THE DATASHEET OF

SMCJ43CA/TR13

Innovative Service Around the Globe YAGEO

DATA SHEET

TRANSIENT VOLTAGE SUPPRESSORS
AC/DC POWER SUPPLY

SMCJ series

RoHS compliant & Halogen free

Product specification– June 30, 2023 V.4



Transient Voltage Suppressors (TVS) Data Sheet

Features



- For surface mounted applications in order to optimize board space
- Low profile package
- Built-in strain relief
- Glass passivated junction
- Low inductance
- Excellent clamping capability
- 1500W peak pulse power capability at 10/1000μs waveform, repetition rate (duty cycle): 0.01%
- Fast response time
- Typical I_R less than 1μA above 10V
- High Temperature soldering: 260℃/10 seconds at terminals
- Plastic package has underwriters laboratory flammability 94V-0
- Meets MSL level 1, per J-STD-020
- Safety certification: UL
- IEC61000-4-2 ESD 30KV Air, 30KV contact compliance

Mechanical Data

- Case: JEDEC DO-214AB. Molded plastic over glass passivated junction
- Terminal: Tin plated, solderable per MIL-STD-750, Method 2026
- Polarity: Color band denotes cathode except bi-directional models
- Standard Packaging: 16mm tape (EIA STD RS-481)
- Weight: 0.26g

Applications

- I/O interface
- AC/DC power supply
- Low frequency signal transmission line (RS232, RS485, etc.)

Maximum Ratings and Characteristics

Ratings at 25℃ ambient temperature unless otherwise specified.

Rating	Symbol	Value	Units
Peak pulse power dissipation at 10/1000μs waveform (Note1, Note2, Fig.1)	P_{PPM}	Minimum 1500	Watts
Peak pulse current of at 10/1000μs waveform (Note 1, Fig.3)	I_{PPM}	See Table	Amps
Steady state power dissipation at T_A=50℃ (Fig.5)	$P_{M(AV)}$	6.5	Watts
Peak forward surge current, 8.3ms single half sine-wave superimposed on rated load, (JEDEC Method) (Note3, Fig.6)	I_{FSM}	200	Amps
Operating junction and Storage Temperature Range.	T_J,T_{STG}	-55 to +150	℃
Typical thermal resistance junction to lead	$R_{\theta JL}$	15	℃/W
Typical thermal resistance junction to ambient	$R_{\theta JA}$	75	℃/W

Notes: 1. Non-repetitive current pulse, per Fig.3 and derated above T_A=25℃ per Fig.2.
2. Mounted on 8.0mm×8.0mm copper pads to each terminal.
3. 8.3ms single half sine-wave, or equivalent square wave, duty cycle=4 pulses per minutes maximum.

Dimensions (SMC/DO-214AB)

Product:

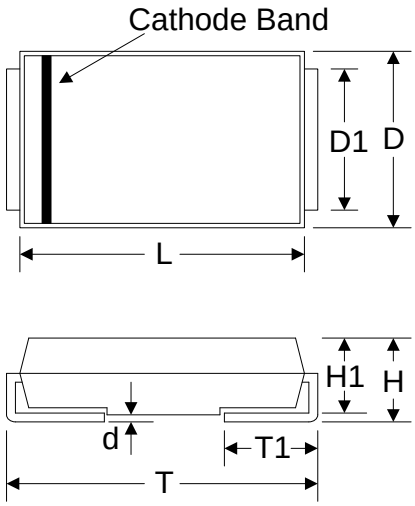

Pad:

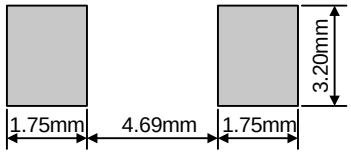

Symbol	Millimeters		Inches	
	Min.	Max.	Min.	Max.
L	6.60	7.11	0.260	0.280
D	5.59	6.22	0.220	0.245
D1	2.90	3.20	0.114	0.126
T	7.75	8.13	0.305	0.320
T1	0.76	1.52	0.030	0.060
d	-	0.203	-	0.008
H	2.20	2.80	0.087	0.110
H1	2.06	2.62	0.079	0.103

Electrical Characteristics (T_A=25℃)

Part Number		Device Marking Code		Reverse Stand-Off Voltage	Breakdown Voltage @I_T	Test Current	Maximum Clamping Voltage @I_{PP}	Peak Pulse Current	Reverse Leakage @V_{RWM}
Unidirectional	Bidirectional	UNI	BI	V_{RWM}(V)	V_{BR}(V)	I_T(mA)	V_C(V)	I_{PP}(A)	I_R(μA)
SMCJ5.0A	SMCJ5.0CA	GDE	BDE	5.0	6.40~7.00	10	9.2	163.0	800
SMCJ6.0A	SMCJ6.0CA	GDG	BDG	6.0	6.67~7.37	10	10.3	145.7	800
SMCJ6.5A	SMCJ6.5CA	GDK	BDK	6.5	7.22~7.98	10	11.2	134.0	500
SMCJ7.0A	SMCJ7.0CA	GDM	BDM	7.0	7.78~8.60	10	12.0	125.0	200
SMCJ7.5A	SMCJ7.5CA	GDP	BDP	7.5	8.33~9.21	1	12.9	116.3	100
SMCJ8.0A	SMCJ8.0CA	GDR	BDR	8.0	8.89~9.83	1	13.6	110.3	50
SMCJ8.5A	SMCJ8.5CA	GDT	BDT	8.5	9.44~10.40	1	14.4	104.2	20
SMCJ9.0A	SMCJ9.0CA	GDV	BDV	9.0	10.00~11.10	1	15.4	97.4	10
SMCJ10A	SMCJ10CA	GDX	BDX	10.0	11.10~12.30	1	17.0	88.3	5
SMCJ11A	SMCJ11CA	GDZ	BDZ	11.0	12.20~13.50	1	18.2	82.5	1
SMCJ12A	SMCJ12CA	GEE	BEE	12.0	13.30~14.70	1	19.9	75.4	1
SMCJ13A	SMCJ13CA	GEG	BEG	13.0	14.40~15.90	1	21.5	69.8	1
SMCJ14A	SMCJ14CA	GEK	BEK	14.0	15.60~17.20	1	23.2	64.7	1
SMCJ15A	SMCJ15CA	GEM	BEM	15.0	16.70~18.50	1	24.4	61.5	1
SMCJ16A	SMCJ16CA	GEP	BEP	16.0	17.80~19.70	1	26.0	57.7	1
SMCJ17A	SMCJ17CA	GER	BER	17.0	18.90~20.90	1	27.6	54.4	1
SMCJ18A	SMCJ18CA	GET	BET	18.0	20.00~22.10	1	29.2	51.4	1
SMCJ20A	SMCJ20CA	GEV	BEV	20.0	22.20~24.50	1	32.4	46.3	1

Electrical Characteristics (T_A=25℃)

Part Number		Device Marking Code		Reverse Stand-Off Voltage	Breakdown Voltage @I_T	Test Current	Maximum Clamping Voltage @I_{PP}	Peak Pulse Current	Reverse Leakage @V_{RWM}
Unidirectional	Bidirectional	UNI	BI	V_{RWM}(V)	V_{BR}(V)	I_T(mA)	V_C(V)	I_{PP}(A)	I_R(μA)
SMCJ22A	SMCJ22CA	GEX	BEX	22.0	24.40~26.90	1	35.5	42.3	1
SMCJ24A	SMCJ24CA	GEZ	BEZ	24.0	26.70~29.50	1	38.9	38.6	1
SMCJ26A	SMCJ26CA	GFE	BFE	26.0	28.90~31.90	1	42.1	35.7	1
SMCJ28A	SMCJ28CA	GFG	BFG	28.0	31.10~34.40	1	45.4	33.1	1
SMCJ30A	SMCJ30CA	GFK	BFK	30.0	33.30~36.80	1	48.4	31.0	1
SMCJ33A	SMCJ33CA	GFM	BFM	33.0	36.70~40.60	1	53.3	28.2	1
SMCJ36A	SMCJ36CA	GFP	BFP	36.0	40.00~44.20	1	58.1	25.9	1
SMCJ40A	SMCJ40CA	GFR	BFR	40.0	44.40~49.10	1	64.5	23.3	1
SMCJ43A	SMCJ43CA	GFT	BFT	43.0	47.80~52.80	1	69.4	21.7	1
SMCJ45A	SMCJ45CA	GFV	BFV	45.0	50.00~55.30	1	72.7	20.6	1
SMCJ48A	SMCJ48CA	GFX	BFX	48.0	53.30~58.90	1	77.4	19.4	1
SMCJ51A	SMCJ51CA	GFZ	BFZ	51.0	56.70~62.70	1	82.4	18.2	1
SMCJ54A	SMCJ54CA	GGE	BGE	54.0	60.00~66.30	1	87.1	17.3	1
SMCJ58A	SMCJ58CA	GGG	BGG	58.0	64.40~71.20	1	93.6	16.1	1
SMCJ60A	SMCJ60CA	GGK	BGK	60.0	66.70~73.70	1	96.8	15.5	1
SMCJ64A	SMCJ64CA	GGM	BGM	64.0	71.10~78.60	1	103.0	14.6	1
SMCJ70A	SMCJ70CA	GGP	BGP	70.0	77.80~86.00	1	113.0	13.3	1
SMCJ75A	SMCJ75CA	GGR	BGR	75.0	83.30~92.10	1	121.0	12.4	1
SMCJ78A	SMCJ78CA	GGT	BGT	78.0	86.70~95.80	1	126.0	11.9	1
SMCJ85A	SMCJ85CA	GGV	BGV	85.0	94.40~104.00	1	137.0	11.0	1
SMCJ90A	SMCJ90CA	GGX	BGX	90.0	100.00~111.00	1	146.0	10.3	1
SMCJ100A	SMCJ100CA	GGZ	BGZ	100.0	111.00~123.00	1	162.0	9.3	1
SMCJ110A	SMCJ110CA	GHE	BHE	110.0	122.00~135.00	1	177.0	8.5	1
SMCJ120A	SMCJ120CA	GHG	BHG	120.0	133.00~147.00	1	193.0	7.8	1
SMCJ130A	SMCJ130CA	GHK	BHK	130.0	144.00~159.00	1	209.0	7.2	1
SMCJ150A	SMCJ150CA	GHM	BHM	150.0	167.00~185.00	1	243.0	6.2	1
SMCJ160A	SMCJ160CA	GHP	BHP	160.0	178.00~197.00	1	259.0	5.8	1
SMCJ170A	SMCJ170CA	GHR	BHR	170.0	189.00~209.00	1	275.0	5.5	1
SMCJ180A	SMCJ180CA	GHT	BHT	180.0	201.00~222.00	1	292.0	5.1	1
SMCJ190A	SMCJ190CA	GHU	BHU	190.0	211.00~233.00	1	308.0	4.8	1
SMCJ200A	SMCJ200CA	GHV	BHV	200.0	224.00~247.00	1	324.0	4.6	1
SMCJ210A	SMCJ210CA	GHW	BHW	210.0	237.00~263.00	1	340.0	4.4	1
SMCJ220A	SMCJ220CA	GHX	BHX	220.0	246.00~272.00	1	356.0	4.2	1
SMCJ250A	SMCJ250CA	GHZ	BHZ	250.0	279.00~309.00	1	405.0	3.7	1
SMCJ300A	SMCJ300CA	GJE	BJE	300.0	335.00~371.00	1	486.0	3.1	1
SMCJ350A	SMCJ350CA	GJG	BJG	350.0	391.00~432.00	1	567.0	2.6	1
SMCJ400A	SMCJ400CA	GJK	BJK	400.0	447.00~494.00	1	648.0	2.3	1
SMCJ440A	SMCJ440CA	GJM	BJM	440.0	492.00~543.00	1	713.0	2.1	1

Ratings and Characteristic Curves (T_A=25℃ unless otherwise noted)

Figure 1. Peak Pulse Power Rating Curve

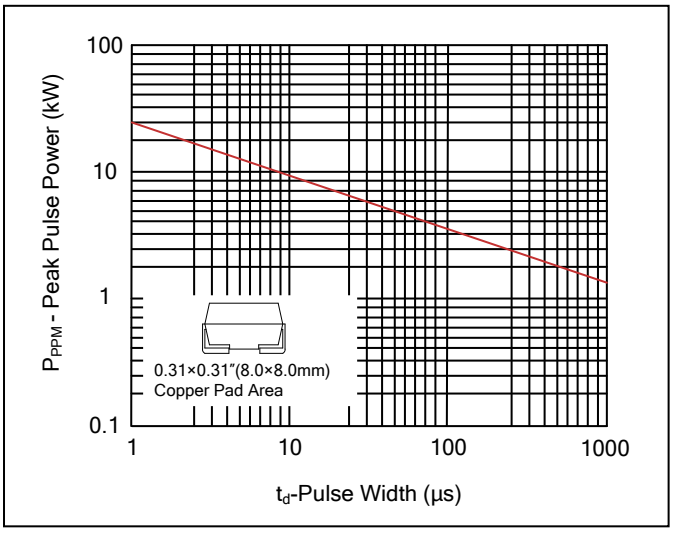

Figure 2. Pulse Derating Curve

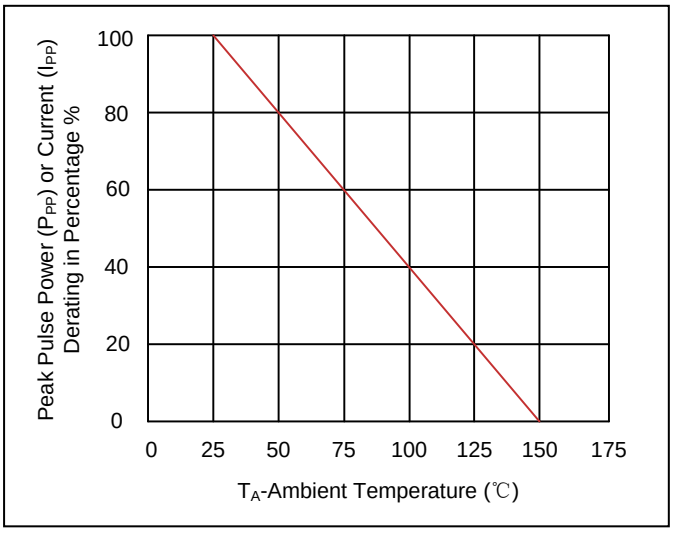

Figure 3. Pulse Waveform

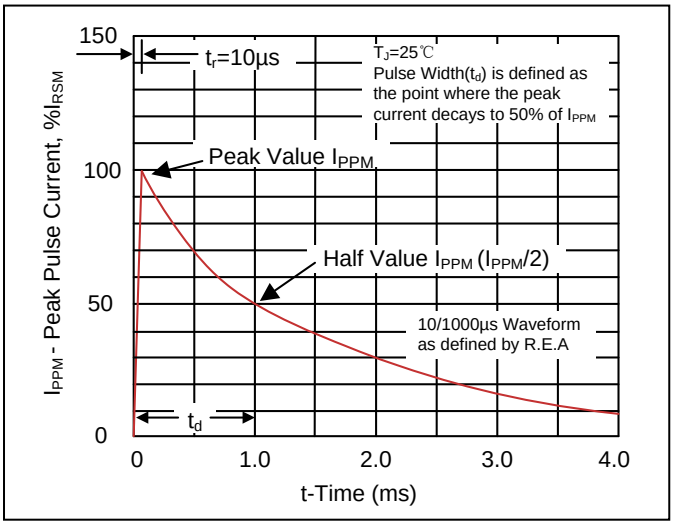

Figure 4. Typical Junction Capacitance

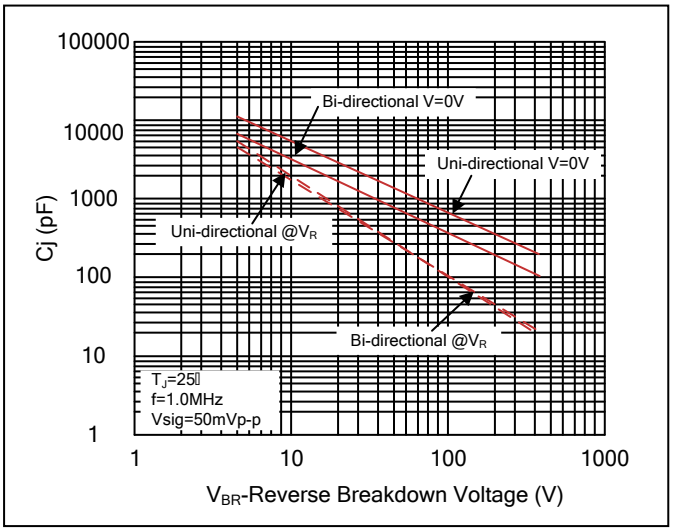

Figure 5. Steady State Power Dissipation Derating Curve

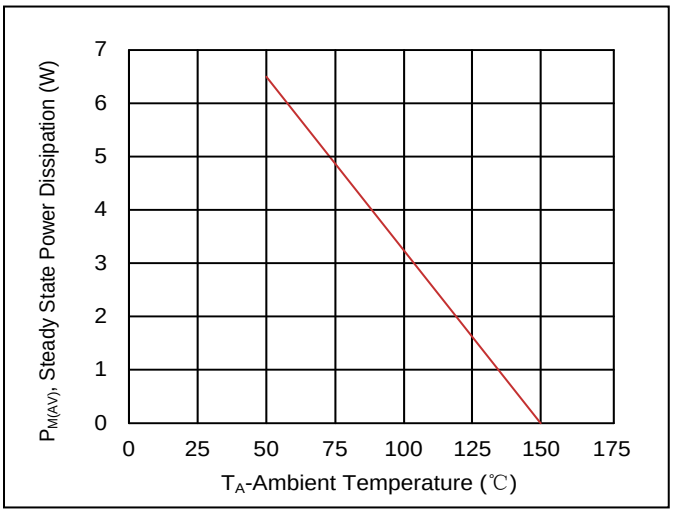

Figure 6. Maximum Non-Repetitive Forward Surge Current Uni-Directional Only

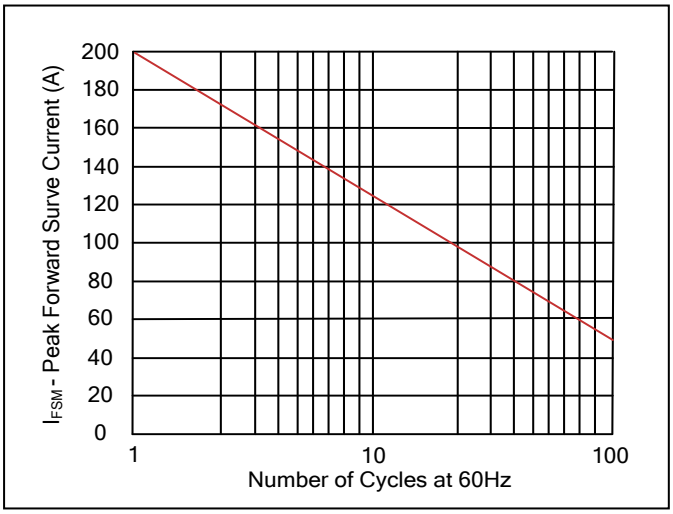

Recommended Soldering Conditions

Reflow Soldering

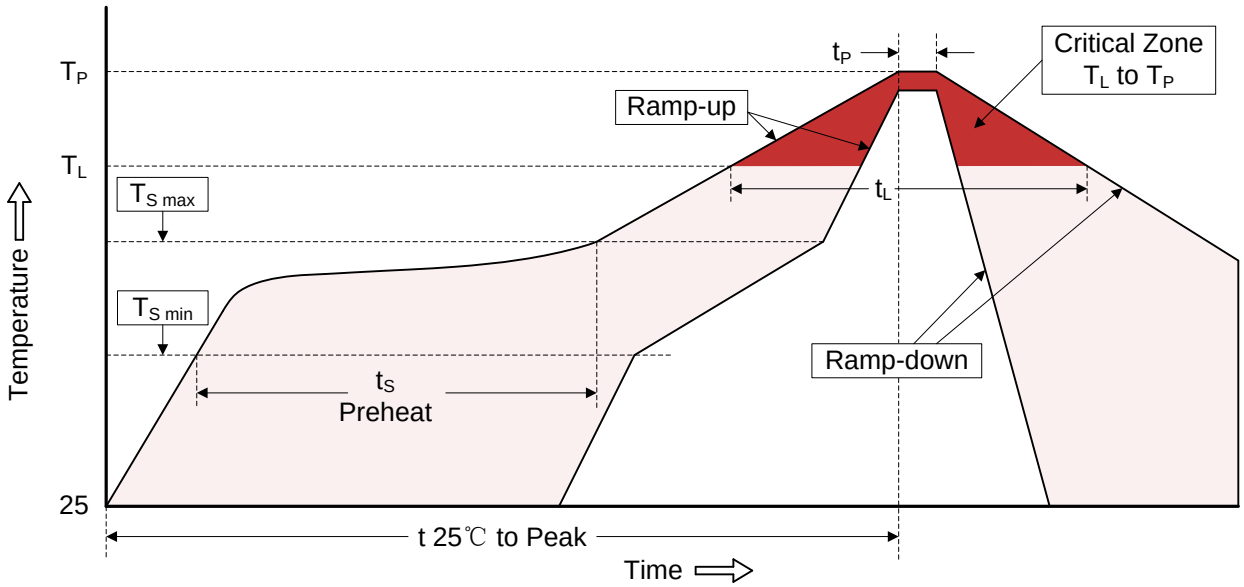

Recommended Conditions

Profile Feature	Pb-Free Assembly
Average ramp-up rate (T_L to T_P)	3℃/second max.
Preheat -Temperature Min ($T_{S\,min}$) -Temperature Max ($T_{S\,max}$) -Time (min to max) (t_S)	 150℃ 200℃ 60-180 seconds
$T_{S\,max}$ to T_L -Ramp-up Rate	 3℃/second max.
Time maintained above: -Temperature (T_L) -Time (t_L)	 217℃ 60-150 seconds
Peak Temperature (T_P)	260℃
Time within 5℃ of actual Peak Temperature (t_P)	20-40 seconds
Ramp-down Rate	6℃/second max.
Time 25℃ to Peak Temperature	8 minutes max.

Marking Code

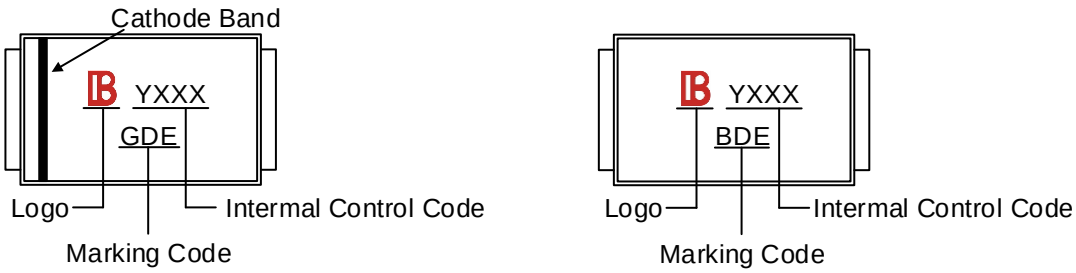

Part Number Code

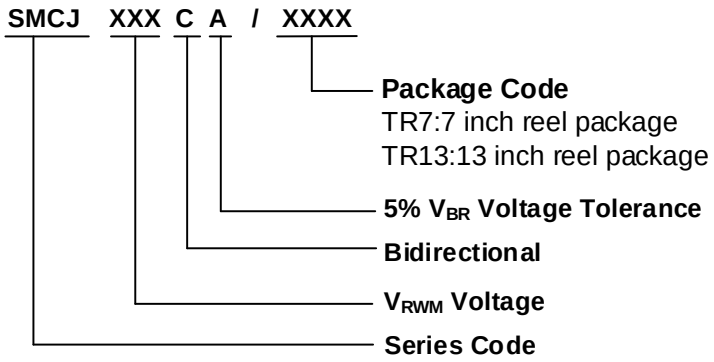

Ordering Code for Different Package

7 inch reel package: Add suffix " /TR7 " at the end of the part number, such as SMCJXXXCA/TR7
13 inch reel package: Add suffix " /TR13 " at the end of the part number, such as SMCJXXXCA/TR13

Packaging

Tape

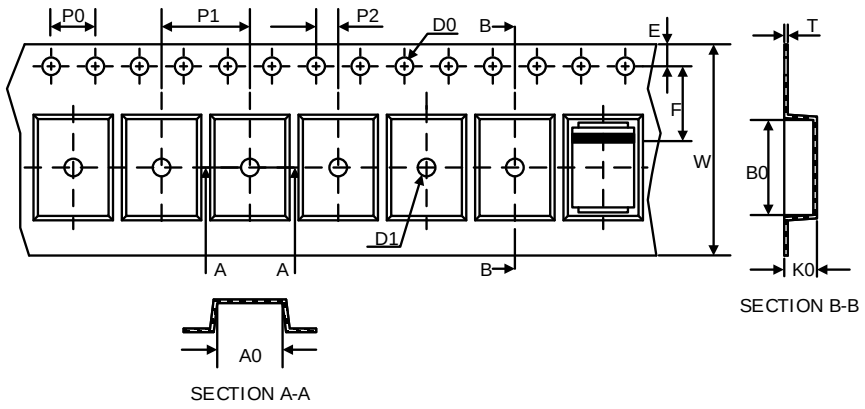

Symbol	Dimension (mm)
W	16.00±0.20
P0	4.00±0.10
P1	8.00±0.10
P2	2.00±0.10
D0	Φ1.5±0.10
D1	Φ1.5±0.10
E	1.75±0.10
F	7.50±0.10
A0	6.27±0.10
B0	8.30±0.10
K0	3.15±0.15
T	0.30±0.05

7” Reel

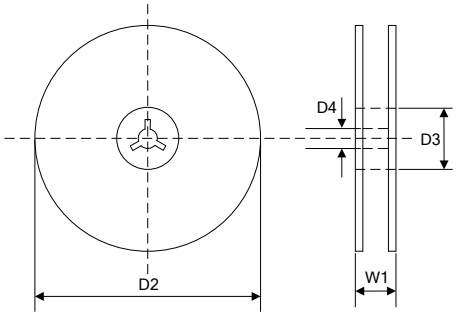

D2	Φ178.0±2.0
D3	Φ50.0Min.
D4	Φ13.0±0.5
W1	20.0±2.0
Quantity: 500PCS	

13” Reel

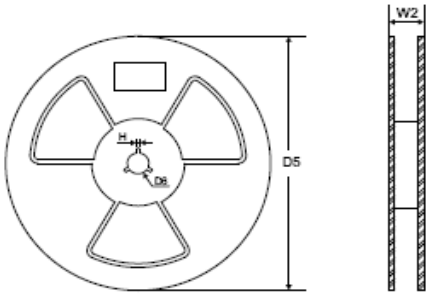

D5	Φ330.0±2.0
D6	Φ13.5±0.5
H	2.5±1.0
W2	20.0±2.0
Quantity: 3000PCS	

LEGAL DISCLAIMER

YAGEO, its distributors and agents (collectively, "YAGEO"), hereby disclaims any and all liabilities for any errors, inaccuracies or incompleteness contained in any product related information, including but not limited to product specifications, datasheets, pictures and/or graphics. YAGEO may make changes, modifications and/or improvements to product related information at any time and without notice.

YAGEO makes no representation, warranty, and/or guarantee about the fitness of its products for any particular purpose or the continuing production of any of its products. To the maximum extent permitted by law, YAGEO disclaims (i) any and all liability arising out of the application or use of any YAGEO product, (ii) any and all liability, including without limitation special, consequential or incidental damages, and (iii) any and all implied warranties, including warranties of fitness for a particular purpose, non -infringement and merchantability.

YAGEO products are designed for general purpose applications under normal operation and usage conditions. Please contact YAGEO for the applications listed below which require especially high reliability for the prevention of defects which might directly cause damage to the third party's life, body or property: Aerospace equipment (artificial satellite, rocket, etc.), Atomic energy-related equipment, Aviation equipment, Disaster prevention equipment, crime prevention equipment, Electric heating apparatus, burning equipment, Highly public information network equipment, data-processing equipment , Medical devices, Military equipment, Power generation control equipment, Safety equipment, Traffic signal equipment, Transportation equipment and Undersea equipment, or for any other application or use in which the failure of YAGEO products could result in personal injury or death, or serious property damage. Particularly **YAGEO Corporation and its affiliates do not recommend the use of commercial or automotive grade products for high reliability applications or manned space flight.**

Information provided here is intended to indicate product specifications only. YAGEO reserves all the rights for revising this content without further notification, as long as products are unchanged. Any product change will be announced by PCN.

Looking for pricing, stock, or lifecycle information?

Click below to explore more details on WIN SOURCE:

- View SMCJ43CA/TR13 on WIN SOURCE
- Yageo Information

Optimize Your Supply Chain with WIN SOURCE Solutions

- Global Sourcing Solution
- Obsolete Management
- Cost Control Management
- Shortage Management
- Alternative Solution
- Excess Inventory Management