THE DATASHEET OF

SMCJ58A-E3/57T

www.win-source.net 0086-755-83957316

Surface Mount TRANSZORB® Transient Voltage Suppressors



SMC (DO-214AB)

FEATURES

- Low profile package
- Ideal for automated placement
- Glass passivated chip junction
- Available in uni-directional and bi-directional
- Excellent clamping capability
- Very fast response time
- Low incremental surge resistance
- Meets MSL level 1, per J-STD-020, LF maximum peak of 260 °C
- AEC-Q101 qualified available
  - Automotive ordering code: base P/NHE3 or P/NHM3
- Material categorization: for definitions of compliance please see www.vishay.com/doc?99912

RoHS COMPLIANT

HALOGEN FREE Available

PRIMARY CHARACTERISTICS	
V_{BR} uni-directional	6.40 V to 231 V
V_{BR} bi-directional	6.40 V to 231 V
V_{WM}	5.0 V to 188 V
P_{PPM}	1500 W
P_D	6.5 W
I_{FSM} (uni-directional only)	200 A
T_J max.	150 °C
Polarity	Uni-directional, bi-directional
Package	SMC (DO-214AB)

DEVICES FOR BI-DIRECTION APPLICATIONS

For bi-directional devices use CA suffix (e.g. SMCJ188CA). Electrical characteristics apply in both directions.

TYPICAL APPLICATIONS

Use in sensitive electronics protection against voltage transients induced by inductive load switching and lighting on ICs, MOSFET, signal lines of sensor units for consumer, computer, industrial, automotive, and telecommunication.

MECHANICAL DATA

Case: SMC (DO-214AB)
Molding compound meets UL 94 V-0 flammability rating
Base P/N-E3 - RoHS-compliant, commercial grade
Base P/N-M3 - halogen-free, RoHS-compliant, commercial grade
Base P/NHE3_X - RoHS-compliant and AEC-Q101 qualified
Base P/NHM3_X - halogen-free, RoHS-compliant, and AEC-Q101 qualified
("_X" denotes revision code e.g. A, B, ...)

Terminals: matte tin plated leads, solderable per J-STD-002 and JESD 22-B102
E3, M3, HE3, and HM3 suffix meets JESD 201 class 2 whisker test

Polarity: for uni-directional types the band denotes cathode end, no marking on bi-directional types

MAXIMUM RATINGS (T_A = 25 °C unless otherwise noted)			
PARAMETER	**SYMBOL**	**VALUE**	**UNIT**
Peak pulse power dissipation with a 10/1000 µs waveform (1)(2)	P_{PPM}	1500	W
Peak pulse current with a 10/1000 µs waveform (1)	I_{PPM}	See next table	A
Peak forward surge current 8.3 ms single half sine-wave uni-directional only (2)	I_{FSM}	200	A
Power dissipation on infinite heatsink, T_A = 50 °C	P_D	6.5	W
Operating junction and storage temperature range	T_J, T_{STG}	-55 to +150	°C

Notes

(1) Non-repetitive current pulse, per fig. 3 and derated above T_A = 25 °C per fig. 2

(2) Mounted on 0.31" x 0.31" (8.0 mm x 8.0 mm) copper pads to each terminal

For technical questions within your region: DiodesAmericas@vishay.com, DiodesAsia@vishay.com, DiodesEurope@vishay.com

THIS DOCUMENT IS SUBJECT TO CHANGE WITHOUT NOTICE. THE PRODUCTS DESCRIBED HEREIN AND THIS DOCUMENT ARE SUBJECT TO SPECIFIC DISCLAIMERS, SET FORTH AT www.vishay.com/doc?91000

ELECTRICAL CHARACTERISTICS (T_A = 25 °C unless otherwise noted)

DEVICE TYPE MODIFIED "J" BEND LEAD	DEVICE MARKING CODE		BREAKDOWN VOLTAGE V_{BR} AT I_T (1) (V)		TEST CURRENT I_T (mA)	STAND-OFF VOLTAGE V_{WM} (V)	MAXIMUM REVERSE LEAKAGE AT V_{WM} I_D (µA) (3)	MAXIMUM PEAK PULSE SURGE CURRENT I_{PPM} (A) (2)	MAXIMUM CLAMPING VOLTAGE AT I_{PPM} V_C (V)
	UNI	BI	MIN.	MAX.					
(+)SMCJ5.0A (5)	GDE	GDE	6.40	7.07	10	5.0	1000	163.0	9.2
(+)SMCJ6.0A	GDG	GDG	6.67	7.37	10	6.0	1000	145.6	10.3
(+)SMCJ6.5A	GDK	BDK	7.22	7.98	10	6.5	500	133.9	11.2
(+)SMCJ7.0A	GDM	GDM	7.78	8.60	10	7.0	200	125.0	12.0
(+)SMCJ7.5A	GDP	BDP	8.33	9.21	1.0	7.5	100	116.3	12.9
(+)SMCJ8.0A	GDR	BDR	8.89	9.83	1.0	8.0	50	110.3	13.6
(+)SMCJ8.5A	GDT	BDT	9.44	10.4	1.0	8.5	20	104.2	14.4
(+)SMCJ9.0A	GDV	BDV	10.0	11.1	1.0	9.0	10	97.4	15.4
(+)SMCJ10A	GDX	BDX	11.1	12.3	1.0	10	5.0	88.2	17.0
(+)SMCJ11A	GDZ	GDZ	12.2	13.5	1.0	11	5.0	82.4	18.2
(+)SMCJ12A	GEE	BEE	13.3	14.7	1.0	12	5.0	75.4	19.9
(+)SMCJ13A	GEG	GEG	14.4	15.9	1.0	13	1.0	69.8	21.5
(+)SMCJ14A	GEK	BEK	15.6	17.2	1.0	14	1.0	64.7	23.2
(+)SMCJ15A	GEM	BEM	16.7	18.5	1.0	15	1.0	61.5	24.4
(+)SMCJ16A	GEP	GEP	17.8	19.7	1.0	16	1.0	57.7	26.0
(+)SMCJ17A	GER	GER	18.9	20.9	1.0	17	1.0	54.3	27.6
(+)SMCJ18A	GET	BET	20.0	22.1	1.0	18	1.0	51.4	29.2
(+)SMCJ20A	GEV	BEV	22.2	24.5	1.0	20	1.0	46.3	32.4
(+)SMCJ22A	GEX	BEX	24.4	26.9	1.0	22	1.0	42.3	35.5
(+)SMCJ24A	GEZ	BEZ	26.7	29.5	1.0	24	1.0	38.6	38.9
(+)SMCJ26A	GFE	BFE	28.9	31.9	1.0	26	1.0	35.6	42.1
(+)SMCJ28A	GFG	BFG	31.1	34.4	1.0	28	1.0	33.0	45.4
(+)SMCJ30A	GFK	BFK	33.3	36.8	1.0	30	1.0	31.0	48.4
(+)SMCJ33A	GFM	BFM	36.7	40.6	1.0	33	1.0	28.1	53.3
(+)SMCJ36A	GFP	BFP	40.0	44.2	1.0	36	1.0	25.8	58.1
(+)SMCJ40A	GFR	BFR	44.4	49.1	1.0	40	1.0	23.3	64.5
(+)SMCJ43A	GFT	BFT	47.8	52.8	1.0	43	1.0	21.6	69.4
(+)SMCJ45A	GFV	GFV	50.0	55.3	1.0	45	1.0	20.6	72.7
(+)SMCJ48A	GFX	GFX	53.3	58.9	1.0	48	1.0	19.4	77.4
(+)SMCJ51A	GFZ	GFZ	56.7	62.7	1.0	51	1.0	18.2	82.4
(+)SMCJ54A	GGE	GGE	60.0	66.3	1.0	54	1.0	17.2	87.1
(+)SMCJ58A	GGG	GGG	64.4	71.2	1.0	58	1.0	16.0	93.6
(+)SMCJ60A	GGK	GGK	66.7	73.7	1.0	60	1.0	15.5	96.8
(+)SMCJ64A	GGM	GGM	71.1	78.6	1.0	64	1.0	14.6	103
(+)SMCJ70A	GGP	GGP	77.8	86.0	1.0	70	1.0	13.3	113
(+)SMCJ75A	GGR	GGR	83.3	92.1	1.0	75	1.0	12.4	121
(+)SMCJ78A	GGT	GGT	86.7	95.8	1.0	78	1.0	11.9	126
(+)SMCJ85A	GGV	GGV	94.4	104	1.0	85	1.0	10.9	137
(+)SMCJ90A	GGX	GGX	100	111	1.0	90	1.0	10.3	146
(+)SMCJ100A	GGZ	GGZ	111	123	1.0	100	1.0	9.3	162
(+)SMCJ110A	GHE	GHE	122	135	1.0	110	1.0	8.5	177
(+)SMCJ120A	GHG	GHG	133	147	1.0	120	1.0	7.8	193
(+)SMCJ130A	GHK	GHK	144	159	1.0	130	1.0	7.2	209
(+)SMCJ150A	GHM	GHM	167	185	1.0	150	1.0	6.2	243
(+)SMCJ160A	GHP	GHP	178	197	1.0	160	1.0	5.8	259
(+)SMCJ170A	GHR	GHR	189	209	1.0	170	1.0	5.5	275
SMCJ188A	GHS	GHS	209	231	1.0	188	1.0	4.6	328

Notes

(1) Pulse test: $t_p \leq 50$ ms

(2) Surge current waveform per fig. 3 and derate per fig. 2

(3) For bi-directional types having V_{WM} of 10 V and less, the I_D limit is doubled

(4) All terms and symbols are consistent with ANSI/IEEE C62.35

(5) For the bi-directional SMCJ5.0CA, the maximum V_{BR} is 7.25 V

(6) V_F = 3.5 V at I_F = 100 A (uni-directional only)

(+) Underwriters laboratory recognition for the classification of protectors (QVGQ2) under the UL standard for safety 497B and file number E136766 for both uni-directional and bi-directional devices

For technical questions within your region: DiodesAmericas@vishay.com, DiodesAsia@vishay.com, DiodesEurope@vishay.com
THIS DOCUMENT IS SUBJECT TO CHANGE WITHOUT NOTICE. THE PRODUCTS DESCRIBED HEREIN AND THIS DOCUMENT ARE SUBJECT TO SPECIFIC DISCLAIMERS, SET FORTH AT www.vishay.com/doc?91000

THERMAL CHARACTERISTICS (T_A = 25 °C unless otherwise noted)			
PARAMETER	**SYMBOL**	**VALUE**	**UNIT**
Typical thermal resistance, junction to ambient air (1)	$R_{\theta JA}$	75	°C/ W
Typical thermal resistance, junction to lead	$R_{\theta JL}$	15	

Note

(1) Mounted on minimum recommended pad layout

ORDERING INFORMATION (Example)				
PREFERRED P/N	**UNIT WEIGHT (g)**	**PREFERRED PACKAGE CODE**	**BASE QUANTITY**	**DELIVERY MODE**
SMCJ5.0A-E3/57T	0.211	57T	850	7" diameter plastic tape and reel
SMCJ5.0A-M3/57T				
SMCJ5.0A-E3/9AT	0.211	9AT	3500	13" diameter plastic tape and reel
SMCJ5.0A-M3/9AT				
SMCJ5.0AHE3_A/H (1)	0.211	H	850	7" diameter plastic tape and reel
SMCJ5.0AHM3_A/H (1)				
SMCJ5.0AHE3_A/I (1)	0.211	I	3500	13" diameter plastic tape and reel
SMCJ5.0AHM3_A/I (1)				

Note

(1) AEC-Q101 qualified

RATINGS AND CHARACTERISTICS CURVES (T_A = 25 °C unless otherwise noted)

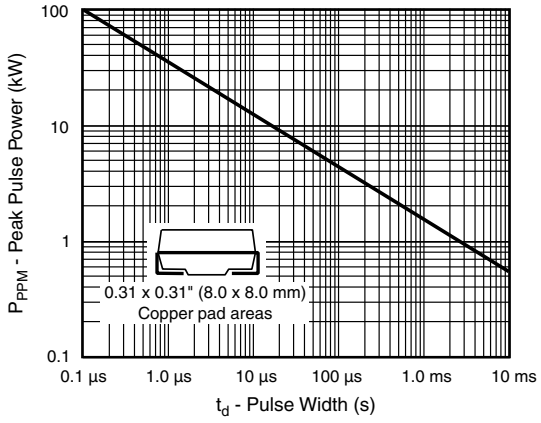

Fig. 1 - Peak Pulse Power Rating Curve

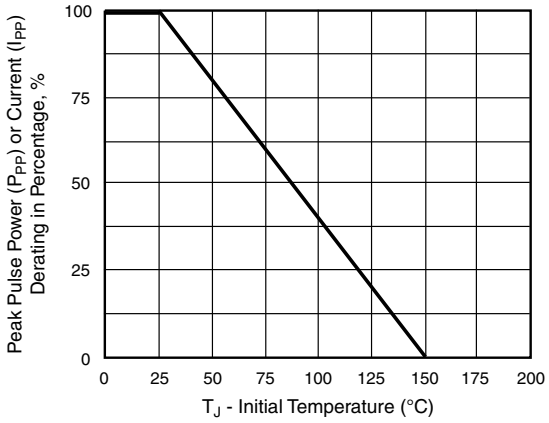

Fig. 2 - Pulse Power or Current vs. Initial Junction Temperature

For technical questions within your region: DiodesAmericas@vishay.com, DiodesAsia@vishay.com, DiodesEurope@vishay.com

THIS DOCUMENT IS SUBJECT TO CHANGE WITHOUT NOTICE. THE PRODUCTS DESCRIBED HEREIN AND THIS DOCUMENT ARE SUBJECT TO SPECIFIC DISCLAIMERS, SET FORTH AT www.vishay.com/doc?91000

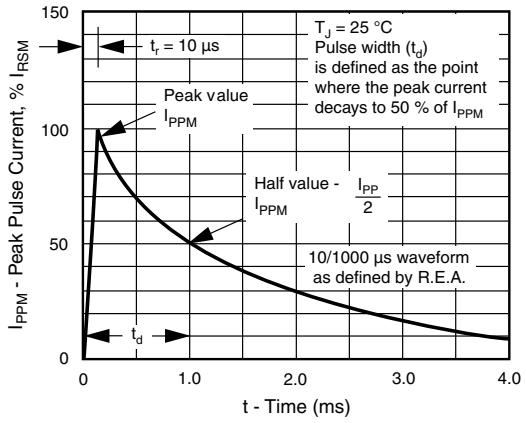

Fig. 3 - Pulse Waveform

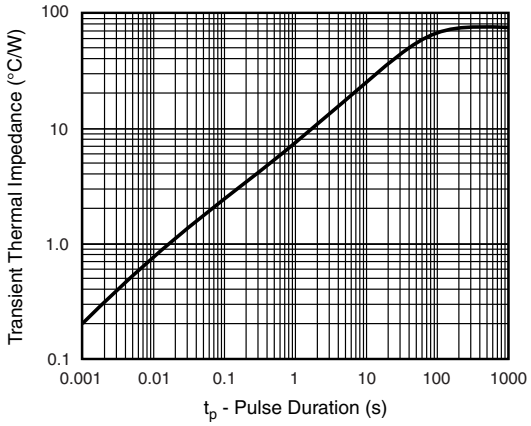

Fig. 5 - Typical Transient Thermal Impedance

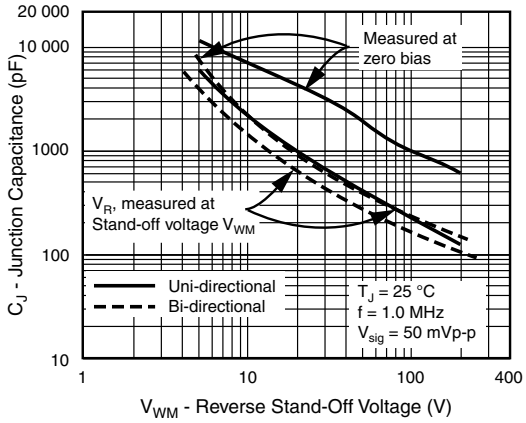

Fig. 4 - Typical Junction Capacitance Uni-Directional

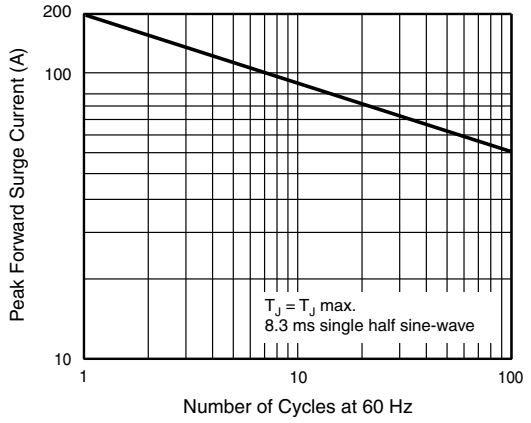

Fig. 6 - Maximum Non-Repetitive Peak Forward Surge Current
Uni-Directional Use On

PACKAGE OUTLINE DIMENSIONS in inches (millimeters)

SMC (DO-214AB)

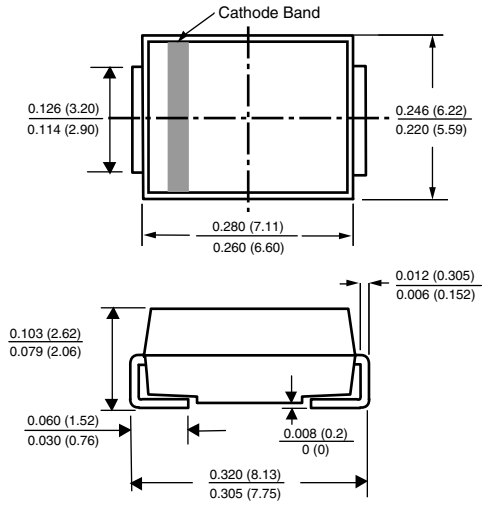

Mounting Pad Layout

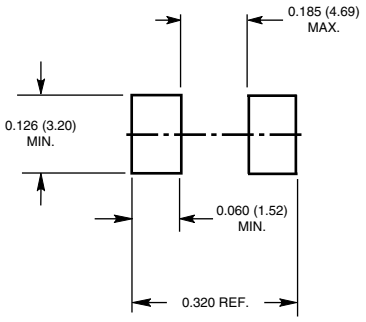

For technical questions within your region: DiodesAmericas@vishay.com, DiodesAsia@vishay.com, DiodesEurope@vishay.com
THIS DOCUMENT IS SUBJECT TO CHANGE WITHOUT NOTICE. THE PRODUCTS DESCRIBED HEREIN AND THIS DOCUMENT ARE SUBJECT TO SPECIFIC DISCLAIMERS, SET FORTH AT www.vishay.com/doc?91000

Disclaimer

ALL PRODUCT, PRODUCT SPECIFICATIONS AND DATA ARE SUBJECT TO CHANGE WITHOUT NOTICE TO IMPROVE RELIABILITY, FUNCTION OR DESIGN OR OTHERWISE.

Vishay Intertechnology, Inc., its affiliates, agents, and employees, and all persons acting on its or their behalf (collectively, “Vishay”), disclaim any and all liability for any errors, inaccuracies or incompleteness contained in any datasheet or in any other disclosure relating to any product.

Vishay makes no warranty, representation or guarantee regarding the suitability of the products for any particular purpose or the continuing production of any product. To the maximum extent permitted by applicable law, Vishay disclaims (i) any and all liability arising out of the application or use of any product, (ii) any and all liability, including without limitation special, consequential or incidental damages, and (iii) any and all implied warranties, including warranties of fitness for particular purpose, non-infringement and merchantability.

Statements regarding the suitability of products for certain types of applications are based on Vishay’s knowledge of typical requirements that are often placed on Vishay products in generic applications. Such statements are not binding statements about the suitability of products for a particular application. It is the customer’s responsibility to validate that a particular product with the properties described in the product specification is suitable for use in a particular application. Parameters provided in datasheets and / or specifications may vary in different applications and performance may vary over time. All operating parameters, including typical parameters, must be validated for each customer application by the customer’s technical experts. Product specifications do not expand or otherwise modify Vishay’s terms and conditions of purchase, including but not limited to the warranty expressed therein.

Except as expressly indicated in writing, Vishay products are not designed for use in medical, life-saving, or life-sustaining applications or for any other application in which the failure of the Vishay product could result in personal injury or death. Customers using or selling Vishay products not expressly indicated for use in such applications do so at their own risk. Please contact authorized Vishay personnel to obtain written terms and conditions regarding products designed for such applications.

No license, express or implied, by estoppel or otherwise, to any intellectual property rights is granted by this document or by any conduct of Vishay. Product names and markings noted herein may be trademarks of their respective owners.

© 2019 VISHAY INTERTECHNOLOGY, INC. ALL RIGHTS RESERVED

Looking for pricing, stock, or lifecycle information?

Click below to explore more details on WIN SOURCE:

- View SMCJ58A-E3/57T on WIN SOURCE
- Vishay Information

Optimize Your Supply Chain with WIN SOURCE Solutions

- Global Sourcing Solution
- Obsolete Management
- Cost Control Management
- Shortage Management
- Alternative Solution
- Excess Inventory Management