# THE DATASHEET OF

# SMCJ15CA-E3/9AT

www.win-source.net 0086-755-83957316

# Surface Mount TRANSZORB® Transient Voltage Suppressors



SMC (DO-214AB)

## FEATURES

- Low profile package
- Ideal for automated placement
- Glass passivated chip junction
- Available in uni-directional and bi-directional
- Excellent clamping capability
- Very fast response time
- Low incremental surge resistance
- Meets MSL level 1, per J-STD-020, LF maximum peak of 260 °C
- AEC-Q101 qualified available
  - Automotive ordering code: base P/NHE3 or P/NHM3
- Material categorization: for definitions of compliance please see www.vishay.com/doc?99912

RoHS COMPLIANT

HALOGEN FREE Available

| PRIMARY CHARACTERISTICS | |
|---|---|
| $V_{BR}$ uni-directional | 6.40 V to 231 V |
| $V_{BR}$ bi-directional | 6.40 V to 231 V |
| $V_{WM}$ | 5.0 V to 188 V |
| $P_{PPM}$ | 1500 W |
| $P_D$ | 6.5 W |
| $I_{FSM}$ (uni-directional only) | 200 A |
| $T_J$ max. | 150 °C |
| Polarity | Uni-directional, bi-directional |
| Package | SMC (DO-214AB) |

## DEVICES FOR BI-DIRECTION APPLICATIONS

For bi-directional devices use CA suffix (e.g. SMCJ188CA). Electrical characteristics apply in both directions.

## TYPICAL APPLICATIONS

Use in sensitive electronics protection against voltage transients induced by inductive load switching and lighting on ICs, MOSFET, signal lines of sensor units for consumer, computer, industrial, automotive, and telecommunication.

## MECHANICAL DATA

**Case:** SMC (DO-214AB)
Molding compound meets UL 94 V-0 flammability rating
Base P/N-E3 - RoHS-compliant, commercial grade
Base P/N-M3 - halogen-free, RoHS-compliant, commercial grade
Base P/NHE3_X - RoHS-compliant and AEC-Q101 qualified
Base P/NHM3_X - halogen-free, RoHS-compliant, and AEC-Q101 qualified
("_X" denotes revision code e.g. A, B, ...)

**Terminals:** matte tin plated leads, solderable per J-STD-002 and JESD 22-B102
E3, M3, HE3, and HM3 suffix meets JESD 201 class 2 whisker test

**Polarity:** for uni-directional types the band denotes cathode end, no marking on bi-directional types

| MAXIMUM RATINGS ($T_A$ = 25 °C unless otherwise noted) | | | |
|---|---|---|---|
| **PARAMETER** | **SYMBOL** | **VALUE** | **UNIT** |
| Peak pulse power dissipation with a 10/1000 µs waveform (1)(2) | $P_{PPM}$ | 1500 | W |
| Peak pulse current with a 10/1000 µs waveform (1) | $I_{PPM}$ | See next table | A |
| Peak forward surge current 8.3 ms single half sine-wave uni-directional only (2) | $I_{FSM}$ | 200 | A |
| Power dissipation on infinite heatsink, $T_A$ = 50 °C | $P_D$ | 6.5 | W |
| Operating junction and storage temperature range | $T_J$, $T_{STG}$ | -55 to +150 | °C |

**Notes**

(1) Non-repetitive current pulse, per fig. 3 and derated above $T_A$ = 25 °C per fig. 2

(2) Mounted on 0.31" x 0.31" (8.0 mm x 8.0 mm) copper pads to each terminal



For technical questions within your region: DiodesAmericas@vishay.com, DiodesAsia@vishay.com, DiodesEurope@vishay.com

THIS DOCUMENT IS SUBJECT TO CHANGE WITHOUT NOTICE. THE PRODUCTS DESCRIBED HEREIN AND THIS DOCUMENT ARE SUBJECT TO SPECIFIC DISCLAIMERS, SET FORTH AT www.vishay.com/doc?91000

**ELECTRICAL CHARACTERISTICS** ($T_A$ = 25 °C unless otherwise noted)

| DEVICE TYPE MODIFIED "J" BEND LEAD | DEVICE MARKING CODE | | BREAKDOWN VOLTAGE $V_{BR}$ AT $I_T$ (1) (V) | | TEST CURRENT $I_T$ (mA) | STAND-OFF VOLTAGE $V_{WM}$ (V) | MAXIMUM REVERSE LEAKAGE AT $V_{WM}$ $I_D$ (µA) (3) | MAXIMUM PEAK PULSE SURGE CURRENT $I_{PPM}$ (A) (2) | MAXIMUM CLAMPING VOLTAGE AT $I_{PPM}$ $V_C$ (V) |
|---|---|---|---|---|---|---|---|---|---|
| | UNI | BI | MIN. | MAX. | | | | | |
| (+)SMCJ5.0A (5) | GDE | GDE | 6.40 | 7.07 | 10 | 5.0 | 1000 | 163.0 | 9.2 |
| (+)SMCJ6.0A | GDG | GDG | 6.67 | 7.37 | 10 | 6.0 | 1000 | 145.6 | 10.3 |
| (+)SMCJ6.5A | GDK | BDK | 7.22 | 7.98 | 10 | 6.5 | 500 | 133.9 | 11.2 |
| (+)SMCJ7.0A | GDM | GDM | 7.78 | 8.60 | 10 | 7.0 | 200 | 125.0 | 12.0 |
| (+)SMCJ7.5A | GDP | BDP | 8.33 | 9.21 | 1.0 | 7.5 | 100 | 116.3 | 12.9 |
| (+)SMCJ8.0A | GDR | BDR | 8.89 | 9.83 | 1.0 | 8.0 | 50 | 110.3 | 13.6 |
| (+)SMCJ8.5A | GDT | BDT | 9.44 | 10.4 | 1.0 | 8.5 | 20 | 104.2 | 14.4 |
| (+)SMCJ9.0A | GDV | BDV | 10.0 | 11.1 | 1.0 | 9.0 | 10 | 97.4 | 15.4 |
| (+)SMCJ10A | GDX | BDX | 11.1 | 12.3 | 1.0 | 10 | 5.0 | 88.2 | 17.0 |
| (+)SMCJ11A | GDZ | GDZ | 12.2 | 13.5 | 1.0 | 11 | 5.0 | 82.4 | 18.2 |
| (+)SMCJ12A | GEE | BEE | 13.3 | 14.7 | 1.0 | 12 | 5.0 | 75.4 | 19.9 |
| (+)SMCJ13A | GEG | GEG | 14.4 | 15.9 | 1.0 | 13 | 1.0 | 69.8 | 21.5 |
| (+)SMCJ14A | GEK | BEK | 15.6 | 17.2 | 1.0 | 14 | 1.0 | 64.7 | 23.2 |
| (+)SMCJ15A | GEM | BEM | 16.7 | 18.5 | 1.0 | 15 | 1.0 | 61.5 | 24.4 |
| (+)SMCJ16A | GEP | GEP | 17.8 | 19.7 | 1.0 | 16 | 1.0 | 57.7 | 26.0 |
| (+)SMCJ17A | GER | GER | 18.9 | 20.9 | 1.0 | 17 | 1.0 | 54.3 | 27.6 |
| (+)SMCJ18A | GET | BET | 20.0 | 22.1 | 1.0 | 18 | 1.0 | 51.4 | 29.2 |
| (+)SMCJ20A | GEV | BEV | 22.2 | 24.5 | 1.0 | 20 | 1.0 | 46.3 | 32.4 |
| (+)SMCJ22A | GEX | BEX | 24.4 | 26.9 | 1.0 | 22 | 1.0 | 42.3 | 35.5 |
| (+)SMCJ24A | GEZ | BEZ | 26.7 | 29.5 | 1.0 | 24 | 1.0 | 38.6 | 38.9 |
| (+)SMCJ26A | GFE | BFE | 28.9 | 31.9 | 1.0 | 26 | 1.0 | 35.6 | 42.1 |
| (+)SMCJ28A | GFG | BFG | 31.1 | 34.4 | 1.0 | 28 | 1.0 | 33.0 | 45.4 |
| (+)SMCJ30A | GFK | BFK | 33.3 | 36.8 | 1.0 | 30 | 1.0 | 31.0 | 48.4 |
| (+)SMCJ33A | GFM | BFM | 36.7 | 40.6 | 1.0 | 33 | 1.0 | 28.1 | 53.3 |
| (+)SMCJ36A | GFP | BFP | 40.0 | 44.2 | 1.0 | 36 | 1.0 | 25.8 | 58.1 |
| (+)SMCJ40A | GFR | BFR | 44.4 | 49.1 | 1.0 | 40 | 1.0 | 23.3 | 64.5 |
| (+)SMCJ43A | GFT | BFT | 47.8 | 52.8 | 1.0 | 43 | 1.0 | 21.6 | 69.4 |
| (+)SMCJ45A | GFV | GFV | 50.0 | 55.3 | 1.0 | 45 | 1.0 | 20.6 | 72.7 |
| (+)SMCJ48A | GFX | GFX | 53.3 | 58.9 | 1.0 | 48 | 1.0 | 19.4 | 77.4 |
| (+)SMCJ51A | GFZ | GFZ | 56.7 | 62.7 | 1.0 | 51 | 1.0 | 18.2 | 82.4 |
| (+)SMCJ54A | GGE | GGE | 60.0 | 66.3 | 1.0 | 54 | 1.0 | 17.2 | 87.1 |
| (+)SMCJ58A | GGG | GGG | 64.4 | 71.2 | 1.0 | 58 | 1.0 | 16.0 | 93.6 |
| (+)SMCJ60A | GGK | GGK | 66.7 | 73.7 | 1.0 | 60 | 1.0 | 15.5 | 96.8 |
| (+)SMCJ64A | GGM | GGM | 71.1 | 78.6 | 1.0 | 64 | 1.0 | 14.6 | 103 |
| (+)SMCJ70A | GGP | GGP | 77.8 | 86.0 | 1.0 | 70 | 1.0 | 13.3 | 113 |
| (+)SMCJ75A | GGR | GGR | 83.3 | 92.1 | 1.0 | 75 | 1.0 | 12.4 | 121 |
| (+)SMCJ78A | GGT | GGT | 86.7 | 95.8 | 1.0 | 78 | 1.0 | 11.9 | 126 |
| (+)SMCJ85A | GGV | GGV | 94.4 | 104 | 1.0 | 85 | 1.0 | 10.9 | 137 |
| (+)SMCJ90A | GGX | GGX | 100 | 111 | 1.0 | 90 | 1.0 | 10.3 | 146 |
| (+)SMCJ100A | GGZ | GGZ | 111 | 123 | 1.0 | 100 | 1.0 | 9.3 | 162 |
| (+)SMCJ110A | GHE | GHE | 122 | 135 | 1.0 | 110 | 1.0 | 8.5 | 177 |
| (+)SMCJ120A | GHG | GHG | 133 | 147 | 1.0 | 120 | 1.0 | 7.8 | 193 |
| (+)SMCJ130A | GHK | GHK | 144 | 159 | 1.0 | 130 | 1.0 | 7.2 | 209 |
| (+)SMCJ150A | GHM | GHM | 167 | 185 | 1.0 | 150 | 1.0 | 6.2 | 243 |
| (+)SMCJ160A | GHP | GHP | 178 | 197 | 1.0 | 160 | 1.0 | 5.8 | 259 |
| (+)SMCJ170A | GHR | GHR | 189 | 209 | 1.0 | 170 | 1.0 | 5.5 | 275 |
| SMCJ188A | GHS | GHS | 209 | 231 | 1.0 | 188 | 1.0 | 4.6 | 328 |

**Notes**

(1) Pulse test: $t_p \leq 50$ ms

(2) Surge current waveform per fig. 3 and derate per fig. 2

(3) For bi-directional types having $V_{WM}$ of 10 V and less, the $I_D$ limit is doubled

(4) All terms and symbols are consistent with ANSI/IEEE C62.35

(5) For the bi-directional SMCJ5.0CA, the maximum $V_{BR}$ is 7.25 V

(6) $V_F$ = 3.5 V at $I_F$ = 100 A (uni-directional only)

(+) Underwriters laboratory recognition for the classification of protectors (QVGQ2) under the UL standard for safety 497B and file number E136766 for both uni-directional and bi-directional devices


For technical questions within your region: DiodesAmericas@vishay.com, DiodesAsia@vishay.com, DiodesEurope@vishay.com
THIS DOCUMENT IS SUBJECT TO CHANGE WITHOUT NOTICE. THE PRODUCTS DESCRIBED HEREIN AND THIS DOCUMENT ARE SUBJECT TO SPECIFIC DISCLAIMERS, SET FORTH AT www.vishay.com/doc?91000

| THERMAL CHARACTERISTICS ($T_A$ = 25 °C unless otherwise noted) | | | |
|---|---|---|---|
| **PARAMETER** | **SYMBOL** | **VALUE** | **UNIT** |
| Typical thermal resistance, junction to ambient air (1) | $R_{\theta JA}$ | 75 | °C/ W |
| Typical thermal resistance, junction to lead | $R_{\theta JL}$ | 15 | |

**Note**

(1) Mounted on minimum recommended pad layout

| ORDERING INFORMATION (Example) | | | | |
|---|---|---|---|---|
| **PREFERRED P/N** | **UNIT WEIGHT (g)** | **PREFERRED PACKAGE CODE** | **BASE QUANTITY** | **DELIVERY MODE** |
| SMCJ5.0A-E3/57T | 0.211 | 57T | 850 | 7" diameter plastic tape and reel |
| SMCJ5.0A-M3/57T | | | | |
| SMCJ5.0A-E3/9AT | 0.211 | 9AT | 3500 | 13" diameter plastic tape and reel |
| SMCJ5.0A-M3/9AT | | | | |
| SMCJ5.0AHE3_A/H (1) | 0.211 | H | 850 | 7" diameter plastic tape and reel |
| SMCJ5.0AHM3_A/H (1) | | | | |
| SMCJ5.0AHE3_A/I (1) | 0.211 | I | 3500 | 13" diameter plastic tape and reel |
| SMCJ5.0AHM3_A/I (1) | | | | |

**Note**

(1) AEC-Q101 qualified

## RATINGS AND CHARACTERISTICS CURVES ($T_A$ = 25 °C unless otherwise noted)

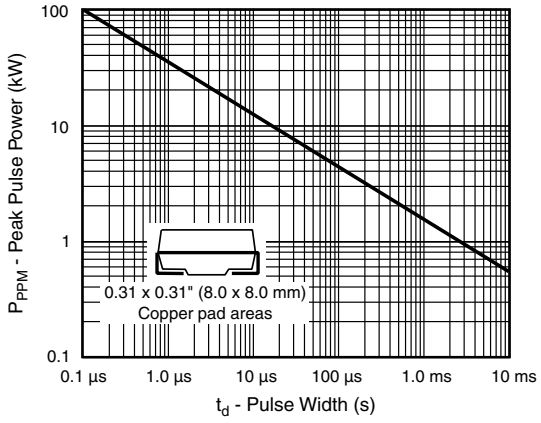


Fig. 1 - Peak Pulse Power Rating Curve

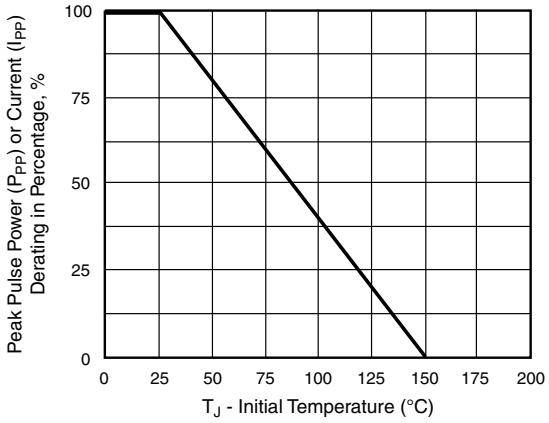


Fig. 2 - Pulse Power or Current vs. Initial Junction Temperature



For technical questions within your region: DiodesAmericas@vishay.com, DiodesAsia@vishay.com, DiodesEurope@vishay.com

THIS DOCUMENT IS SUBJECT TO CHANGE WITHOUT NOTICE. THE PRODUCTS DESCRIBED HEREIN AND THIS DOCUMENT ARE SUBJECT TO SPECIFIC DISCLAIMERS, SET FORTH AT www.vishay.com/doc?91000

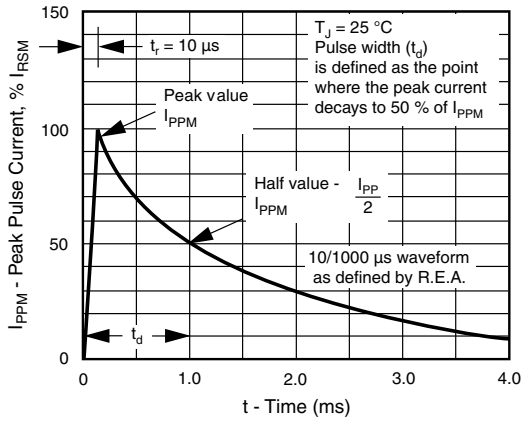


Fig. 3 - Pulse Waveform

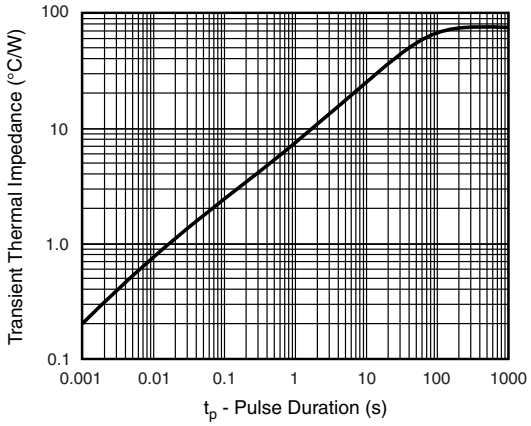


Fig. 5 - Typical Transient Thermal Impedance

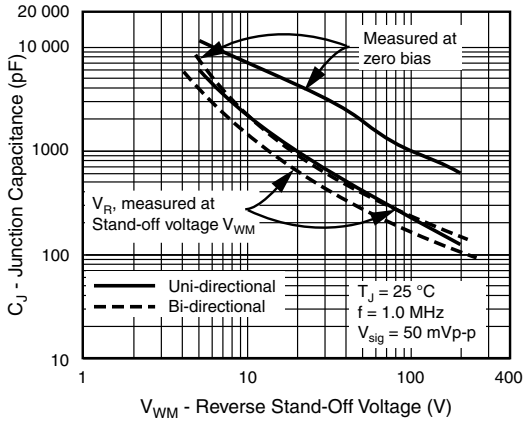


Fig. 4 - Typical Junction Capacitance Uni-Directional

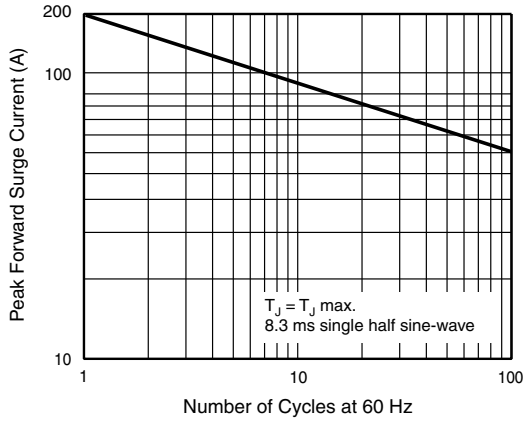


Fig. 6 - Maximum Non-Repetitive Peak Forward Surge Current
Uni-Directional Use On

## **PACKAGE OUTLINE DIMENSIONS** in inches (millimeters)

**SMC (DO-214AB)**

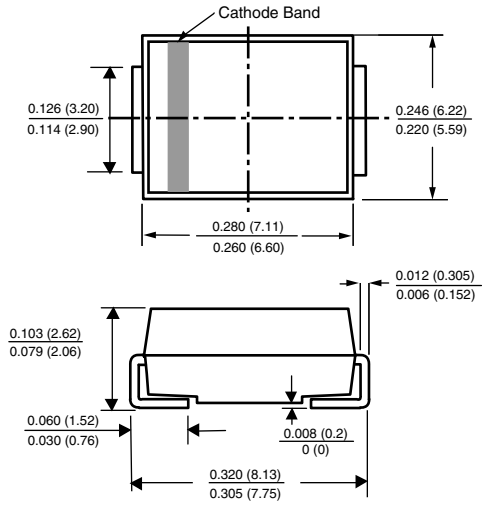


**Mounting Pad Layout**

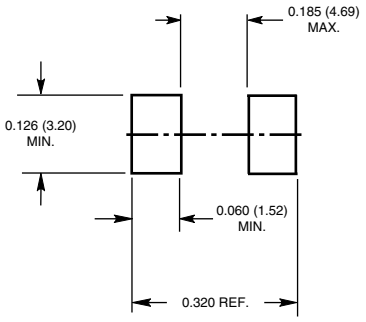



For technical questions within your region: DiodesAmericas@vishay.com, DiodesAsia@vishay.com, DiodesEurope@vishay.com
THIS DOCUMENT IS SUBJECT TO CHANGE WITHOUT NOTICE. THE PRODUCTS DESCRIBED HEREIN AND THIS DOCUMENT ARE SUBJECT TO SPECIFIC DISCLAIMERS, SET FORTH AT www.vishay.com/doc?91000

# Disclaimer

ALL PRODUCT, PRODUCT SPECIFICATIONS AND DATA ARE SUBJECT TO CHANGE WITHOUT NOTICE TO IMPROVE RELIABILITY, FUNCTION OR DESIGN OR OTHERWISE.

Vishay Intertechnology, Inc., its affiliates, agents, and employees, and all persons acting on its or their behalf (collectively, “Vishay”), disclaim any and all liability for any errors, inaccuracies or incompleteness contained in any datasheet or in any other disclosure relating to any product.

Vishay makes no warranty, representation or guarantee regarding the suitability of the products for any particular purpose or the continuing production of any product. To the maximum extent permitted by applicable law, Vishay disclaims (i) any and all liability arising out of the application or use of any product, (ii) any and all liability, including without limitation special, consequential or incidental damages, and (iii) any and all implied warranties, including warranties of fitness for particular purpose, non-infringement and merchantability.

Statements regarding the suitability of products for certain types of applications are based on Vishay’s knowledge of typical requirements that are often placed on Vishay products in generic applications. Such statements are not binding statements about the suitability of products for a particular application. It is the customer’s responsibility to validate that a particular product with the properties described in the product specification is suitable for use in a particular application. Parameters provided in datasheets and / or specifications may vary in different applications and performance may vary over time. All operating parameters, including typical parameters, must be validated for each customer application by the customer’s technical experts. Product specifications do not expand or otherwise modify Vishay’s terms and conditions of purchase, including but not limited to the warranty expressed therein.

Except as expressly indicated in writing, Vishay products are not designed for use in medical, life-saving, or life-sustaining applications or for any other application in which the failure of the Vishay product could result in personal injury or death. Customers using or selling Vishay products not expressly indicated for use in such applications do so at their own risk. Please contact authorized Vishay personnel to obtain written terms and conditions regarding products designed for such applications.

No license, express or implied, by estoppel or otherwise, to any intellectual property rights is granted by this document or by any conduct of Vishay. Product names and markings noted herein may be trademarks of their respective owners.

*© 2019 VISHAY INTERTECHNOLOGY, INC. ALL RIGHTS RESERVED*

## Looking for pricing, stock, or lifecycle information?

Click below to explore more details on WIN SOURCE:

- View SMCJ15CA-E3/9AT on WIN SOURCE
- Vishay Information

## Optimize Your Supply Chain with WIN SOURCE Solutions

- Global Sourcing Solution
- Obsolete Management
- Cost Control Management
- Shortage Management
- Alternative Solution
- Excess Inventory Management