# THE DATASHEET OF

# SMC3K36CA-M3/57

www.win-source.net 0086-755-83957316

# SMC3K22CA thru SMC3K78CA

Vishay General Semiconductor

## Surface Mount TRANSZORB® Transient Voltage Suppressors



SMC (DO-214AB)



### LINKS TO ADDITIONAL RESOURCES

3D Models

| PRIMARY CHARACTERISTICS | |
|---|---|
| $V_{BR}$ | 24.4 V to 95.8 V |
| $V_{WM}$ | 22 V to 78 V |
| $P_{PPM}$ | 3000 W |
| $T_J$ max. | 150 °C |
| Polarity | Bidirectional |
| Package | SMC (DO-214AB) |

### FEATURES

AUTOMOTIVE GRADE Available

RoHS COMPLIANT

HALOGEN FREE Available

- Available in bidirectional polarity only
- 3000 W peak pulse power capability with a (10/1000 µs) waveform
- Excellent clamping capability
- Very fast response time
- Low incremental surge resistance
- Meets MSL level 1, per J-STD-020, LF maximum peak of 260 °C
- Not recommended for PCB bottom side wave mounting
- AEC-Q101 qualified
- UL recognition for safety 497B with file number E136766
- Material categorization: for definitions of compliance please see www.vishay.com/doc?99912

### TYPICAL APPLICATIONS

Use in sensitive electronics protection against voltage transients induced by inductive load switching and lighting on ICs, MOSFET, signal lines of sensor units for consumer, computer, industrial, automotive and telecommunication.

### MECHANICAL DATA

**Case:** SMC (DO-214AB)
Molding compound meets UL 94 V-0 flammability rating
Base P/N-M3 - halogen-free, RoHS-compliant, and commercial grade
Base P/NHM3 - halogen-free, RoHS-compliant, and AEC-Q101 qualified

**Terminals:** matte tin plated leads, solderable per J-STD-002 and JESD 22-B102
M3 suffix meets JESD 201 class 2 whisker test, HM3 suffix meets JESD 201 class 2 whisker test

**Polarity:** no marking on bidirectional types

| MAXIMUM RATINGS ($T_A$ = 25 °C unless otherwise noted) | | | |
|---|---|---|---|
| **PARAMETER** | **SYMBOL** | **VALUE** | **UNIT** |
| Peak pulse power dissipation with a 10/1000 µs waveform | $P_{PPM}$ (1) | 3000 | W |
| Peak pulse current with a 10/1000 µs waveform | $I_{PPM}$ (1) | See next table | A |
| Operating junction and storage temperature range | $T_J$, $T_{STG}$ | -55 to +150 | °C |

**Note**

(1) Non-repetitive current pulse and derated above $T_A$ = 25 °C



For technical questions within your region: DiodesAmericas@vishay.com, DiodesAsia@vishay.com, DiodesEurope@vishay.com
THIS DOCUMENT IS SUBJECT TO CHANGE WITHOUT NOTICE. THE PRODUCTS DESCRIBED HEREIN AND THIS DOCUMENT ARE SUBJECT TO SPECIFIC DISCLAIMERS, SET FORTH AT www.vishay.com/doc?91000

| **ELECTRICAL CHARACTERISTICS** ($T_A$ = 25 °C unless otherwise noted) | | | | | | | | |
|---|---|---|---|---|---|---|---|---|
| **DEVICE TYPE** | **DEVICE MARKING CODE** | **BREAKDOWN VOLTAGE $V_{BR}$ (1) (V) AT $I_T$** | | **TEST CURRENT $I_T$ (mA)** | **STAND-OFF VOLTAGE $V_{WM}$ (V)** | **MAXIMUM REVERSE LEAKAGE AT $V_{WM}$ $I_D$ (µA)** | **MAX. PEAK PULSE SURGE CURRENT $I_{PPM}$ (2) (A)** | **MAXIMUM CLAMPING VOLTAGE AT $I_{PPM}$ $V_C$ (V)** |
| | | **MIN.** | **MAX.** | | | | | |
| SMC3K22CA | 3BEX | 24.4 | 26.9 | 1.0 | 22 | 2.0 | 84.5 | 35.5 |
| SMC3K24CA | 3BEZ | 26.7 | 29.5 | 1.0 | 24 | 2.0 | 77.1 | 38.9 |
| SMC3K26CA | 3BFE | 28.9 | 31.9 | 1.0 | 26 | 2.0 | 71.3 | 42.1 |
| SMC3K28CA | 3BFG | 31.1 | 34.4 | 1.0 | 28 | 2.0 | 66.1 | 45.4 |
| SMC3K30CA | 3BFK | 33.3 | 36.8 | 1.0 | 30 | 2.0 | 62.0 | 48.4 |
| SMC3K33CA | 3BFM | 36.7 | 40.6 | 1.0 | 33 | 2.0 | 56.3 | 53.3 |
| SMC3K36CA | 3BFP | 40.0 | 44.2 | 1.0 | 36 | 2.0 | 51.6 | 58.1 |
| SMC3K40CA | 3BFR | 44.4 | 49.1 | 1.0 | 40 | 2.0 | 46.5 | 64.5 |
| SMC3K43CA | 3BFT | 47.8 | 52.8 | 1.0 | 43 | 2.0 | 43.2 | 69.4 |
| SMC3K45CA | 3GFV | 50.0 | 55.3 | 1.0 | 45 | 2.0 | 41.3 | 72.7 |
| SMC3K48CA | 3GFX | 53.3 | 58.9 | 1.0 | 48 | 2.0 | 38.8 | 77.4 |
| SMC3K51CA | 3GFZ | 56.7 | 62.7 | 1.0 | 51 | 2.0 | 36.4 | 82.4 |
| SMC3K54CA | 3GGE | 60.0 | 66.3 | 1.0 | 54 | 2.0 | 34.4 | 87.1 |
| SMC3K58CA | 3GGG | 64.4 | 71.2 | 1.0 | 58 | 2.0 | 32.1 | 93.6 |
| SMC3K60CA | 3GGK | 66.7 | 73.7 | 1.0 | 60 | 2.0 | 31.0 | 96.8 |
| SMC3K64CA | 3GGM | 71.1 | 78.6 | 1.0 | 64 | 2.0 | 29.1 | 103 |
| SMC3K70CA | 3GGP | 77.8 | 86.0 | 1.0 | 70 | 2.0 | 26.5 | 113 |
| SMC3K75CA | 3GGR | 83.3 | 92.1 | 1.0 | 75 | 2.0 | 24.8 | 121 |
| SMC3K78CA | 3GGT | 86.7 | 95.8 | 1.0 | 78 | 2.0 | 23.8 | 126 |

**Notes**

(1) Pulse test: $t_p \leq 50$ ms

(2) Surge current waveform per fig. 3 and derated per fig.2

(3) All terms and symbols are consistent with ANSI/IEEE C62.35

| **ORDERING INFORMATION** (Example) | | | | |
|---|---|---|---|---|
| **PREFERRED P/N** | **UNIT WEIGHT (g)** | **PREFERRED PACKAGE CODE** | **BASE QUANTITY** | **DELIVERY MODE** |
| SMC3K22CA-M3/57 | 0.257 | 57 | 850 | 7" diameter plastic tape and reel |
| SMC3K22CA-M3/9A | 0.257 | 9A | 3500 | 13" diameter plastic tape and reel |
| SMC3K22CAHM3/57 (1) | 0.257 | 57 | 850 | 7" diameter plastic tape and reel |
| SMC3K22CAHM3/9A (1) | 0.257 | 9A | 3500 | 13" diameter plastic tape and reel |

**Note**

(1) AEC-Q101 qualified



For technical questions within your region: DiodesAmericas@vishay.com, DiodesAsia@vishay.com, DiodesEurope@vishay.com

THIS DOCUMENT IS SUBJECT TO CHANGE WITHOUT NOTICE. THE PRODUCTS DESCRIBED HEREIN AND THIS DOCUMENT ARE SUBJECT TO SPECIFIC DISCLAIMERS, SET FORTH AT www.vishay.com/doc?91000

**RATINGS AND CHARACTERISTICS CURVES** ($T_A$ = 25 °C unless otherwise noted)

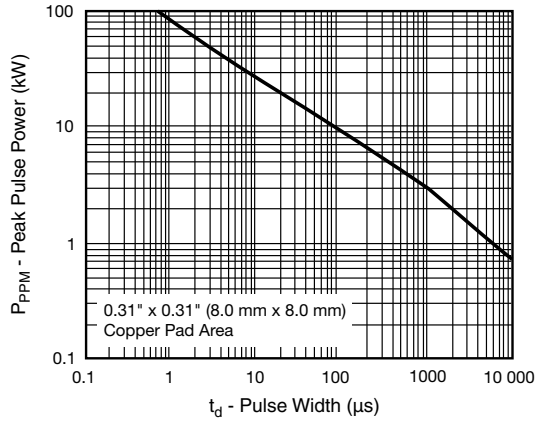


Fig. 1 - Peak Pulse Power Derating Curve

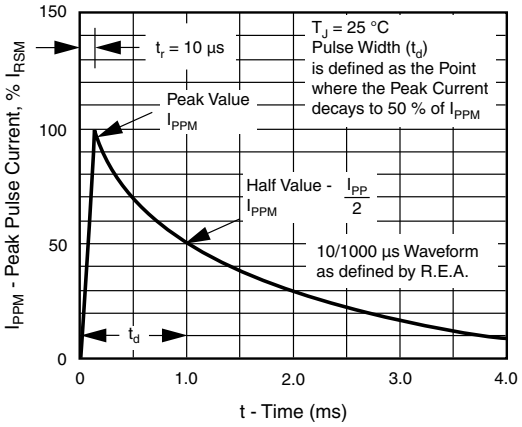


Fig. 3 - Pulse Waveform

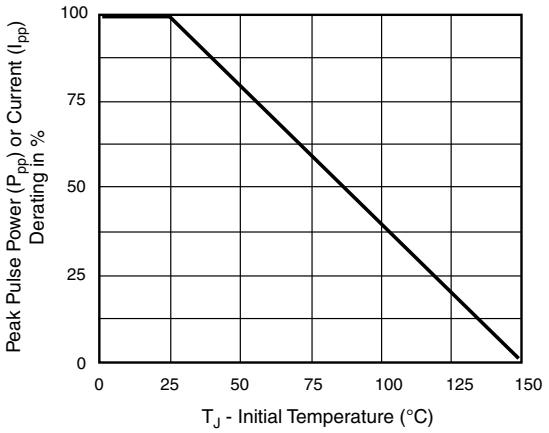


Fig. 2 - Pulse Power or Current vs. Initial Junction Temperature

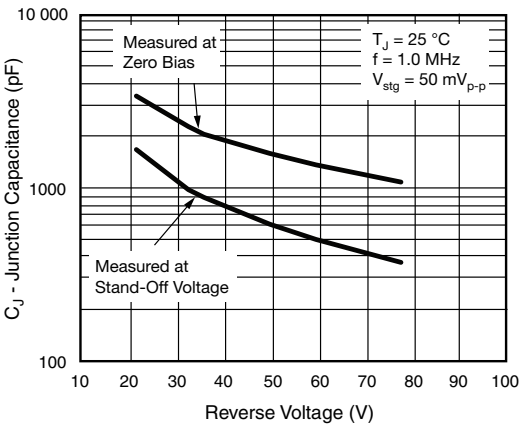


Fig. 4 - Typical Junction Capacitance



For technical questions within your region: DiodesAmericas@vishay.com, DiodesAsia@vishay.com, DiodesEurope@vishay.com

THIS DOCUMENT IS SUBJECT TO CHANGE WITHOUT NOTICE. THE PRODUCTS DESCRIBED HEREIN AND THIS DOCUMENT ARE SUBJECT TO SPECIFIC DISCLAIMERS, SET FORTH AT www.vishay.com/doc?91000

**PACKAGE OUTLINE DIMENSIONS** in inches (millimeters)

**SMC (DO-214AB)**

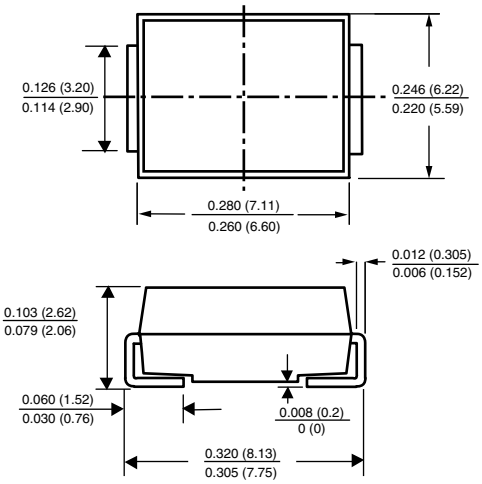


**Mounting Pad Layout**

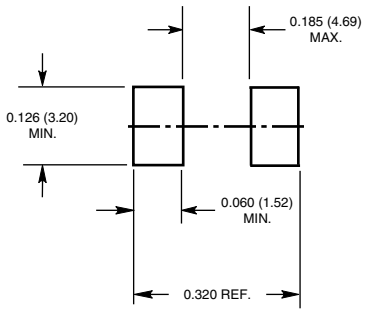




For technical questions within your region: DiodesAmericas@vishay.com, DiodesAsia@vishay.com, DiodesEurope@vishay.com

THIS DOCUMENT IS SUBJECT TO CHANGE WITHOUT NOTICE. THE PRODUCTS DESCRIBED HEREIN AND THIS DOCUMENT ARE SUBJECT TO SPECIFIC DISCLAIMERS, SET FORTH AT www.vishay.com/doc?91000

# Disclaimer

ALL PRODUCT, PRODUCT SPECIFICATIONS AND DATA ARE SUBJECT TO CHANGE WITHOUT NOTICE TO IMPROVE RELIABILITY, FUNCTION OR DESIGN OR OTHERWISE.

Vishay Intertechnology, Inc., its affiliates, agents, and employees, and all persons acting on its or their behalf (collectively, “Vishay”), disclaim any and all liability for any errors, inaccuracies or incompleteness contained in any datasheet or in any other disclosure relating to any product.

Vishay makes no warranty, representation or guarantee regarding the suitability of the products for any particular purpose or the continuing production of any product. To the maximum extent permitted by applicable law, Vishay disclaims (i) any and all liability arising out of the application or use of any product, (ii) any and all liability, including without limitation special, consequential or incidental damages, and (iii) any and all implied warranties, including warranties of fitness for particular purpose, non-infringement and merchantability.

Statements regarding the suitability of products for certain types of applications are based on Vishay's knowledge of typical requirements that are often placed on Vishay products in generic applications. Such statements are not binding statements about the suitability of products for a particular application. It is the customer's responsibility to validate that a particular product with the properties described in the product specification is suitable for use in a particular application. Parameters provided in datasheets and / or specifications may vary in different applications and performance may vary over time. All operating parameters, including typical parameters, must be validated for each customer application by the customer's technical experts. Product specifications do not expand or otherwise modify Vishay's terms and conditions of purchase, including but not limited to the warranty expressed therein.

Hyperlinks included in this datasheet may direct users to third-party websites. These links are provided as a convenience and for informational purposes only. Inclusion of these hyperlinks does not constitute an endorsement or an approval by Vishay of any of the products, services or opinions of the corporation, organization or individual associated with the third-party website. Vishay disclaims any and all liability and bears no responsibility for the accuracy, legality or content of the third-party website or for that of subsequent links.

Except as expressly indicated in writing, Vishay products are not designed for use in medical, life-saving, or life-sustaining applications or for any other application in which the failure of the Vishay product could result in personal injury or death. Customers using or selling Vishay products not expressly indicated for use in such applications do so at their own risk. Please contact authorized Vishay personnel to obtain written terms and conditions regarding products designed for such applications.

No license, express or implied, by estoppel or otherwise, to any intellectual property rights is granted by this document or by any conduct of Vishay. Product names and markings noted herein may be trademarks of their respective owners.

*© 2024 VISHAY INTERTECHNOLOGY, INC. ALL RIGHTS RESERVED*

## Looking for pricing, stock, or lifecycle information?

Click below to explore more details on WIN SOURCE:

- View SMC3K36CA-M3/57 on WIN SOURCE
- Vishay Information

## Optimize Your Supply Chain with WIN SOURCE Solutions

- Global Sourcing Solution
- Obsolete Management
- Cost Control Management
- Shortage Management
- Alternative Solution
- Excess Inventory Management