THE DATASHEET OF

SMAJ130A-E3/61

Packaging Information

PACKAGING ORDERING CODE		
ANTI-STATIC PACKAGE CODE	**PREFERRED PACKAGE CODE**	**PACKAGING DESCRIPTION**
51, A		Bulk
52, 52T	**P**	**SMB (DO-214AA) /SMBG (DO-215AA), 12 mm tape, 7" diameter plastic reel**
2D	**P**	**SM5-8A (DO-218AB), 24 mm tape, 13" diameter plastic reel, anode towards sprocket hole**
2E, K		SM5-8A (DO-218AB), 24 mm tape, 13" diameter plastic reel, cathode towards sprocket hole
2M, P		Tube packaging for 5KP/6KA type lead formed components
53, B		26 mm horizontal taping and ammo box packaging
54, C	**P**	**52.4 mm horizontal tape, 13" diameter paper reel**
5A, 5AT	**P**	**SMA (DO-214AC), 12 mm tape, 13" diameter plastic reel**
5B, 5BT	**P**	**SMB (DO-214AA) / SMBG (DO-215AA), 12 mm tape, 13" diameter plastic reel**
5CA	**P**	**GF1 (DO-214BA), 12 mm tape, 13" diameter plastic reel**
57, 57T	**P**	**SMC (DO-214AB) / SMCG (DO-215AB), 16 mm tape, 7" diameter plastic reel**
6A	**P**	**SlimSMA (DO-221AC), 12 mm tape, 7" diameter plastic reel**
6B	**P**	**SlimSMA (DO-221AC), 12 mm tape, 13" diameter plastic reel**
9A, 9AT	**P**	**SMC (DO-214AB) / SMCG (DO-215AB), 16 mm tape, 13" diameter plastic reel**
61, 61T	**P**	**SMA (DO-214AC), 12 mm tape, 7" diameter plastic reel**
67A	**P**	**GF1 (DO-214BA), 12 mm tape, 7" diameter plastic reel**
72, E	**P**	**Bulk pack for bridge and special axial-leaded formed devices**
73, D		52.4 mm horizontal tape and ammo box packaging
77	**P**	**DFS bridge, 16 mm tape, 13" diameter paper reel**
80	**P**	**MB-S (TO-269AA) bridge, 12 mm tape, 13" diameter paper reel**
81	**P**	**D^2PAK (TO-263AB) 24 mm tape, 13" diameter reinforced hub plastic reel**
8W	**P**	**D^2PAK (TO-263AB) (wire bond) 24 mm tape, 13" diameter reinforced hub plastic reel**
83	**P**	**GL34 (DO-213AA) 8 mm tape, 13" diameter plastic reel**
84A	**P**	**SMP (DO-220AA) 12 mm tape, 7" diameter plastic reel**
85A	**P**	**SMP (DO-220AA) 12 mm tape, 13" diameter plastic reel**
86A	**P**	**SMPC (TO-277A), 12 mm tape, 7" diameter plastic reel**
87A	**P**	**SMPC (TO-277A), 12 mm tape, 13" diameter plastic reel**
89A	**P**	**MicroSMP (DO-219AD), 8 mm tape, 7" diameter plastic reel**
45, P	**P**	**Anti-static tube packaging for Bridge and Power Pack**
4W, P	**P**	**Anti-static tube packaging for wire bond TO-220, ITO-220, TO-262 and TO-263**
96	**P**	**GL41 (DO-213AB), 12 mm tape, 7" diameter plastic reel**
97	**P**	**GL41 (DO-213AB), 12 mm tape, 13" diameter plastic reel**
98	**P**	**GL34 (DO-213AA), 8 mm tape, 7" diameter plastic reel**
100, V		MPG06 pseudo radial tape, cathode first out of ammo pack
H	**P**	Tape in 7" diameter plastic reel
I	**P**	Tape in 13" diameter plastic reel
TR	**P**	**SMA (DO-214AC), 12 mm tape, 7" diameter plastic reel [1]**
TR3	**P**	**SMA (DO-214AC), 12 mm tape, 13" diameter plastic reel [1]**

Notes

- "P" and bold letter denotes preferred package code
- A "T" suffix added to the packaging codes for SMA, SMB and SMC products indicates that the patented folded-frame construction is used. This does not apply to TR and TR3 codes or TRANSZORB® TVS in SMA and SMB

(1) Formerly sold by Vishay Telefunken® (Telefunken® is a registered trademark of Electro Holding GmbH)

For technical questions within your region: DiodesAmericas@vishay.com, DiodesAsia@vishay.com, DiodesEurope@vishay.com
THIS DOCUMENT IS SUBJECT TO CHANGE WITHOUT NOTICE. THE PRODUCTS DESCRIBED HEREIN AND THIS DOCUMENT ARE SUBJECT TO SPECIFIC DISCLAIMERS, SET FORTH AT www.vishay.com/doc?91000

BULK PACKAGING					
CASE TYPES	PREFERRED PACKAGE CODE	PACKAGING	BOX SIZE		QUANTITY
			INCHES	cm	EA.
DF-M, DF-S, DFL-S	45	Anti-static plastic tubes	17.4 length	44.1 length	50
GSIB-5S, PB	45	Anti-static plastic tubes	24.2 length	61.5 length	20
GBU, BU	45	Anti-static plastic tubes	18.5 length	47 length	20
GBL	45	Anti-static plastic tubes	17.5 length	44.5 length	20
TO-220AB / AC, ITO-220AC / AB, TO-262AA	45, 4W	Anti-static plastic tubes	21.0 length	53.7 length	50
TO-247AD	45	Anti-static plastic tubes	20.0 length	50.8 length	30
MBS (TO-269AA)	45	Anti-static plastic tubes	20.3 x 0.41	51.5 x 1.04	100
GBL	51	Anti-static PVC tray	12.5 x 6.1 x 1.0	31.7 x 15.5 x 2.5	400
GBPC12-35W	51	Paper box	12.5 x 12.5 x 1.7	31.7 x 31.7 x 4.3	100
GBPC6	51	Paper box	7.5 x 7.5 x 1.43	19.0 x 19.0 x 3.6	100
KBL	51	Anti-static PVC tray	12.2 x 6.1 x 1.5	30.9 x 15.5 x 3.8	300
GBPC12-35	51	Paper box	12.5 x 12.5 x 1.7	31.7 x 31.7 x 4.3	100
KBU4, 6, 8	51	Anti-static PVC tray	12.2 x 6.1 x 1.5	30.9 x 15.5 x 3.8	250
WOG, 2WOG	51	Plastic bags	-	-	100
GBU / BU	51	Paper tray	13.1 x 6.6 x 1.2	33.2 x 16.8 x 3.0	250

For technical questions within your region: DiodesAmericas@vishay.com, DiodesAsia@vishay.com, DiodesEurope@vishay.com
THIS DOCUMENT IS SUBJECT TO CHANGE WITHOUT NOTICE. THE PRODUCTS DESCRIBED HEREIN AND THIS DOCUMENT ARE SUBJECT TO SPECIFIC DISCLAIMERS, SET FORTH AT www.vishay.com/doc?91000

AXIAL-LEADED TAPE AND REEL PACKAGING

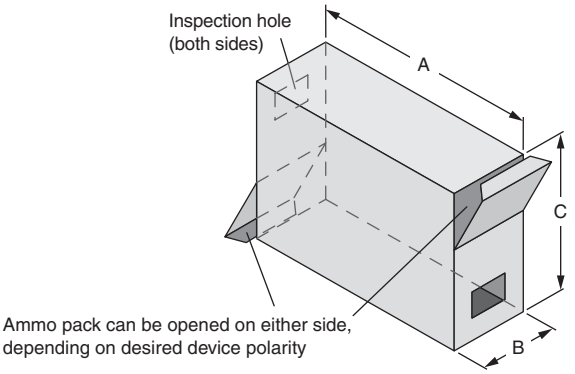

All axial-leaded devices are packed in accordance with EIA standard RS-296-E. The diagrams given below refer to these specifications.

TABLE 1 - AMMO PACK PACKAGING

PACKAGING	AVAILABLE PRODUCT OUTLINES	PREFERRED PACKAGE CODE	DIMENSION A	DIMENSION B	DIMENSION C	QUANTITY BOX
26 mm horizontal tape, ammo pack	DO-41(DO-204AL), MPG06 DO-15 (DO-204AC) P300	53, B 53, B 53, B	9.7" (247 mm)	1.7" (44 mm)	3.7" (95 mm)	3.0K 1.5K 0.75K
52 mm horizontal tape, ammo pack	DO-41(DO-204AL), MPG06 DO-15 (DO-204AC) DO-201AD, GP20 P600	73, D 73, D 73, D 73, D	10.0" (255 mm)	3.15" (80 mm)	4.53" (115 mm)	3.0K 2.0K 1.0K 0.3K
Pseudo / radial tape, ammo pack	MPG06	100, V	13.4" (340 mm)	1.8" (47 mm)	7.9" (200 mm)	2.0K

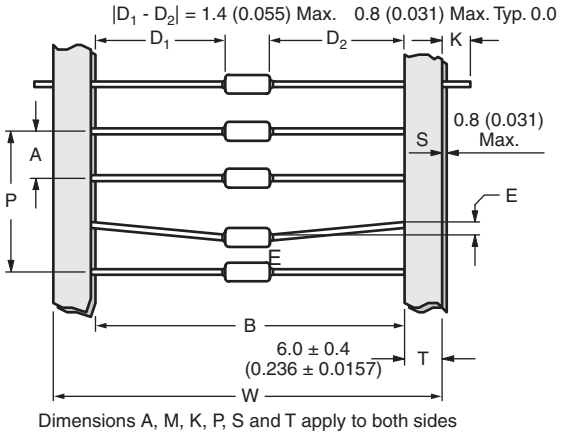

Dimensions in millimeters (inches)

Description	Symbol	
Component Pitch	A	2, 3
Inside Tape Spacing	B	2, 3
Lead to Lead Eccentricity	|D1 - D2|	-
Lead Extension	K	-
Lead Bending	E	2
Cumulative Pitch	P	3
Exposed Adhesive	S	-
Tape Width	T	-

All polarized components shall be oriented in the same direction

Fig. 1

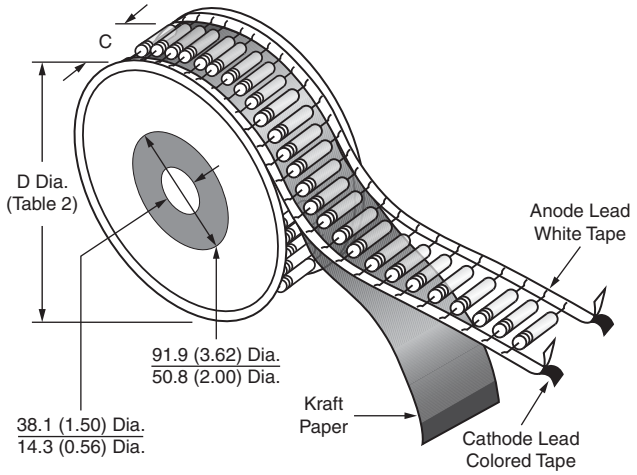

The "C" dimension of Fig. 2 is between flanges of the component reel and shall be 1.5 mm (0.059") to 8.00 mm (0.315") greater than the overall taped component width "W" (Fig. 1). Where "W" dimension is 68.2 mm (2.68") max.

Fig. 2

For technical questions within your region: DiodesAmericas@vishay.com, DiodesAsia@vishay.com, DiodesEurope@vishay.com

THIS DOCUMENT IS SUBJECT TO CHANGE WITHOUT NOTICE. THE PRODUCTS DESCRIBED HEREIN AND THIS DOCUMENT ARE SUBJECT TO SPECIFIC DISCLAIMERS, SET FORTH AT www.vishay.com/doc?91000

AXIAL-LEADED TAPE AND REEL PACKAGING

TABLE 2 - REEL AND AMMO PACK TAPING SPECIFICATIONS

COMPONENT CASE TYPE	PREFERRED PACKAGE CODE	UNITS PER REEL	COMPONENT PITCH "A" Fig. 1		INSIDE TAPE SPACING "B" Fig. 1		REEL DIMENSION "D" Fig. 2		LEAD BENDING "E" Fig. 1	
		EA.	INCHES	mm	INCHES	mm	INCHES	mm	INCHES	mm
DO-15 (DO-204AC)	54, C	4000	0.200	5.0	2.06	52.4	13.0	330	0.047	1.2
DO-201AD	54, C	1400	0.395	10.0	2.06	52.4	13.0	330	0.047	1.2
DO-41 (DO-204AL)	54, C	5500	0.200	5.0	2.06	52.4	13.0	330	0.047	1.2
DFS Surface-Mount	77	1500	Fig. 8		-	-	13.0	330	Fig. 8	-
GF1 (DO-214BA)	67A, H / 5CA, I	1500 / 6500			-	-	7.0 / 13.0	178 / 330	Fig. 8	-
GL34 (DO-213AA)	98, H / 83, I	2500 / 9000			-	-	7.0 / 13.0	178 / 330	Fig. 8	-
GL41 (DO-213AB)	96, H / 97, I	1500 / 5000			-	-	7.0 / 13.0	178 / 330	Fig. 8	-
GP10E Radial	Fig. 5 and Fig. 6	2500	0.500	12.7	-	-	13.0	330	0.079	2.0
GP10E	54, C	5500	0.200	5.0	2.06	52.4	13.0	330	0.047	1.2
GP20/1.5KE	54, C	1400	0.395	10.0	2.06	52.4	13.0	330	0.047	1.2
MPG06	54, C	5500	0.200	5.0	2.06	52.4	13.0	330	0.047	1.2
P600	54, C	800	0.395	10.0	2.06	52.4	13.0	330	0.047	1.2
SMP (DO-220AA)	84A, H / 85A, I	3000 / 10 000	Fig. 8		-	-	7.0 / 13.0	178 / 330	Fig. 8	-
SMF (DO-219AB)	H / I	3000 / 10 000			-	-	7.0 / 13.0	178 / 300	Fig. 8	-
SMPD (TO-263AC) / SMPA (DO-221BC)	I	2000 / 14 000			-	-	13.0	330	Fig. 8	-
MicroSMP (DO-219AD) / MicroSMF (DO-219AC)	89A / H	4500			-	-	7.0	178	Fig. 8	-
SMPC (TO-277A)	86A, H / 87A, I	1500 / 6500			-	-	7.0 / 13.0	178 / 330	Fig. 8	-
SMA (DO-214AC)	61, 61T, TR, H / 5A, 5AT, TR3, I	1800 / 7500			-	-	7.0 / 13.0	178 / 330	Fig. 8	-
SMB (DO-214AA) / SMBG (DO-215AA)	52, 52T, H / 5B, 5BT, I	750 / 3200			-	-	7.0 / 13.0	178 / 330	Fig. 8	-
SMC (DO-214AB) / SMCG (DO-215AB)	57, 57T, H / 9A, 9AT, I	850 / 3500			-	-	7.0 / 13.0	178 / 330	Fig. 8	-
DO-218AB / AC	2D / I	750			-	-	13.0	330	Fig. 8	-
D^2PAK (TO-263AB)	81, 8W, I	800			-	-	13.0	330	Fig. 8	-
MBS (TO-269AA)	80, I	3000			-	-	13.0	330	Fig. 8	-
SlimSMA (DO-221AC)	6A, H / 6B, I	3500 / 14 000			-	-	7.0 / 13.0	178 / 330	Fig. 8	-
SlimSMAW (DO-221AD)	H, I	3500 / 14 000			-	-	7.0 / 13.0	178 / 330	Fig. 8	-
SlimDPAK (TO-252AE)	I	4500			-	-	13.0	330	Fig. 8	-
FlatPAK 5 x 6	H / I	1500 / 6000			-	-	7.0 / 13.0	178 / 330	Fig. 8	-

Note

- Package codes, 61/5A, 52/5B are matrix-frame constructions for TRANSZORB® TVS in SMA and SMB only

TABLE 3 - COMPONENT AND INSIDE HORIZONTAL TAPE SPACING

COMPONENT BODY DIAMETER	COMPONENTS SPACING A (LEAD TO LEAD)	INSIDE TAPE SPACING "B"	CUMULATIVE PITCH TOLERANCE
0 mm to 5 mm (0.0" to 0.197")	5.0 mm ± 0.5 mm (0.197" ± 0.020")	26 mm + 1.5 mm / - 0.0 mm (1.024" + 0.059" / - 0.0")	Not to exceed 1.5 mm (0.059") over 6 consecutive components
0 mm to 5 mm (0.0" to 0.197")	5.0 mm ± 0.5 mm (0.197" ± 0.020")	52.4 mm + 1.5 mm / - 0.4 mm (2.062" + 0.059" / - 0.016")	
5.01 mm to 10 mm (0.197" to 0.394")	10 mm ± 0.5 mm (0.394" ± 0.020")	52.4 mm + 1.5 mm / - 0.4 mm (2.062" + 0.059" / - 0.016")	

For technical questions within your region: DiodesAmericas@vishay.com, DiodesAsia@vishay.com, DiodesEurope@vishay.com
THIS DOCUMENT IS SUBJECT TO CHANGE WITHOUT NOTICE. THE PRODUCTS DESCRIBED HEREIN AND THIS DOCUMENT ARE SUBJECT TO SPECIFIC DISCLAIMERS, SET FORTH AT www.vishay.com/doc?91000

DIMENSIONS in millimeters (inches)

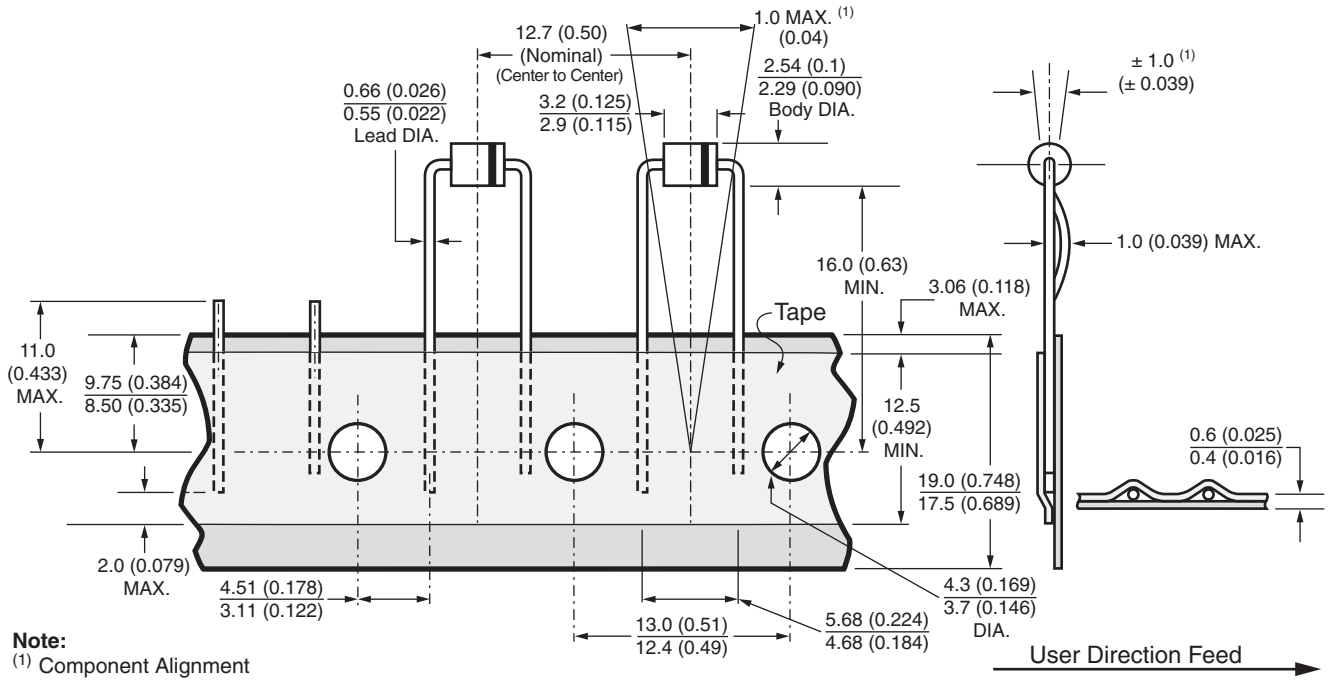

Note:
(1) Component Alignment

Available only for MPG06 Product in Ammo Pack in Accordance with EIA Standard RS-468-A Utilizing 0.61 mm (0.024") Diameter Leads. Maximum Cumulative Pitch Tolerance: 1.0 mm (0.039")/20 Pitch.

Fig. 3 - Pseudo Radial

RADIAL TAPE PACKAGING

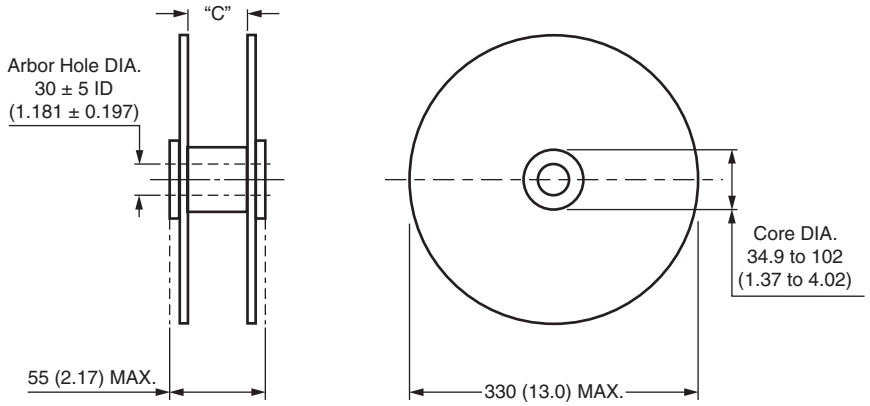

Fig. 4 - Reel Dimensions

Notes

- "C" dimension between the reel flanges shall be governed by the overall width of the taped components and shall be 1.5 mm (0.057") to 8.0 mm (0.315") greater than the overall width
- All leaded devices are packaged in accordance with EIA standard RS-468-A specification and are available on reel or in fan fold box (ammo pack)
- All dimensions are in millimeters and (inches)

For technical questions within your region: DiodesAmericas@vishay.com, DiodesAsia@vishay.com, DiodesEurope@vishay.com
THIS DOCUMENT IS SUBJECT TO CHANGE WITHOUT NOTICE. THE PRODUCTS DESCRIBED HEREIN AND THIS DOCUMENT ARE SUBJECT TO SPECIFIC DISCLAIMERS, SET FORTH AT www.vishay.com/doc?91000

SURFACE MOUNT TAPE AND REEL PACKAGING

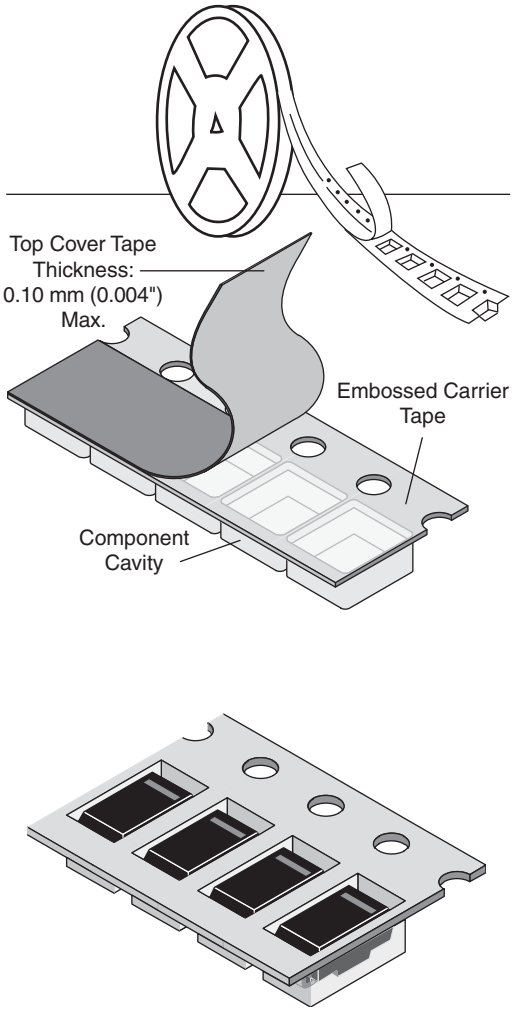

Fig. 5

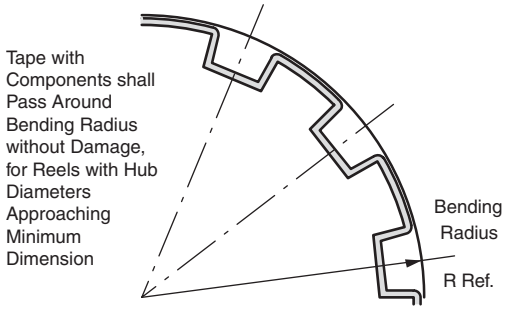

Fig. 6

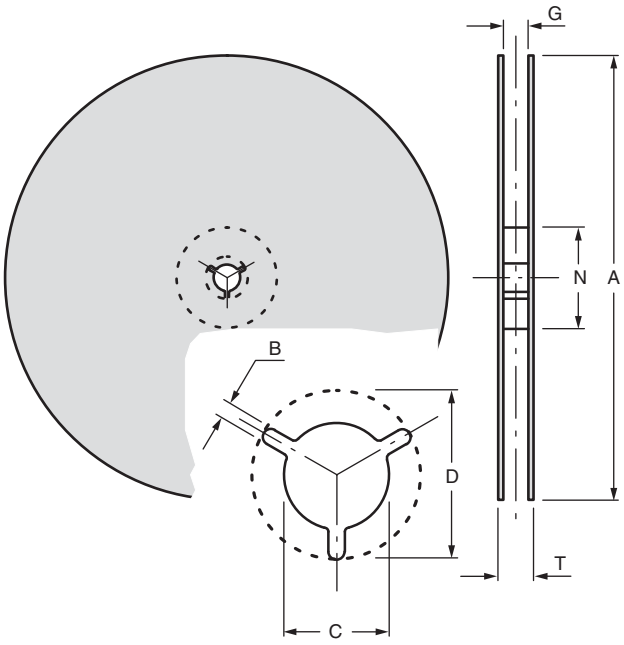

Fig. 7

DIMENSIONS in millimeters (inches)							
TAPE SIZE	**A MAX.**	**B MIN.**	**C**	**D MIN.**	**N MIN.**	**G MAX.**	**T MAX.**
8 mm (0.315)	330 ± 2.0 (13.0 ± 0.079) 178 ± 2.0 (7.0 ± 0.079)	1.5 (0.059)	13.0 ± 0.20 (0.51 ± 0.008)	20.2 (0.795)	50 (1.97)	9.9 (0.389)	14.4 (0.567)
12 mm (0.472)	330 ± 2.0 (13.0 ± 0.079) 178 ± 2.0 (7.0 ± 0.079)	1.5 (0.059)	13.0 ± 0.20 (0.51 ± 0.008)	20.2 (0.795)	50 (1.97)	14.4 (0.567)	18.4 (0.724)
16 mm (0.630)	330 ± 2.0 (13.0 ± 0.079) 178 ± 2.0 (7.0 ± 0.079)	1.5 (0.059)	13.0 ± 0.20 (0.51 ± 0.008)	20.2 (0.795)	50 (1.97)	18.4 (0.724)	22.4 (0.802)
24 mm (0.945)	330 ± 2.0 (13.0 ± 0.079) 178 ± 2.0 (7.0 ± 0.079)	1.5 (0.059)	13.0 ± 0.20 (0.51 ± 0.008)	20.2 (0.795)	50 (1.97)	26.4 (1.039)	30.4 (1.197)

For technical questions within your region: DiodesAmericas@vishay.com, DiodesAsia@vishay.com, DiodesEurope@vishay.com

THIS DOCUMENT IS SUBJECT TO CHANGE WITHOUT NOTICE. THE PRODUCTS DESCRIBED HEREIN AND THIS DOCUMENT ARE SUBJECT TO SPECIFIC DISCLAIMERS, SET FORTH AT www.vishay.com/doc?91000

SURFACE MOUNT TAPE AND REEL PACKAGING

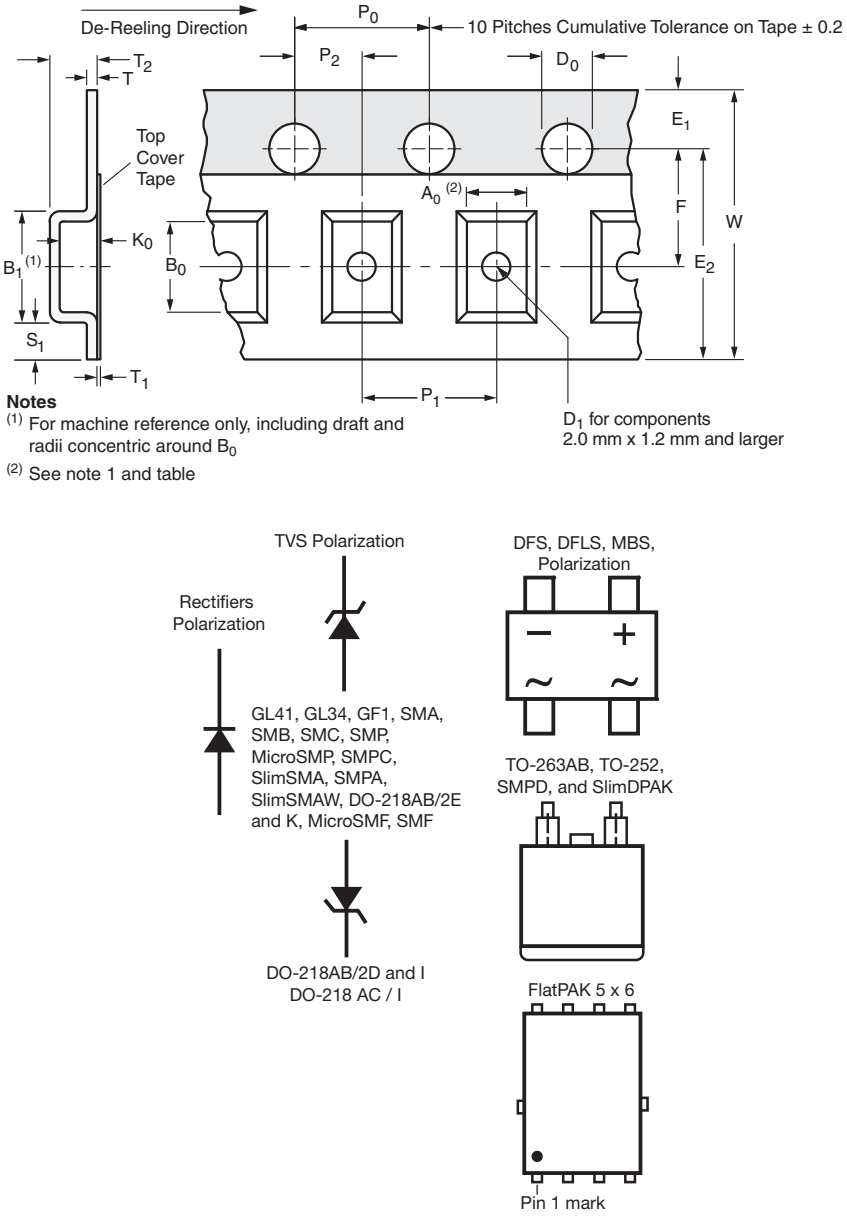

Fig. 8

8 mm, 12 mm, 16 mm, AND 24 mm EMBOSSED TAPE in millimeters (inches)								
TAPE SIZE	**D_0**	**E_1**	**P_0**	**P_2**	**A_0, B_0, K_0**	**S_1 MIN.**	**T MAX.**	**T_1 MAX.**
8 mm, 12 mm	1.5 ± 0.1 (0.059 ± 0.004)	1.75 ± 0.1 (0.069 ± 0.004)	4.0 ± 0.1 (0.157 ± 0.004)	2.0 ± 0.05 (0.079 ± 0.002)	(1)	0.6 (0.024)	0.600 (0.024)	0.1 (0.004)
16 mm, 24 mm				2.0 ± 0.1 (0.079 ± 0.004)				

For technical questions within your region: DiodesAmericas@vishay.com, DiodesAsia@vishay.com, DiodesEurope@vishay.com

THIS DOCUMENT IS SUBJECT TO CHANGE WITHOUT NOTICE. THE PRODUCTS DESCRIBED HEREIN AND THIS DOCUMENT ARE SUBJECT TO SPECIFIC DISCLAIMERS, SET FORTH AT www.vishay.com/doc?91000

DIMENSIONS in millimeters (inches)									
CASE TYPE	**TAPE SIZE**	**B_1 MAX.**	**D_1 MIN.**	**E_2 MIN.**	**F**	**P_1**	**R REF.**	**T_2 MAX.**	**W MAX.**
GL34 (DO-213AA)	8 (0.315)	4.2 (0.165)	1.0 (0.039)	6.25 (0.246)	3.5 ± 0.05 (0.138 ± 0.002)	4.0 ± 0.10 (0.157 ± 0.004)	20 (0.787)	2.4 (0.094)	8.3 (0.327)
MicroSMP (DO-219AB) / MicroSMF (DO-219AD)		3.28 (0.129)		6.05 (0.238)				1.919 (0.076)	
SMF (DO-219AB)		-						1.8 (0.07)	8.2 (0.322)
GL34 (DO-213AA)	12 (0.472)	8.2 (0.323)	1.5 (0.059)	10.25 (0.404)	5.5 ± 0.05 (0.217 ± 0.002)		25 (0.984)	4.5 (0.177)	12.3 (0.484)
GF1 (DO-214BA)								3.25 (0.128)	
SMA (DO-214AC)								2.64 (0.104)	
SMP (DO-220AA)								1.84 (0.072)	
SMPC (TO-277A)		7.0 (0.276)				8.0 ± 0.10 (0.315 ± 0.004)		1.43 (0.056)	
SMB (DO-214AA) / SMBG (DO-215AA)		8.2 (0.323)						2.77 (0.109)	
SMC (DO-214AB) / SMCG (DO-215AB)	16 (0.630)	12.1 (0.476)		14.25 (0.561)	7.5 ± 0.1 (0.295 ± 0.004)			2.64 (0.104)	16.3 (0.642)
SlimDPAK (TO-252AE)								2.0 (0.079)	
DFS						12.0 ± 0.10 (0.472 ± 0.004)		3.91 (0.154)	
D^2PAK (TO-263AB) DO-218AB / AC	24 (0.945)	20.1 (0.791)		22.25 (0.876)	11.5 ± 0.1 (0.453 ± 0.004)	16.0 ± 0.10 (0.630 ± 0.004)		5.31 (0.209)	24.3 (0.957)
SMPD (TO-263AC)						12.0 ± 0.10 (0.472 ± 0.004)		2.35 (0.093)	
SlimSMA (DO-221AC) / SMPA (DO-221BC)	12 (0.472)	6.2 (0.244)		10.25 (0.404)	5.5 ± 0.05 (0.217 ± 0.002)	4.0 ± 0.10 (0.157 ± 0.004)		1.53 (0.060)	12.3 (0.484)
SlimSMAW (DO-221AD)								1.61 (0.063)	
FlatPAK 5 x 6		6.4 (0.252)				8.0 ± 0.10 (0.315 ± 0.004)		1.20 ± 0.10 (0.047 ± 0.004)	

Notes

(1) A_0, B_0, and K_0 are determined by the maximum dimensions of the component size. The clearance between the component and the cavity must be within 0.05 mm (0.002") min. to 0.5 mm (0.02") max. for 8 mm tape and 12 mm tape, 0.15 mm (0.066") min. to 0.90 mm (0.035") max. for 16 mm tape and 0.15 mm (0.006") min. to 1.0 mm (0.59") max. for 24 mm tape

(2) All surface mount components are packed in accordance with EIA standard 481-E

For technical questions within your region: DiodesAmericas@vishay.com, DiodesAsia@vishay.com, DiodesEurope@vishay.com
THIS DOCUMENT IS SUBJECT TO CHANGE WITHOUT NOTICE. THE PRODUCTS DESCRIBED HEREIN AND THIS DOCUMENT ARE SUBJECT TO SPECIFIC DISCLAIMERS, SET FORTH AT www.vishay.com/doc?91000

Looking for pricing, stock, or lifecycle information?

Click below to explore more details on WIN SOURCE:

- View SMAJ130A-E3/61 on WIN SOURCE
- Vishay Information

Optimize Your Supply Chain with WIN SOURCE Solutions

- Global Sourcing Solution
- Obsolete Management
- Cost Control Management
- Shortage Management
- Alternative Solution
- Excess Inventory Management