THE DATASHEET OF

SM15T15A-E3/57T

www.win-source.net 0086-755-83957316

Surface Mount TRANSZORB® Transient Voltage Suppressors



SMC (DO-214AB)

PRIMARY CHARACTERISTICS	
V_{WM}	5.8 V to 188 V
V_{BR} uni-directional	6.8 V to 220 V
V_{BR} bi-directional	6.8 V to 220 V
P_{PPM}	1500 W
P_D	6.5 W
I_{FSM} (uni-directional only)	200 A
T_J max.	150 °C
Polarity	Uni-directional, bi-directional
Package	SMC (DO-214AB)

DEVICES FOR BI-DIRECTION APPLICATIONS

For bi-directional devices use CA suffix (e.g. SM15T12CA). Electrical characteristics apply in both directions.

APPLICATION NOTES

A 1500 W (SMC) device is normally selected when the threat of transients is from lightning induced transients, conducted via external leads or I/O lines. It is also used to protect against switching transients induced by large coils or industrial motors. Source impedance at component level in a system is usually high enough to limit the current within the peak pulse current (I_{PP}) rating of this series. In an overstress condition, the failure mode is a short circuit.

FEATURES

RoHS COMPLIANT
HALOGEN FREE Available

- Low profile package
- Ideal for automated placement
- Glass passivated chip junction
- Available in uni-directional and bi-directional
- 1500 W peak pulse power capability with a 10/1000 µs waveform
- Excellent clamping capability
- Low inductance
- Meets MSL level 1, per J-STD-020, LF maximum peak of 260 °C
- AEC-Q101 qualified available
  - Automotive ordering code: base P/NHE3 or P/NHM3
- Material categorization: for definitions of compliance please see www.vishay.com/doc?99912

TYPICAL APPLICATIONS

Use in sensitive electronics protection against voltage transients induced by inductive load switching and lighting on ICs, MOSFET, signal lines of sensor units for consumer, computer, industrial, automotive, and telecommunication.

MECHANICAL DATA

Case: SMC (DO-214AB)
Molding compound meets UL 94 V-0 flammability rating
Base P/N-E3 - RoHS-compliant and commercial grade
Base P/N-M3 - halogen-free, RoHS-compliant, commercial grade
Base P/NHE3_X - RoHS-compliant and AEC-Q101 qualified
Base P/NHM3_X - halogen-free, RoHS-compliant, and AEC-Q101 qualified
("_X" denotes revision code e.g. A, B, ...)

Terminals: matte tin plated leads, solderable per J-STD-002 and JESD 22-B102
E3, M3, HE3, and HM3 suffix meets JESD 201 class 2 whisker test

Polarity: for uni-directional types the band denotes cathode end, no marking on bi-directional types

MAXIMUM RATINGS (T_A = 25 °C unless otherwise noted)			
PARAMETER	**SYMBOL**	**VALUE**	**UNIT**
Peak power dissipation with a 10/1000 µs waveform (1)(2) (fig. 1)	P_{PPM}	1500	W
Peak pulse current with a 10/1000 µs waveform (1) (fig. 3)	I_{PPM}	See next table	A
Power dissipation on infinite heatsink at T_A = 50 °C	P_D	6.5	W
Peak forward surge current 10 ms single half sine-wave uni-directional only (2)	I_{FSM}	200	A
Operating junction and storage temperature range	T_J, T_{STG}	-65 to +150	°C

Notes

(1) Non-repetitive current pulse, per fig. 3 and derated above T_A = 25 °C per fig. 2
(2) Mounted on 0.31" x 0.31" (8.0 mm x 8.0 mm) copper pads to each terminal

For technical questions within your region: DiodesAmericas@vishay.com, DiodesAsia@vishay.com, DiodesEurope@vishay.com
THIS DOCUMENT IS SUBJECT TO CHANGE WITHOUT NOTICE. THE PRODUCTS DESCRIBED HEREIN AND THIS DOCUMENT ARE SUBJECT TO SPECIFIC DISCLAIMERS, SET FORTH AT www.vishay.com/doc?91000

ELECTRICAL CHARACTERISTICS (T_A = 25 °C unless otherwise noted)

TYPE (1)	DEVICE MARKING CODE		BREAKDOWN VOLTAGE V_{BR} AT I_T (2) (V)		TEST CURRENT I_T (mA)	STAND-OFF VOLTAGE V_{RM} (V)	LEAKAGE CURRENT I_{RM} AT V_{RM} I_D (3) (µA)	CLAMPING VOLTAGE V_C AT I_{PPM} (10/1000 µs)		CLAMPING VOLTAGE V_C AT I_{PPM} (8/20 µs)		α_T MAX. 10^{-4}/°C
	UNI	BI	MIN.	MAX.				(V)	(A)	(V)	(A)	
SM15T6V8A	GDE7	GDE7	6.45	7.14	10	5.80	1000	10.5	143	13.4	746	5.7
SM15T7V5A	GDK7	BDK7	7.13	7.88	10	6.40	500	11.3	132	14.5	690	6.1
SM15T10A	GDT7	BDT7	9.50	10.5	1.0	8.55	10	14.5	103	18.6	538	7.3
SM15T12A	GDX7	BDX7	11.4	12.6	1.0	10.2	5.0	16.7	90.0	21.7	461	7.8
SM15T15A	GEG7	GEG7	14.3	15.8	1.0	12.8	1.0	21.2	71.0	27.2	368	8.4
SM15T18A	GEM7	BEM7	17.1	18.9	1.0	15.3	1.0	25.2	59.5	32.5	308	8.8
SM15T22A	GET7	BET7	20.9	23.1	1.0	18.8	1.0	30.6	49.0	39.3	254	9.2
SM15T24A	GEV7	GEV7	22.8	25.2	1.0	20.5	1.0	33.2	45.0	42.8	234	9.4
SM15T27A	GEX7	BEX7	25.7	28.4	1.0	23.1	1.0	37.5	40.0	48.3	207	9.6
SM15T30A	GFE7	BFE7	28.5	31.5	1.0	25.6	1.0	41.5	36.0	53.5	187	9.7
SM15T33A	GFG7	GFG7	31.4	34.7	1.0	28.2	1.0	45.7	33.0	59.0	169	9.8
SM15T36A	GFK7	BFK7	34.2	37.8	1.0	30.8	1.0	49.9	30.0	64.3	156	9.9
SM15T39A	GFM7	BFM7	37.1	41.0	1.0	33.3	1.0	53.9	28.0	69.7	143	10.0
SM15T68A	GGG7	GGG7	64.6	71.4	1.0	58.1	1.0	92.0	16.3	121	83	10.4
SM15T100A	GGV7	GGV7	95.0	105	1.0	85.5	1.0	137	11.0	178	56	10.6
SM15T150A	GHK7	GHK7	143	158	1.0	128	1.0	207	7.20	265	38	10.8
SM15T200A	GHR7	GHR7	190	210	1.0	171	1.0	274	5.50	353	28	10.8
SM15T220A	GHR8	GHR8	209	231	1.0	188	1.0	328	4.60	388	26	10.8

Notes

(1) For bi-directional devices add suffix “CA” instead of “A”

(2) V_{BR} measured after I_T applied for 300 µs square wave pulse

(3) For bi-polar devices with V_{RM} = 10 V or under, the I_{RM} limit is doubled

THERMAL CHARACTERISTICS (T_A = 25 °C unless otherwise noted)

PARAMETER	SYMBOL	VALUE	UNIT
Typical thermal resistance, junction to ambient air (1)	$R_{\theta JA}$	75	°C/ W
Typical thermal resistance, junction to lead	$R_{\theta JL}$	15	

Note

(1) Mounted on minimum recommended pad layout

ORDERING INFORMATION (Example)

PREFERRED P/N	UNIT WEIGHT (g)	PREFERRED PACKAGE CODE	BASE QUANTITY	DELIVERY MODE
SM15T10A-E3/57T	0.211	57T	850	7" diameter plastic tape and reel
SM15T10A-M3/57T				
SM15T10A-E3/9AT	0.211	9AT	3500	13" diameter plastic tape and reel
SM15T10A-M3/9AT				
SM15T10AHE3_A/H (1)	0.211	H	850	7" diameter plastic tape and reel
SM15T10AHM3_A/H (1)				
SM15T10AHE3_A/I (1)	0.211	I	3500	13" diameter plastic tape and reel
SM15T10AHM3_A/I (1)				

Note

(1) AEC-Q101 qualified

For technical questions within your region: DiodesAmericas@vishay.com, DiodesAsia@vishay.com, DiodesEurope@vishay.com
THIS DOCUMENT IS SUBJECT TO CHANGE WITHOUT NOTICE. THE PRODUCTS DESCRIBED HEREIN AND THIS DOCUMENT ARE SUBJECT TO SPECIFIC DISCLAIMERS, SET FORTH AT www.vishay.com/doc?91000

RATINGS AND CHARACTERISTICS CURVES (T_A = 25 °C unless otherwise noted)

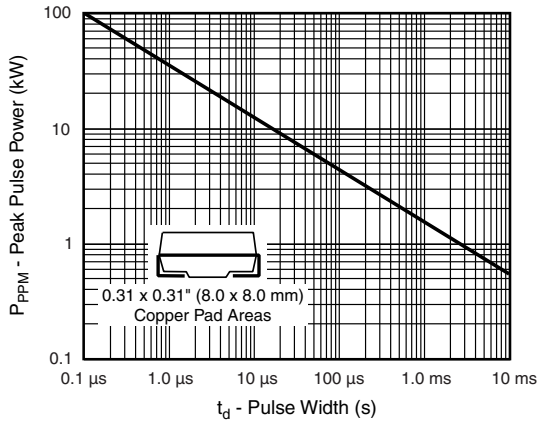

Fig. 1 - Peak Pulse Power Rating Curve

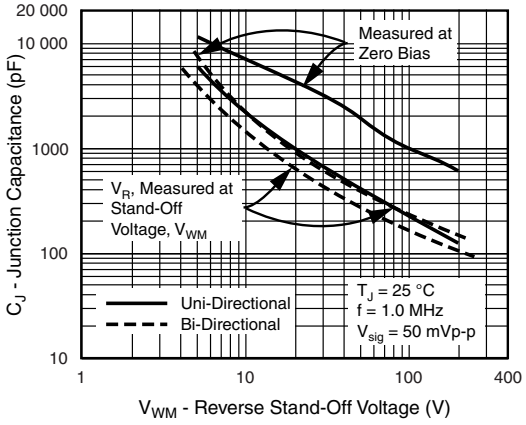

Fig. 4 - Typical Junction Capacitance Uni-Directional

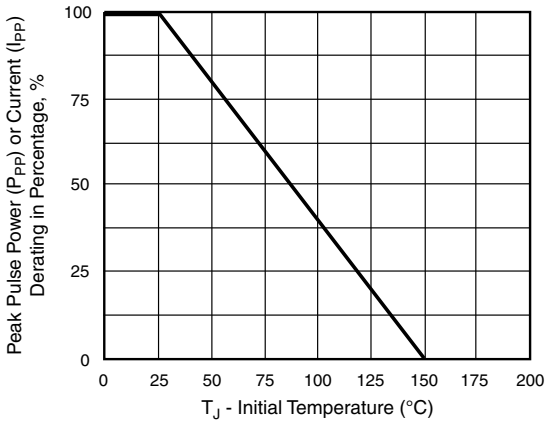

Fig. 2 - Pulse Power or Current vs. Initial Junction Temperature

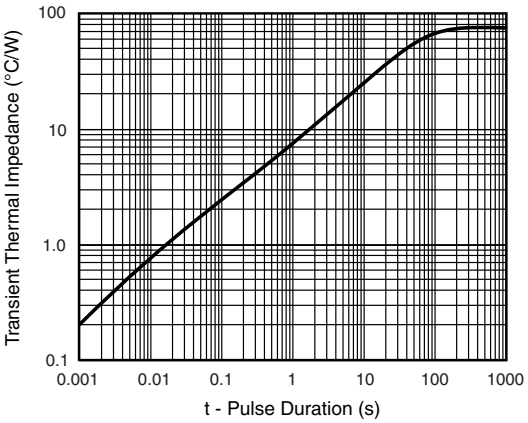

Fig. 5 - Typical Transient Thermal Impedance

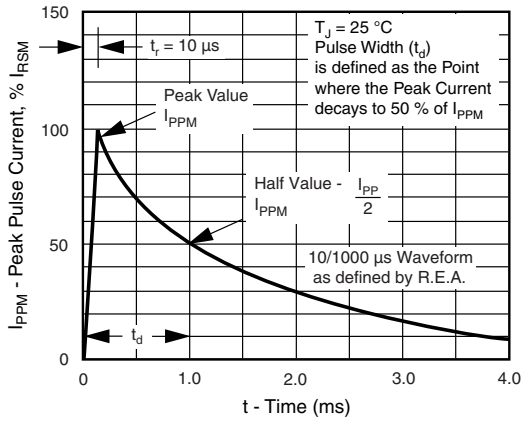

Fig. 3 - Pulse Waveform

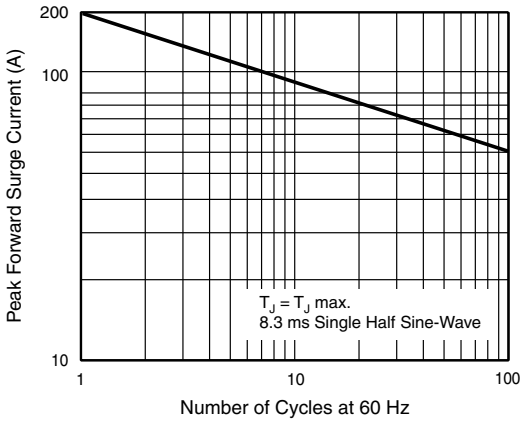

Fig. 6 - Maximum Non-Repetitive Forward Surge Current
Uni-Directional Use Only

For technical questions within your region: DiodesAmericas@vishay.com, DiodesAsia@vishay.com, DiodesEurope@vishay.com

THIS DOCUMENT IS SUBJECT TO CHANGE WITHOUT NOTICE. THE PRODUCTS DESCRIBED HEREIN AND THIS DOCUMENT ARE SUBJECT TO SPECIFIC DISCLAIMERS, SET FORTH AT www.vishay.com/doc?91000

PACKAGE OUTLINE DIMENSIONS in inches (millimeters)

SMC (DO-214AB)

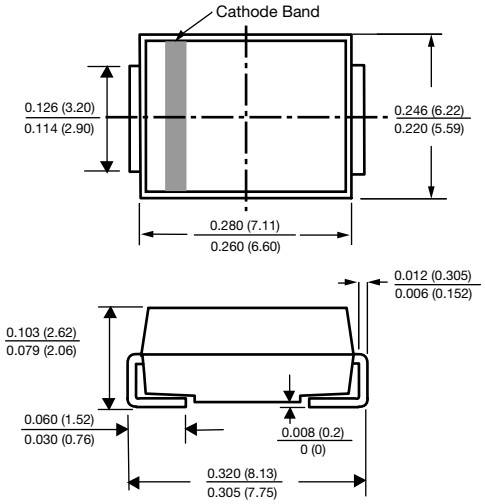

Mounting Pad Layout

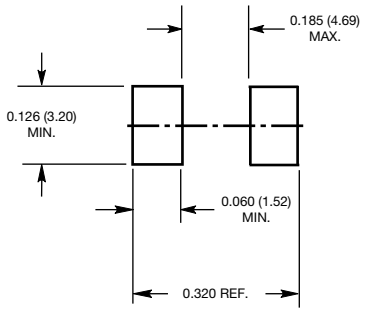

For technical questions within your region: DiodesAmericas@vishay.com, DiodesAsia@vishay.com, DiodesEurope@vishay.com

THIS DOCUMENT IS SUBJECT TO CHANGE WITHOUT NOTICE. THE PRODUCTS DESCRIBED HEREIN AND THIS DOCUMENT ARE SUBJECT TO SPECIFIC DISCLAIMERS, SET FORTH AT www.vishay.com/doc?91000

Disclaimer

ALL PRODUCT, PRODUCT SPECIFICATIONS AND DATA ARE SUBJECT TO CHANGE WITHOUT NOTICE TO IMPROVE RELIABILITY, FUNCTION OR DESIGN OR OTHERWISE.

Vishay Intertechnology, Inc., its affiliates, agents, and employees, and all persons acting on its or their behalf (collectively, “Vishay”), disclaim any and all liability for any errors, inaccuracies or incompleteness contained in any datasheet or in any other disclosure relating to any product.

Vishay makes no warranty, representation or guarantee regarding the suitability of the products for any particular purpose or the continuing production of any product. To the maximum extent permitted by applicable law, Vishay disclaims (i) any and all liability arising out of the application or use of any product, (ii) any and all liability, including without limitation special, consequential or incidental damages, and (iii) any and all implied warranties, including warranties of fitness for particular purpose, non-infringement and merchantability.

Statements regarding the suitability of products for certain types of applications are based on Vishay’s knowledge of typical requirements that are often placed on Vishay products in generic applications. Such statements are not binding statements about the suitability of products for a particular application. It is the customer’s responsibility to validate that a particular product with the properties described in the product specification is suitable for use in a particular application. Parameters provided in datasheets and / or specifications may vary in different applications and performance may vary over time. All operating parameters, including typical parameters, must be validated for each customer application by the customer’s technical experts. Product specifications do not expand or otherwise modify Vishay’s terms and conditions of purchase, including but not limited to the warranty expressed therein.

Except as expressly indicated in writing, Vishay products are not designed for use in medical, life-saving, or life-sustaining applications or for any other application in which the failure of the Vishay product could result in personal injury or death. Customers using or selling Vishay products not expressly indicated for use in such applications do so at their own risk. Please contact authorized Vishay personnel to obtain written terms and conditions regarding products designed for such applications.

No license, express or implied, by estoppel or otherwise, to any intellectual property rights is granted by this document or by any conduct of Vishay. Product names and markings noted herein may be trademarks of their respective owners.

© 2019 VISHAY INTERTECHNOLOGY, INC. ALL RIGHTS RESERVED

Looking for pricing, stock, or lifecycle information?

Click below to explore more details on WIN SOURCE:

- View SM15T15A-E3/57T on WIN SOURCE
- Vishay Information

Optimize Your Supply Chain with WIN SOURCE Solutions

- Global Sourcing Solution
- Obsolete Management
- Cost Control Management
- Shortage Management
- Alternative Solution
- Excess Inventory Management