WINSOURCE ELECTRONICS

THE DATASHEET OF

173D106X9035X

Solid-Electrolyte TANTALEX™ Capacitors, Axial-Leaded, Molded Case

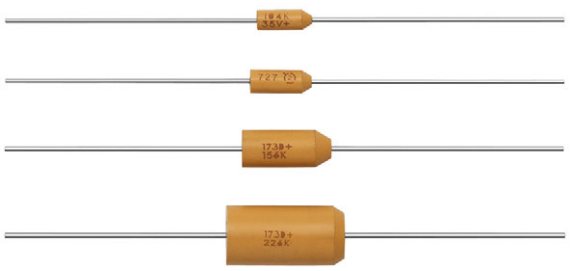

FEATURES

- Axial through-hole terminations: tin / lead (SnPb), 100 % tin (RoHS-compliant)
- Miniature axial-lead capacitors available in 5 sizes
- Precision molded in gold colored, flame retardant, thermosetting epoxy resin
- Laser marked for improved legibility and tapered end of case provides easy identification of positive terminal
- Standard orders are lead taped and reeled; orders under 500 are taped only
- Material categorization: for definitions of compliance please see www.vishay.com/doc?99912

Pb-free Available

RoHS* Available

Note

* This datasheet provides information about parts that are RoHS-compliant and / or parts that are non RoHS-compliant. For example, parts with lead (Pb) terminations are not RoHS-compliant. Please see the information / tables in this datasheet for details

LINKS TO ADDITIONAL RESOURCES

3D Models

PERFORMANCE CHARACTERISTICS

Operating Temperature: -55 °C to +85 °C (to +125 °C with voltage derating)

Capacitance Tolerance: at 120 Hz, +25 °C. ± 20 %, ± 10 % standard ± 5 % available as special

Capacitance Range: 0.10 µF to 330 µF.

Voltage Rating: 2 V_{DC} to 50 V_{DC}.

Dissipation Factor: at 120 Hz, +25 °C. Dissipation factor, as determined from the expression 2πfRC, shall not exceed the values listed in the Standard Ratings table.

DC Leakage Current (DCL Max.):

at +25 °C: leakage current shall not exceed the values listed in the Standard Ratings table.

APPLICATIONS

Designed for high performance automotive, industrial and commercial electronic equipment.

at +85 °C: leakage current shall not exceed 10 times the values listed in the Standard Ratings table.

at +125 °C: leakage shall not exceed 15 times the values listed in the Standard Ratings table.

Life Test: capacitors shall withstand rated DC voltage applied at +85 °C for 2000 h and for 1000 h applied at + 25 °C derated voltage.

Following the life test:

1. DCL shall not exceed 125 % of the initial requirements.
2. Dissipation factor shall meet the initial requirement.
3. Change in capacitance shall not exceed ± 10 %.

ORDERING INFORMATION

173D	335	X9	006	U	W	E3
MODEL	CAPACITANCE	CAPACITANCE TOLERANCE	DC VOLTAGE RATING AT +85 °C	CASE CODE	PACKAGING	RoHS-COMPLIANT
	This is expressed in picofarads. The first two digits are the significant figures. The third is the number of zeros to follow.	X0 = ± 20 % X9 = ± 10 % *X5 = ± 5 % * Special order	This is expressed in volts. To complete the three-digit block, zeros precede the voltage rating.	See Ratings and Case Codes table	W = tape and reel Blank = ammo pack	E3 = 100 % tin termination (RoHS-compliant) Blank = SnPb termination

DIMENSIONS in inches [millimeters]

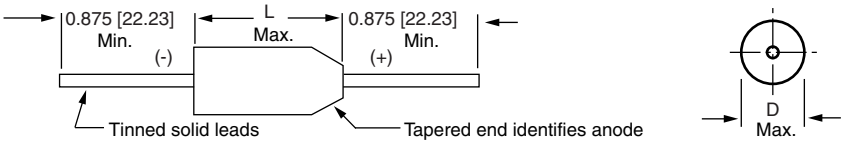

CASE CODE	D (MAX.)	L (MAX.)	LEAD DIAMETER
U	0.095 [2.41]	0.260 [6.60]	0.020 [0.51]
V	0.110 [2.79]	0.290 [7.37]	0.020 [0.51]
W	0.180 [4.57]	0.345 [8.76]	0.020 [0.51]
X	0.180 [4.57]	0.420 [10.67]	0.020 [0.51]
Y	0.280 [7.11]	0.550 [13.97]	0.025 [0.64]

For technical questions, contact: tantalum@vishay.com

THIS DOCUMENT IS SUBJECT TO CHANGE WITHOUT NOTICE. THE PRODUCTS DESCRIBED HEREIN AND THIS DOCUMENT ARE SUBJECT TO SPECIFIC DISCLAIMERS, SET FORTH AT www.vishay.com/doc?91000

RATINGS AND CASE CODES									
µF	2 V	4 V	6 V	10 V	15 V	20 V	25 V	35 V	50 V
0.10								U	U
0.12								U	U
0.15								U	U
0.18								U	U
0.22								U	U
0.27								U	U
0.33								U	V
0.39								U	V
0.47							U	U	V
0.56							U	V	V
0.68							U	V	V
0.82							U	V	V
1.0					U	U	U	V	V
1.2						U	V	V	W
1.5					U	U	V	V	W
1.8					U	V	V	W	W
2.2				U	U	U / V	V	W	W
2.7				U	V	V	V	W	X
3.3			U	U	V	V	V	W	X
3.9			U	V	V	V	W	W	X
4.7		U	U	V	V	V	W	W	X
5.6		U	V	V	V	W	W	X	Y
6.8	U	U	V	V	V	W	W	X	Y
8.2	U	V	V	V	W	W	W	X	Y
10	U	V	V	V	W	W	W	X	Y
12	V	V	V	W	W	X	X	Y	Y
15	V	V	V	W	W	X	X	Y	Y
18	V	V	W	W	X	X	Y	Y	Y
22	V	V	W	W	X	X	Y	Y	Y
27	V	W	W	X	X	Y	Y	Y	
33	V	W	W	X	X	Y	Y	Y	
39	W	W	X	X	Y	Y	Y	Y	
47	W	W	X	X	Y	Y	Y	Y	
56	W	X	X	Y	Y	Y			
68	W	X	X	Y	Y	Y			
82			Y	Y	Y	Y			
100			Y	Y	Y	Y			
120			Y	Y	Y				
150			Y	Y	Y				
180			Y	Y					
220			Y	Y					
270			Y						
330			Y						

For technical questions, contact: tantalum@vishay.com
THIS DOCUMENT IS SUBJECT TO CHANGE WITHOUT NOTICE. THE PRODUCTS DESCRIBED HEREIN AND THIS DOCUMENT ARE SUBJECT TO SPECIFIC DISCLAIMERS, SET FORTH AT www.vishay.com/doc?91000

MARKING	
PARAMETER	**EXAMPLE**
Product type	173D
Polarity	+
Capacitance code, pF	156
Capacitance tolerance code	K
Voltage	25 V
Date code	1209
Lead (Pb)-free indicator (1)	L
Vishay marking	2

Note

(1) On big case sizes (W,X,Y) lead free indicator is printed after date code, for example 1209L

STANDARD RATINGS

CAPACITANCE (µF)	CASE CODE	PART NUMBER	MAX. DCL AT +25 °C (µA)	MAX. DF AT +25 °C 120 Hz (%)
2 V_{DC} AT +85 °C, SURGE = 2.5 V; 1.5 V_{DC} AT +125 °C, SURGE = 1.8 V				
6.8	U	173D685(1)002U(2)(3)	0.5	10
8.2	U	173D825(1)002U(2)(3)	0.5	10
10	U	173D106(1)002U(2)(3)	0.5	10
12	V	173D126(1)002V(2)(3)	0.5	10
15	V	173D156(1)002V(2)(3)	0.5	10
18	V	173D186(1)002V(2)(3)	0.5	10
22	V	173D226(1)002V(2)(3)	0.5	10
27	V	173D276(1)002V(2)(3)	0.5	10
33	V	173D336(1)002V(2)(3)	0.5	10
39	W	173D396(1)002W(2)(3)	0.6	10
47	W	173D476(1)002W(2)(3)	0.8	10
56	W	173D566(1)002W(2)(3)	0.9	10
68	W	173D686(1)002W(2)(3)	1.1	10
4 V_{DC} AT +85 °C, SURGE = 5 V; 2.5 V_{DC} AT +125 °C, SURGE = 3 V				
4.7	U	173D475(1)004U(2)(3)	0.5	8
5.6	U	173D565(1)004U(2)(3)	0.5	8
6.8	U	173D685(1)004U(2)(3)	0.5	8
8.2	V	173D825(1)004V(2)(3)	0.5	8
10	V	173D106(1)004V(2)(3)	0.5	8
12	V	173D126(1)004V(2)(3)	0.5	8
15	V	173D156(1)004V(2)(3)	0.5	8
18	V	173D186(1)004V(2)(3)	0.6	8
22	V	173D226(1)004V(2)(3)	0.7	8
27	W	173D276(1)004W(2)(3)	0.9	8
33	W	173D336(1)004W(2)(3)	1.1	8
39	W	173D396(1)004W(2)(3)	1.2	8
47	W	173D476(1)004W(2)(3)	1.5	8
56	X	173D566(1)004X(2)(3)	1.5	8
68	X	173D686(1)004X(2)(3)	2.2	8

Note

- Part number definition:
  (1) For 10 % tolerance specify “X9”; for 20 % specify “X0”; for 5 % specify “X5” (special order)
  (2) Packaging code: for reel 13" specify W, leave blank for ammo pack
  (3) Termination: for 100 % tin specify E3, for SnPb leave blank

For technical questions, contact: tantalum@vishay.com
THIS DOCUMENT IS SUBJECT TO CHANGE WITHOUT NOTICE. THE PRODUCTS DESCRIBED HEREIN AND THIS DOCUMENT ARE SUBJECT TO SPECIFIC DISCLAIMERS, SET FORTH AT www.vishay.com/doc?91000

STANDARD RATINGS

CAPACITANCE (µF)	CASE CODE	PART NUMBER	MAX. DCL AT +25 °C (µA)	MAX. DF AT +25 °C 120 Hz (%)
6 V_{DC} AT +85 °C, SURGE = 8 V; 4 V_{DC} AT +125 °C, SURGE = 5 V				
3.3	U	173D335(1)006U(2)(3)	0.5	4
3.9	U	173D395(1)006U(2)(3)	0.5	4
4.7	U	173D475(1)006U(2)(3)	0.5	4
5.6	V	173D565(1)006V(2)(3)	0.5	4
6.8	V	173D685(1)006V(2)(3)	0.5	6
8.2	V	173D825(1)006V(2)(3)	0.5	6
10	V	173D106(1)006V(2)(3)	0.5	6
12	V	173D126(1)006V(2)(3)	0.6	6
15	V	173D156(1)006V(2)(3)	0.7	6
18	W	173D186(1)006W(2)(3)	0.9	6
22	W	173D226(1)006W(2)(3)	1.1	6
27	W	173D276(1)006W(2)(3)	1.3	6
33	W	173D336(1)006W(2)(3)	1.5	6
39	X	173D396(1)006X(2)(3)	1.6	6
47	X	173D476(1)006X(2)(3)	2.3	6
56	X	173D566(1)006X(2)(3)	2.7	6
68	X	173D686(1)006X(2)(3)	3.3	6
82	Y	173D826(1)006Y(2)(3)	3.9	8
100	Y	173D107(1)006Y(2)(3)	4.8	8
120	Y	173D127(1)006Y(2)(3)	5.0	8
150	Y	173D157(1)006Y(2)(3)	5.0	8
180	Y	173D187(1)006Y(2)(3)	8.6	8
220	Y	173D227(1)006Y(2)(3)	10.0	8
270	Y	173D277(1)006Y(2)(3)	10.0	8
330	Y	173D337(1)006Y(2)(3)	10.0	8
10 V_{DC} AT +85 °C, SURGE = 13 V; 7 V_{DC} AT +125 °C, SURGE = 9 V				
2.2	U	173D225(1)010U(2)(3)	0.5	4
2.7	U	173D275(1)010U(2)(3)	0.5	4
3.3	U	173D335(1)010U(2)(3)	0.5	4
3.9	V	173D395(1)010V(2)(3)	0.5	4
4.7	V	173D475(1)010V(2)(3)	0.5	4
5.6	V	173D565(1)010V(2)(3)	0.5	4
6.8	V	173D685(1)010V(2)(3)	0.5	6
8.2	V	173D825(1)010V(2)(3)	0.7	6
10	V	173D106(1)010V(2)(3)	0.8	6
12	W	173D126(1)010W(2)(3)	1.0	6
15	W	173D156(1)010W(2)(3)	1.2	6
18	W	173D186(1)010W(2)(3)	1.4	6
22	W	173D226(1)010W(2)(3)	1.5	6
27	X	173D276(1)010X(2)(3)	2.2	6
33	X	173D336(1)010X(2)(3)	2.6	6
39	X	173D396(1)010X(2)(3)	3.1	6
47	X	173D476(1)010X(2)(3)	3.8	6
56	Y	173D566(1)010Y(2)(3)	4.4	6
68	Y	173D686(1)010Y(2)(3)	5.0	6
82	Y	173D826(1)010Y(2)(3)	5.0	8
100	Y	173D107(1)010Y(2)(3)	8.0	8

Note

- Part number definition:
  (1) For 10 % tolerance specify “X9”; for 20 % specify “X0”; for 5 % specify “X5” (special order)
  (2) Packaging code: for reel 13" specify W, leave blank for ammo pack
  (3) Termination: for 100 % tin specify E3, for SnPb leave blank

For technical questions, contact: tantalum@vishay.com
THIS DOCUMENT IS SUBJECT TO CHANGE WITHOUT NOTICE. THE PRODUCTS DESCRIBED HEREIN AND THIS DOCUMENT ARE SUBJECT TO SPECIFIC DISCLAIMERS, SET FORTH AT www.vishay.com/doc?91000

STANDARD RATINGS

CAPACITANCE (µF)	CASE CODE	PART NUMBER	MAX. DCL AT +25 °C (µA)	MAX. DF AT +25 °C 120 Hz (%)
10 V_{DC} AT +85 °C, SURGE = 13 V; 7 V_{DC} AT +125 °C, SURGE = 9 V				
120	Y	173D127(1)010Y(2)(3)	9.6	8
150	Y	173D157(1)010Y(2)(3)	10.0	8
180	Y	173D187(1)010Y(2)(3)	10.0	8
220	Y	173D227(1)010Y(2)(3)	10.0	8
15 V_{DC} AT +85 °C, SURGE = 20 V; 10 V_{DC} AT +125 °C, SURGE = 12 V				
1.0	U	173D105(1)015U(2)(3)	0.5	4
1.5	U	173D155(1)015U(2)(3)	0.5	4
1.8	U	173D185(1)015U(2)(3)	0.5	4
2.2	U	173D225(1)015U(2)(3)	0.5	4
2.7	V	173D275(1)015V(2)(3)	0.5	4
3.3	V	173D335(1)015V(2)(3)	0.5	4
3.9	V	173D395(1)015V(2)(3)	0.5	4
4.7	V	173D475(1)015V(2)(3)	0.6	4
5.6	V	173D565(1)015V(2)(3)	0.7	4
6.8	V	173D685(1)015V(2)(3)	0.8	6
8.2	W	173D825(1)015W(2)(3)	1.0	6
10	W	173D106(1)015W(2)(3)	1.2	6
12	W	173D126(1)015W(2)(3)	1.4	6
15	W	173D156(1)015W(2)(3)	1.5	6
18	X	173D186(1)015X(2)(3)	2.2	6
22	X	173D226(1)015X(2)(3)	2.6	6
27	X	173D276(1)015X(2)(3)	3.2	6
33	X	173D336(1)015X(2)(3)	4.0	6
39	Y	173D396(1)015Y(2)(3)	4.7	6
47	Y	173D476(1)015Y(2)(3)	5.0	6
56	Y	173D566(1)015Y(2)(3)	6.7	6
68	Y	173D686(1)015Y(2)(3)	8.2	6
82	Y	173D826(1)015Y(2)(3)	9.8	8
100	Y	173D107(1)015Y(2)(3)	10.0	8
120	Y	173D127(1)015Y(2)(3)	10.0	8
150	Y	173D157(1)015Y(2)(3)	10.0	8
20 V_{DC} AT +85 °C, SURGE = 26 V; 13 V_{DC} AT +125 °C, SURGE = 16 V				
1.0	U	173D105(1)020U(2)(3)	0.5	4
1.2	U	173D125(1)020U(2)(3)	0.5	4
1.5	U	173D155(1)020U(2)(3)	0.5	4
1.8	V	173D185(1)020V(2)(3)	0.5	4
2.2	U	173D225(1)020U(2)(3)	0.5	4
2.2	V	173D225(1)020V(2)(3)	0.5	4
2.7	V	173D275(1)020V(2)(3)	0.5	4
3.3	V	173D335(1)020V(2)(3)	0.5	4
3.9	V	173D395(1)020V(2)(3)	0.6	4
4.7	V	173D475(1)020V(2)(3)	0.8	4
5.6	W	173D565(1)020W(2)(3)	0.9	4

Note

- Part number definition:
  (1) For 10 % tolerance specify “X9”; for 20 % specify “X0”; for 5 % specify “X5” (special order)
  (2) Packaging code: for reel 13" specify W, leave blank for ammo pack
  (3) Termination: for 100 % tin specify E3, for SnPb leave blank

For technical questions, contact: tantalum@vishay.com
THIS DOCUMENT IS SUBJECT TO CHANGE WITHOUT NOTICE. THE PRODUCTS DESCRIBED HEREIN AND THIS DOCUMENT ARE SUBJECT TO SPECIFIC DISCLAIMERS, SET FORTH AT www.vishay.com/doc?91000

STANDARD RATINGS

CAPACITANCE (µF)	CASE CODE	PART NUMBER	MAX. DCL AT +25 °C (µA)	MAX. DF AT +25 °C 120 Hz (%)
20 V_{DC} AT +85 °C, SURGE = 26 V; 13 V_{DC} AT +125 °C, SURGE = 16 V				
6.8	W	173D685(1)020W(2)(3)	1.1	6
8.2	W	173D825(1)020W(2)(3)	1.3	6
10	W	173D106(1)020W(2)(3)	1.6	6
12	X	173D126(1)020X(2)(3)	1.9	6
15	X	173D156(1)020X(2)(3)	2.4	6
18	X	173D186(1)020X(2)(3)	2.9	6
22	X	173D226(1)020X(2)(3)	3.5	6
27	Y	173D276(1)020Y(2)(3)	4.3	6
33	Y	173D336(1)020Y(2)(3)	5.0	6
39	Y	173D396(1)020Y(2)(3)	6.2	6
47	Y	173D476(1)020Y(2)(3)	7.5	6
56	Y	173D566(1)020Y(2)(3)	8.9	6
68	Y	173D686(1)020Y(2)(3)	10.0	6
82	Y	173D826(1)020Y(2)(3)	10.0	6
100	Y	173D107(1)020Y(2)(3)	10.0	6
25 V_{DC} AT +85 °C, SURGE = 32 V; 17 V_{DC} AT +125 °C, SURGE = 21 V				
0.47	U	173D474(1)025U(2)(3)	0.5	3
0.56	U	173D564(1)025U(2)(3)	0.5	3
0.68	U	173D684(1)025U(2)(3)	0.5	3
0.82	U	173D824(1)025U(2)(3)	0.5	3
1.0	U	173D105(1)025U(2)(3)	0.5	3
1.2	V	173D125(1)025V(2)(3)	0.5	3
1.5	V	173D155(1)025V(2)(3)	0.5	3
1.8	V	173D185(1)025V(2)(3)	0.5	3
2.2	V	173D225(1)025V(2)(3)	0.5	3
2.7	V	173D275(1)025V(2)(3)	0.5	3
3.3	V	173D335(1)025V(2)(3)	0.7	3
3.9	W	173D395(1)025W(2)(3)	0.8	3
4.7	W	173D475(1)025W(2)(3)	0.9	4
5.6	W	173D565(1)025W(2)(3)	1.1	4
6.8	W	173D685(1)025W(2)(3)	1.4	4
8.2	W	173D825(1)025W(2)(3)	1.5	4
10	W	173D106(1)025W(2)(3)	1.5	4
12	X	173D126(1)025X(2)(3)	2.4	4
15	X	173D156(1)025X(2)(3)	3.0	4
18	Y	173D186(1)025Y(2)(3)	3.6	6
22	Y	173D226(1)025Y(2)(3)	4.4	6
27	Y	173D276(1)025Y(2)(3)	5.4	6
33	Y	173D336(1)025Y(2)(3)	6.6	6
39	Y	173D396(1)025Y(2)(3)	7.8	6
47	Y	173D476(1)025Y(2)(3)	9.4	6

Note

- Part number definition:
  (1) For 10 % tolerance specify “X9”; for 20 % specify “X0”; for 5 % specify “X5” (special order)
  (2) Packaging code: for reel 13" specify W, leave blank for ammo pack
  (3) Termination: for 100 % tin specify E3, for SnPb leave blank

For technical questions, contact: tantalum@vishay.com
THIS DOCUMENT IS SUBJECT TO CHANGE WITHOUT NOTICE. THE PRODUCTS DESCRIBED HEREIN AND THIS DOCUMENT ARE SUBJECT TO SPECIFIC DISCLAIMERS, SET FORTH AT www.vishay.com/doc?91000

STANDARD RATINGS

CAPACITANCE (µF)	CASE CODE	PART NUMBER	MAX. DCL AT +25 °C (µA)	MAX. DF AT +25 °C 120 Hz (%)
35 V_{DC} AT +85 °C, SURGE = 46 V; 23 V_{DC} AT +125 °C, SURGE = 28 V				
0.10	U	173D104(1)035U(2)(3)	0.5	3
0.12	U	173D124(1)035U(2)(3)	0.5	3
0.15	U	173D154(1)035U(2)(3)	0.5	3
0.18	U	173D184(1)035U(2)(3)	0.5	3
0.22	U	173D224(1)035U(2)(3)	0.5	3
0.27	U	173D274(1)035U(2)(3)	0.5	3
0.33	U	173D334(1)035U(2)(3)	0.5	3
0.39	U	173D394(1)035U(2)(3)	0.5	3
0.47	U	173D474(1)035U(2)(3)	0.5	3
0.56	V	173D564(1)035V(2)(3)	0.5	3
0.68	V	173D684(1)035V(2)(3)	0.5	3
0.82	V	173D824(1)035V(2)(3)	0.5	3
1.0	V	173D105(1)035V(2)(3)	0.5	3
1.2	V	173D125(1)035V(2)(3)	0.5	3
1.5	V	173D155(1)035V(2)(3)	0.5	3
1.8	W	173D185(1)035W(2)(3)	0.5	3
2.2	W	173D225(1)035W(2)(3)	0.6	3
2.7	W	173D275(1)035W(2)(3)	0.8	3
3.3	W	173D335(1)035W(2)(3)	0.9	4
3.9	W	173D395(1)035W(2)(3)	1.1	4
4.7	W	173D475(1)035W(2)(3)	1.3	4
5.6	X	173D565(1)035X(2)(3)	1.6	4
6.8	X	173D685(1)035X(2)(3)	1.9	4
8.2	X	173D825(1)035X(2)(3)	2.3	4
10	X	173D106(1)035X(2)(3)	2.8	4
12	Y	173D126(1)035Y(2)(3)	3.3	4
15	Y	173D156(1)035Y(2)(3)	4.2	4
18	Y	173D186(1)035Y(2)(3)	5.0	6
22	Y	173D226(1)035Y(2)(3)	6.2	6
27	Y	173D276(1)035Y(2)(3)	7.5	6
33	Y	173D336(1)035Y(2)(3)	9.2	6
39	Y	173D396(1)035Y(2)(3)	10.0	6
47	Y	173D476(1)035Y(2)(3)	10.0	6
50 V_{DC} AT +85 °C, SURGE = 65 V; 33 V_{DC} AT +125 °C, SURGE = 40 V				
0.10	U	173D104(1)050U(2)(3)	0.5	3
0.12	U	173D124(1)050U(2)(3)	0.5	3
0.15	U	173D154(1)050U(2)(3)	0.5	3
0.18	U	173D184(1)050U(2)(3)	0.5	3
0.22	U	173D224(1)050U(2)(3)	0.5	3
0.27	U	173D274(1)050U(2)(3)	0.5	3
0.33	V	173D334(1)050V(2)(3)	0.5	3
0.39	V	173D394(1)050V(2)(3)	0.5	3

Note

- Part number definition:
  (1) For 10 % tolerance specify “X9”; for 20 % specify “X0”; for 5 % specify “X5” (special order)
  (2) Packaging code: for reel 13" specify W, leave blank for ammo pack
  (3) Termination: for 100 % tin specify E3, for SnPb leave blank

For technical questions, contact: tantalum@vishay.com

THIS DOCUMENT IS SUBJECT TO CHANGE WITHOUT NOTICE. THE PRODUCTS DESCRIBED HEREIN AND THIS DOCUMENT ARE SUBJECT TO SPECIFIC DISCLAIMERS, SET FORTH AT www.vishay.com/doc?91000

STANDARD RATINGS

CAPACITANCE (µF)	CASE CODE	PART NUMBER	MAX. DCL AT +25 °C (µA)	MAX. DF AT +25 °C 120 Hz (%)
50 V_{DC} AT +85 °C, SURGE = 65 V; 33 V_{DC} AT +125 °C, SURGE = 40 V				
0.47	V	173D474(1)050V(2)(3)	0.5	3
0.56	V	173D564(1)050V(2)(3)	0.5	3
0.68	V	173D684(1)050V(2)(3)	0.5	3
0.82	V	173D824(1)050V(2)(3)	0.5	3
1.0	V	173D105(1)050V(2)(3)	0.5	3
1.2	W	173D125(1)050W(2)(3)	0.5	3
1.5	W	173D155(1)050W(2)(3)	0.6	3
1.8	W	173D185(1)050W(2)(3)	0.7	4
2.2	W	173D225(1)050W(2)(3)	0.9	4
2.7	X	173D275(1)050X(2)(3)	1.1	4
3.3	X	173D335(1)050X(2)(3)	1.3	4
3.9	X	173D395(1)050X(2)(3)	1.6	4
4.7	X	173D475(1)050X(2)(3)	1.9	4
5.6	Y	173D565(1)050Y(2)(3)	2.2	4
6.8	Y	173D685(1)050Y(2)(3)	2.7	4
8.2	Y	173D825(1)050Y(2)(3)	3.2	4
10	Y	173D106(1)050Y(2)(3)	4.0	6
12	Y	173D126(1)050Y(2)(3)	5.0	6
15	Y	173D156(1)050Y(2)(3)	6.0	6
18	Y	173D186(1)050Y(2)(3)	6.0	6
22	Y	173D226(1)050Y(2)(3)	11.0	6

Note

- Part number definition:
  (1) For 10 % tolerance specify “X9”; for 20 % specify “X0”; for 5 % specify “X5” (special order)
  (2) Packaging code: for reel 13" specify W, leave blank for ammo pack
  (3) Termination: for 100 % tin specify E3, for SnPb leave blank

For technical questions, contact: tantalum@vishay.com

THIS DOCUMENT IS SUBJECT TO CHANGE WITHOUT NOTICE. THE PRODUCTS DESCRIBED HEREIN AND THIS DOCUMENT ARE SUBJECT TO SPECIFIC DISCLAIMERS, SET FORTH AT www.vishay.com/doc?91000

TAPE AND REEL PACKAGING in inches [millimeters]

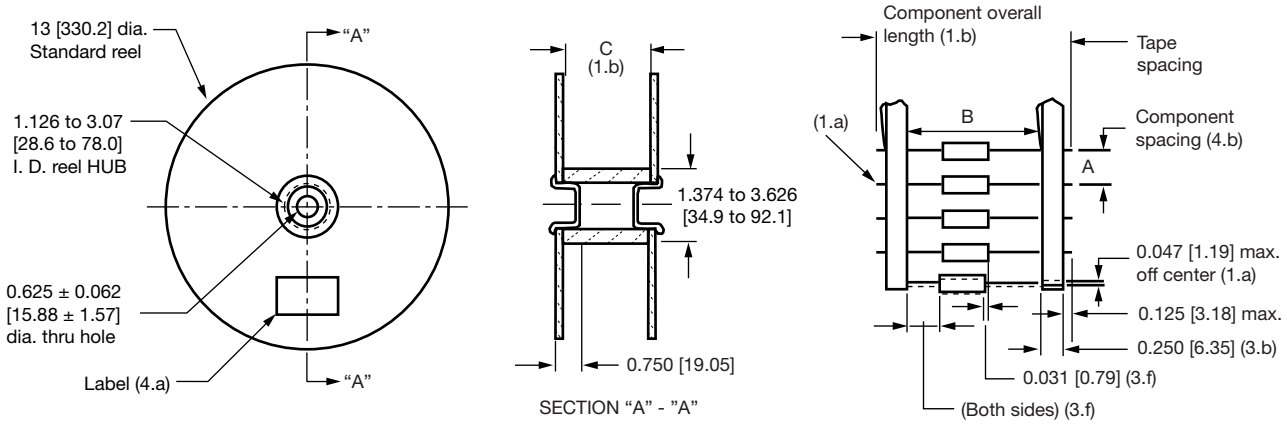

CASE CODE	UNITS PER REEL	COMPONENT SPACING	TAPE SPACING	UNITS PER AMMOPACK
		A	B	
U	4500	0.200 ± 0.015 [5.08 ± 3.81]	2.062 ± 0.062 [52.37 ± 1.57]	1000
V	4000			
W, X	2500			500
Y	500	0.400 ± 0.015 [10.16 ± 3.81]		

STANDARD REEL PACKAGING INFORMATION

1. Component Leads

a. Component leads shall not be bent beyond 0.047" [1.19 mm] maximum from their nominal position when measured from the leading edge of the component lead at the inside tape edge and at the lead egress from the component.

b. The "C" dimension shall be governed by the overall length of the reel packaged component. The distance between flanges shall be 0.125" to 0.250" [3.18 mm to 6.35 mm] greater than the overall component length.

2. Orientation

All polarized components must be oriented to one direction. The cathode lead tape shall be a color and the anode lead tape shall be white.

3. Reeling

a. Components on any reel shall not represent more than two date codes when date code identification is required.

b. Component leads shall be positioned between pairs of 0.250" [6.35 mm] tape.

c. The disposable reels have hubs and corrugated fibreboard flanges and core.

d. A minimum of 12" [304.8 mm] leader of tape shall be provided before the first and after the last component on the reel.

e. 50 lb to 60 lb. Kraft paper must be wound between layers of components as far as necessary for component protection. Width of paper to be 0.062" to 0.250" [1.57 mm to 6.35 mm] less than the "C" dimension of the reel.

f. Row components must be centered between tapes ± 0.047" [1.19 mm]. In addition, individual components may deviate from center of component row ± 0.031" [0.79 mm].

g. Staples shall not be used for splicing. Not more than 4 layers of tape shall be used in any splice area and no tape shall be offset from another by more than 0.031" [0.79 mm] non-cumulative. Tape splices shall overlap at least 6.0" [152.4 mm] for butt joints and at least 3" [76.2 mm] for lap joints and shall not be weaker than unspliced tape. Universal splicing clips may also be used.

h. Quantity per reel shall be controlled so that tape components and cover shall not extend beyond the smallest dimension of the flange (either across flats or diameter). Once the quantity per reel for each part number has been established, future orders for that part number shall be packaged in that quantity. When order release quantity is less than the established quantity, a standard commercial pack is to be used.

i. A maximum of 0.25 % of the components per reel quantity may be missing without consecutive missing components.

j. Adequate protection must be provided to prevent physical damage to both reel and components during shipment and storage.

For technical questions, contact: tantalum@vishay.com

THIS DOCUMENT IS SUBJECT TO CHANGE WITHOUT NOTICE. THE PRODUCTS DESCRIBED HEREIN AND THIS DOCUMENT ARE SUBJECT TO SPECIFIC DISCLAIMERS, SET FORTH AT www.vishay.com/doc?91000

GUIDE TO APPLICATION

1. **AC Ripple Current:** the maximum allowable ripple current shall be determined from the formula:

$$I_{RMS} = \sqrt{\frac{P_{max.}}{ESR}}$$

where,

P = maximum allowed power dissipation in W at +25 °C as given in the table in paragraph number 3.

ESR = the capacitor equivalent series resistance at the specified frequency.

2. **AC Ripple Voltage:** the maximum allowable ripple voltage shall be determined from the formula:

$$V_{RMS} = Z\sqrt{\frac{P_{max.}}{ESR}}$$

where,

P = maximum allowed power dissipation in W at +25 °C as given in the table in paragraph number 3.

ESR = the capacitor equivalent series resistance at the specified frequency.

Z = the capacitor impedance at the specified frequency.

3. **Power Dissipation:** the maximum allowed power dissipation ($P_{max.}$, W) at 25 °C. It is affected by the heat dissipating capability of the capacitor surface.

Table below shows $P_{max.}$ for each case size.

For more details refer to technical note “AC Ripple Current Calculations”, link is provided in the “Product Information” table.

173D CASE CODE	$P_{max.}$ AT +25 °C (W) IN FREE AIR
U	0.070
V	0.080
W	0.095
X	0.110
Y	0.160

4. **Temperature Derating:** if capacitors are to be operated at temperatures above +25 °C, the maximum allowed I_{RMS} (or V_{RMS}) shall be calculated using the derating factors as shown below:

TEMPERATURE	DERATING FACTOR
+25 °C	1.0
+55 °C	0.8
+85 °C	0.6
+125 °C	0.4

5. **Voltage Derating:** the sum of the peak AC voltage plus the DC voltage shall not exceed the DC rated voltage of the capacitor. For more details refer to technical note “Solid Tantalum Capacitors (With MnO_2 Electrolyte) Voltage Derating”, link is provided in the “Product Information” table.

6. **Reverse Voltage:** the sum of the negative peak AC voltage plus the applied DC voltage shall not allow a reversal voltage exceeding 10 % of the DC rated voltage at +25 °C, and 5 % at +85 °C.

PRODUCT INFORMATION	
Mounting of Through Hole Components	www.vishay.com/doc?40108
Solid Tantalum Capacitors (With MnO_2 Electrolyte) Voltage Derating	www.vishay.com/doc?40246
AC Ripple Current Calculations Solid Tantalum Capacitors	www.vishay.com/doc?40031
SELECTOR GUIDES	
Selector Guide	www.vishay.com/doc?49054
FAQ	
Frequently Asked Questions	www.vishay.com/doc?40110

For technical questions, contact: tantalum@vishay.com
THIS DOCUMENT IS SUBJECT TO CHANGE WITHOUT NOTICE. THE PRODUCTS DESCRIBED HEREIN AND THIS DOCUMENT ARE SUBJECT TO SPECIFIC DISCLAIMERS, SET FORTH AT www.vishay.com/doc?91000

Disclaimer

ALL PRODUCT, PRODUCT SPECIFICATIONS AND DATA ARE SUBJECT TO CHANGE WITHOUT NOTICE TO IMPROVE RELIABILITY, FUNCTION OR DESIGN OR OTHERWISE.

Vishay Intertechnology, Inc., its affiliates, agents, and employees, and all persons acting on its or their behalf (collectively, “Vishay”), disclaim any and all liability for any errors, inaccuracies or incompleteness contained in any datasheet or in any other disclosure relating to any product.

Vishay makes no warranty, representation or guarantee regarding the suitability of the products for any particular purpose or the continuing production of any product. To the maximum extent permitted by applicable law, Vishay disclaims (i) any and all liability arising out of the application or use of any product, (ii) any and all liability, including without limitation special, consequential or incidental damages, and (iii) any and all implied warranties, including warranties of fitness for particular purpose, non-infringement and merchantability.

Statements regarding the suitability of products for certain types of applications are based on Vishay's knowledge of typical requirements that are often placed on Vishay products in generic applications. Such statements are not binding statements about the suitability of products for a particular application. It is the customer's responsibility to validate that a particular product with the properties described in the product specification is suitable for use in a particular application. Parameters provided in datasheets and / or specifications may vary in different applications and performance may vary over time. All operating parameters, including typical parameters, must be validated for each customer application by the customer's technical experts. Product specifications do not expand or otherwise modify Vishay's terms and conditions of purchase, including but not limited to the warranty expressed therein.

Hyperlinks included in this datasheet may direct users to third-party websites. These links are provided as a convenience and for informational purposes only. Inclusion of these hyperlinks does not constitute an endorsement or an approval by Vishay of any of the products, services or opinions of the corporation, organization or individual associated with the third-party website. Vishay disclaims any and all liability and bears no responsibility for the accuracy, legality or content of the third-party website or for that of subsequent links.

Vishay products are not designed for use in life-saving or life-sustaining applications or any application in which the failure of the Vishay product could result in personal injury or death unless specifically qualified in writing by Vishay. Customers using or selling Vishay products not expressly indicated for use in such applications do so at their own risk. Please contact authorized Vishay personnel to obtain written terms and conditions regarding products designed for such applications.

No license, express or implied, by estoppel or otherwise, to any intellectual property rights is granted by this document or by any conduct of Vishay. Product names and markings noted herein may be trademarks of their respective owners.

© 2025 VISHAY INTERTECHNOLOGY, INC. ALL RIGHTS RESERVED

THIS DOCUMENT IS SUBJECT TO CHANGE WITHOUT NOTICE. THE PRODUCTS DESCRIBED HEREIN AND THIS DOCUMENT ARE SUBJECT TO SPECIFIC DISCLAIMERS, SET FORTH AT www.vishay.com/doc?91000

Looking for pricing, stock, or lifecycle information?

Click below to explore more details on WIN SOURCE:

- View 173D106X9035X on WIN SOURCE
- Vishay Information

Optimize Your Supply Chain with WIN SOURCE Solutions

- Global Sourcing Solution
- Obsolete Management
- Cost Control Management
- Shortage Management
- Alternative Solution
- Excess Inventory Management