1.Description

The UMW UCC27517ADBVR device is a low voltage power MOSFET and IGBT in phase gate driver. Proprietary latch-immune of CMOS technology enables single-chip integrated architectures with high robustness. The UMW UCC27517ADBVR logic input level is compatible with CMOS or TTL logic output levels down to 3.3V. The output driver has Internal Undervoltage Lockout (UVLO) circuitry with hysteresis and buffer stage of output current . The UMW UCC27517ADBVR is designed to operate over a wide VCC range of 5 V to 25 V and wide temperature range of –40°C to 125°C.

2.Applications

- Switch-Mode Power Supplies
- General Gate Driver
- Driving MOSFETs and IGBTs

3.Features

- Dual Input Design (Choice of an Inverting (IN- pin) or Non-inverting (IN+ pin) Driver Configuration)
  – Unused Input Pin Can Be Used for Enable or Disable Function
- TTL and CMOS Compatible Input-Logic Threshold
- 5 to 25-V Single-Supply Range
- Operating Temperature Range of -40 to 125°C
- Undervoltage Lockout
  -- Undervoltage Lockout turn-on threshold 4.0V
  -- Undervoltage Lockout turn-off threshold 3.9V
- Turn on/Turn off Delays:
  -- Ton/Toff =30ns/30ns
- 4-A Peak Source and Sink-Drive Current

4.Pin Configuration

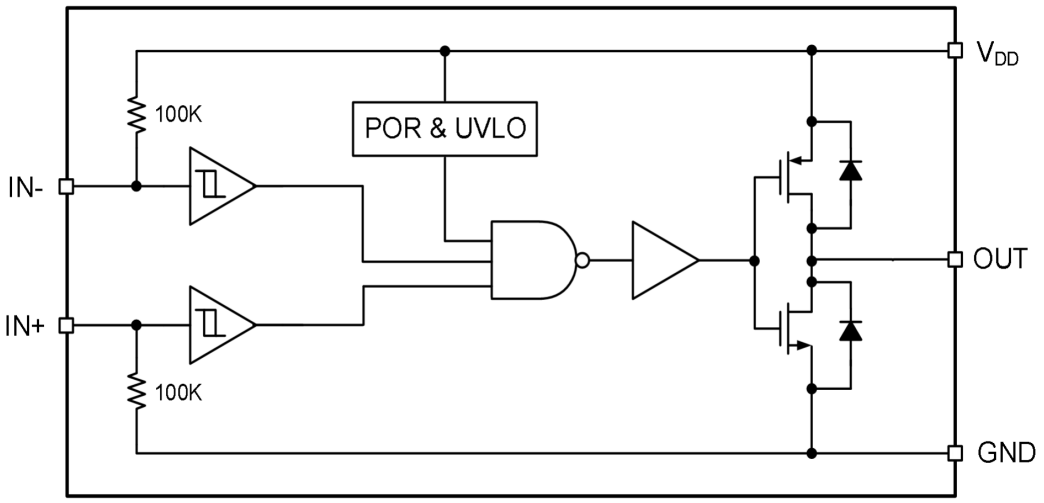

5.Pinning Information

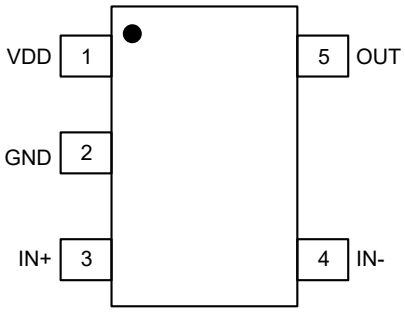

SOT23-5

Pin Functions

Number	Symbol	Description
1	VDD	Bias supply input
2	GND	Ground: All signals are referenced to this pin
3	IN+	Non-inverting Input: When the driver is used in inverting configuration, connect IN+ to VDD in order to enable output, OUT held LOW if IN+ is unbiased or floating
4	IN-	Inverting Input: When the driver is used in non-inverting configuration, connect IN- to GND in order to enable output, OUT held LOW if IN- is unbiased or floating
5	OUT	Sourcing/Sinking Current Output of Driver

6.Absolute Maximum Ratings

Exceeding the limit maximum rating may cause permanent damage to the device. All voltage parameters are rated with reference to V_{SS} and an ambient temperature of 25°C.

Parameter	Symbol	Min	Max	Units
Supply voltage range	V_{CC}	-0.3	25	V
OUT voltage range	V_O	-0.3	V_{CC}+0.3	V
IN+, IN- voltage	V_{IN}	-6	V_{CC}+0.3	V
Thermal resistance	R_{thJA}		151	°C/W
Storage temperature	T_S	-55	150	°C
Operating junction temperature	T_J		150	°C
Lead temperature	T_L		300	°C
Ambient temperature	T_A	-40	125	°C

7.Electrical Characteristics

T_A=25°C, V_{CC}=15V, CL=1nF (unless otherwise noted)

Parameter	Symbol	Min	Typ	Max	Units
Input signal high threshold	V_{IH}	2.7			V
Input signal low threshold	V_{IL}			0.8	V
Under voltage Lockout (UVLO) turn-on threshold V_{CC}	V_{CCUV+}		4		V
Under voltage Lockout (UVLO) turn-off threshold V_{CC}	V_{CCUV-}		3.9		V
UVLO threshold hysteresis V_{CC}	V_{CCUVHY}		0.1		V
Input current(IN+/IN-=HIGH)	I_{IN+}		50	100	μA
Input current(IN+/IN-= LOW)	I_{IN-}			5	μA
High output voltage	V_{OH}	V_{DD}-0.35			V
Low output voltage	V_{OL}			0.35	V
V_{CC} quiescent supply current	I_Q		180	400	μA
Output high short-circuit pulse current	I_{O+}		4		A
Output low short-circuit pulse current	I_{O-}		4		A
Rise time	t_R		10	15	ns
Fall time	t_F		10	15	ns
Turn-on propagation delay	t_{ON}		30	60	ns
Turn-off propagation delay	t_{OFF}		30	60	ns

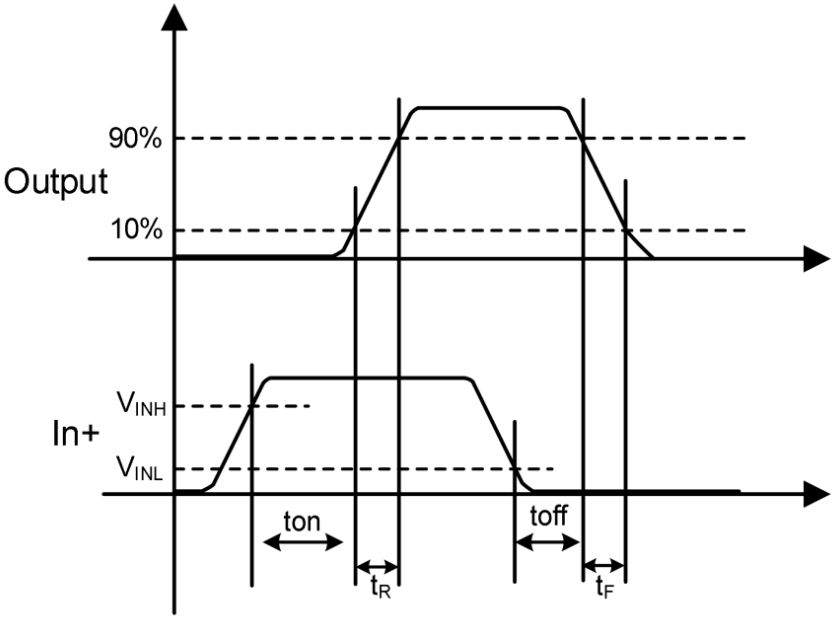

Figure 1. Input-Output waveform (non-inverting)

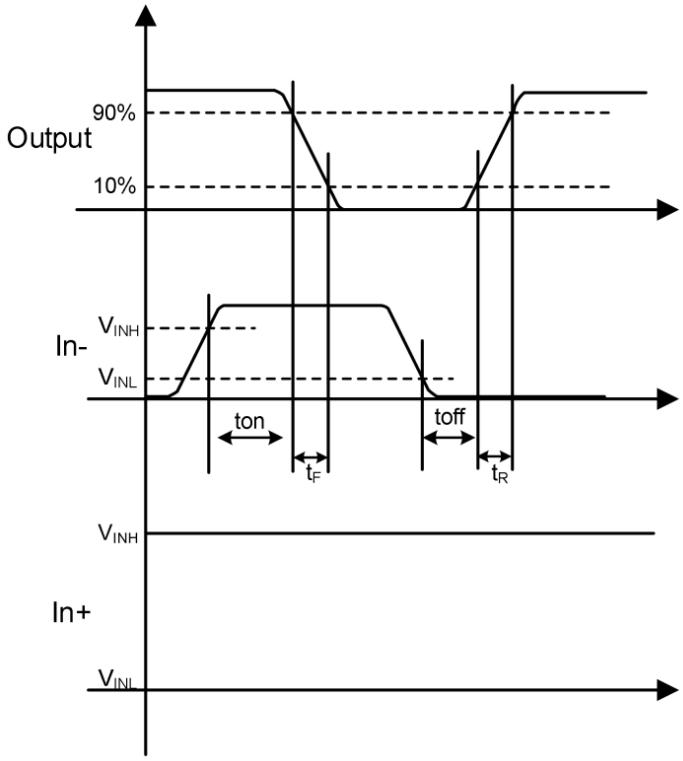

Figure 2. Input-Output waveform (inverting)

8.1 Typical Characteristic

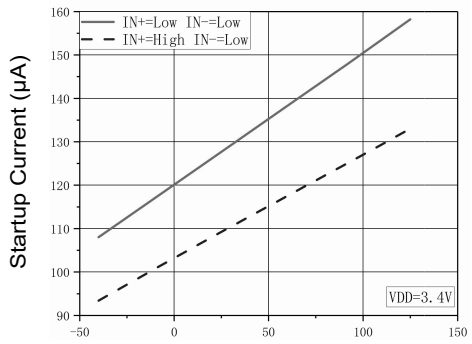

Figure 1: Start-Up Current vs Temperature

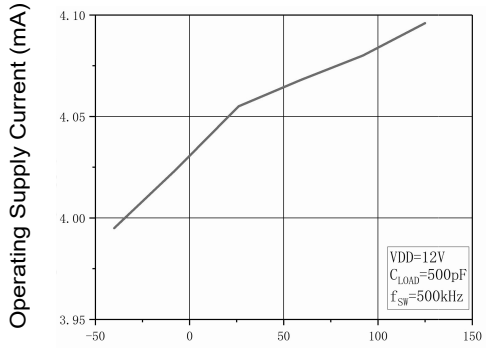

Figure 2: Operating Supply Current vs Temperature (Outputs Switching)

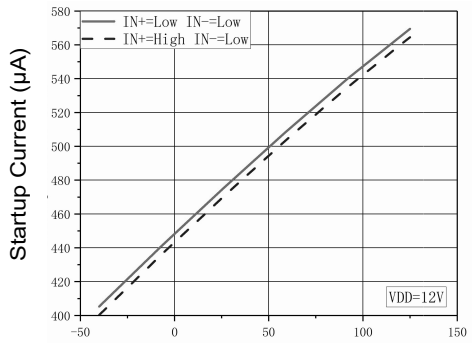

Figure 3: Supply Current vs Temperature (Outputs In DC On/Off Condition)

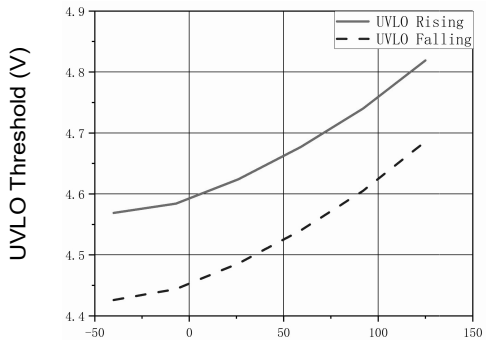

Figure 4: UVLO Threshold vs Temperature

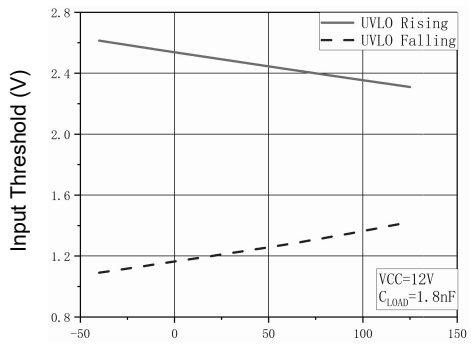

Figure 5: Input Threshold vs Temperature

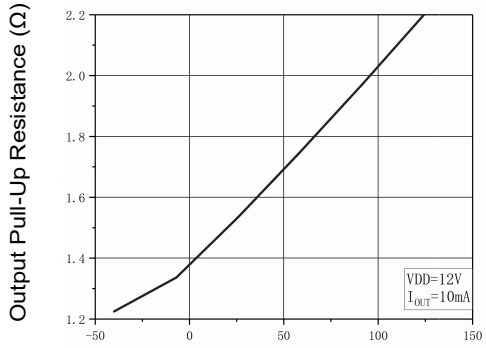

Figure 6: Output Pull-up Resistance vs Temperature

8.2 Typical Characteristic

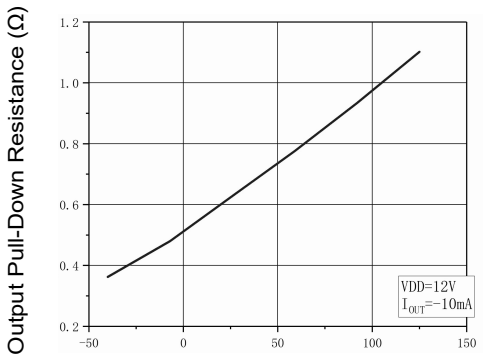

Figure 7: Output Pull-down Resistance vs Temperature

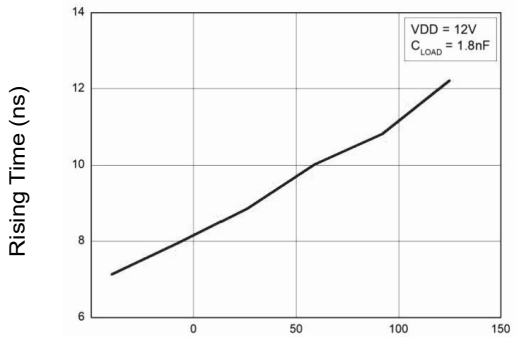

Figure 8: Rise Time vs Temperature

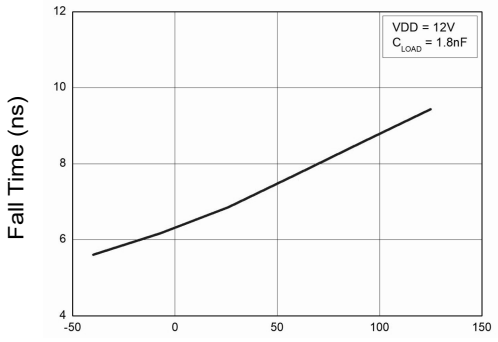

Figure 9: Fall Time vs Temperature

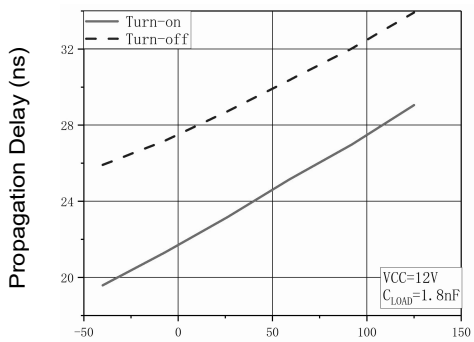

Figure 10: Input to Output Propagation Delay vs Temperature

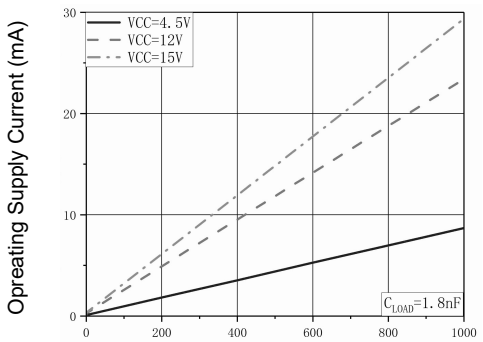

Figure 11: Operating Supply Current vs Frequency

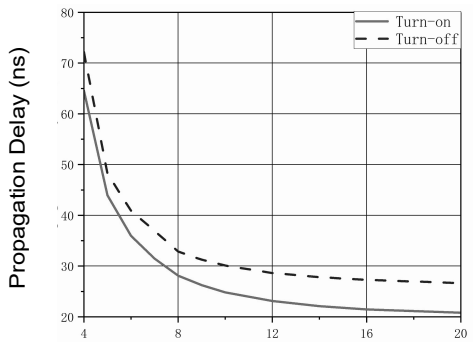

Figure 12: Propagation Delays vs Supply Voltage

8.3 Typical Characteristic

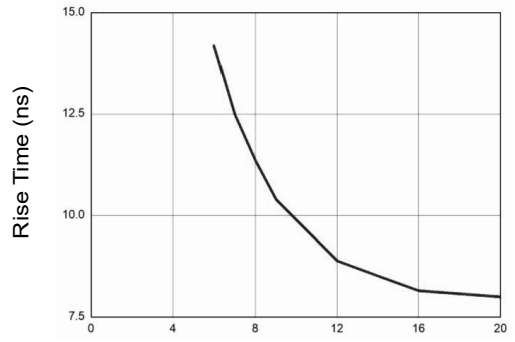

Figure 13: Rise Time vs Supply Voltage

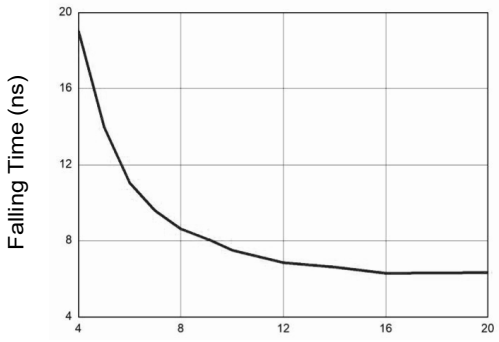

Figure 14: Fall Time vs Supply Voltage

9.Functional Block Diagram

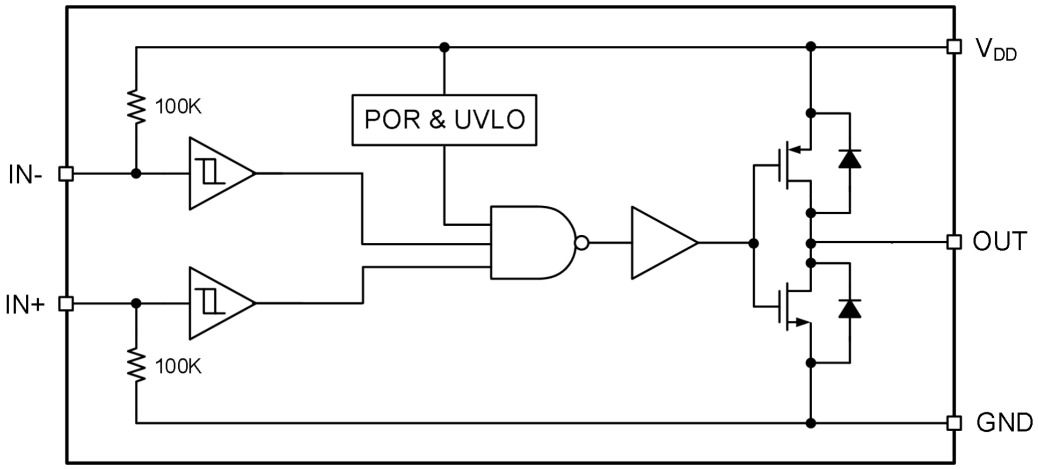

10.Device Functional Modes

Table 1 Device Logic Table

IN+	IN-	OUT
L	L	L
L	H	L
H	L	H
H	H	L
L	L	L
X (1)	Any	L
Any	X (1)	L

Notes: (1) Floating condition.

11.Typical Application

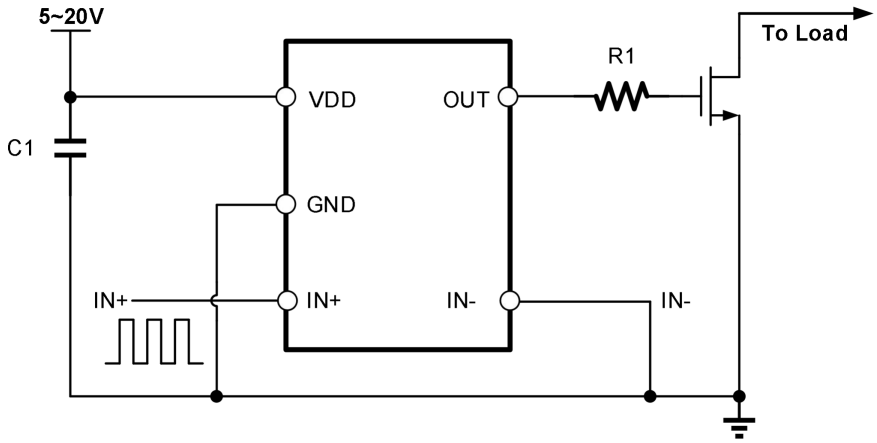

Figure 15. Non-inverting Typical Application Diagram of UMW UCC27517ADBVR

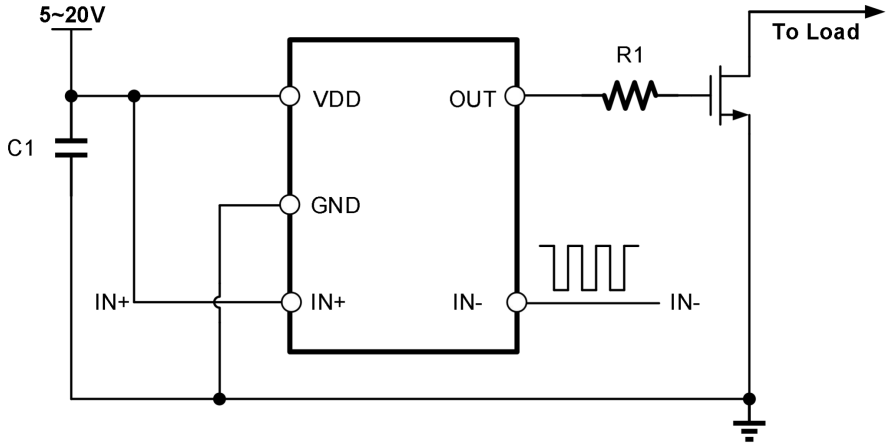

Figure 16. Inverting Typical Application Diagram of UMW UCC27517ADBVR

12.SOT23-5 Package Outline Dimensions

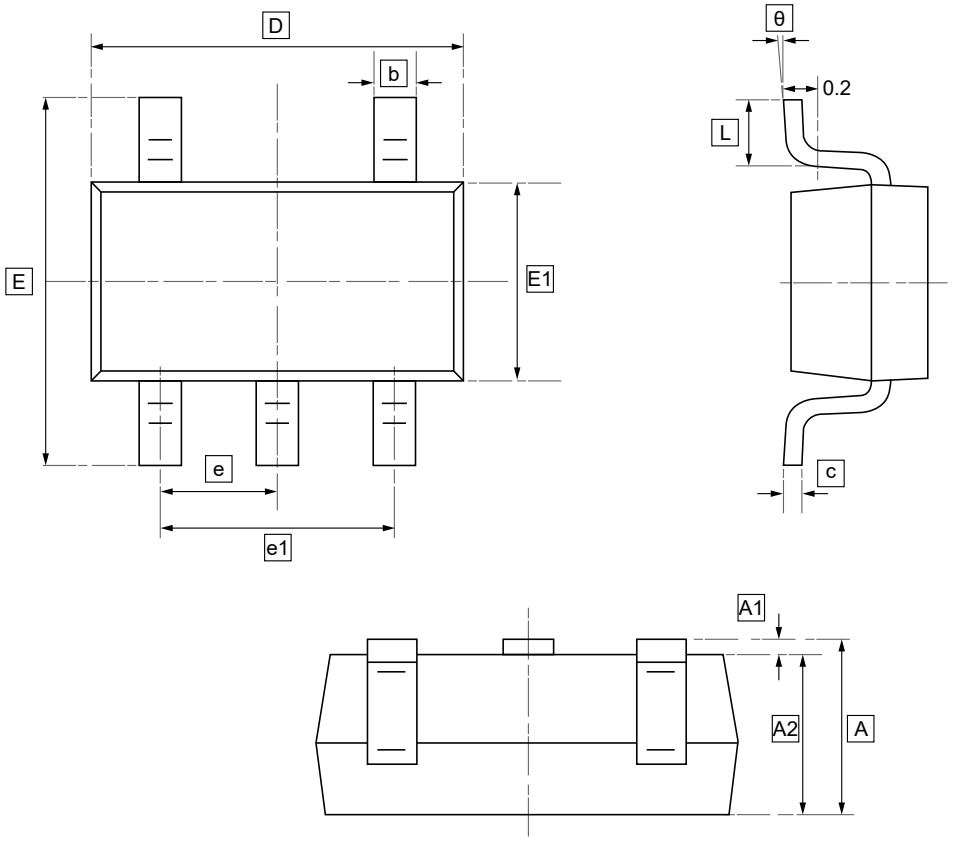

DIMENSIONS (mm are the original dimensions)

Symbol	A	A1	A2	b	c	D	E1	E	e	e1	L	θ
Min	1.050	0.000	1.050	0.300	0.100	2.820	1.500	2.650	0.950	1.800	0.300	0°
Max	1.250	0.100	1.150	0.500	0.200	3.020	1.700	2.950	BSC	2.000	0.600	8°

13.Ordering information

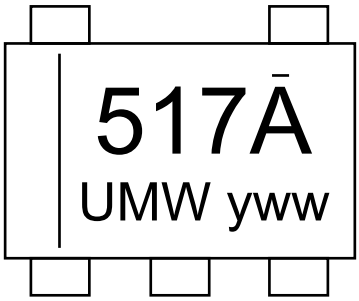

yww: Batch Code

Order Code	Package	Base QTY	Delivery Mode
UMW UCC27517ADBVR	SOT23-5	3000	Tape and reel

14.Disclaimer

UMW reserves the right to make changes to all products, specifications. Customers should obtain the latest version of product documentation and verify the completeness and currency of the information before placing an order.

When applying our products, please do not exceed the maximum rated values, as this may affect the reliability of the entire system. Under certain conditions, any semiconductor product may experience faults or failures. Buyers are responsible for adhering to safety standards and implementing safety measures during system design, prototyping, and manufacturing when using our products to prevent potential failure risks that could lead to personal injury or property damage.

Unless explicitly stated in writing, UMW products are not intended for use in medical, life-saving, or life-sustaining applications, nor for any other applications where product failure could result in personal injury or death. If customers use or sell the product for such applications without explicit authorization, they assume all associated risks.

When reselling, applying, or exporting, please comply with export control laws and regulations of China, the United States, the United Kingdom, the European Union, and other relevant countries, regions, and international organizations.

This document and any actions by UMW do not grant any intellectual property rights, whether express or implied, by estoppel or otherwise. The product names and marks mentioned herein may be trademarks of their respective owners.

Looking for pricing, stock, or lifecycle information?

Click below to explore more details on WIN SOURCE:

- View UCC27517ADBVR on WIN SOURCE
- UMW Information

Optimize Your Supply Chain with WIN SOURCE Solutions

- Global Sourcing Solution
- Obsolete Management
- Cost Control Management
- Shortage Management
- Alternative Solution
- Excess Inventory Management