1.Description

The UMW MCP1415/6 device is a low voltage power MOSFET and IGBT in phase gate driver. Proprietary latch-immune of CMOS technology enables single-chip integrated architectures with high robustness. The UMW MCP1415/6 logic input level is compatible with CMOS or TTL logic output levels down to 3.3V. The output driver has internal Undervoltage Lockout (UVLO) circuitry with hysteresis and buffer stage of output current. The UMW MCP1415/6 is designed to operate over a wide VCC range of 5 V to 25 V and wide temperature range of –40°C to 125°C.

2.Applications

- Switch-Mode Power Supplies
- General Gate Driver
- Driving MOSFETs and IGBTs

3.Features

- Input output in phase / out of phase
- Compatible with 3.3V、5V input logic
- 4.5 to 25-V Single-Supply Range
- High capacitance load driving capability
- Operating Temperature Range of -40 to 125°C
- Undervoltage Lockout
- Turn on/Turn off Delays:

  -- Ton/Toff =25ns/25ns
- 2-A Peak Source and Sink-Drive Current
- SOT23-5 Package

4.Pin Configuration

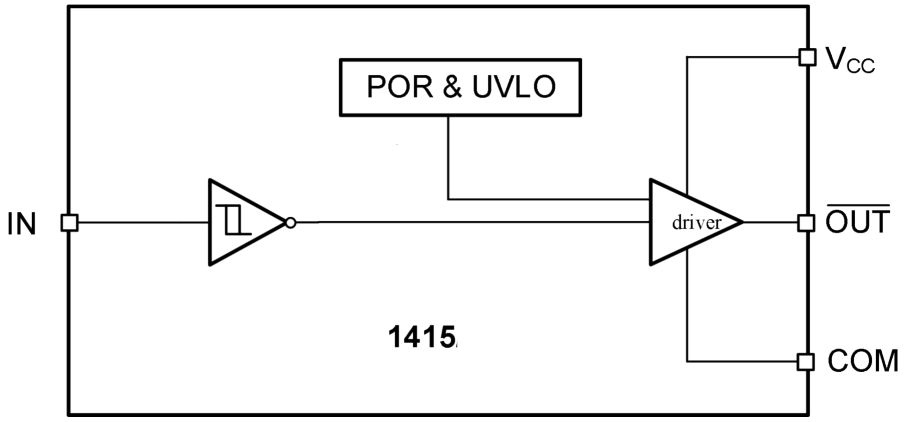

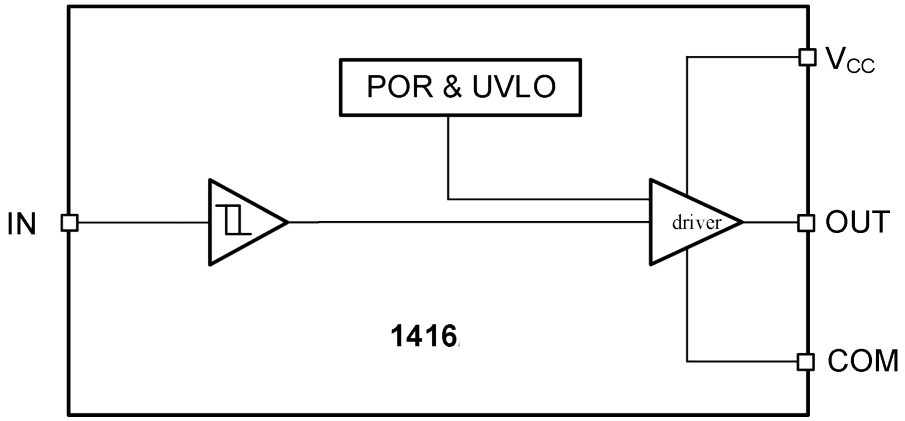

5.1 Pinning Information

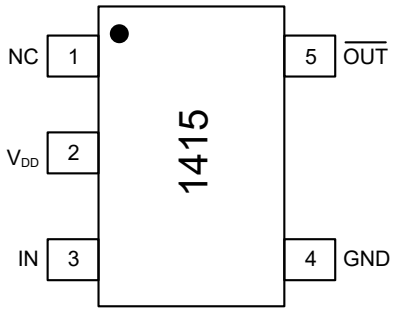

SOT23-5

UMW MCP1415 pin description

Number	Symbol	Description
1	NC	No connection
2	V_{DD}	Power supply
3	IN	Logic input
4	GND	Ground
5	$\overline{OUT}$	Gate driven output(out-of-phase)

5.2 Pinning Information

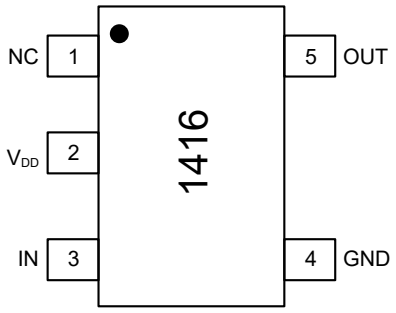

SOT23-5

UMW MCP1416 pin description

Number	Symbol	Description
1	NC	No connection
2	V_{DD}	Power supply
3	IN	Logic input
4	GND	Ground
5	OUT	Gate driven output(in-phase)

6.Absolute Maximum Ratings

Stresses beyond those listed under Absolute Maximum Ratings may cause permanent damage to the device. All voltages are with respect to COM unless otherwise noted, Currents are positive into, negative out of the specified terminal, environment temperature is 25°C.

Parameter	Symbol	Min	Max	Units
Supply voltage range	V_{CC}	-0.3	25	V
OUT voltage range	V_O	-0.3	V_{CC}+0.3	V
IN voltage	V_{IN}	-12	V_{CC}+0.3	V

7.Thermal Information

Parameter	Symbol	Min	Max	Units
Thermal Resistance	Rth_{JA}		151	°C/W
Storage Temperature	T_S	-55	150	°C
Operating Junction Temperature	T_J		150	°C
Lead Temperature	T_L		300	°C

8.Recommended Operating Conditions

To properly operate, device should be used in the following recommended conditions. All voltages are with respect to COM unless otherwise noted, Currents are positive into, negative out of the specified terminal, environment temperature is 25°C.

Parameter	Symbol	Min	Max	Units
Supply voltage range	V_{CC}	4.5	20	V
OUT voltage range	V_O	0	V_{CC}	V
IN voltage	V_{IN}	-10	V_{CC}	V
Ambient temperature	T_A	-40	125	°C

9.Electrical Characteristics

T_A=25°C, V_{CC}=15V (unless otherwise noted)

Parameter		Symbol	Min	Typ	Max	Units
Input signal high threshold		V_{IH}	2.5			V
Input signal low threshold		V_{IL}			0.8	V
Under voltage Lockout (UVLO) turn-on threshold V_{CC}		V_{CCUV+}		4		V
Under voltage Lockout (UVLO) turn-off threshold V_{CC}		V_{CCUV-}		3.9		V
UVLO threshold hysteresis V_{CC}		V_{CCUVHY}		0.1		V
Input current(IN=HIGH)	UMW MCP1416, IN=5V	I_{IN+}		50	100	μA
	UMW MCP1415, IN=0V			150	300	μA
Input current(IN=LOW)	UMW MCP1416, IN=0V	I_{IN-}			5	μA
	UMW MCP1415, IN=5V			100	200	μA
High output voltage		V_{OH}	V_{CC}-0.35			V
Low output voltage		V_{OL}			0.35	V
V_{CC} quiescent supply current		I_Q			500	μA
Output high short-circuit pulse current		I_{O+}		2		A
Output low short-circuit pulse current		I_{O-}		2		A
Rise time (CL=1nF)		t_R			30	ns
Fall time (CL=1nF)		t_F			30	ns
Turn-on propagation delay (CL=1nF)		t_{ON}		25	50	ns
Turn-off propagation delay (CL=1nF)		t_{OFF}		25	50	ns

10.Function Description

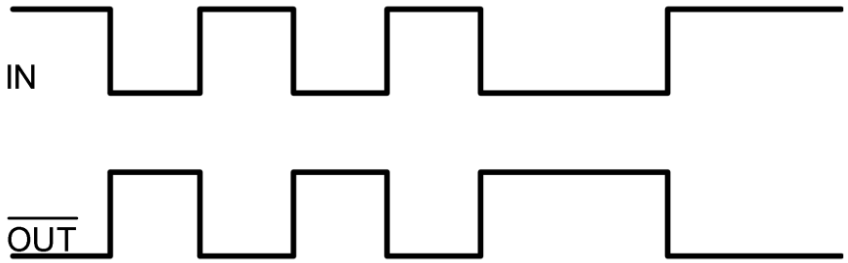

Figure 1. UMW MCP1415 Input-Output waveform

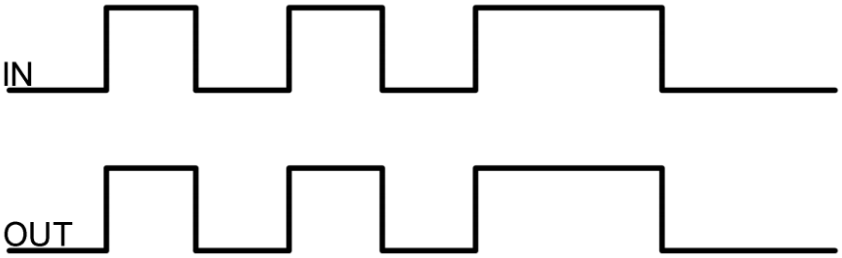

Figure 2. UMW MCP1416 Input-Output waveform

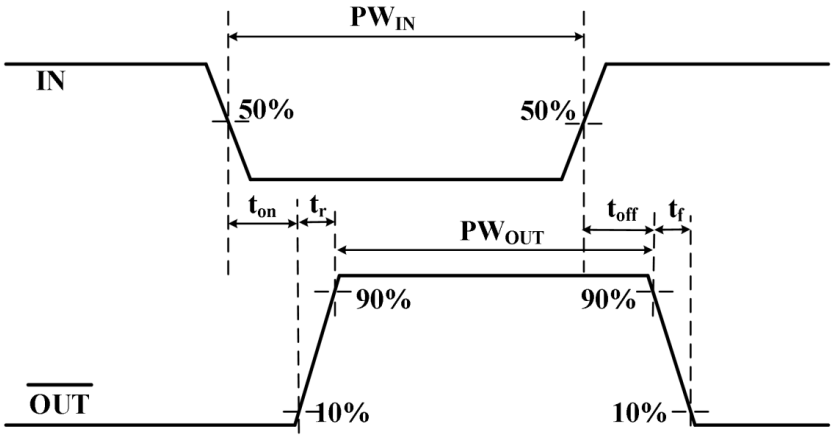

Figure 3. UMW MCP1415 Propagation Time Waveform Definition

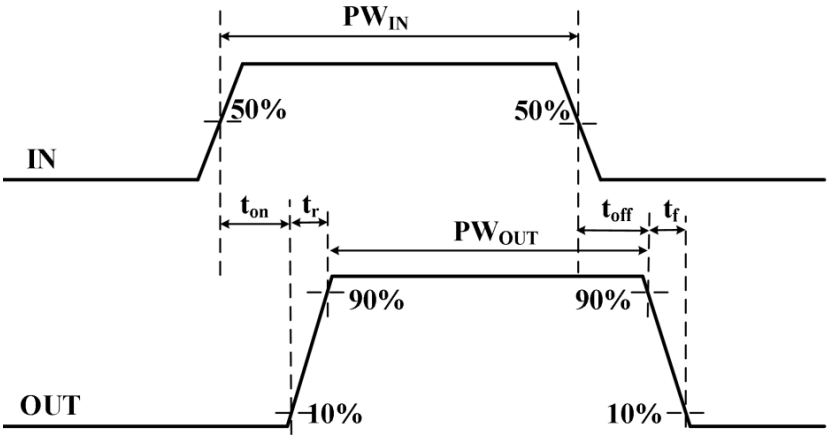

Figure 4. UMW MCP1416 Propagation Time Waveform Definition

11.Function Block Diagram

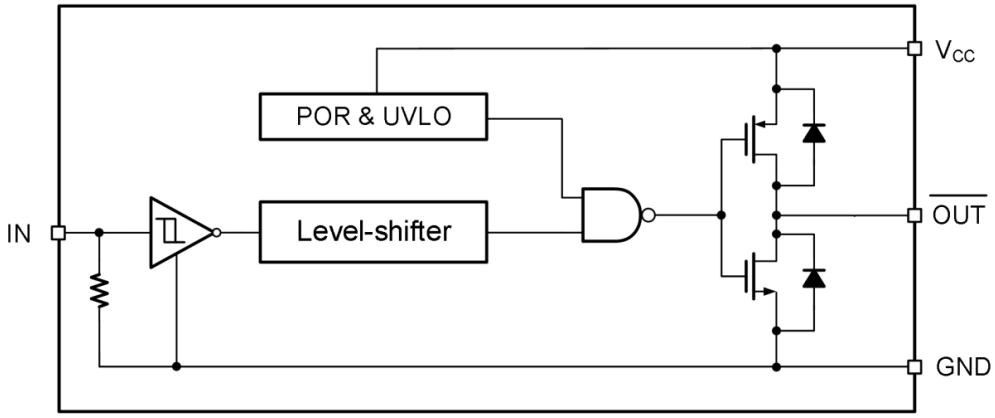

Figure 5. Function Block Diagram of UMW MCP1415

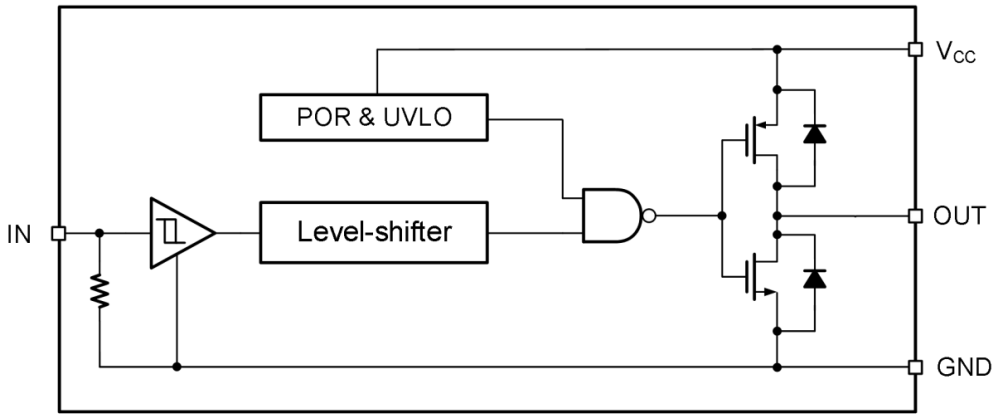

Figure 6. Function Block Diagram of UMW MCP1416

12.Application Message

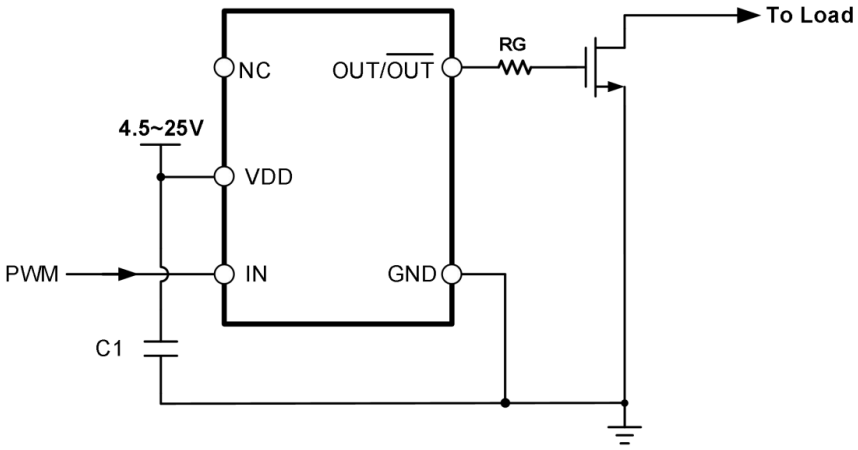

Figure 7. Typical application circuit of UMW MCP1415/6

13.SOT23-5 Package Outline Dimensions

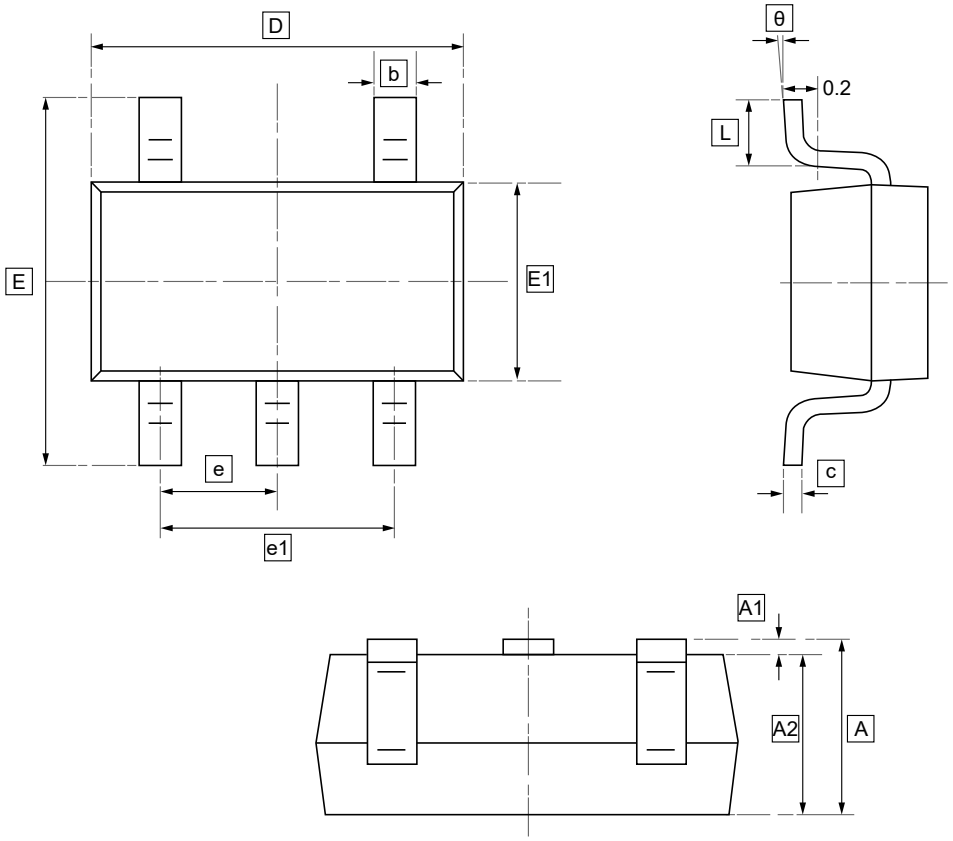

DIMENSIONS (mm are the original dimensions)

Symbol	A	A1	A2	b	c	D	E1	E	e	e1	L	θ
Min	1.050	0.000	1.050	0.300	0.100	2.820	1.500	2.650	0.950	1.800	0.300	0°
Max	1.250	0.100	1.150	0.500	0.200	3.020	1.700	2.950	BSC	2.000	0.600	8°

14.Ordering information

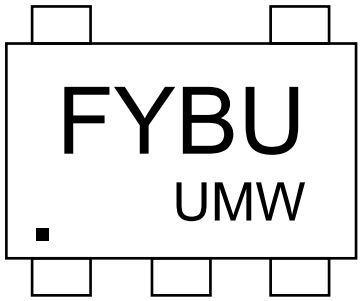

Order Code	Marking	Package	Base QTY	Delivery Mode
UMW MCP1415T-E/OT	FYBU	SOT23-5	3000	Tape and reel
UMW MCP1416T-E/OT	FZQM	SOT23-5	3000	Tape and reel

15.Disclaimer

UMW reserves the right to make changes to all products, specifications. Customers should obtain the latest version of product documentation and verify the completeness and currency of the information before placing an order.

When applying our products, please do not exceed the maximum rated values, as this may affect the reliability of the entire system. Under certain conditions, any semiconductor product may experience faults or failures. Buyers are responsible for adhering to safety standards and implementing safety measures during system design, prototyping, and manufacturing when using our products to prevent potential failure risks that could lead to personal injury or property damage.

Unless explicitly stated in writing, UMW products are not intended for use in medical, life-saving, or life-sustaining applications, nor for any other applications where product failure could result in personal injury or death. If customers use or sell the product for such applications without explicit authorization, they assume all associated risks.

When reselling, applying, or exporting, please comply with export control laws and regulations of China, the United States, the United Kingdom, the European Union, and other relevant countries, regions, and international organizations.

This document and any actions by UMW do not grant any intellectual property rights, whether express or implied, by estoppel or otherwise. The product names and marks mentioned herein may be trademarks of their respective owners.

Looking for pricing, stock, or lifecycle information?

Click below to explore more details on WIN SOURCE:

- View MCP1416T-E/OT on WIN SOURCE
- UMW Information

Optimize Your Supply Chain with WIN SOURCE Solutions

- Global Sourcing Solution
- Obsolete Management
- Cost Control Management
- Shortage Management
- Alternative Solution
- Excess Inventory Management