THE DATASHEET OF

UC2823ADWTR

www.win-source.net 0086-755-83957316

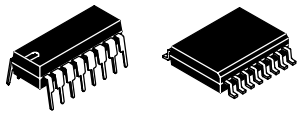

HIGH-SPEED PWM CONTROLLER

FEATURES

- **Improved Versions of the UC3823/UC3825 PWMs**
- **Compatible with Voltage-Mode or Current-Mode Control Methods**
- **Practical Operation at Switching Frequencies to 1 MHz**
- **50-ns Propagation Delay to Output**
- **High-Current Dual Totem Pole Outputs (2-A Peak)**
- **Trimmed Oscillator Discharge Current**
- **Low 100-μA Startup Current**
- **Pulse-by-Pulse Current Limiting Comparator**
- **Latched Overcurrent Comparator With Full Cycle Restart**

DESCRIPTION

The UC3823A and UC3823B and the UC3825A and UC3825B family of PWM controllers are improved versions of the standard UC3823 and UC3825 family. Performance enhancements have been made to several of the circuit blocks. Error amplifier gain bandwidth product is 12 MHz, while input offset voltage is 2 mV. Current limit threshold is assured to a tolerance of 5%. Oscillator discharge current is specified at 10 mA for accurate dead time control. Frequency accuracy is improved to 6%. Startup supply current, typically 100 μA, is ideal for off-line applications. The output drivers are redesigned to actively sink current during UVLO at no expense to the startup current specification. In addition each output is capable of 2-A peak currents during transitions.

BLOCK DIAGRAM

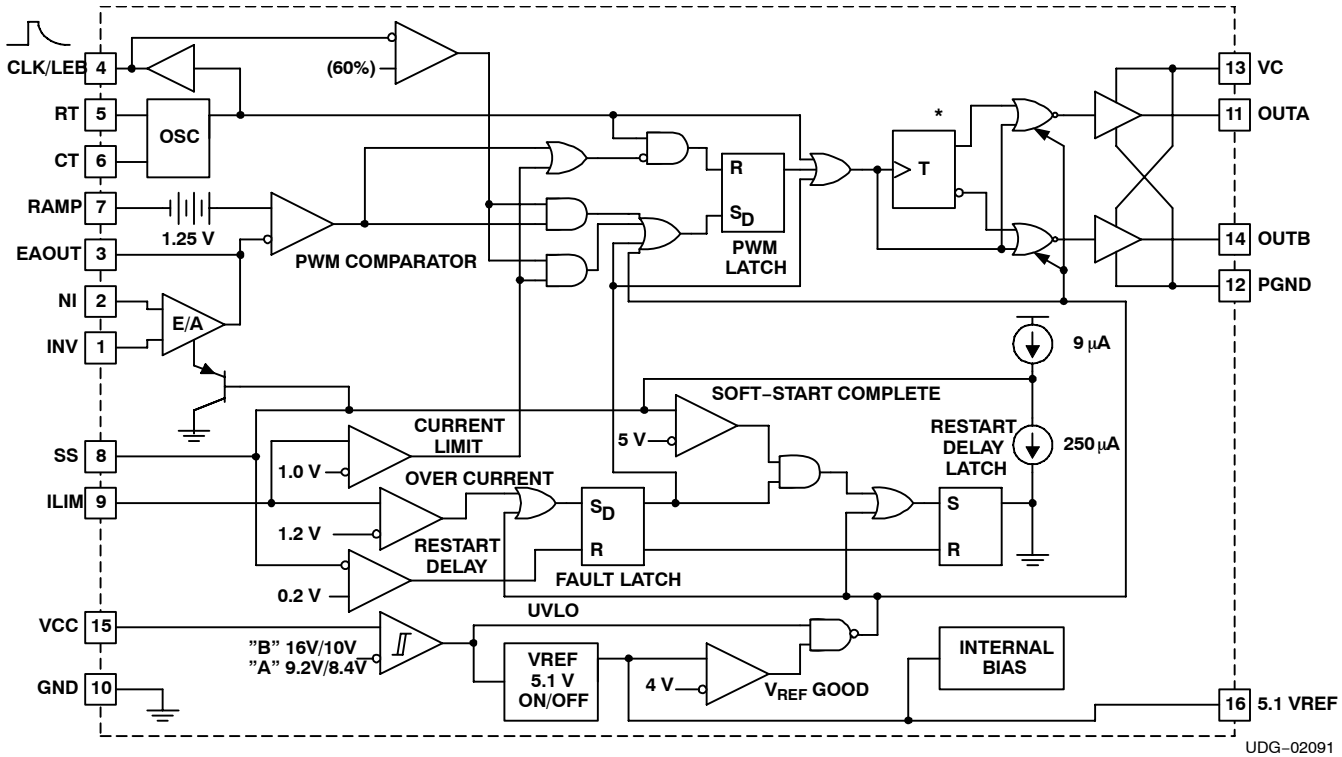

* On the UC1823A version, toggles Q and $\overline{Q}$ are always low.



Please be aware that an important notice concerning availability, standard warranty, and use in critical applications of Texas Instruments semiconductor products and disclaimers thereto appears at the end of this data sheet.

PRODUCTION DATA information is current as of publication date. Products conform to specifications per the terms of Texas Instruments standard warranty. Production processing does not necessarily include testing of all parameters.

Copyright © 2004 –2008, Texas Instruments Incorporated

These devices have limited built-in ESD protection. The leads should be shorted together or the device placed in conductive foam during storage or handling to prevent electrostatic damage to the MOS gates.

DESCRIPTION (CONTINUED)

Functional improvements have also been implemented in this family. The UC3825 shutdown comparator is now a high-speed overcurrent comparator with a threshold of 1.2 V. The overcurrent comparator sets a latch that ensures full discharge of the soft-start capacitor before allowing a restart. While the fault latch is set, the outputs are in the low state. In the event of continuous faults, the soft-start capacitor is fully charged before discharge to insure that the fault frequency does not exceed the designed soft start period. The UC3825 CLOCK pin has become CLK/LEB. This pin combines the functions of clock output and leading edge blanking adjustment and has been buffered for easier interfacing.

The UC3825A and UC3825B have dual alternating outputs and the same pin configuration of the UC3825. The UC3823A and UC3823B outputs operate in phase with duty cycles from zero to less than 100%. The pin configuration of the UC3823A and UC3823B is the same as the UC3823 except pin 11 is now an output pin instead of the reference pin to the current limit comparator. “A” version parts have UVLO thresholds identical to the original UC3823 and UC3825. The “B” versions have UVLO thresholds of 16 V and 10 V, intended for ease of use in off-line applications.

Consult the application note, *The UC3823A,B and UC3825A,B Enhanced Generation of PWM Controllers*, (SLUA125) for detailed technical and applications information.

ORDERING INFORMATION

T_A	MAXIMUM DUTY CYCLE	UVLO					
		9.2 V / 8.4 V			16 V / 10 V		
		SOIC–16[1] (DW)	PDIP–16 (N)	PLCC–20[1] (Q)	SOIC–16 (DW)	PDIP–16 (N)	PLCC–20[1] (Q)
–40°C to 85°C	< 100%	UC2823ADW	UC2823AN	UC2823AQ	UC2823BDW	UC2823BN	–
	< 50%	UC2825ADW	UC2825AN	UC2825AQ	UC2825BDW	UC2825BN	–
–0°C to 70°C	< 100%	UC3823ADW	UC3823AN	UC3823AQ	UC3823BDW	UC3823BN	–
	< 50%	UC3825ADW	UC3825AN	UC3825AQ	UC3825BDW	UC3825BN	UC3825BQ

(1) The DW and Q packages are also available taped and reeled. Add TR suffix to the device type (i.e., UC2823ADWR). To order quantities of 1000 devices per reel for the Q package and 2000 devices per reel for the DW package.

T_A	MAXIMUM DUTY CYCLE	UVLO	
		9.2 V / 8.4 V	
		CDIP–16 (J)	LCCC–20 (L)
–55°C to 125°C	< 100%	UC1823AJ, UC1823AJ883B, UC1823AJQMLV	UC1823AL, UC1823AL883B
	< 50%	UC1825AJ, UC1825AJ883B, UC1825AJQMLV	UC1825AL, UC1825AL883B, UC1825ALQMLV

PIN ASSIGNMENTS

DW, J, OR N PACKAGES
(TOP VIEW)

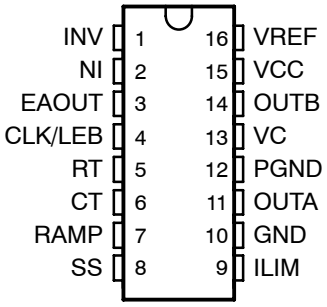

Q OR L PACKAGES
(TOP VIEW)

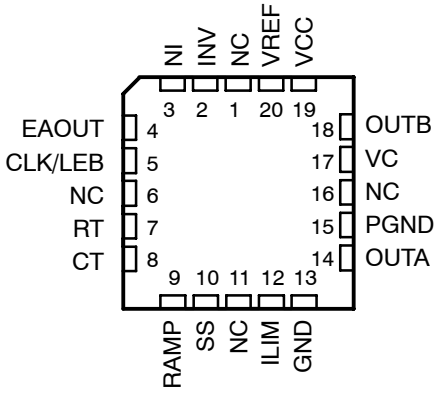

NC = no connection

TERMINAL FUNCTIONS

TERMINAL			I/O	DESCRIPTION
NAME	NO.			
	J or DW	Q or L		
CLK/LEB	4	5	O	Output of the internal oscillator
CT	6	8	I	Timing capacitor connection pin for oscillator frequency programming. The timing capacitor should be connected to the device ground using minimal trace length.
EAOUT	3	4	O	Output of the error amplifier for compensation
GND	10	13	–	Analog ground return pin
ILIM	9	12	I	Input to the current limit comparator
INV	1	2	I	Inverting input to the error amplifier
NI	2	3	I	Non-inverting input to the error amplifier
OUTA	11	14	O	High current totem pole output A of the on-chip drive stage.
OUTB	14	18	O	High current totem pole output B of the on-chip drive stage.
PGND	12	15	–	Ground return pin for the output driver stage
RAMP	7	9	I	Non-inverting input to the PWM comparator with 1.25-V internal input offset. In voltage mode operation, this serves as the input voltage feed-forward function by using the CT ramp. In peak current mode operation, this serves as the slope compensation input.
RT	5	7	I	Timing resistor connection pin for oscillator frequency programming
SS	8	10	I	Soft-start input pin which also doubles as the maximum duty cycle clamp.
VC	13	17	–	Power supply pin for the output stage. This pin should be bypassed with a 0.1-μF monolithic ceramic low ESL capacitor with minimal trace lengths.
VCC	15	19	–	Power supply pin for the device. This pin should be bypassed with a 0.1-μF monolithic ceramic low ESL capacitor with minimal trace lengths
VREF	16	20	O	5.1-V reference. For stability, the reference should be bypassed with a 0.1-μF monolithic ceramic low ESL capacitor and minimal trace length to the ground plane.

ABSOLUTE MAXIMUM RATINGS

over operating free-air temperature range unless otherwise noted(1)

			UNIT
V_{IN}	Supply voltage,	VC, VCC	22 V
I_O	Source or sink current, DC	OUTA, OUTB	0.5 A
I_O	Source or sink current, pulse (0.5 μs)	OUTA, OUTB	2.2 A
	Analog inputs	INV, NI, RAMP	–0.3 V to 7 V
		ILIM, SS	–0.3 V to 6 V
	Power ground	PGND	±0.2 V
	Outputs	OUTA, OUTB limits	PGND –0.3 V to V_C +0.3 V
I_{CLK}	Clock output current	CLK/LEB	–5 mA
$I_{O(EA)}$	Error amplifier output current	EAOUT	5 mA
I_{SS}	Soft-start sink current	SS	20 mA
I_{OSC}	Oscillator charging current	RT	–5 mA
T_J	Operating virtual junction temperature range		–55°C to 150°C
T_{stg}	Storage temperature		–65°C to 150°C
	Lead temperature 1,6 mm (1/16 inch) from case for 10 seconds		–55C°C to 150°C
t_{STG}	Storage temperature		–65°C to 150°C
	Lead temperature 1,6 mm (1/16 inch) from cases for 10 seconds		300°C

(1) Stresses beyond those listed under “absolute maximum ratings” may cause permanent damage to the device. These are stress ratings only, and functional operation of the device at these or any other conditions beyond those indicated under “recommended operating conditions” is not implied. Exposure to absolute-maximum-rated conditions for extended periods may affect device reliability.

ELECTRICAL CHARACTERISTICS

T_A = –55°C to 125°C for the UC1823A/UC1825A, T_A = –40°C to 85°C for the UC2823x/UC2825x, T_A = 0°C to 70°C for the UC3823x/UC3825x, R_T = 3.65 kΩ, C_T = 1 nF, V_{CC} = 12 V, T_A = T_J (unless otherwise noted)

PARAMETER		TEST CONDITIONS	MIN	TYP	MAX	UNIT
REFERENCE, V_{REF}						
V_O	Ouput voltage range	T_J = 25°C, I_O = 1 mA	5.05	5.1	5.15	V
	Line regulation	12 V ≤ VCC ≤ 20 V		2	15	mV
	Load regulation	1 mA ≤ I_O ≤ 10 mA		5	20	mV
	Total output variation	Line, load, temperature	5.03		5.17	V
	Temperature stability(1)	$T_{(min)}$ < T_A < $T_{(max)}$		0.2	0.4	mV/°C
	Output noise voltage(1)	10 Hz < f < 10 kHz		50		μV_{RMS}
	Long term stability(1)	T_J = 125°C, 1000 hours		5	25	mV
	Short circuit current	VREF = 0 V	30	60	90	mA
OSCILLATOR						
f_{OSC}	Initial accuracy(1)	T_J = 25°C	375	400	425	kHz
		R_T = 6.6 kΩ, C_T = 220 pF, T_A = 25°C	0.9	1	1.1	MHz
	Total variation(1)	Line, temperature	350		450	kHz
		R_T = 6.6 kΩ, C_T = 220 pF,	0.85		1.15	MHz
	Voltage stability	12 V < VCC < 20 V			1%	
	Temperature stability(1)	$T_{(min)}$ < T_A < $T_{(max)}$	+/–	5%		
	High-level output voltage, clock		3.7	4		V
	Low-level output voltage, clock			0	0.2	
	Ramp peak		2.6	2.8	3	
	Ramp valley		0.7	1	1.25	
	Ramp valley-to-peak		1.6	1.8	2	
I_{OSC}	Oscillator discharge current	R_T = OPEN, V_{CT} = 2 V	9	10	11	mA
ERROR AMPLIFIER						
	Input offset voltage			2	10	mV
	Input bias current			0.6	3	µA
	Input offset current			0.1	1	µA
	Open loop gain	1 V < V_O < 4 V	60	95		dB
CMRR	Common mode rejection ratio	1.5 V < V_{CM} < 5.5 V	75	95		dB
PSRR	Power supply rejection ratio	12 V < V_{CC} < 20 V	85	110		dB
$I_{O(sink)}$	Output sink current	V_{EAOUT} = 1 V	1	2.5		mA
$I_{O(src)}$	Output source current	V_{EAOUT} = 4 V		–1.3	–0.5	mA
	High-level output voltage	I_{EAOUT} = –0.5 mA	4.5	4.7	5	V
	Low-level output voltage	I_{EAOUT} = –1 mA	0	0.5	1	V
	Gain bandwidth product	f = 200 kHz	6	12		Mhz
	Slew rate(1)		6	9		V/µs

(1) Ensured by design. Not production tested.

ELECTRICAL CHARACTERISTICS

T_A = –55°C to 125°C for the UC1823A/UC1825A, T_A = –40°C to 85°C for the UC2823x/UC2825x, T_A = 0°C to 70°C for the UC3823x/UC3825x, R_T = 3.65 kΩ, C_T = 1 nF, V_{CC} = 12 V, T_A = T_J (unless otherwise noted)

PWM COMPARATOR						
I_{BIAS}	Bias current, RAMP	V_{RAMP} = 0 V		–1	–8	µA
	Minimum duty cycle				0%	
	Maximum duty cycle		85%			
t_{LEB}	Leading edge blanking time	R_{LEB} = 2 kΩ, C_{LEB} = 470 pF	300	375	450	ns
R_{LEB}	Leading edge blanking resistance	$V_{CLK/LEB}$ = 3 V	8.5	10.0	11.5	kΩ
V_{ZDC}	Zero dc threshold voltage, EAOUT	V_{RAMP} = 0 V	1.10	1.25	1.4	V
t_{DELAY}	Delay-to-output time(1)	V_{EAOUT} = 2.1 V, V_{ILIM} = 0 V to 2 V step		50	80	ns
CURRENT LIMIT / START SEQUENCE / FAULT						
I_{SS}	Soft-start charge current	V_{SS}= 2.5 V	8	14	20	µA
V_{SS}	Full soft-start threshold voltage		4.3	5		V
I_{DSCH}	Restart discharge current	V_{SS}= 2.5 V	100	250	350	µA
I_{SS}	Restart threshold voltage			0.3	0.5	V
I_{BIAS}	ILIM bias current	V_{ILIM} = 0 V to 2 V step			15	µA
I_{CL}	Current limit threshold voltage		0.95	1	1.05	V
	Overcurrent threshold voltage		1.14	1.2	1.26	
t_d	Delay-to-output time, ILIM(1)	V_{ILIM} = 0 V to 2 V step		50	80	ns
OUTPUT						
	Low-level output saturation voltage	I_{OUT} = 20 mA		0.25	0.4	V
		I_{OUT} = 200 mA		1.2	2.2	
	High-level output saturation voltage	I_{OUT} = 20 mA		1.9	2.9	
		I_{OUT} = 200 mA		2	3	
t_r, t_f	Rise/fall time(1)	C_L = 1 nF		20	45	ns
UNDERVOLTAGE LOCKOUT (UVLO)						
	Start threshold voltage	UC2823B, UC2825B, UC3825B, UC3825B		16	17	V
		UC1823A, UC1825A, UC2823A, UC2825A UC3825A, UC3825A	8.4	9.2	9.6	
	Stop threshold voltage	UC2823B, UC2825B, UC3825B, UC3825B	9	10		
	OVLO hysteresis	UC1823A, UC1825A, UC2823A, UC2825A UC3825A, UC3825A	0.4	0.8	1.2	
		UC2823B, UC2825B, UC3825B, UC3825B	5	6	7	
SUPPLY CURRENT						
I_{su}	Startup current	VC = VCC = V_{TH}(start) – 0.5 V		100	300	µA
I_{CC}	Input current			28	36	mA

(1) Ensured by design. Not production tested.

APPLICATION INFORMATION

The oscillator of the UC3823A, UC3823B, UC3825A, and UC3825B is a saw tooth. The rising edge is governed by a current controlled by the RT pin and value of capacitance at the CT pin (C_{CT}). The falling edge of the sawtooth sets dead time for the outputs. Selection of RT should be done first, based on desired maximum duty cycle. CT can then be chosen based on the desired frequency (RT) and D_{MAX}. The design equations are:

$$R_T = \frac{3\ V}{(10\ mA) \times \left(1 - D_{MAX}\right)} \qquad C_T = \frac{\left(1.6 \times D_{MAX}\right)}{\left(R_T \times f\right)} \tag{1}$$

Recommended values for R_T range from 1 kΩ to 100 kΩ. Control of D_{MAX} less than 70% is not recommended.

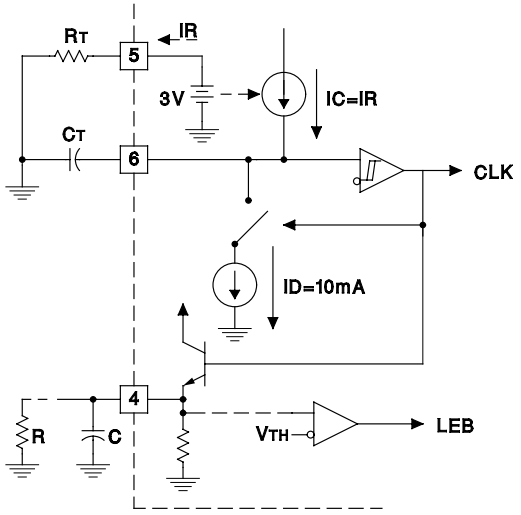

UDG–95102

Figure 1. Oscillator

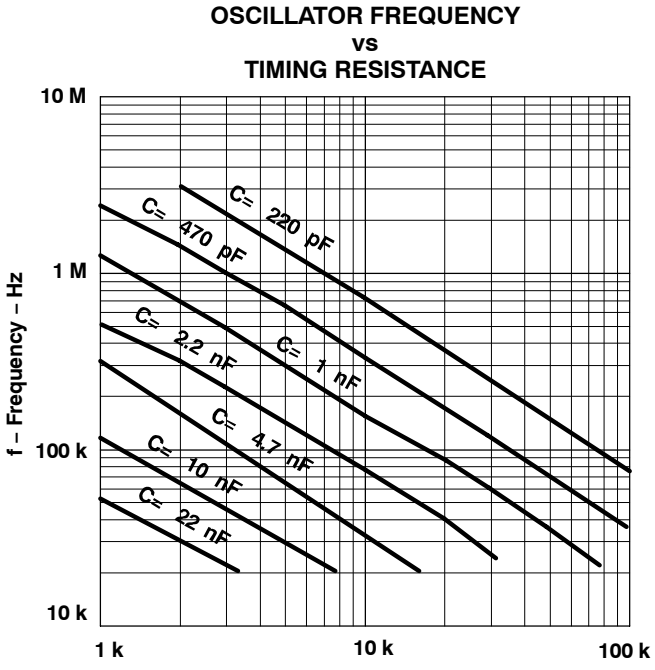

Figure 2

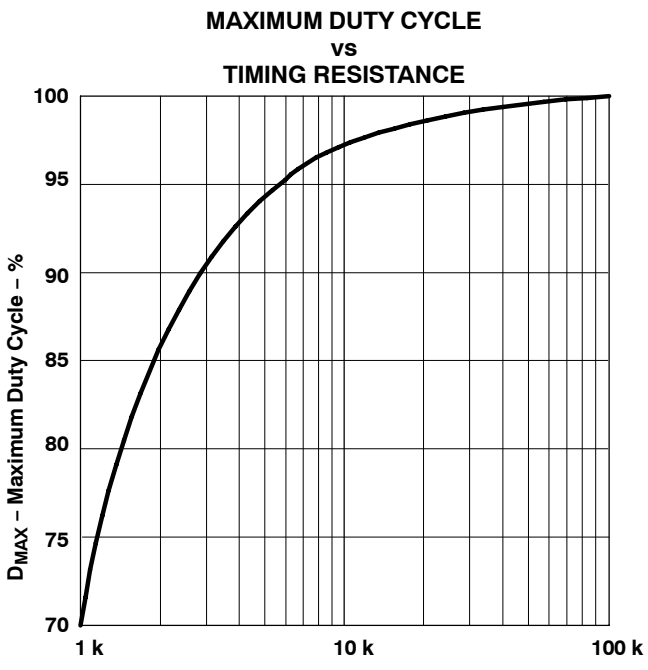

Figure 3

LEADING EDGE BLANKING

The UC3823A, UC2823B, UC3825A, and UC3825B perform fixed frequency pulse width modulation control. The UC3823A, and UC3823B outputs operate together at the switching frequency and can vary from zero to some value less than 100%. The UC3825A and UC3825B outputs are alternately controlled. During every other cycle, one output is off. Each output then switches at one-half the oscillator frequency, varying in duty cycle from 0 to less than 50%.

To limit maximum duty cycle, the internal clock pulse blanks both outputs low during the discharge time of the oscillator. On the falling edge of the clock, the appropriate output(s) is driven high. The end of the pulse is controlled by the PWM comparator, current limit comparator, or the overcurrent comparator.

Normally the PWM comparator senses a ramp crossing a control voltage (error amplifier output) and terminates the pulse. Leading edge blanking (LEB) causes the PWM comparator to be ignored for a fixed amount of time after the start of the pulse. This allows noise inherent with switched mode power conversion to be rejected. The PWM ramp input may not require any filtering as result of leading edge blanking.

To program a leading edge blanking (LEB) period, connect a capacitor, C, to CLK/LEB. The discharge time set by C and the internal 10-kΩ resistor determines the blanked interval. The 10-kΩ resistor has a 10% tolerance. For more accuracy, an external 2-kΩ 1% resistor (R) can be added, resulting in an equivalent resistance of 1.66 kΩ with a tolerance of 2.4%. The design equation is:

$$t_{LEB} = 0.5 \times (R \parallel 10\ k\Omega) \times C \quad (2)$$

Values of R less than 2 kΩ should not be used.

Leading edge blanking is also applied to the current limit comparator. After LEB, if the ILIM pin exceeds the 1-V threshold, the pulse is terminated. The overcurrent comparator, however, is not blanked. It catches catastrophic overcurrent faults without a blanking delay. Any time the ILIM pin exceeds 1.2 V, the fault latch is set and the outputs driven low. For this reason, some noise filtering may be required on the ILIM pin.

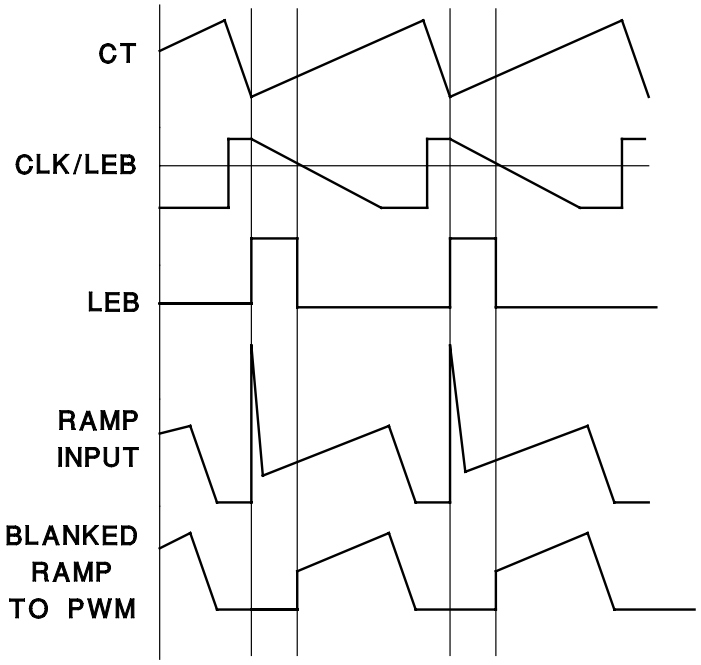

UDG–95105

Figure 4. Leading Edge Blanking Operational Waveforms

UVLO, SOFT-START AND FAULT MANAGEMENT

Soft-start is programmed by a capacitor on the SS pin. At power up, SS is discharged. When SS is low, the error amplifier output is also forced low. While the internal 9-μA source charges the SS pin, the error amplifier output follows until closed loop regulation takes over.

Anytime ILIM exceeds 1.2 V, the fault latch is set and the output pins are driven low. The soft-start cap is then discharged by a 250-μA current sink. No more output pulses are allowed until soft-start is fully discharged and ILIM is below 1.2 V. At this point the fault latch resets and the chip executes a soft-start.

Should the fault latch get set during soft-start, the outputs are immediately terminated, but the soft-start capacitor does not discharge until it has been fully charged first. This results in a controlled hiccup interval for continuous fault conditions.

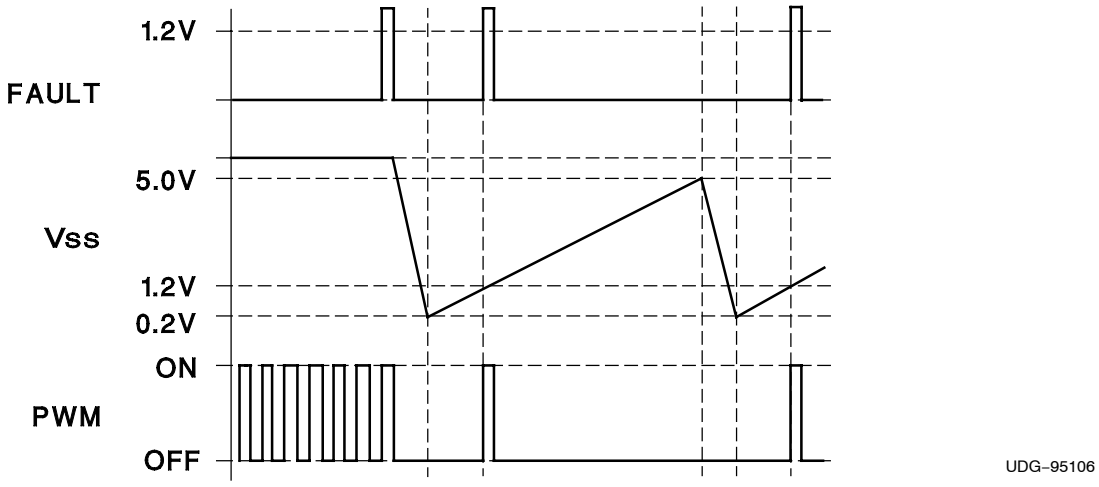

Figure 5. Soft-Start and Fault Waveforms

ACTIVE LOW OUTPUTS DURING UVLO

The UVLO function forces the outputs to be low and considers both VCC and VREF before allowing the chip to operate.

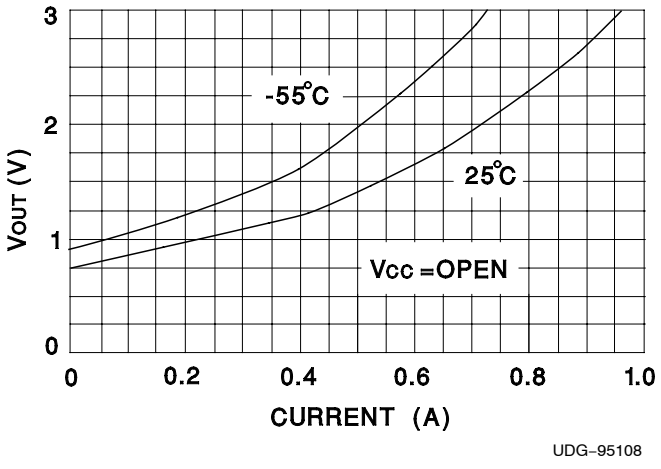

Figure 6. Output Voltage vs Output Current

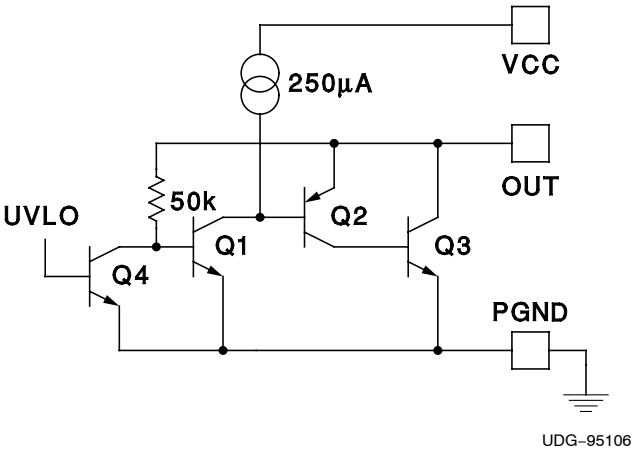

Figure 7. Output V and I During UVLO

CONTROL METHODS

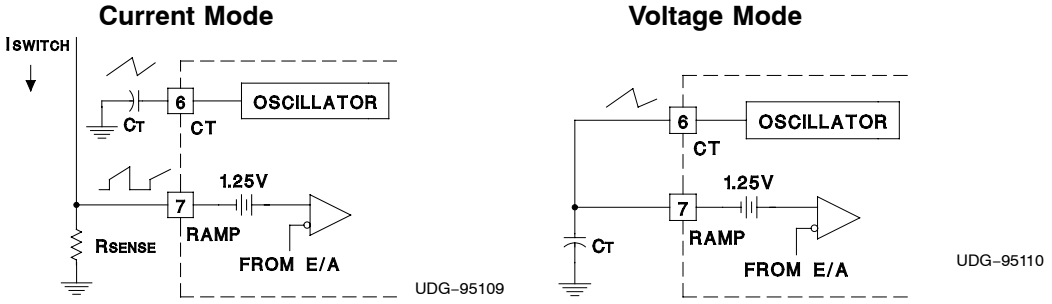

Figure 8. Control Methods

SYNCHRONIZATION

The oscillator can be synchronized by an external pulse inserted in series with the timing capacitor. Program the free running frequency of the oscillator to be 10% to 15% slower than the desired synchronous frequency. The pulse width should be greater than 10 ns and less than half the discharge time of the oscillator. The rising edge of the CLK/LEB pin can be used to generate a synchronizing pulse for other chips. Note that the CLK/LEB pin no longer accepts an incoming synchronizing signal.

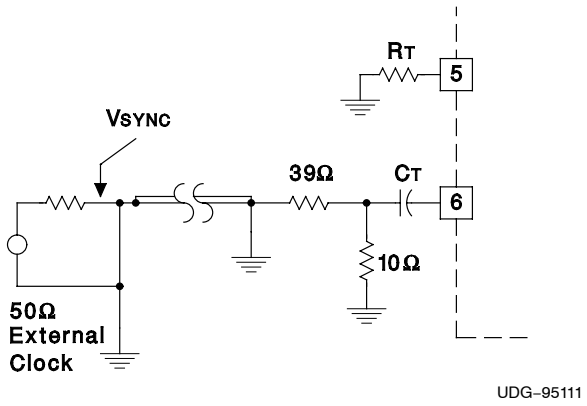

Figure 9. General Oscillator Synchronization

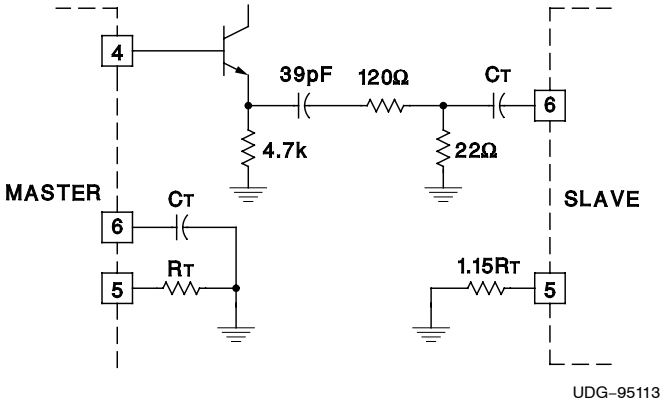

Figure 10. Two Unit Interface

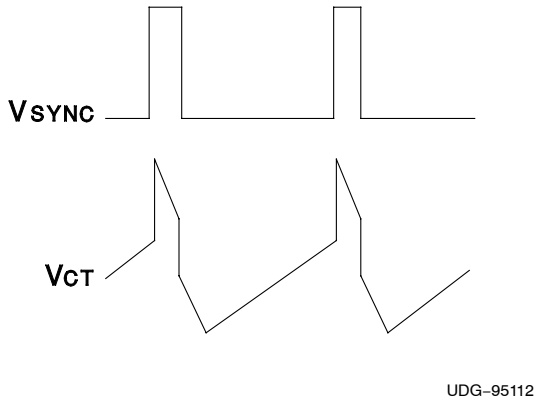

Figure 11. Operational Waveforms

HIGH CURRENT OUTPUTS

Each totem pole output of the UC3823A and UC3823AB, UC3825A, and UC3825B can deliver a 2-A peak current into a capacitive load. The output can slew a 1000-pF capacitor by 15 V in approximately 20 ns. Separate collector supply (VC) and power ground (PGND) pins help decouple the device's analog circuitry from the high-power gate drive noise. The use of 3-A Schottky diodes (1N5120, USD245, or equivalent) as shown in the Figure 13 from each output to both VC and PGND are recommended. The diodes clamp the output swing to the supply rails, necessary with any type of inductive/capacitive load, typical of a MOSFET gate. Schottky diodes must be used because a low forward voltage drop is required. DO NOT USE standard silicon diodes.

Although they are *single-ended* devices, two output drivers are available on the UC3823A and UC3823B devices. These can be *paralleled* by the use of a 0.5 Ω (noninductive) resistor connected in series with each output for a combined peak current of 4 A.

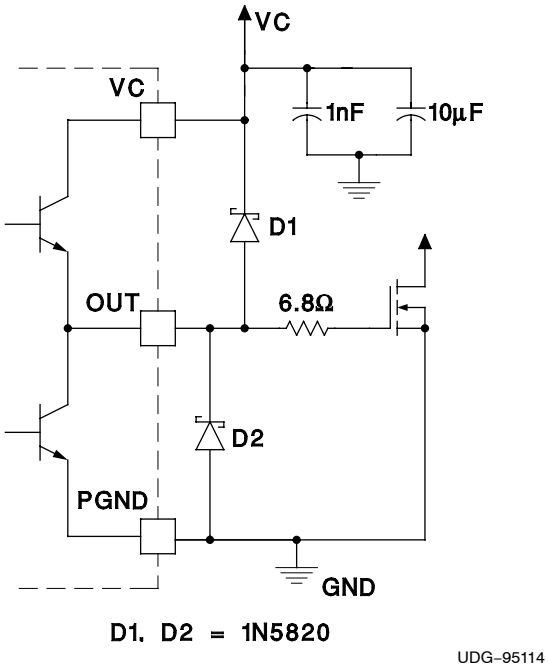

Figure 12. Power MOSFET Drive Circuit

GROUND PLANES

Each output driver of these devices is capable of 2-A peak currents. Careful layout is essential for correct operation of the chip. A ground plane must be employed. A unique section of the ground plane must be designated for high di/dt currents associated with the output stages. This point is the power ground to which the PGND pin is connected. Power ground can be separated from the rest of the ground plane and connected at a single point, although this is not necessary if the high di/dt paths are well understood and accounted for. VCC should be bypassed directly to power ground with a good high frequency capacitor. The sources of the power MOSFET should connect to power ground as should the return connection for input power to the system and the bulk input capacitor. The output should be clamped with a high current Schottky diode to both VCC and PGND. Nothing else should be connected to power ground.

VREF should be bypassed directly to the signal portion of the ground plane with a good high frequency capacitor. Low ESR/ESL ceramic 1-mF capacitors are recommended for both VCC and VREF. All analog circuitry should likewise be bypassed to the signal ground plane.

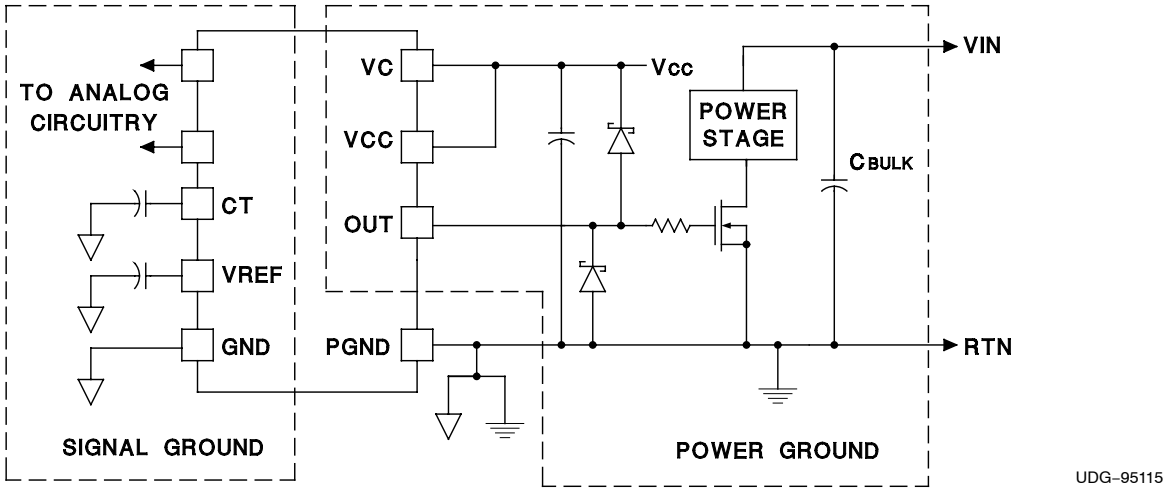

Figure 13. Ground Planes Diagram

OPEN LOOP TEST CIRCUIT

This test fixture is useful for exercising many functions of this device family and measuring their specifications. As with any wideband circuit, careful grounding and bypass procedures should be followed. The use of a ground plane is highly recommended.

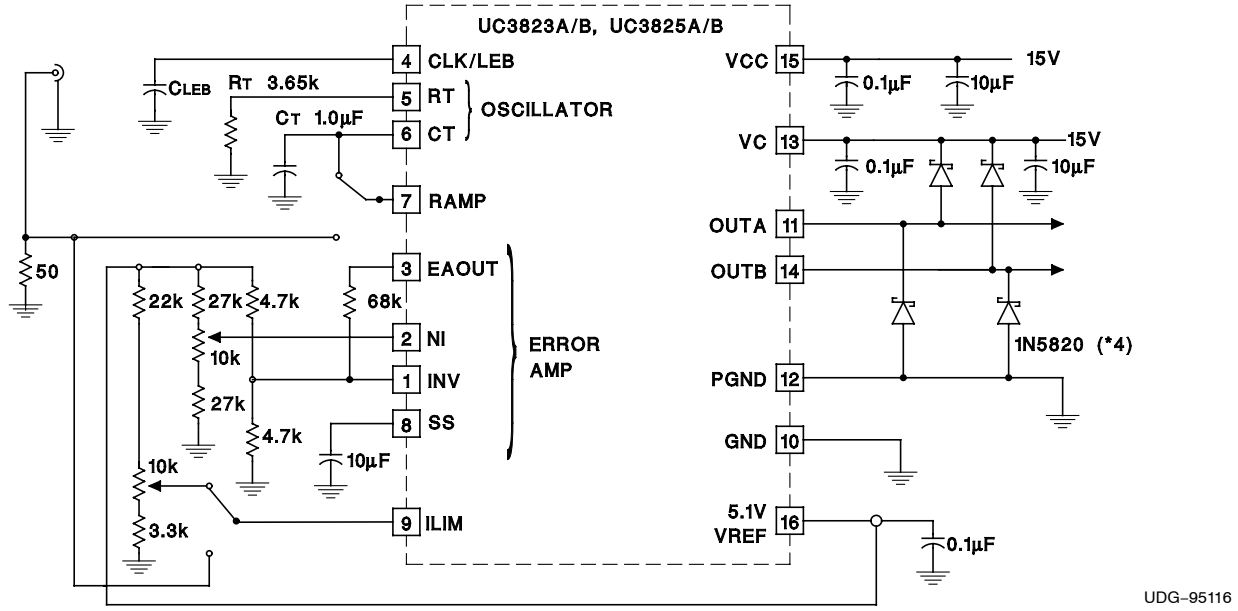

Figure 14. Open Loop Test Circuit Schematic

PACKAGING INFORMATION

Orderable Device	Status (1)	Package Type	Package Drawing	Pins	Package Qty	Eco Plan (2)	Lead/Ball Finish (6)	MSL Peak Temp (3)	Op Temp (°C)	Device Marking (4/5)	Samples
5962-87681022A	ACTIVE	LCCC	FK	20	1	TBD	POST-PLATE	N / A for Pkg Type	-55 to 125	5962-87681022A UC1825AL/883B	Samples
5962-8768102EA	ACTIVE	CDIP	J	16	1	TBD	A42	N / A for Pkg Type	-55 to 125	5962-8768102EA UC1825AJ/883B	Samples
5962-89905022A	ACTIVE	LCCC	FK	20	1	TBD	POST-PLATE	N / A for Pkg Type	-55 to 125	5962-89905022A UC1823AL/883B	Samples
5962-8990502EA	ACTIVE	CDIP	J	16	1	TBD	A42	N / A for Pkg Type	-55 to 125	5962-8990502EA UC1823AJ/883B	Samples
5962-8990502VEA	ACTIVE	CDIP	J	16	1	TBD	A42	N / A for Pkg Type	-55 to 125	5962-8990502VEA UC1823AJQMLV	Samples
UC1823AJ	ACTIVE	CDIP	J	16	1	TBD	A42	N / A for Pkg Type	-55 to 125	UC1823AJ	Samples
UC1823AJ883B	ACTIVE	CDIP	J	16	1	TBD	A42	N / A for Pkg Type	-55 to 125	5962-8990502EA UC1823AJ/883B	Samples
UC1823AL	ACTIVE	LCCC	FK	20	1	TBD	POST-PLATE	N / A for Pkg Type	-55 to 125	UC1823AL	Samples
UC1823AL883B	ACTIVE	LCCC	FK	20	1	TBD	POST-PLATE	N / A for Pkg Type	-55 to 125	5962-89905022A UC1823AL/883B	Samples
UC1825AJ	ACTIVE	CDIP	J	16	1	TBD	A42	N / A for Pkg Type	-55 to 125	UC1825AJ	Samples
UC1825AJ883B	ACTIVE	CDIP	J	16	1	TBD	A42	N / A for Pkg Type	-55 to 125	5962-8768102EA UC1825AJ/883B	Samples
UC1825AL	ACTIVE	LCCC	FK	20	1	TBD	POST-PLATE	N / A for Pkg Type	-55 to 125	UC1825AL	Samples
UC1825AL883B	ACTIVE	LCCC	FK	20	1	TBD	POST-PLATE	N / A for Pkg Type	-55 to 125	5962-87681022A UC1825AL/883B	Samples
UC2823ADW	ACTIVE	SOIC	DW	16	40	Green (RoHS & no Sb/Br)	CU NIPDAU	Level-2-260C-1 YEAR	-40 to 85	UC2823ADW	Samples

Orderable Device	Status (1)	Package Type	Package Drawing	Pins	Package Qty	Eco Plan (2)	Lead/Ball Finish (6)	MSL Peak Temp (3)	Op Temp (°C)	Device Marking (4/5)	Samples
UC2823ADWTR	ACTIVE	SOIC	DW	16	2000	Green (RoHS & no Sb/Br)	CU NIPDAU	Level-2-260C-1 YEAR	-40 to 85	UC2823ADW	Samples
UC2823AN	ACTIVE	PDIP	N	16	25	Green (RoHS & no Sb/Br)	CU NIPDAU	N / A for Pkg Type	-40 to 85	UC2823AN	Samples
UC2823BDW	ACTIVE	SOIC	DW	16	40	Green (RoHS & no Sb/Br)	CU NIPDAU	Level-2-260C-1 YEAR	-40 to 85	UC2823BDW	Samples
UC2825ADW	ACTIVE	SOIC	DW	16	40	Green (RoHS & no Sb/Br)	CU NIPDAU	Level-2-260C-1 YEAR	-40 to 85	UC2825ADW	Samples
UC2825ADWG4	ACTIVE	SOIC	DW	16	40	Green (RoHS & no Sb/Br)	CU NIPDAU	Level-2-260C-1 YEAR	-40 to 85	UC2825ADW	Samples
UC2825ADWTR	ACTIVE	SOIC	DW	16	2000	Green (RoHS & no Sb/Br)	CU NIPDAU	Level-2-260C-1 YEAR	-40 to 85	UC2825ADW	Samples
UC2825ADWTRG4	ACTIVE	SOIC	DW	16	2000	Green (RoHS & no Sb/Br)	CU NIPDAU	Level-2-260C-1 YEAR	-40 to 85	UC2825ADW	Samples
UC2825AN	ACTIVE	PDIP	N	16	25	Green (RoHS & no Sb/Br)	CU NIPDAU	N / A for Pkg Type	-40 to 85	UC2825AN	Samples
UC2825ANG4	ACTIVE	PDIP	N	16	25	Green (RoHS & no Sb/Br)	CU NIPDAU	N / A for Pkg Type	-40 to 85	UC2825AN	Samples
UC2825BDW	ACTIVE	SOIC	DW	16	40	Green (RoHS & no Sb/Br)	CU NIPDAU	Level-2-260C-1 YEAR	-40 to 85	UC2825BDW	Samples
UC2825BDWG4	ACTIVE	SOIC	DW	16	40	Green (RoHS & no Sb/Br)	CU NIPDAU	Level-2-260C-1 YEAR	-40 to 85	UC2825BDW	Samples
UC2825BN	ACTIVE	PDIP	N	16	25	Green (RoHS & no Sb/Br)	CU NIPDAU	N / A for Pkg Type	-40 to 85	UC2825BN	Samples
UC3823ADW	ACTIVE	SOIC	DW	16	40	Green (RoHS & no Sb/Br)	CU NIPDAU	Level-2-260C-1 YEAR	0 to 70	UC3823ADW	Samples
UC3823ADWTR	ACTIVE	SOIC	DW	16	2000	Green (RoHS & no Sb/Br)	CU NIPDAU	Level-2-260C-1 YEAR	0 to 70	UC3823ADW	Samples
UC3823AN	ACTIVE	PDIP	N	16	25	Green (RoHS & no Sb/Br)	CU NIPDAU	N / A for Pkg Type	0 to 70	UC3823AN	Samples
UC3823BDW	ACTIVE	SOIC	DW	16	40	Green (RoHS & no Sb/Br)	CU NIPDAU	Level-2-260C-1 YEAR	0 to 70	UC3823BDW	Samples
UC3823BDWTR	ACTIVE	SOIC	DW	16	2000	Green (RoHS & no Sb/Br)	CU NIPDAU	Level-2-260C-1 YEAR	0 to 70	UC3823BDW	Samples
UC3825ADW	ACTIVE	SOIC	DW	16	40	Green (RoHS & no Sb/Br)	CU NIPDAU	Level-2-260C-1 YEAR	0 to 70	UC3825ADW	Samples

Orderable Device	Status (1)	Package Type	Package Drawing	Pins	Package Qty	Eco Plan (2)	Lead/Ball Finish (6)	MSL Peak Temp (3)	Op Temp (°C)	Device Marking (4/5)	Samples
UC3825ADWG4	ACTIVE	SOIC	DW	16	40	Green (RoHS & no Sb/Br)	CU NIPDAU	Level-2-260C-1 YEAR	0 to 70	UC3825ADW	Samples
UC3825ADWTR	ACTIVE	SOIC	DW	16	2000	Green (RoHS & no Sb/Br)	CU NIPDAU	Level-2-260C-1 YEAR	0 to 70	UC3825ADW	Samples
UC3825ADWTRG4	ACTIVE	SOIC	DW	16	2000	Green (RoHS & no Sb/Br)	CU NIPDAU	Level-2-260C-1 YEAR	0 to 70	UC3825ADW	Samples
UC3825AN	ACTIVE	PDIP	N	16	25	Green (RoHS & no Sb/Br)	CU NIPDAU	N / A for Pkg Type	0 to 70	UC3825AN	Samples
UC3825ANG4	ACTIVE	PDIP	N	16	25	Green (RoHS & no Sb/Br)	CU NIPDAU	N / A for Pkg Type	0 to 70	UC3825AN	Samples
UC3825BDW	ACTIVE	SOIC	DW	16	40	Green (RoHS & no Sb/Br)	CU NIPDAU	Level-2-260C-1 YEAR	0 to 70	UC3825BDW	Samples
UC3825BDWTR	ACTIVE	SOIC	DW	16	2000	Green (RoHS & no Sb/Br)	CU NIPDAU	Level-2-260C-1 YEAR	0 to 70	UC3825BDW	Samples
UC3825BN	ACTIVE	PDIP	N	16	25	Green (RoHS & no Sb/Br)	CU NIPDAU	N / A for Pkg Type	0 to 70	UC3825BN	Samples

(1) The marketing status values are defined as follows:
ACTIVE: Product device recommended for new designs.
LIFEBUY: TI has announced that the device will be discontinued, and a lifetime-buy period is in effect.
NRND: Not recommended for new designs. Device is in production to support existing customers, but TI does not recommend using this part in a new design.
PREVIEW: Device has been announced but is not in production. Samples may or may not be available.
OBSOLETE: TI has discontinued the production of the device.

(2) **RoHS:** TI defines "RoHS" to mean semiconductor products that are compliant with the current EU RoHS requirements for all 10 RoHS substances, including the requirement that RoHS substance do not exceed 0.1% by weight in homogeneous materials. Where designed to be soldered at high temperatures, "RoHS" products are suitable for use in specified lead-free processes. TI may reference these types of products as "Pb-Free".
RoHS Exempt: TI defines "RoHS Exempt" to mean products that contain lead but are compliant with EU RoHS pursuant to a specific EU RoHS exemption.
Green: TI defines "Green" to mean the content of Chlorine (Cl) and Bromine (Br) based flame retardants meet JS709B low halogen requirements of <=1000ppm threshold. Antimony trioxide based flame retardants must also meet the <=1000ppm threshold requirement.

(3) MSL, Peak Temp. - The Moisture Sensitivity Level rating according to the JEDEC industry standard classifications, and peak solder temperature.

(4) There may be additional marking, which relates to the logo, the lot trace code information, or the environmental category on the device.

(5) Multiple Device Markings will be inside parentheses. Only one Device Marking contained in parentheses and separated by a "~" will appear on a device. If a line is indented then it is a continuation of the previous line and the two combined represent the entire Device Marking for that device.

(6) Lead/Ball Finish - Orderable Devices may have multiple material finish options. Finish options are separated by a vertical ruled line. Lead/Ball Finish values may wrap to two lines if the finish value exceeds the maximum column width.

Important Information and Disclaimer: The information provided on this page represents TI's knowledge and belief as of the date that it is provided. TI bases its knowledge and belief on information provided by third parties, and makes no representation or warranty as to the accuracy of such information. Efforts are underway to better integrate information from third parties. TI has taken and continues to take reasonable steps to provide representative and accurate information but may not have conducted destructive testing or chemical analysis on incoming materials and chemicals. TI and TI suppliers consider certain information to be proprietary, and thus CAS numbers and other limited information may not be available for release.

In no event shall TI's liability arising out of such information exceed the total purchase price of the TI part(s) at issue in this document sold by TI to Customer on an annual basis.

OTHER QUALIFIED VERSIONS OF UC1823A, UC1823A-SP, UC1825A, UC2825A, UC3823A, UC3825A :

- Catalog: UC3823A, UC1823A, UC3825A
- Automotive: UC2825A-Q1
- Enhanced Product: UC2825A-EP
- Military: UC1823A, UC1825A
- Space: UC1823A-SP, UC1825A-SP

NOTE: Qualified Version Definitions:

- Catalog - TI's standard catalog product
- Automotive - Q100 devices qualified for high-reliability automotive applications targeting zero defects
- Enhanced Product - Supports Defense, Aerospace and Medical Applications
- Military - QML certified for Military and Defense Applications
- Space - Radiation tolerant, ceramic packaging and qualified for use in Space-based application

TAPE AND REEL INFORMATION

REEL DIMENSIONS

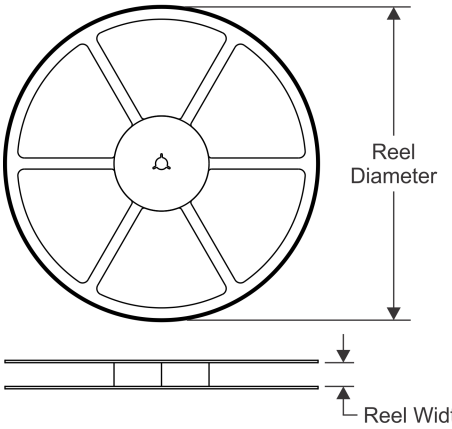

TAPE DIMENSIONS

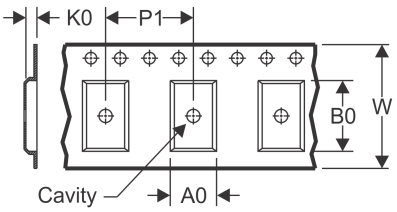

A0	Dimension designed to accommodate the component width
B0	Dimension designed to accommodate the component length
K0	Dimension designed to accommodate the component thickness
W	Overall width of the carrier tape
P1	Pitch between successive cavity centers

QUADRANT ASSIGNMENTS FOR PIN 1 ORIENTATION IN TAPE

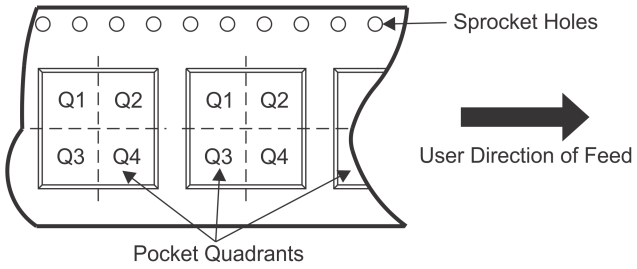

*All dimensions are nominal

Device	Package Type	Package Drawing	Pins	SPQ	Reel Diameter (mm)	Reel Width W1 (mm)	A0 (mm)	B0 (mm)	K0 (mm)	P1 (mm)	W (mm)	Pin1 Quadrant
UC2823ADWTR	SOIC	DW	16	2000	330.0	16.4	10.75	10.7	2.7	12.0	16.0	Q1
UC2825ADWTR	SOIC	DW	16	2000	330.0	16.4	10.75	10.7	2.7	12.0	16.0	Q1
UC3823ADWTR	SOIC	DW	16	2000	330.0	16.4	10.75	10.7	2.7	12.0	16.0	Q1
UC3823BDWTR	SOIC	DW	16	2000	330.0	16.4	10.75	10.7	2.7	12.0	16.0	Q1
UC3825ADWTR	SOIC	DW	16	2000	330.0	16.4	10.75	10.7	2.7	12.0	16.0	Q1
UC3825BDWTR	SOIC	DW	16	2000	330.0	16.4	10.75	10.7	2.7	12.0	16.0	Q1

TAPE AND REEL BOX DIMENSIONS

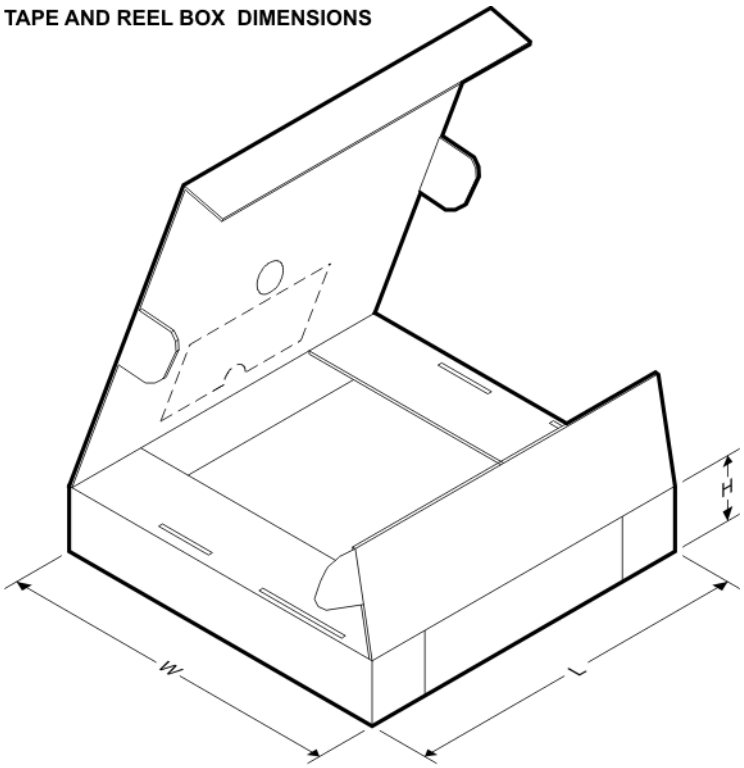

*All dimensions are nominal

Device	Package Type	Package Drawing	Pins	SPQ	Length (mm)	Width (mm)	Height (mm)
UC2823ADWTR	SOIC	DW	16	2000	367.0	367.0	38.0
UC2825ADWTR	SOIC	DW	16	2000	367.0	367.0	38.0
UC3823ADWTR	SOIC	DW	16	2000	367.0	367.0	38.0
UC3823BDWTR	SOIC	DW	16	2000	367.0	367.0	38.0
UC3825ADWTR	SOIC	DW	16	2000	367.0	367.0	38.0
UC3825BDWTR	SOIC	DW	16	2000	367.0	367.0	38.0

IMPORTANT NOTICE AND DISCLAIMER

TI PROVIDES TECHNICAL AND RELIABILITY DATA (INCLUDING DATASHEETS), DESIGN RESOURCES (INCLUDING REFERENCE DESIGNS), APPLICATION OR OTHER DESIGN ADVICE, WEB TOOLS, SAFETY INFORMATION, AND OTHER RESOURCES “AS IS” AND WITH ALL FAULTS, AND DISCLAIMS ALL WARRANTIES, EXPRESS AND IMPLIED, INCLUDING WITHOUT LIMITATION ANY IMPLIED WARRANTIES OF MERCHANTABILITY, FITNESS FOR A PARTICULAR PURPOSE OR NON-INFRINGEMENT OF THIRD PARTY INTELLECTUAL PROPERTY RIGHTS.

These resources are intended for skilled developers designing with TI products. You are solely responsible for (1) selecting the appropriate TI products for your application, (2) designing, validating and testing your application, and (3) ensuring your application meets applicable standards, and any other safety, security, or other requirements. These resources are subject to change without notice. TI grants you permission to use these resources only for development of an application that uses the TI products described in the resource. Other reproduction and display of these resources is prohibited. No license is granted to any other TI intellectual property right or to any third party intellectual property right. TI disclaims responsibility for, and you will fully indemnify TI and its representatives against, any claims, damages, costs, losses, and liabilities arising out of your use of these resources.

TI’s products are provided subject to TI’s Terms of Sale (www.ti.com/legal/termsofsale.html) or other applicable terms available either on ti.com or provided in conjunction with such TI products. TI’s provision of these resources does not expand or otherwise alter TI’s applicable warranties or warranty disclaimers for TI products.

Mailing Address: Texas Instruments, Post Office Box 655303, Dallas, Texas 75265
Copyright © 2019, Texas Instruments Incorporated

Looking for pricing, stock, or lifecycle information?

Click below to explore more details on WIN SOURCE:

- View UC2823ADWTR on WIN SOURCE
- Texas Instruments Information

Optimize Your Supply Chain with WIN SOURCE Solutions

- Global Sourcing Solution
- Obsolete Management
- Cost Control Management
- Shortage Management
- Alternative Solution
- Excess Inventory Management