WINSOURCE ELECTRONICS

THE DATASHEET OF

TMX320C28343ZHH

www.win-source.net 0086-755-83957316

TMS320C2834x Delfino Microcontrollers

1 Features

- High-Performance Static CMOS Technology
  - Up to 300 MHz (3.33-ns Cycle Time)
  - 1.1-V/1.2-V Core, 3.3-V I/O, 1.8-V PLL/ Oscillator Design
- High-Performance 32-Bit CPU (TMS320C28x)
  - IEEE 754 Single-Precision Floating-Point Unit (FPU)
  - 16 × 16 and 32 × 32 MAC Operations
  - 16 × 16 Dual MAC
  - Harvard Bus Architecture
  - Fast Interrupt Response and Processing
  - Code-Efficient (in C/C++ and Assembly)
- Six-Channel DMA Controller (for McBSP, XINTF, and SARAM)
- 16-Bit or 32-Bit External Interface (XINTF)
  - More Than 2M × 16 Address Reach
- On-Chip Memory
  - Up to 258K × 16 SARAM
  - 8K × 16 Boot ROM
- Clock and System Control
  - On-Chip Oscillator
  - Watchdog Timer Module
- Peripheral Interrupt Expansion (PIE) Block That Supports All 64 Peripheral Interrupts
- Endianness: Little Endian
- Enhanced Control Peripherals
  - Eighteen Enhanced Pulse Width Modulator (ePWM) Outputs
    - Dedicated 16-Bit Time-Based Counter With Period and Frequency Control
    - Single-Edge, Dual-Edge Symmetric, or Dual-Edge Asymmetric Outputs
    - Dead-Band Generation
    - PWM Chopping by High-Frequency Carrier
    - Trip Zone Input
    - Up to 9 HRPWM Outputs With 55-ps MEP Resolution at V_{DD} = 1.1 V (65 ps at 1.2 V)
  - Six 32-Bit Enhanced Capture (eCAP) Modules
    - Configurable as 3 Capture Inputs or 3 Auxiliary Pulse Width Modulator Outputs
    - Single-Shot Capture of up to Four Event Timestamps
  - Three 32-Bit Quadrature Encoder Pulse (QEP) Modules
  - Six 32-Bit Timers and Nine 16-Bit Timers
- Three 32-Bit CPU Timers
- Serial Port Peripherals
  - Up to 2 CAN Modules
  - Up to 3 SCI (UART) Modules
  - Up to 2 McBSP Modules (Configurable as SPI)
  - Up to 2 SPI Modules
  - One Inter-Integrated Circuit (I2C) Bus
- External ADC Interface
- Up to 88 Individually Programmable, Multiplexed GPIO Pins With Input Filtering
- Advanced Emulation Features
  - Analysis and Breakpoint Functions
  - Real-Time Debug Using Hardware
- Package Options:
  - 256-Ball Plastic Ball Grid Array (BGA) (ZFE)
  - 179-Ball MicroStar BGA™ (ZHH)
- Temperature Options:
  - T: –40°C to 105°C (ZFE, ZHH)
  - S: –40°C to 125°C (ZFE)
  - Q: –40°C to 125°C (ZFE) (AEC Q100 Qualification for Automotive Applications)

2 Applications

- Industrial AC Inverter Drives
- Industrial Servo Amplifiers and Controllers
- Computer Numerical Control (CNC) Machining
- Uninterruptible and Server Power Supplies
- Telecom Equipment Power
- Solar Inverters

3 Description

The TMS320C2834x (C2834x) Delfino™ microcontroller unit (MCU) devices build on TI's existing F2833x high-performance floating-point microcontrollers. The C2834x delivers up to 300 MHz of floating-point performance, and has up to 516KB of on-chip RAM. Designed for real-time control applications, the C2834x is based on the C28x core, making it code-compatible with all C28x microcontrollers. The on-chip peripherals and low-latency core make the C2834x an excellent solution for performance-hungry real-time control applications.

An IMPORTANT NOTICE at the end of this data sheet addresses availability, warranty, changes, use in safety-critical applications, intellectual property matters and other important disclaimers. PRODUCTION DATA.

The TMS320C28346, TMS320C28345, TMS320C28344, TMS320C28343, TMS320C28342, and TMS320C28341 devices, members of the Delfino™ MCU generation, are highly integrated, high-performance solutions for demanding control applications.

Throughout this document, the devices are abbreviated as C28346, C28345, C28344, C28343, C28342, and C28341, respectively. Device Comparison provides a summary of features for each device.

Device Information (1)

PART NUMBER	PACKAGE	BODY SIZE
TMS320C28346ZFE	BGA (256)	17.0 mm × 17.0 mm
TMS320C28345ZFE	BGA (256)	17.0 mm × 17.0 mm
TMS320C28344ZFE	BGA (256)	17.0 mm × 17.0 mm
TMS320C28343ZFE	BGA (256)	17.0 mm × 17.0 mm
TMS320C28342ZFE	BGA (256)	17.0 mm × 17.0 mm
TMS320C28341ZFE	BGA (256)	17.0 mm × 17.0 mm
TMS320C28346ZEP	BGA (256)	17.0 mm × 17.0 mm
TMS320C28345ZEP	BGA (256)	17.0 mm × 17.0 mm
TMS320C28344ZEP	BGA (256)	17.0 mm × 17.0 mm
TMS320C28343ZEP	BGA (256)	17.0 mm × 17.0 mm
TMS320C28342ZEP	BGA (256)	17.0 mm × 17.0 mm
TMS320C28341ZEP	BGA (256)	17.0 mm × 17.0 mm
TMS320C28345ZHH	BGA MicroStar (179)	12.0 mm × 12.0 mm
TMS320C28343ZHH	BGA MicroStar (179)	12.0 mm × 12.0 mm
TMS320C28341ZHH	BGA MicroStar (179)	12.0 mm × 12.0 mm

(1) For more information on these devices, see Mechanical, Packaging, and Orderable Information.

Copyright © 2021 Texas Instruments Incorporated

3.1 Functional Block Diagram

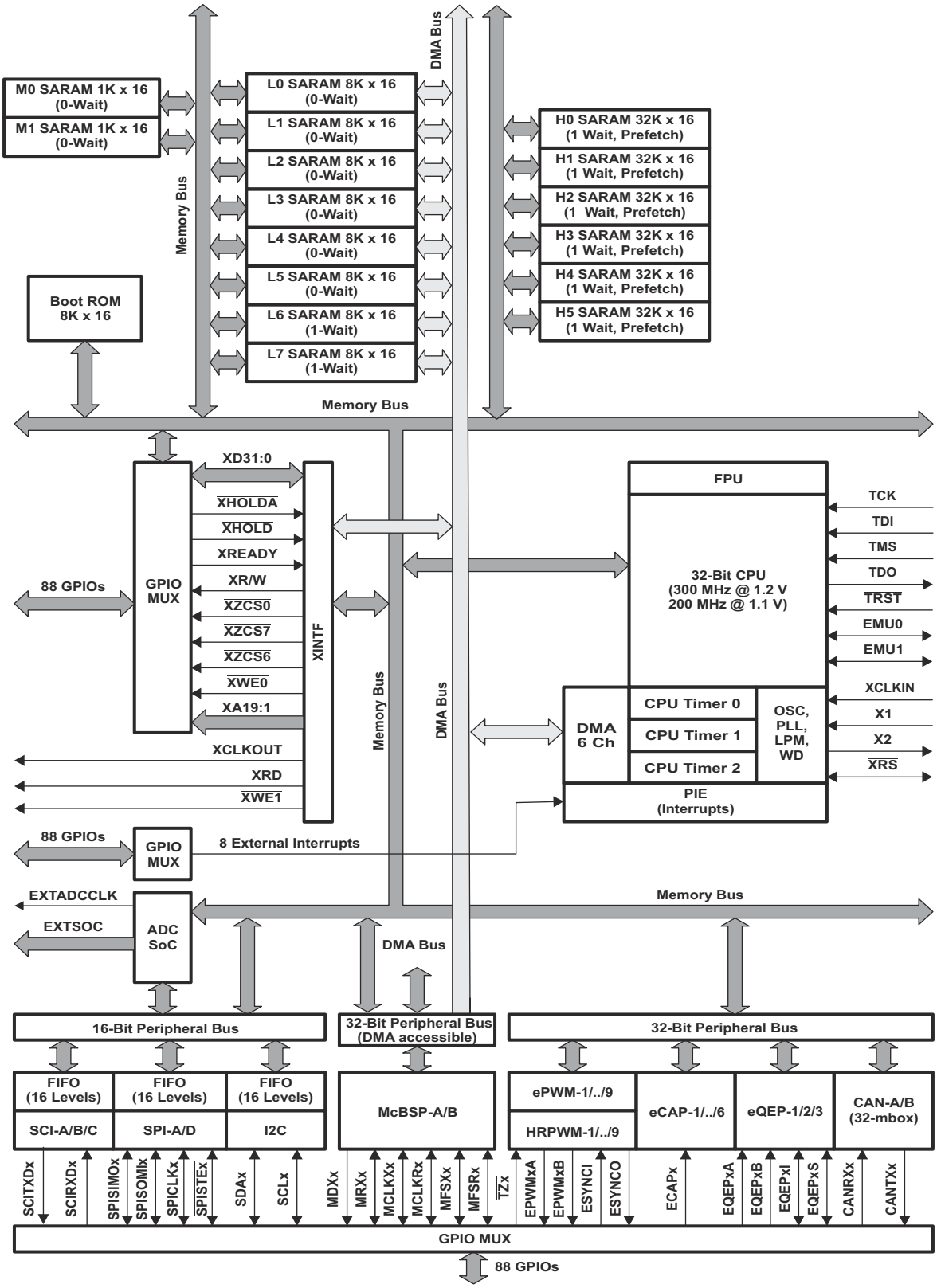

Figure 3-1. Functional Block Diagram

Table of Contents

1 Features....1
2 Applications....1
3 Description....1
3.1 Functional Block Diagram....3
4 Revision History....5
5 Device Comparison....6
5.1 Related Products....6
6 Terminal Configuration and Functions....8
6.1 Pin Diagrams....8
6.2 Signal Descriptions....16
7 Specifications....29
7.1 Absolute Maximum Ratings (1) (2)....29
7.2 ESD Ratings – Automotive....29
7.3 ESD Ratings – Commercial....29
7.4 Recommended Operating Conditions....30
7.5 Power Consumption Summary....31
7.6 Electrical Characteristics....34
7.7 Thermal Resistance Characteristics....35
7.8 Thermal Design Considerations....36
7.9 Timing and Switching Characteristics....37
8 Detailed Description....86
8.1 Brief Descriptions....86
8.2 Peripherals....92
8.3 Memory Maps....130
8.4 Register Map....136
8.5 Interrupts....139
8.6 System Control....144
8.7 Low-Power Modes Block....151
9 Applications, Implementation, and Layout....152
9.1 TI Design or Reference Design....152
10 Device and Documentation Support....153
10.1 Getting Started....153
10.2 Device and Development Support Tool Nomenclature....153
10.3 Tools and Software....155
10.4 Documentation Support....156
10.5 Support Resources....158
10.6 Trademarks....158
10.7 Electrostatic Discharge Caution....158
10.8 Glossary....159
11 Mechanical, Packaging, and Orderable Information....160
11.1 Packaging Information....160

Copyright © 2021 Texas Instruments Incorporated

4 Revision History

Changes from August 22, 2018 to February 1, 2021 (from Revision E (August 2018) to Revision F (February 2021)) **Page**

- Added Q1 Part Numbers 0
- Table 5-1: Added Q1 Part Numbers 6
- Section 7.9.4.5.1.1 (SPI Master Mode External Timing (Clock Phase = 0)): Updated MIN value (for both BRR EVEN and BRR ODD) for Parameter 23, $t_{d(SPC)M}$ 56
- Section 7.9.4.5.1.2 (SPI Master Mode External Timing (Clock Phase = 1)): Updated MIN value (for both BRR EVEN and BRR ODD) for Parameter 23, $t_{d(SPC)M}$ 58
- Figure 10-1: Added GPN information 153

Copyright © 2021 Texas Instruments Incorporated

5 Device Comparison

Table 5-1. Device Comparison

FEATURE		TYPE(1)	C28346 C28346-Q1 (300 MHz)	C28345 (200 MHz)		C28344 (300 MHz)	C28343 C28343-Q1 (200 MHz)		C28342 (300 MHz)	C28341 (200 MHz)	
Package type		–	256-ball ZFE BGA(2)	256-ball ZFE BGA(2)	179-ball ZHH BGA	256-ball ZFE BGA(2)	256-ball ZFE BGA(2)	179-ball ZHH BGA	256-ball ZFE BGA(2)	256-ball ZFE BGA(2)	179-ball ZHH BGA
Instruction cycle		–	3.33 ns	5 ns		3.33 ns	5 ns		3.33 ns	5 ns	
Floating-point unit		–	Yes	Yes		Yes	Yes		Yes	Yes	
Single-access RAM (SARAM) (16-bit word)		–	258K	258K		130K	130K		98K	98K	
Code security for on-chip SARAM blocks		–	No	No		No	No		No	No	
Boot ROM (8K ×16)		–	Yes	Yes		Yes	Yes		Yes	Yes	
16-/32-bit External Interface (XINTF)		1	Yes	Yes		Yes	Yes		Yes	Yes	
6-channel Direct Memory Access (DMA)		0	Yes	Yes		Yes	Yes		Yes	Yes	
PWM channels		0	ePWM1/2/3/ 4/5/6/7/8/9	ePWM1/2/3/ 4/5/6/7/8/9		ePWM1/2/3/ 4/5/6/7/8/9	ePWM1/2/3/ 4/5/6/7/8/9		ePWM1/2/3/ 4/5/6	ePWM1/2/3/ 4/5/6	
HRPWM channels		0	ePWM1A/2A/ 3A/4A/5A/6A/ 7A/8A/9A	ePWM1A/2A/ 3A/4A/5A/6A/ 7A/8A/9A		ePWM1A/2A/ 3A/4A/5A/6A/ 7A/8A/9A	ePWM1A/2A/ 3A/4A/5A/6A/ 7A/8A/9A		ePWM1A/2A/ 3A/4A/5A/6A	ePWM1A/2A/ 3A/4A/5A/6A	
32-bit capture inputs or auxiliary PWM outputs		0	6	6		6	6		4	4	
32-bit QEP channels (four inputs/ channel)		0	3	3		3	3		2	2	
Watchdog timer		–	Yes	Yes		Yes	Yes		Yes	Yes	
External ADC interface		–	Yes	Yes		Yes	Yes		Yes	Yes	
32-bit CPU timers		–	3	3		3	3		3	3	
Multichannel Buffered Serial Port (McBSP)/SPI		1	2	2		2	2		1	1	
Serial Peripheral Interface (SPI)		0	2	2		2	2		2	2	
Serial Communications Interface (SCI)		0	3	3		3	3		3	3	
Enhanced Controller Area Network (eCAN)		0	2	2		2	2		2	2	
Inter-Integrated Circuit (I2C)		0	1	1		1	1		1	1	
General-Purpose Input/Output (GPIO) pins (shared)		–	88	88		88	88		88	88	
External interrupts		–	8	8		8	8		8	8	
Temperature options	T: –40°C to 105°C	–	ZFE	ZFE	ZHH	ZFE	ZFE	ZHH	ZFE	ZFE	ZHH
	S: –40°C to 125°C	–	ZFE	ZFE	–	ZFE	ZFE	–	ZFE	ZFE	–
	Q: –40°C to 125°C (AEC Q100 qualification)	–	ZFE	ZFE	–	ZFE	ZFE	–	ZFE	ZFE	–

(1) A type change represents a major functional feature difference in a peripheral module. Within a peripheral type, there may be minor differences between devices that do not affect the basic functionality of the module. These device-specific differences are listed in the *C2000 Real-Time Control Peripherals Reference Guide* and in the peripheral reference guides.

(2) TMX samples will come with the ZEP designator. The designator will change to ZFE after TMS.

5.1 Related Products

For information about other devices in the Delfino family of products, see the following links:

Original Delfino™ series:

TMS320F2833x Delfino™ Microcontrollers

The F2833x series is the original Delfino MCU. It is the first C2000™ MCU that is offered with a floating-point unit (FPU). It has the first-generation ePWM timers that are used throughout the rest of the Delfino and Piccolo™ families. The 12.5-MSPS, 12-bit ADC is still class-leading for an integrated analog-to-digital converter. The

Copyright © 2021 Texas Instruments Incorporated

F2833x has a 150-MHz CPU and up to 512KB of on-chip Flash. It is available in a 176-pin QFP or 179-ball BGA package.

TMS320C2834x Delfino™ Microcontrollers
The C2834x series removes the on-chip Flash memory and integrated ADC to enable the fastest available clock speeds of up to 300 MHz. It is available in a 179-ball BGA or 256-ball BGA package.

Newest Delfino™ series:

TMS320F2837xD Delfino™ Microcontrollers
The F2837xD series sets a new standard for performance with dual subsystems. Each subsystem consists of a C28x CPU and a parallel control law accelerator (CLA), each running at 200 MHz. Enhancing performance are TMU and VCU accelerators. New capabilities include multiple 16-bit/12-bit mode ADCs, DAC, Sigma-Delta filters, USB, configurable logic block (CLB), on-chip oscillators, and enhanced versions of all peripherals. The F2837xD is available with up to 1MB of Flash. It is available in a 176-pin QFP or 337-pin BGA package.

TMS320F2837xS Delfino™ Microcontrollers
The F2837xS series is a pin-to-pin compatible version of F2837xD but with only one C28x-CPU-and-CLA subsystem enabled. It is also available in a 100-pin QFP to enable compatibility with the Piccolo™ TMS320F2807x series.

Copyright © 2021 Texas Instruments Incorporated

6 Terminal Configuration and Functions

6.1 Pin Diagrams

The 179-ball ZHH ball grid array (BGA) terminal assignments are shown in Figure 6-1 through Figure 6-4. The 256-ball ZFE plastic BGA terminal assignments are shown in Figure 6-5 through Figure 6-8. Table 6-1 describes the function(s) of each pin.

	1	2	3	4	5	6	7	
P	EXTSOC2B	EXTSOC3B	GPIO19/ SPISTEA/ SCIRXDB/ CANTXA	GPIO23/ EQEP1I/ MFSXA/ SCIRXDB	GPIO24/ ECAP1/ EQEP2A/ MDXB	GPIO32/ SDAA/ EPWMSYNCI/ ADCSOCAO	**V_{DD}**	P
N	EXTSOC1A	EXTSOC3A	EXTADCCLK	GPIO22/ EQEP1S/ MCLKXA/ SCITXDB	**V_{DD}**	GPIO33/ SCLA/ EPWMSYNCO/ ADCSOCBO	TDO	N
M	**V_{DD}**	EXTSOC2A	EXTSOC1B	GPIO21/ EQEP1B/ MDRA/ CANRXB	GPIO25/ ECAP2/ EQEP2B/ MDRB	GPIO27/ ECAP4/ EQEP2S/ MFSXB	TRST	M
L	GPIO18/ SPICLKA/ SCITXDB/ CANRXA	**V_{DDIO}**	**V_{SS}**	GPIO20/ EQEP1A/ MDXA/ CANTXB	**V_{SS}**	TDI	**V_{SS}**	L
K	**V_{SS}**	GPIO15/ TZ4/XHOLDA/ SCIRXDB/ MFSXB	**V_{DD}**	GPIO16/ SPISIMOA/ CANTXB/ TZ5	**V_{DDIO}**	GPIO26/ ECAP3/ EQEP2I/ MCLKXB	**V_{DDIO}**	K
J	**V_{DDIO}**	**V_{SS}**	**V_{DD}**	**V_{DD}**	GPIO17/ SPISOMIA/ CANRXB/ TZ6	6	7	J
H	**V_{SS}**	GPIO12/ TZ1/ CANTXB/ MDXB	GPIO11/ EPWM6B/ SCIRXDB/ ECAP4	GPIO13/ TZ2/ CANRXB/ MDRB	GPIO14/ TZ3/XHOLD/ SCITXDB/ MCLKXB			H
	1	2	3	4	5			

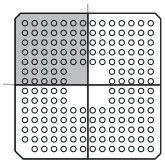

Figure 6-1. C2834x 179-Ball ZHH MicroStar BGA Upper-Left Quadrant (Bottom Vlew)

Copyright © 2021 Texas Instruments Incorporated

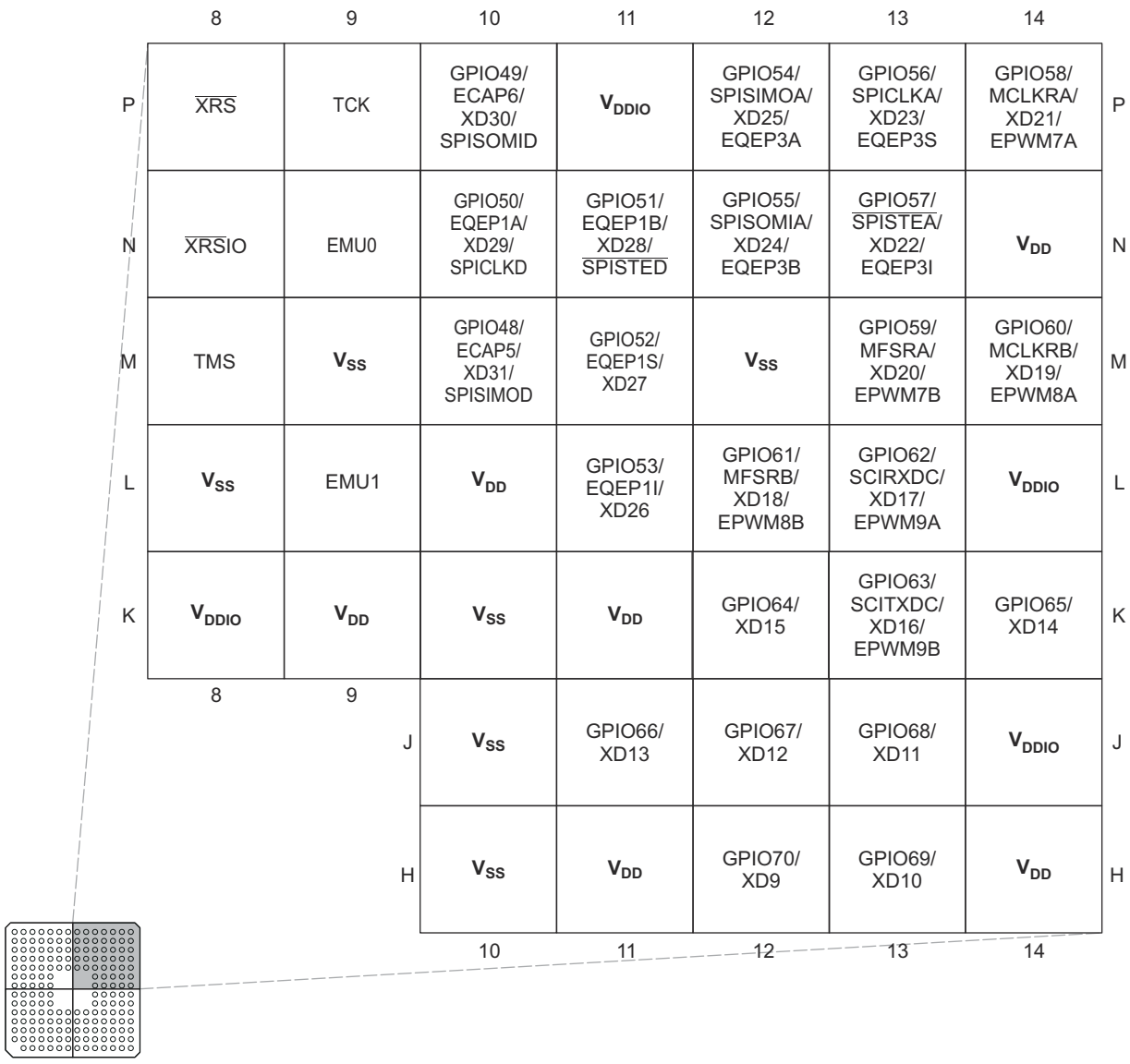

Figure 6-2. C2834x 179-Ball ZHH MicroStar BGA Upper-Right Quadrant (Bottom View)

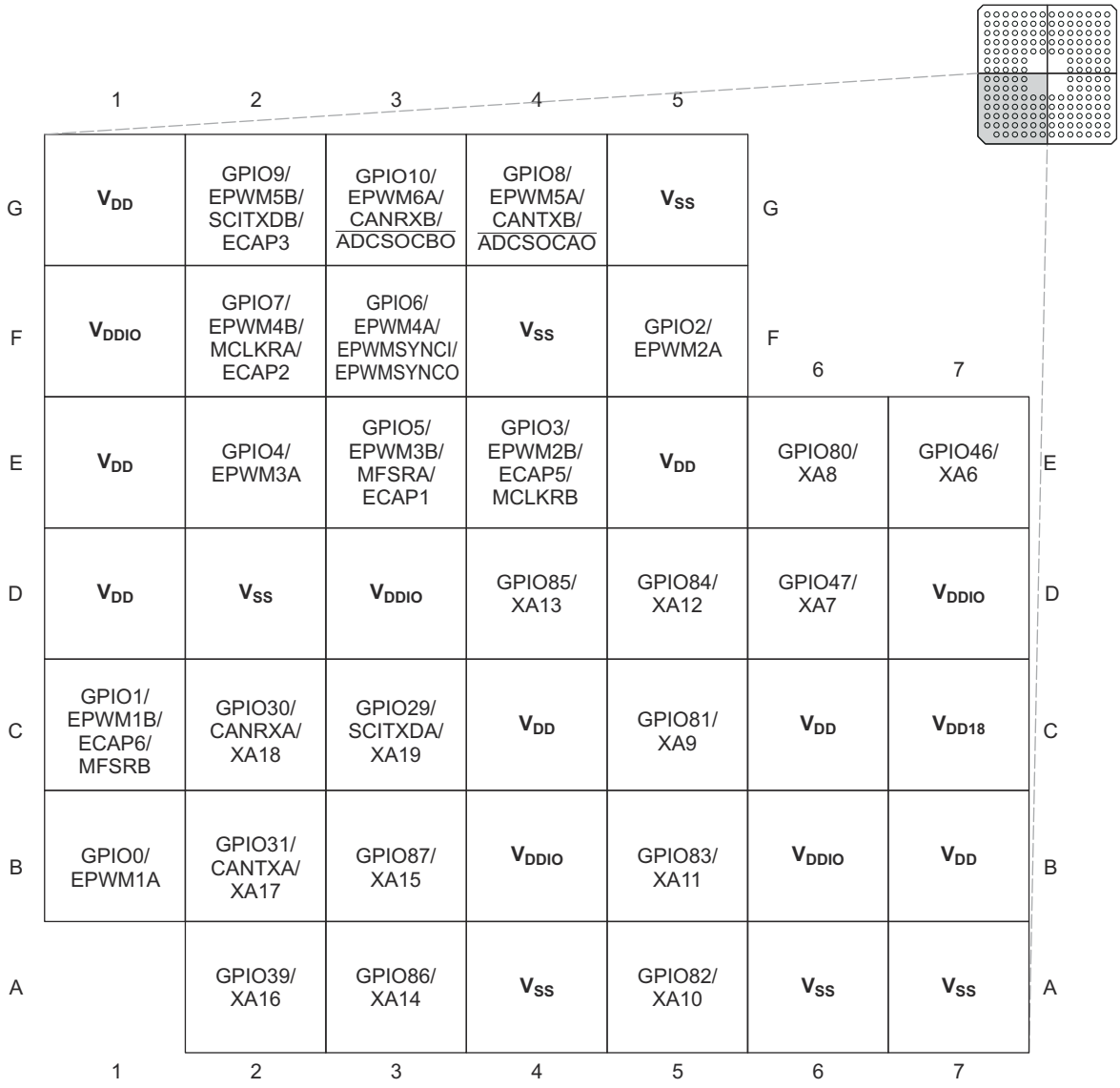

Figure 6-3. C2834x 179-Ball ZHH MicroStar BGA Lower-Left Quadrant (Bottom View)

Copyright © 2021 Texas Instruments Incorporated

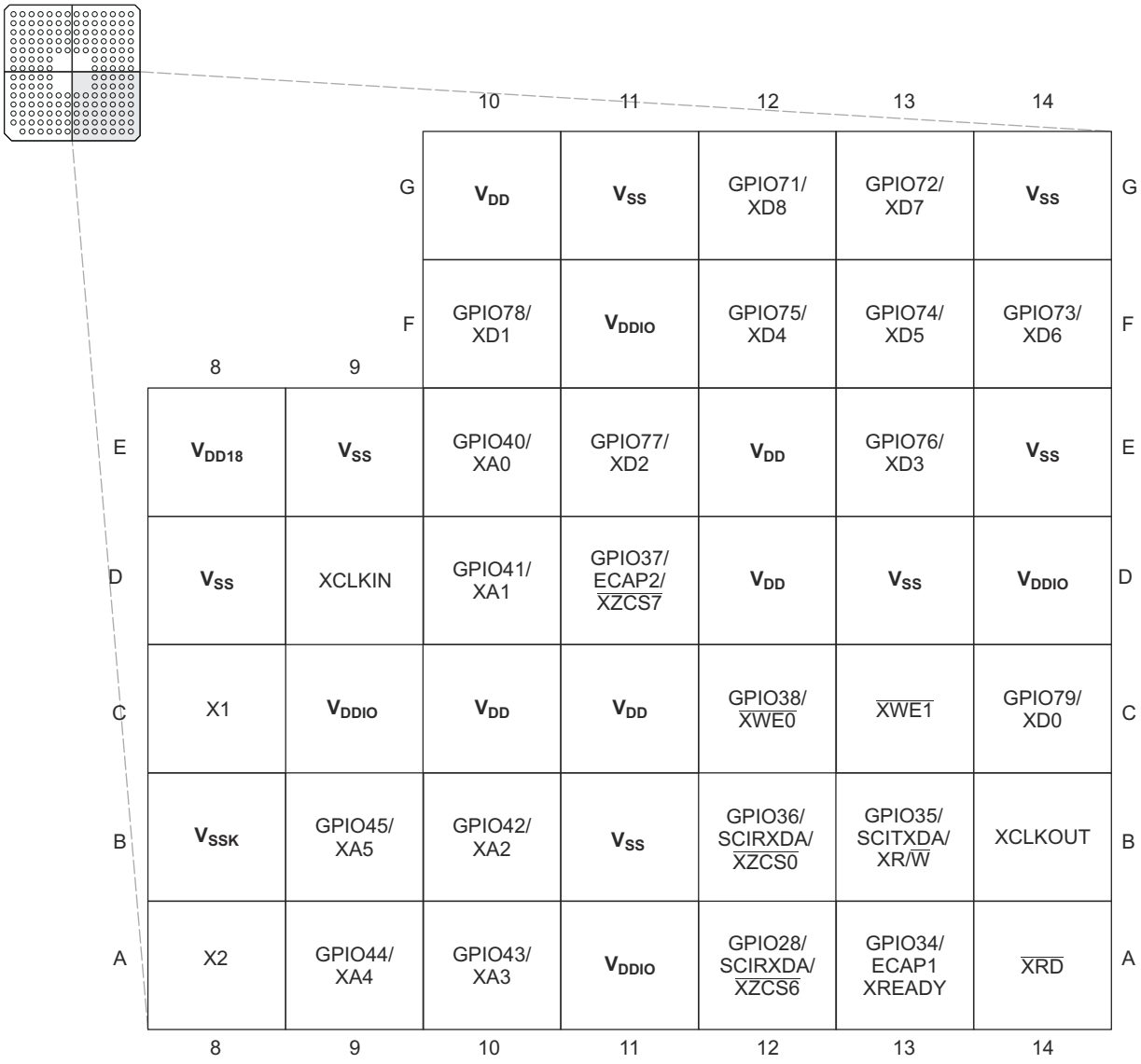

Figure 6-4. C2834x 179-Ball ZHH MicroStar BGA Lower-Right Quadrant (Bottom View)

	1	2	3	4	5	6	7	8
T	V_{SS}	V_{SS}	V_{DDIO}	GPIO19/ SPISTEA/ SCIRXDB/ CANTXA	GPIO21/ EQEP1B/ MDRA/ CANRXB	GPIO24/ ECAP1/ EQEP2A/ MDXB	GPIO27/ ECAP4/ EQEP2S/ MFSXB	TDI
R	V_{SS}	V_{SS}	EXTADCCLK	GPIO20/ EQEP1A/ MDXA/ CANTXB	GPIO22/ EQEP1S/ MCLKXA/ SCITXDB	GPIO25/ ECAP2/ EQEP2B/ MDRB	GPIO32/ SDAA/ EPWMSYNCI/ ADCSOCAO	TRST
P	V_{DD}	EXTSOC3B	V_{SS}	V_{SS}	GPIO23/ EQEP1I/ MFSXA/ SCIRXDB	GPIO26/ ECAP3/ EQEP2I/ MCLKXB	GPIO33/ SCLA/ EPWMSYNCO/ ADCSOCBO	TDO
N	EXTSOC2A	EXTSOC2B	EXTSOC3A	V_{SS}	V_{DDIO}	V_{DDIO}	V_{SS}	V_{DDIO}
M	GPIO18/ SPICLKA/ SCITXDB/ CANRXA	EXTSOC1A	EXTSOC1B	V_{DDIO}	V_{SS}	V_{DD}	V_{DD}	V_{DD}
L	GPIO16/ SPISIMOA/ CANTXB/ TZ5	GPIO17/ SPISOMIA/ CANRXB/ TZ6	V_{DD}	V_{DDIO}	V_{DD}	V_{SS}	V_{SS}	V_{SS}
K	V_{SS}	GPIO15/ TZ4/XHOLDA/ SCIRXDB/ MFSXB	V_{DD}	V_{SS}	V_{DD}	V_{SS}	V_{SS}	V_{SS}
J	V_{DDIO}	GPIO13/ TZ2/ CANRXB/ MDRB	GPIO14/ TZ3/XHOLD/ SCITXDB/ MCLKXB	V_{DDIO}	V_{DD}	V_{SS}	V_{SS}	V_{SS}

Figure 6-5. C2834x 256-Ball ZFE Plastic BGA Upper-Left Quadrant (Bottom View)

Copyright © 2021 Texas Instruments Incorporated

9	10	11	12	13	14	15	16	
$\overline{\text{XRS}}$IO	$\overline{\text{XRS}}$	TCK	GPIO50/ EQEP1A/ XD29/ SPICLKD	GPIO53/ EQEP1I/ XD26	V_{DDIO}	V_{SS}	V_{SS}	T
V_{DDIO}	EMU1	GPIO48/ ECAP5/ XD31/ SPISIMOD	GPIO51/ EQEP1B/ XD28/ $\overline{\text{SPISTED}}$	GPIO54/ SPISIMOA/ XD25/ EQEP3A	GPIO56/ SPICLKA/ XD23/ EQEP3S	V_{SS}	V_{SS}	R
TMS	EMU0	GPIO49/ ECAP6/ XD30/ SPISOMID	GPIO52/ EQEP1S/ XD27	GPIO55/ SPISOMIA/ XD24/ EQEP3B	V_{SS}	GPIO57/ $\overline{\text{SPISTEA}}$/ XD22/ EQEP3I	V_{DD}	P
V_{SS}	V_{SS}	V_{DDIO}	V_{DDIO}	V_{SS}	V_{SS}	GPIO59/ MFSRA/ XD20/ EPWM7B	GPIO58/ MCLKRA/ XD21/ EPWM7A	N
V_{DD}	V_{DD}	V_{DD}	V_{SS}	V_{DDIO}	GPIO62/ SCIRXDC/ XD17/ EPWM9A	GPIO61/ MFSRB/ XD18/ EPWM8B	GPIO60/ MCLKRB/ XD19/ EPWM8A	M
V_{SS}	V_{SS}	V_{SS}	V_{DD}	V_{DDIO}	GPIO65/ XD14	GPIO64/ XD15	GPIO63/ SCITXDC/ XD16/ EPWM9B	L
V_{SS}	V_{SS}	V_{SS}	V_{DD}	V_{SS}	GPIO67/ XD12	GPIO66/ XD13	V_{SS}	K
V_{SS}	V_{SS}	V_{SS}	V_{DD}	V_{DDIO}	GPIO69/ XD10	GPIO68/ XD11	V_{DDIO}	J

Figure 6-6. C2834x 256-Ball ZFE Plastic BGA Upper-Right Quadrant (Bottom View)

Copyright © 2021 Texas Instruments Incorporated

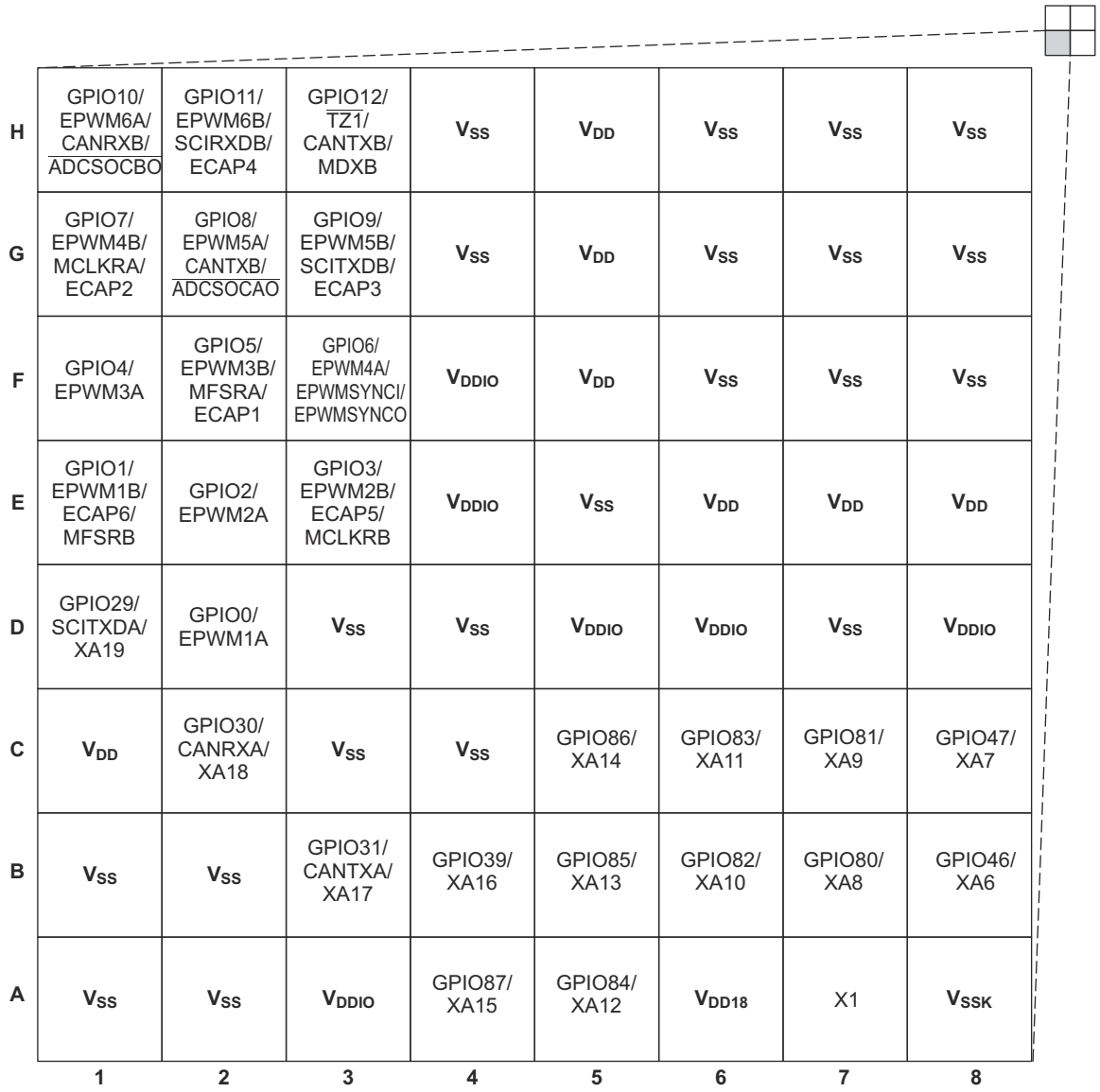

	1	2	3	4	5	6	7	8
H	GPIO10/ EPWM6A/ CANRXB/ ADCSOCBO	GPIO11/ EPWM6B/ SCIRXDB/ ECAP4	GPIO12/ TZ1/ CANTXB/ MDXB	V_{SS}	V_{DD}	V_{SS}	V_{SS}	V_{SS}
G	GPIO7/ EPWM4B/ MCLKRA/ ECAP2	GPIO8/ EPWM5A/ CANTXB/ ADCSOCAO	GPIO9/ EPWM5B/ SCITXDB/ ECAP3	V_{SS}	V_{DD}	V_{SS}	V_{SS}	V_{SS}
F	GPIO4/ EPWM3A	GPIO5/ EPWM3B/ MFSRA/ ECAP1	GPIO6/ EPWM4A/ EPWMSYNCI/ EPWMSYNCO	V_{DDIO}	V_{DD}	V_{SS}	V_{SS}	V_{SS}
E	GPIO1/ EPWM1B/ ECAP6/ MFSRB	GPIO2/ EPWM2A	GPIO3/ EPWM2B/ ECAP5/ MCLKRB	V_{DDIO}	V_{SS}	V_{DD}	V_{DD}	V_{DD}
D	GPIO29/ SCITXDA/ XA19	GPIO0/ EPWM1A	V_{SS}	V_{SS}	V_{DDIO}	V_{DDIO}	V_{SS}	V_{DDIO}
C	V_{DD}	GPIO30/ CANRXA/ XA18	V_{SS}	V_{SS}	GPIO86/ XA14	GPIO83/ XA11	GPIO81/ XA9	GPIO47/ XA7
B	V_{SS}	V_{SS}	GPIO31/ CANTXA/ XA17	GPIO39/ XA16	GPIO85/ XA13	GPIO82/ XA10	GPIO80/ XA8	GPIO46/ XA6
A	V_{SS}	V_{SS}	V_{DDIO}	GPIO87/ XA15	GPIO84/ XA12	V_{DD18}	X1	V_{SSK}

Figure 6-7. C2834x 256-Ball ZFE Plastic BGA Lower-Left Quadrant (Bottom View)

Copyright © 2021 Texas Instruments Incorporated

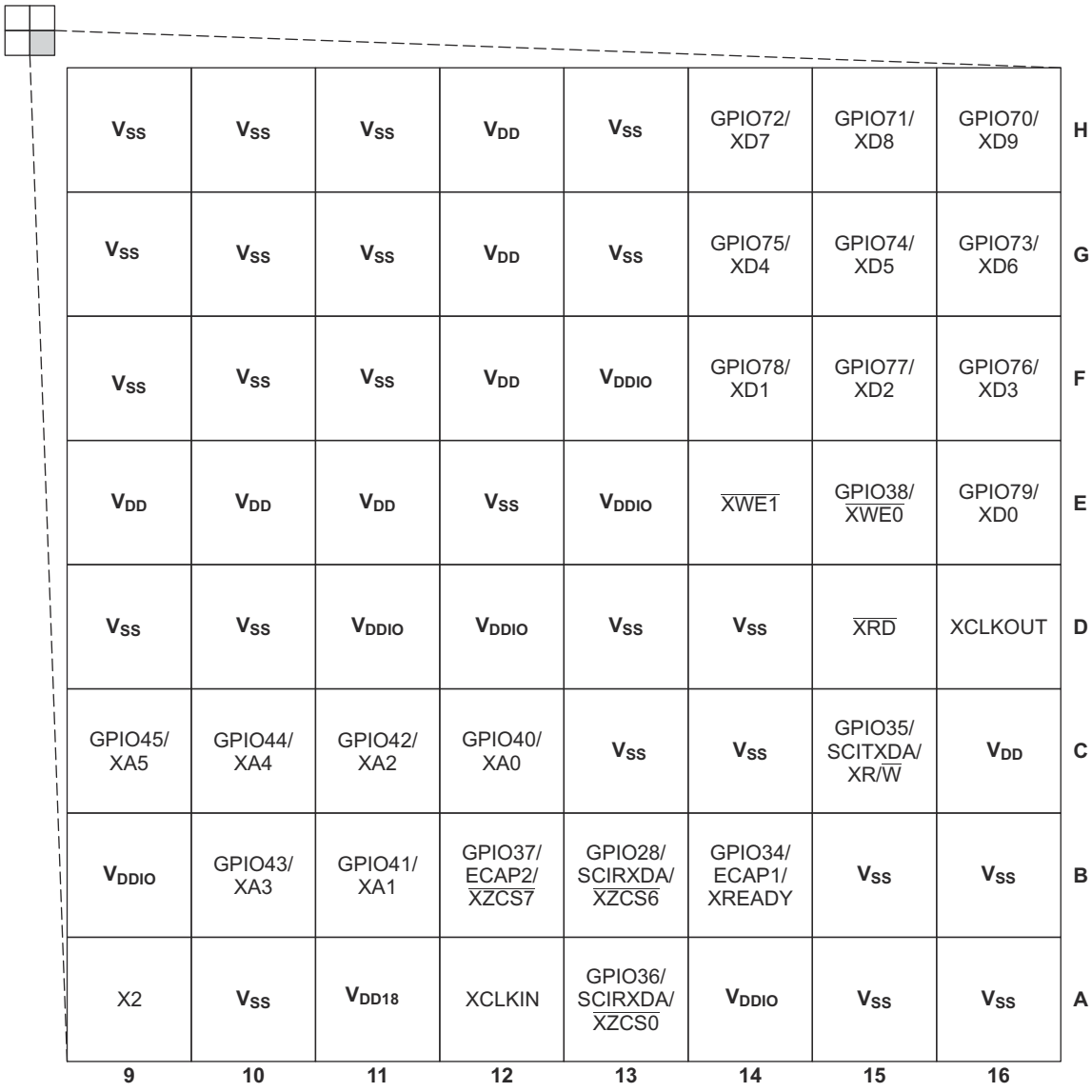

	9	10	11	12	13	14	15	16	
H	V_{SS}	V_{SS}	V_{SS}	V_{DD}	V_{SS}	GPIO72/ XD7	GPIO71/ XD8	GPIO70/ XD9	H
G	V_{SS}	V_{SS}	V_{SS}	V_{DD}	V_{SS}	GPIO75/ XD4	GPIO74/ XD5	GPIO73/ XD6	G
F	V_{SS}	V_{SS}	V_{SS}	V_{DD}	V_{DDIO}	GPIO78/ XD1	GPIO77/ XD2	GPIO76/ XD3	F
E	V_{DD}	V_{DD}	V_{DD}	V_{SS}	V_{DDIO}	$\overline{XWE1}$	GPIO38/ $\overline{XWE0}$	GPIO79/ XD0	E
D	V_{SS}	V_{SS}	V_{DDIO}	V_{DDIO}	V_{SS}	V_{SS}	$\overline{XRD}$	XCLKOUT	D
C	GPIO45/ XA5	GPIO44/ XA4	GPIO42/ XA2	GPIO40/ XA0	V_{SS}	V_{SS}	GPIO35/ SCITXDA/ XR/$\overline{W}$	V_{DD}	C
B	V_{DDIO}	GPIO43/ XA3	GPIO41/ XA1	GPIO37/ ECAP2/ $\overline{XZCS7}$	GPIO28/ SCIRXDA/ $\overline{XZCS6}$	GPIO34/ ECAP1/ XREADY	V_{SS}	V_{SS}	B
A	X2	V_{SS}	V_{DD18}	XCLKIN	GPIO36/ SCIRXDA/ $\overline{XZCS0}$	V_{DDIO}	V_{SS}	V_{SS}	A

Figure 6-8. C2834x 256-Ball ZFE Plastic BGA Lower-Right Quadrant (Bottom View)

Copyright © 2021 Texas Instruments Incorporated

6.2 Signal Descriptions

Table 6-1 describes the signals. The GPIO function (shown in Italics) is the default at reset. The peripheral signals that are listed under them are alternate functions. Some peripheral functions may not be available in all devices. See Table 5-1 for details. Inputs are not 5-V tolerant. All XINTF pins have a drive strength of 4 mA (typical). All GPIO pins are I/O/Z, 4-mA drive typical and have an internal pullup, which can be selectively enabled or disabled on a per-pin basis. This feature only applies to the GPIO pins. The pullups on GPIO0–GPIO11 and GPIO58–GPIO63 pins are not enabled at reset. The pullups on GPIO12–GPIO57 and GPIO64–GPIO87 are enabled upon reset.

Table 6-1. Signal Descriptions

NAME	ZHH BALL #	ZFE BALL #	DESCRIPTION
JTAG			
$\overline{\text{TRST}}$	M7	R8	JTAG test reset with internal pulldown. $\overline{\text{TRST}}$, when driven high, gives the scan system control of the operations of the device. If this signal is not connected or driven low, the device operates in its functional mode, and the test reset signals are ignored. NOTE: $\overline{\text{TRST}}$ is an active high test pin and must be maintained low at all times during normal device operation. An external pulldown resistor is recommended on this pin. The value of this resistor should be based on drive strength of the debugger pods applicable to the design. A 2.2-kΩ resistor generally offers adequate protection. Because this is application-specific, TI recommends validating each target board for proper operation of the debugger and the application. (I, ↓)
TCK	P9	T11	JTAG test clock. An external pullup resistor is required on this pin. A 2.2-kΩ resistor generally offers adequate protection.(I)
TMS	M8	P9	JTAG test-mode select (TMS) with internal pullup. This serial control input is clocked into the TAP controller on the rising edge of TCK. (I, ↑)
TDI	L6	T8	JTAG test data input (TDI) with internal pullup. TDI is clocked into the selected register (instruction or data) on a rising edge of TCK. (I, ↑)
TDO	N7	P8	JTAG scan out, test data output (TDO). The contents of the selected register (instruction or data) are shifted out of TDO on the falling edge of TCK.
EMU0	N9	P10	Emulator pin 0. When $\overline{\text{TRST}}$ is driven high, this pin is used as an interrupt to or from the emulator system and is defined as input/output through the JTAG scan. This pin is also used to put the device into boundary-scan mode. With the EMU0 pin at a logic-high state and the EMU1 pin at a logic-low state, a rising edge on the $\overline{\text{TRST}}$ pin would latch the device into boundary-scan mode. **NOTE:** An external pullup resistor is recommended on this pin. The value of this resistor should be based on the drive strength of the debugger pods applicable to the design. A 2.2-kΩ to 4.7-kΩ resistor is generally adequate. Because this is application-specific, TI recommends validating each each target board for proper operation of the debugger and the application.
EMU1	L9	R10	Emulator pin 1. When $\overline{\text{TRST}}$ is driven high, this pin is used as an interrupt to or from the emulator system and is defined as input/output through the JTAG scan. This pin is also used to put the device into boundary-scan mode. With the EMU0 pin at a logic-high state and the EMU1 pin at a logic-low state, a rising edge on the $\overline{\text{TRST}}$ pin would latch the device into boundary-scan mode. **NOTE:** An external pullup resistor is recommended on this pin. The value of this resistor should be based on the drive strength of the debugger pods applicable to the design. A 2.2-kΩ to 4.7-kΩ resistor is generally adequate. Because this is application-specific, TI recommends validating each target board for proper operation of the debugger and the application.
Clock			
XCLKOUT	B14	D16	Output clock derived from SYSCLKOUT. XCLKOUT is either the same frequency, one-half the frequency, one-fourth the frequency, or one-eighth the frequency of SYSCLKOUT. This is controlled by bit 19 (BY4CLKMODE), bits 18:16 (XTIMCLK), and bit 2 (CLKMODE) in the XINTCNF2 register. At reset, XCLKOUT = SYSCLKOUT/8. The XCLKOUT signal can be turned off by setting XINTCNF2[CLKOFF] to 1. Unlike other GPIO pins, the XCLKOUT pin is not placed in high-impedance state during a reset.
XCLKIN	D9	A12	External Oscillator Input. This pin is to feed a clock from an external 3.3-V oscillator. In this case, the X1 pin must be tied to V_{SSK}. If a crystal/resonator is used (or if an external 1.8-V oscillator is used to feed clock to X1 pin), this pin must be tied to V_{SS}. (I)
X1	C8	A7	Internal/External Oscillator Input. To use the internal oscillator, a quartz crystal may be connected across X1 and X2. The X1 pin is referenced to the 1.8-V core digital power supply. A 1.8-V external oscillator may be connected to the X1 pin. In this case, the XCLKIN pin must be connected to V_{SS}. If a 3.3-V external oscillator is used with the XCLKIN pin, X1 must be tied to V_{SSK}. (I)

Copyright © 2021 Texas Instruments Incorporated

Table 6-1. Signal Descriptions (continued)

NAME	ZHH BALL #	ZFE BALL #	DESCRIPTION
X2	A8	A9	Internal Oscillator Output. A quartz crystal may be connected across X1 and X2. If X2 is not used it must be left unconnected. (O)
Reset			
$\overline{\text{XRS}}$	P8	T10	Device Reset (in) and Watchdog Reset (out). Device reset. $\overline{\text{XRS}}$ causes the device to terminate execution. The PC will point to the address contained at the location 0x3FFFC0. When $\overline{\text{XRS}}$ is brought to a high level, execution begins at the location pointed to by the PC. This pin is driven low by the MCU when a watchdog reset occurs. During watchdog reset, the $\overline{\text{XRS}}$ pin is driven low for the watchdog reset duration of 512 OSCCLK cycles. (I/OD, ↑) The output buffer of this pin is an open drain with an internal pullup. It is recommended that this pin be driven by an open-drain device.
$\overline{\text{XRS}}$IO	N8	T9	$\overline{\text{XRS}}$ I/O Control (I) - This pin must be connected to the $\overline{\text{XRS}}$ pin on the target board. When $\overline{\text{XRS}}$ is low (reset), the level detected on this pin puts all output buffers on the device in high-impedance mode.
External ADC Interface Signals			
EXTSOC1A	N1	M2	External ADC SOC Group 1 A Output. Trigger for external ADC, this signal is logical OR of ePWM1/2/3 SOCA internal signals (O)
EXTSOC1B	M3	M3	External ADC SOC Group 1 B Output. Trigger for external ADC, this signal is logical OR of ePWM1/2/3 SOCB internal signals (O)
EXTSOC2A	M2	N1	External ADC SOC Group 2 A Output. Trigger for external ADC, this signal is logical OR of ePWM4/5/6 SOCA internal signals (O)
EXTSOC2B	P1	N2	External ADC SOC Group 2 B Output. Trigger for external ADC, this signal is logical OR of ePWM4/5/6 SOCB internal signals (O)
EXTSOC3A	N2	N3	External ADC SOC Group 3 A Output. Trigger for external ADC, this signal is logical OR of ePWM7/8/9 SOCA internal signals (O)
EXTSOC3B	P2	P2	External ADC SOC Group3 B Output. Trigger for external ADC, this signal is logical OR of ePWM7/8/9 SOCB internal signals (O)
EXTADCCLK	N3	R3	External ADC Clock Signal. Clock for external ADC support, derived from SYSCLK (O)
GPIO and Peripheral Signals			
GPIO0 EPWM1A - -	B1	D2	General-purpose input/output 0 (I/O/Z) Enhanced PWM1 Output A and HRPWM channel (O) - -
GPIO1 EPWM1B ECAP6 MFSRB	C1	E1	General-purpose input/output 1 (I/O/Z) Enhanced PWM1 Output B (O) Enhanced Capture 6 input/output (I/O) McBSP-B receive frame synch (I/O)
GPIO2 EPWM2A - -	F5	E2	General-purpose input/output 2 (I/O/Z) Enhanced PWM2 Output A and HRPWM channel (O) - -
GPIO3 EPWM2B ECAP5 MCLKRB	E4	E3	General-purpose input/output 3 (I/O/Z) Enhanced PWM2 Output B (O) Enhanced Capture 5 input/output (I/O) McBSP-B receive clock (I/O)
GPIO4 EPWM3A - -	E2	F1	General-purpose input/output 4 (I/O/Z) Enhanced PWM3 output A and HRPWM channel (O) - -
GPIO5 EPWM3B MFSRA ECAP1	E3	F2	General-purpose input/output 5 (I/O/Z) Enhanced PWM3 output B (O) McBSP-A receive frame synch (I/O) Enhanced Capture input/output 1 (I/O)

Copyright © 2021 Texas Instruments Incorporated

Table 6-1. Signal Descriptions (continued)

NAME	ZHH BALL #	ZFE BALL #	DESCRIPTION
GPIO6 EPWM4A EPWMSYNCI EPWMSYNCO	F3	F3	General-purpose input/output 6 (I/O/Z) Enhanced PWM4 output A and HRPWM channel (O) External ePWM sync pulse input (I) External ePWM sync pulse output (O)
GPIO7 EPWM4B MCLKRA ECAP2	F2	G1	General-purpose input/output 7 (I/O/Z) Enhanced PWM4 output B (O) McBSP-A receive clock (I/O) Enhanced capture input/output 2 (I/O)
GPIO8 EPWM5A CANTXB $\overline{\text{ADCSOCAO}}$	G4	G2	General-purpose input/output 8 (I/O/Z) Enhanced PWM5 output A and HRPWM channel (O) Enhanced CAN-B transmit (O) ADC start-of-conversion A (O)
GPIO9 EPWM5B SCITXDB ECAP3	G2	G3	General-purpose input/output 9 (I/O/Z) Enhanced PWM5 output B (O) SCI-B transmit data(O) Enhanced capture input/output 3 (I/O)
GPIO10 EPWM6A CANRXB $\overline{\text{ADCSOCBO}}$	G3	H1	General-purpose input/output 10 (I/O/Z) Enhanced PWM6 output A and HRPWM channel (O) Enhanced CAN-B receive (I) ADC start-of-conversion B (O)
GPIO11 EPWM6B SCIRXDB ECAP4	H3	H2	General-purpose input/output 11 (I/O/Z) Enhanced PWM6 output B (O) SCI-B receive data (I) Enhanced CAP Input/Output 4 (I/O)
GPIO12 $\overline{\text{TZ1}}$ CANTXB MDXB	H2	H3	General-purpose input/output 12 (I/O/Z) Trip Zone input 1 (I) Enhanced CAN-B transmit (O) McBSP-B transmit serial data (O)
GPIO13 $\overline{\text{TZ2}}$ CANRXB MDRB	H4	J2	General-purpose input/output 13 (I/O/Z) Trip Zone input 2 (I) Enhanced CAN-B receive (I) McBSP-B receive serial data (I)
GPIO14	H5	J3	General-purpose input/output 14 (I/O/Z)
$\overline{\text{TZ3}}$/ $\overline{\text{XHOLD}}$			Trip Zone input 3/External Hold Request. $\overline{\text{XHOLD}}$, when active (low), requests the external interface (XINTF) to release the external bus and place all buses and strobes into a high-impedance state. To prevent this from happening when $\overline{\text{TZ3}}$ signal goes active, disable this function by writing XINTCNF2[HOLD] = 1. If this is not done, the XINTF bus will go into high impedance anytime $\overline{\text{TZ3}}$ goes low. On the ePWM side, $\overline{\text{TZn}}$ signals are ignored by default, unless they are enabled by the code. The XINTF will release the bus when any current access is complete and there are no pending accesses on the XINTF. (I)
SCITXDB MCLKXB			SCI-B Transmit (O) McBSP-B transmit clock (I/O)
GPIO15	K2	K2	General-purpose input/output 15 (I/O/Z)
$\overline{\text{TZ4}}$/ $\overline{\text{XHOLDA}}$			Trip Zone input 4/External Hold Acknowledge. The pin function for this option is based on the direction chosen in the GPADIR register. If the pin is configured as an input, then $\overline{\text{TZ4}}$ function is chosen. If the pin is configured as an output, then $\overline{\text{XHOLDA}}$ function is chosen. $\overline{\text{XHOLDA}}$ is driven active (low) when the XINTF has granted an $\overline{\text{XHOLD}}$ request. All XINTF buses and strobe signals will be in a high-impedance state. $\overline{\text{XHOLDA}}$ is released when the $\overline{\text{XHOLD}}$ signal is released. External devices should only drive the external bus when $\overline{\text{XHOLDA}}$ is active (low). (I/O)
SCIRXDB MFSXB			SCI-B receive (I) McBSP-B transmit frame synch (I/O)
GPIO16 SPISIMOA CANTXB $\overline{\text{TZ5}}$	K4	L1	General-purpose input/output 16 (I/O/Z) SPI slave in, master out (I/O) Enhanced CAN-B transmit (O) Trip Zone input 5 (I)

Copyright © 2021 Texas Instruments Incorporated

Table 6-1. Signal Descriptions (continued)

NAME	ZHH BALL #	ZFE BALL #	DESCRIPTION
GPIO17 SPISOMIA CANRXB $\overline{\text{TZ6}}$	J5	L2	General-purpose input/output 17 (I/O/Z) SPI-A slave out, master in (I/O) Enhanced CAN-B receive (I) Trip zone input 6 (I)
GPIO18 SPICLKA SCITXDB CANRXA	L1	M1	General-purpose input/output 18 (I/O/Z) SPI-A clock input/output (I/O) SCI-B transmit (O) Enhanced CAN-A receive (I)
GPIO19 $\overline{\text{SPISTEA}}$ SCIRXDB CANTXA	P3	T4	General-purpose input/output 19 (I/O/Z) SPI-A slave transmit enable input/output (I/O) SCI-B receive (I) Enhanced CAN-A transmit (O)
GPIO20 EQEP1A MDXA CANTXB	L4	R4	General-purpose input/output 20 (I/O/Z) Enhanced QEP1 input A (I) McBSP-A transmit serial data (O) Enhanced CAN-B transmit (O)
GPIO21 EQEP1B MDRA CANRXB	M4	T5	General-purpose input/output 21 (I/O/Z) Enhanced QEP1 input B (I) McBSP-A receive serial data (I) Enhanced CAN-B receive (I)
GPIO22 EQEP1S MCLKXA SCITXDB	N4	R5	General-purpose input/output 22 (I/O/Z) Enhanced QEP1 strobe (I/O) McBSP-A transmit clock (I/O) SCI-B transmit (O)
GPIO23 EQEP1I MFSXA SCIRXDB	P4	P5	General-purpose input/output 23 (I/O/Z) Enhanced QEP1 index (I/O) McBSP-A transmit frame synch (I/O) SCI-B receive (I)
GPIO24 ECAP1 EQEP2A MDXB	P5	T6	General-purpose input/output 24 (I/O/Z) Enhanced capture 1 (I/O) Enhanced QEP2 input A (I) McBSP-B transmit serial data (O)
GPIO25 ECAP2 EQEP2B MDRB	M5	R6	General-purpose input/output 25 (I/O/Z) Enhanced capture 2 (I/O) Enhanced QEP2 input B (I) McBSP-B receive serial data (I)
GPIO26 ECAP3 EQEP2I MCLKXB	K6	P6	General-purpose input/output 26 (I/O/Z) Enhanced capture 3 (I/O) Enhanced QEP2 index (I/O) McBSP-B transmit clock (I/O)
GPIO27 ECAP4 EQEP2S MFSXB	M6	T7	General-purpose input/output 27 (I/O/Z) Enhanced capture 4 (I/O) Enhanced QEP2 strobe (I/O) McBSP-B transmit frame synch (I/O)
GPIO28 SCIRXDA $\overline{\text{XZCS6}}$	A12	B13	General-purpose input/output 28 (I/O/Z) SCI receive data (I) External Interface zone 6 chip select (O)
GPIO29 SCITXDA XA19	C3	D1	General-purpose input/output 29. (I/O/Z) SCI transmit data (O) External Interface Address Line 19 (O)
GPIO30 CANRXA XA18	C2	C2	General-purpose input/output 30 (I/O/Z) Enhanced CAN-A receive (I) External Interface Address Line 18 (O)
GPIO31 CANTXA XA17	B2	B3	General-purpose input/output 31 (I/O/Z) Enhanced CAN-A transmit (O) External Interface Address Line 17 (O)

Copyright © 2021 Texas Instruments Incorporated

Table 6-1. Signal Descriptions (continued)

NAME	ZHH BALL #	ZFE BALL #	DESCRIPTION
GPIO32 SDAA EPWMSYNCI ADCSOCAO	P6	R7	General-purpose input/output 32 (I/O/Z) I2C data open-drain bidirectional port (I/OD) Enhanced PWM external sync pulse input (I) ADC start-of-conversion A (O)
GPIO33 SCLA EPWMSYNCO ADCSOCBO	N6	P7	General-purpose input/output 33 (I/O/Z) I2C clock open-drain bidirectional port (I/OD) Enhanced PWM external synch pulse output (O) ADC start-of-conversion B (O)
GPIO34 ECAP1 XREADY	A13	B14	General-purpose input/output 34 (I/O/Z) Enhanced Capture input/output 1 (I/O) External Interface Ready signal
GPIO35 SCITXDA XR/ $\overline{W}$	B13	C15	General-purpose input/output 35 (I/O/Z) SCI-A transmit data (O) External Interface read, not write strobe
GPIO36 SCIRXDA XZCS0	B12	A13	General-purpose input/output 36 (I/O/Z) SCI-A receive data (I) External Interface zone 0 chip select (O)
GPIO37 ECAP2 XZCS7	D11	B12	General-purpose input/output 37 (I/O/Z) Enhanced Capture input/output 2 (I/O) External Interface zone 7 chip select (O)
GPIO38 - XWE0	C12	E15	General-purpose input/output 38 (I/O/Z) - External Interface Write Enable 0 (O). XWE0 defaults back to GPIO38 upon reset, during which time it will be high-impedance.
GPIO39 - XA16	A2	B4	General-purpose input/output 39 (I/O/Z) - External Interface Address Line 16 (O)
GPIO40 - XA0	E10	C12	General-purpose input/output 40 (I/O/Z) - External Interface Address Line 0
GPIO41 - XA1	D10	B11	General-purpose input/output 41 (I/O/Z) - External Interface Address Line 1 (O)
GPIO42 - XA2	B10	C11	General-purpose input/output 42 (I/O/Z) - External Interface Address Line 2 (O)
GPIO43 - XA3	A10	B10	General-purpose input/output 43 (I/O/Z) - External Interface Address Line 3 (O)
GPIO44 - XA4	A9	C10	General-purpose input/output 44 (I/O/Z) - External Interface Address Line 4 (O)
GPIO45 - XA5	B9	C9	General-purpose input/output 45 (I/O/Z) - External Interface Address Line 5 (O)
GPIO46 - XA6	E7	B8	General-purpose input/output 46 (I/O/Z) - External Interface Address Line 6 (O)
GPIO47 - XA7	D6	C8	General-purpose input/output 47 (I/O/Z) - External Interface Address Line 7 (O)
GPIO48 ECAP5 XD31 SPISIMOD	M10	R11	General-purpose input/output 48 (I/O/Z) Enhanced Capture input/output 5 (I/O) External Interface Data Line 31 (O) SPI-D slave in, master out (I/O)

Copyright © 2021 Texas Instruments Incorporated

Table 6-1. Signal Descriptions (continued)

NAME	ZHH BALL #	ZFE BALL #	DESCRIPTION
GPIO49 ECAP6 XD30 SPISOMID	P10	P11	General-purpose input/output 49 (I/O/Z) Enhanced Capture input/output 6 (I/O) External Interface Data Line 30 (O) SPI-D slave out, master in (I/O)
GPIO50 EQEP1A XD29 SPICLKD	N10	T12	General-purpose input/output 50 (I/O/Z) Enhanced QEP 1input A (I) External Interface Data Line 29 (O) SPI-D Clock input/output (I/O)
GPIO51 EQEP1B XD28 $\overline{\text{SPISTED}}$	N11	R12	General-purpose input/output 51 (I/O/Z) Enhanced QEP 1input B (I) External Interface Data Line 28 (O) SPI-D slave transmit enable input/output (I/O)
GPIO52 EQEP1S XD27	M11	P12	General-purpose input/output 52 (I/O/Z) Enhanced QEP 1Strobe (I/O) External Interface Data Line 27 (O)
GPIO53 EQEP1I XD26	L11	T13	General-purpose input/output 53 (I/O/Z) Enhanced QEP1 Index (I/O) External Interface Data Line 26 (O)
GPIO54 SPISIMOA XD25 EQEP3A	P12	R13	General-purpose input/output 54 (I/O/Z) SPI-A slave in, master out (I/O) External Interface Data Line 25 (O) Enhanced QEP3 input A (I)
GPIO55 SPISOMIA XD24 EQEP3B	N12	P13	General-purpose input/output 55 (I/O/Z) SPI-A slave out, master in (I/O) External Interface Data Line 24 (O) Enhanced QEP3 input B (I)
GPIO56 SPICLKA XD23 EQEP3S	P13	R14	General-purpose input/output 56 (I/O/Z) SPI-A clock (I/O) External Interface Data Line 23 (O) Enhanced QEP3 strobe (I/O)
GPIO57 $\overline{\text{SPISTEA}}$ XD22 EQEP3I	N13	P15	General-purpose input/output 57 (I/O/Z) SPI-A slave transmit enable (I/O) External Interface Data Line 22 (O) Enhanced QEP3 index (I/O)
GPIO58 MCLKRA XD21 EPWM7A	P14	N16	General-purpose input/output 58 (I/O/Z) McBSP-A receive clock (I/O) External Interface Data Line 21 (O) Enhanced PWM 7 output A and HRPWM channel (O)
GPIO59 MFSRA XD20 EPWM7B	M13	N15	General-purpose input/output 59 (I/O/Z) McBSP-A receive frame synch (I/O) External Interface Data Line 20 (O) Enhanced PWM 7 output B (O)
GPIO60 MCLKRB XD19 EPWM8A	M14	M16	General-purpose input/output 60 (I/O/Z) McBSP-B receive clock (I/O) External Interface Data Line 19 (O) Enhanced PWM 8 output A and HRPWM channel (O)
GPIO61 MFSRB XD18 EPWM8B	L12	M15	General-purpose input/output 61 (I/O/Z) McBSP-B receive frame synch (I/O) External Interface Data Line 18 (O) Enhanced PWM8 output B (O)
GPIO62 SCIRXDC XD17 EPWM9A	L13	M14	General-purpose input/output 62 (I/O/Z) SCI-C receive data (I) External Interface Data Line 17 (O) Enhanced PWM9 output A and HRPWM channel (O)
GPIO63 SCITXDC XD16 EPWM9B	K13	L16	General-purpose input/output 63 (I/O/Z) SCI-C transmit data (O) External Interface Data Line 16 (O) Enhanced PWM9 output B (O)

Copyright © 2021 Texas Instruments Incorporated

Table 6-1. Signal Descriptions (continued)

NAME	ZHH BALL #	ZFE BALL #	DESCRIPTION
GPIO64 - XD15	K12	L15	General-purpose input/output 64 (I/O/Z) - External Interface Data Line 15 (O)
GPIO65 - XD14	K14	L14	General-purpose input/output 65 (I/O/Z) - External Interface Data Line 14 (O)
GPIO66 - XD13	J11	K15	General-purpose input/output 66 (I/O/Z) - External Interface Data Line 13 (O)
GPIO67 - XD12	J12	K14	General-purpose input/output 67 (I/O/Z) - External Interface Data Line 12 (O)
GPIO68 - XD11	J13	J15	General-purpose input/output 68 (I/O/Z) - External Interface Data Line 11 (O)
GPIO69 - XD10	H13	J14	General-purpose input/output 69 (I/O/Z) - External Interface Data Line 10 (O)
GPIO70 - XD9	H12	H16	General-purpose input/output 70 (I/O/Z) - External Interface Data Line 9 (O)
GPIO71 - XD8	G12	H15	General-purpose input/output 71 (I/O/Z) - External Interface Data Line 8 (O)
GPIO72 - XD7	G13	H14	General-purpose input/output 72 (I/O/Z) - External Interface Data Line 7 (O)
GPIO73 - XD6	F14	G16	General-purpose input/output 73 (I/O/Z) - External Interface Data Line 6 (O)
GPIO74 - XD5	F13	G15	General-purpose input/output 74 (I/O/Z) - External Interface Data Line 5 (O)
GPIO75 - XD4	F12	G14	General-purpose input/output 75 (I/O/Z) - External Interface Data Line 4 (O)
GPIO76 - XD3	E13	F16	General-purpose input/output 76 (I/O/Z) - External Interface Data Line 3 (O)
GPIO77 - XD2	E11	F15	General-purpose input/output 77 (I/O/Z) - External Interface Data Line 2 (O)
GPIO78 - XD1	F10	F14	General-purpose input/output 78 (I/O/Z) - External Interface Data Line 1 (O)
GPIO79 - XD0	C14	E16	General-purpose input/output 79 (I/O/Z) - External Interface Data Line 0 (O)
GPIO80 - XA8	E6	B7	General-purpose input/output 80 (I/O/Z) - External Interface Address Line 8 (O)
GPIO81 - XA9	C5	C7	General-purpose input/output 81 (I/O/Z) - External Interface Address Line 9 (O)
GPIO82 - XA10	A5	B6	General-purpose input/output 82 (I/O/Z) - External Interface Address Line 10 (O)

Copyright © 2021 Texas Instruments Incorporated

Table 6-1. Signal Descriptions (continued)

NAME	ZHH BALL #	ZFE BALL #	DESCRIPTION
GPIO83 - XA11	B5	C6	General-purpose input/output 83 (I/O/Z) - External Interface Address Line 11 (O)
GPIO84 - XA12	D5	A5	General-purpose input/output 84 (I/O/Z) - External Interface Address Line 12 (O)
GPIO85 - XA13	D4	B5	General-purpose input/output 85 (I/O/Z) - External Interface Address Line 13 (O)
GPIO86 - XA14	A3	C5	General-purpose input/output 86 (I/O/Z) - External Interface Address Line 14 (O)
GPIO87 - XA15	B3	A4	General-purpose input/output 87 (I/O/Z) - External Interface Address Line 15 (O)
$\overline{\text{XRD}}$	A14	D15	External Interface Read Enable (O). The $\overline{\text{XRD}}$ pin is high-impedance on reset. It stays that way as long as the XINTF clock is turned off (which happens on reset).
$\overline{\text{XWE1}}$	C13	E14	External Memory Interface Write Enable for Upper 16-bits (O). The $\overline{\text{XWE1}}$ pin is high-impedance on reset. It stays that way as long as the XINTF clock is turned off (which happens on reset).
CPU and I/O Power Pins			
V_{DD18}	E8	A6	Oscillator and PLL Power Pin (1.8 V)
V_{DD18}	C7	A11	
V_{SSK}	B8	A8	Oscillator Kelvin Reference Ground. This pin should not be connected to Vss. See Figure 8-29 through Figure 8-31 for proper application board connections.

Copyright © 2021 Texas Instruments Incorporated

Table 6-1. Signal Descriptions (continued)

NAME	ZHH BALL #	ZFE BALL #	DESCRIPTION
V_{DD}	D1	C1	CPU and logic digital power pins (1.1 V/1.2 V)
V_{DD}	E1	C16	
V_{DD}	G1	E6	
V_{DD}	K3	E7	
V_{DD}	M1	E8	
V_{DD}	N5	E9	
V_{DD}	P7	E10	
V_{DD}	J3	E11	
V_{DD}	J4	F5	
V_{DD}	K9	F12	
V_{DD}	L10	G5	
V_{DD}	N14	G12	
V_{DD}	K11	H5	
V_{DD}	H11	H12	
V_{DD}	H14	J5	
V_{DD}	G10	J12	
V_{DD}	E12	K3	
V_{DD}	D12	K5	
V_{DD}	C11	K12	
V_{DD}	C10	L3	
V_{DD}	B7	L5	
V_{DD}	C6	L12	
V_{DD}	E5	M6	
V_{DD}	C4	M7	
V_{DD}		M8	
V_{DD}		M9	
V_{DD}		M10	
V_{DD}		M11	
V_{DD}		P1	
V_{DD}		P16	
V_{DDIO}	D3	A3	Digital I/O power pins (3.3 V)
V_{DDIO}	F1	A14	
V_{DDIO}	J1	B9	
V_{DDIO}	L2	D5	
V_{DDIO}	K5	D6	
V_{DDIO}	K7	D8	
V_{DDIO}	K8	D11	
V_{DDIO}	P11	D12	
V_{DDIO}	L14	E4	

Copyright © 2021 Texas Instruments Incorporated

Table 6-1. Signal Descriptions (continued)

NAME	ZHH BALL #	ZFE BALL #	DESCRIPTION
V_{DDIO}	J14	E13	Digital I/O power pins
V_{DDIO}	F11	F4	
V_{DDIO}	D14	F13	
V_{DDIO}	A11	J1	
V_{DDIO}	C9	J4	
V_{DDIO}	D7	J13	
V_{DDIO}	B6	J16	
V_{DDIO}	B4	L4	
V_{DDIO}		L13	
V_{DDIO}		M4	
V_{DDIO}		M13	
V_{DDIO}		N5	
V_{DDIO}		N6	
V_{DDIO}		N8	
V_{DDIO}		N11	
V_{DDIO}		N12	
V_{DDIO}		R9	
V_{DDIO}		T3	
V_{DDIO}		T14	

Copyright © 2021 Texas Instruments Incorporated

Table 6-1. Signal Descriptions (continued)

NAME	ZHH BALL #	ZFE BALL #	DESCRIPTION
V_{SS}	D2	A1	Digital ground pins
V_{SS}	F4	A2	
V_{SS}	G5	A10	
V_{SS}	H1	A15	
V_{SS}	J2	A16	
V_{SS}	K1	B1	
V_{SS}	L3	B2	
V_{SS}	L5	B15	
V_{SS}	L7	B16	
V_{SS}	L8	C3	
V_{SS}	M9	C4	
V_{SS}	K10	C13	
V_{SS}	M12	C14	
V_{SS}	J10	D3	
V_{SS}	H10	D4	
V_{SS}	G14	D7	
V_{SS}	G11	D9	
V_{SS}	E14	D10	
V_{SS}	D13	D13	
V_{SS}	B11	D14	
V_{SS}	E9	E5	
V_{SS}	D8	E12	
V_{SS}	A7	F6	
V_{SS}	A6	F7	
V_{SS}	A4	F8	
V_{SS}		F9	
V_{SS}		F10	

Copyright © 2021 Texas Instruments Incorporated

Table 6-1. Signal Descriptions (continued)

NAME	ZHH BALL #	ZFE BALL #	DESCRIPTION
V_{SS}		F11	Digital ground pins
V_{SS}		G4	
V_{SS}		G6	
V_{SS}		G7	
V_{SS}		G8	
V_{SS}		G9	
V_{SS}		G10	
V_{SS}		G11	
V_{SS}		G13	
V_{SS}		H4	
V_{SS}		H6	
V_{SS}		H7	
V_{SS}		H8	
V_{SS}		H9	
V_{SS}		H10	
V_{SS}		H11	
V_{SS}		H13	
V_{SS}		J6	
V_{SS}		J7	
V_{SS}		J8	
V_{SS}		J9	
V_{SS}		J10	
V_{SS}		J11	
V_{SS}		K1	
V_{SS}		K4	
V_{SS}		K6	
V_{SS}		K7	
V_{SS}		K8	
V_{SS}		K9	
V_{SS}		K10	
V_{SS}		K11	
V_{SS}		K13	
V_{SS}		K16	
V_{SS}		L6	
V_{SS}		L7	
V_{SS}		L8	
V_{SS}		L9	
V_{SS}		L10	
V_{SS}		L11	
V_{SS}		M5	
V_{SS}		M12	
V_{SS}		N4	
V_{SS}		N7	
V_{SS}		N9	
V_{SS}		N10	
V_{SS}		N13	

Copyright © 2021 Texas Instruments Incorporated

Table 6-1. Signal Descriptions (continued)

NAME	ZHH BALL #	ZFE BALL #	DESCRIPTION
V_{SS}		N14	Digital ground pins
V_{SS}		P3	
V_{SS}		P4	
V_{SS}		P14	
V_{SS}		R1	
V_{SS}		R2	
V_{SS}		R15	
V_{SS}		R16	
V_{SS}		T1	
V_{SS}		T2	
V_{SS}		T15	
V_{SS}		T16	

Copyright © 2021 Texas Instruments Incorporated

7 Specifications

This section provides the absolute maximum ratings and the recommended operating conditions.

7.1 Absolute Maximum Ratings (1) (2)

		MIN	MAX	UNIT
Supply voltage	V_{DDIO} with respect to V_{SS}	–0.3	4	V
	V_{DD} with respect to V_{SS}	–0.3	1.5	
	V_{DD18} with respect to V_{SS}	–0.3	2.4	
Input voltage	V_{IN} (3.3 V)	–0.3	4	V
	V_{IN} (1.8 V)	–0.3	2.4	
Output voltage	V_O	–0.3	4	V
Input clamp current	I_{IK} (V_{IN} < 0 or V_{IN} > V_{DDIO})(3)	–20	20	mA
Output clamp current	I_{OK} (V_O < 0 or V_O > V_{DDIO})	–20	20	mA
Junction temperature	T_J (4)	–40	150	°C
Storage temperature	T_{stg} (4)	–65	150	°C

(1) Stresses beyond those listed under *Absolute Maximum Ratings* may cause permanent damage to the device. These are stress ratings only, and functional operation of the device at these or any other conditions beyond those indicated under Section 7.4 is not implied. Exposure to absolute-maximum-rated conditions for extended periods may affect device reliability.
(2) All voltage values are with respect to V_{SS}, unless otherwise noted.
(3) Continuous clamp current per pin is ±2 mA.
(4) One or both of the following conditions may result in a reduction of overall device life:
- long-term high-temperature storage
- extended use at maximum temperature

For additional information, see *Semiconductor and IC Package Thermal Metrics*.

7.2 ESD Ratings – Automotive

			VALUE	UNIT
TMS320C2834x in ZFE Package				
$V_{(ESD)}$ Electrostatic discharge	Human body model (HBM), per AEC Q100-002(1)		±2000	V
	Charged-device model (CDM), per AEC Q100-011	All pins	±500	
		Corner pins on 256-ball ZFE: A1, A16, T1, T16	±750	

(1) AEC Q100-002 indicates HBM stressing is done in accordance wit hthe ANSI/ESDA/JEDEC JS-001 specification.

7.3 ESD Ratings – Commercial

		VALUE	UNIT
TMS320C2834x in ZHH Package			
$V_{(ESD)}$ Electrostatic discharge	Human-body model (HBM), per ANSI/ESDA/JEDEC JS-001(1)	±2000	V
	Charged-device model (CDM), per JEDEC specification JESD22-C101(2)	±500	

(1) JEDEC document JEP155 states that 500-V HBM allows safe manufacturing with a standard ESD control process.
(2) JEDEC document JEP157 states that 250-V CDM allows safe manufacturing with a standard ESD control process.

Copyright © 2021 Texas Instruments Incorporated

7.4 Recommended Operating Conditions

		MIN	NOM	MAX	UNIT
Device supply voltage, I/O, V_{DDIO}		3.14	3.3	3.46	V
Device supply voltage CPU, V_{DD}	300-MHz devices	1.14	1.2	1.26	V
	200-MHz devices	1.05	1.1	1.16	
Supply ground, V_{SS}, V_{SSIO}			0		V
Oscillator supply ground, V_{SSK}			0		V
PLL/oscillator supply, V_{DD18}		1.71	1.8	1.89	V
Device clock frequency (system clock), $f_{SYSCLKOUT}$	C28346/C28344/C28342 (V_{DD} = 1.2 V ± 5%)	2		300	MHz
	C28345/C28343/C28341 (V_{DD} = 1.1 V ± 5%)	2		200	
High-level input voltage, V_{IH} (3.3 V)		2		V_{DDIO} + 0.3	V
High-level input voltage, V_{IH} (1.8 V)		0.7 * V_{DD18}			V
Low-level input voltage, V_{IL} (3.3 V)		V_{SS} – 0.3		0.8	V
Low-level input voltage, V_{IL} (1.8 V)				0.3 * V_{DD18}	V
High-level output source current, V_{OH} = 2.4 V, I_{OH}	All I/Os			–4	mA
Low-level output sink current, V_{OL} = V_{OL} MAX, I_{OL}	All I/Os			4	mA
Junction temperature, T_J (1)	T version	–40		105	°C
	S version	–40		125	
	Q version (AEC Q100 Qualification)	–40		125	

(1) T_A (Ambient temperature) is product- and application-dependent and can go up to the specified T_J maximum of the device. See Section 7.8, Thermal Design Considerations.

Copyright © 2021 Texas Instruments Incorporated

7.5 Power Consumption Summary

7.5.1 TMS320C28346/C28344 (1) Current Consumption by Power-Supply Pins at 300-MHz SYSCLKOUT

MODE	TEST CONDITIONS	I_{DD}			I_{DDIO} (2)			I_{DD18}		
		25°C	105°C	125°C	25°C	105°C	125°C	25°C	105°C	125°C
Typical Operational	The following peripheral clocks are enabled: • ePWM1, ePWM2, ePWM3, ePWM4, ePWM5, ePWM6, ePWM7, ePWM8, ePWM9 • eCAP1, eCAP2, eCAP3 • eQEP1, eQEP2, eQEP3 • eCAN-A • SCI-A, SCI-B (FIFO mode) • SPI-A (FIFO mode) • McBSP-A • I2C • XINTF • DMA • CPU-Timer 0, CPU-Timer 1, CPU-Timer 2 All PWM pins are toggled at 300 kHz. All I/O pins are left unconnected. XCLKOUT is turned off. Pullups on output pins and XINTF pins are disabled.(3)	335 mA	555 mA	740 mA	75 mA	75 mA	80 mA	50 mA	47 mA	45 mA
IDLE	XCLKOUT is turned off. Peripheral clocks are off.	205 mA	425 mA	610 mA	15 mA	15 mA	18 mA	50 mA	47 mA	45 mA
STANDBY	Peripheral clocks are off.	140 mA	360 mA	545 mA	15 mA	15 mA	18 mA	50 mA	47 mA	45 mA
HALT	Peripheral clocks are off. Input clock is disabled.(4)	135 mA	355 mA	540 mA	15 mA	15 mA	18 mA	550 µA	550 µA	550 µA

(1) The I_{DD} numbers in this table are valid for the TMS320C28346 and TMS320C28344 devices only. For the TMS320C28342 device, subtract the I_{DD} current numbers for those peripherals that do not exist on this device (see Table 7-1) from the I_{DD} current numbers shown in this table.

(2) I_{DDIO} current is dependent on the electrical loading on the I/O pins.

(3) The following is done in a loop:
- Data is continuously transmitted out of the SCI-A, SCI-B, SPI-A, McBSP-A, and eCAN-A ports.
- Floating-point multiplication and addition are performed.
- 32-bit read/write of the XINTF is performed.
- DMA channels 1 and 2 transfer data from SARAM to SARAM.
- GPIO19 is toggled.

(4) If a quartz crystal or ceramic resonator is used as the clock source, the HALT mode shuts down the internal oscillator.

Note

The I_{DD} numbers in Section 7.5.1 are valid for the TMS320C28346 and TMS320C28344 devices only. For the TMS320C28342 device, subtract the I_{DD} current numbers for those peripherals that do not exist on this device (see Table 7-1) from the I_{DD} current numbers shown in Section 7.5.1.

Note

The peripheral - I/O multiplexing implemented in the device prevents all available peripherals from being used at the same time. This is because more than one peripheral function may share an I/O pin. It is, however, possible to turn on the clocks to all the peripherals at the same time, although such a configuration is not useful. If this is done, the current drawn by the device will be more than the numbers specified in the current consumption tables.

Copyright © 2021 Texas Instruments Incorporated

7.5.2 TMS320C28345/C28343 (1) Current Consumption by Power-Supply Pins at 200-MHz SYSCLKOUT

MODE	TEST CONDITIONS	I_{DD}			I_{DDIO} (2)			I_{DD18}		
		25°C	105°C	125°C	25°C	105°C	125°C	25°C	105°C	125°C
Typical operation	The following peripheral clocks are enabled: • ePWM1, ePWM2, ePWM3, ePWM4, ePWM5, ePWM6, ePWM7, ePWM8, ePWM9 • eCAP1, eCAP2, eCAP3 • eQEP1, eQEP2, eQEP3 • eCAN-A • SCI-A, SCI-B (FIFO mode) • SPI-A (FIFO mode) • McBSP-A • I2C • XINTF • DMA • CPU-TImers 0, CPU-Timer 1, CPU-Timer 2 All PWM pins are toggled at 200 kHz. All I/O pins are left unconnected. XCLKOUT is turned off. Pullups on output pins and XINTF pins are disabled.(3)	200 mA	380 mA	500 mA	45 mA	45 mA	45 mA	45 mA	43 mA	40 mA
IDLE	Peripheral clocks are off. XCLKOUT is turned off.	95 mA	275 mA	395 mA	15 mA	15 mA	18 mA	45 mA	43 mA	40 mA
STANDBY	Peripheral clocks are off.	45 mA	225 mA	345 mA	15 mA	15 mA	18 mA	45 mA	43 mA	40 mA
HALT	Peripheral clocks are off. Input clock is disabled.(4)	40 mA	220 mA	340 mA	15 mA	15 mA	18 mA	550 µA	550 µA	550 µA

(1) The I_{DD} numbers in this table are valid for the TMS320C28345 and TMS320C28343 devices only. For the TMS320C28341 device, subtract the I_{DD} current numbers for those peripherals that do not exist on this device (see Table 7-1) from the I_{DD} current numbers shown in this table.

(2) I_{DDIO} current is dependent on the electrical loading on the I/O pins.

(3) The following is done in a loop:
- Data is continuously transmitted out of the SCI-A, SCI-B, SPI-A, McBSP-A, and eCAN-A ports.
- Floating-point multiplication and addition are performed.
- 32-bit read/write of the XINTF is performed.
- DMA channels 1 and 2 transfer data from SARAM to SARAM.
- GPIO19 is toggled.

(4) If a quartz crystal or ceramic resonator is used as the clock source, the HALT mode shuts down the internal oscillator.

Note

The I_{DD} numbers in Section 7.5.2 are valid for the TMS320C28345 and TMS320C28343 devices only. For the TMS320C28341 device, subtract the I_{DD} current numbers for those peripherals that do not exist on this device (see Table 7-1) from the I_{DD} current numbers shown in Section 7.5.2.

Copyright © 2021 Texas Instruments Incorporated

7.5.3 Reducing Current Consumption

Methods of reducing current consumption include the following:

- Turn off the clock to any peripheral module that is not used in a given application because each peripheral unit has an individual clock-enable bit. Table 7-1 indicates the typical reduction in current consumption achieved by turning off the clocks.
- Use any one of the three low-power modes to reduce current even further.
- Turn off XCLKOUT, reducing I_{DDIO} current consumption by 15 mA (typical).
- Disable the pullups on pins that assume an output function and on XINTF pins for significant savings in I_{DDIO}.

Note

The TMS320C2834x devices are manufactured in a high-performance process node. Compared to the previous generation of the C28x devices, this process has more leakage current. Leakage current is significantly impacted by the operating temperature, and the increase in current with temperature is nonlinear. The total power for a given operating condition includes switching/active power plus leakage power. Low-power HALT mode power is due to the leakage current alone.

Figure 7-1 shows the typical leakage current across temperature.

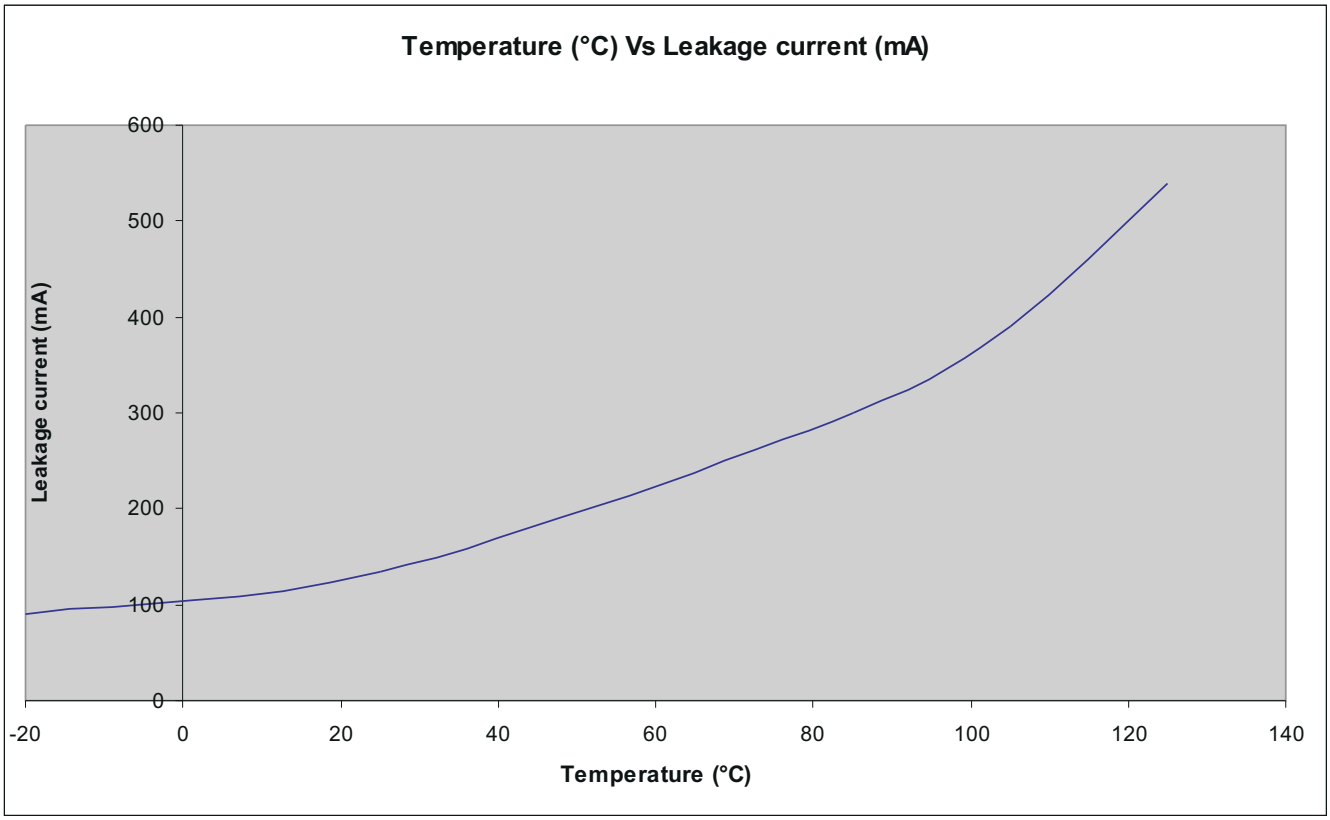

Figure 7-1. Temperature Versus Leakage Current (Typical)

Table 7-1. Typical Current Consumption by Various Peripherals (1)

PERIPHERAL MODULE	I_{DD} CURRENT REDUCTION (mA)
I2C	5
eQEP	5
ePWM	3

Copyright © 2021 Texas Instruments Incorporated

Table 7-1. Typical Current Consumption by Various Peripherals (1) (continued)

PERIPHERAL MODULE	I_{DD} CURRENT REDUCTION (mA)
eCAP	1
SCI	4
SPI	4
eCAN	2
McBSP	8
CPU-Timer	1
XINTF	4(2)
DMA	7
FPU	8

(1) All peripheral clocks (except CPU timer clocks) are disabled upon reset. Writing to or reading from peripheral registers is possible only after the peripheral clocks are turned on.

(2) Operating the XINTF bus has a significant effect on IDDIO current. It will increase considerably based on the following:
- How many address/data pins toggle from one cycle to another
- How fast they toggle
- Whether 16-bit or 32-bit interface is used and
- The load on these pins.
- Whether internal pullups are enabled on the XINTF pins.

7.6 Electrical Characteristics

over recommended operating conditions (unless otherwise noted)

PARAMETER			TEST CONDITIONS		MIN	TYP	MAX	UNIT
V_{OH}	High-level output voltage		$I_{OH} = I_{OH}$ MAX		2.4			V
			I_{OH} = 50 µA		V_{DDIO} – 0.2			
V_{OL}	Low-level output voltage		$I_{OL} = I_{OL}$ MAX				0.4	V
I_{IL}	Input current (low level)	Pin with pullup enabled	V_{DDIO} = 3.3 V, V_{IN} = 0 V	All I/Os (including $\overline{XRS}$)	–190		–100	µA
		Pin with pulldown enabled	V_{DDIO} = 3.3 V, V_{IN} = 0 V				±15	
I_{IH}	Input current (high level)	Pin with pullup enabled	V_{DDIO} = 3.3 V, $V_{IN} = V_{DDIO}$				±3	µA
		Pin with pulldown enabled	V_{DDIO} = 3.3 V, $V_{IN} = V_{DDIO}$		100		175	
I_{OZ}	Output current, pullup or pulldown disabled		$V_O = V_{DDIO}$ or 0 V				±15	µA
C_I	Input capacitance					2		pF

Copyright © 2021 Texas Instruments Incorporated

7.7 Thermal Resistance Characteristics

7.7.1 ZHH Package

		°C/W(1) (2)	AIR FLOW (lfm)(3)
$R\Theta_{JC}$	Junction-to-case	10.3	0
$R\Theta_{JB}$	Junction-to-board	21.2	0
$R\Theta_{JA}$ (High k PCB)	Junction-to-free air	40.8	0
		32.4	150
		31.0	250
		29.1	500
Psi_{JT}	Junction-to-package top	0.4	0
		0.5	150
		0.6	250
		0.8	500
Psi_{JB}	Junction-to-board	21.0	0
		20.4	150
		20.2	250
		19.9	500

(1) °C/W = degrees Celsius per watt

(2) These values are based on a JEDEC-defined 2S2P system (with the exception of the Theta JC [$R\Theta_{JC}$] value, which is based on a JEDEC-defined 1S0P system) and will change based on environment as well as application. For more information, see these EIA/JEDEC standards:

- JESD51-2, *Integrated Circuits Thermal Test Method Environmental Conditions - Natural Convection (Still Air)*
- JESD51-3, *Low Effective Thermal Conductivity Test Board for Leaded Surface Mount Packages*
- JESD51-7, *High Effective Thermal Conductivity Test Board for Leaded Surface Mount Packages*
- JESD51-9, *Test Boards for Area Array Surface Mount Package Thermal Measurements*

(3) lfm = linear feet per minute

7.7.2 ZFE Package

		°C/W(1) (2)	AIR FLOW (lfm)(3)
$R\Theta_{JC}$	Junction-to-case	14	0
$R\Theta_{JB}$	Junction-to-board	13.9	0
$R\Theta_{JA}$ (High k PCB)	Junction-to-free air	30	0
		21.8	150
		20.6	250
		19.1	500
Psi_{JT}	Junction-to-package top	1.24	0
		2.63	150
		3.15	250
		4.05	500
Psi_{JB}	Junction-to-board	14	0
		13.6	150
		13.5	250
		13.4	500

(1) °C/W = degrees Celsius per watt

(2) These values are based on a JEDEC-defined 2S2P system (with the exception of the Theta JC [$R\Theta_{JC}$] value, which is based on a JEDEC-defined 1S0P system) and will change based on environment as well as application. For more information, see these EIA/JEDEC standards:

- JESD51-2, *Integrated Circuits Thermal Test Method Environmental Conditions - Natural Convection (Still Air)*
- JESD51-3, *Low Effective Thermal Conductivity Test Board for Leaded Surface Mount Packages*

Copyright © 2021 Texas Instruments Incorporated

- JESD51-7, *High Effective Thermal Conductivity Test Board for Leaded Surface Mount Packages*
- JESD51-9, *Test Boards for Area Array Surface Mount Package Thermal Measurements*

(3) lfm = linear feet per minute

7.8 Thermal Design Considerations

Based on the end application design and operational profile, the I_{DD} and I_{DDIO} currents could vary. Systems that exceed the recommended maximum power dissipation in the end product may require additional thermal enhancements. Ambient temperature (T_A) varies with the end application and product design. The critical factor that affects reliability and functionality is T_J, the junction temperature, not the ambient temperature. Hence, care should be taken to keep T_J within the specified limits. T_{case} should be measured to estimate the operating junction temperature T_J. T_{case} is normally measured at the center of the package top-side surface. The thermal application report *Semiconductor and IC package thermal metrics* helps to understand the thermal metrics and definitions.

Copyright © 2021 Texas Instruments Incorporated

7.9 Timing and Switching Characteristics

7.9.1 Timing Parameter Symbology

Timing parameter symbols used are created in accordance with JEDEC Standard 100. To shorten the symbols, some of the pin names and other related terminology have been abbreviated as follows:

Lowercase subscripts and their meanings:		Letters and symbols and their meanings:	
a	access time	H	High
c	cycle time (period)	L	Low
d	delay time	V	Valid
f	fall time	X	Unknown, changing, or don't care level
h	hold time	Z	High impedance
r	rise time		
su	setup time		
t	transition time		
v	valid time		
w	pulse duration (width)		

7.9.1.1 General Notes on Timing Parameters

All output signals from the 28x devices (including XCLKOUT) are derived from an internal clock such that all output transitions for a given half-cycle occur with a minimum of skewing relative to each other.

The signal combinations shown in the following timing diagrams may not necessarily represent actual cycles. For actual cycle examples, see the appropriate cycle description section of this document.

7.9.1.2 Test Load Circuit

This test load circuit is used to measure all switching characteristics provided in this document.

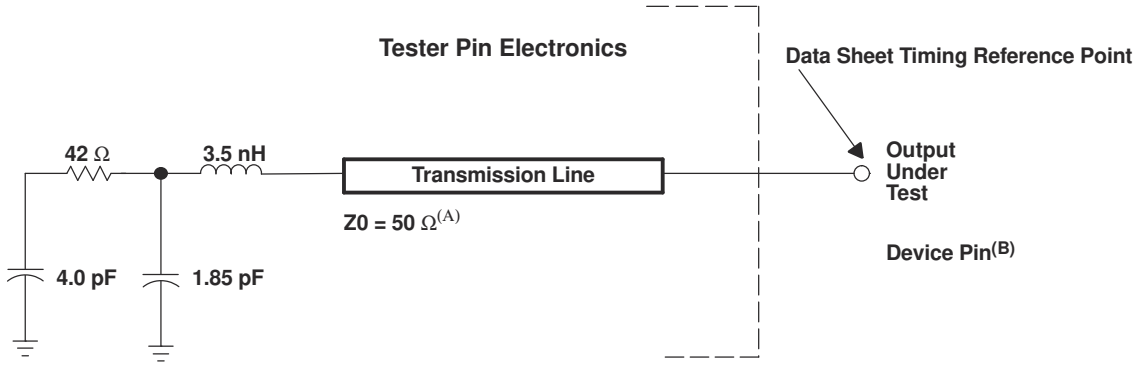

A. Input requirements in this data sheet are tested with an input slew rate of < 4 Volts per nanosecond (4 V/ns) at the device pin.

B. The data sheet provides timing at the device pin. For output timing analysis, the tester pin electronics and its transmission line effects must be taken into account. A transmission line with a delay of 2 ns or longer can be used to produce the desired transmission line effect. The transmission line is intended as a load only. It is not necessary to add or subtract the transmission line delay (2 ns or longer) from the data sheet timing.

Figure 7-2. 3.3-V Test Load Circuit

Copyright © 2021 Texas Instruments Incorporated

7.9.1.3 Device Clock Table

This section provides the timing requirements and switching characteristics for the various clock options available. Section 7.9.1.3.1 and Section 7.9.1.3.2 list the cycle times of various clocks.

7.9.1.3.1 Clocking and Nomenclature (300-MHz Devices)

			MIN	NOM	MAX	UNIT
On-chip oscillator clock (crystal/resonator–X1/X2)		$t_{c(OSC)}$, Cycle time	33.3		125	ns
		Frequency	8		30	MHz
XCLKIN(5)	PLL enabled	$t_{c(CI)}$, Cycle time (C8)	6.67		50	ns
		Frequency	2		150	MHz
	PLL disabled	$t_{c(CI)}$, Cycle time (C8)	6.67		250	ns
		Frequency	4		150	MHz
X1(5)	PLL enabled	$t_{c(CI)}$, Cycle time (C8)	10		50	ns
		Frequency	2		100	MHz
	PLL disabled	$t_{c(CI)}$, Cycle time (C8)	10		250	ns
		Frequency	4		100	MHz
SYSCLKOUT		$t_{c(SCO)}$, Cycle time	3.33		500	ns
		Frequency	2		300	MHz
XCLKOUT		$t_{c(XCO)}$, Cycle time	13.3		2000	ns
		Frequency	0.5		75(4)	MHz
HSPCLK/EXTADCCLK(2)		$t_{c(HCO)}$, Cycle time	25			ns
		Frequency			40	MHz
LSPCLK(1)		$t_{c(LCO)}$, Cycle time	6.67	13.3(3)		ns
		Frequency		75(3)	150	MHz

(1) Lower LSPCLK and HSPCLK will reduce device power consumption.
(2) This frequency is limited by GPIO switching characteristics.
(3) This is the value if SYSCLKOUT = 300 MHz.
(4) Although the maximum XCLKOUT frequency is 75 MHz, this value may not be attainable depending on SYSCLKOUT and available prescalers.
(5) The input clock frequency and PLLCR[DIV] values should be chosen such that the output frequency of the PLL(VCOCLK) lies between 400 MHz to 600 MHz.

Copyright © 2021 Texas Instruments Incorporated

7.9.1.3.2 Clocking and Nomenclature (200-MHz Devices)

			MIN	NOM	MAX	UNIT
On-chip oscillator clock (crystal/resonator–X1/X2)		$t_{c(OSC)}$, Cycle time	33.3		125	ns
		Frequency	8		30	MHz
XCLKIN[5]	PLL enabled	$t_{c(CI)}$, Cycle time (C8)	6.67		50	ns
		Frequency	2		150	MHz
	PLL disabled	$t_{c(CI)}$, Cycle time (C8)	6.67		250	ns
		Frequency	4		150	MHz
X1[5]	PLL enabled	$t_{c(CI)}$, Cycle time (C8)	10		50	ns
		Frequency	2		100	MHz
	PLL disabled	$t_{c(CI)}$, Cycle time (C8)	10		250	ns
		Frequency	4		100	MHz
SYSCLKOUT		$t_{c(SCO)}$, Cycle time	5		500	ns
		Frequency	2		200	MHz
XCLKOUT		$t_{c(XCO)}$, Cycle time	13.3		2000	ns
		Frequency	0.5		75[4]	MHz
HSPCLK/EXTADCCLK[1]		$t_{c(HCO)}$, Cycle time	8			ns
		Frequency			40	MHz
LSPCLK[2]		$t_{c(LCO)}$, Cycle time	10	20[3]		ns
		Frequency		50[3]	100	MHz

(1) This frequency is limited by GPIO switching characteristics.
(2) Lower LSPCLK and HSPCLK will reduce device power consumption.
(3) This is the value if SYSCLKOUT = 200 MHz.
(4) Although the maximum XCLKOUT frequency is 75 MHz, this value may not be attainable depending on SYSCLKOUT and available prescalers.
(5) The input clock frequency and PLLCR[DIV] values should be chosen such that the output frequency of the PLL(VCOCLK) lies between 400 MHz to 600 MHz.

Copyright © 2021 Texas Instruments Incorporated

7.9.2 Power Sequencing

No special requirements are placed on the power up/down sequence of the various power pins to ensure the correct reset state for all the modules. However, if the 3.3-V transistors in the level shifting output buffers of the I/O pins are powered prior to the 1.1-V/1.2-V transistors, it is possible for the output buffers to turn on, causing a glitch to occur on the pin during power up. To avoid this behavior, power the V_{DD} pins prior to or simultaneously with the V_{DDIO} pins, ensuring that the V_{DD} pins have reached 0.7-V before the V_{DDIO} pins reach 0.7 V. The 1.8-V rail for the PLL and oscillator logic can be powered up along with V_{DD}/V_{DDIO} rails. The 1.8-V rail must be powered even if the PLL is not used. It should never be left unpowered. In any configuration, all the rails should ramp up within t_{pup} (5 ms, typical) to allow early stability of clocks and IOs.

There is a requirement on the $\overline{XRS}$ pin:

- During power up, the $\overline{XRS}$ pin must be held low for $t_{w(RSL1)}$ after the input clock is stable. This is to enable the entire device to start from a known condition.

No voltage larger than a diode drop (0.7 V) above V_{DDIO} should be applied to any digital pin before powering up the device. Voltages applied to pins on an unpowered device can bias internal P-N junctions in unintended ways and produce unpredictable results.

7.9.2.1 Power Management and Supervisory Circuit Solutions

LDO selection depends on the total power consumed in the end application. Go to the Power Management page for a list of TI power management ICs. Click the Reference designs tab for specific power management reference designs.

Copyright © 2021 Texas Instruments Incorporated

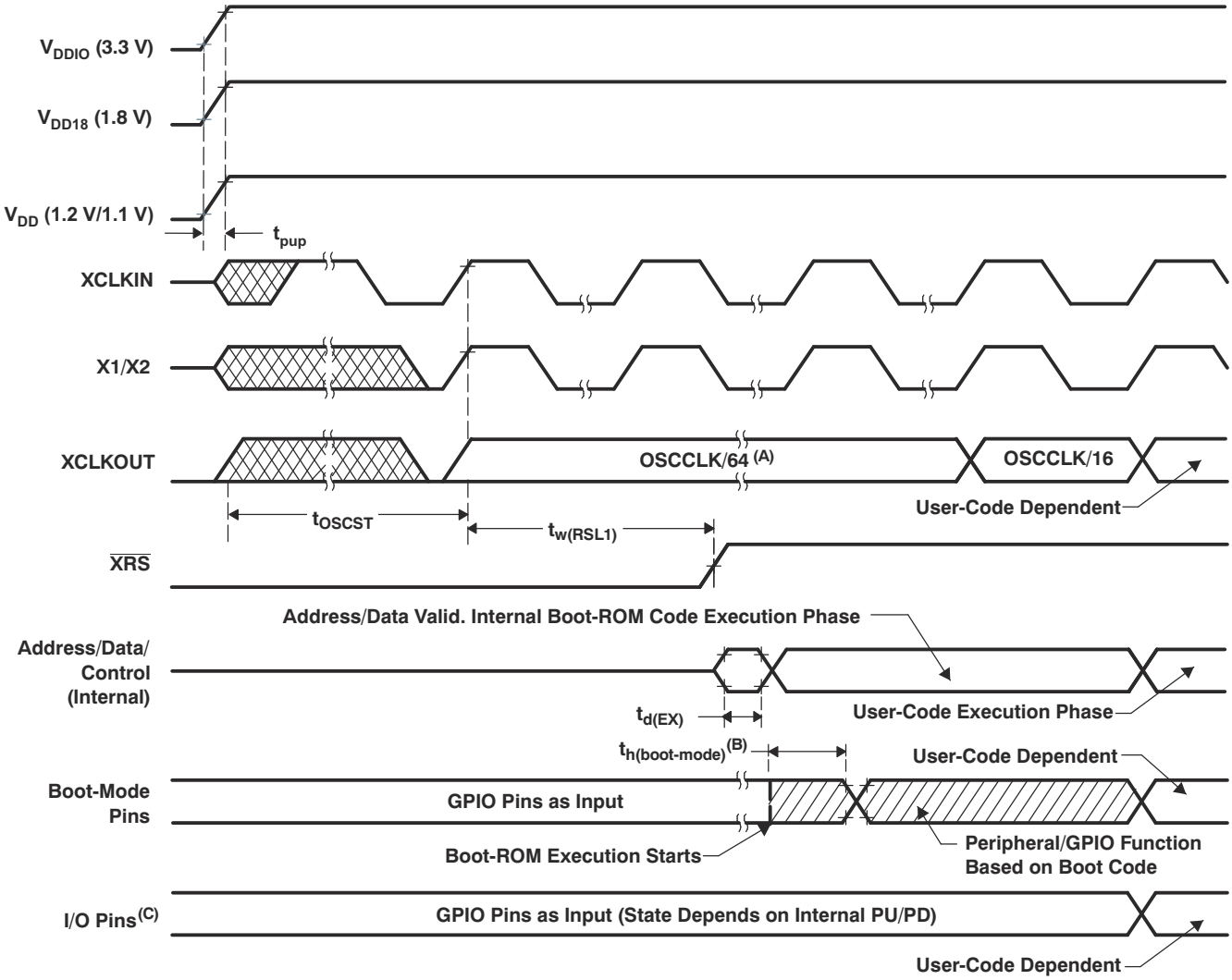

A. Upon power up, SYSCLKOUT is OSCCLK/8. Because the XTIMCLK, CLKMODE, and BY4CLKMODE bits in the XINTFCNF2 register come up with a reset state of 1, SYSCLKOUT is further divided by 8 before it applies to XCLKOUT. This explains why XCLKOUT = OSCCLK/64 during this phase. Subsequently, boot ROM changes SYSCLKOUT to OSCLK/2. Because the XTIMCLK register is unchanged by the boot ROM, XCLKOUT is OSCCLK/16 during this phase.

B. After reset, the boot ROM code samples Boot Mode pins. Based on the status of the Boot Mode pin, the boot code branches to destination memory or boot code function. If boot ROM code executes after power-on conditions (in debugger environment), the boot code execution time is based on the current SYSCLKOUT speed. The SYSCLKOUT will be based on user environment and could be with or without PLL enabled.

C. See Section 7.9.2 for requirements to ensure a high-impedance state for GPIO pins during power up.

Figure 7-3. Power-on Reset

Copyright © 2021 Texas Instruments Incorporated

7.9.2.2 Reset ($\overline{XRS}$) Timing Requirements

			MIN	NOM	MAX	UNIT
$t_{w(RSL1)}$ (1)	Pulse duration, stable input clock to $\overline{XRS}$ high		$64t_{c(OSCCLK)}$			cycles
$t_{w(RSL2)}$	Pulse duration, $\overline{XRS}$ low	Warm reset	$64t_{c(OSCCLK)}$			cycles
$t_{w(WDRS)}$	Pulse duration, reset pulse generated by watchdog			$512t_{c(OSCCLK)}$		cycles
$t_{d(EX)}$	Delay time, address/data valid after $\overline{XRS}$ high			$32t_{c(OSCCLK)}$		cycles
t_{OSCST} (2)	Oscillator start-up time		1	10		ms
$t_{h(boot-mode)}$	Hold time for boot-mode pins		$200t_{c(OSCCLK)}$			cycles
t_{pup}	Power-up time			5		ms

(1) In addition to the $t_{w(RSL1)}$ requirement, $\overline{XRS}$ must be low until V_{DD} has reached the minimum operating voltage.
(2) Dependent on crystal/resonator and board design.

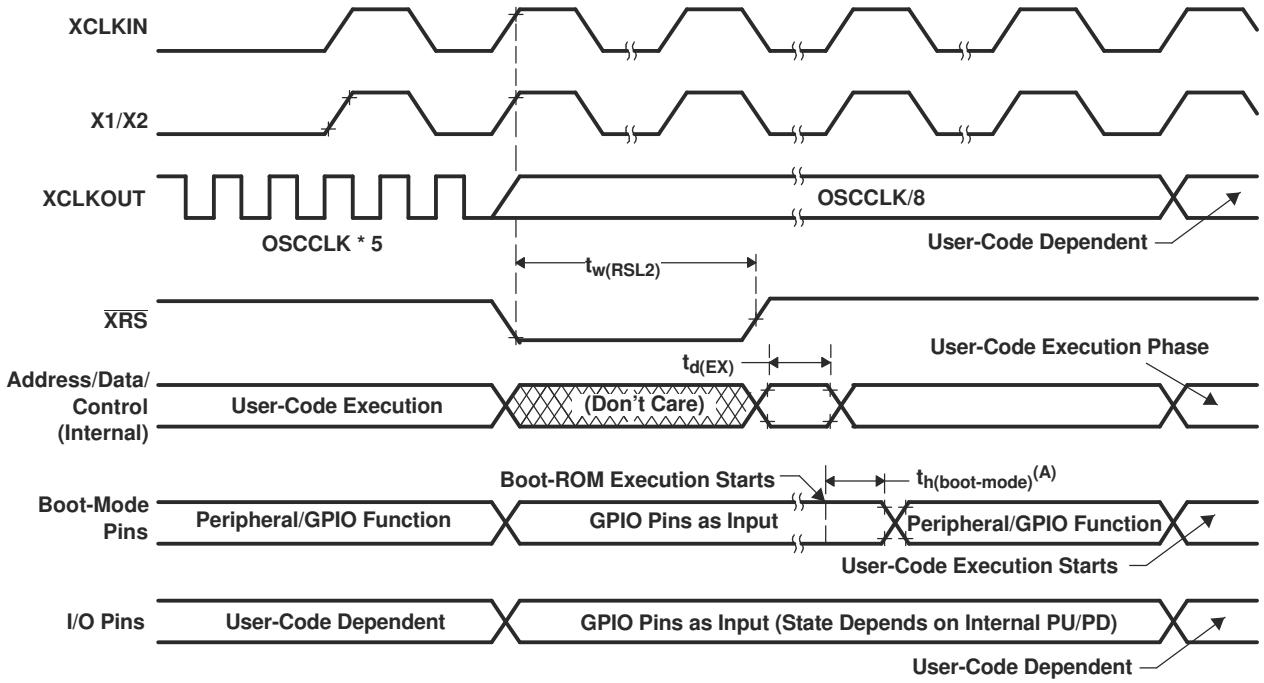

A. After reset, the Boot ROM code samples BOOT Mode pins. Based on the status of the Boot Mode pin, the boot code branches to destination memory or boot code function. If Boot ROM code executes after power-on conditions (in debugger environment), the Boot code execution time is based on the current SYSCLKOUT speed. The SYSCLKOUT will be based on user environment and could be with or without PLL enabled.

Figure 7-4. Warm Reset

Copyright © 2021 Texas Instruments Incorporated

Figure 7-5 shows an example for the effect of writing into PLLCR register. In the first phase, PLLCR = 0x0003 and SYSCLKOUT = OSCCLK × 2. The PLLCR is then written with 0x0007 (setting for OSCCLK × 8). Right after the PLLCR register is written, the PLL lock-up phase begins. During this phase, SYSCLKOUT = OSCCLK/2. After the PLL lock-up is complete (which takes 2600 OSCCLK cycles), SYSCLKOUT reflects the new operating frequency, OSCCLK × 4.

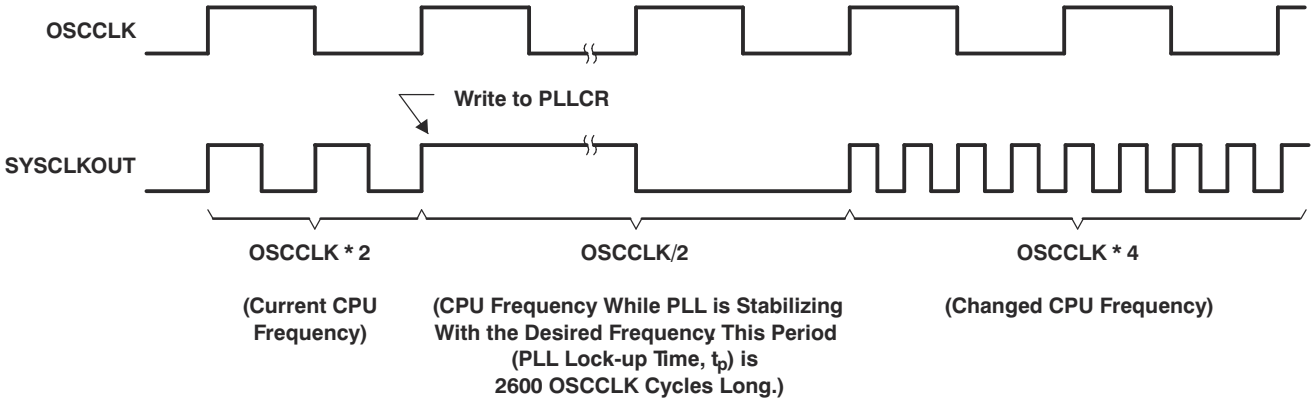

Figure 7-5. Example of Effect of Writing Into PLLCR Register

7.9.3 Clock Requirements and Characteristics

7.9.3.1 XCLKIN/X1 Timing Requirements – PLL Enabled

NO.			MIN	MAX	UNIT
C9	$t_{f(CI)}$	Fall time, XCLKIN[1]		4	ns
C10	$t_{r(CI)}$	Rise time, XCLKIN[1]		4	ns
C11	$t_{w(CIL)}$	Pulse duration, XCLKIN low as a percentage of $t_{c(OSCCLK)}$ [1]	40%	60%	
C12	$t_{w(CIH)}$	Pulse duration, XCLKIN high as a percentage of $t_{c(OSCCLK)}$ [1]	40%	60%	

(1) This applies to the X1 pin also.

7.9.3.2 XCLKIN/X1 Timing Requirements – PLL Disabled

NO.			MIN	MAX	UNIT
C9	$t_{f(CI)}$	Fall time, XCLKIN[1]		2	ns
C10	$t_{r(CI)}$	Rise time, XCLKIN[1]		2	ns
C11	$t_{w(CIL)}$	Pulse duration, XCLKIN low as a percentage of $t_{c(OSCCLK)}$ [1]	45%	55%	
C12	$t_{w(CIH)}$	Pulse duration, XCLKIN high as a percentage of $t_{c(OSCCLK)}$ [1]	45%	55%	

(1) This applies to the X1 pin also.

The possible configuration modes are shown in Table 8-34.

7.9.3.3 XCLKOUT Switching Characteristics (PLL Bypassed or Enabled) [1] [2]

NO.	PARAMETER		MIN	TYP	MAX	UNIT
C1	$t_{c(XCO)}$	Cycle time, XCLKOUT	13.3			ns
C3	$t_{f(XCO)}$	Fall time, XCLKOUT		2		ns
C4	$t_{r(XCO)}$	Rise time, XCLKOUT		2		ns
C5	$t_{w(XCOL)}$	Pulse duration, XCLKOUT low	H – 2		H + 2	ns
C6	$t_{w(XCOH)}$	Pulse duration, XCLKOUT high	H – 2		H + 2	ns
	t_p	PLL lock time			$2600t_{c(OSCCLK)}$ [3]	cycles

(1) A load of 40 pF is assumed for these parameters.
(2) $H = 0.5t_{c(XCO)}$
(3) OSCCLK is either the output of the on-chip oscillator or the output from an external oscillator.

7.9.3.4 Timing Diagram

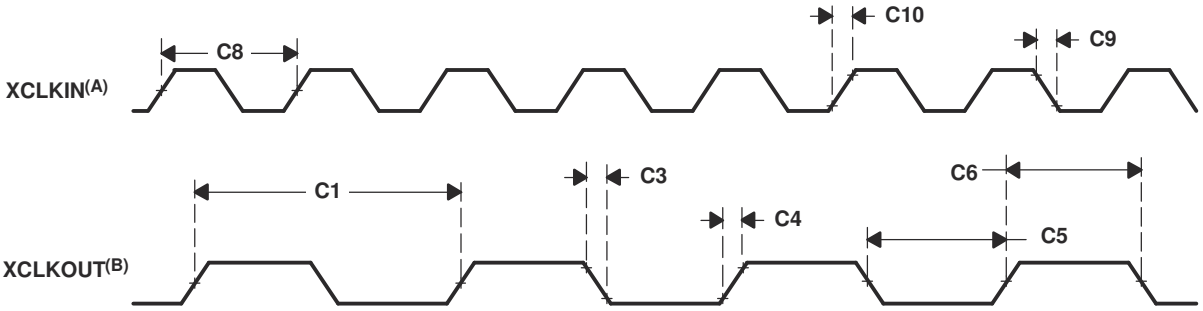

A. The relationship of XCLKIN to XCLKOUT depends on the divide factor chosen. The waveform relationship shown is intended to illustrate the timing parameters only and may differ based on actual configuration.
B. XCLKOUT configured to reflect SYSCLKOUT.

Figure 7-6. Clock Timing

Copyright © 2021 Texas Instruments Incorporated

7.9.4 Peripherals

7.9.4.1 General-Purpose Input/Output (GPIO)

7.9.4.1.1 GPIO - Output Timing

7.9.4.1.1.1 General-Purpose Output Switching Characteristics

PARAMETER			MIN	MAX	UNIT
$t_{r(GPO)}$	Rise time, GPIO switching low to high	All GPIOs		11	ns
$t_{f(GPO)}$	Fall time, GPIO switching high to low	All GPIOs		11	ns
t_{fGPO}	Toggling frequency, GPO pins			40	MHz

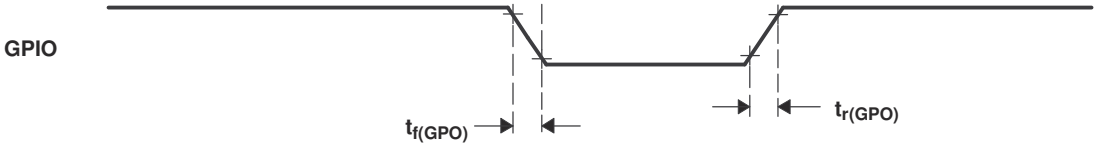

Figure 7-7. General-Purpose Output Timing

7.9.4.1.2 GPIO - Input Timing

7.9.4.1.2.1 General-Purpose Input Timing Requirements

			MIN	MAX	UNIT
$t_{w(SP)}$	Sampling period	QUALPRD = 0	$1t_{c(SCO)}$		cycles
		QUALPRD ≠ 0	$2t_{c(SCO)}$ * QUALPRD		
$t_{w(IQSW)}$	Input qualifier sampling window		$t_{w(SP)}$ * (n(1) – 1)		cycles
$t_{w(GPI)}$ (2)	Pulse duration, GPIO low/high	Synchronous mode	$2t_{c(SCO)}$		cycles
		With input qualifier	$t_{w(IQSW)} + t_{w(SP)} + 1t_{c(SCO)}$		

(1) "n" represents the number of qualification samples as defined by GPxQSELn register.
(2) For $t_{w(GPI)}$, pulse width is measured from V_{IL} to V_{IL} for an active low signal and V_{IH} to V_{IH} for an active high signal.

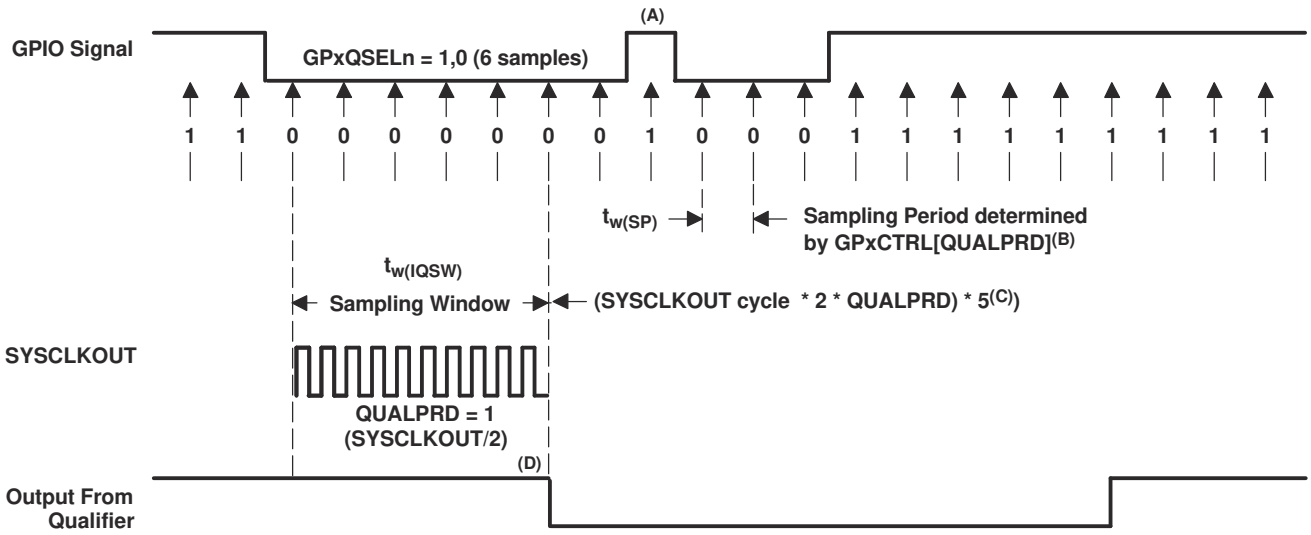

A. This glitch will be ignored by the input qualifier. The QUALPRD bit field specifies the qualification sampling period. It can vary from 00 to 0xFF. If QUALPRD = 00, then the sampling period is 1 SYSCLKOUT cycle. For any other value "n", the qualification sampling period in 2n SYSCLKOUT cycles (that is, at every 2n SYSCLKOUT cycles, the GPIO pin will be sampled).
B. The qualification period selected through the GPxCTRL register applies to groups of 8 GPIO pins.
C. The qualification block can take either three or six samples. The GPxQSELn Register selects which sample mode is used.
D. In the example shown, for the qualifier to detect the change, the input should be stable for 10 SYSCLKOUT cycles or greater. In other words, the inputs should be stable for (5 × QUALPRD × 2) SYSCLKOUT cycles. This would ensure 5 sampling periods for detection to occur. Because external signals are driven asynchronously, an 13-SYSCLKOUT-wide pulse ensures reliable recognition.

Figure 7-8. Sampling Mode

Copyright © 2021 Texas Instruments Incorporated

7.9.4.1.3 Sampling Window Width for Input Signals

The following section summarizes the sampling window width for input signals for various input qualifier configurations.

Sampling frequency denotes how often a signal is sampled with respect to SYSCLKOUT.

Sampling frequency = SYSCLKOUT/(2 * QUALPRD), if QUALPRD ≠ 0

Sampling frequency = SYSCLKOUT, if QUALPRD = 0

Sampling period = SYSCLKOUT cycle × 2 × QUALPRD, if QUALPRD ≠ 0

In the above equations, SYSCLKOUT cycle indicates the time period of SYSCLKOUT.

Sampling period = SYSCLKOUT cycle, if QUALPRD = 0

In a given sampling window, either 3 or 6 samples of the input signal are taken to determine the validity of the signal. This is determined by the value written to GPxQSELn register.

Case 1:

Qualification using three samples

Sampling window width = (SYSCLKOUT cycle × 2 × QUALPRD) × 2, if QUALPRD ≠ 0

Sampling window width = (SYSCLKOUT cycle) × 2, if QUALPRD = 0

Case 2:

Qualification using six samples

Sampling window width = (SYSCLKOUT cycle × 2 × QUALPRD) × 5, if QUALPRD ≠ 0

Sampling window width = (SYSCLKOUT cycle) × 5, if QUALPRD = 0

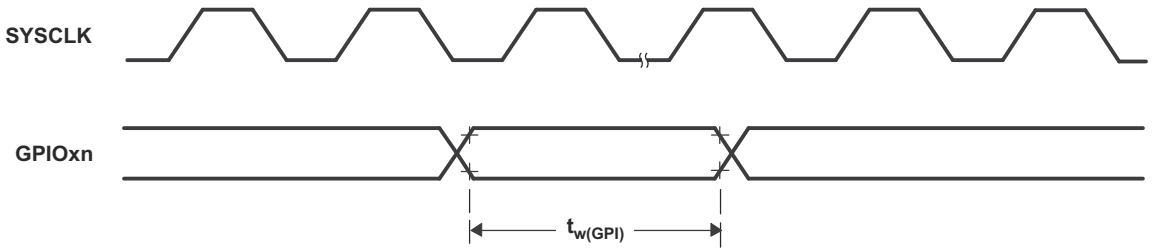

Figure 7-9. General-Purpose Input Timing

7.9.4.1.4 Low-Power Mode Wakeup Timing

The wakeup signal fed to a GPIO pin to wake up the device must meet the minimum pulse width requirement. Furthermore, this signal must be free of glitches. If a noisy signal is fed to a GPIO pin, the wakeup behavior of the device will not be deterministic and the device may not exit low-power mode for subsequent wakeup pulses.

Section 7.9.4.1.4.1 shows the timing requirements, Section 7.9.4.1.4.2 shows the switching characteristics, and Figure 7-10 shows the timing diagram for IDLE mode.

7.9.4.1.4.1 IDLE Mode Timing Requirements (1)

			MIN	MAX	UNIT
$t_{w(WAKE-INT)}$	Pulse duration, external wake-up signal	Without input qualifier	$2t_{c(SCO)}$		cycles
		With input qualifier	$5t_{c(SCO)} + t_{w(IQSW)}$		

(1) For an explanation of the input qualifier parameters, see Section 7.9.4.1.2.1.

7.9.4.1.4.2 IDLE Mode Switching Characteristics (1)

PARAMETER		TEST CONDITIONS	MIN	MAX	UNIT
$t_{d(WAKE-IDLE)}$	Delay time, external wake signal to program execution resume (2) • Wake-up from SARAM	Without input qualifier		$20t_{c(SCO)}$	cycles
		With input qualifier		$20t_{c(SCO)} + t_{w(IQSW)}$	

(1) For an explanation of the input qualifier parameters, see Section 7.9.4.1.2.1.
(2) This is the time taken to begin execution of the instruction that immediately follows the IDLE instruction. execution of an ISR (triggered by the wake up) signal involves additional latency.

7.9.4.1.4.3 IDLE Mode Timing Diagram

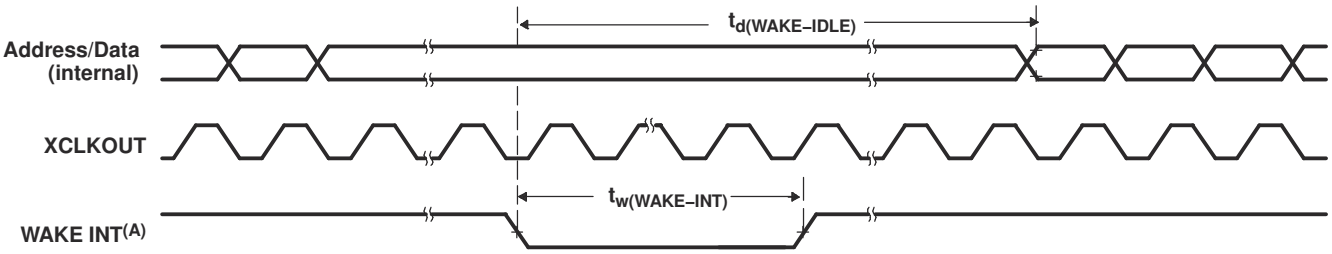

A. WAKE INT can be any enabled interrupt, $\overline{\text{WDINT}}$, XNMI, or $\overline{\text{XRS}}$.

Figure 7-10. IDLE Entry and Exit Timing

Copyright © 2021 Texas Instruments Incorporated

7.9.4.1.4.4 STANDBY Mode Timing Requirements

			MIN	MAX	UNIT
$t_{w(WAKE-INT)}$	Pulse duration, external wake-up signal	Without input qualification	$3t_{c(OSCCLK)}$		cycles
		With input qualification(1)	(2 + QUALSTDBY) * $t_{c(OSCCLK)}$		

(1) QUALSTDBY is a 6-bit field in the LPMCR0 register.

7.9.4.1.4.5 STANDBY Mode Switching Characteristics

PARAMETER		TEST CONDITIONS	MIN	MAX	UNIT
$t_{d(IDLE-XCOL)}$	Delay time, IDLE instruction executed to XCLKOUT low		$32t_{c(SCO)}$	$45t_{c(SCO)}$	cycles
$t_{d(WAKE-STBY)}$	Delay time, external wake signal to program execution resume(1) • Wake up from SARAM	Without input qualifier		$100t_{c(SCO)}$	cycles
		With input qualifier		$100t_{c(SCO)} + t_{w(WAKE-INT)}$	

(1) This is the time taken to begin execution of the instruction that immediately follows the IDLE instruction. execution of an ISR (triggered by the wake up signal) involves additional latency.

7.9.4.1.4.6 STANDBY Mode Timing Diagram

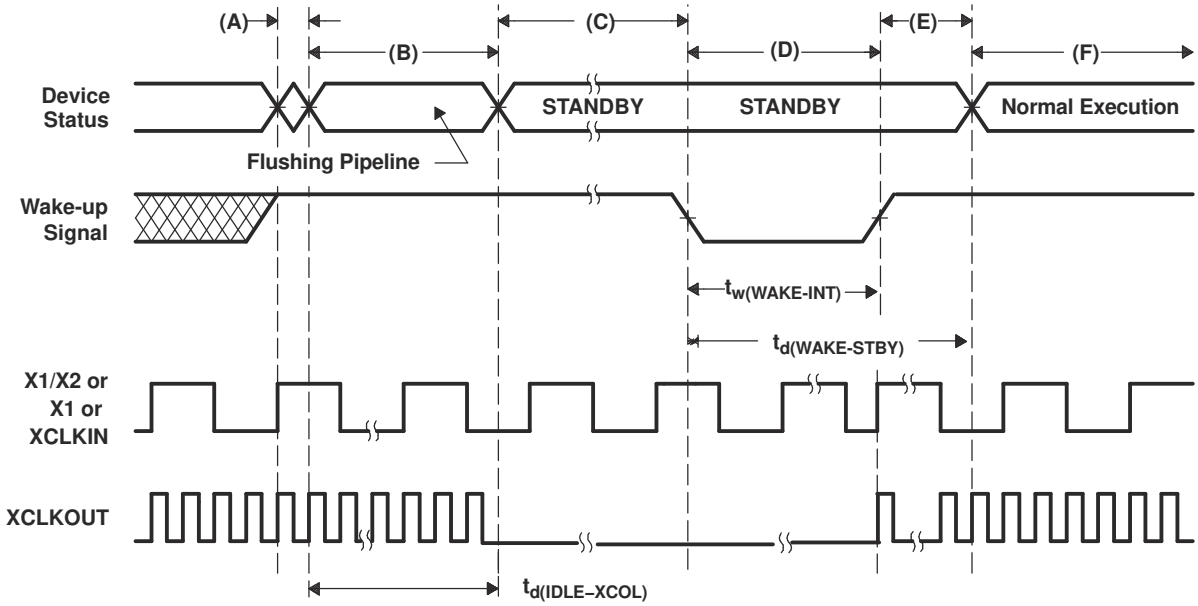

A. IDLE instruction is executed to put the device into STANDBY mode.
B. The PLL block responds to the STANDBY signal. SYSCLKOUT is held for 32 cycles before being turned off. This delay enables the CPU pipeline and any other pending operations to flush properly. If an access to XINTF is in progress and its access time is longer than this number then it will fail. TI recommends entering STANDBY mode from SARAM without an XINTF access in progress.
C. Clock to the peripherals are turned off. However, the PLL and watchdog are not shut down. The device is now in STANDBY mode.
D. The external wake-up signal is driven active.
E. After a latency period, the STANDBY mode is exited.
F. Normal execution resumes. The device will respond to the interrupt (if enabled).

Figure 7-11. STANDBY Entry and Exit Timing Diagram

Copyright © 2021 Texas Instruments Incorporated

7.9.4.1.4.7 HALT Mode Timing Requirements

		MIN	MAX	UNIT
$t_{w(WAKE-GPIO)}$	Pulse duration, GPIO wake-up signal	$t_{oscst} + 2t_{c(OSCCLK)}$ (1)		cycles
$t_{w(WAKE-XRS)}$	Pulse duration, $\overline{XRS}$ wakeup signal	$t_{oscst} + 8t_{c(OSCCLK)}$		cycles

(1) See Section 7.9.2.2 for an explanation of t_{oscst}.

7.9.4.1.4.8 HALT Mode Switching Characteristics

PARAMETER		MIN	MAX	UNIT
$t_{d(IDLE-XCOL)}$	Delay time, IDLE instruction executed to XCLKOUT low	$32t_{c(SCO)}$	$45t_{c(SCO)}$	cycles
t_p	PLL lock-up time		$2600t_{c(OSCCLK)}$	cycles
$t_{d(WAKE-HALT)}$	Delay time, PLL lock to program execution resume • Wake up from SARAM		$35t_{c(SCO)}$	cycles

7.9.4.1.4.9 HALT Mode Timing Diagram

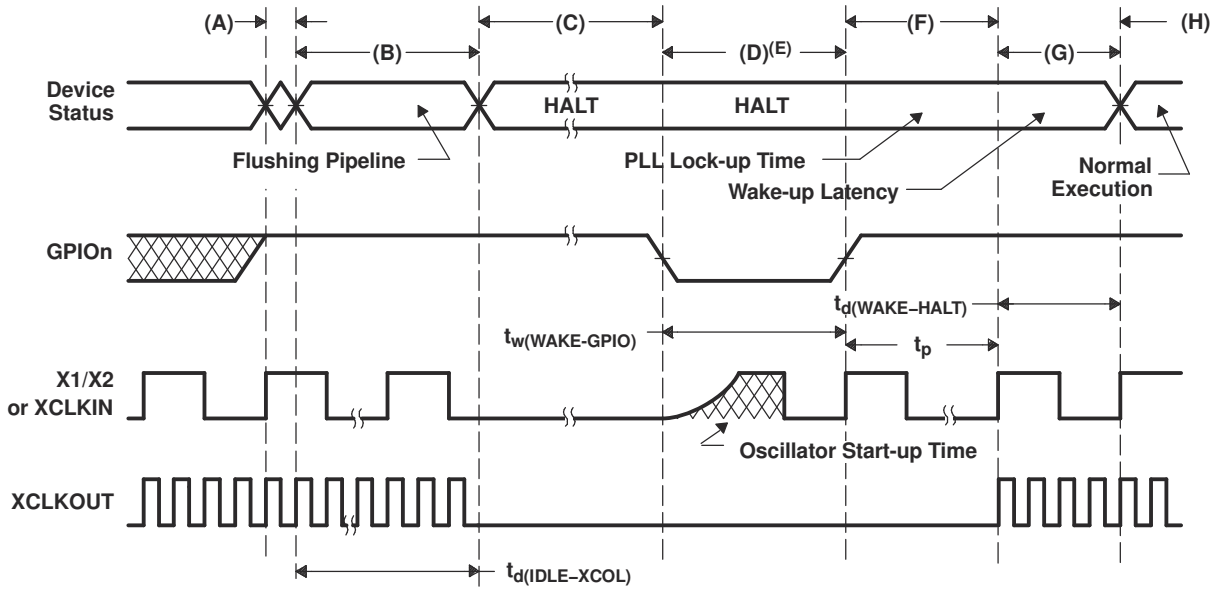

A. IDLE instruction is executed to put the device into HALT mode.
B. The PLL block responds to the HALT signal. SYSCLKOUT is held for 32 cycles before oscillator is turned off and the CLKIN to the core is stopped. This delay enables the CPU pipeline and any other pending operations to flush properly. If an access to XINTF is in progress and its access time is longer than this number then it will fail. It is recommended to enter HALT mode from SARAM without an XINTF access in progress.
C. Clocks to the peripherals are turned off and the PLL is shut down. If a quartz crystal or ceramic resonator is used as the clock source, the internal oscillator is shut down as well. The device is now in HALT mode and consumes absolute minimum power.
D. When the GPIOn pin (used to bring the device out of HALT) is driven low, the oscillator is turned on and the oscillator wake-up sequence is initiated. The GPIO pin should be driven high only after the oscillator has stabilized. This enables the provision of a clean clock signal during the PLL lock sequence. Because the falling edge of the GPIO pin asynchronously begins the wakeup process, care should be taken to maintain a low noise environment prior to entering and during HALT mode.
E. The wake-up signal fed to a GPIO pin to wake up the device must meet the minimum pulse width requirement. Furthermore, this signal must be free of glitches. If a noisy signal is fed to a GPIO pin, the wake-up behavior of the device will not be deterministic and the device may not exit low-power mode for subsequent wake-up pulses.
F. Once the oscillator has stabilized, the PLL lock sequence is initiated, which takes 2,600 OSCCLK (X1/X2 or X1 or XCLKIN) cycles.
G. Clocks to the core and peripherals are enabled. The HALT mode is now exited. The device will respond to the interrupt (if enabled), after a latency.
H. Normal operation resumes.

Figure 7-12. HALT Wakeup Using GPIOn

Copyright © 2021 Texas Instruments Incorporated

7.9.4.2 Enhanced Control Peripherals

7.9.4.2.1 Enhanced Pulse Width Modulator (ePWM) Timing

PWM refers to PWM outputs on ePWM1–6. Section 7.9.4.2.1.1 shows the ePWM timing requirements and Section 7.9.4.2.1.2, ePWM switching characteristics.

7.9.4.2.1.1 ePWM Timing Requirements (1)

			MIN	MAX	UNIT
$t_{w(SYCIN)}$	Sync input pulse width	Asynchronous	$2t_{c(SCO)}$		cycles
		Synchronous	$2t_{c(SCO)}$		
		With input qualifier	$1t_{c(SCO)} + t_{w(IQSW)}$		

(1) For an explanation of the input qualifier parameters, see Section 7.9.4.1.2.1.

7.9.4.2.1.2 ePWM Switching Characteristics

PARAMETER		TEST CONDITIONS	MIN	MAX	UNIT
$t_{w(PWM)}$	Pulse duration, PWMx output high/low		20		ns
$t_{w(SYNCOUT)}$	Sync output pulse width		$8t_{c(SCO)}$		cycles
$t_{d(PWM)tza}$	Delay time, trip input active to PWM forced high Delay time, trip input active to PWM forced low	no pin load		25	ns
$t_{d(TZ-PWM)HZ}$	Delay time, trip input active to PWM Hi-Z			20	ns

7.9.4.2.2 Trip-Zone Input Timing

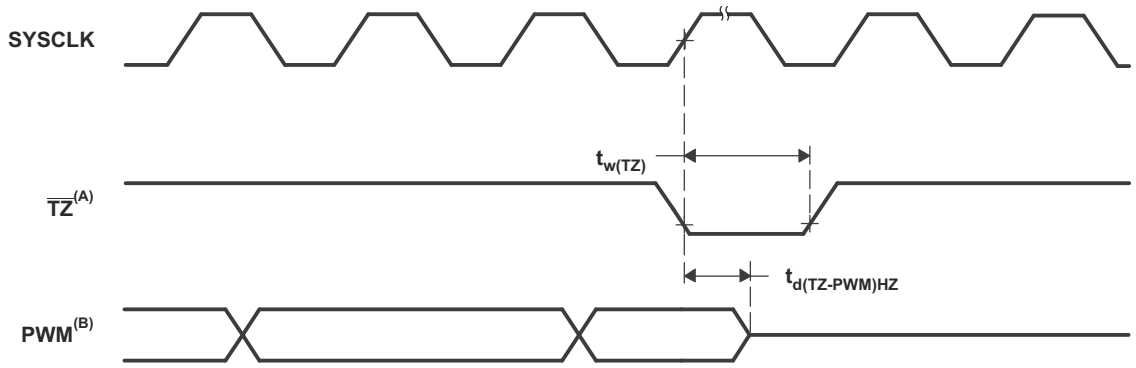

A. $\overline{TZ}$ - $\overline{TZ1}$, $\overline{TZ2}$, $\overline{TZ3}$, $\overline{TZ4}$, $\overline{TZ5}$, $\overline{TZ6}$

B. PWM refers to all the PWM pins in the device. The state of the PWM pins after $\overline{TZ}$ is taken high depends on the PWM recovery software.

Figure 7-13. PWM Hi-Z Characteristics

7.9.4.2.2.1 Trip-Zone Input Timing Requirements (1)

			MIN	MAX	UNIT
$t_{w(TZ)}$	Pulse duration, $\overline{TZx}$ input low	Asynchronous	$1t_{c(SCO)}$		cycles
		Synchronous	$2t_{c(SCO)}$		
		With input qualifier	$1t_{c(SCO)} + t_{w(IQSW)}$		

(1) For an explanation of the input qualifier parameters, see Section 7.9.4.1.2.1.

7.9.4.2.3 High-Resolution PWM Timing

Section 7.9.4.2.3.1 shows the high-resolution PWM switching characteristics.

7.9.4.2.3.1 High-Resolution PWM Characteristics at SYSCLKOUT = (150–300 MHz)

		MIN	TYP	MAX	UNIT
Micro Edge Positioning (MEP) step size[1]	V_{DD} = 1.2 V		55	120	ps
	V_{DD} = 1.1 V		65	140	ps

(1) The MEP step size will be largest at high temperature and minimum voltage on V_{DD}. MEP step size will increase with higher temperature and lower voltage and decrease with lower temperature and higher voltage.
Applications that use the HRPWM feature should use MEP Scale Factor Optimizer (SFO) estimation software functions. See the TI software libraries for details of using SFO function in end applications. SFO functions help to estimate the number of MEP steps per SYSCLKOUT period dynamically while the HRPWM is in operation.

7.9.4.2.4 Enhanced Capture (eCAP) Timing

Section 7.9.4.2.4.1 shows the eCAP timing requirement and Section 7.9.4.2.4.2 shows the eCAP switching characteristics.

7.9.4.2.4.1 Enhanced Capture (eCAP) Timing Requirements [1]

			MIN	MAX	UNIT
$t_{w(CAP)}$	Capture input pulse width	Asynchronous	$2t_{c(SCO)}$		cycles
		Synchronous	$2t_{c(SCO)}$		
		With input qualifier	$1t_{c(SCO)} + t_{w(IQSW)}$		

(1) For an explanation of the input qualifier parameters, see Section 7.9.4.1.2.1.

7.9.4.2.4.2 eCAP Switching Characteristics

PARAMETER		TEST CONDITIONS	MIN	MAX	UNIT
$t_{w(APWM)}$	Pulse duration, APWMx output high/low		20		ns

7.9.4.2.5 Enhanced Quadrature Encoder Pulse (eQEP) Timing

Section 7.9.4.2.5.1 shows the eQEP timing requirement and Section 7.9.4.2.5.2 shows the eQEP switching characteristics.

7.9.4.2.5.1 Enhanced Quadrature Encoder Pulse (eQEP) Timing Requirements [1]

			MIN	MAX	UNIT
$t_{w(QEPP)}$	QEP input period	Asynchronous[2]/synchronous	$2t_{c(SCO)}$		cycles
		With input qualifier	$2[1t_{c(SCO)} + t_{w(IQSW)}]$		
$t_{w(INDEXH)}$	QEP Index Input High time	Asynchronous[2]/synchronous	$2t_{c(SCO)}$		cycles
		With input qualifier	$2t_{c(SCO)} + t_{w(IQSW)}$		
$t_{w(INDEXL)}$	QEP Index Input Low time	Asynchronous[2]/synchronous	$2t_{c(SCO)}$		cycles
		With input qualifier	$2t_{c(SCO)} + t_{w(IQSW)}$		
$t_{w(STROBH)}$	QEP Strobe High time	Asynchronous[2]/synchronous	$2t_{c(SCO)}$		cycles
		With input qualifier	$2t_{c(SCO)} + t_{w(IQSW)}$		
$t_{w(STROBL)}$	QEP Strobe Input Low time	Asynchronous[2]/synchronous	$2t_{c(SCO)}$		cycles
		With input qualifier	$2t_{c(SCO)} + t_{w(IQSW)}$		

(1) For an explanation of the input qualifier parameters, see Section 7.9.4.1.2.1.
(2) Refer to the *TMS320C2834x Delfino™ MCUs Silicon Errata* for limitations in the asynchronous mode.

7.9.4.2.5.2 eQEP Switching Characteristics

PARAMETER		TEST CONDITIONS	MIN	MAX	UNIT
$t_{d(CNTR)xin}$	Delay time, external clock to counter increment			$4t_{c(SCO)}$	cycles

Copyright © 2021 Texas Instruments Incorporated

PARAMETER		TEST CONDITIONS	MIN	MAX	UNIT
$t_{d(PCS\text{-}OUT)QEP}$	Delay time, QEP input edge to position compare sync output			$6t_{c(SCO)}$	cycles

Copyright © 2021 Texas Instruments Incorporated

7.9.4.2.6 ADC Start-of-Conversion Timing

7.9.4.2.6.1 External ADC Start-of-Conversion Switching Characteristics

PARAMETER		MIN	MAX	UNIT
$t_{w(ADCSOCL)}$	Pulse duration, $\overline{ADCSOCxO}$ low	$32t_{c(HCO)}$		cycles

7.9.4.2.6.2 $\overline{ADCSOCAO}$ or $\overline{ADCSOCBO}$ Timing

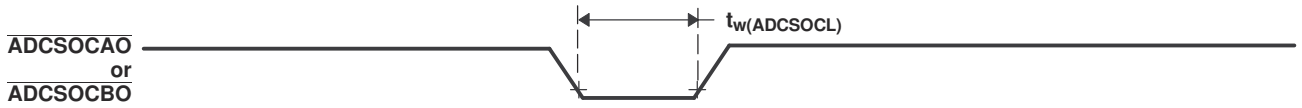

Figure 7-14. $\overline{ADCSOCAO}$ or $\overline{ADCSOCBO}$ Timing

7.9.4.3 External Interrupt Timing

7.9.4.3.1 External Interrupt Timing Requirements (1)

			MIN	MAX	UNIT
$t_{w(INT)}$ (2)	Pulse duration, INT input low/high	Synchronous	$1t_{c(SCO)}$		cycles
		With qualifier	$1t_{c(SCO)} + t_{w(IQSW)}$		

(1) For an explanation of the input qualifier parameters, see Section 7.9.4.1.2.1.
(2) This timing is applicable to any GPIO pin configured for ADCSOC functionality.

7.9.4.3.2 External Interrupt Switching Characteristics (1)

PARAMETER		MIN	MAX	UNIT
$t_{d(INT)}$	Delay time, INT low/high to interrupt-vector fetch		$t_{w(IQSW)} + 12t_{c(SCO)}$	cycles

(1) For an explanation of the input qualifier parameters, see Section 7.9.4.1.2.1.

7.9.4.3.3 External Interrupt Timing Diagram

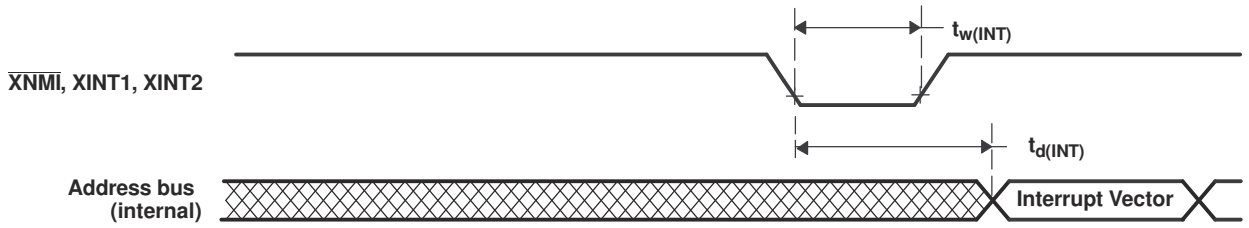

Figure 7-15. External Interrupt Timing

Copyright © 2021 Texas Instruments Incorporated

7.9.4.4 I2C Electrical Specification and Timing

7.9.4.4.1 I2C Timing

		TEST CONDITIONS	MIN	MAX	UNIT
f_{SCL}	SCL clock frequency	I2C clock module frequency is between 7 MHz and 12 MHz and I2C prescaler and clock divider registers are configured appropriately		400	kHz
v_{il}	Low level input voltage			0.3 V_{DDIO}	V
V_{ih}	High level input voltage		0.7 V_{DDIO}		V
V_{hys}	Input hysteresis		0.05 V_{DDIO}		V
V_{ol}	Low level output voltage	3-mA sink current	0	0.4	V
t_{LOW}	Low period of SCL clock	I2C clock module frequency is between 7 MHz and 12 MHz and I2C prescaler and clock divider registers are configured appropriately	1.3		µs
t_{HIGH}	High period of SCL clock	I2C clock module frequency is between 7 MHz and 12 MHz and I2C prescaler and clock divider registers are configured appropriately	0.6		µs
I_I	Input current with an input voltage between 0.1 V_{DDIO} and 0.9 V_{DDIO} MAX		–10	10	µA

Copyright © 2021 Texas Instruments Incorporated

7.9.4.5 Serial Peripheral Interface (SPI) Timing

This section contains both Master Mode and Slave Mode timing data.

7.9.4.5.1 Master Mode Timing

Section 7.9.4.5.1.1 lists the master mode timing (clock phase = 0) and Section 7.9.4.5.1.2 lists the master mode timing (clock phase = 1). Figure 7-16 and Figure 7-17 show the timing waveforms.

7.9.4.5.1.1 SPI Master Mode External Timing (Clock Phase = 0) (1) (2) (3) (4) (5)

NO.	PARAMETER		BRR EVEN		BRR ODD		UNIT
			MIN	MAX	MIN	MAX	
1	$t_{c(SPC)M}$	Cycle time, SPICLK	$4t_{c(LSPCLK)}$	$128t_{c(LSPCLK)}$	$5t_{c(LSPCLK)}$	$127t_{c(LSPCLK)}$	ns
2	$t_{w(SPC1)M}$	Pulse duration, SPICLK first pulse	$0.5t_{c(SPC)M} - 10$	$0.5t_{c(SPC)M} + 10$	$0.5t_{c(SPC)M} + 0.5t_{c(LSPCLK)} - 10$	$0.5t_{c(SPC)M} + 0.5t_{c(LSPCLK)} + 10$	ns
3	$t_{w(SPC2)M}$	Pulse duration, SPICLK second pulse	$0.5t_{c(SPC)M} - 10$	$0.5t_{c(SPC)M} + 10$	$0.5t_{c(SPC)M} - 0.5t_{c(LSPCLK)} - 10$	$0.5t_{c(SPC)M} - 0.5t_{c(LSPCLK)} + 10$	ns
4	$t_{d(SIMO)M}$	Delay time, SPICLK to SPISIMO valid		10		10	ns
5	$t_{v(SIMO)M}$	Valid time, SPISIMO valid after SPICLK	$0.5t_{c(SPC)M} - 10$		$0.5t_{c(SPC)M} - 0.5t_{c(LSPCLK)} - 10$		ns
8	$t_{su(SOMI)M}$	Setup time, SPISOMI before SPICLK	20		20		ns
9	$t_{h(SOMI)M}$	Hold time, SPISOMI valid after SPICLK	0		0		ns
23	$t_{d(SPC)M}$	Delay time, $\overline{\text{SPISTE}}$ active to SPICLK	$t_{c(SPC)M} - 10$		$0.5t_{c(SPC)M} - 0.5t_{c(LSPCLK)} - 10$		ns
24	$t_{d(STE)M}$	Delay time, SPICLK to $\overline{\text{SPISTE}}$ inactive	$0.5t_{c(SPC)M} - 10$		$0.5t_{c(SPC)M} - 0.5t_{c(LSPCLK)} - 10$		ns

(1) The MASTER / SLAVE bit (SPICTL.2) is set and the CLOCK PHASE bit (SPICTL.3) is cleared.
(2) $t_{c(SPC)}$ = SPI clock cycle time = LSPCLK/4 or LSPCLK/(SPIBRR +1)
(3) $t_{c(LCO)}$ = LSPCLK cycle time
(4) Internal clock prescalers must be adjusted such that the SPI clock speed is limited to the following SPI clock rate:
Master mode transmit 25-MHz MAX, master mode receive 12.5-MHz MAX
Slave mode transmit 12.5-MAX, slave mode receive 12.5-MHz MAX.
(5) The active edge of the SPICLK signal referenced is controlled by the clock polarity bit (SPICCR.6).

Copyright © 2021 Texas Instruments Incorporated

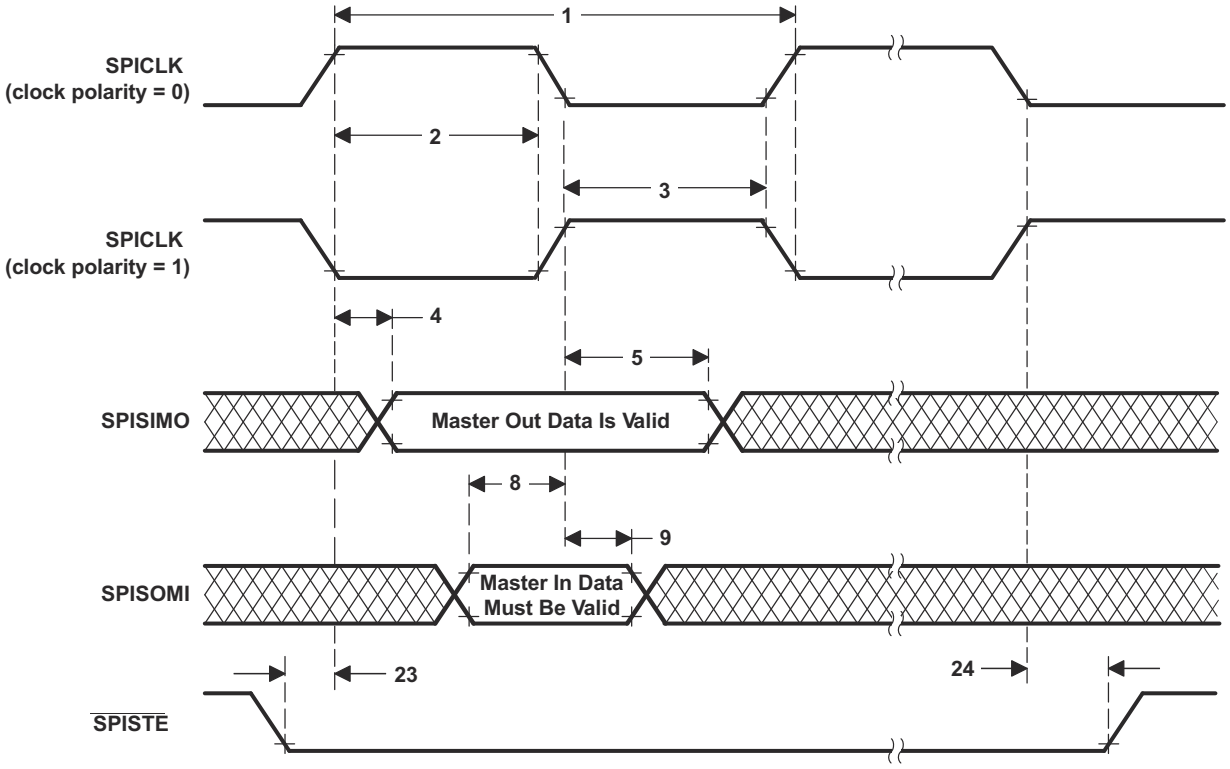

Figure 7-16. SPI Master Mode External Timing (Clock Phase = 0)

7.9.4.5.1.2 SPI Master Mode External Timing (Clock Phase = 1) (1) (2) (3) (4) (5)

NO.	PARAMETER		BRR EVEN		BRR ODD		UNIT
			MIN	MAX	MIN	MAX	
1	$t_{c(SPC)M}$	Cycle time, SPICLK	$4t_{c(LSPCLK)}$	$128t_{c(LSPCLK)}$	$5t_{c(LSPCLK)}$	$127t_{c(LSPCLK)}$	ns
2	$t_{w(SPC1)M}$	Pulse duration, SPICLK first pulse	$0.5t_{c(SPC)M} - 10$	$0.5t_{c(SPC)M} + 10$	$0.5t_{c(SPC)M} - 0.5t_{c(LSPCLK)} - 10$	$0.5t_{c(SPC)M} - 0.5t_{c(LSPCLK)} + 10$	ns
3	$t_{w(SPC2)M}$	Pulse duration, SPICLK second pulse	$0.5t_{c(SPC)M} - 10$	$0.5t_{c(SPC)M} + 10$	$0.5t_{c(SPC)M} + 0.5t_{c(LSPCLK)} - 10$	$0.5t_{c(SPC)M} + 0.5t_{c(LSPCLK)} + 10$	ns
6	$t_{d(SIMO)M}$	Delay time, SPISIMO valid to SPICLK	$0.5t_{c(SPC)M} - 10$		$0.5t_{c(SPC)M} + 0.5t_{c(LSPCLK)} - 10$		ns
7	$t_{v(SIMO)M}$	Valid time, SPISIMO valid after SPICLK	$0.5t_{c(SPC)M} - 10$		$0.5t_{c(SPC)M} - 0.5t_{c(LSPCLK)} - 10$		ns
10	$t_{su(SOMI)M}$	Setup time, SPISOMI before SPICLK	20		20		ns
11	$t_{h(SOMI)M}$	Hold time, SPISOMI valid after SPICLK	0		0		ns
23	$t_{d(SPC)M}$	Delay time, $\overline{\text{SPISTE}}$ active to SPICLK	$t_{c(SPC)} - 10$		$t_{c(SPC)} - 10$		ns
24	$t_{d(STE)M}$	Delay time, SPICLK to $\overline{\text{SPISTE}}$ inactive	$0.5t_{c(SPC)} - 10$		$0.5t_{c(SPC)} - 0.5t_{c(LSPCLK)} - 10$		ns

(1) The MASTER/SLAVE bit (SPICTL.2) is set and the CLOCK PHASE bit (SPICTL.3) is set.
(2) $t_{c(SPC)}$ = SPI clock cycle time = LSPCLK/4 or LSPCLK/(SPIBRR + 1)
(3) Internal clock prescalers must be adjusted such that the SPI clock speed is limited to the following SPI clock rate:
Master mode transmit 25 MHz MAX, master mode receive 12.5 MHz MAX
Slave mode transmit 12.5 MHz MAX, slave mode receive 12.5 MHz MAX.
(4) $t_{c(LCO)}$ = LSPCLK cycle time
(5) The active edge of the SPICLK signal referenced is controlled by the CLOCK POLARITY bit (SPICCR.6).

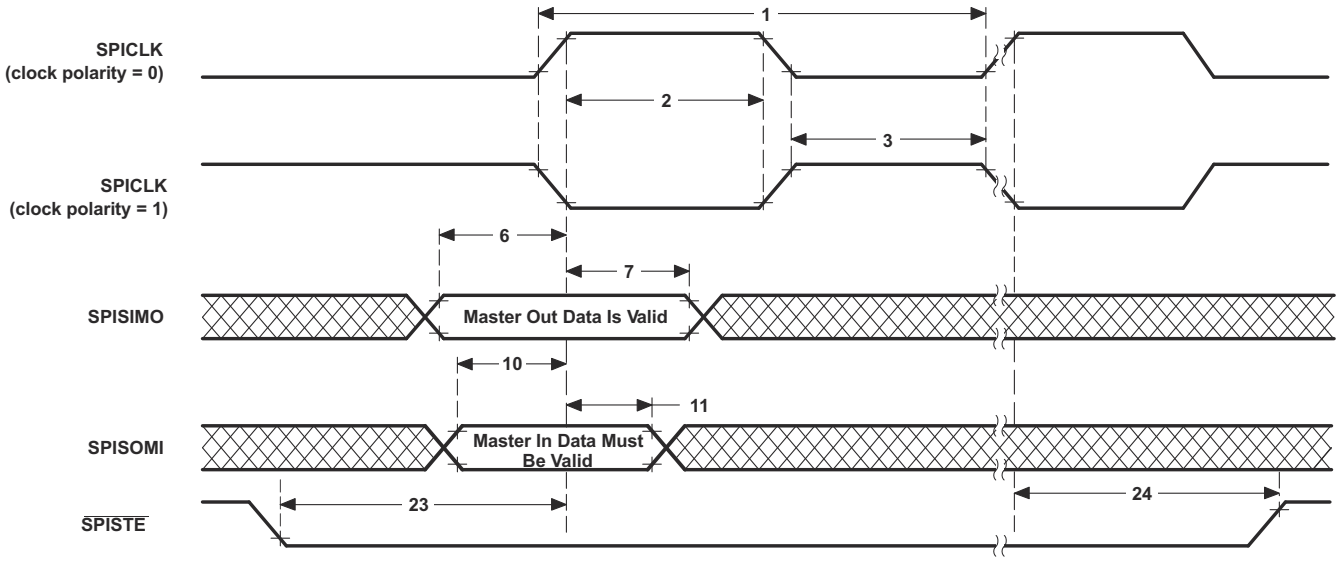

Figure 7-17. SPI Master Mode External Timing (Clock Phase = 1)

Copyright © 2021 Texas Instruments Incorporated

7.9.4.5.2 Slave Mode Timing

Section 7.9.4.5.2.1 lists the slave mode timing (clock phase = 0) and Section 7.9.4.5.2.2 lists the slave mode timing (clock phase = 1). Figure 7-18 and Figure 7-19 show the timing waveforms.

7.9.4.5.2.1 SPI Slave Mode External Timing (Clock Phase = 0) (1) (2) (4) (3) (5)

NO.	PARAMETER		MIN	MAX	UNIT
12	$t_{c(SPC)S}$	Cycle time, SPICLK	$4t_{c(SYSCLK)}$		ns
13	$t_{w(SPC1)S}$	Pulse duration, SPICLK first pulse	$2t_{c(SYSCLK)} - 1$		ns
14	$t_{w(SPC2)S}$	Pulse duration, SPICLK second pulse	$2t_{c(SYSCLK)} - 1$		ns
15	$t_{d(SOMI)S}$	Delay time, SPICLK to SPISOMI valid		20	ns
16	$t_{v(SOMI)S}$	Valid time, SPISOMI data valid after SPICLK	0		ns
19	$t_{su(SIMO)S}$	Setup time, SPISIMO valid before SPICLK	$1.5t_{c(SYSCLK)}$		ns
20	$t_{h(SIMO)S}$	Hold time, SPISIMO data valid after SPICLK	$1.5t_{c(SYSCLK)}$		ns
25	$t_{su(STE)S}$	Setup time, $\overline{\text{SPISTE}}$ active before SPICLK	$1.5t_{c(SYSCLK)}$		ns
26	$t_{h(STE)S}$	Hold time, $\overline{\text{SPISTE}}$ inactive after SPICLK	$1.5t_{c(SYSCLK)}$		ns

(1) The MASTER / SLAVE bit (SPICTL.2) is cleared and the CLOCK PHASE bit (SPICTL.3) is cleared.
(2) $t_{c(SPC)}$ = SPI clock cycle time = LSPCLK/4 or LSPCLK/(SPIBRR + 1)
(3) $t_{c(LCO)}$ = LSPCLK cycle time
(4) Internal clock prescalers must be adjusted such that the SPI clock speed is limited to the following SPI clock rate:
Master mode transmit 25-MHz MAX, master mode receive 12.5-MHz MAX
Slave mode transmit 12.5-MHz MAX, slave mode receive 12.5-MHz MAX.
(5) The active edge of the SPICLK signal referenced is controlled by the CLOCK POLARITY bit (SPICCR.6).

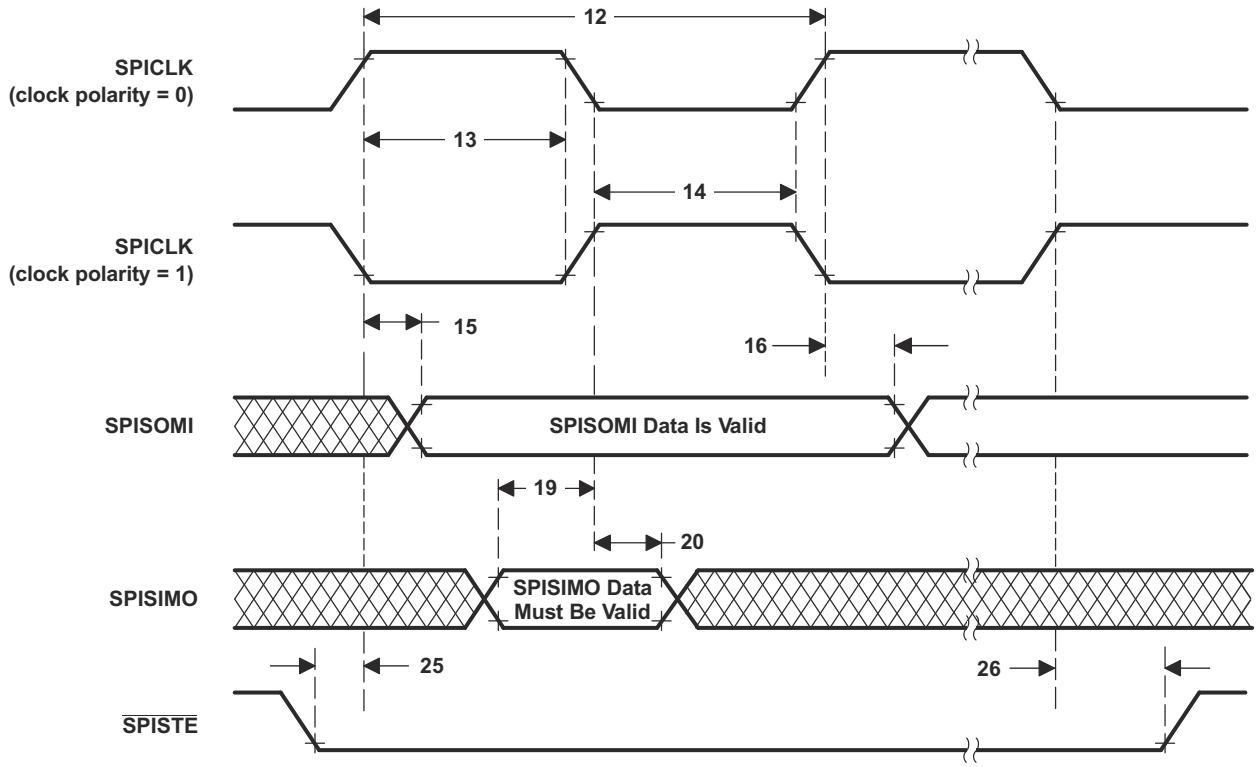

Figure 7-18. SPI Slave Mode External Timing (Clock Phase = 0)

7.9.4.5.2.2 SPI Slave Mode External Timing (Clock Phase = 1) (1) (2) (3) (4)

NO.	PARAMETER		MIN	MAX	UNIT
12	$t_{c(SPC)S}$	Cycle time, SPICLK	$4t_{c(SYSCLK)}$		ns
13	$t_{w(SPC1)S}$	Pulse duration, SPICLK first pulse	$2t_{c(SYSCLK)} - 1$		ns
14	$t_{w(SPC2)S}$	Pulse duration, SPICLK second pulse	$2t_{c(SYSCLK)} - 1$		ns
17	$t_{d(SOMI)S}$	Delay time, SPICLK to SPISOMI valid		20	ns
18	$t_{v(SOMI)S}$	Valid time, SPISOMI data valid after SPICLK	0		ns
21	$t_{su(SIMO)S}$	Setup time, SPISIMO valid before SPICLK	$1.5t_{c(SYSCLK)}$		ns
22	$t_{h(SIMO)S}$	Hold time, SPISIMO data valid after SPICLK	$1.5t_{c(SYSCLK)}$		ns
25	$t_{su(STE)S}$	Setup time, $\overline{\text{SPISTE}}$ active before SPICLK	$1.5t_{c(SYSCLK)}$		ns
26	$t_{h(STE)S}$	Hold time, $\overline{\text{SPISTE}}$ inactive after SPICLK	$1.5t_{c(SYSCLK)}$		ns

(1) The MASTER / SLAVE bit (SPICTL.2) is cleared and the CLOCK PHASE bit (SPICTL.3) is cleared.
(2) $t_{c(SPC)}$ = SPI clock cycle time = LSPCLK/4 or LSPCLK/(SPIBRR + 1)
(3) Internal clock prescalers must be adjusted such that the SPI clock speed is limited to the following SPI clock rate:
Master mode transmit 25-MHz MAX, master mode receive 12.5-MHz MAX
Slave mode transmit 12.5-MHz MAX, slave mode receive 12.5-MHz MAX.
(4) The active edge of the SPICLK signal referenced is controlled by the CLOCK POLARITY bit (SPICCR.6).

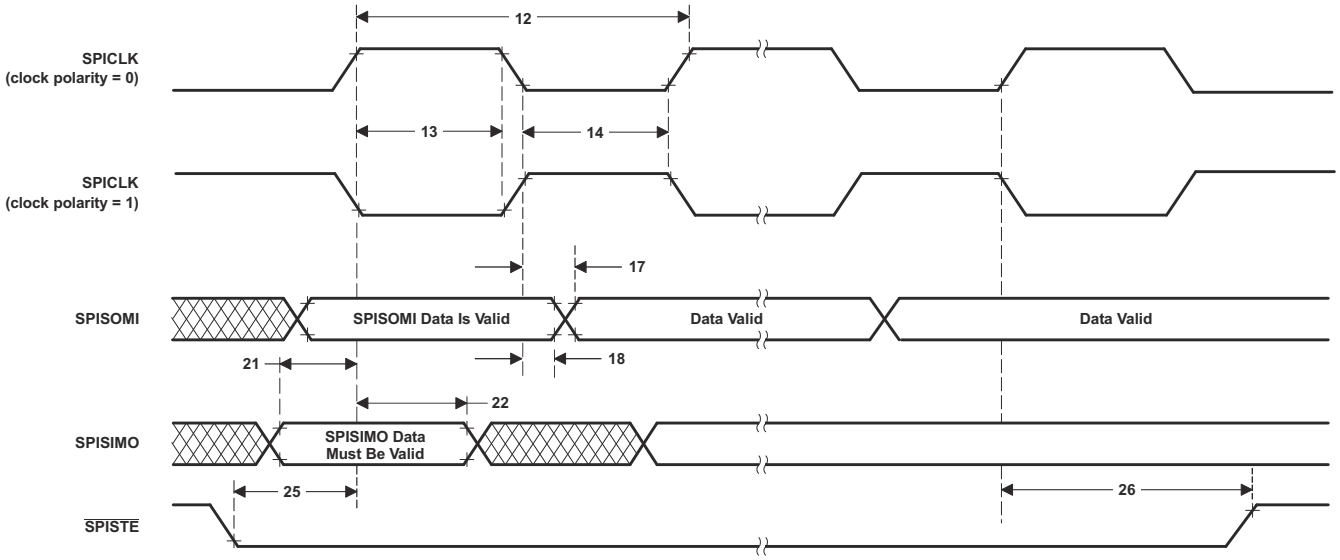

Figure 7-19. SPI Slave Mode External Timing (Clock Phase = 1)

Copyright © 2021 Texas Instruments Incorporated

7.9.4.6 Multichannel Buffered Serial Port (McBSP) Timing

7.9.4.6.1 McBSP Transmit and Receive Timing

7.9.4.6.1.1 McBSP Timing Requirements (1) (2)

NO.				MIN	MAX	UNIT
		McBSP module clock (CLKG, CLKX, CLKR) range		1		kHz
					40 (3)	MHz
		McBSP module cycle time (CLKG, CLKX, CLKR) range		25		ns
					1	ms
M11	$t_{c(CKRX)}$	Cycle time, CLKR/X	CLKR/X ext	2P		ns
M12	$t_{w(CKRX)}$	Pulse duration, CLKR/X high or CLKR/X low	CLKR/X ext	P – 4		ns
M13	$t_{r(CKRX)}$	Rise time, CLKR/X	CLKR/X ext		4	ns
M14	$t_{f(CKRX)}$	Fall time, CLKR/X	CLKR/X ext		4	ns
M15	$t_{su(FRH-CKRL)}$	Setup time, external FSR high before CLKR low	CLKR int	20		ns
			CLKR ext	2		
M16	$t_{h(CKRL-FRH)}$	Hold time, external FSR high after CLKR low	CLKR int	0		ns
			CLKR ext	6		
M17	$t_{su(DRV-CKRL)}$	Setup time, DR valid before CLKR low	CLKR int	20		ns
			CLKR ext	2		
M18	$t_{h(CKRL-DRV)}$	Hold time, DR valid after CLKR low	CLKR int	0		ns
			CLKR ext	6		
M19	$t_{su(FXH-CKXL)}$	Setup time, external FSX high before CLKX low	CLKX int	20		ns
			CLKX ext	2		
M20	$t_{h(CKXL-FXH)}$	Hold time, external FSX high after CLKX low	CLKX int	0		ns
			CLKX ext	6		

(1) Polarity bits CLKRP = CLKXP = FSRP = FSXP = 0. If the polarity of any of the signals is inverted, then the timing references of that signal are also inverted.

(2) 2P = 1/CLKG in ns. CLKG is the output of sample rate generator mux. CLKG = $\frac{\text{CLKSRG}}{(1 + \text{CLKGDV})}$ CLKSRG can be LSPCLK, CLKX, CLKR as source. CLKSRG ≤ (SYSCLKOUT/2). McBSP performance is limited by I/O buffer switching speed.

(3) Internal clock prescalers must be adjusted such that the McBSP clock (CLKG, CLKX, CLKR) speeds are not greater than the I/O buffer speed limit (40 MHz).

Copyright © 2021 Texas Instruments Incorporated

7.9.4.6.1.2 McBSP Switching Characteristics (1) (2)

NO.	PARAMETER				MIN	MAX	UNIT
M1	$t_{c(CKRX)}$	Cycle time, CLKR/X		CLKR/X int	2P		ns
M2	$t_{w(CKRXH)}$	Pulse duration, CLKR/X high		CLKR/X int	D – 2 (3)	D + 2 (3)	ns
M3	$t_{w(CKRXL)}$	Pulse duration, CLKR/X low		CLKR/X int	C – 2 (3)	C + 2 (3)	ns
M4	$t_{d(CKRH-FRV)}$	Delay time, CLKR high to internal FSR valid		CLKR int	0	4	ns
				CLKR ext	3	20	
M5	$t_{d(CKXH-FXV)}$	Delay time, CLKX high to internal FSX valid		CLKX int	0	4	ns
				CLKX ext	3	20	
M6	$t_{dis(CKXH-DXHZ)}$	Disable time, CLKX high to DX high impedance following last data bit		CLKX int		8	ns
				CLKX ext		14	
M7	$t_{d(CKXH-DXV)}$	Delay time, CLKX high to DX valid. This applies to all bits except the first bit transmitted.		CLKX int		4	ns
				CLKX ext		20	
		Delay time, CLKX high to DX valid	DXENA = 0	CLKX int		4	
				CLKX ext		20	
		Only applies to first bit transmitted when in Data Delay 1 or 2 (XDATDLY=01b or 10b) modes	DXENA = 1	CLKX int		P + 4	
				CLKX ext		P + 20	
M8	$t_{en(CKXH-DX)}$	Enable time, CLKX high to DX driven	DXENA = 0	CLKX int	0		ns
				CLKX ext	10		
		Only applies to first bit transmitted when in Data Delay 1 or 2 (XDATDLY=01b or 10b) modes	DXENA = 1	CLKX int	P		
				CLKX ext	P + 10		
M9	$t_{d(FXH-DXV)}$	Delay time, FSX high to DX valid	DXENA = 0	FSX int		4	ns
				FSX ext		16	
		Only applies to first bit transmitted when in Data Delay 0 (XDATDLY=00b) mode.	DXENA = 1	FSX int		P + 4	
				FSX ext		P + 16	
M10	$t_{en(FXH-DX)}$	Enable time, FSX high to DX driven	DXENA = 0	FSX int	0		ns
				FSX ext	6		
		Only applies to first bit transmitted when in Data Delay 0 (XDATDLY=00b) mode	DXENA = 1	FSX int	P		
				FSX ext	P + 6		

(1) Polarity bits CLKRP = CLKXP = FSRP = FSXP = 0. If the polarity of any of the signals is inverted, then the timing references of that signal are also inverted.
(2) 2P = 1/CLKG in ns.
(3) C = CLKRX low pulse width = P
D = CLKRX high pulse width = P

Copyright © 2021 Texas Instruments Incorporated

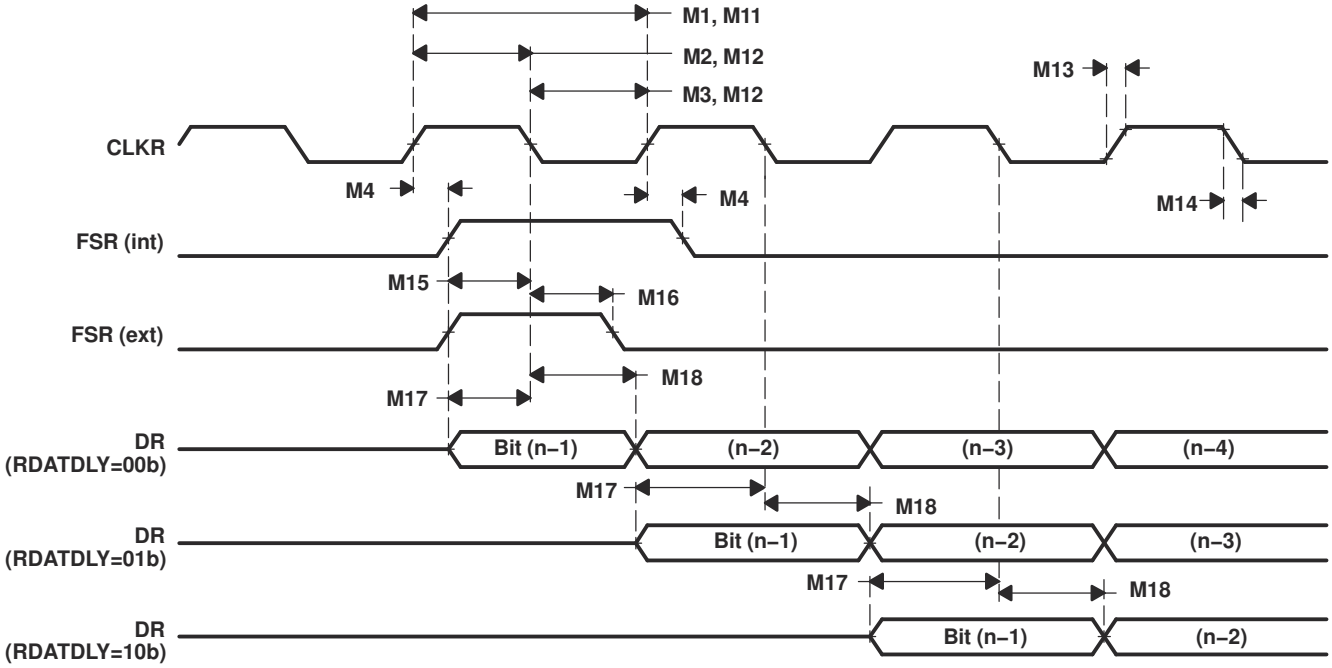

Figure 7-20. McBSP Receive Timing

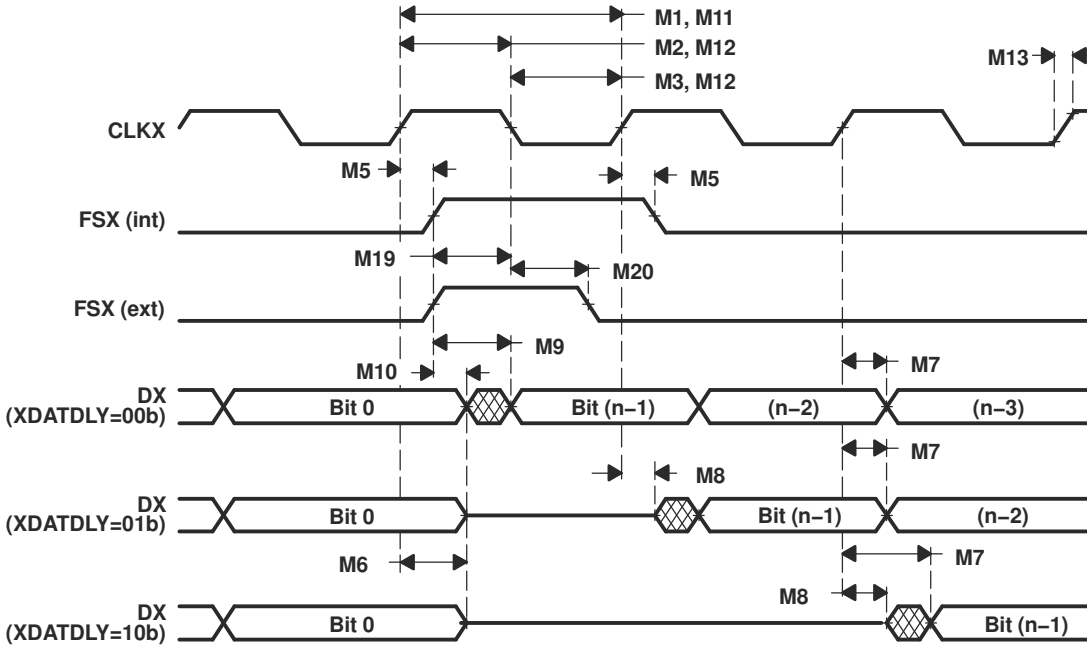

Figure 7-21. McBSP Transmit Timing

7.9.4.6.2 McBSP as SPI Master or Slave Timing

7.9.4.6.2.1 McBSP as SPI Master or Slave Timing Requirements (CLKSTP = 10b, CLKXP = 0) (1)

NO.			MASTER		SLAVE		UNIT
			MIN	MAX	MIN	MAX	
M30	$t_{su(DRV-CKXL)}$	Setup time, DR valid before CLKX low	30		8P – 10		ns
M31	$t_{h(CKXL-DRV)}$	Hold time, DR valid after CLKX low	1		8P – 10		ns
M32	$t_{su(BFXL-CKXH)}$	Setup time, FSX low before CLKX high			8P + 10		ns
M33	$t_{c(CKX)}$	Cycle timez, CLKX	2P(2)		16P		ns

(1) For all SPI slave modes, CLKX must be a minimum of 8 CLKG cycles. Furthermore, CLKG should be LSPCLK/2 by setting CLKSM = CLKGDV = 1.

(2) 2P = 1/CLKG

7.9.4.6.2.2 McBSP as SPI Master or Slave Switching Characteristics (CLKSTP = 10b, CLKXP = 0)

NO.	PARAMETER		MASTER		SLAVE		UNIT
			MIN	MAX	MIN	MAX	
M24	$t_{h(CKXL-FXL)}$	Hold time, FSX low after CLKX low	2P(1)				ns
M25	$t_{d(FXL-CKXH)}$	Delay time, FSX low to CLKX high	P				ns
M26	$t_{d(CLKXH-DXV)}$	Delay time, CLKX low to DX valid	–2	0	3P + 6	5P + 20	ns
M28	$t_{dis(FXH-DXHZ)}$	Disable time, DX high impedance following last data bit from FSX high	6		6P + 6		ns
M29	$t_{d(FXL-DXV)}$	Delay time, FSX low to DX valid	6		4P + 6		ns

(1) 2P = 1/CLKG

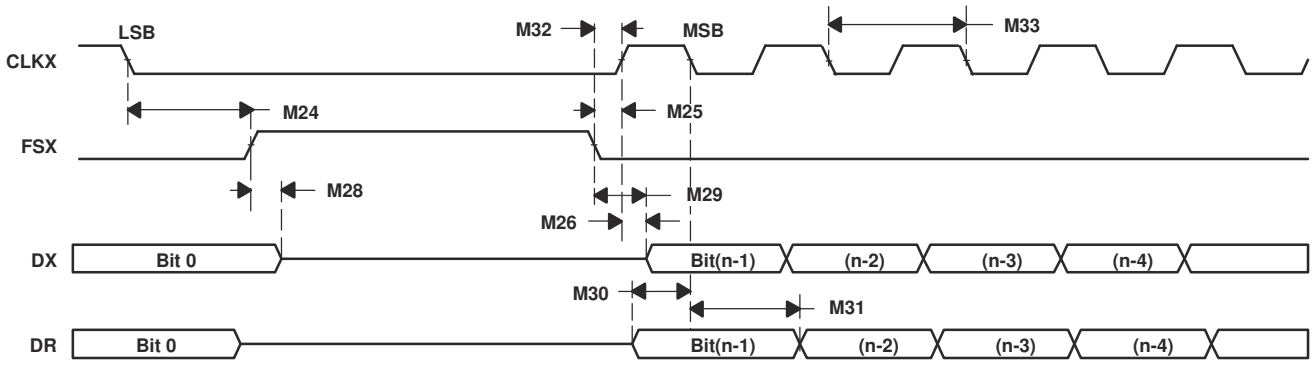

Figure 7-22. McBSP Timing as SPI Master or Slave: CLKSTP = 10b, CLKXP = 0

Copyright © 2021 Texas Instruments Incorporated

7.9.4.6.2.3 McBSP as SPI Master or Slave Timing Requirements (CLKSTP = 11b, CLKXP = 0) (1)

NO.			MASTER		SLAVE		UNIT
			MIN	MAX	MIN	MAX	
M39	$t_{su(DRV-CKXH)}$	Setup time, DR valid before CLKX high	30		8P – 10		ns
M40	$t_{h(CKXH-DRV)}$	Hold time, DR valid after CLKX high	1		8P – 10		ns
M41	$t_{su(FXL-CKXH)}$	Setup time, FSX low before CLKX high			16P + 10		ns
M42	$t_{c(CKX)}$	Cycle time, CLKX	2P(2)		16P		ns

(1) For all SPI slave modes, CLKX must be a minimum of 8 CLKG cycles. Furthermore, CLKG should be LSPCLK/2 by setting CLKSM = CLKGDV = 1.
(2) 2P = 1/CLKG

7.9.4.6.2.4 McBSP as SPI Master or Slave Switching Characteristics (CLKSTP = 11b, CLKXP = 0)

NO.	PARAMETER		MASTER		SLAVE		UNIT
			MIN	MAX	MIN	MAX	
M34	$t_{h(CKXL-FXL)}$	Hold time, FSX low after CLKX low	P				ns
M35	$t_{d(FXL-CKXH)}$	Delay time, FSX low to CLKX high	2P(1)				ns
M36	$t_{d(CLKXL-DXV)}$	Delay time, CLKX low to DX valid	–2	0	3P + 6	5P + 20	ns
M37	$t_{dis(CKXL-DXHZ)}$	Disable time, DX high impedance following last data bit from CLKX low	P + 6		7P + 6		ns
M38	$t_{d(FXL-DXV)}$	Delay time, FSX low to DX valid	6		4P + 6		ns

(1) 2P = 1/CLKG

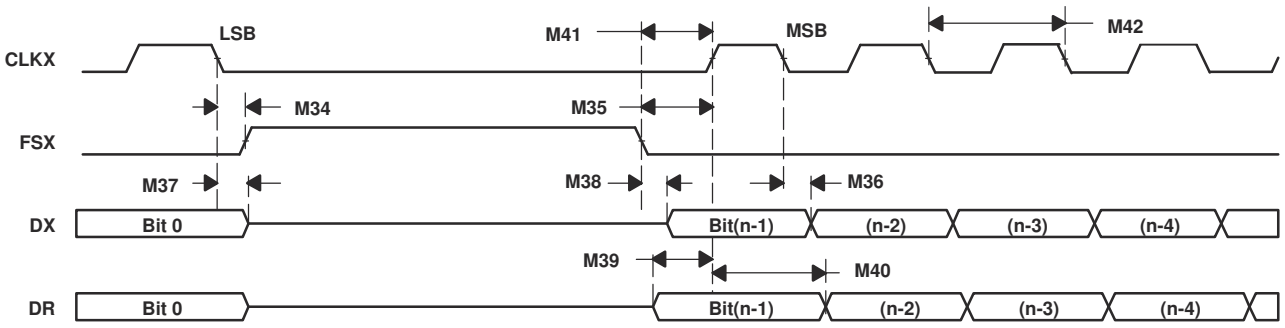

Figure 7-23. McBSP Timing as SPI Master or Slave: CLKSTP = 11b, CLKXP = 0

7.9.4.6.2.5 McBSP as SPI Master or Slave Timing Requirements (CLKSTP = 10b, CLKXP = 1) (1)

NO.			MASTER		SLAVE		UNIT
			MIN	MAX	MIN	MAX	
M49	$t_{su(DRV-CKXH)}$	Setup time, DR valid before CLKX high	30		8P – 10		ns
M50	$t_{h(CKXH-DRV)}$	Hold time, DR valid after CLKX high	1		8P – 10		ns
M51	$t_{su(FXL-CKXL)}$	Setup time, FSX low before CLKX low			8P + 10		ns
M52	$t_{c(CKX)}$	Cycle time, CLKX	2P(2)		16P		ns

(1) For all SPI slave modes, CLKX must be a minimum of 8 CLKG cycles. Furthermore, CLKG should be LSPCLK/2 by setting CLKSM = CLKGDV = 1.
(2) 2P = 1/CLKG

7.9.4.6.2.6 McBSP as SPI Master or Slave Switching Characteristics (CLKSTP = 10b, CLKXP = 1)

NO.	PARAMETER		MASTER		SLAVE		UNIT
			MIN	MAX	MIN	MAX	
M43	$t_{h(CKXH-FXL)}$	Hold time, FSX low after CLKX high	2P(1)				ns
M44	$t_{d(FXL-CKXL)}$	Delay time, FSX low to CLKX low	P				ns
M45	$t_{d(CLKXL-DXV)}$	Delay time, CLKX low to DX valid	–2	0	3P + 6	5P + 20	ns
M47	$t_{dis(FXH-DXHZ)}$	Disable time, DX high impedance following last data bit from FSX high	6		6P + 6		ns
M48	$t_{d(FXL-DXV)}$	Delay time, FSX low to DX valid	6		4P + 6		ns

(1) 2P = 1/CLKG

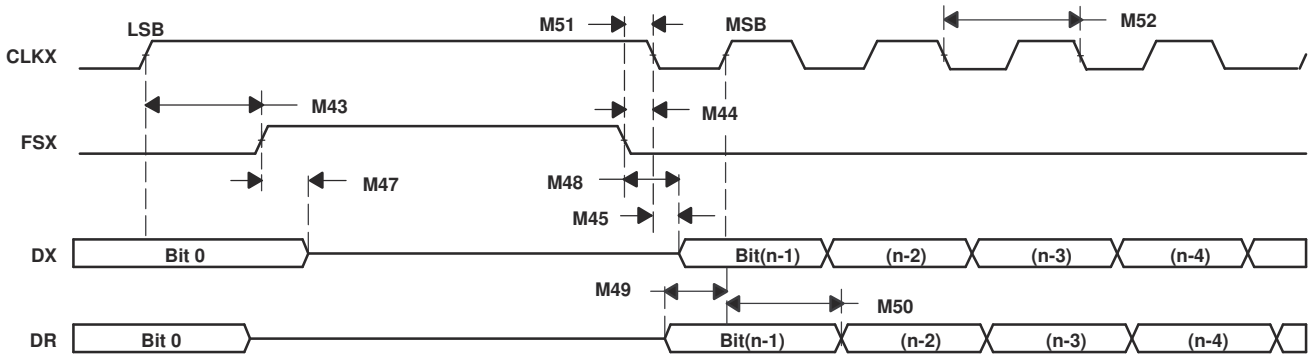

Figure 7-24. McBSP Timing as SPI Master or Slave: CLKSTP = 10b, CLKXP = 1

Copyright © 2021 Texas Instruments Incorporated

7.9.4.6.2.7 McBSP as SPI Master or Slave Timing Requirements (CLKSTP = 11b, CLKXP = 1) (1)

NO.			MASTER		SLAVE		UNIT
			MIN	MAX	MIN	MAX	
M58	$t_{su(DRV-CKXL)}$	Setup time, DR valid before CLKX low	30		8P – 10		ns
M59	$t_{h(CKXL-DRV)}$	Hold time, DR valid after CLKX low	1		8P – 10		ns
M60	$t_{su(FXL-CKXL)}$	Setup time, FSX low before CLKX low			16P + 10		ns
M61	$t_{c(CKX)}$	Cycle time, CLKX	2P(2)		16P		ns

(1) For all SPI slave modes, CLKX must be a minimum of 8 CLKG cycles. Furthermore, CLKG should be LSPCLK/2 by setting CLKSM = CLKGDV = 1.
(2) 2P = 1/CLKG

7.9.4.6.2.8 McBSP as SPI Master or Slave Switching Characteristics (CLKSTP = 11b, CLKXP = 1) (1)

NO.	PARAMETER		MASTER(2)		SLAVE		UNIT
			MIN	MAX	MIN	MAX	
M53	$t_{h(CKXH-FXL)}$	Hold time, FSX low after CLKX high	P				ns
M54	$t_{d(FXL-CKXL)}$	Delay time, FSX low to CLKX low	2P(1)				ns
M55	$t_{d(CLKXH-DXV)}$	Delay time, CLKX high to DX valid	–2	0	3P + 6	5P + 20	ns
M56	$t_{dis(CKXH-DXHZ)}$	Disable time, DX high impedance following last data bit from CLKX high	P + 6		7P + 6		ns
M57	$t_{d(FXL-DXV)}$	Delay time, FSX low to DX valid	6		4P + 6		ns

(1) 2P = 1/CLKG
(2) C = CLKX low pulse width = P
D = CLKX high pulse width = P

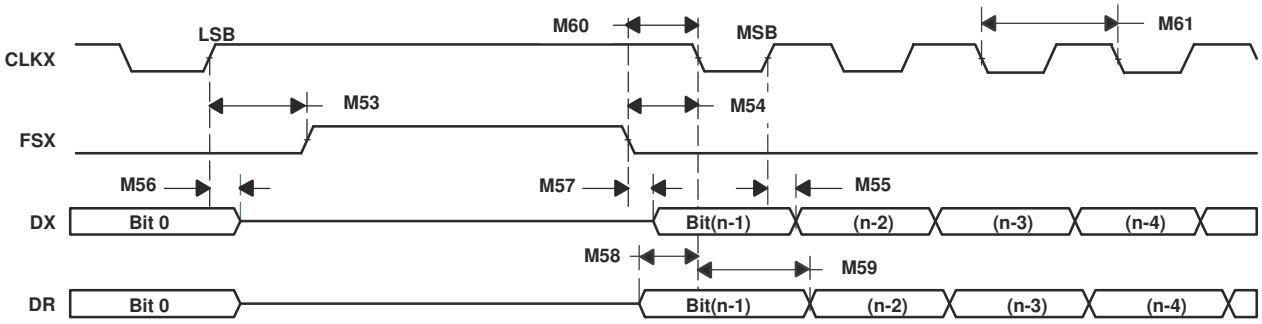

Figure 7-25. McBSP Timing as SPI Master or Slave: CLKSTP = 11b, CLKXP = 1

Copyright © 2021 Texas Instruments Incorporated

7.9.5 Emulator Connection Without Signal Buffering for the MCU

Figure 7-26 shows the connection between the MCU and JTAG header for a single-processor configuration. If the distance between the JTAG header and the MCU is greater than 6 inches, the emulation signals must be buffered. If the distance is less than 6 inches, buffering is typically not needed. Figure 7-26 shows the simpler, no-buffering situation. For the pullup/pulldown resistor values, see the pin description section. For details on buffering JTAG signals and multiple processor connections, see the *TMS320F/C24x DSP controllers CPU and instruction set reference guide*.

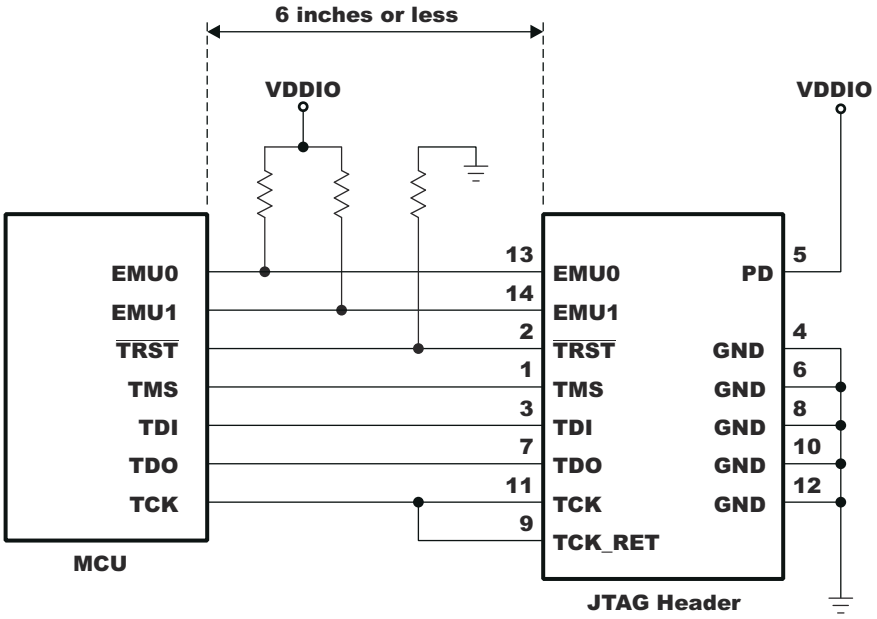

Figure 7-26. Emulator Connection Without Signal Buffering for the MCU

Copyright © 2021 Texas Instruments Incorporated

7.9.6 External Interface (XINTF) Timing

Each XINTF access consists of three parts: Lead, Active, and Trail. The user configures the Lead/Active/Trail wait states in the XTIMING registers. There is one XTIMING register for each XINTF zone. Table 7-2 shows the relationship between the parameters configured in the XTIMING register and the duration of the pulse in terms of XTIMCLK cycles.

Table 7-2. Relationship Between Parameters Configured in XTIMING and Duration of Pulse

DESCRIPTION		DURATION (ns)(1) (2)	
		X2TIMING = 0	X2TIMING = 1
LR	Lead period, read access	XRDLEAD × $t_{c(XTIM)}$	(XRDLEAD × 2) × $t_{c(XTIM)}$
AR	Active period, read access	(XRDACTIVE + WS + 1) × $t_{c(XTIM)}$	(XRDACTIVE × 2 + WS + 1) × $t_{c(XTIM)}$
TR	Trail period, read access	XRDTRAIL × $t_{c(XTIM)}$	(XRDTRAIL × 2) × $t_{c(XTIM)}$
LW	Lead period, write access	XWRLEAD × $t_{c(XTIM)}$	(XWRLEAD × 2) × $t_{c(XTIM)}$
AW	Active period, write access	(XWRACTIVE + WS + 1) × $t_{c(XTIM)}$	(XWRACTIVE × 2 + WS + 1) × $t_{c(XTIM)}$
TW	Trail period, write access	XWRTRAIL × $t_{c(XTIM)}$	(XWRTRAIL × 2) × $t_{c(XTIM)}$

(1) $t_{c(XTIM)}$ − Cycle time, XTIMCLK
(2) WS refers to the number of wait states inserted by hardware when using XREADY. If the zone is configured to ignore XREADY (USEREADY = 0), then WS = 0.

Minimum wait-state requirements must be met when configuring each zone's XTIMING register. These requirements are in addition to any timing requirements as specified by that device's data sheet. No internal device hardware is included to detect illegal settings.

7.9.6.1 USEREADY = 0

If the XREADY signal is ignored (USEREADY = 0), then:

Lead: LR ≥ 2 × $t_{c(XTIM)}$
LW ≥ 3 × $t_{c(XTIM)}$
Active: AR ≥ 6 × $t_{c(XTIM)}$
AW ≥ 1 × $t_{c(XTIM)}$
Trail: TW ≥ 3 × $t_{c(XTIM)}$

These requirements result in the following XTIMING register configuration restrictions:

XRDLEAD	XRDACTIVE	XRDTRAIL	XWRLEAD	XWRACTIVE	XWRTRAIL	X2TIMING
≥ 2	≥ 6	≥ 0	≥ 3(2)	≥ 1	≥ 3(2)	0(1)

(1) If X2TIMCLK is enabled, specified Lead, Active, and Trail restrictions can be divided by 2 for values with even numbers.
(2) Lead and trail write must be at least 7.5 ns.

Examples of valid and invalid timing when not sampling XREADY:

	XRDLEAD	XRDACTIVE	XRDTRAIL	XWRLEAD	XWRACTIVE	XWRTRAIL	X2TIMING
Invalid(1)	0	0	0	0	0	0	0, 1
Valid(2)	2	6	0	3	1	3	0(3)

(1) No hardware to detect illegal XTIMING configurations
(2) Based on 300-MHz system clock speed.
(3) If X2TIMCLK is enabled, specified Lead, Active, and Trail restrictions can be divided by 2 for values with even numbers.

Copyright © 2021 Texas Instruments Incorporated

7.9.6.2 Synchronous Mode (USEREADY = 1, READYMODE = 0)

If the XREADY signal is sampled in the synchronous mode (USEREADY = 1, READYMODE = 0), then:

1 Lead: $LR \geq 2 \times t_{c(XTIM)}$
$LW \geq 3 \times t_{c(XTIM)}$
2 Active: $AR \geq 6 \times t_{c(XTIM)}$
$AW \geq 2 \times t_{c(XTIM)}$
3 Trail: $TW \geq 3 \times t_{c(XTIM)}$

Note

Restriction does not include external hardware wait states.

These requirements result in the following XTIMING register configuration restrictions (based on 300-MHz system clock speed):

XRDLEAD	XRDACTIVE	XRDTRAIL	XWRLEAD	XWRACTIVE	XWRTRAIL	X2TIMING
≥ 2	≥ 6	≥ 0	≥ 3(2)	≥ 2	≥ 3(2)	0(1)

(1) If X2TIMCLK is enabled, specified Lead, Active, and Trail restrictions can be divided by 2 for values with even numbers.
(2) Lead and trail write must be at least 7.5 ns.

Examples of valid and invalid timing when using synchronous XREADY:

	XRDLEAD	XRDACTIVE	XRDTRAIL	XWRLEAD	XWRACTIVE	XWRTRAIL	X2TIMING
Invalid(1)	0	0	0	0	0	0	0, 1
Invalid(1)	1	0	0	1	0	0	0, 1
Valid(2)	2	6	0	3	2	3	0(3)

(1) No hardware to detect illegal XTIMING configurations
(2) Based on 300-MHz system clock speed
(3) If X2TIMCLK is enabled, specified Lead, Active, and Trail restrictions can be divided by 2 for values with even numbers.

Copyright © 2021 Texas Instruments Incorporated

7.9.6.3 Asynchronous Mode (USEREADY = 1, READYMODE = 1)

If the XREADY signal is sampled in the asynchronous mode (USEREADY = 1, READYMODE = 1), then:

1 Lead: LR ≥ 2 × $t_{c(XTIM)}$
LW ≥ 3 × $t_{c(XTIM)}$
2 Active: AR ≥ 6 × $t_{c(XTIM)}$
AW ≥ 4 × $t_{c(XTIM)}$
3 Trail: TW ≥ 3 × $t_{c(XTIM)}$

Note

Restrictions do not include external hardware wait states.

These requirements result in the following XTIMING register configuration restrictions (based on 300-MHz system clock speed):

XRDLEAD	XRDACTIVE	XRDTRAIL	XWRLEAD	XWRACTIVE	XWRTRAIL	X2TIMING
≥ 2	≥ 6	0	≥ 3(2)	≥ 4	≥3(2)	0(1)

(1) If X2TIMCLK is enabled, specified Lead, Active, and Trail restrictions can be divided by 2 for values with even numbers.
(2) Lead and trail write must be at least 7.5 ns.

Examples of valid and invalid timing when using asynchronous XREADY:

	XRDLEAD	XRDACTIVE	XRDTRAIL	XWRLEAD	XWRACTIVE	XWRTRAIL	X2TIMING
Invalid(1)	0	0	0	0	0	0	0, 1
Invalid(1)	1	0	0	1	0	0	0, 1
Invalid(1)	1	1	0	1	1	0	0
Valid(2)	2	6	0	3	4	3	0(3)

(1) No hardware to detect illegal XTIMING configurations
(2) Based on 300-MHz system clock speed
(3) If X2TIMCLK is enabled, specified Lead, Active, and Trail restrictions can be divided by 2 for values with even numbers.

Copyright © 2021 Texas Instruments Incorporated

Unless otherwise specified, all XINTF timing is applicable for the clock configurations listed in Table 7-3.

Table 7-3. XINTF Clock Configurations for SYSCLKOUT = 300 MHz

MODE	SYSCLKOUT	XTIMCLK	XCLKOUT[1]
1		SYSCLKOUT	SYSCLKOUT
Example:	300 MHz	300 MHz	300 MHz
2		SYSCLKOUT	1/2 SYSCLKOUT
Example:	300 MHz	300 MHz	150 MHz
3		SYSCLKOUT	1/2 SYSCLKOUT
Example:	300 MHz	300 MHz	150 MHz
4		SYSCLKOUT	1/4 SYSCLKOUT
Example:	300 MHz	300 MHz	75 MHz
5		1/2 SYSCLKOUT	1/2 SYSCLKOUT
Example:	300 MHz	150 MHz	150 MHz
6		1/2 SYSCLKOUT	1/4 SYSCLKOUT
Example:	300 MHz	150 MHz	75 MHz
7		1/2 SYSCLKOUT	1/4 SYSCLKOUT
Example:	300 MHz	150 MHz	75 MHz
8		1/2 SYSCLKOUT	1/8 SYSCLKOUT
Example:	300 MHz	150 MHz	37.5 MHz

(1) The XCLKOUT signal is limited to a maximum frequency of 75 MHz.

The relationship between SYSCLKOUT and XTIMCLK is shown in Figure 7-27.

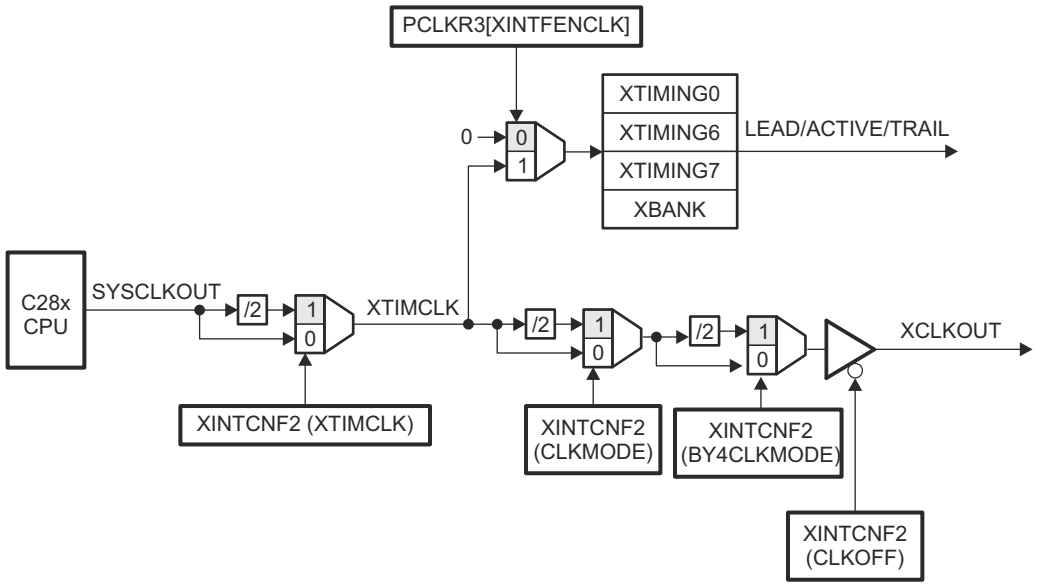

Figure 7-27. Relationship Between SYSCLKOUT and XTIMCLK

Copyright © 2021 Texas Instruments Incorporated

7.9.6.4 XINTF Signal Alignment to XCLKOUT

For each XINTF access, the number of lead, active, and trail cycles is based on the internal clock XTIMCLK. Strobes such as $\overline{\text{XRD}}$, $\overline{\text{XWE0}}$, $\overline{\text{XWE1}}$, and zone chip-select ($\overline{\text{XZCS}}$) change state in relationship to the rising edge of XTIMCLK. The external clock, XCLKOUT, can be configured to be equal to, one-half, or one-fourth the frequency of XTIMCLK.

For the case where XCLKOUT = XTIMCLK, all of the XINTF strobes will change state with respect to the rising edge of XCLKOUT. For the case where XCLKOUT = one-half or one-fourth XTIMCLK, some strobes will change state either on the rising edge of XCLKOUT or the falling edge of XCLKOUT. In the XINTF timing tables, the notation XCOHL is used to indicate that the parameter is with respect to either case; XCLKOUT rising edge (high) or XCLKOUT falling edge (low). If the parameter is always with respect to the rising edge of XCLKOUT, the notation XCOH is used.

For the case where XCLKOUT = one-half XTIMCLK, the XCLKOUT edge with which the change will be aligned can be determined based on the number of XTIMCLK cycles from the start of the access to the point at which the signal changes. If this number of XTIMCLK cycles is even, the alignment will be with respect to the rising edge of XCLKOUT. If this number is odd, then the signal will change with respect to the falling edge of XCLKOUT. Examples include the following:

- Strobes that change at the beginning of an access always align to the rising edge of XCLKOUT. This is because all XINTF accesses begin with respect to the rising edge of XCLKOUT.

Examples:	XZCSL	Zone chip-select active low
	XRNWL	XR/ $\overline{\text{W}}$ active low

- Strobes that change at the beginning of the active period will align to the rising edge of XCLKOUT if the total number of lead XTIMCLK cycles for the access is even. If the number of lead XTIMCLK cycles is odd, then the alignment will be with respect to the falling edge of XCLKOUT.

Examples:	XRDL	$\overline{\text{XRD}}$ active low
	XWEL	$\overline{\text{XWE1}}$ or $\overline{\text{XWE0}}$ active low

- Strobes that change at the beginning of the trail period will align to the rising edge of XCLKOUT if the total number of lead + active XTIMCLK cycles (including hardware waitstates) for the access is even. If the number of lead + active XTIMCLK cycles (including hardware waitstates) is odd, then the alignment will be with respect to the falling edge of XCLKOUT.

Examples:	XRDH	$\overline{\text{XRD}}$ inactive high
	XWEH	$\overline{\text{XWE1}}$ or $\overline{\text{XWE0}}$ inactive high

- Strobes that change at the end of the access will align to the rising edge of XCLKOUT if the total number of lead + active + trail XTIMCLK cycles (including hardware waitstates) is even. If the number of lead + active + trail XTIMCLK cycles (including hardware waitstates) is odd, then the alignment will be with respect to the falling edge of XCLKOUT.

Examples:	XZCSH	Zone chip-select inactive high
	XRNWH	XR/ $\overline{\text{W}}$ inactive high

Copyright © 2021 Texas Instruments Incorporated

7.9.6.5 External Interface Read Timing

7.9.6.5.1 External Interface Read Timing Requirements

		MIN	MAX	UNIT
$t_{a(A)}$	Access time, read data from address valid		(LR + AR) – 13.5 (1)	ns
$t_{a(XRD)}$	Access time, read data valid from $\overline{XRD}$ active low		AR – 13 (1)	ns
$t_{su(XD)XRD}$	Setup time, read data valid before $\overline{XRD}$ strobe inactive high	13		ns
$t_{h(XD)XRD}$	Hold time, read data valid after $\overline{XRD}$ inactive high	0		ns

(1) LR = Lead period, read access. AR = Active period, read access. See Table 7-2.

7.9.6.5.2 External Interface Read Switching Characteristics

PARAMETER		MIN	MAX	UNIT
$t_{d(XCOH-XZCSL)}$	Delay time, XCLKOUT high to zone chip-select active low	0	2	ns
$t_{d(XCOHL-XZCSH)}$	Delay time, XCLKOUT high/low to zone chip-select inactive high	–0.2	0.9	ns
$t_{d(XCOH-XA)}$	Delay time, XCLKOUT high to address valid		1.5	ns
$t_{d(XCOHL-XRDL)}$	Delay time, XCLKOUT high/low to $\overline{XRD}$ active low	–0.2	0.8	ns
$t_{d(XCOHL-XRDH)}$	Delay time, XCLKOUT high/low to $\overline{XRD}$ inactive high	–0.4	0.8	ns
$t_{h(XA)XZCSH}$	Hold time, address valid after zone chip-select inactive high	(1)		ns
$t_{h(XA)XRD}$	Hold time, address valid after $\overline{XRD}$ inactive high	(1)		ns

(1) During inactive cycles, the XINTF address bus always holds the last address put out on the bus . This includes alignment cycles.

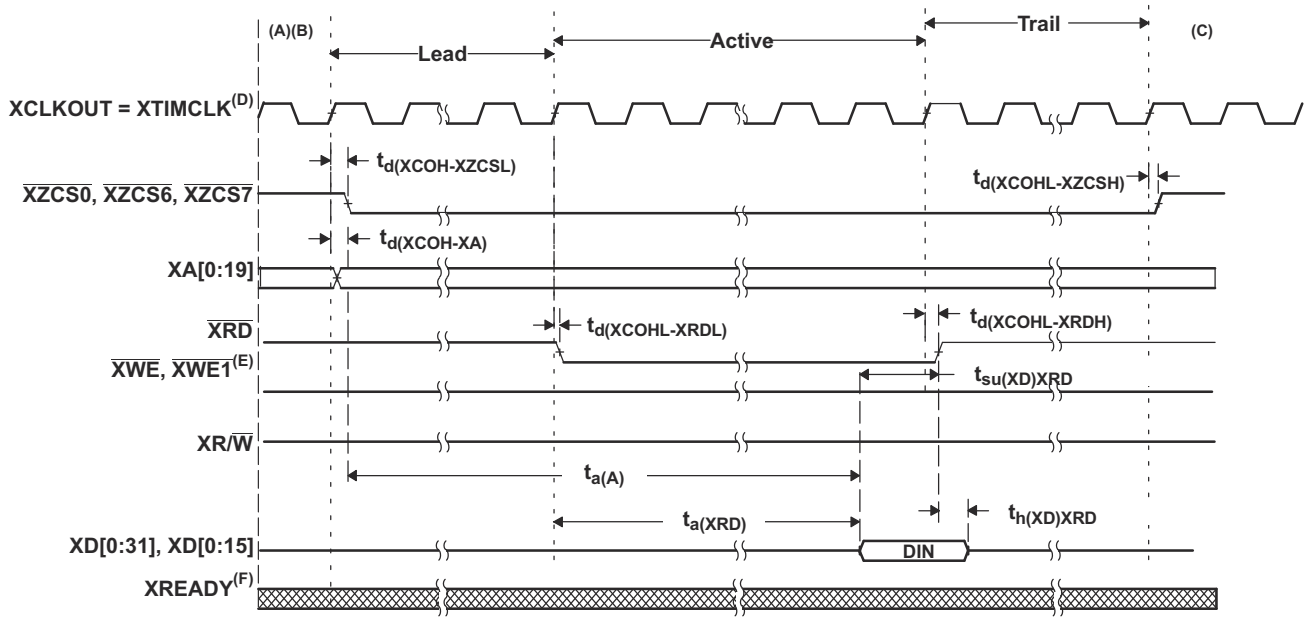

A. All XINTF accesses (lead period) begin on the rising edge of XCLKOUT. When necessary, the device inserts an alignment cycle before an access to meet this requirement.
B. During alignment cycles, all signals transition to their inactive state.
C. XA[0:19] holds the last address put on the bus during inactive cycles, including alignment cycles except XA0, which remains high.
D. Timings are also relevant for XCLKOUT = 1/2 XTIMCLK and XCLKOUT = 1/4 XTIMCLK.
E. $\overline{XWE1}$ is used in 32-bit data bus mode.
F. For USEREADY = 0, the external XREADY input signal is ignored.

Figure 7-28. Example Read Access

XTIMING register parameters used for this example (based on 300-MHz system clock):

Copyright © 2021 Texas Instruments Incorporated

XRDLEAD	XRDACTIVE	XRDTRAIL	USEREADY	X2TIMING	XWRLEAD	XWRACTIVE	XWRTRAIL	READYMODE
≥ 2	≥ 5	≥ 0	0	0	N/A(1)	N/A(1)	N/A(1)	N/A(1)

(1) N/A = Not applicable (or “Don’t care”) for this example

7.9.6.6 External Interface Write Timing

7.9.6.6.1 External Interface Write Switching Characteristics

PARAMETER		MIN	MAX	UNIT
$t_{d(XCOH-XZCSL)}$	Delay time, XCLKOUT high to zone chip-select active low	0	2	ns
$t_{d(XCOHL-XZCSH)}$	Delay time, XCLKOUT high or low to zone chip-select inactive high	–0.2	0.9	ns
$t_{d(XCOH-XA)}$	Delay time, XCLKOUT high to address valid		1.5	ns
$t_{d(XCOHL-XWEL)}$	Delay time, XCLKOUT high/low to $\overline{XWE0}$, $\overline{XWE1}$ low	–0.3	0.7	ns
$t_{d(XCOHL-XWEH)}$	Delay time, XCLKOUT high/low to $\overline{XWE0}$, $\overline{XWE1}$ high	–0.5	0.5	ns
$t_{d(XCOH-XRNWL)}$	Delay time, XCLKOUT high to XR/ $\overline{W}$ low	–0.2	1.5	ns
$t_{d(XCOHL-XRNWH)}$	Delay time, XCLKOUT high/low to XR/ $\overline{W}$ high	0.3	0.6	ns
$t_{en(XD)XWEL}$	Enable time, data bus driven from $\overline{XWE0}$, $\overline{XWE1}$ low	–7.5		ns
$t_{d(XWEL-XD)}$	Delay time, data valid after $\overline{XWE0}$, $\overline{XWE1}$ active low	0	4	ns
$t_{h(XA)XZCSH}$	Hold time, address valid after zone chip-select inactive high	(1)		ns
$t_{h(XD)XWE}$	Hold time, write data valid after $\overline{XWE0}$, $\overline{XWE1}$ inactive high	TW – 7.5 (2)		ns
$t_{dis(XD)XRNW}$	Maximum time for processor to release the data bus after XR/ $\overline{W}$ inactive high		0	ns

(1) During inactive cycles, the XINTF address bus will always hold the last address put out on the bus except XA0, which remains high. This includes alignment cycles.

(2) TW = Trail period, write access. See Table 7-2.

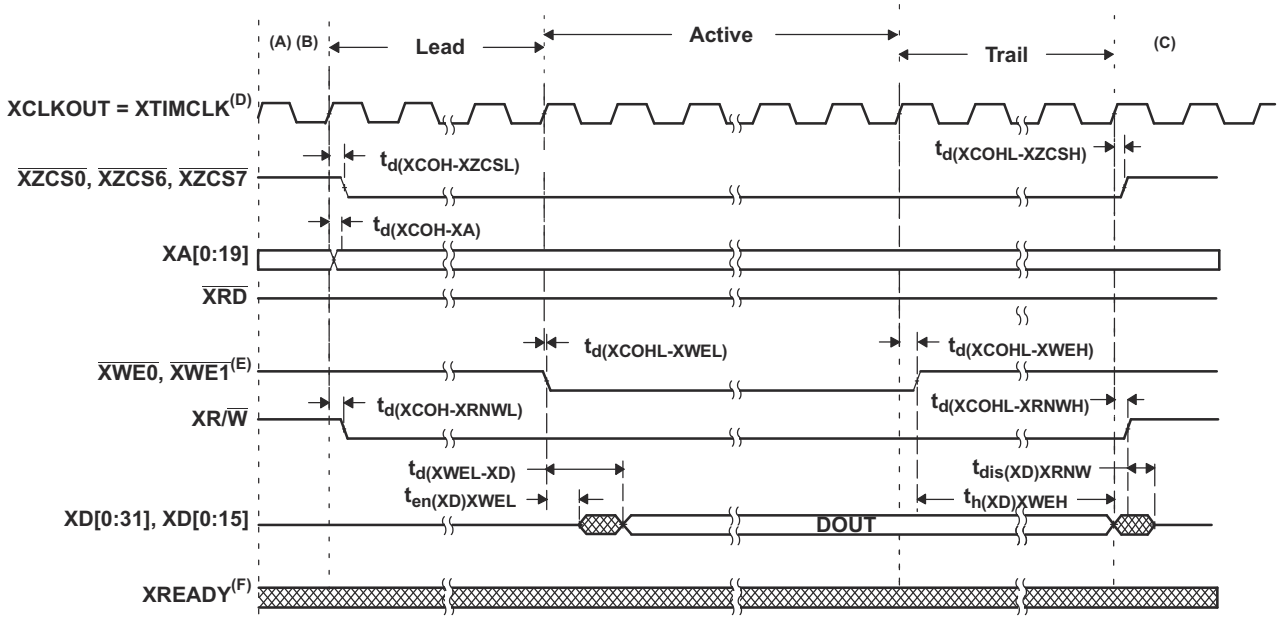

A. All XINTF accesses (lead period) begin on the rising edge of XCLKOUT. When necessary, the device inserts an alignment cycle before an access to meet this requirement.

B. During alignment cycles, all signals transition to their inactive state.

C. XA[0:19] holds the last address put on the bus during inactive cycles, including alignment cycles except XA0, which remains high.

D. Timings are also relevant for XCLKOUT = 1/2 XTIMCLK and XCLKOUT = 1/4 XTIMCLK.

E. $\overline{XWE1}$ is used in 32-bit data bus mode.

F. For USEREADY = 0, the external XREADY input signal is ignored.

Figure 7-29. Example Write Access

XTIMING register parameters used for this example (based on 300-MHz system clock):

Copyright © 2021 Texas Instruments Incorporated

XRDLEAD	XRDACTIVE	XRDTRAIL	USEREADY	X2TIMING	XWRLEAD	XWRACTIVE	XWRTRAIL	READYMODE
N/A(1)	N/A(1)	N/A(1)	0	0	≥ 3	≥ 1	≥ 3	N/A(1)

(1) N/A = Not applicable (or “Don’t care”) for this example

7.9.6.7 External Interface Ready-on-Read Timing With One External Wait State

7.9.6.7.1 External Interface Read Switching Characteristics (Ready-on-Read, One Wait State)

PARAMETER		MIN	MAX	UNIT
$t_{d(XCOH-XZCSL)}$	Delay time, XCLKOUT high to zone chip-select active low	0	2	ns
$t_{d(XCOHL-XZCSH)}$	Delay time, XCLKOUT high/low to zone chip-select inactive high	–0.2	0.9	ns
$t_{d(XCOH-XA)}$	Delay time, XCLKOUT high to address valid		1.5	ns
$t_{d(XCOHL-XRDL)}$	Delay time, XCLKOUT high/low to $\overline{XRD}$ active low	–0.2	0.8	ns
$t_{d(XCOHL-XRDH)}$	Delay time, XCLKOUT high/low to $\overline{XRD}$ inactive high	–0.4	0.8	ns
$t_{h(XA)XZCSH}$	Hold time, address valid after zone chip-select inactive high	(1)		ns
$t_{h(XA)XRD}$	Hold time, address valid after $\overline{XRD}$ inactive high	(1)		ns

(1) During inactive cycles, the XINTF address bus always holds the last address put out on the bus. This includes alignment cycles.

7.9.6.7.2 External Interface Read Timing Requirements (Ready-on-Read, One Wait State)

		MIN	MAX	UNIT
$t_{a(A)}$	Access time, read data from address valid		(LR + AR) – 13.5 (1)	ns
$t_{a(XRD)}$	Access time, read data valid from $\overline{XRD}$ active low		AR – 13 (1)	ns
$t_{su(XD)XRD}$	Setup time, read data valid before $\overline{XRD}$ strobe inactive high	13		ns
$t_{h(XD)XRD}$	Hold time, read data valid after $\overline{XRD}$ inactive high	0		ns

(1) LR = Lead period, read access. AR = Active period, read access. See Table 7-2.

7.9.6.7.3 Synchronous XREADY Timing Requirements (Ready-on-Read, One Wait State) (1)

		MIN	MAX	UNIT
$t_{su(XRDYsynchL)XCOHL}$	Setup time, XREADY (synchronous) low before XCLKOUT high/low	8		ns
$t_{h(XRDYsynchL)}$	Hold time, XREADY (synchronous) low	$1t_{c(XTIM)}$		ns
$t_{su(XRDYsynchH)XCOHL}$	Setup time, XREADY (synchronous) high before XCLKOUT high/low	8		ns
$t_{h(XRDYsynchH)XZCSH}$	Hold time, XREADY (synchronous) held high after zone chip select high	0		ns

(1) The first XREADY (synchronous) sample occurs with respect to E in Figure 7-30:
E = (XRDLEAD + XRDACTIVE) $t_{c(XTIM)}$
When first sampled, if XREADY (synchronous) is found to be high, then the access will finish. If XREADY (synchronous) is found to be low, it is sampled again each $t_{c(XTIM)}$ until it is found to be high.
For each sample (n) the setup time (F) with respect to the beginning of the access can be calculated as:
F = (XRDLEAD + XRDACTIVE +n − 1) $t_{c(XTIM)}$ − $t_{su(XRDYsynchL)XCOHL}$
where n is the sample number: n = 1, 2, 3, and so forth.

7.9.6.7.4 Asynchronous XREADY Timing Requirements (Ready-on-Read, One Wait State)

		MIN	MAX	UNIT
$t_{su(XRDYAsynchL)XCOHL}$	Setup time, XREADY (asynchronous) low before XCLKOUT high/low	8		ns
$t_{h(XRDYAsynchL)}$	Hold time, XREADY (asynchronous) low	$1t_{c(XTIM)}$		ns
$t_{su(XRDYAsynchH)XCOHL}$	Setup time, XREADY (asynchronous) high before XCLKOUT high/low	8		ns
$t_{h(XRDYasynchH)XZCSH}$	Hold time, XREADY (asynchronous) held high after zone chip select high	0		ns

Copyright © 2021 Texas Instruments Incorporated

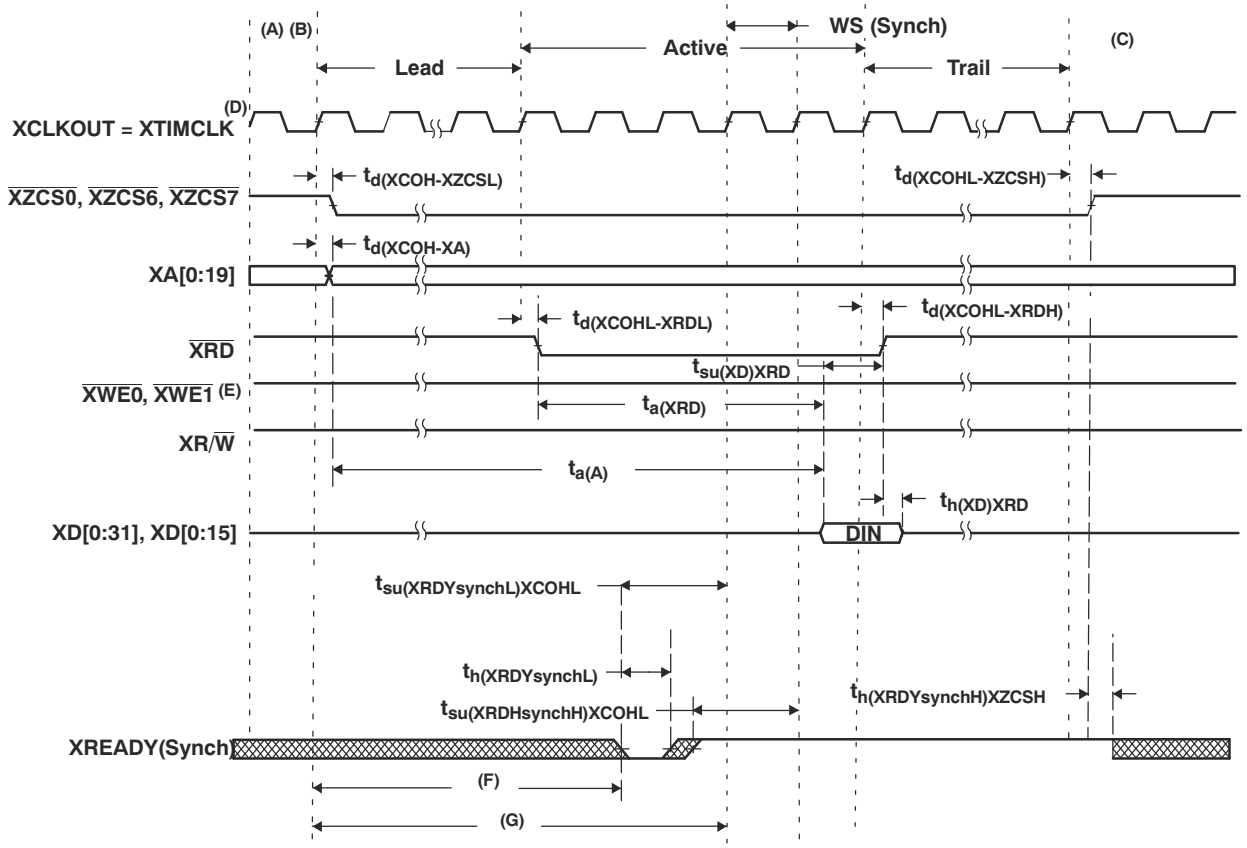

Legend:

▨ = Don't care. Signal can be high or low during this time.

A. All XINTF accesses (lead period) begin on the rising edge of XCLKOUT. When *necessary*, the device inserts an alignment cycle before an access to meet this requirement.

B. During alignment cycles, all signals transition to their inactive state.

C. During inactive cycles, the XINTF address bus always holds the last address put out on the bus except XA0, which remains high. This includes alignment cycles.

D. Timings are also relevant for XCLKOUT = 1/2 XTIMCLK and XCLKOUT = 1/4 XTIMCLK.

E. $\overline{XWE1}$ is valid only in 32-bit data bus mode.

F. For each sample, setup time from the beginning of the access (E) can be calculated as: D = (XRDLEAD + XRDACTIVE +n - 1) $t_{c(XTIM)}$ – $t_{su(XRDYsynchL)XCOHL}$

G. Reference for the first sample is with respect to this point: F = (XRDLEAD + XRDACTIVE) $t_{c(XTIM)}$ where n is the sample number: n = 1, 2, 3, and so forth.

Figure 7-30. Example Read With Synchronous XREADY Access

XTIMING register parameters used for this example (based on 300-MHz system clock):

XRDLEAD	XRDACTIVE	XRDTRAIL	USEREADY	X2TIMING	XWRLEAD	XWRACTIVE	XWRTRAIL	READYMODE
≥ 2	5	≥ 0	1	0	N/A(1)	N/A(1)	N/A(1)	0 = XREADY (Synch)

(1) N/A = "Don't care" for this example

Copyright © 2021 Texas Instruments Incorporated

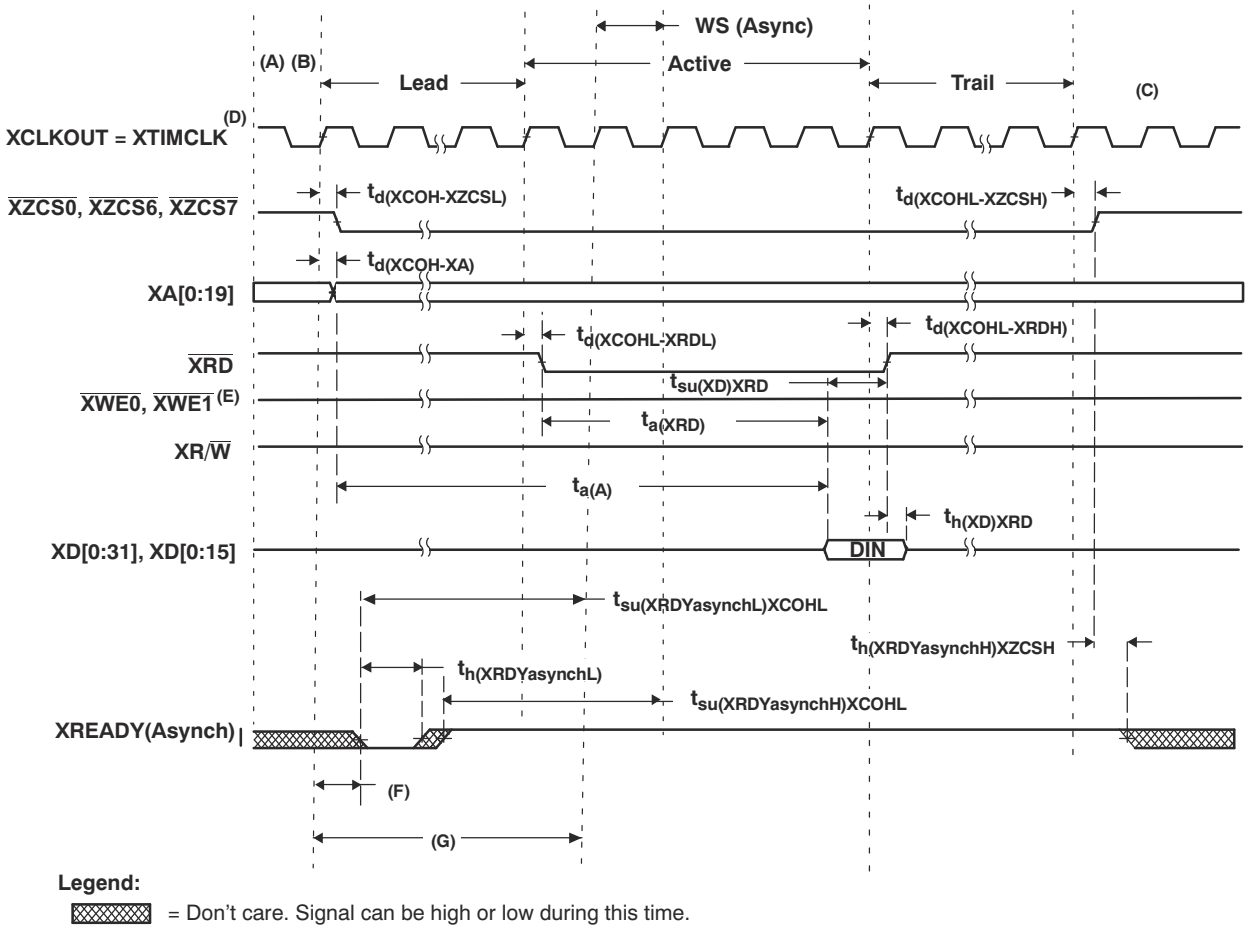

A. All XINTF accesses (lead period) begin on the rising edge of XCLKOUT. When necessary, the device will insert an alignment cycle before an access to meet this requirement.
B. During alignment cycles, all signals will transition to their inactive state.
C. During inactive cycles, the XINTF address bus will always hold the last address put out on the bus except XA0, which remains high. This includes alignment cycles.
D. Timings are also relevant for XCLKOUT = 1/2 XTIMCLK and XCLKOUT = 1/4 XTIMCLK.
E. $\overline{XWE1}$ is valid only in 32-bit data bus mode.
F. For each sample, setup time from the beginning of the access can be calculated as: E = (XRDLEAD + XRDACTIVE -3 +n) $t_{c(XTIM)}$ – $t_{su(XRDYasynchL)XCOHL}$ where n is the sample number: n = 1, 2, 3, and so forth.
G. Reference for the first sample is with respect to this point: F = (XRDLEAD + XRDACTIVE –2) $t_{c(XTIM)}$

Figure 7-31. Example Read With Asynchronous XREADY Access

XTIMING register parameters used for this example (based on 300-MHz system clock):

XRDLEAD	XRDACTIVE	XRDTRAIL	USEREADY	X2TIMING	XWRLEAD	XWRACTIVE	XWRTRAIL	READYMODE
≥ 2	5	≥ 0	1	0	N/A(1)	N/A(1)	N/A(1)	1 = XREADY (Async)

(1) N/A = "Don't care" for this example

Copyright © 2021 Texas Instruments Incorporated

7.9.6.8 External Interface Ready-on-Write Timing With One External Wait State

7.9.6.8.1 External Interface Write Switching Characteristics (Ready-on-Write, One Wait State)

PARAMETER		MIN	MAX	UNIT
$t_{d(XCOH-XZCSL)}$	Delay time, XCLKOUT high to zone chip-select active low	0	2	ns
$t_{d(XCOHL-XZCSH)}$	Delay time, XCLKOUT high or low to zone chip-select inactive high	–0.2	0.9	ns
$t_{d(XCOH-XA)}$	Delay time, XCLKOUT high to address valid		1.5	ns
$t_{d(XCOHL-XWEL)}$	Delay time, XCLKOUT high/low to $\overline{XWE0}$, $\overline{XWE1}$ low(3)	–0.3	0.7	ns
$t_{d(XCOHL-XWEH)}$	Delay time, XCLKOUT high/low to $\overline{XWE0}$, $\overline{XWE1}$ high(3)	–0.5	0.5	ns
$t_{d(XCOH-XRNWL)}$	Delay time, XCLKOUT high to XR/ $\overline{W}$ low	–0.2	1.5	ns
$t_{d(XCOHL-XRNWH)}$	Delay time, XCLKOUT high/low to XR/ $\overline{W}$ high	0.3	0.6	ns
$t_{en(XD)XWEL}$	Enable time, data bus driven from $\overline{XWE0}$, $\overline{XWE1}$ low	–7.5		ns
$t_{d(XWEL-XD)}$	Delay time, data valid after $\overline{XWE0}$, $\overline{XWE1}$ active low	0	4	ns
$t_{h(XA)XZCSH}$	Hold time, address valid after zone chip-select inactive high	(1)		ns
$t_{h(XD)XWE}$	Hold time, write data valid after $\overline{XWE0}$, $\overline{XWE1}$ inactive high(3)	TW – 7.5 (2)		ns
$t_{dis(XD)XRNW}$	Maximum time for processor to release the data bus after XR/ $\overline{W}$ inactive high		0	ns

(1) During inactive cycles, the XINTF address bus always holds the last address put out on the bus . This includes alignment cycles.
(2) TW = trail period, write access (see Table 7-2)
(3) $\overline{XWE1}$ is used in 32-bit data bus mode only. In 16-bit, this signal is XA0.

7.9.6.8.2 Synchronous XREADY Timing Requirements (Ready-on-Write, One Wait State) Table 8-23

		MIN	MAX	UNIT
$t_{su(XRDYsynchL)XCOHL}$	Setup time, XREADY (synchronous) low before XCLKOUT high/low	8		ns
$t_{h(XRDYsynchL)}$	Hold time, XREADY (synchronous) low	$1t_{c(XTIM)}$		ns
$t_{su(XRDYsynchH)XCOHL}$	Setup time, XREADY (synchronous) high before XCLKOUT high/low	8		ns
$t_{h(XRDYsynchH)XZCSH}$	Hold time, XREADY (synchronous) held high after zone chip select high	0		ns

7.9.6.8.3 Asynchronous XREADY Timing Requirements (Ready-on-Write, One Wait State) (1)

		MIN	MAX	UNIT
$t_{su(XRDYasynchL)XCOHL}$	Setup time, XREADY (asynchronous) low before XCLKOUT high/low	8		ns
$t_{h(XRDYasynchL)}$	Hold time, XREADY (asynchronous) low	$1t_{c(XTIM)}$		ns
$t_{su(XRDYasynchH)XCOHL}$	Setup time, XREADY (asynchronous) high before XCLKOUT high/low	8		ns
$t_{h(XRDYasynchH)XZCSH}$	Hold time, XREADY (asynchronous) held high after zone chip select high	0		ns

(1) The first XREADY (synchronous) sample occurs with respect to E in Figure 7-32:
E = (XWRLEAD + XWRACTIVE –2) $t_{c(XTIM)}$. When first sampled, if XREADY (asynchronous) is high, then the access will complete. If XREADY (asynchronous) is low, it is sampled again each $t_{c(XTIM)}$ until it is high.
For each sample, setup time from the beginning of the access can be calculated as:
F = (XWRLEAD + XWRACTIVE –3 + n) $t_{c(XTIM)}$ – $t_{su(XRDYasynchL)XCOHL}$
where n is the sample number: n = 1, 2, 3, and so forth.

Copyright © 2021 Texas Instruments Incorporated

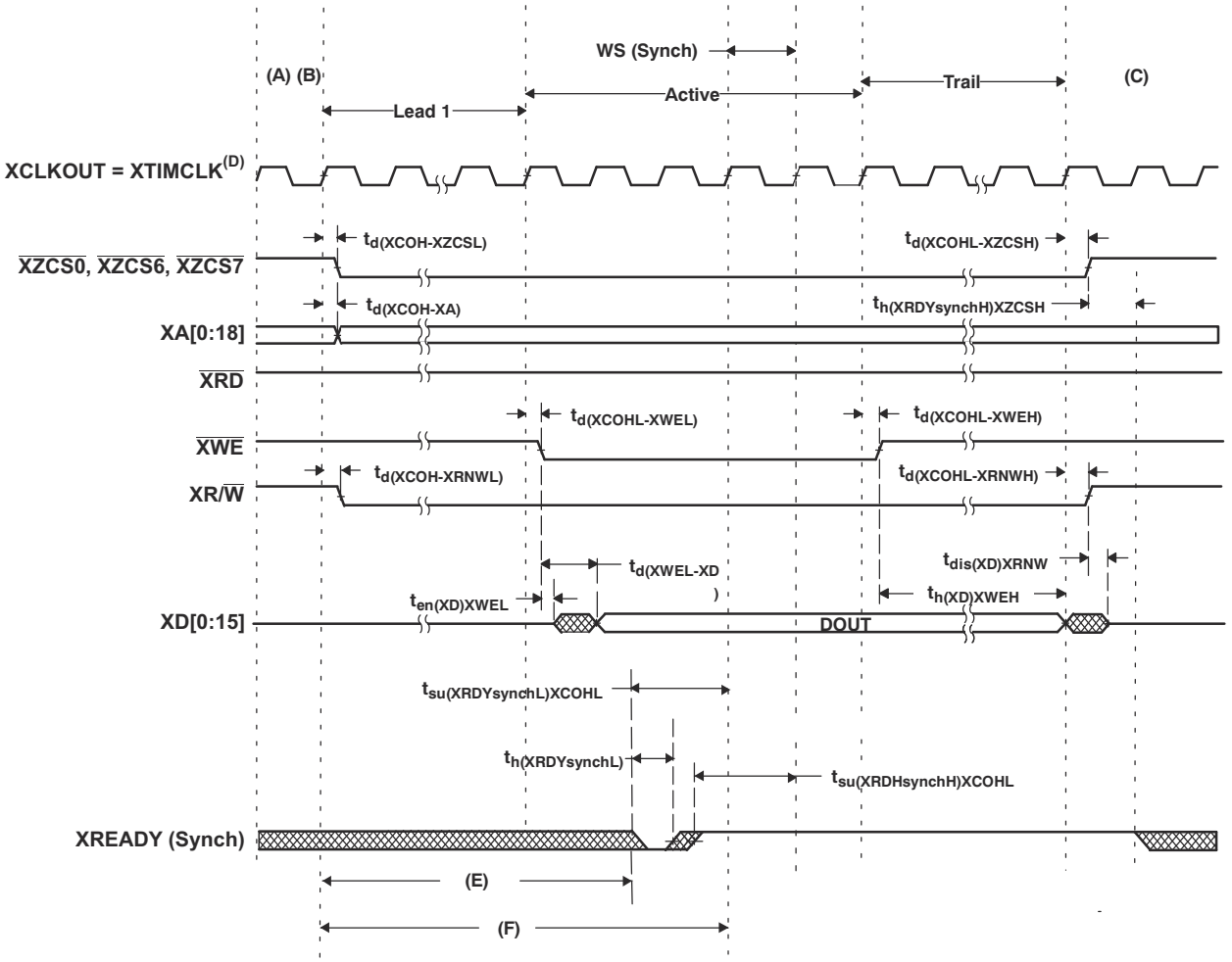

A. All XINTF accesses (lead period) begin on the rising edge of XCLKOUT. When necessary, the device inserts an alignment cycle before an access to meet this requirement.
B. During alignment cycles, all signals will transition to their inactive state.
C. During inactive cycles, the XINTF address bus always holds the last address put out on the bus except XA0, which remains high. This includes alignment cycles.
D. Timings are also relevant for XCLKOUT = 1/2 XTIMCLK and XCLKOUT = 1/4 XTIMCLK.
E. $\overline{XWE1}$ is used in 32-bit data bus mode only.
F. For each sample, setup time from the beginning of the access can be calculated as E = (XWRLEAD + XWRACTIVE + n –1) $t_{c(XTIM)}$ – $t_{su(XRDYsynchL)XCOH}$ where n is the sample number: n = 1, 2, 3, and so forth.
G. Reference for the first sample is with respect to this point: F = (XWRLEAD + XWRACTIVE) $t_{c(XTIM)}$

Figure 7-32. Write With Synchronous XREADY Access

XTIMING register parameters used for this example (based on 300-MHz system clock):

XRDLEAD	XRDACTIVE	XRDTRAIL	USEREADY	X2TIMING	XWRLEAD	XWRACTIVE	XWRTRAIL	READYMODE
N/A(1)	N/A(1)	N/A(1)	1	0	≥ 3	1	≥3	0 = XREADY (Synch)

(1) N/A = "Don't care" for this example.

Copyright © 2021 Texas Instruments Incorporated

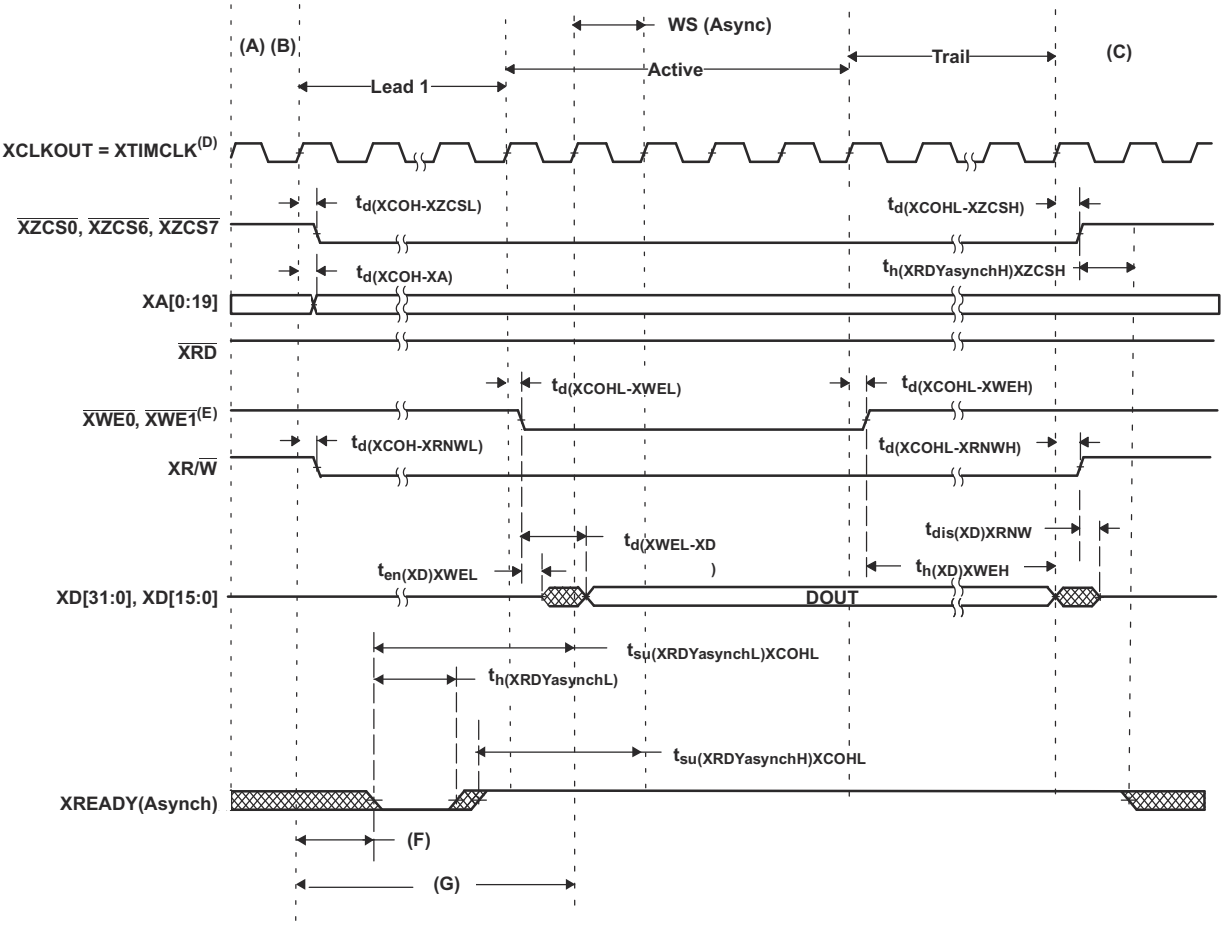

Legend:

= Don't care. Signal can be high or low during this time.

A. All XINTF accesses (lead period) begin on the rising edge of XCLKOUT. When necessary, the device inserts an alignment cycle before an access to meet this requirement.
B. During alignment cycles, all signals transition to their inactive state.
C. During inactive cycles, the XINTF address bus always holds the last address put out on the bus except XA0, which remains high. This includes alignment cycles.
D. Timings are also relevant for XCLKOUT = 1/2 XTIMCLK and XCLKOUT = 1/4 XTIMCLK.
E. $\overline{\text{XWE1}}$ is used in 32-bit data bus mode only.
F. For each sample, set up time from the beginning of the access can be calculated as: E = (XWRLEAD + XWRACTIVE -3 + n) $t_{c(XTIM)}$ – $t_{su(XRDYasynchL)XCOHL}$ where n is the sample number: n = 1, 2, 3, and so forth.
G. Reference for the first sample is with respect to this point: F = (XWRLEAD + XWRACTIVE – 2) $t_{c(XTIM)}$

Figure 7-33. Write With Asynchronous XREADY Access

XTIMING register parameters used for this example (based on 300-MHz system clock):

XRDLEAD	XRDACTIVE	XRDTRAIL	USEREADY	X2TIMING	XWRLEAD	XWRACTIVE	XWRTRAIL	READYMODE
N/A(1)	N/A(1)	N/A(1)	1	0	≥ 3	3	≥ 3	1 = XREADY (Async)

(1) N/A = "Don't care" for this example

Copyright © 2021 Texas Instruments Incorporated

7.9.6.9 $\overline{\text{XHOLD}}$ and $\overline{\text{XHOLDA}}$ Timing

If the HOLD mode bit is set while $\overline{\text{XHOLD}}$ and $\overline{\text{XHOLDA}}$ are both low (external bus accesses granted), the $\overline{\text{XHOLDA}}$ signal is forced high (at the end of the current cycle) and the external interface is taken out of high-impedance mode.

On a reset ($\overline{\text{XRS}}$), the HOLD mode bit is set to 0. If the $\overline{\text{XHOLD}}$ signal is active low on a system reset, the bus and all signal strobes must be in high-impedance mode, and the $\overline{\text{XHOLDA}}$ signal is also driven active low.

When HOLD mode is enabled and $\overline{\text{XHOLDA}}$ is active low (external bus grant active), the CPU can still execute code from internal memory. If an access is made to the external interface, the CPU is stalled until the $\overline{\text{XHOLD}}$ signal is removed.

An external DMA request, when granted, places the following signals in a high-impedance mode:

XA[19:0]	$\overline{\text{XZCS0}}$
XD[31:0], XD[15:0]	$\overline{\text{XZCS6}}$
$\overline{\text{XWE0}}$, $\overline{\text{XWE1}}$, $\overline{\text{XRD}}$	$\overline{\text{XZCS7}}$
XR/ $\overline{\text{W}}$	

All other signals not listed in this group remain in their default or functional operational modes during these signal events.

Copyright © 2021 Texas Instruments Incorporated

7.9.6.9.1 $\overline{\text{XHOLD}}$/ $\overline{\text{XHOLDA}}$ Timing Requirements (1) (2) (3)

		MIN	MAX	UNIT
$t_{d(HL-HiZ)}$	Delay time, $\overline{\text{XHOLD}}$ low to Hi-Z on all address, data, and control		$4t_{c(XTIM)} + t_{c(XCO)} + 20$	ns
$t_{d(HL-HAL)}$	Delay time, $\overline{\text{XHOLD}}$ low to $\overline{\text{XHOLDA}}$ low		$4t_{c(XTIM)} + 2t_{c(XCO)} + 20$	ns
$t_{d(HH-HAH)}$	Delay time, $\overline{\text{XHOLD}}$ high to $\overline{\text{XHOLDA}}$ high		$4t_{c(XTIM)} + 20$	ns
$t_{d(HH-BV)}$	Delay time, $\overline{\text{XHOLD}}$ high to bus valid		$6t_{c(XTIM)} + 20$	ns

(1) When a low signal is detected on $\overline{\text{XHOLD}}$, all pending XINTF accesses will be completed before the bus is placed in a high-impedance state.

(2) The state of $\overline{\text{XHOLD}}$ is latched on the rising edge of XTIMCLK.

(3) After the $\overline{\text{XHOLD}}$ is detected low or high, all bus transitions and $\overline{\text{XHOLDA}}$ transitions occur with respect to the rising edge of XCLKOUT. Thus, for this mode where XCLKOUT = 1/2 XTIMCLK, the transitions can occur up to 1 XTIMCLK cycle earlier than the maximum value specified.

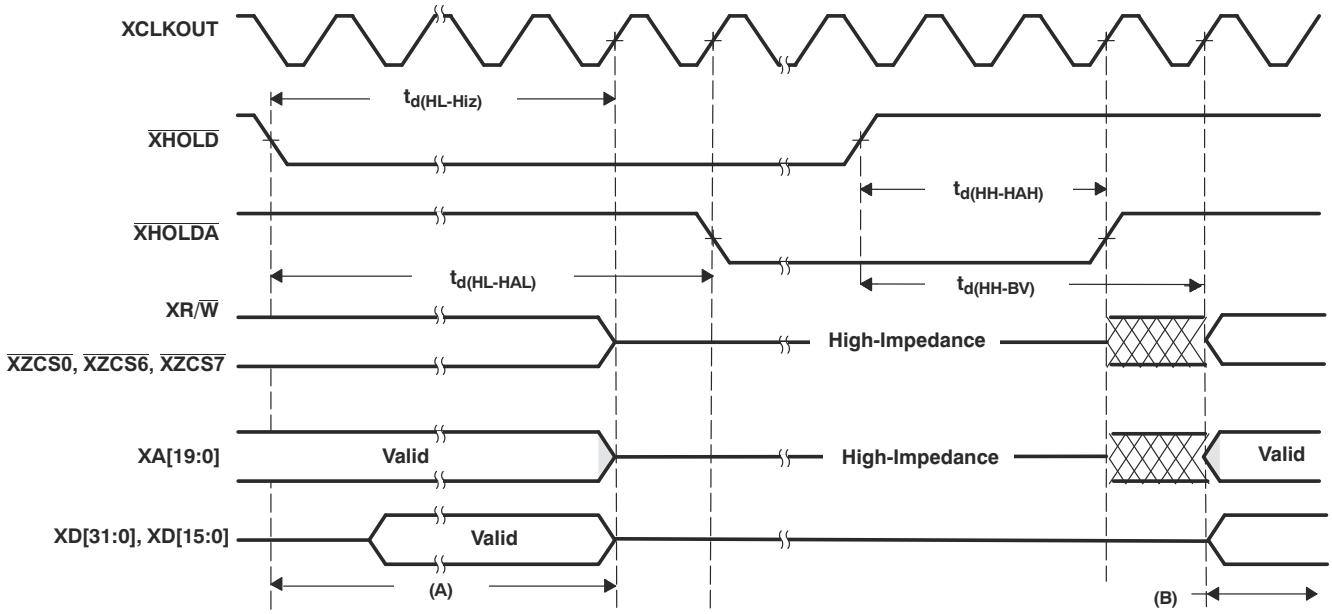

A. All pending XINTF accesses are completed.

B. Normal XINTF operation resumes.

Figure 7-34. External Interface Hold Waveform

Copyright © 2021 Texas Instruments Incorporated

8 Detailed Description

8.1 Brief Descriptions

8.1.1 C28x CPU

The C2834x (C28x+FPU) family is a member of the TMS320C2000™ microcontroller unit (MCU) platform. The C28x+FPU based controllers have the same 32-bit fixed-point architecture as TI's existing C28x MCUs, but also include a single-precision (32-bit) IEEE 754 floating-point unit (FPU). It is a very efficient C/C++ engine, enabling users to develop their system control software in a high-level language. It also enables math algorithms to be developed using C/C++. The device is as efficient at DSP math tasks as it is at system control tasks . This efficiency removes the need for a second processor in many systems. The 32 × 32-bit MAC 64-bit processing capabilities enable the controller to handle higher numerical resolution problems efficiently. Add to this the fast interrupt response with automatic context save of critical registers, resulting in a device that is capable of servicing many asynchronous events with minimal latency. The device has an 8-level-deep protected pipeline with pipelined memory accesses. This pipelining enables it to execute at high speeds without resorting to expensive high-speed memories. Special branch-look-ahead hardware minimizes the latency for conditional discontinuities. Special store conditional operations further improve performance.

8.1.2 Memory Bus (Harvard Bus Architecture)

As with many MCU type devices, multiple buses are used to move data between the memories and peripherals and the CPU. The C28x memory bus architecture contains a program read bus, data read bus and data write bus. The program read bus consists of 22 address lines and 32 data lines. The data read and write buses consist of 32 address lines and 32 data lines each. The 32-bit-wide data buses enable single cycle 32-bit operations. The multiple bus architecture, commonly termed Harvard Bus, enables the C28x to fetch an instruction, read a data value and write a data value in a single cycle. All peripherals and memories attached to the memory bus will prioritize memory accesses. Generally, the priority of memory bus accesses can be summarized as follows:

Highest:	Data Writes	(Simultaneous data and program writes cannot occur on the memory bus.)
	Program Writes	(Simultaneous data and program writes cannot occur on the memory bus.)
	Data Reads	
	Program Reads	(Simultaneous program reads and fetches cannot occur on the memory bus.)
Lowest:	Fetches	(Simultaneous program reads and fetches cannot occur on the memory bus.)

8.1.3 Peripheral Bus

To enable migration of peripherals between various TI MCU family of devices, the C2834x devices adopt a peripheral bus standard for peripheral interconnect. The peripheral bus bridge multiplexes the various buses that make up the processor Memory Bus into a single bus consisting of 16 address lines and 16 or 32 data lines and associated control signals. Three versions of the peripheral bus are supported. One version supports only 16-bit accesses (called peripheral frame 2). Another version supports both 16- and 32-bit accesses (called peripheral frame 1). The third version supports DMA access and both 16- and 32-bit accesses (called peripheral frame 3).

8.1.4 Real-Time JTAG and Analysis

The C2834x devices implement the standard IEEE 1149.1 JTAG interface. Additionally, the devices support real-time mode of operation whereby the contents of memory, peripheral and register locations can be modified while the processor is running and executing code and servicing interrupts. The user can also single step through nontime-critical code while enabling time-critical interrupts to be serviced without interference. The device implements the real-time mode in hardware within the CPU. This is a feature unique to the C2834x device, requiring no software monitor. Additionally, special analysis hardware is provided that allows setting of hardware breakpoint or data/address watch-points and generate various user-selectable break events when a match occurs.

8.1.5 External Interface (XINTF)

This asynchronous interface consists of 20 address lines, 32 data lines, and three chip-select lines. The chip-select lines are mapped to three external zones, Zones 0, 6, and 7. Each of the three zones can be programmed

Copyright © 2021 Texas Instruments Incorporated

with a different number of wait states, strobe signal setup and hold timing and each zone can be programmed for extending wait states externally or not. The programmable wait state, chip-select and programmable strobe timing enables glueless interface to external memories and peripherals.

8.1.6 M0, M1 SARAMs

All C2834x devices contain these two blocks of single access memory, each 1K × 16 in size. The stack pointer points to the beginning of block M1 on reset. The M0 and M1 blocks, like all other memory blocks on C28x devices, are mapped to both program and data space. Hence, the user can use M0 and M1 to execute code or for data variables. The partitioning is performed within the linker. The C28x device presents a unified memory map to the programmer. This makes for easier programming in high-level languages.

8.1.7 L0, L1, L2, L3, L4, L5, L6, L7, H0, H1, H2, H3, H4, H5 SARAMs

The 2834x has up to 256K × 16 single-access RAM (SARAM) divided up into the following categories:

L0, L1, L2, L3, L4, L5 SARAM Blocks	Up to 48K × 16 of SARAM at all frequencies. Each block is 8K × 16.
L6, L7 SARAM Blocks	These 8K × 16 SARAM blocks are single-wait state at all frequencies.
H0, H1, H2, H3, H4, H5 SARAM Blocks	H0–H5 are each 32K × 16 and 1-wait state at all frequencies. A program-access prefetch buffer is used to improve performance of linear code.

All SARAM blocks are mapped to both program and data space. L0–L7 are accessible by both the CPU and the DMA (1 wait state).

8.1.8 Boot ROM

The Boot ROM is factory-programmed with boot-loading software. Boot-mode signals are provided to tell the bootloader software what boot mode to use on power up. The user can select to boot normally or to download new software from an external connection or to select boot software that is programmed in the internal ROM. The Boot ROM also contains standard tables, such as SIN/COS waveforms, for use in math related algorithms.

Table 8-1. Boot Mode Selection

MODE	GPIO87/XA15	GPIO86/XA14	GPIO85/XA13	GPIO84/XA12	MODE(1)
F	1	1	1	1	Secure boot(2)
E	1	1	1	0	SCI-A boot
D	1	1	0	1	SPI-A boot
C	1	1	0	0	I2C-A boot Timing 1
B	1	0	1	1	eCAN-A boot Timing 1
A	1	0	1	0	McBSP-A boot
9	1	0	0	1	Jump to XINTF x16
8	1	0	0	0	Reserved
7	0	1	1	1	eCAN-A boot Timing 2
6	0	1	1	0	Parallel GPIO I/O boot
5	0	1	0	1	Parallel XINTF boot
4	0	1	0	0	Jump to SARAM
3	0	0	1	1	Branch to check boot mode
2	0	0	1	0	I2C-A boot Timing 2
1	0	0	0	1	Reserved
0	0	0	0	0	TI Test Only

(1) All four GPIO pins have an internal pullup.
(2) This mode is available on secure devices only. See Section 8.1.9, Security.

8.1.9 Security

The 128-bit password locations on these devices will always read back 0xFFFF. To preserve compatibility with other C28x designs with code security, the password locations at 0x33FFF8–0x33FFFF must be read after a device reset; otherwise, certain memory locations will be inaccessible. The Boot ROM code performs this read during start-up. If during debug the Boot ROM is bypassed, then it is the responsibility of the application software to read the password locations after a reset.

Custom Encryption: Activating the Code Security Module (CSM) and Emulation Code Security Logic (ECSL)

Custom secure versions of these devices enable the CSM and ECSL logic. In the custom version, the 128-bit password locations are set to a customer-chosen value, activating the Code Security Module (CSM), which protects the Hx RAM memories from unauthorized access. Additionally, a TI-generated AES decryption routine is embedded into an on-chip secure ROM, providing a method to secure application code that is stored externally. *Requests for custom secure versions are not accepted by TI anymore.*

Note

THE CODE SECURITY MODULE (CSM) INCLUDED ON THIS DEVICE WAS DESIGNED TO PASSWORD PROTECT THE DATA STORED IN THE ASSOCIATED MEMORY (Hx RAM) AND IS WARRANTED BY TEXAS INSTRUMENTS (TI), IN ACCORDANCE WITH ITS STANDARD TERMS AND CONDITIONS, TO CONFORM TO TI'S PUBLISHED SPECIFICATIONS FOR THE WARRANTY PERIOD APPLICABLE FOR THIS DEVICE.

TI DOES NOT, HOWEVER, WARRANT OR REPRESENT THAT THE CSM CANNOT BE COMPROMISED OR BREACHED OR THAT THE DATA STORED IN THE ASSOCIATED MEMORY CANNOT BE ACCESSED THROUGH OTHER MEANS. MOREOVER, EXCEPT AS SET FORTH ABOVE, TI MAKES NO WARRANTIES OR REPRESENTATIONS CONCERNING THE CSM OR OPERATION OF THIS DEVICE, INCLUDING ANY IMPLIED WARRANTIES OF MERCHANTABILITY OR FITNESS FOR A PARTICULAR PURPOSE.

IN NO EVENT SHALL TI BE LIABLE FOR ANY CONSEQUENTIAL, SPECIAL, INDIRECT, INCIDENTAL, OR PUNITIVE DAMAGES, HOWEVER CAUSED, ARISING IN ANY WAY OUT OF YOUR USE OF THE CSM OR THIS DEVICE, WHETHER OR NOT TI HAS BEEN ADVISED OF THE POSSIBILITY OF SUCH DAMAGES. EXCLUDED DAMAGES INCLUDE, BUT ARE NOT LIMITED TO LOSS OF DATA, LOSS OF GOODWILL, LOSS OF USE OR INTERRUPTION OF BUSINESS OR OTHER ECONOMIC LOSS.

Copyright © 2021 Texas Instruments Incorporated

8.1.10 Peripheral Interrupt Expansion (PIE) Block

The PIE block serves to multiplex numerous interrupt sources into a smaller set of interrupt inputs. The PIE block can support up to 96 peripheral interrupts. On the C2834x, 64 of the possible 96 interrupts are used by peripherals. The 96 interrupts are grouped into blocks of 8 and each group is fed into 1 of 12 CPU interrupt lines (INT1 to INT12). Each of the 96 interrupts is supported by its own vector stored in a dedicated RAM block that can be overwritten by the user. The vector is automatically fetched by the CPU on servicing the interrupt. It takes eight CPU clock cycles to fetch the vector and save critical CPU registers. Hence the CPU can quickly respond to interrupt events. Prioritization of interrupts is controlled in hardware and software. Each individual interrupt can be enabled or disabled within the PIE block.

8.1.11 External Interrupts (XINT1–XINT7, XNMI)

The devices support eight masked external interrupts (XINT1–XINT7, XNMI). XNMI can be connected to the INT13 or NMI interrupt of the CPU. Each of the interrupts can be selected for negative, positive, or both negative and positive edge triggering and can also be enabled or disabled (including the XNMI). XINT1, XINT2, and XNMI also contain a 16-bit free-running up counter, which is reset to zero when a valid interrupt edge is detected. This counter can be used to accurately time-stamp the interrupt. Unlike the 281x devices, there are no dedicated pins for the external interrupts. XINT1 XINT2, and XNMI interrupts can accept inputs from GPIO0–GPIO31 pins. XINT3–XINT7 interrupts can accept inputs from GPIO32–GPIO63 pins.

8.1.12 Oscillator and PLL

The device can be clocked by an external oscillator or by a crystal attached to the on-chip oscillator circuit. A PLL is provided supporting up to 31 input-clock-scaling ratios. The PLL ratios can be changed on-the-fly in software, enabling the user to scale back on operating frequency if lower power operation is desired. Refer to *Section 7.9.4.4* for timing details. The PLL block can be set in bypass mode.

8.1.13 Watchdog

The devices contain a watchdog timer. The user software must regularly reset the watchdog counter within a certain time frame; otherwise, the watchdog will generate a reset to the processor. The watchdog can be disabled if necessary.

8.1.14 Peripheral Clocking

The clocks to each individual peripheral can be enabled or disabled so as to reduce power consumption when a peripheral is not in use. Additionally, the system clock to the serial ports (except I2C and eCAN) blocks can be scaled relative to the CPU clock. This enables the timing of peripherals to be decoupled from increasing CPU clock speeds.

8.1.15 Low-Power Modes

The devices are full static CMOS devices. Three low-power modes are provided:

IDLE:	Place CPU into low-power mode. Peripheral clocks may be turned off selectively and only those peripherals that need to function during IDLE are left operating. An enabled interrupt from an active peripheral or the watchdog timer will wake the processor from IDLE mode.
STANDBY:	Turns off clock to CPU and peripherals. This mode leaves the oscillator and PLL functional. An external interrupt event will wake the processor and the peripherals. Execution begins on the next valid cycle after detection of the interrupt event
HALT:	Turns off the internal oscillator. This mode basically shuts down the device and places it in the lowest possible power consumption mode. A reset or external signal can wake the device from this mode.

Copyright © 2021 Texas Instruments Incorporated

8.1.16 Peripheral Frames 0, 1, 2, 3 (PFn)

The device segregates peripherals into four sections. The mapping of peripherals is as follows:

PF0:	PIE:	PIE Interrupt Enable and Control Registers Plus PIE Vector Table
	XINTF:	External Interface Registers
	DMA	DMA Registers
	Timers:	CPU-Timers 0, 1, 2 Registers
PF1:	eCAN:	eCAN Mailbox and Control Registers
	GPIO:	GPIO MUX Configuration and Control Registers
	ePWM:	Enhanced Pulse Width Modulator Module and Registers
	eCAP:	Enhanced Capture Module and Registers
	eQEP:	Enhanced Quadrature Encoder Pulse Module and Registers
PF2:	SYS:	System Control Registers
	SCI:	Serial Communications Interface (SCI) Control and RX/TX Registers
	SPI:	Serial Port Interface (SPI) Control and RX/TX Registers
	ADC:	External ADC Interface
	I2C:	Inter-Integrated Circuit Module and Registers
	XINT	External Interrupt Registers
PF3:	McBSP	Multichannel Buffered Serial Port Registers

8.1.17 General-Purpose Input/Output (GPIO) Multiplexer

Most of the peripheral signals are multiplexed with GPIO signals. This enables the user to use a pin as GPIO if the peripheral signal or function is not used. On reset, GPIO pins are configured as inputs. The user can individually program each pin for GPIO mode or peripheral signal mode. For specific inputs, the user can also select the number of input qualification cycles. This is to filter unwanted noise glitches. The GPIO signals can also be used to bring the device out of specific low-power modes.

8.1.18 32-Bit CPU-Timers (0, 1, 2)

CPU-Timers 0, 1, and 2 are identical 32-bit timers with presettable periods and with 16-bit clock prescaling. The timers have a 32-bit count down register, which generates an interrupt when the counter reaches zero. The counter is decremented at the CPU clock speed divided by the prescale value setting. When the counter reaches zero, it is automatically reloaded with a 32-bit period value. CPU-Timer 2 is reserved for Real-Time OS (RTOS)/ BIOS applications. It is connected to INT14 of the CPU. If DSP/BIOS™ or SYS/BIOS is not being used, CPU-Timer 2 is available for general use. CPU-Timer 1 is for general use and can be connected to INT13 of the CPU. CPU-Timer 0 is also for general use and is connected to the PIE block.

Copyright © 2021 Texas Instruments Incorporated

8.1.19 Control Peripherals

The C2834x devices support the following peripherals which are used for embedded control and communication:

ePWM: The enhanced PWM peripheral supports independent and complementary PWM generation, adjustable dead-band generation for leading and trailing edges, latched and cycle-by-cycle trip mechanism. Some of the PWM pins support HRPWM features.

eCAP: The enhanced capture peripheral uses a 32-bit time base and registers up to four programmable events in continuous/one-shot capture modes.
This peripheral can also be configured to generate an auxiliary PWM signal.

eQEP: The enhanced QEP peripheral uses a 32-bit position counter, supports low-speed measurement using capture unit and high-speed measurement using a 32-bit unit timer.
This peripheral has a watchdog timer to detect motor stall and input error detection logic to identify simultaneous edge transition in QEP signals.

8.1.20 Serial Port Peripherals

The devices support the following serial communication peripherals:

eCAN: This is the enhanced version of the CAN peripheral. It supports 32 mailboxes, time-stamping of messages, and is compliant with ISO 11898-1 (CAN 2.0B).

McBSP: The multichannel buffered serial port (McBSP) connects to E1/T1 lines, phone-quality codecs for modem applications or high-quality stereo audio DAC devices. The McBSP receive and transmit registers are supported by the DMA to significantly reduce the overhead for servicing this peripheral. Each McBSP module can be configured as an SPI as required.

SPI: The SPI is a high-speed, synchronous serial I/O port that allows a serial bit stream of programmed length (1 to 16 bits) to be shifted into and out of the device at a programmable bit-transfer rate. Normally, the SPI is used for communications between the MCU and external peripherals or another processor. Typical applications include external I/O or peripheral expansion through devices such as shift registers, display drivers, and ADCs. Multidevice communications are supported by the master/slave operation of the SPI. The SPI contains a 16-level receive and transmit FIFO for reducing interrupt servicing overhead.

SCI: The serial communications interface is a 2-wire asynchronous serial port, commonly known as UART. The SCI contains a 16-level receive and transmit FIFO for reducing interrupt servicing overhead.

I2C: The inter-integrated circuit (I2C) module provides an interface between an MCU and other devices compliant with Philips Semiconductors Inter-IC bus (I2C-bus) specification version 2.1 and connected by way of an I2C-bus. External components attached to this 2-wire serial bus can transmit/receive up to 8-bit data to/from the MCU through the I2C module. The I2C contains a 16-level receive and transmit FIFO for reducing interrupt servicing overhead.

Copyright © 2021 Texas Instruments Incorporated

8.2 Peripherals

The integrated peripherals are described in the following subsections:

- 6-channel Direct Memory Access (DMA)
- Three 32-bit CPU-Timers
- Up to nine enhanced PWM modules (ePWM1, ePWM2, ePWM3, ePWM4, ePWM5, ePWM6, ePWM7, ePWM8, ePWM9)
- Up to six enhanced capture modules (eCAP1, eCAP2, eCAP3, eCAP4, eCAP5, eCAP6)
- Up to three enhanced QEP modules (eQEP1, eQEP2, eQEP3)
- External analog-to-digital converter (ADC) Interface
- Up to two enhanced controller area network (eCAN) modules (eCAN-A, eCAN-B)
- Up to three serial communications interface modules (SCI-A, SCI-B, SCI-C)
- Up to two serial peripheral interface (SPI) modules (SPI-A, SPI-D)
- Inter-integrated circuit (I2C) module
- Up to two multichannel buffered serial port (McBSP-A, McBSP-B) modules
- Digital I/O and shared pin functions
- External Interface (XINTF)

8.2.1 DMA Overview

Features:

- 6 channels with independent PIE interrupts
- Trigger sources:
  - McBSP-A and McBSP-B transmit and receive logic
  - XINT1–7 and XINT13
  - CPU timers
  - Software
- Data sources and destinations:
  - L0–L7 64K × 16 SARAM
  - All XINTF zones
  - McBSP-A and McBSP-B transmit and receive buffers
- Word Size: 16-bit or 32-bit (McBSPs limited to 16-bit)
- Throughput: 4 cycles/word (5 cycles/word for McBSP reads)

Copyright © 2021 Texas Instruments Incorporated

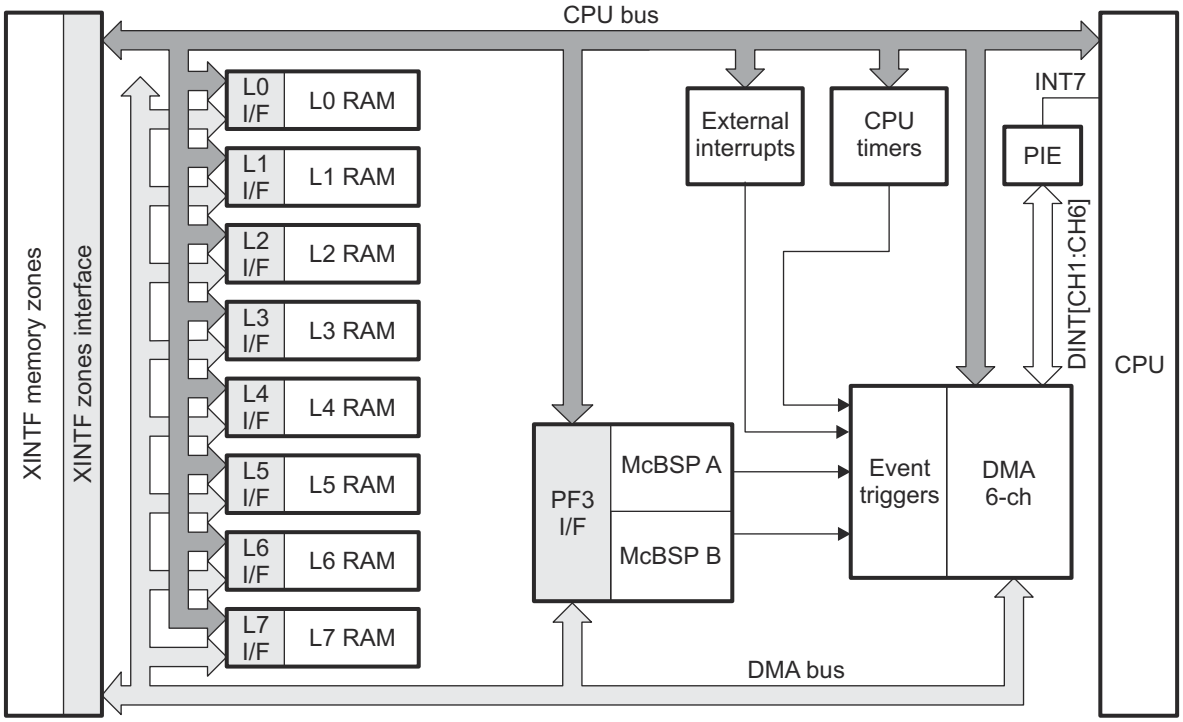

Figure 8-1. DMA Functional Block Diagram

8.2.2 32-Bit CPU-Timer 0, CPU-Timer 1, CPU-Timer 2

There are three 32-bit CPU-timers on the devices (CPU-Timer 0, CPU-Timer 1, CPU-Timer 2).

CPU-Timer 2 is reserved for DSP/BIOS or SYS/BIOS. CPU-Timer 0 and CPU-Timer 1 can be used in user applications. These timers are different from the timers that are present in the ePWM modules.

Note

If the application is not using DSP/BIOS or SYS/BIOS, then CPU-Timer 2 can be used in the application.

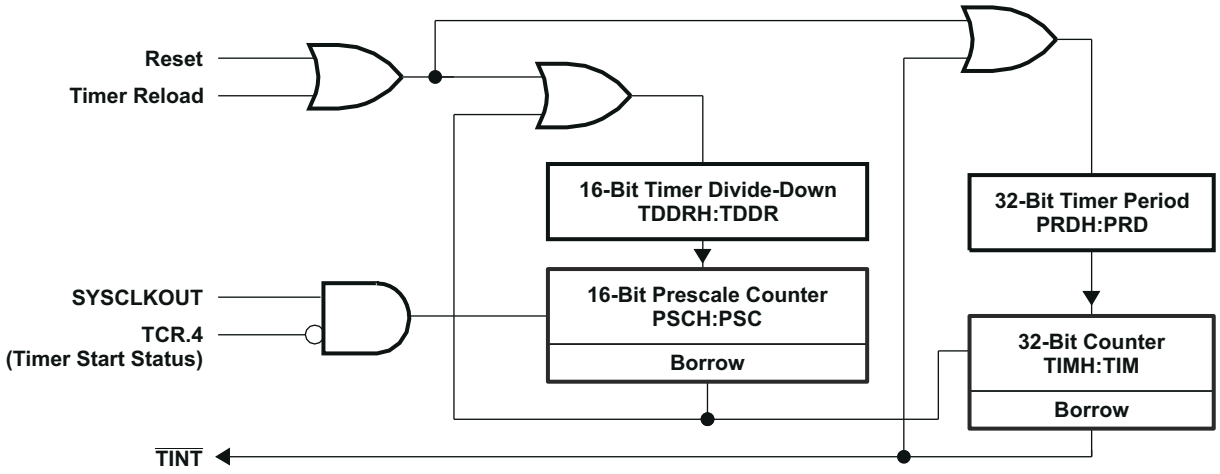

Figure 8-2. CPU-Timers

The timer interrupt signals (TINT0, TINT1, TINT2) are connected as shown in Figure 8-3.

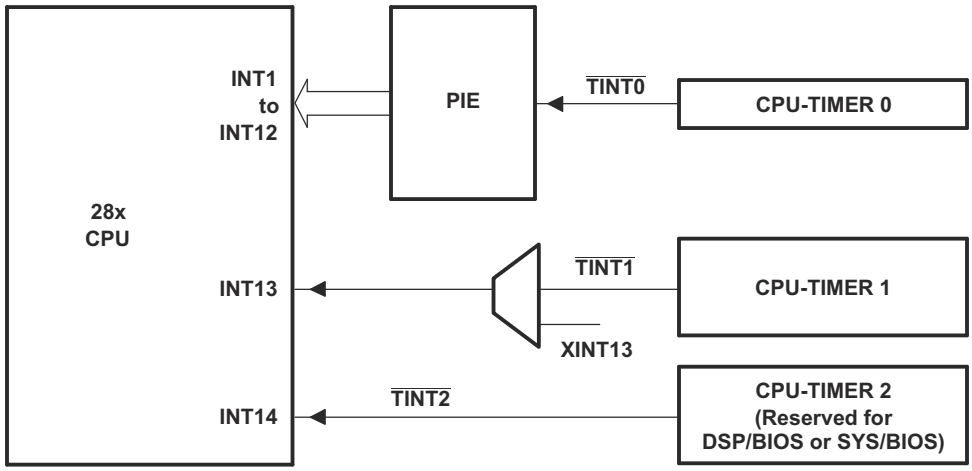

A. The timer registers are connected to the memory bus of the C28x processor.
B. The timing of the timers is synchronized to SYSCLKOUT of the processor clock.

Figure 8-3. CPU-Timer Interrupt Signals and Output Signal

The general operation of the timer is as follows: The 32-bit counter register "TIMH:TIM" is loaded with the value in the period register "PRDH:PRD". The counter register decrements at the SYSCLKOUT rate of the C28x. When the counter reaches 0, a timer interrupt output signal generates an interrupt pulse. The registers listed in Table 8-2 are used to configure the timers. For more information, see the *TMS320x2834x Delfino System Control and Interrupts Reference Guide* .

Copyright © 2021 Texas Instruments Incorporated

Table 8-2. CPU-Timers 0, 1, 2 Configuration and Control Registers

NAME	ADDRESS	SIZE (x16)	DESCRIPTION
TIMER0TIM	0x0C00	1	CPU-Timer 0, Counter Register
TIMER0TIMH	0x0C01	1	CPU-Timer 0, Counter Register High
TIMER0PRD	0x0C02	1	CPU-Timer 0, Period Register
TIMER0PRDH	0x0C03	1	CPU-Timer 0, Period Register High
TIMER0TCR	0x0C04	1	CPU-Timer 0, Control Register
Reserved	0x0C05	1	
TIMER0TPR	0x0C06	1	CPU-Timer 0, Prescale Register
TIMER0TPRH	0x0C07	1	CPU-Timer 0, Prescale Register High
TIMER1TIM	0x0C08	1	CPU-Timer 1, Counter Register
TIMER1TIMH	0x0C09	1	CPU-Timer 1, Counter Register High
TIMER1PRD	0x0C0A	1	CPU-Timer 1, Period Register
TIMER1PRDH	0x0C0B	1	CPU-Timer 1, Period Register High
TIMER1TCR	0x0C0C	1	CPU-Timer 1, Control Register
Reserved	0x0C0D	1	
TIMER1TPR	0x0C0E	1	CPU-Timer 1, Prescale Register
TIMER1TPRH	0x0C0F	1	CPU-Timer 1, Prescale Register High
TIMER2TIM	0x0C10	1	CPU-Timer 2, Counter Register
TIMER2TIMH	0x0C11	1	CPU-Timer 2, Counter Register High
TIMER2PRD	0x0C12	1	CPU-Timer 2, Period Register
TIMER2PRDH	0x0C13	1	CPU-Timer 2, Period Register High
TIMER2TCR	0x0C14	1	CPU-Timer 2, Control Register
Reserved	0x0C15	1	
TIMER2TPR	0x0C16	1	CPU-Timer 2, Prescale Register
TIMER2TPRH	0x0C17	1	CPU-Timer 2, Prescale Register High
Reserved	0x0C18 – 0x0C3F	40	

Copyright © 2021 Texas Instruments Incorporated

8.2.3 Enhanced PWM Modules

The devices contain up to nine enhanced PWM (ePWM) modules (ePWM1 to ePWM9). Figure 8-4 shows a block diagram of multiple ePWM modules. Figure 8-5 shows the signal interconnections with the ePWM.

Table 8-3 and Table 8-4 show the complete ePWM register set per module .

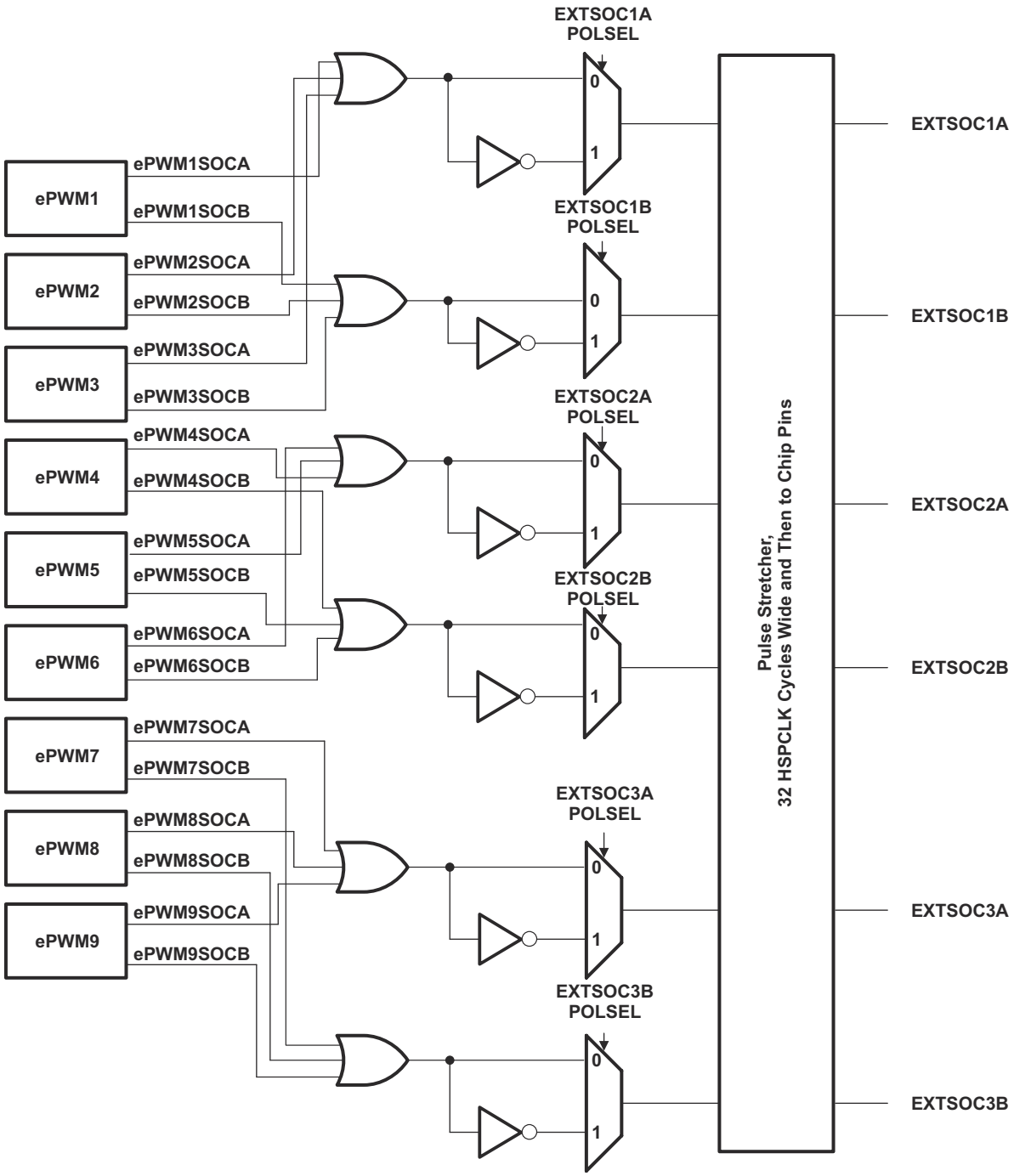

Figure 8-4. Generation of SOC Pulses to the External ADC Module

Copyright © 2021 Texas Instruments Incorporated

Table 8-3. ePWM1–ePWM4 Control and Status Registers

NAME	ePWM1	ePWM2	ePWM3	ePWM4	SIZE (x16) / #SHADOW	DESCRIPTION
TBCTL	0x6800	0x6840	0x6880	0x68C0	1 / 0	Time Base Control Register
TBSTS	0x6801	0x6841	0x6881	0x68C1	1 / 0	Time Base Status Register
TBPHSHR	0x6802	0x6842	0x6882	0x68C2	1 / 0	Time Base Phase HRPWM Register
TBPHS	0x6803	0x6843	0x6883	0x68C3	1 / 0	Time Base Phase Register
TBCTR	0x6804	0x6844	0x6884	0x68C4	1 / 0	Time Base Counter Register
TBPRD	0x6805	0x6845	0x6885	0x68C5	1 / 1	Time Base Period Register Set
CMPCTL	0x6807	0x6847	0x6887	0x68C7	1 / 0	Counter Compare Control Register
CMPAHR	0x6808	0x6848	0x6888	0x68C8	1 / 1	Time Base Compare A HRPWM Register
CMPA	0x6809	0x6849	0x6889	0x68C9	1 / 1	Counter Compare A Register Set
CMPB	0x680A	0x684A	0x688A	0x68CA	1 / 1	Counter Compare B Register Set
AQCTLA	0x680B	0x684B	0x688B	0x68CB	1 / 0	Action Qualifier Control Register For Output A
AQCTLB	0x680C	0x684C	0x688C	0x68CC	1 / 0	Action Qualifier Control Register For Output B
AQSFRC	0x680D	0x684D	0x688D	0x68CD	1 / 0	Action Qualifier Software Force Register
AQCSFRC	0x680E	0x684E	0x688E	0x68CE	1 / 1	Action Qualifier Continuous S/W Force Register Set
DBCTL	0x680F	0x684F	0x688F	0x68CF	1 / 1	Dead-Band Generator Control Register
DBRED	0x6810	0x6850	0x6890	0x68D0	1 / 0	Dead-Band Generator Rising Edge Delay Count Register
DBFED	0x6811	0x6851	0x6891	0x68D1	1 / 0	Dead-Band Generator Falling Edge Delay Count Register
TZSEL	0x6812	0x6852	0x6892	0x68D2	1 / 0	Trip Zone Select Register(1)
TZCTL	0x6814	0x6854	0x6894	0x68D4	1 / 0	Trip Zone Control Register(1)
TZEINT	0x6815	0x6855	0x6895	0x68D5	1 / 0	Trip Zone Enable Interrupt Register(1)
TZFLG	0x6816	0x6856	0x6896	0x68D6	1 / 0	Trip Zone Flag Register
TZCLR	0x6817	0x6857	0x6897	0x68D7	1 / 0	Trip Zone Clear Register(1)
TZFRC	0x6818	0x6858	0x6898	0x68D8	1 / 0	Trip Zone Force Register(1)
ETSEL	0x6819	0x6859	0x6899	0x68D9	1 / 0	Event Trigger Selection Register
ETPS	0x681A	0x685A	0x689A	0x68DA	1 / 0	Event Trigger Prescale Register
ETFLG	0x681B	0x685B	0x689B	0x68DB	1 / 0	Event Trigger Flag Register
ETCLR	0x681C	0x685C	0x689C	0x68DC	1 / 0	Event Trigger Clear Register
ETFRC	0x681D	0x685D	0x689D	0x68DD	1 / 0	Event Trigger Force Register
PCCTL	0x681E	0x685E	0x689E	0x68DE	1 / 0	PWM Chopper Control Register
HRCNFG	0x6820	0x6860	0x68A0	0x68E0	1 / 0	HRPWM Configuration Register(1)

(1) Registers that are EALLOW protected.

Table 8-4. ePWM5–ePWM9 Control and Status Registers

NAME	ePWM5	ePWM6	ePWM7	ePWM8	ePWM9	SIZE (x16) / #SHADOW	DESCRIPTION
TBCTL	0x6900	0x6940	0x6980	0x69C0	0x6600	1 / 0	Time Base Control Register
TBSTS	0x6901	0x6941	0x6981	0x69C1	0x6601	1 / 0	Time Base Status Register
TBPHSHR	0x6902	0x6942	0x6982	0x69C2	0x6602	1 / 0	Time Base Phase HRPWM Register
TBPHS	0x6903	0x6943	0x6983	0x69C3	0x6603	1 / 0	Time Base Phase Register
TBCTR	0x6904	0x6944	0x6984	0x69C4	0x6604	1 / 0	Time Base Counter Register
TBPRD	0x6905	0x6945	0x6985	0x69C5	0x6605	1 / 1	Time Base Period Register Set
CMPCTL	0x6907	0x6947	0x6987	0x69C7	0x6607	1 / 0	Counter Compare Control Register
CMPAHR	0x6908	0x6948	0x6988	0x69C8	0x6608	1 / 1	Time Base Compare A HRPWM Register

Copyright © 2021 Texas Instruments Incorporated

Table 8-4. ePWM5–ePWM9 Control and Status Registers (continued)

NAME	ePWM5	ePWM6	ePWM7	ePWM8	ePWM9	SIZE (x16) / #SHADOW	DESCRIPTION
CMPA	0x6909	0x6949	0x6989	0x69C9	0x6609	1 / 1	Counter Compare A Register Set
CMPB	0x690A	0x694A	0x698A	0x69CA	0x660A	1 / 1	Counter Compare B Register Set
AQCTLA	0x690B	0x694B	0x698B	0x69CB	0x660B	1 / 0	Action Qualifier Control Register For Output A
AQCTLB	0x690C	0x694C	0x698C	0x69CC	0x660C	1 / 0	Action Qualifier Control Register For Output B
AQSFRC	0x690D	0x694D	0x698D	0x69CD	0x660D	1 / 0	Action Qualifier Software Force Register
AQCSFRC	0x690E	0x694E	0x698E	0x69CE	0x660E	1 / 1	Action Qualifier Continuous S/W Force Register Set
DBCTL	0x690F	0x694F	0x698F	0x69CF	0x660F	1 / 1	Dead-Band Generator Control Register
DBRED	0x6910	0x6950	0x6990	0x69D0	0x6610	1 / 0	Dead-Band Generator Rising Edge Delay Count Register
DBFED	0x6911	0x6951	0x6991	0x69D1	0x6611	1 / 0	Dead-Band Generator Falling Edge Delay Count Register
TZSEL	0x6912	0x6952	0x6992	0x69D2	0x6612	1 / 0	Trip Zone Select Register(1)
TZCTL	0x6914	0x6954	0x6994	0x69D4	0x6614	1 / 0	Trip Zone Control Register(1)
TZEINT	0x6915	0x6955	0x6995	0x69D5	0x6615	1 / 0	Trip Zone Enable Interrupt Register(1)
TZFLG	0x6916	0x6956	0x6996	0x69D6	0x6616	1 / 0	Trip Zone Flag Register
TZCLR	0x6917	0x6957	0x6997	0x69D7	0x6617	1 / 0	Trip Zone Clear Register(1)
TZFRC	0x6918	0x6958	0x6998	0x69D8	0x6618	1 / 0	Trip Zone Force Register(1)
ETSEL	0x6919	0x6959	0x6999	0x69D9	0x6619	1 / 0	Event Trigger Selection Register
ETPS	0x691A	0x695A	0x699A	0x69DA	0x661A	1 / 0	Event Trigger Prescale Register
ETFLG	0x691B	0x695B	0x699B	0x69DB	0x661B	1 / 0	Event Trigger Flag Register
ETCLR	0x691C	0x695C	0x699C	0x69DC	0x661C	1 / 0	Event Trigger Clear Register
ETFRC	0x691D	0x695D	0x699D	0x69DD	0x661D	1 / 0	Event Trigger Force Register
PCCTL	0x691E	0x695E	0x699E	0x69DE	0x661E	1 / 0	PWM Chopper Control Register
HRCNFG	0x6920	0x6960	0x69A0	0x69E0	0x6620	1 / 0	HRPWM Configuration Register(1)

(1) Registers that are EALLOW protected.

Copyright © 2021 Texas Instruments Incorporated

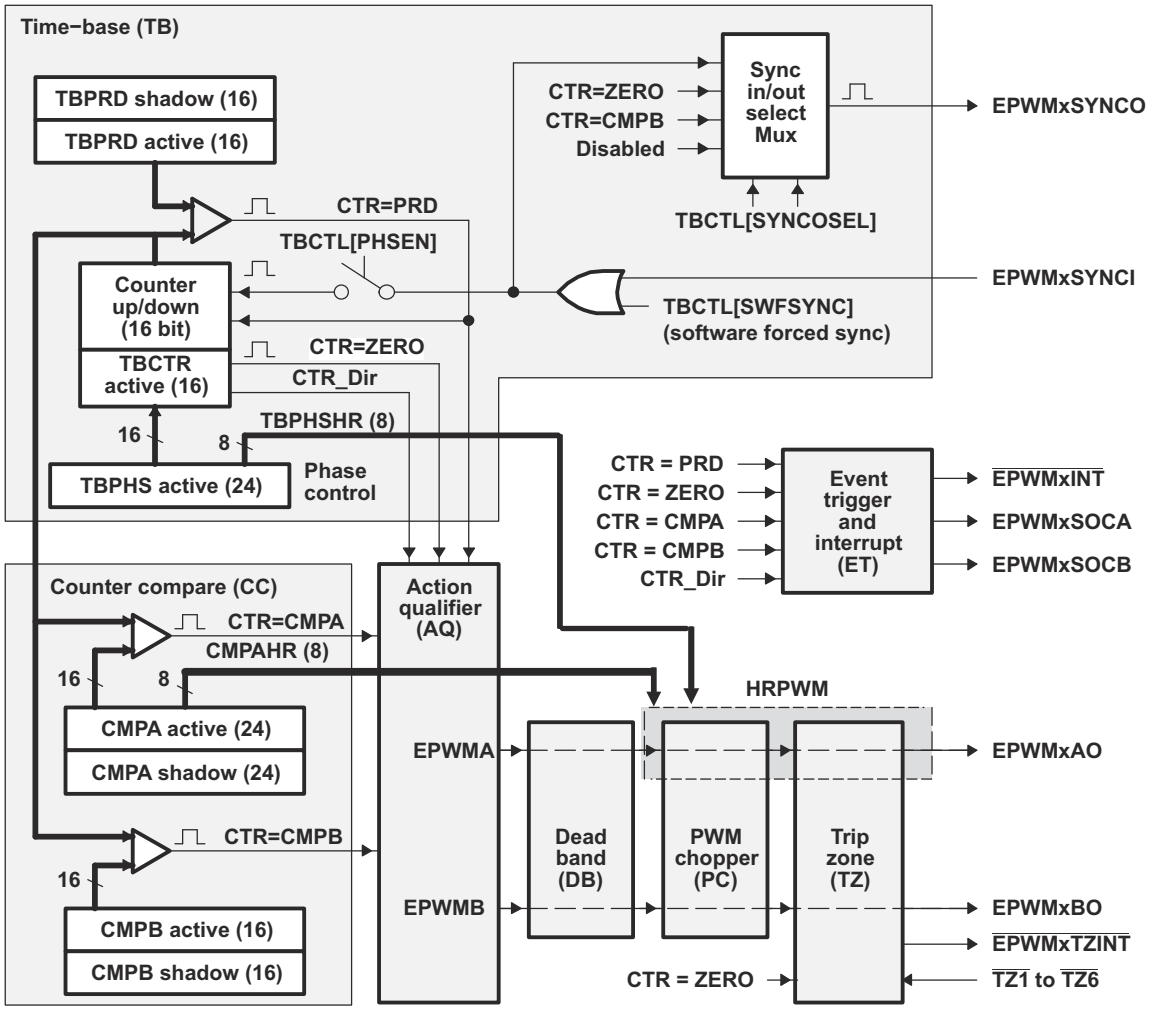

Figure 8-5. ePWM Submodules Showing Critical Internal Signal Interconnections

8.2.4 High-Resolution PWM (HRPWM)

The HRPWM module offers PWM resolution (time granularity) which is significantly better than what can be achieved using conventionally derived digital PWM methods. The key points for the HRPWM module are:

- Significantly extends the time resolution capabilities of conventionally derived digital PWM
- Typically used when effective PWM resolution falls below approximately 9 or 10 bits. This occurs at PWM frequencies greater than approximately 500 kHz when using a CPU/System clock of 300 MHz or approximately 375 kHz when using a CPU/system clock of 200 MHz.
- This capability can be used in both duty cycle and phase-shift control methods.
- Finer time granularity control or edge positioning is controlled through extensions to the Compare A and Phase registers of the ePWM module.
- HRPWM capabilities are offered only on the A signal path of an ePWM module (that is, on the EPWMxA output). EPWMxB output has conventional PWM capabilities.

Copyright © 2021 Texas Instruments Incorporated

8.2.5 Enhanced CAP Modules

The device contains up to six enhanced capture (eCAP) modules (eCAP1 to eCAP6). Figure 8-6 shows a functional block diagram of a module.

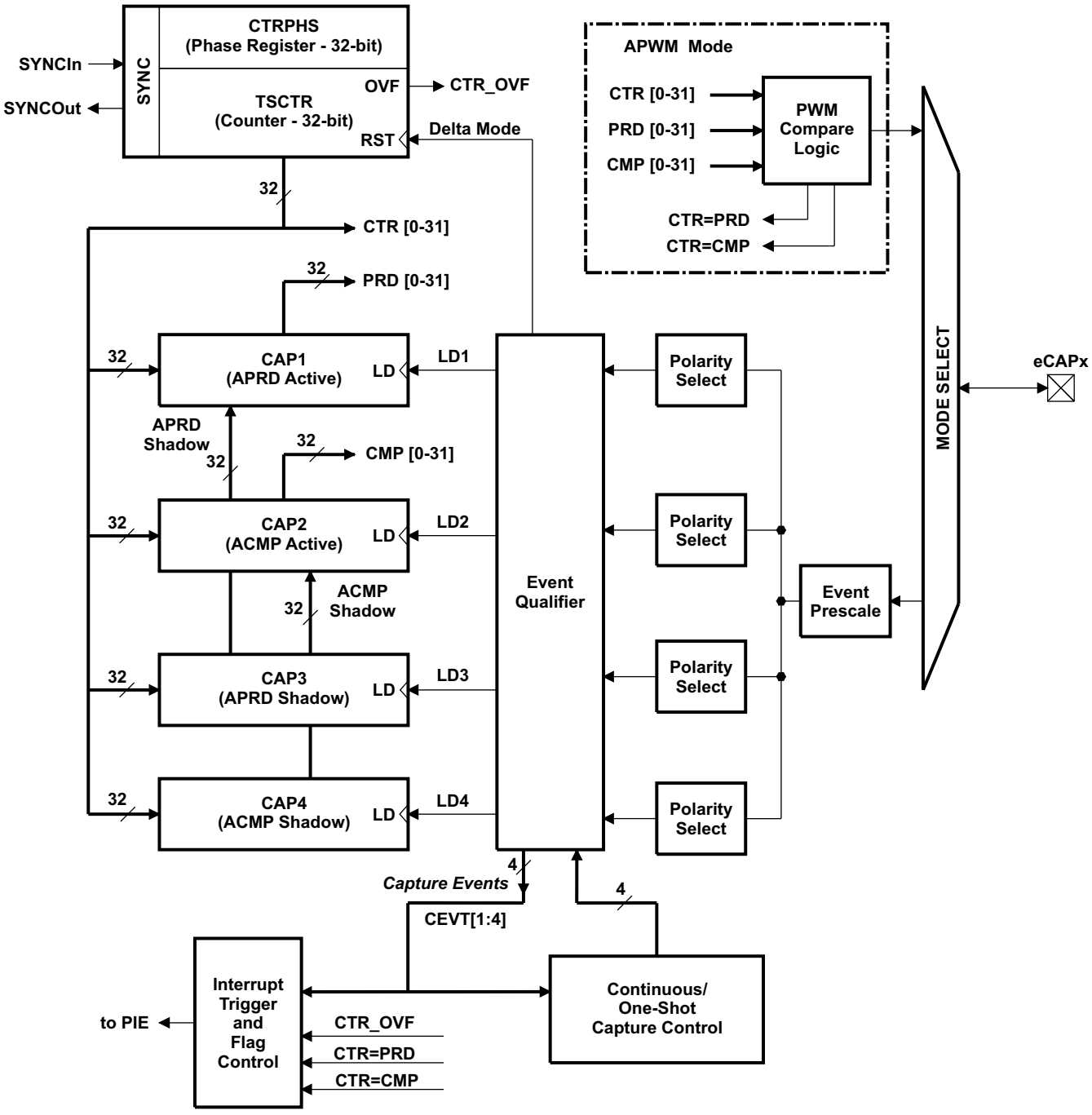

Figure 8-6. eCAP Functional Block Diagram

Copyright © 2021 Texas Instruments Incorporated

The eCAP modules are clocked at the SYSCLKOUT rate.

The clock enable bits (ECAP1ENCLK, ECAP2ENCLK, ECAP3ENCLK, ECAP4ENCLK, ECAP5ENCLK, ECAP6ENCLK) in the PCLKCR1 register are used to turn off the eCAP modules individually (for low power operation). Upon reset, ECAP1ENCLK, ECAP2ENCLK, ECAP3ENCLK, ECAP4ENCLK, ECAP5ENCLK, and ECAP6ENCLK are set to low, indicating that the peripheral clock is off.

Table 8-5. eCAP Control and Status Registers

NAME	eCAP1	eCAP2	eCAP3	eCAP4	eCAP5	eCAP6	SIZE (x16)	DESCRIPTION
TSCTR	0x6A00	0x6A20	0x6A40	0x6A60	0x6A80	0x6AA0	2	Timestamp Counter
CTRPHS	0x6A02	0x6A22	0x6A42	0x6A62	0x6A82	0x6AA2	2	Counter Phase Offset Value Register
CAP1	0x6A04	0x6A24	0x6A44	0x6A64	0x6A84	0x6AA4	2	Capture 1 Register
CAP2	0x6A06	0x6A26	0x6A46	0x6A66	0x6A86	0x6AA6	2	Capture 2 Register
CAP3	0x6A08	0x6A28	0x6A48	0x6A68	0x6A88	0x6AA8	2	Capture 3 Register
CAP4	0x6A0A	0x6A2A	0x6A4A	0x6A6A	0x6A8A	0x6AAA	2	Capture 4 Register
Reserved	0x6A0C-0x6A12	0x6A2C-0x6A32	0x6A4C-0x6A52	0x6A6C-0x6A72	0x6A8C-0x6A92	0x6AAC-0x6AB2	8	Reserved
ECCTL1	0x6A14	0x6A34	0x6A54	0x6A74	0x6A94	0x6AB4	1	Capture Control Register 1
ECCTL2	0x6A15	0x6A35	0x6A55	0x6A75	0x6A95	0x6AB5	1	Capture Control Register 2
ECEINT	0x6A16	0x6A36	0x6A56	0x6A76	0x6A96	0x6AB6	1	Capture Interrupt Enable Register
ECFLG	0x6A17	0x6A37	0x6A57	0x6A77	0x6A97	0x6AB7	1	Capture Interrupt Flag Register
ECCLR	0x6A18	0x6A38	0x6A58	0x6A78	0x6A98	0x6AB8	1	Capture Interrupt Clear Register
ECFRC	0x6A19	0x6A39	0x6A59	0x6A79	0x6A99	0x6AB9	1	Capture Interrupt Force Register
Reserved	0x6A1A-0x6A1F	0x6A3A-0x6A3F	0x6A5A-0x6A5F	0x6A7A-0x6A7F	0x6A9A-0x6A9F	0x6ABA-0x6ABF	6	Reserved

8.2.6 Enhanced QEP Modules

The device contains up to three enhanced quadrature encoder (eQEP) modules with 32-bit resolution (eQEP1, eQEP2, eQEP3). Figure 8-7 shows the block diagram of the eQEP module.

Copyright © 2021 Texas Instruments Incorporated

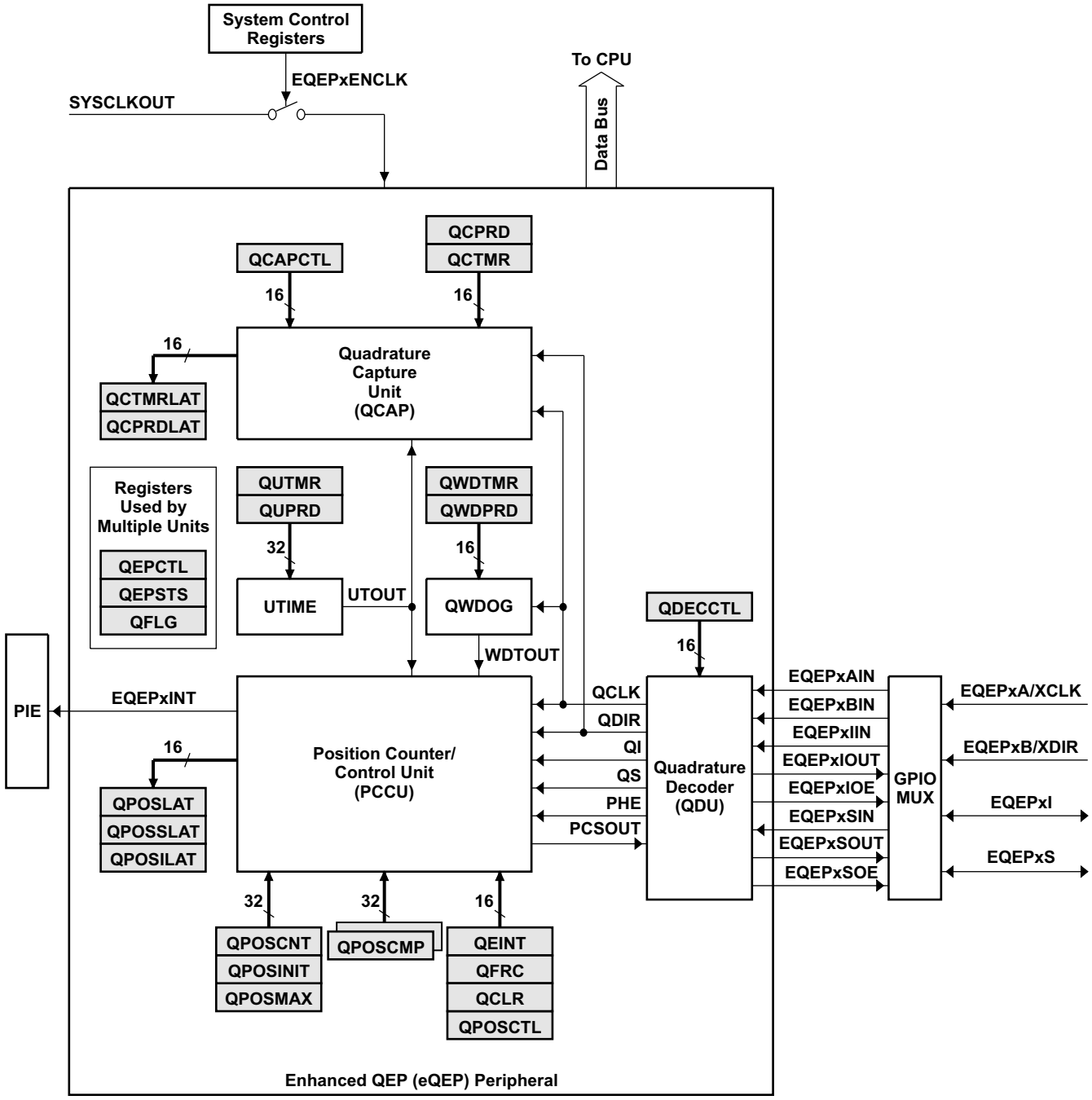

Figure 8-7. eQEP Functional Block Diagram

Copyright © 2021 Texas Instruments Incorporated

Table 8-6 provides a summary of the eQEP registers.

Table 8-6. eQEP Control and Status Registers

NAME	eQEP1 ADDRESS	eQEP2 ADDRESS	eQEP3 ADDRESS	eQEPx SIZE(x16)/ #SHADOW	REGISTER DESCRIPTION
QPOSCNT	0x6B00	0x6B40	0x6B80	2/0	eQEP Position Counter
QPOSINIT	0x6B02	0x6B42	0x6B82	2/0	eQEP Initialization Position Count
QPOSMAX	0x6B04	0x6B44	0x6B84	2/0	eQEP Maximum Position Count
QPOSCMP	0x6B06	0x6B46	0x6B86	2/1	eQEP Position-compare
QPOSILAT	0x6B08	0x6B48	0x6B88	2/0	eQEP Index Position Latch
QPOSSLAT	0x6B0A	0x6B4A	0x6B8A	2/0	eQEP Strobe Position Latch
QPOSLAT	0x6B0C	0x6B4C	0x6B8C	2/0	eQEP Position Latch
QUTMR	0x6B0E	0x6B4E	0x6B8E	2/0	eQEP Unit Timer
QUPRD	0x6B10	0x6B50	0x6B90	2/0	eQEP Unit Period Register
QWDTMR	0x6B12	0x6B52	0x6B92	1/0	eQEP Watchdog Timer
QWDPRD	0x6B13	0x6B53	0x6B93	1/0	eQEP Watchdog Period Register
QDECCTL	0x6B14	0x6B54	0x6B94	1/0	eQEP Decoder Control Register
QEPCTL	0x6B15	0x6B55	0x6B95	1/0	eQEP Control Register
QCAPCTL	0x6B16	0x6B56	0x6B96	1/0	eQEP Capture Control Register
QPOSCTL	0x6B17	0x6B57	0x6B97	1/0	eQEP Position-compare Control Register
QEINT	0x6B18	0x6B58	0x6B98	1/0	eQEP Interrupt Enable Register
QFLG	0x6B19	0x6B59	0x6B99	1/0	eQEP Interrupt Flag Register
QCLR	0x6B1A	0x6B5A	0x6B9A	1/0	eQEP Interrupt Clear Register
QFRC	0x6B1B	0x6B5B	0x6B9B	1/0	eQEP Interrupt Force Register
QEPSTS	0x6B1C	0x6B5C	0x6B9C	1/0	eQEP Status Register
QCTMR	0x6B1D	0x6B5D	0x6B9D	1/0	eQEP Capture Timer
QCPRD	0x6B1E	0x6B5E	0x6B9E	1/0	eQEP Capture Period Register
QCTMRLAT	0x6B1F	0x6B5F	0x6B9F	1/0	eQEP Capture Timer Latch
QCPRDLAT	0x6B20	0x6B60	0x6BA0	1/0	eQEP Capture Period Latch
Reserved	0x6B21 - 0x6B3F	0x6B61 - 0x6B7F	0x6BBA1 - 0x6BBF	31/0	

8.2.7 External ADC Interface

The external ADC interface operation is configured, controlled, and monitored by the External SoC Configuration Register (EXTSOCCFG) at address 0x702E. Figure 8-8 shows how the Start-of-Conversion signals for external ADCs are generated by the on-chip PWM modules.

Copyright © 2021 Texas Instruments Incorporated

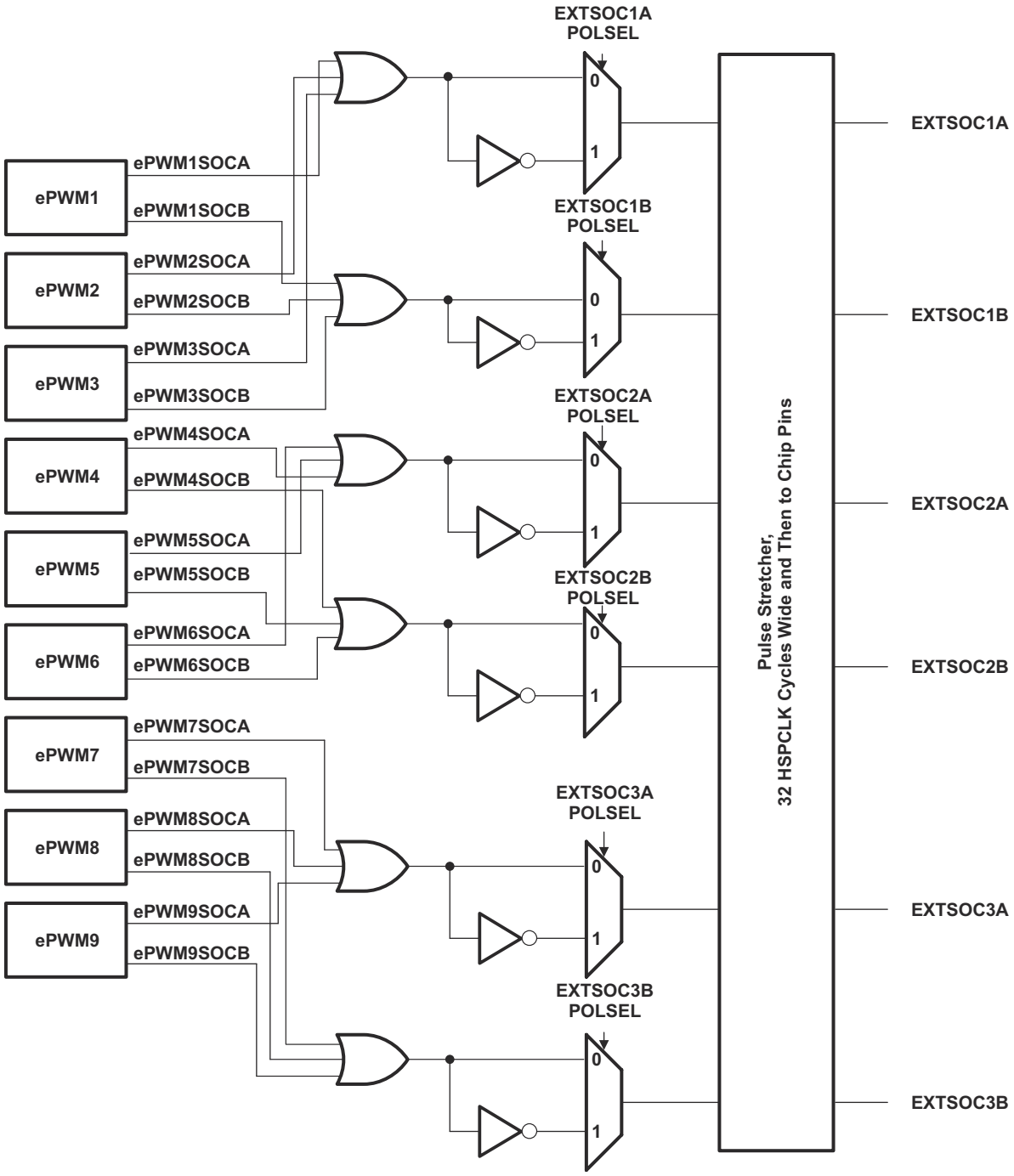

Figure 8-8. External ADC Interface

Table 8-7. External ADC Interface Registers

NAME	DESCRIPTION	ADDRESS
EXTSOCCFG	External SoC Configuration Register	0x00 702E

8.2.8 Multichannel Buffered Serial Port (McBSP) Module

The McBSP module has the following features:

- Compatible to McBSP in TMS320C54x/TMS320C55x DSP devices
- Full-duplex communication

Copyright © 2021 Texas Instruments Incorporated

- Double-buffered data registers that allow a continuous data stream
- Independent framing and clocking for receive and transmit
- External shift clock generation or an internal programmable frequency shift clock
- A wide selection of data sizes including 8, 12, 16, 20, 24, or 32 bits
- 8-bit data transfers with LSB or MSB first
- Programmable polarity for both frame synchronization and data clocks
- Highly programmable internal clock and frame generation
- Direct interface to industry-standard CODECs, Analog Interface Chips (AICs), and other serially connected A/D and D/A devices
- Works with SPI-compatible devices
- The following application interfaces can be supported on the McBSP:
  - T1/E1 framers
  - IOM-2 compliant devices
  - AC97-compliant devices (the necessary multiphase frame synchronization capability is provided.)
  - IIS-compliant devices
  - SPI
- McBSP clock rate,

$$CLKG = \frac{CLKSRG}{(1 + CLKGDV)}$$

where CLKSRG source could be LSPCLK, CLKX, or CLKR. Serial port performance is limited by I/O buffer switching speed. Internal prescalers must be adjusted such that the peripheral speed is less than the I/O buffer speed limit.

Note

See Section 7 for maximum I/O pin toggling speed.

Figure 8-9 shows the block diagram of the McBSP module.

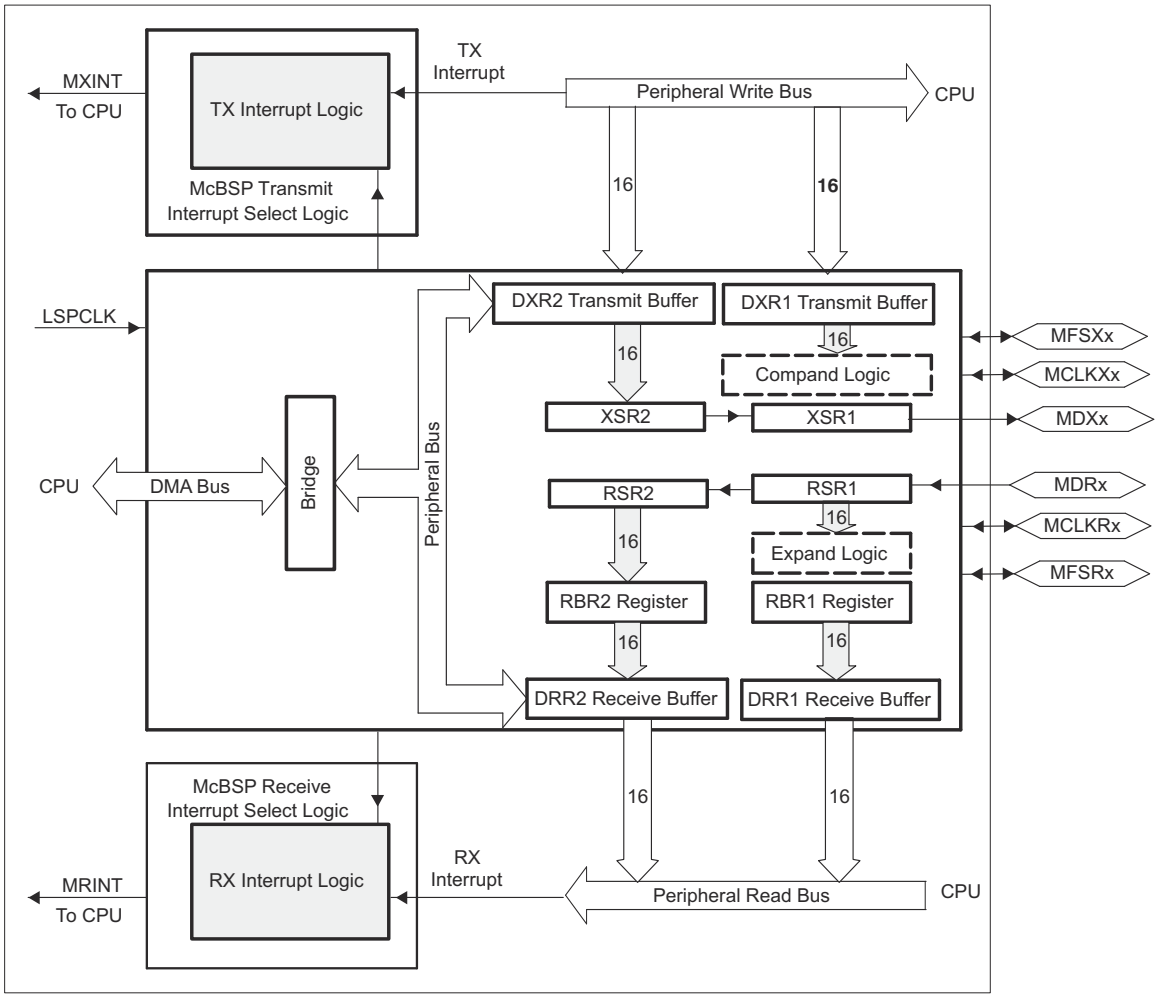

Figure 8-9. McBSP Module

Copyright © 2021 Texas Instruments Incorporated

Table 8-8 provides a summary of the McBSP registers.

Table 8-8. McBSP Register Summary

NAME	McBSP-A ADDRESS	McBSP-B ADDRESS	TYPE	RESET VALUE	DESCRIPTION
Data Registers, Receive, Transmit					
DRR2	0x5000	0x5040	R	0x0000	McBSP Data Receive Register 2
DRR1	0x5001	0x5041	R	0x0000	McBSP Data Receive Register 1
DXR2	0x5002	0x5042	W	0x0000	McBSP Data Transmit Register 2
DXR1	0x5003	0x5043	W	0x0000	McBSP Data Transmit Register 1
McBSP Control Registers					
SPCR2	0x5004	0x5044	R/W	0x0000	McBSP Serial Port Control Register 2
SPCR1	0x5005	0x5045	R/W	0x0000	McBSP Serial Port Control Register 1
RCR2	0x5006	0x5046	R/W	0x0000	McBSP Receive Control Register 2
RCR1	0x5007	0x5047	R/W	0x0000	McBSP Receive Control Register 1
XCR2	0x5008	0x5048	R/W	0x0000	McBSP Transmit Control Register 2
XCR1	0x5009	0x5049	R/W	0x0000	McBSP Transmit Control Register 1
SRGR2	0x500A	0x504A	R/W	0x0000	McBSP Sample Rate Generator Register 2
SRGR1	0x500B	0x504B	R/W	0x0000	McBSP Sample Rate Generator Register 1
Multichannel Control Registers					
MCR2	0x500C	0x504C	R/W	0x0000	McBSP Multichannel Register 2
MCR1	0x500D	0x504D	R/W	0x0000	McBSP Multichannel Register 1
RCERA	0x500E	0x504E	R/W	0x0000	McBSP Receive Channel Enable Register Partition A
RCERB	0x500F	0x504F	R/W	0x0000	McBSP Receive Channel Enable Register Partition B
XCERA	0x5010	0x5050	R/W	0x0000	McBSP Transmit Channel Enable Register Partition A
XCERB	0x5011	0x5051	R/W	0x0000	McBSP Transmit Channel Enable Register Partition B
PCR	0x5012	0x5052	R/W	0x0000	McBSP Pin Control Register
RCERC	0x5013	0x5053	R/W	0x0000	McBSP Receive Channel Enable Register Partition C
RCERD	0x5014	0x5054	R/W	0x0000	McBSP Receive Channel Enable Register Partition D
XCERC	0x5015	0x5055	R/W	0x0000	McBSP Transmit Channel Enable Register Partition C
XCERD	0x5016	0x5056	R/W	0x0000	McBSP Transmit Channel Enable Register Partition D
RCERE	0x5017	0x5057	R/W	0x0000	McBSP Receive Channel Enable Register Partition E
RCERF	0x5018	0x5058	R/W	0x0000	McBSP Receive Channel Enable Register Partition F
XCERE	0x5019	0x5059	R/W	0x0000	McBSP Transmit Channel Enable Register Partition E
XCERF	0x501A	0x505A	R/W	0x0000	McBSP Transmit Channel Enable Register Partition F
RCERG	0x501B	0x505B	R/W	0x0000	McBSP Receive Channel Enable Register Partition G
RCERH	0x501C	0x505C	R/W	0x0000	McBSP Receive Channel Enable Register Partition H
XCERG	0x501D	0x505D	R/W	0x0000	McBSP Transmit Channel Enable Register Partition G
XCERH	0x501E	0x505E	R/W	0x0000	McBSP Transmit Channel Enable Register Partition H
MFFINT	0x5023	0x5063	R/W	0x0000	McBSP Interrupt Enable Register
MFFST	0x5024	0x5064	R/W	0x0000	McBSP Pin Status Register

Copyright © 2021 Texas Instruments Incorporated

8.2.9 Enhanced Controller Area Network (eCAN) Modules (eCAN-A and eCAN-B)

The CAN module has the following features:

- Fully compliant with ISO 11898-1 (CAN 2.0B)
- Supports data rates up to 1 Mbps
- Thirty-two mailboxes, each with the following properties:
  - Configurable as receive or transmit
  - Configurable with standard or extended identifier
  - Has a programmable receive mask
  - Supports data and remote frame
  - Composed of 0 to 8 bytes of data
  - Uses a 32-bit timestamp on receive and transmit message
  - Protects against reception of new message
  - Holds the dynamically programmable priority of transmit message
  - Employs a programmable interrupt scheme with two interrupt levels
  - Employs a programmable alarm on transmission or reception time-out
- Low-power mode
- Programmable wake-up on bus activity
- Automatic reply to a remote request message
- Automatic retransmission of a frame in case of loss of arbitration or error
- 32-bit local network time counter synchronized by a specific message (communication in conjunction with mailbox 16)
- Self-test mode
  - Operates in a loopback mode receiving its own message. A "dummy" acknowledge is provided, thereby eliminating the need for another node to provide the acknowledge bit.

Note

For a SYSCLKOUT of 300 MHz, the smallest bit rate possible is 11.719 kbps.

For a SYSCLKOUT of 200 MHz, the smallest bit rate possible is 7.8125 kbps.

The CAN has passed the conformance test per ISO/DIS 16845. Contact TI for test report and exceptions.

Copyright © 2021 Texas Instruments Incorporated

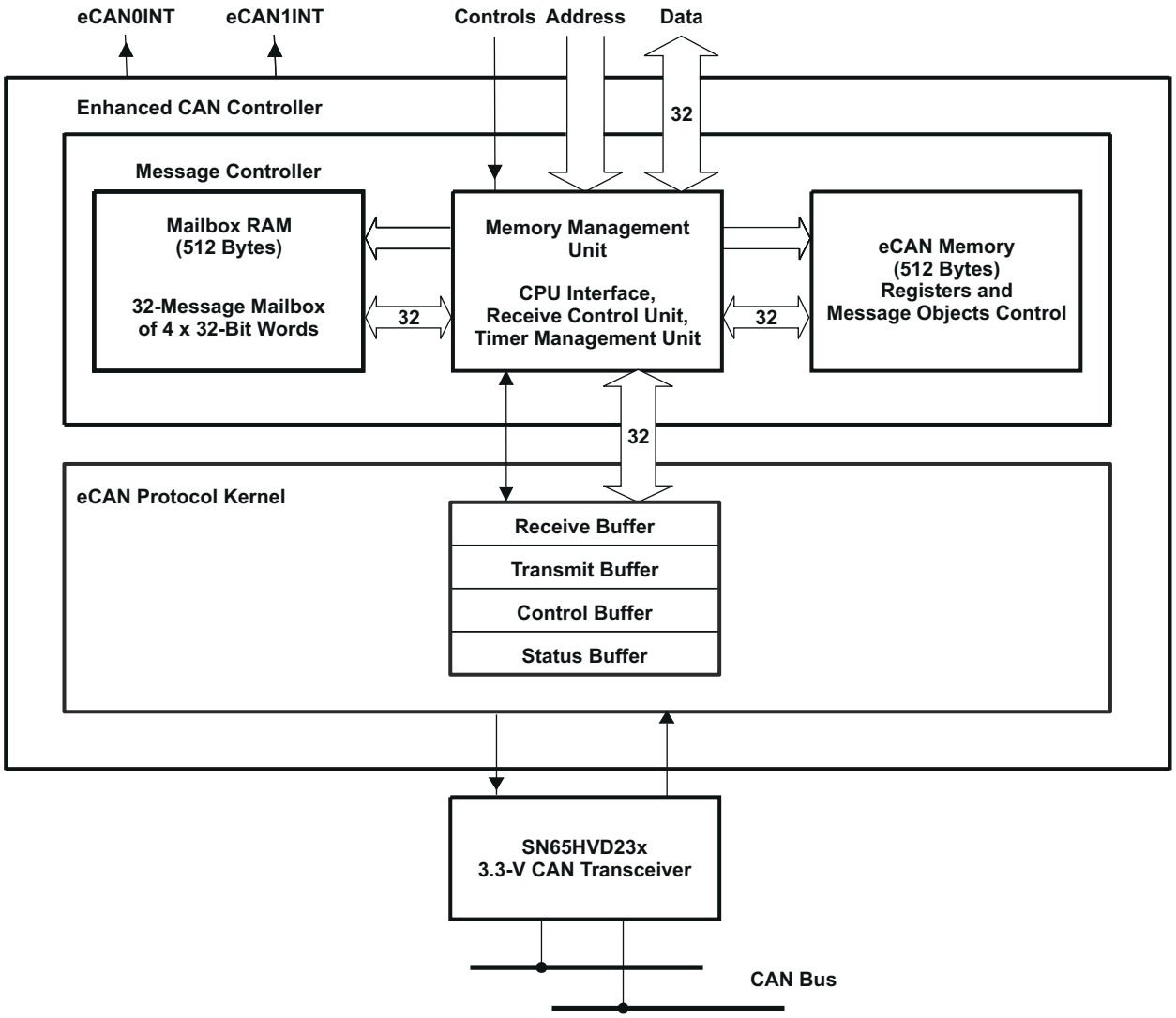

Figure 8-10. eCAN Block Diagram and Interface Circuit

Table 8-9. 3.3-V eCAN Transceivers

PART NUMBER	SUPPLY VOLTAGE	LOW-POWER MODE	SLOPE CONTROL	VREF	OTHER	T_A
SN65HVD230Q	3.3 V	Standby	Adjustable	Yes	–	–40°C to 125°C
SN65HVD231Q	3.3 V	Sleep	Adjustable	Yes	–	–40°C to 125°C
SN65HVD232Q	3.3 V	None	None	None	–	–40°C to 125°C
SN65HVD233	3.3 V	Standby	Adjustable	None	Diagnostic Loopback	–40°C to 125°C
SN65HVD234	3.3 V	Standby and Sleep	Adjustable	None	–	–40°C to 125°C
SN65HVD235	3.3 V	Standby	Adjustable	None	Autobaud Loopback	–40°C to 125°C
ISO1050	3–5.5 V	None	None	None	• Built-in isolation • Low-prop delay • Thermal shutdown • Fail-safe operation • Dominant time-out	–55°C to 105°C

Copyright © 2021 Texas Instruments Incorporated

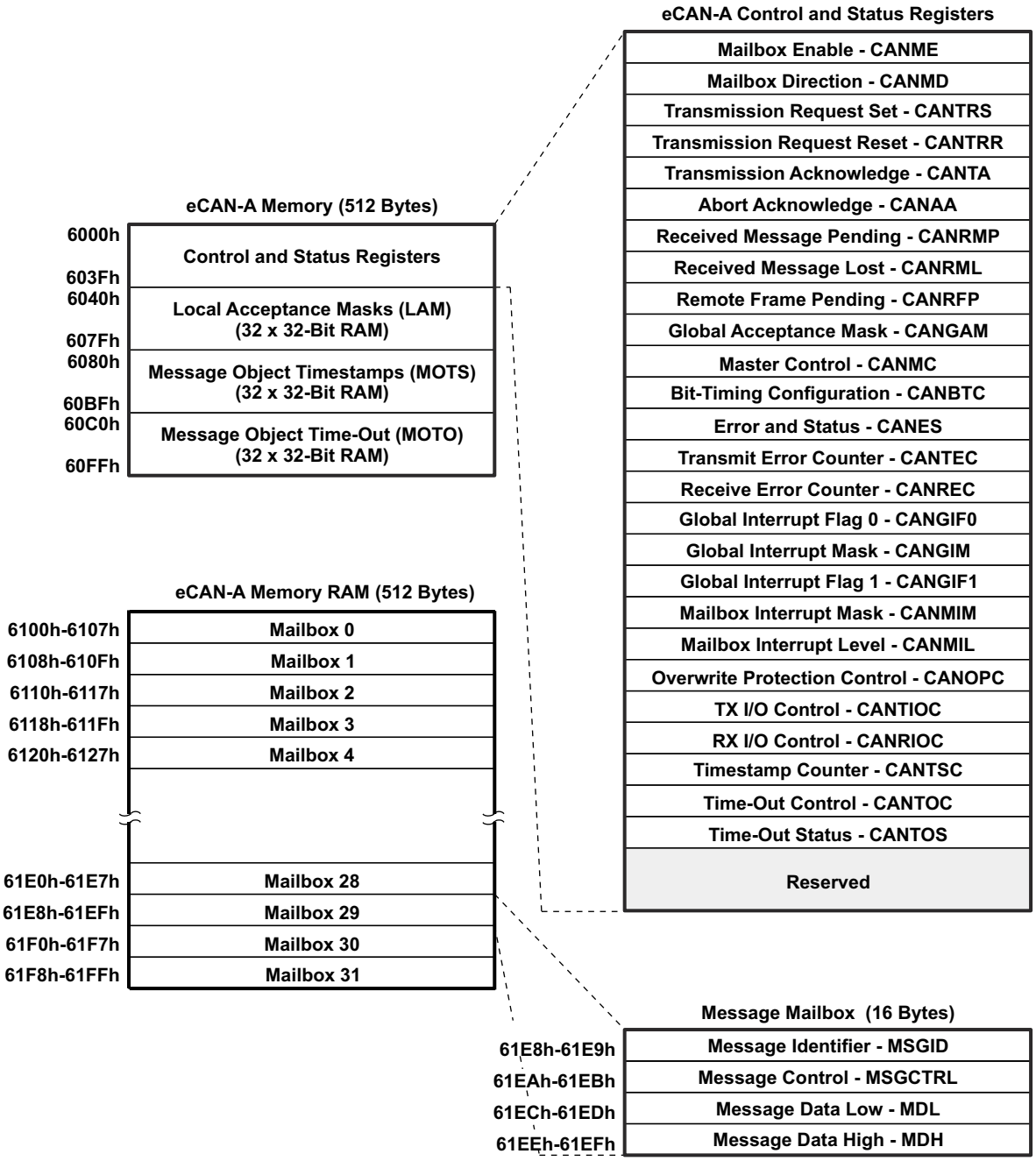

Figure 8-11. eCAN-A Memory Map

Note

If the eCAN module is not used in an application, the RAM available (LAM, MOTS, MOTO, and mailbox RAM) can be used as general-purpose RAM. The CAN module clock should be enabled for this.

Copyright © 2021 Texas Instruments Incorporated

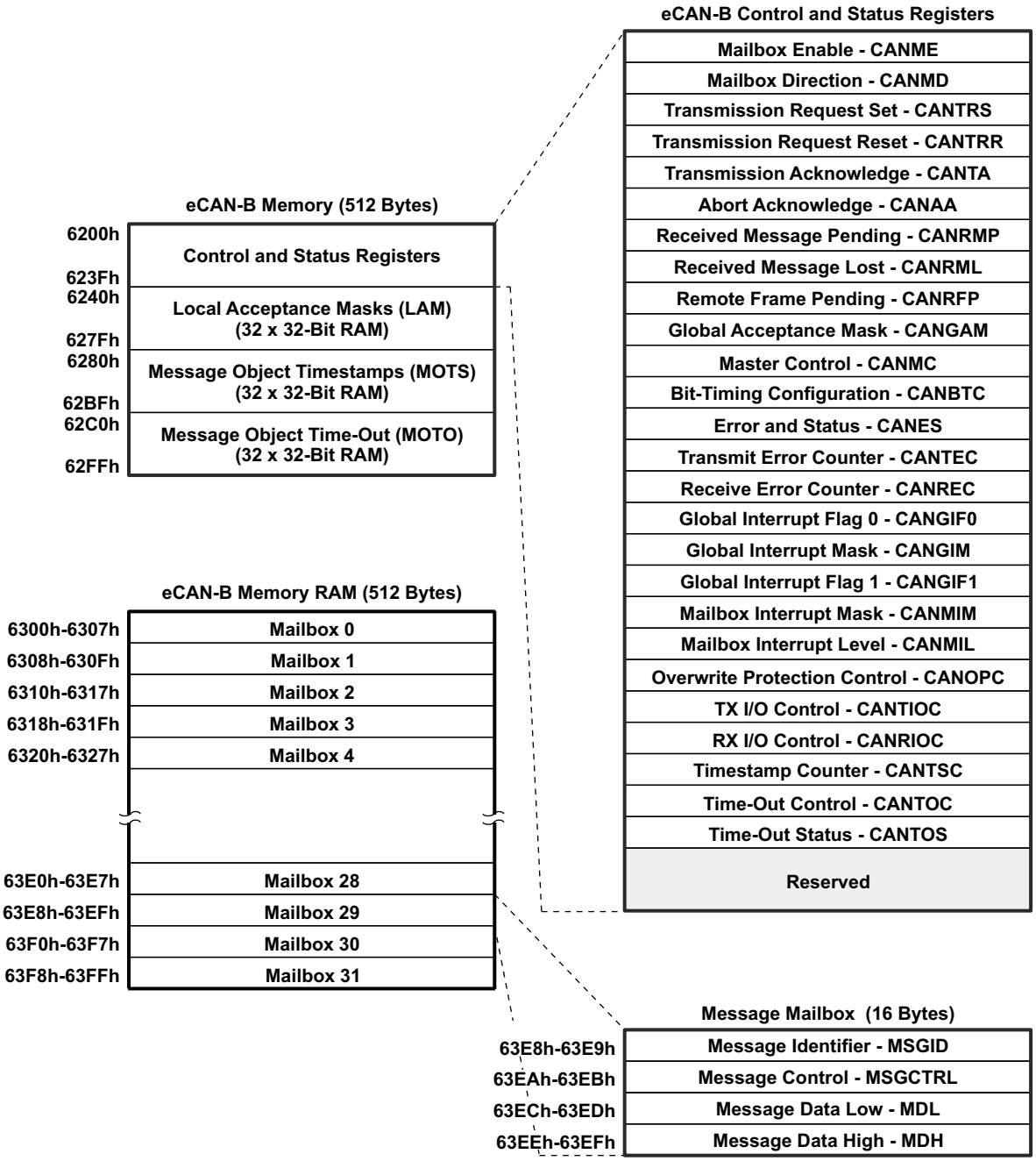

Figure 8-12. eCAN-B Memory Map

The CAN registers listed in Table 8-10 are used by the CPU to configure and control the CAN controller and the message objects. eCAN control registers only support 32-bit read/write operations. Mailbox RAM can be accessed as 16 bits or 32 bits. Thirty-two-bit accesses are aligned to an even boundary.

Table 8-10. CAN Register Map (1)

REGISTER NAME	eCAN-A ADDRESS	eCAN-B ADDRESS	SIZE (x32)	DESCRIPTION
CANME	0x6000	0x6200	1	Mailbox enable
CANMD	0x6002	0x6202	1	Mailbox direction
CANTRS	0x6004	0x6204	1	Transmit request set
CANTRR	0x6006	0x6206	1	Transmit request reset
CANTA	0x6008	0x6208	1	Transmission acknowledge
CANAA	0x600A	0x620A	1	Abort acknowledge
CANRMP	0x600C	0x620C	1	Receive message pending
CANRML	0x600E	0x620E	1	Receive message lost
CANRFP	0x6010	0x6210	1	Remote frame pending
CANGAM	0x6012	0x6212	1	Global acceptance mask
CANMC	0x6014	0x6214	1	Master control
CANBTC	0x6016	0x6216	1	Bit-timing configuration
CANES	0x6018	0x6218	1	Error and status
CANTEC	0x601A	0x621A	1	Transmit error counter
CANREC	0x601C	0x621C	1	Receive error counter
CANGIF0	0x601E	0x621E	1	Global interrupt flag 0
CANGIM	0x6020	0x6220	1	Global interrupt mask
CANGIF1	0x6022	0x6222	1	Global interrupt flag 1
CANMIM	0x6024	0x6224	1	Mailbox interrupt mask
CANMIL	0x6026	0x6226	1	Mailbox interrupt level
CANOPC	0x6028	0x6228	1	Overwrite protection control
CANTIOC	0x602A	0x622A	1	TX I/O control
CANRIOC	0x602C	0x622C	1	RX I/O control
CANTSC	0x602E	0x622E	1	Timestamp counter (Reserved in SCC mode)
CANTOC	0x6030	0x6230	1	Time-out control (Reserved in SCC mode)
CANTOS	0x6032	0x6232	1	Time-out status (Reserved in SCC mode)

(1) These registers are mapped to Peripheral Frame 1.

Copyright © 2021 Texas Instruments Incorporated

8.2.10 Serial Communications Interface (SCI) Modules (SCI-A, SCI-B, SCI-C)

The devices include three serial communications interface (SCI) modules. The SCI modules support digital communications between the CPU and other asynchronous peripherals that use the standard nonreturn-to-zero (NRZ) format. The SCI receiver and transmitter are double-buffered, and each has its own separate enable and interrupt bits. Both can be operated independently or simultaneously in the full-duplex mode. To ensure data integrity, the SCI checks received data for break detection, parity, overrun, and framing errors. The bit rate is programmable to more than 65000 different speeds through a 16-bit baud-select register.

Features of each SCI module include:

- Two external pins:
  - SCITXD: SCI transmit-output pin
  - SCIRXD: SCI receive-input pin

Note

Both pins can be used as GPIO if not used for SCI.

  - Baud rate programmable to 64K different rates:

$$\text{Baud rate} = \frac{\text{LSPCLK}}{(\text{BRR} + 1) * 8} \qquad \text{when BRR} \neq 0$$

$$\text{Baud rate} = \frac{\text{LSPCLK}}{16} \qquad \text{when BRR} = 0$$

Note

See Section 7 for maximum I/O pin toggling speed.

- Data-word format
  - One start bit
  - Data-word length programmable from one to eight bits
  - Optional even/odd/no parity bit
  - One or two stop bits
- Four error-detection flags: parity, overrun, framing, and break detection
- Two wake-up multiprocessor modes: idle-line and address bit
- Half- or full-duplex operation
- Double-buffered receive and transmit functions
- Transmitter and receiver operations can be accomplished through interrupt-driven or polled algorithms with status flags.
  - Transmitter: TXRDY flag (transmitter-buffer register is ready to receive another character) and TX EMPTY flag (transmitter-shift register is empty)
  - Receiver: RXRDY flag (receiver-buffer register is ready to receive another character), BRKDT flag (break condition occurred), and RX ERROR flag (monitoring four interrupt conditions)
- Separate enable bits for transmitter and receiver interrupts (except BRKDT)
- NRZ (nonreturn-to-zero) format

Note

All registers in this module are 8-bit registers that are connected to Peripheral Frame 2. When a register is accessed, the register data is in the lower byte (7-0), and the upper byte (15-8) is read as zeros. Writing to the upper byte has no effect.

Copyright © 2021 Texas Instruments Incorporated

Enhanced features:

- Auto baud-detect hardware logic
- 16-level transmit/receive FIFO

The SCI port operation is configured and controlled by the registers listed in Table 8-11, Table 8-12, and Table 8-13.

Table 8-11. SCI-A Registers (1)

NAME	ADDRESS	SIZE (x16)	DESCRIPTION
SCICCRA	0x7050	1	SCI-A Communications Control Register
SCICTL1A	0x7051	1	SCI-A Control Register 1
SCIHBAUDA	0x7052	1	SCI-A Baud Register, High Bits
SCILBAUDA	0x7053	1	SCI-A Baud Register, Low Bits
SCICTL2A	0x7054	1	SCI-A Control Register 2
SCIRXSTA	0x7055	1	SCI-A Receive Status Register
SCIRXEMUA	0x7056	1	SCI-A Receive Emulation Data Buffer Register
SCIRXBUFA	0x7057	1	SCI-A Receive Data Buffer Register
SCITXBUFA	0x7059	1	SCI-A Transmit Data Buffer Register
SCIFFTXA(2)	0x705A	1	SCI-A FIFO Transmit Register
SCIFFRXA(2)	0x705B	1	SCI-A FIFO Receive Register
SCIFFCTA(2)	0x705C	1	SCI-A FIFO Control Register
SCIPRIA	0x705F	1	SCI-A Priority Control Register

(1) Registers in this table are mapped to Peripheral Frame 2 space. This space only allows 16-bit accesses. 32-bit accesses produce undefined results.
(2) These registers are new registers for the FIFO mode.

Table 8-12. SCI-B Registers (1) (2)

NAME	ADDRESS	SIZE (x16)	DESCRIPTION
SCICCRB	0x7750	1	SCI-B Communications Control Register
SCICTL1B	0x7751	1	SCI-B Control Register 1
SCIHBAUDB	0x7752	1	SCI-B Baud Register, High Bits
SCILBAUDB	0x7753	1	SCI-B Baud Register, Low Bits
SCICTL2B	0x7754	1	SCI-B Control Register 2
SCIRXSTB	0x7755	1	SCI-B Receive Status Register
SCIRXEMUB	0x7756	1	SCI-B Receive Emulation Data Buffer Register
SCIRXBUFB	0x7757	1	SCI-B Receive Data Buffer Register
SCITXBUFB	0x7759	1	SCI-B Transmit Data Buffer Register
SCIFFTXB(2)	0x775A	1	SCI-B FIFO Transmit Register
SCIFFRXB(2)	0x775B	1	SCI-B FIFO Receive Register
SCIFFCTB(2)	0x775C	1	SCI-B FIFO Control Register
SCIPRIB	0x775F	1	SCI-B Priority Control Register

(1) Registers in this table are mapped to Peripheral Frame 2 space. This space only allows 16-bit accesses. 32-bit accesses produce undefined results.
(2) These registers are new registers for the FIFO mode.

Copyright © 2021 Texas Instruments Incorporated

Table 8-13. SCI-C Registers (1) (2)

NAME	ADDRESS	SIZE (x16)	DESCRIPTION
SCICCRC	0x7770	1	SCI-C Communications Control Register
SCICTL1C	0x7771	1	SCI-C Control Register 1
SCIHBAUDC	0x7772	1	SCI-C Baud Register, High Bits
SCILBAUDC	0x7773	1	SCI-C Baud Register, Low Bits
SCICTL2C	0x7774	1	SCI-C Control Register 2
SCIRXSTC	0x7775	1	SCI-C Receive Status Register
SCIRXEMUC	0x7776	1	SCI-C Receive Emulation Data Buffer Register
SCIRXBUFC	0x7777	1	SCI-C Receive Data Buffer Register
SCITXBUFC	0x7779	1	SCI-C Transmit Data Buffer Register
SCIFFTXC(2)	0x777A	1	SCI-C FIFO Transmit Register
SCIFFRXC(2)	0x777B	1	SCI-C FIFO Receive Register
SCIFFCTC(2)	0x777C	1	SCI-C FIFO Control Register
SCIPRC	0x777F	1	SCI-C Priority Control Register

Figure 8-13 shows the SCI module block diagram.

Copyright © 2021 Texas Instruments Incorporated

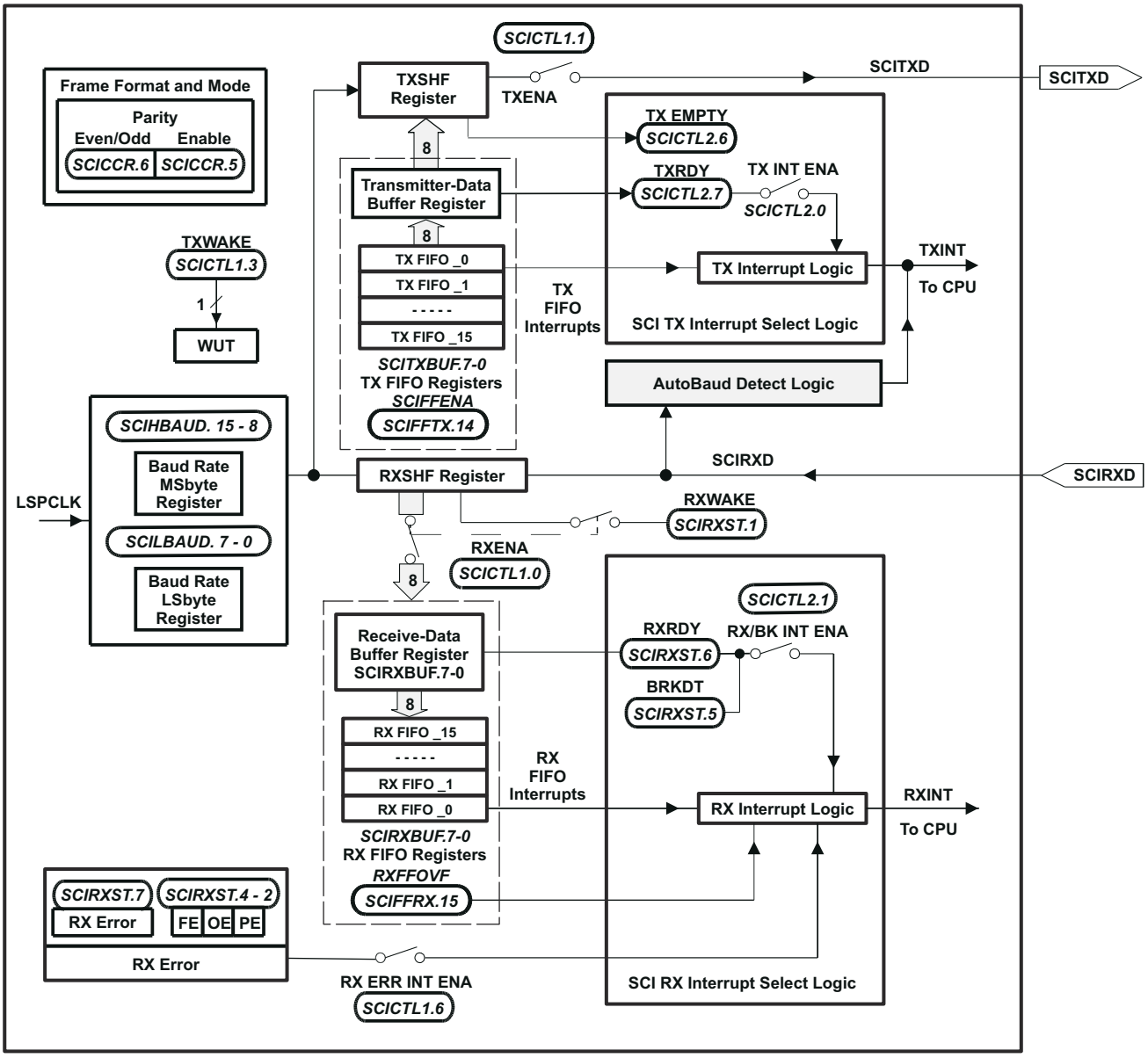

Figure 8-13. Serial Communications Interface (SCI) Module Block Diagram

Copyright © 2021 Texas Instruments Incorporated

8.2.11 Serial Peripheral Interface (SPI) Module (SPI-A, SPI-D)

The device includes the four-pin serial peripheral interface (SPI) module. Two SPI modules (SPI-A and SPI-D) are available. The SPI is a high-speed, synchronous serial I/O port that allows a serial bit stream of programmed length (1 to 16 bits) to be shifted into and out of the device at a programmable bit-transfer rate. Normally, the SPI is used for communications between the MCU controller and external peripherals or another processor. Typical applications include external I/O or peripheral expansion through devices such as shift registers, display drivers, and ADCs. Multidevice communications are supported by the master/slave operation of the SPI.

The SPI module features include:

- Four external pins:
  - SPISOMI: SPI slave-output/master-input pin
  - SPISIMO: SPI slave-input/master-output pin
  - $\overline{\text{SPISTE}}$: SPI slave transmit-enable pin
  - SPICLK: SPI serial-clock pin

Note

All four pins can be used as GPIO if the SPI module is not used.

- Two operational modes: master and slave

  Baud rate: 125 different programmable rates.

$$\text{Baud rate} = \frac{\text{LSPCLK}}{(\text{SPIBRR} + 1)} \qquad \text{when SPIBRR} = 3 \text{ to } 127$$

$$\text{Baud rate} = \frac{\text{LSPCLK}}{4} \qquad \text{when SPIBRR} = 0, 1, 2$$

Note

See Section 7 for maximum I/O pin toggling speed.

- Data word length: 1 to 16 data bits
- Four clocking schemes (controlled by clock polarity and clock phase bits) include:
  - Falling edge without phase delay: SPICLK active-high. SPI transmits data on the falling edge of the SPICLK signal and receives data on the rising edge of the SPICLK signal.
  - Falling edge with phase delay: SPICLK active-high. SPI transmits data one half-cycle ahead of the falling edge of the SPICLK signal and receives data on the falling edge of the SPICLK signal.
  - Rising edge without phase delay: SPICLK inactive-low. SPI transmits data on the rising edge of the SPICLK signal and receives data on the falling edge of the SPICLK signal.
  - Rising edge with phase delay: SPICLK inactive-low. SPI transmits data one half-cycle ahead of the rising edge of the SPICLK signal and receives data on the rising edge of the SPICLK signal.
- Simultaneous receive and transmit operation (transmit function can be disabled in software)
- Transmitter and receiver operations are accomplished through either interrupt-driven or polled algorithms.
- Nine SPI module control registers: Located in control register frame beginning at address 7040h.

Note

All registers in this module are 16-bit registers that are connected to Peripheral Frame 2. When a register is accessed, the register data is in the lower byte (7–0), and the upper byte (15–8) is read as zeros. Writing to the upper byte has no effect.

Enhanced features:

- 16-level transmit/receive FIFO
- Delayed transmit control

Copyright © 2021 Texas Instruments Incorporated

The SPI port operation is configured and controlled by the registers listed in Table 8-14 and Table 8-15 .

Table 8-14. SPI-A Registers

NAME	ADDRESS	SIZE (x16)	DESCRIPTION(1)
SPICCR	0x7040	1	SPI-A Configuration Control Register
SPICTL	0x7041	1	SPI-A Operation Control Register
SPISTS	0x7042	1	SPI-A Status Register
SPIBRR	0x7044	1	SPI-A Baud Rate Register
SPIRXEMU	0x7046	1	SPI-A Receive Emulation Buffer Register
SPIRXBUF	0x7047	1	SPI-A Serial Input Buffer Register
SPITXBUF	0x7048	1	SPI-A Serial Output Buffer Register
SPIDAT	0x7049	1	SPI-A Serial Data Register
SPIFFTX	0x704A	1	SPI-A FIFO Transmit Register
SPIFFRX	0x704B	1	SPI-A FIFO Receive Register
SPIFFCT	0x704C	1	SPI-A FIFO Control Register
SPIPRI	0x704F	1	SPI-A Priority Control Register

(1) Registers in this table are mapped to Peripheral Frame 2. This space only allows 16-bit accesses. 32-bit accesses produce undefined results.

Table 8-15. SPI-D Registers

NAME	ADDRESS	SIZE (x16)	DESCRIPTION(1)
SPICCR	0x7780	1	SPI-D Configuration Control Register
SPICTL	0x7781	1	SPI-D Operation Control Register
SPISTS	0x7782	1	SPI-D Status Register
SPIBRR	0x7784	1	SPI-D Baud Rate Register
SPIRXEMU	0x7786	1	SPI-D Receive Emulation Buffer Register
SPIRXBUF	0x7787	1	SPI-D Serial Input Buffer Register
SPITXBUF	0x7788	1	SPI-D Serial Output Buffer Register
SPIDAT	0x7789	1	SPI-D Serial Data Register
SPIFFTX	0x778A	1	SPI-D FIFO Transmit Register
SPIFFRX	0x778B	1	SPI-D FIFO Receive Register
SPIFFCT	0x778C	1	SPI-D FIFO Control Register
SPIPRI	0x778F	1	SPI-D Priority Control Register

(1) Registers in this table are mapped to Peripheral Frame 2. This space only allows 16-bit accesses. 32-bit accesses produce undefined results.

Figure 8-14 is a block diagram of the SPI in slave mode.

Copyright © 2021 Texas Instruments Incorporated

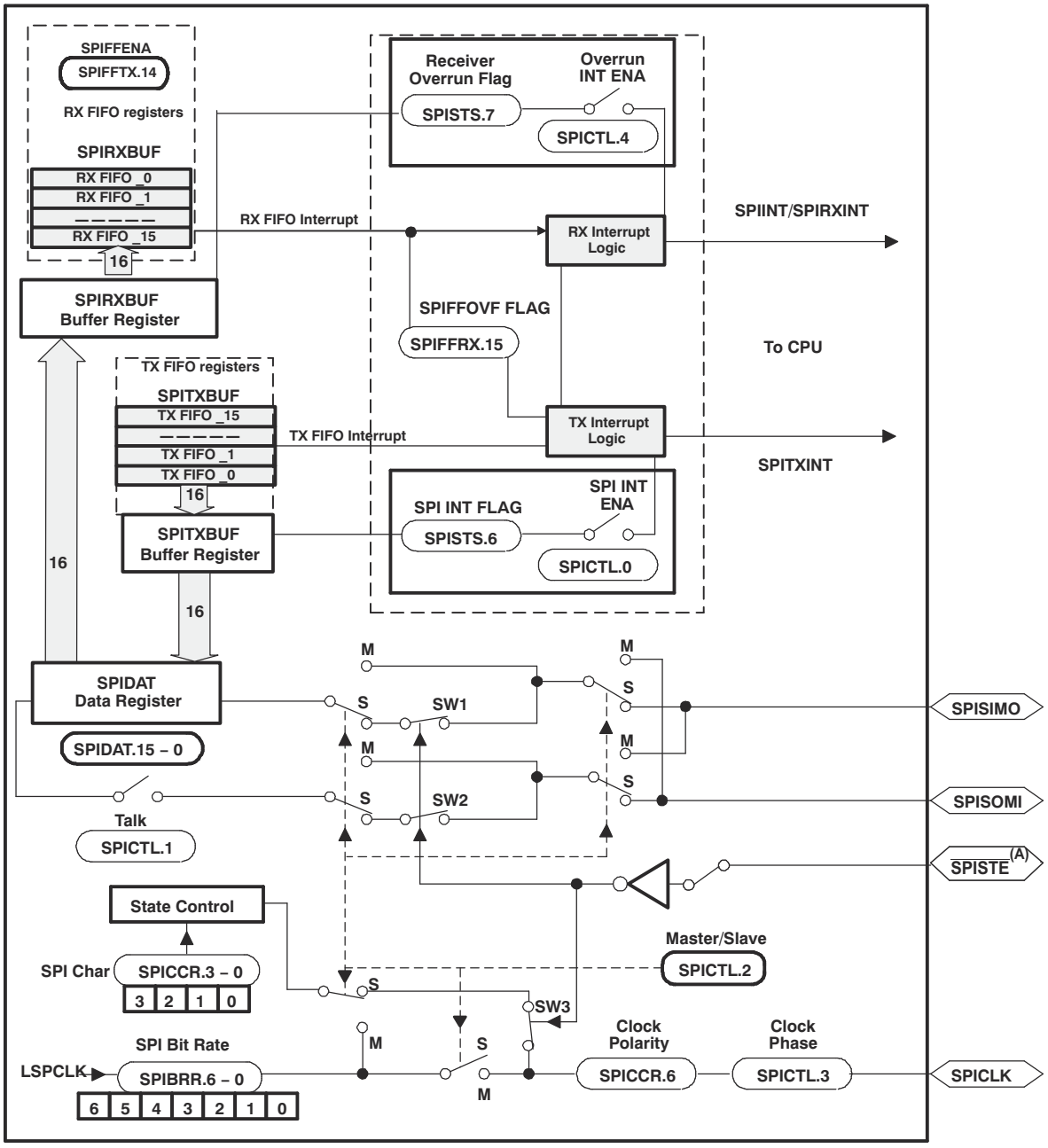

A. $\overline{\text{SPISTE}}$ is driven low by the master for a slave device.

Figure 8-14. SPI Module Block Diagram (Slave Mode)

8.2.12 Inter-Integrated Circuit (I2C)

The device contains one I2C Serial Port. Figure 8-15 shows how the I2C peripheral module interfaces within the device.

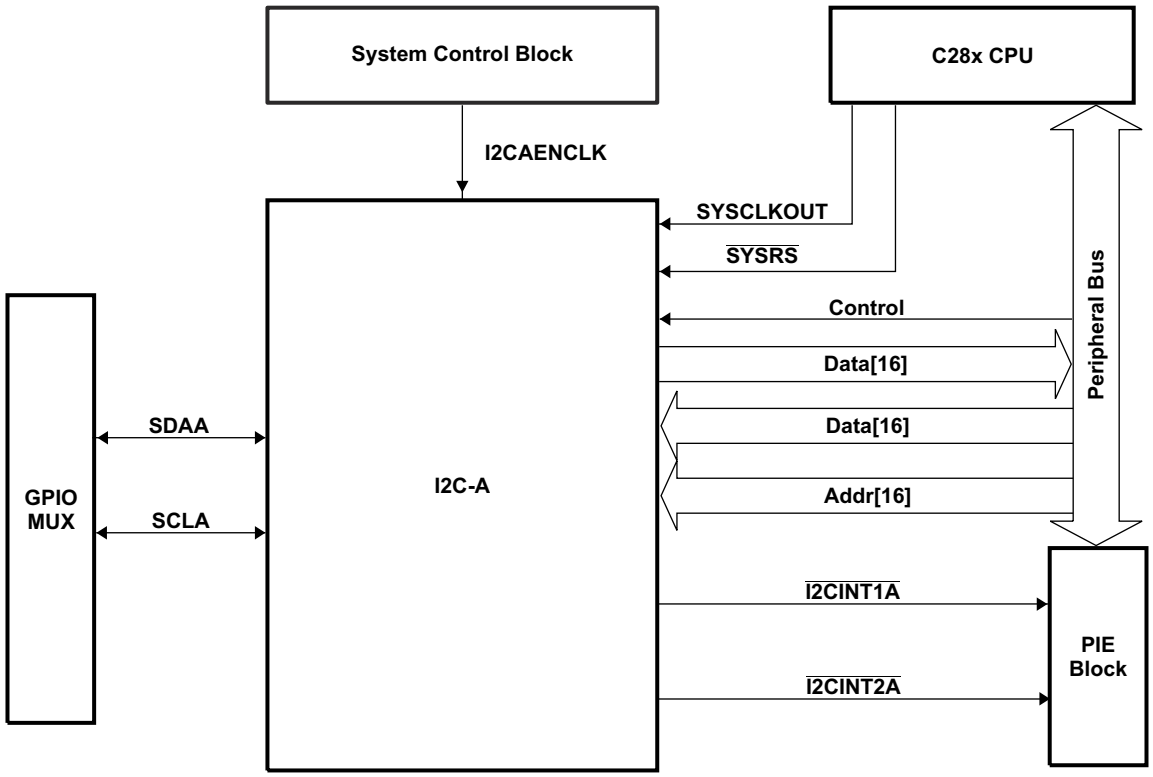

A. The I2C registers are accessed at the SYSCLKOUT rate. The internal timing and signal waveforms of the I2C port are also at the SYSCLKOUT rate.

B. The clock enable bit (I2CAENCLK) in the PCLKCR0 register turns off the clock to the I2C port for low power operation. Upon reset, I2CAENCLK is clear, which indicates the peripheral internal clocks are off.

Figure 8-15. I2C Peripheral Module Interfaces

Copyright © 2021 Texas Instruments Incorporated

The I2C module has the following features:

- Compliance with the Philips Semiconductors I^2C-bus specification (version 2.1):
  - Support for 1-bit to 8-bit format transfers
  - 7-bit and 10-bit addressing modes
  - General call
  - START byte mode
  - Support for multiple master-transmitters and slave-receivers
  - Support for multiple slave-transmitters and master-receivers
  - Combined master transmit/receive and receive/transmit mode
  - Data transfer rate from 10 kbps up to 400 kbps (I2C Fast-mode rate)
- One 16-word receive FIFO and one 16-word transmit FIFO
- One interrupt that can be used by the CPU. This interrupt can be generated as a result of one of the following conditions:
  - Transmit-data ready
  - Receive-data ready
  - Register-access ready
  - No-acknowledgment received
  - Arbitration lost
  - Stop condition detected
  - Addressed as slave
- An additional interrupt that can be used by the CPU when in FIFO mode
- Module-enable and module-disable capability
- Free data format mode

The registers in Table 8-16 configure and control the I2C port operation.

Table 8-16. I2C-A Registers

NAME	ADDRESS	DESCRIPTION
I2COAR	0x7900	I2C own address register
I2CIER	0x7901	I2C interrupt enable register
I2CSTR	0x7902	I2C status register
I2CCLKL	0x7903	I2C clock low-time divider register
I2CCLKH	0x7904	I2C clock high-time divider register
I2CCNT	0x7905	I2C data count register
I2CDRR	0x7906	I2C data receive register
I2CSAR	0x7907	I2C slave address register
I2CDXR	0x7908	I2C data transmit register
I2CMDR	0x7909	I2C mode register
I2CISRC	0x790A	I2C interrupt source register
I2CPSC	0x790C	I2C prescaler register
I2CFFTX	0x7920	I2C FIFO transmit register
I2CFFRX	0x7921	I2C FIFO receive register
I2CRSR	–	I2C receive shift register (not accessible to the CPU)
I2CXSR	–	I2C transmit shift register (not accessible to the CPU)

8.2.13 GPIO MUX

On the 2834x devices, the GPIO MUX can multiplex up to three independent peripheral signals on a single GPIO pin in addition to providing individual pin bit-banging I/O capability. The GPIO MUX block diagram per pin is shown in Figure 8-16. Because of the open-drain capabilities of the I2C pins, the GPIO MUX block diagram for these pins differ. See the *TMS320x2834x Delfino System Control and Interrupts Reference Guide* for details.

Copyright © 2021 Texas Instruments Incorporated

Note

There is a 2-SYSCLKOUT cycle delay from when the write to the GPxMUXn and GPxQSELn registers occurs to when the action is valid.

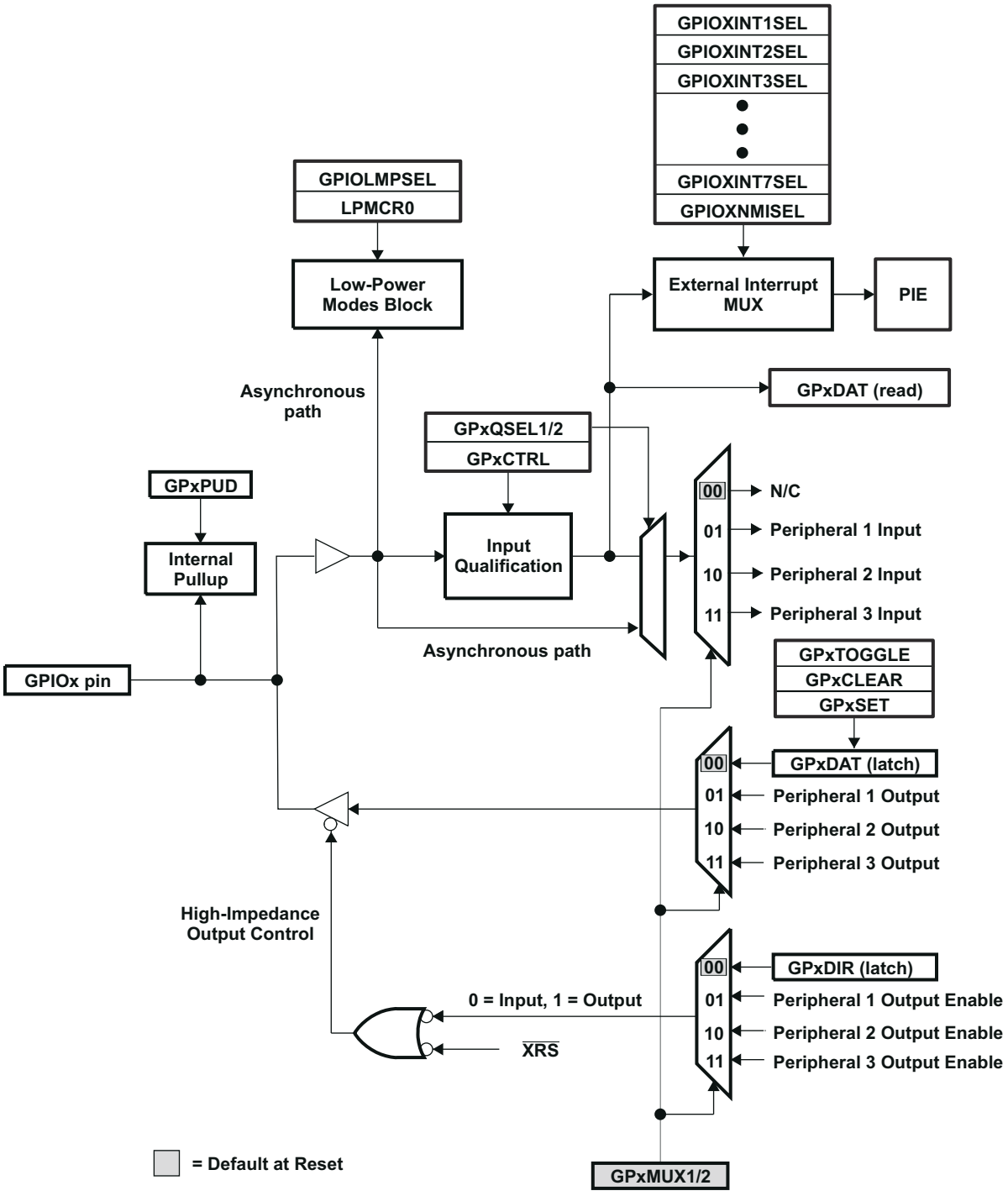

A. x stands for the port, either A or B. For example, GPxDIR refers to either the GPADIR and GPBDIR register depending on the particular GPIO pin selected.
B. GPxDAT latch/read are accessed at the same memory location.
C. This is a generic GPIO MUX block diagram. Not all options may be applicable for all GPIO pins. See the *TMS320x2834x Delfino System Control and Interrupts Reference Guide* for pin-specific variations.

Figure 8-16. GPIO MUX Block Diagram

Copyright © 2021 Texas Instruments Incorporated

The device supports 88 GPIO pins. The GPIO control and data registers are mapped to Peripheral Frame 1 to enable 32-bit operations on the registers (along with 16-bit operations). Table 8-17 shows the GPIO register mapping.

Table 8-17. GPIO Registers

NAME	ADDRESS	SIZE (x16)	DESCRIPTION
GPIO CONTROL REGISTERS (EALLOW PROTECTED)			
GPACTRL	0x6F80	2	GPIO A Control Register (GPIO0 to 31)
GPAQSEL1	0x6F82	2	GPIO A Qualifier Select 1 Register (GPIO0 to 15)
GPAQSEL2	0x6F84	2	GPIO A Qualifier Select 2 Register (GPIO16 to 31)
GPAMUX1	0x6F86	2	GPIO A MUX 1 Register (GPIO0 to 15)
GPAMUX2	0x6F88	2	GPIO A MUX 2 Register (GPIO16 to 31)
GPADIR	0x6F8A	2	GPIO A Direction Register (GPIO0 to 31)
GPAPUD	0x6F8C	2	GPIO A Pullup Disable Register (GPIO0 to 31)
Reserved	0x6F8E – 0x6F8F	2	
GPBCTRL	0x6F90	2	GPIO B Control Register (GPIO32 to 63)
GPBQSEL1	0x6F92	2	GPIO B Qualifier Select 1 Register (GPIO32 to 47)
GPBQSEL2	0x6F94	2	GPIOB Qualifier Select 2 Register (GPIO48 to 63)
GPBMUX1	0x6F96	2	GPIO B MUX 1 Register (GPIO32 to 47)
GPBMUX2	0x6F98	2	GPIO B MUX 2 Register (GPIO48 to 63)
GPBDIR	0x6F9A	2	GPIO B Direction Register (GPIO32 to 63)
GPBPUD	0x6F9C	2	GPIO B Pullup Disable Register (GPIO32 to 63)
Reserved	0x6F9E – 0x6FA5	8	
GPCMUX1	0x6FA6	2	GPIO C MUX1 Register (GPIO64 to 79)
GPCMUX2	0x6FA8	2	GPIO C MUX2 Register (GPIO80 to 87)
GPCDIR	0x6FAA	2	GPIO C Direction Register (GPIO64 to 87)
GPCPUD	0x6FAC	2	GPIO C Pullup Disable Register (GPIO64 to 87)
Reserved	0x6FAE – 0x6FBF	18	
GPIO DATA REGISTERS (NOT EALLOW PROTECTED)			
GPADAT	0x6FC0	2	GPIO A Data Register (GPIO0 to 31)
GPASET	0x6FC2	2	GPIO A Data Set Register (GPIO0 to 31)
GPACLEAR	0x6FC4	2	GPIO A Data Clear Register (GPIO0 to 31)
GPATOGGLE	0x6FC6	2	GPIO A Data Toggle Register (GPIO0 to 31)
GPBDAT	0x6FC8	2	GPIO B Data Register (GPIO32 to 63)
GPBSET	0x6FCA	2	GPIO B Data Set Register (GPIO32 to 63)
GPBCLEAR	0x6FCC	2	GPIO B Data Clear Register (GPIO32 to 63)
GPBTOGGLE	0x6FCE	2	GPIOB Data Toggle Register (GPIO32 to 63)
GPCDAT	0x6FD0	2	GPIO C Data Register (GPIO64 to 87)
GPCSET	0x6FD2	2	GPIO C Data Set Register (GPIO64 to 87)
GPCCLEAR	0x6FD4	2	GPIO C Data Clear Register (GPIO64 to 87)
GPCTOGGLE	0x6FD6	2	GPIO C Data Toggle Register (GPIO64 to 87)
Reserved	0x6FD8 – 0x6FDF	8	
GPIO INTERRUPT AND LOW-POWER MODES SELECT REGISTERS (EALLOW PROTECTED)			
GPIOXINT1SEL	0x6FE0	1	XINT1 GPIO Input Select Register (GPIO0 to 31)
GPIOXINT2SEL	0x6FE1	1	XINT2 GPIO Input Select Register (GPIO0 to 31)
GPIOXNMISEL	0x6FE2	1	XNMI GPIO Input Select Register (GPIO0 to 31)
GPIOXINT3SEL	0x6FE3	1	XINT3 GPIO Input Select Register (GPIO32 to 63)
GPIOXINT4SEL	0x6FE4	1	XINT4 GPIO Input Select Register (GPIO32 to 63)

Copyright © 2021 Texas Instruments Incorporated

Table 8-17. GPIO Registers (continued)

NAME	ADDRESS	SIZE (x16)	DESCRIPTION
GPIOXINT5SEL	0x6FE5	1	XINT5 GPIO Input Select Register (GPIO32 to 63)
GPIOXINT6SEL	0x6FE6	1	XINT6 GPIO Input Select Register (GPIO32 to 63)
GPIOINT7SEL	0x6FE7	1	XINT7 GPIO Input Select Register (GPIO32 to 63)
GPIOLPMSEL	0x6FE8	2	LPM GPIO Select Register (GPIO0 to 31)
Reserved	0x6FEA – 0x6FFF	22	

Table 8-18. GPIO-A Mux Peripheral Selection Matrix

REGISTER BITS			PERIPHERAL SELECTION			
GPADIR GPADAT GPASET GPACLR GPATOGGLE		GPAMUX1 GPAQSEL1	GPIOx GPAMUX1 = 0,0	PER1 GPAMUX1 = 0, 1	PER2 GPAMUX1 = 1, 0	PER3 GPAMUX1 = 1, 1
QUALPRD0	0	1, 0	GPIO0 (I/O)	EPWM1A (O)	Reserved	Reserved
	1	3, 2	GPIO1 (I/O)	EPWM1B (O)	ECAP6 (I/O)	MFSRB (I/O)
	2	5, 4	GPIO2 (I/O)	EPWM2A (O)	Reserved	Reserved
	3	7, 6	GPIO3 (I/O)	EPWM2B (O)	ECAP5 (I/O)	MCLKRB (I/O)
	4	9, 8	GPIO4 (I/O)	EPWM3A (O)	Reserved	Reserved
	5	11, 10	GPIO5 (I/O)	EPWM3B (O)	MFSRA (I/O)	ECAP1 (I/O)
	6	13, 12	GPIO6 (I/O)	EPWM4A (O)	EPWMSYNCI (I)	EPWMSYNCO (O)
	7	15, 14	GPIO7 (I/O)	EPWM4B (O)	MCLKRA (I/O)	ECAP2 (I/O)
QUALPRD1	8	17, 16	GPIO8 (I/O)	EPWM5A (O)	CANTXB (O)	$\overline{\text{ADCSOCAO}}$ (O)
	9	19, 18	GPIO9 (I/O)	EPWM5B (O)	SCITXDB (O)	ECAP3 (I/O)
	10	21, 20	GPIO10 (I/O)	EPWM6A (O)	CANRXB (I)	$\overline{\text{ADCSOCBO}}$ (O)
	11	23, 22	GPIO11 (I/O)	EPWM6B (O)	SCIRXDB (I)	ECAP4 (I/O)
	12	25, 24	GPIO12 (I/O)	$\overline{\text{TZ1}}$ (I)	CANTXB (O)	MDXB (O)
	13	27, 26	GPIO13 (I/O)	$\overline{\text{TZ2}}$ (I)	CANRXB (I)	MDRB (I)
	14	29, 28	GPIO14 (I/O)	$\overline{\text{TZ3}}$ (I)/ $\overline{\text{XHOLD}}$ (I)	SCITXDB (O)	MCLKXB (I/O)
	15	31, 30	GPIO15 (I/O)	$\overline{\text{TZ4}}$ (I)/ $\overline{\text{XHOLDA}}$ (O)	SCIRXDB (I)	MFSXB (I/O)
		GPAMUX2 GPAQSEL2	**GPAMUX2 = 0, 0**	**GPAMUX2 = 0, 1**	**GPAMUX2 = 1, 0**	**GPAMUX2 = 1, 1**
QUALPRD2	16	1, 0	GPIO16 (I/O)	SPISIMOA (I/O)	CANTXB (O)	$\overline{\text{TZ5}}$ (I)
	17	3, 2	GPIO17 (I/O)	SPISOMIA (I/O)	CANRXB (I)	$\overline{\text{TZ6}}$ (I)
	18	5, 4	GPIO18 (I/O)	SPICLKA (I/O)	SCITXDB (O)	CANRXA (I)
	19	7, 6	GPIO19 (I/O)	$\overline{\text{SPISTEA}}$ (I/O)	SCIRXDB (I)	CANTXA (O)
	20	9, 8	GPIO20 (I/O)	EQEP1A (I)	MDXA (O)	CANTXB (O)
	21	11, 10	GPIO21 (I/O)	EQEP1B (I)	MDRA (I)	CANRXB (I)
	22	13, 12	GPIO22 (I/O)	EQEP1S (I/O)	MCLKXA (I/O)	SCITXDB (O)
	23	15, 14	GPIO23 (I/O)	EQEP1I (I/O)	MFSXA (I/O)	SCIRXDB (I)
QUALPRD3	24	17, 16	GPIO24 (I/O)	ECAP1 (I/O)	EQEP2A (I)	MDXB (O)
	25	19, 18	GPIO25 (I/O)	ECAP2 (I/O)	EQEP2B (I)	MDRB (I)
	26	21, 20	GPIO26 (I/O)	ECAP3 (I/O)	EQEP2I (I/O)	MCLKXB (I/O)
	27	23, 22	GPIO27 (I/O)	ECAP4 (I/O)	EQEP2S (I/O)	MFSXB (I/O)
	28	25, 24	GPIO28 (I/O)	SCIRXDA (I)	$\overline{\text{XZCS6}}$ (O)	
	29	27, 26	GPIO29 (I/O)	SCITXDA (O)	XA19 (O)	
	30	29, 28	GPIO30 (I/O)	CANRXA (I)	XA18 (O)	
	31	31, 30	GPIO31 (I/O)	CANTXA (O)	XA17 (O)	

Copyright © 2021 Texas Instruments Incorporated

Table 8-19. GPIO-B Mux Peripheral Selection Matrix

REGISTER BITS			PERIPHERAL SELECTION			
GPBDIR GPBDAT GPBSET GPBCLR GPBTOGGLE		GPBMUX1 GPBQSEL1	GPIOx GPBMUX1 = 0, 0	PER1 GPBMUX1 = 0, 1	PER2 GPBMUX1 = 1, 0	PER3 GPBMUX1 = 1, 1
QUALPRD0	0	1, 0	GPIO32 (I/O)	SDAA (I/OC)(1)	EPWMSYNCI (I)	$\overline{\text{ADCSOCAO}}$ (O)
	1	3, 2	GPIO33 (I/O)	SCLA (I/OC)(1)	EPWMSYNCO (O)	$\overline{\text{ADCSOCBO}}$ (O)
	2	5, 4	GPIO34 (I/O)	ECAP1 (I/O)	XREADY (I)	
	3	7, 6	GPIO35 (I/O)	SCITXDA (O)	XR/ $\overline{\text{W}}$ (O)	
	4	9, 8	GPIO36 (I/O)	SCIRXDA (I)	$\overline{\text{XZCS0}}$ (O)	
	5	11, 10	GPIO37 (I/O)	ECAP2 (I/O)	$\overline{\text{XZCS7}}$ (O)	
	6	13, 12	GPIO38 (I/O)	Reserved	$\overline{\text{XWE0}}$ (O)	
	7	15, 14	GPIO39 (I/O)		XA16 (O)	
QUALPRD1	8	17, 16	GPIO40 (I/O)		XA0 (O)	
	9	19, 18	GPIO41 (I/O)		XA1 (O)	
	10	21, 20	GPIO42 (I/O)		XA2 (O)	
	11	23, 22	GPIO43 (I/O)		XA3 (O)	
	12	25, 24	GPIO44 (I/O)		XA4 (O)	
	13	27, 26	GPIO45 (I/O)		XA5 (O)	
	14	29, 28	GPIO46 (I/O)		XA6 (O)	
	15	31, 30	GPIO47 (I/O)		XA7 (O)	
		GPBMUX2 GPBQSEL2	GPBMUX2 = 0, 0	GPBMUX2 = 0, 1	GPBMUX2 = 1, 0	GPBMUX2 = 1, 1
QUALPRD2	16	1, 0	GPIO48 (I/O)	ECAP5 (I/O)	XD31 (I/O)	SPISIMOD (I/O)
	17	3, 2	GPIO49 (I/O)	ECAP6 (I/O)	XD30 (I/O)	SPISOMID (I/O)
	18	5, 4	GPIO50 (I/O)	EQEP1A (I)	XD29 (I/O)	SPICLKD (I/O)
	19	7, 6	GPIO51 (I/O)	EQEP1B (I)	XD28 (I/O)	SPISTED (I/O)
	20	9, 8	GPIO52 (I/O)	EQEP1S (I/O)	XD27 (I/O)	Reserved
	21	11, 10	GPIO53 (I/O)	EQEP1I (I/O)	XD26 (I/O)	Reserved
	22	13, 12	GPIO54 (I/O)	SPISIMOA (I/O)	XD25 (I/O)	EQEP3A (I)
	23	15, 14	GPIO55 (I/O)	SPISOMIA (I/O)	XD24 (I/O)	EQEP3B (I)
QUALPRD3	24	17, 16	GPIO56 (I/O)	SPICLKA (I/O)	XD23 (I/O)	EQEP3S (I/O)
	25	19, 18	GPIO57 (I/O)	$\overline{\text{SPISTEA}}$ (I/O)	XD22 (I/O)	EQEP3I (I/O)
	26	21, 20	GPIO58 (I/O)	MCLKRA (I/O)	XD21 (I/O)	EPWM7A (O)
	27	23, 22	GPIO59 (I/O)	MFSRA (I/O)	XD20 (I/O)	EPWM7B (O)
	28	25, 24	GPIO60 (I/O)	MCLKRB (I/O)	XD19 (I/O)	EPWM8A (O)
	29	27, 26	GPIO61 (I/O)	MFSRB (I/O)	XD18 (I/O)	EPWM8B (O)
	30	29, 28	GPIO62 (I/O)	SCIRXDC (I)	XD17 (I/O)	EPWM9A (O)
	31	31, 30	GPIO63 (I/O)	SCITXDC (O)	XD16 (I/O)	EPWM9B (O)

(1) Open drain

Table 8-20. GPIO-C Mux Peripheral Selection Matrix

REGISTER BITS			PERIPHERAL SELECTION	
GPCDIR GPCDAT GPCSET GPCCLR GPCTOGGLE		GPCMUX1	GPIOx or PER1 GPCMUX1 = 0, 0 or 0, 1	PER2 or PER3 GPCMUX1 = 1, 0 or 1, 1
no qual	0	1, 0	GPIO64 (I/O)	XD15 (I/O)
	1	3, 2	GPIO65 (I/O)	XD14 (I/O)
	2	5, 4	GPIO66 (I/O)	XD13 (I/O)
	3	7, 6	GPIO67 (I/O)	XD12 (I/O)
	4	9, 8	GPIO68 (I/O)	XD11 (I/O)
	5	11, 10	GPIO69 (I/O)	XD10 (I/O)
	6	13, 12	GPIO70 (I/O)	XD9 (I/O)
	7	15, 14	GPIO71 (I/O)	XD8 (I/O)
no qual	8	17, 16	GPIO72 (I/O)	XD7 (I/O)
	9	19, 18	GPIO73 (I/O)	XD6 (I/O)
	10	21, 20	GPIO74 (I/O)	XD5 (I/O)
	11	23, 22	GPIO75 (I/O)	XD4 (I/O)
	12	25, 24	GPIO76 (I/O)	XD3 (I/O)
	13	27, 26	GPIO77 (I/O)	XD2 (I/O)
	14	29, 28	GPIO78 (I/O)	XD1 (I/O)
	15	31, 30	GPIO79 (I/O)	XD0 (I/O)
		GPCMUX2	**GPCMUX2 = 0, 0 or 0, 1**	**GPCMUX2 = 1, 0 or 1, 1**
no qual	16	1, 0	GPIO80 (I/O)	XA8 (O)
	17	3, 2	GPIO81 (I/O)	XA9 (O)
	18	5, 4	GPIO82 (I/O)	XA10 (O)
	19	7, 6	GPIO83 (I/O)	XA11 (O)
	20	9, 8	GPIO84 (I/O)	XA12 (O)
	21	11, 10	GPIO85 (I/O)	XA13 (O)
	22	13, 12	GPIO86 (I/O)	XA14 (O)
	23	15, 14	GPIO87 (I/O)	XA15 (O)

Copyright © 2021 Texas Instruments Incorporated

The user can select the type of input qualification for each GPIO pin through the GPxQSEL1/2 registers from four choices:

- Synchronization To SYSCLKOUT Only (GPxQSEL1/2 = 0, 0): This is the default mode of all GPIO pins at reset and it simply synchronizes the input signal to the system clock (SYSCLKOUT).
- Qualification Using Sampling Window (GPxQSEL1/2 = 0, 1 and 1, 0): In this mode the input signal, after synchronization to the system clock (SYSCLKOUT), is qualified by a specified number of cycles before the input is allowed to change.

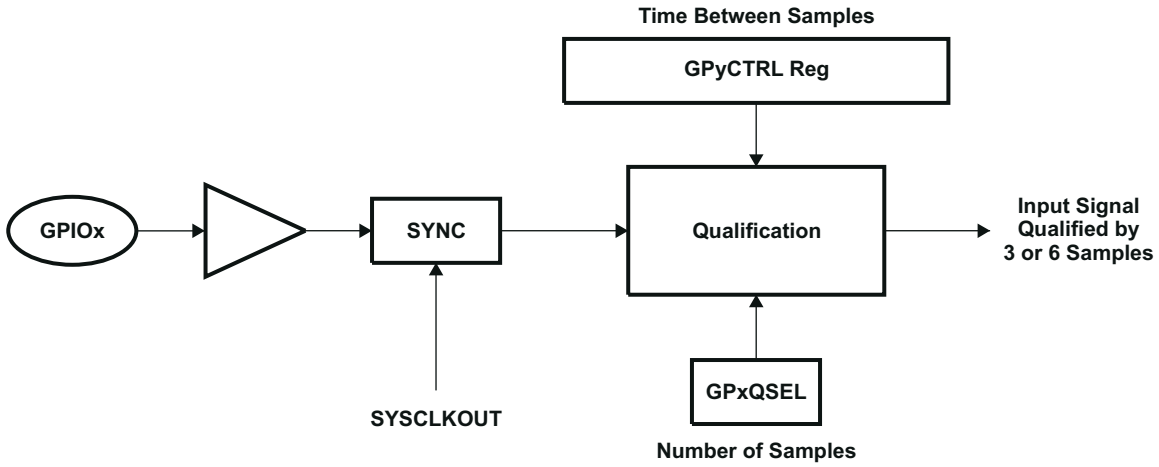

Figure 8-17. Qualification Using Sampling Window

- The sampling period is specified by the QUALPRD bits in the GPxCTRL register and is configurable in groups of 8 signals. It specifies a multiple of SYSCLKOUT cycles for sampling the input signal. The sampling window is either 3-samples or 6-samples wide and the output is only changed when all samples are the same (all 0s or all 1s) as shown in Figure 8-17 (for 6-sample mode).
- No Synchronization (GPxQSEL1/2 = 1,1): This mode is used for peripherals where synchronization is not required (synchronization is performed within the peripheral).

Due to the multilevel multiplexing that is required on the device, there may be cases where a peripheral input signal can be mapped to more then one GPIO pin. Also, when an input signal is not selected, the input signal will default to either a 0 or 1 state, depending on the peripheral.

Copyright © 2021 Texas Instruments Incorporated

8.2.14 External Interface (XINTF)

This section gives a top-level view of the external interface (XINTF) that is implemented on the C2834x devices.

The XINTF is a nonmultiplexed asynchronous bus, similar to the 2812 XINTF. The XINTF is mapped into three fixed zones shown in Figure 8-18.

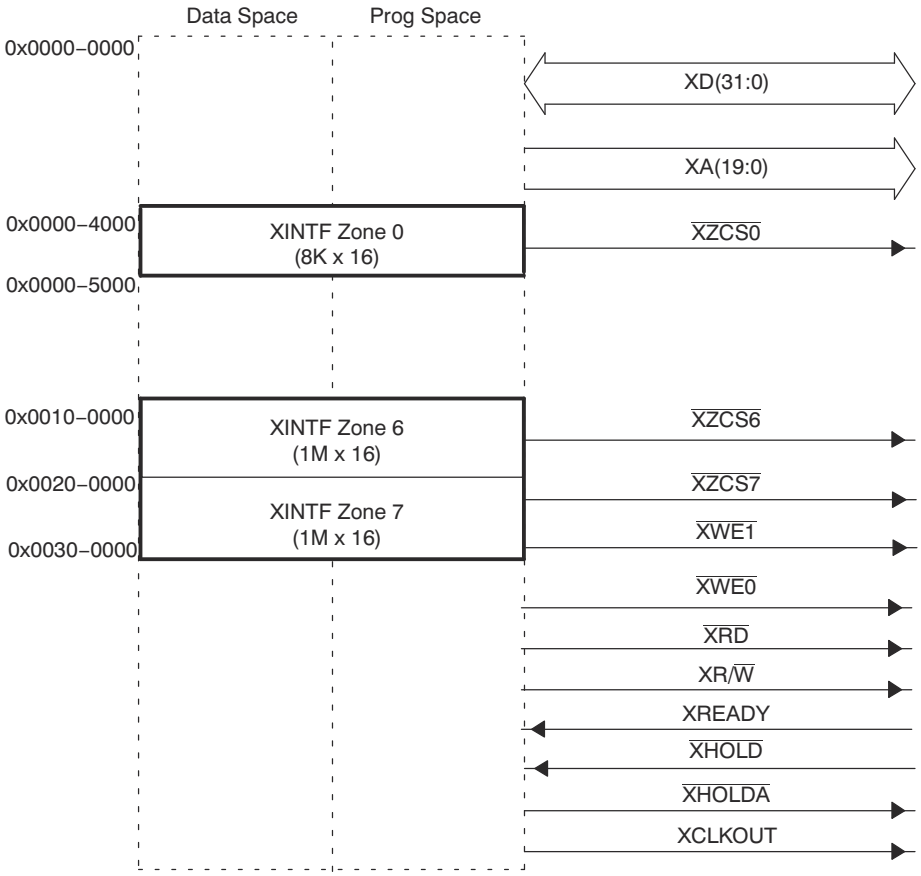

Figure 8-18. External Interface Block Diagram

Copyright © 2021 Texas Instruments Incorporated

Figure 8-19 and Figure 8-20 show typical 16-bit and 32-bit data bus XINTF connections, illustrating how the functionality of the XA0 and $\overline{XWE1}$ signals change, depending on the configuration. Table 8-21 defines XINTF configuration and control registers.

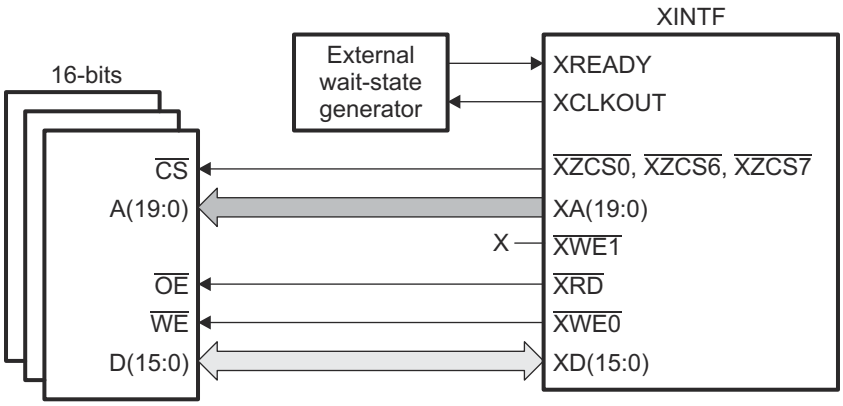

Figure 8-19. Typical 16-Bit Data Bus XINTF Connections

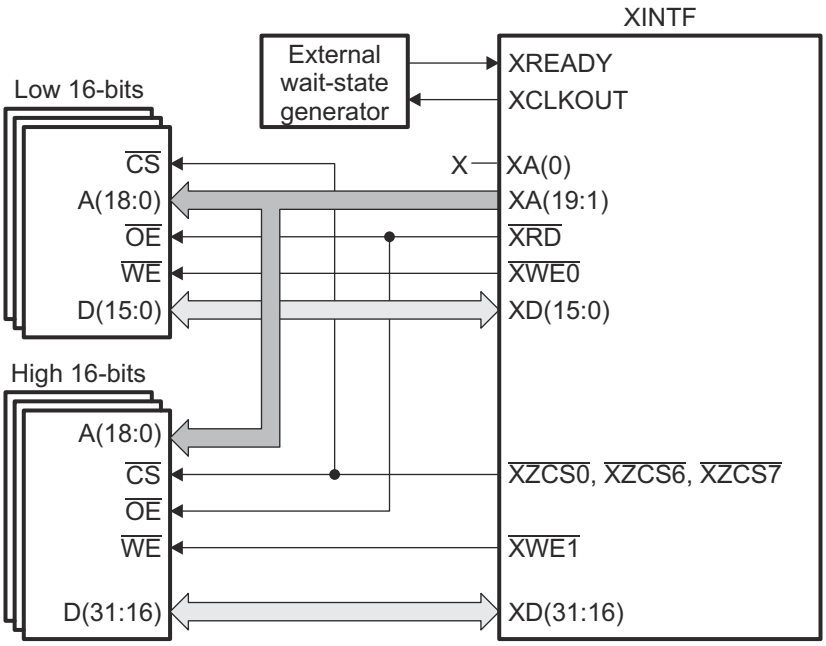

Figure 8-20. Typical 32-Bit Data Bus XINTF Connections

Table 8-21. XINTF Configuration and Control Register Mapping

NAME	ADDRESS	SIZE (x16)	DESCRIPTION
XTIMING0	0x00−0B20	2	XINTF Timing Register, Zone 0
XTIMING6[1]	0x00−0B2C	2	XINTF Timing Register, Zone 6
XTIMING7	0x00−0B2E	2	XINTF Timing Register, Zone 7
XINTCNF2[2]	0x00−0B34	2	XINTF Configuration Register
XBANK	0x00−0B38	1	XINTF Bank Control Register
XREVISION	0x00−0B3A	1	XINTF Revision Register
XRESET	0x00−0B3D	1	XINTF Reset Register

(1) XTIMING1 - XTIMING5 are reserved for future expansion and are not currently used.
(2) XINTCNF1 is reserved and not currently used.

Copyright © 2021 Texas Instruments Incorporated

8.3 Memory Maps

In Figure 8-21 to Figure 8-23, the following apply:

- Memory blocks are not to scale.
- Peripheral Frame 0, Peripheral Frame 1, Peripheral Frame 2, and Peripheral Frame 3 memory maps are restricted to data memory only. A user program cannot access these memory maps in program space.
- *Protected* means the order of "Write followed by Read" operations is preserved rather than the pipeline order. See the *TMS320x2834x Delfino System Control and Interrupts Reference Guide* for more details.
- Certain memory ranges are EALLOW protected against spurious writes after configuration.
- If the eCAN module is not used in an application, the RAM available (LAM, MOTS, MOTO, and mailbox RAM) can be used as general-purpose RAM. The CAN module clock should be enabled for this.

Copyright © 2021 Texas Instruments Incorporated

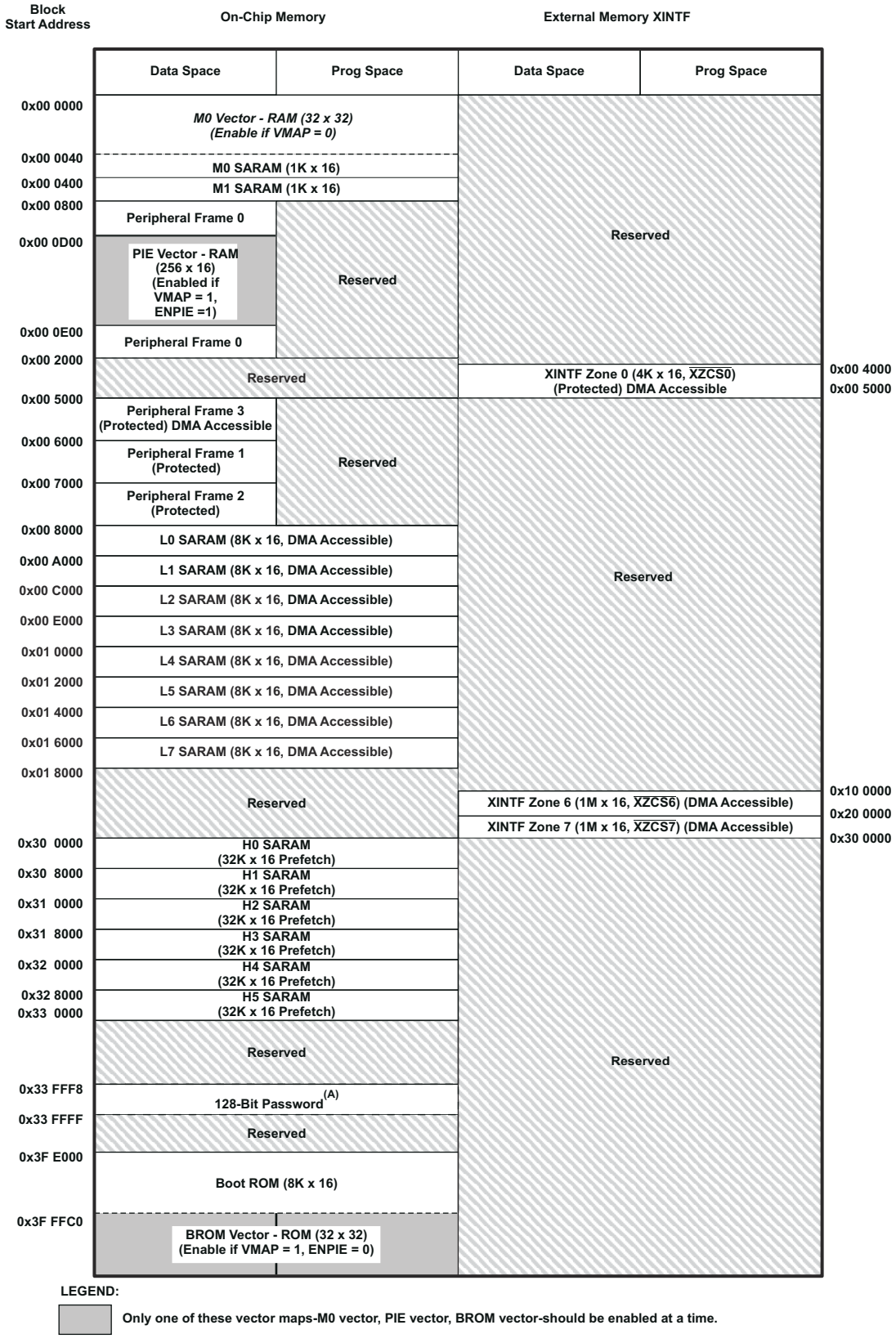

A. These locations support compatibility with legacy C28x designs only. See Section 8.1.9.

Figure 8-21. C28346, C28345 Memory Map

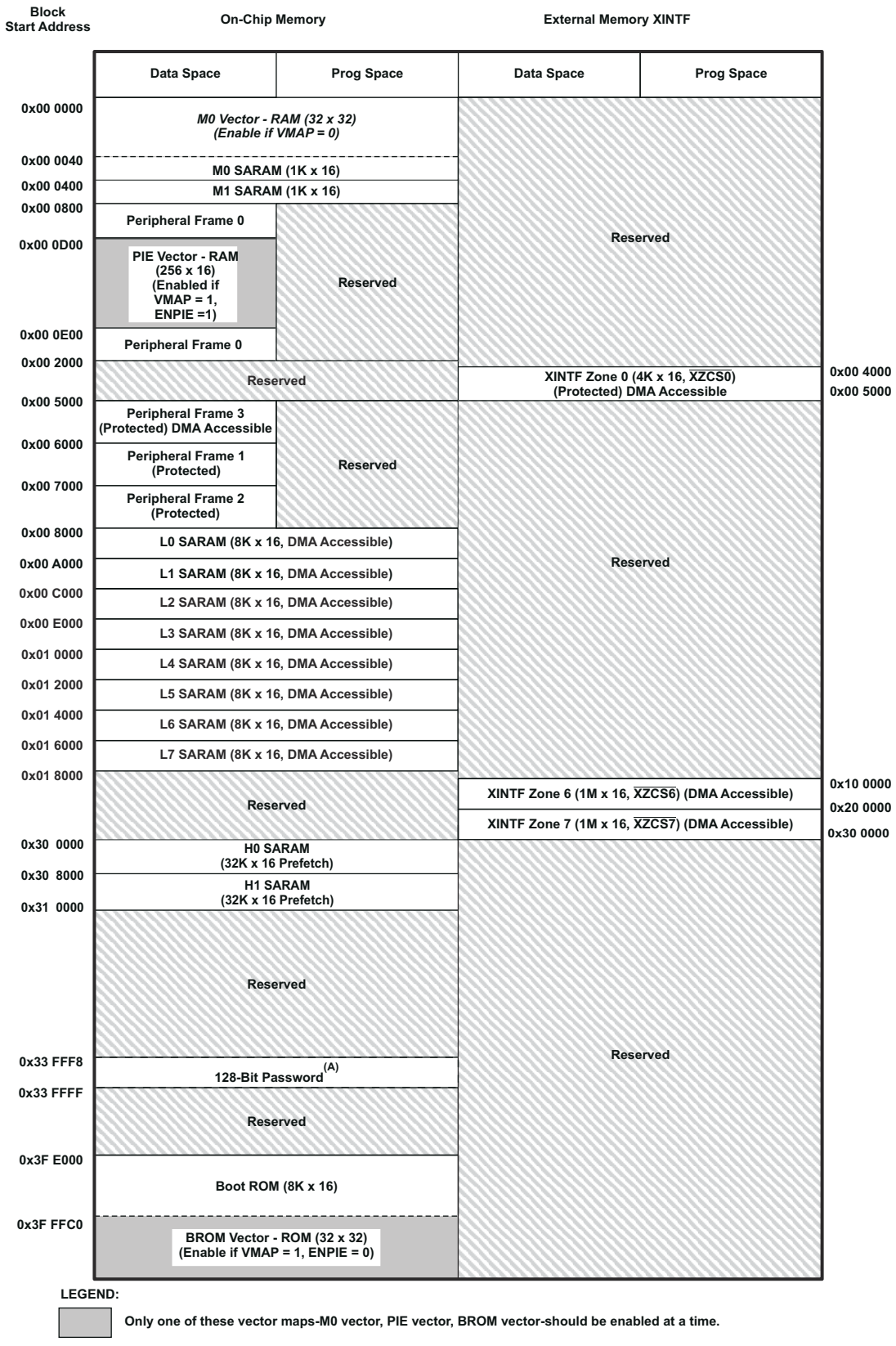

A. These locations support compatibility with legacy C28x designs only. See Section 8.1.9.

Figure 8-22. C28344, C28343 Memory Map

Copyright © 2021 Texas Instruments Incorporated

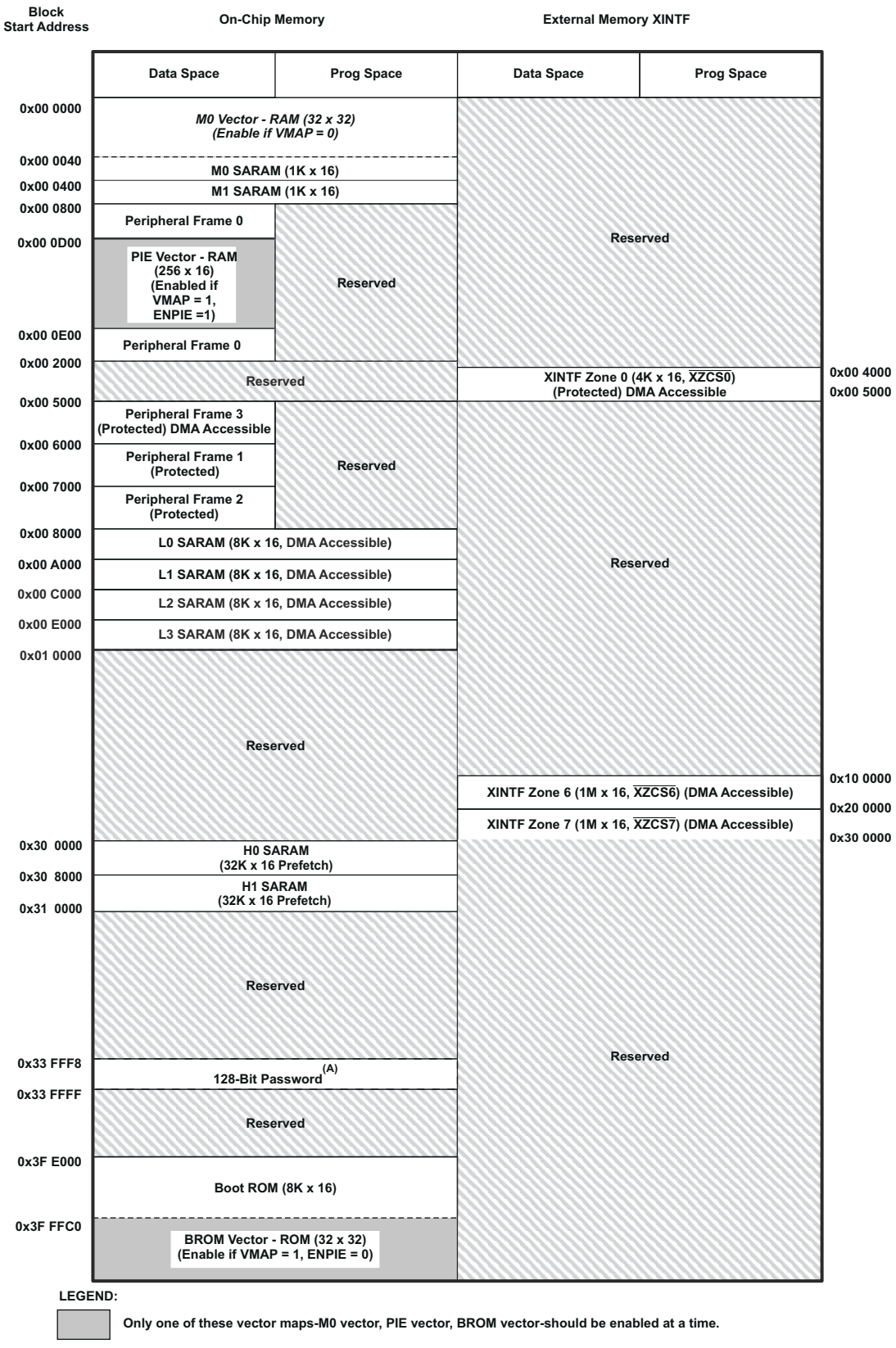

A. These locations support compatibility with legacy C28x designs only. See Section 8.1.9.

Figure 8-23. C28342, C28341 Memory Map

Peripheral Frame 1, Peripheral Frame 2, and Peripheral Frame 3 are grouped together to enable these blocks to be write/read peripheral block protected. The protected mode ensures that all accesses to these blocks happen as written. Because of the C28x pipeline, a write immediately followed by a read, to different memory locations, will appear in reverse order on the memory bus of the CPU. This can cause problems in certain peripheral applications where the user expected the write to occur first (as written). The C28x CPU supports a block protection mode where a region of memory can be protected so as to make sure that operations occur as written (the penalty is extra cycles are added to align the operations). This mode is programmable and by default, it will protect the selected zones.

Copyright © 2021 Texas Instruments Incorporated

The wait states for the various spaces in the memory map area are listed in Table 8-22.

Table 8-22. Wait States

AREA	WAIT STATES (CPU)	WAIT STATES (DMA)(1)	COMMENTS
M0 and M1 SARAMs	0-wait	No access	Fixed
Peripheral Frame 0	0-wait (writes) 1-wait (reads)	No access (writes) 0-wait (reads)	
Peripheral Frame 3	0-wait (writes) 2-wait (reads)	0-wait (writes) 1-wait (reads)	Assumes no conflicts between CPU and DMA.
Peripheral Frame 1	0-wait (writes) 2-wait (reads)	No access	Cycles can be extended by peripheral generated ready. Consecutive writes to the CAN will experience a 1-cycle pipeline hit.
Peripheral Frame 2	0-wait (writes) 2-wait (reads)	No access	Fixed. Cycles cannot be extended by the peripheral.
L0 SARAM	0-wait data and program	1-wait	Assumes no CPU conflicts
L1 SARAM			
L2 SARAM			
L3 SARAM			
L4 SARAM			Assumes no conflicts between CPU and DMA
L5 SARAM			
L6 SARAM	1-wait		
L7 SARAM			
XINTF	Programmable	0-wait data (write) 0-wait data (read)	Programmed through the XTIMING registers or extendable through external XREADY signal.
	1-wait minimum		1-wait is minimum wait states allowed on external waveforms for both reads and writes on XINTF.
	0-wait minimum writes with write buffer enabled		0-wait minimum for writes assumes write buffer enabled and not full. Assumes no conflicts between CPU and DMA. When DMA and CPU try simultaneous conflict, 1-cycle delay is added for arbitration.
H0 SARAM	1-wait	No access	A program-access prefetch mechanism is enabled on these memories to improve instruction fetch performance for linear code execution.
H1 SARAM			
H2 SARAM			
H3 SARAM			
H4 SARAM			
H5 SARAM			
Boot-ROM	1-wait	No access	

(1) The DMA has a base of four cycles/word.

Copyright © 2021 Texas Instruments Incorporated

8.4 Register Map

The devices contain four peripheral register spaces. The spaces are categorized as follows:

Peripheral Frame 0:	These are peripherals that are mapped directly to the CPU memory bus. See Table 8-23.
Peripheral Frame 1	These are peripherals that are mapped to the 32-bit peripheral bus. See Table 8-24.
Peripheral Frame 2:	These are peripherals that are mapped to the 16-bit peripheral bus. See Table 8-25.
Peripheral Frame 3:	These are peripherals that are mapped to the 32-bit DMA-accessible peripheral bus. See Table 8-26.

Table 8-23. Peripheral Frame 0 Registers (1)

NAME	ADDRESS RANGE	SIZE (x16)	ACCESS TYPE(2)
Device Emulation Registers	0x00 0880 – 0x00 09FF	384	EALLOW protected
Code Security Module Registers	0x00 0AE0 – 0x00 0AEF	16	EALLOW protected
XINTF Registers	0x00 0B20 – 0x00 0B3F	32	Not EALLOW protected
CPU-Timer 0, CPU-Timer 1, CPU-Timer 2 Registers	0x00 0C00 – 0x00 0C3F	64	Not EALLOW protected
PIE Registers	0x00 0CE0 – 0x00 0CFF	32	Not EALLOW protected
PIE Vector Table	0x00 0D00 – 0x00 0DFF	256	EALLOW protected
DMA Registers	0x00 1000 – 0x00 11FF	512	EALLOW protected

(1) Registers in Frame 0 support 16-bit and 32-bit accesses.
(2) If registers are EALLOW protected, then writes cannot be performed until the EALLOW instruction is executed. The EDIS instruction disables writes to prevent stray code or pointers from corrupting register contents.

Table 8-24. Peripheral Frame 1 Registers

NAME	ADDRESS RANGE	SIZE (x16)
eCAN-A Registers	0x00 6000 – 0x00 61FF	512
eCAN-B Registers	0x00 6200 – 0x00 63FF	512
ePWM1 + HRPWM1 Registers	0x00 6800 – 0x00 683F	64
ePWM2 + HRPWM2 Registers	0x00 6840 – 0x00 687F	64
ePWM3 + HRPWM3 Registers	0x00 6880 – 0x00 68BF	64
ePWM4 + HRPWM4 Registers	0x00 68C0 – 0x00 68FF	64
ePWM5 + HRPWM5 Registers	0x00 6900 – 0x00 693F	64
ePWM6 + HRPWM6 Registers	0x00 6940 – 0x00 697F	64
ePWM7 + HRPWM7 Registers	0x00 6980 – 0x00 69BF	64
ePWM8 + HRPWM8 Registers	0x00 69C0 – 0x00 69FF	64
ePWM9 + HRPWM9 Registers	0x00 6600 – 0x00 663F	64
eCAP1 Registers	0x00 6A00 – 0x00 6A1F	32
eCAP2 Registers	0x00 6A20 – 0x00 6A3F	32
eCAP3 Registers	0x00 6A40 – 0x00 6A5F	32
eCAP4 Registers	0x00 6A60 – 0x00 6A7F	32
eCAP5 Registers	0x00 6A80 – 0x00 6A9F	32
eCAP6 Registers	0x00 6AA0 – 0x00 6ABF	32
eQEP1 Registers	0x00 6B00 – 0x00 6B3F	64
eQEP2 Registers	0x00 6B40 – 0x00 6B7F	64
eQEP3 Registers	0x00 6B80 – 0x00 6BBF	64
GPIO Registers	0x00 6F80 – 0x00 6FFF	128

Copyright © 2021 Texas Instruments Incorporated

Table 8-25. Peripheral Frame 2 Registers

NAME	ADDRESS RANGE	SIZE (x16)
System Control Registers	0x00 7010 – 0x00 702F	32
SPI-A Registers	0x00 7040 – 0x00 704F	16
SCI-A Registers	0x00 7050 – 0x00 705F	16
External Interrupt Registers	0x00 7070 – 0x00 707F	16
SCI-B Registers	0x00 7750 – 0x00 775F	16
SCI-C Registers	0x00 7770 – 0x00 777F	16
SPI-D Registers	0x00 7780 – 0x00 778F	16
I2C-A Registers	0x00 7900 – 0x00 793F	64

Table 8-26. Peripheral Frame 3 Registers

NAME	ADDRESS RANGE	SIZE (x16)
McBSP-A Registers	0x00 5000 – 0x00 503F	64
McBSP-B Registers	0x00 5040 – 0x00 507F	64

Copyright © 2021 Texas Instruments Incorporated

8.4.1 Device Emulation Registers

These registers are used to control the protection mode of the C28x CPU and to monitor some critical device signals. The registers are defined in Table 8-27.

Table 8-27. Device Emulation Registers

NAME	ADDRESS RANGE	SIZE (x16)	DESCRIPTION		
DEVICECNF	0x0880 0x0881	2	Device Configuration Register		
PARTID	0x0882	1	Part ID Register	TMS320C28346	0xFFD0
				TMS320C28345	0xFFD1
				TMS320C28344	0xFFD2
				TMS320C28343	0xFFD3
				TMS320C28342	0xFFD4
				TMS320C28341	0xFFD5
REVID	0x0883	1	Revision ID Register	0x0000 - Silicon Rev. 0 - TMS	
PROTSTART	0x0884	1	Block Protection Start Address Register		
PROTRANGE	0x0885	1	Block Protection Range Address Register		

Copyright © 2021 Texas Instruments Incorporated

8.5 Interrupts

Figure 8-24 shows how the various interrupt sources are multiplexed.

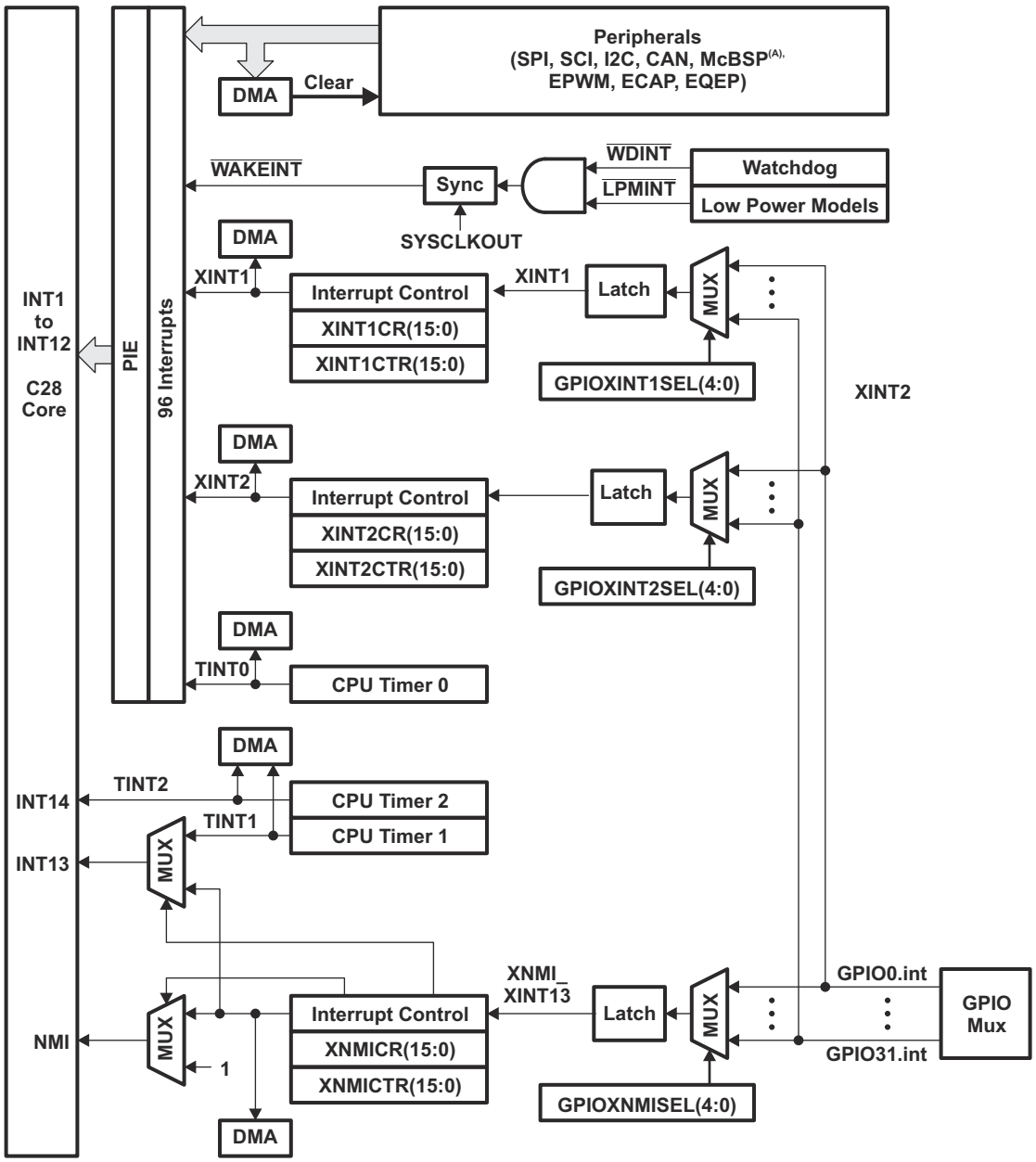

A. DMA-accessible

Figure 8-24. External and PIE Interrupt Sources

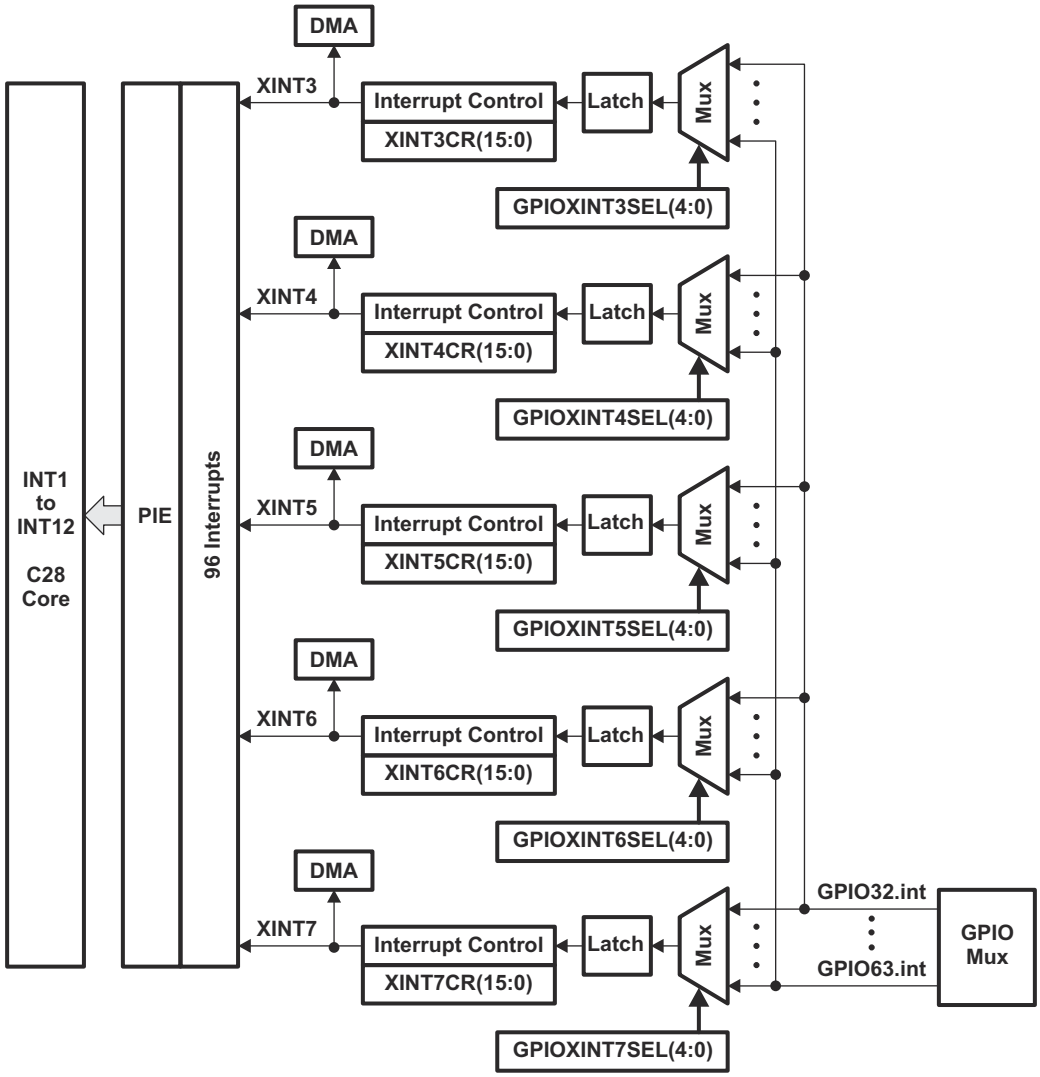

Figure 8-25. External Interrupts

Eight PIE block interrupts are grouped into one CPU interrupt. In total, 12 CPU interrupt groups, with 8 interrupts per group equals 96 possible interrupts. On the C2834x devices, 64 of these are used by peripherals as shown in Table 8-28.

The TRAP #VectorNumber instruction transfers program control to the interrupt service routine corresponding to the vector specified. TRAP #0 tries to transfer program control to the address pointed to by the reset vector. The PIE vector table does not, however, include a reset vector. Therefore, TRAP #0 should not be used when the PIE is enabled. Doing so will result in undefined behavior.

When the PIE is enabled, TRAP #1 to TRAP #12 will transfer program control to the interrupt service routine corresponding to the first vector within the PIE group. For example: TRAP #1 fetches the vector from INT1.1, TRAP #2 fetches the vector from INT2.1, and so forth.

Copyright © 2021 Texas Instruments Incorporated

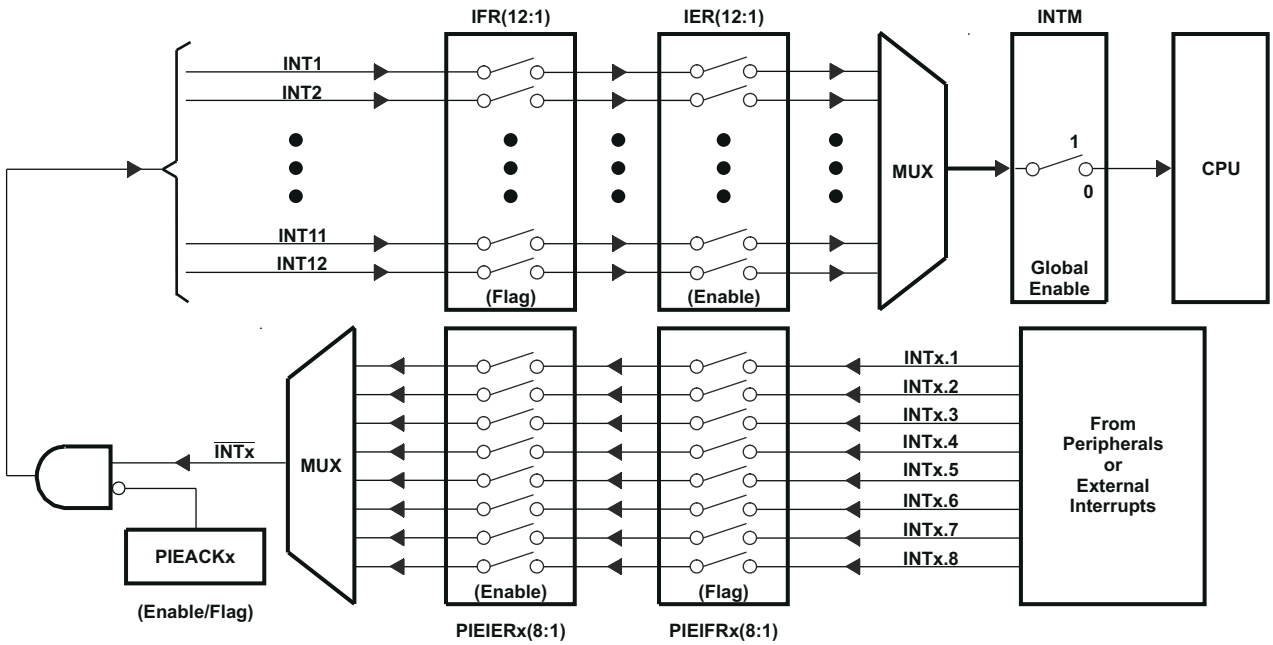

Figure 8-26. Multiplexing of Interrupts Using the PIE Block

Table 8-28. PIE Peripheral Interrupts (1)

CPU INTERRUPTS	PIE INTERRUPTS							
	INTx.8	INTx.7	INTx.6	INTx.5	INTx.4	INTx.3	INTx.2	INTx.1
INT1	WAKEINT (LPM/WD)	TINT0 (TIMER 0)	Reserved	XINT2	XINT1	Reserved	Reserved	Reserved
INT2	EPWM8_TZINT (ePWM8)	EPWM7_TZINT (ePWM7)	EPWM6_TZINT (ePWM6)	EPWM5_TZINT (ePWM5)	EPWM4_TZINT (ePWM4)	EPWM3_TZINT (ePWM3)	EPWM2_TZINT (ePWM2)	EPWM1_TZINT (ePWM1)
INT3	EPWM8_INT (ePWM8)	EPWM7_INT (ePWM7)	EPWM6_INT (ePWM6)	EPWM5_INT (ePWM5)	EPWM4_INT (ePWM4)	EPWM3_INT (ePWM3)	EPWM2_INT (ePWM2)	EPWM1_INT (ePWM1)
INT4	Reserved	Reserved	ECAP6_INT (eCAP6)	ECAP5_INT (eCAP5)	ECAP4_INT (eCAP4)	ECAP3_INT (eCAP3)	ECAP2_INT (eCAP2)	ECAP1_INT (eCAP1)
INT5	Reserved	Reserved	Reserved	Reserved	Reserved	EQEP3_INT (eQEP3)	EQEP2_INT (eQEP2)	EQEP1_INT (eQEP1)
INT6	SPITXINTD (SPI-D)	SPIRXINTD (SPI-D)	MXINTA (McBSP-A)	MRINTA (McBSP-A)	MXINTB (McBSP-B)	MRINTB (McBSP-B)	SPITXINTA (SPI-A)	SPIRXINTA (SPI-A)
INT7	Reserved	Reserved	DINTCH6 (DMA)	DINTCH5 (DMA)	DINTCH4 (DMA)	DINTCH3 (DMA)	DINTCH2 (DMA)	DINTCH1 (DMA)
INT8	Reserved	Reserved	SCITXINTC (SCI-C)	SCIRXINTC (SCI-C)	Reserved	Reserved	I2CINT2A (I2C-A)	I2CINT1A (I2C-A)
INT9	ECAN1_INTB (CAN-B)	ECAN0_INTB (CAN-B)	ECAN1_INTA (CAN-A)	ECAN0_INTA (CAN-A)	SCITXINTB (SCI-B)	SCIRXINTB (SCI-B)	SCITXINTA (SCI-A)	SCIRXINTA (SCI-A)
INT10	Reserved	Reserved	Reserved	Reserved	Reserved	Reserved	Reserved	EPWM9_TZINT (ePWM9)
INT11	Reserved	Reserved	Reserved	Reserved	Reserved	Reserved	Reserved	EPWM9_INT (ePWM9)
INT12	LUF (FPU)	LVF (FPU)	Reserved	XINT7	XINT6	XINT5	XINT4	XINT3

(1) Out of the 96 possible interrupts, 64 interrupts are currently used. The remaining interrupts are reserved for future devices. These interrupts can be used as software interrupts if they are enabled at the PIEIFRx level, provided none of the interrupts within the group is being used by a peripheral. Otherwise, interrupts coming in from peripherals may be lost by accidentally clearing their flag while modifying the PIEIFR. To summarize, there is one safe case when the reserved interrupts could be used as software interrupts:
1) No peripheral within the group is asserting interrupts.

Copyright © 2021 Texas Instruments Incorporated

Table 8-29. PIE Configuration and Control Registers

NAME	ADDRESS	SIZE (x16)	DESCRIPTION(1)
PIECTRL	0x0CE0	1	PIE, Control Register
PIEACK	0x0CE1	1	PIE, Acknowledge Register
PIEIER1	0x0CE2	1	PIE, INT1 Group Enable Register
PIEIFR1	0x0CE3	1	PIE, INT1 Group Flag Register
PIEIER2	0x0CE4	1	PIE, INT2 Group Enable Register
PIEIFR2	0x0CE5	1	PIE, INT2 Group Flag Register
PIEIER3	0x0CE6	1	PIE, INT3 Group Enable Register
PIEIFR3	0x0CE7	1	PIE, INT3 Group Flag Register
PIEIER4	0x0CE8	1	PIE, INT4 Group Enable Register
PIEIFR4	0x0CE9	1	PIE, INT4 Group Flag Register
PIEIER5	0x0CEA	1	PIE, INT5 Group Enable Register
PIEIFR5	0x0CEB	1	PIE, INT5 Group Flag Register
PIEIER6	0x0CEC	1	PIE, INT6 Group Enable Register
PIEIFR6	0x0CED	1	PIE, INT6 Group Flag Register
PIEIER7	0x0CEE	1	PIE, INT7 Group Enable Register
PIEIFR7	0x0CEF	1	PIE, INT7 Group Flag Register
PIEIER8	0x0CF0	1	PIE, INT8 Group Enable Register
PIEIFR8	0x0CF1	1	PIE, INT8 Group Flag Register
PIEIER9	0x0CF2	1	PIE, INT9 Group Enable Register
PIEIFR9	0x0CF3	1	PIE, INT9 Group Flag Register
PIEIER10	0x0CF4	1	PIE, INT10 Group Enable Register
PIEIFR10	0x0CF5	1	PIE, INT10 Group Flag Register
PIEIER11	0x0CF6	1	PIE, INT11 Group Enable Register
PIEIFR11	0x0CF7	1	PIE, INT11 Group Flag Register
PIEIER12	0x0CF8	1	PIE, INT12 Group Enable Register
PIEIFR12	0x0CF9	1	PIE, INT12 Group Flag Register
Reserved	0x0CFA – 0x0CFF	6	Reserved

(1) The PIE configuration and control registers are not protected by EALLOW mode. The PIE vector table is protected.

Copyright © 2021 Texas Instruments Incorporated

8.5.1 External Interrupts

Table 8-30. External Interrupt Registers

NAME	ADDRESS	SIZE (x16)	DESCRIPTION
XINT1CR	0x00 7070	1	XINT1 configuration register
XINT2CR	0x00 7071	1	XINT2 configuration register
XINT3CR	0x00 7072	1	XINT3 configuration register
XINT4CR	0x00 7073	1	XINT4 configuration register
XINT5CR	0x00 7074	1	XINT5 configuration register
XINT6CR	0x00 7075	1	XINT6 configuration register
XINT7CR	0x00 7076	1	XINT7 configuration register
XNMICR	0x00 7077	1	XNMI configuration register
XINT1CTR	0x00 7078	1	XINT1 counter register
XINT2CTR	0x00 7079	1	XINT2 counter register
Reserved	0x707A – 0x707E	5	
XNMICTR	0x00 707F	1	XNMI counter register

Each external interrupt can be enabled or disabled or qualified using positive, negative, or both positive and negative edge. For more information, see the *TMS320x2834x Delfino System Control and Interrupts Reference Guide*.

Copyright © 2021 Texas Instruments Incorporated

8.6 System Control

This section describes the oscillator, PLL and clocking mechanisms, the watchdog function and the low-power modes. Figure 8-27 shows the various clock and reset domains that will be discussed.

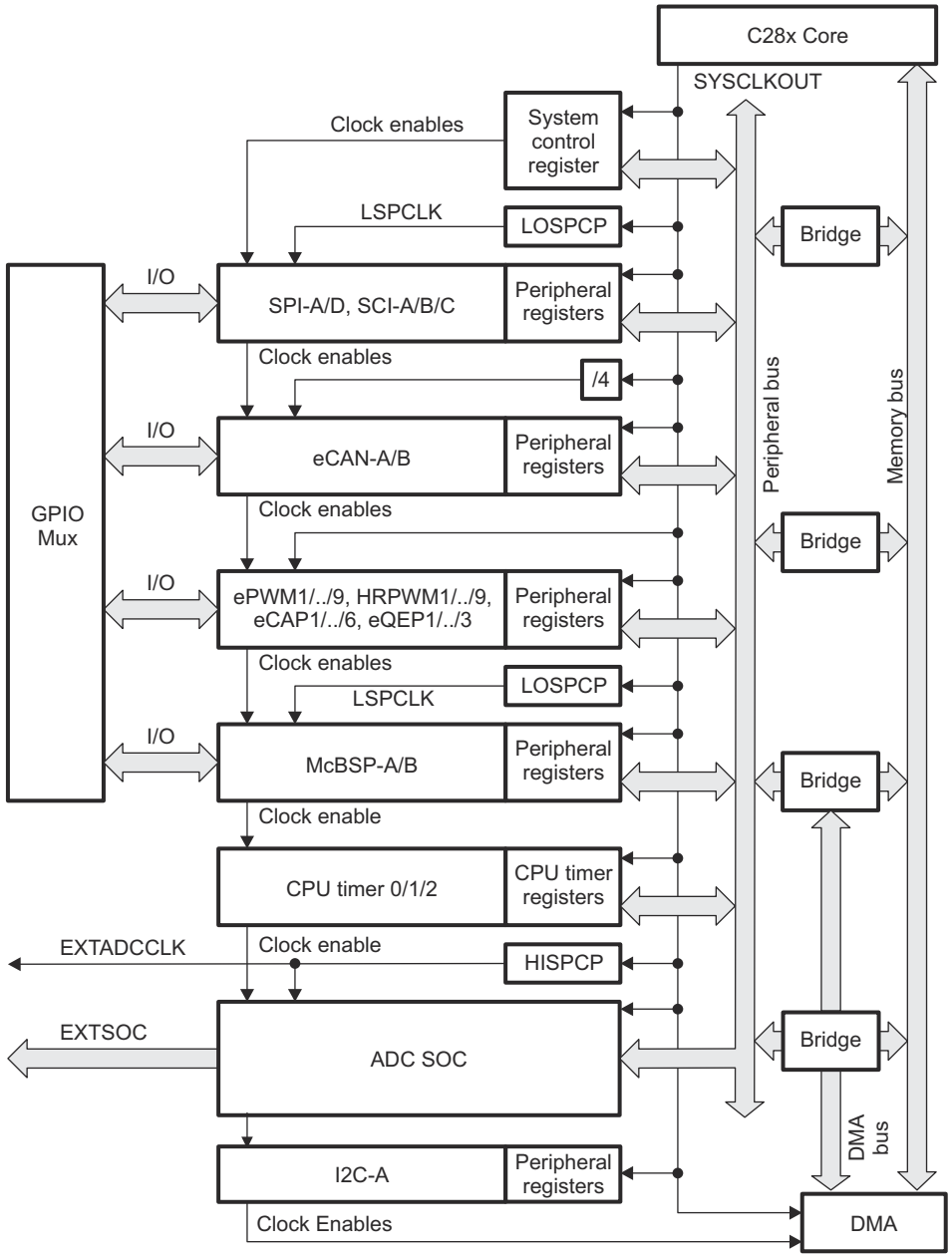

Figure 8-27. Clock and Reset Domains

Note

There is a 2-SYSCLKOUT cycle delay from when the write to the PCLKCR0, PCLKCR1, and PCLKCR2 registers (enables peripheral clocks) occurs to when the action is valid. This delay must be considered before trying to access the peripheral configuration registers.

Copyright © 2021 Texas Instruments Incorporated

The PLL, clocking, watchdog and low-power modes, are controlled by the registers listed in Table 8-31.

Table 8-31. PLL, Clocking, Watchdog, and Low-Power Mode Registers

NAME	ADDRESS	SIZE (x16)	DESCRIPTION
PLLSTS	0x00 7011	1	PLL Status Register
Reserved	0x00 7012 – 0x00 7018	7	Reserved
PCLKCR2	0x00 7019	1	Peripheral Clock Control Register 2
HISPCP	0x00 701A	1	High-Speed Peripheral Clock Prescaler Register
LOSPCP	0x00 701B	1	Low-Speed Peripheral Clock Prescaler Register
PCLKCR0	0x00 701C	1	Peripheral Clock Control Register 0
PCLKCR1	0x00 701D	1	Peripheral Clock Control Register 1
LPMCR0	0x00 701E	1	Low-Power Mode Control Register 0
Reserved	0x00 701F	1	Reserved
PCLKCR3	0x00 7020	1	Peripheral Clock Control Register 3
PLLCR	0x00 7021	1	PLL Control Register
SCSR	0x00 7022	1	System Control and Status Register
WDCNTR	0x00 7023	1	Watchdog Counter Register
Reserved	0x00 7024	1	Reserved
WDKEY	0x00 7025	1	Watchdog Reset Key Register
Reserved	0x00 7026 – 0x00 7028	3	Reserved
WDCR	0x00 7029	1	Watchdog Control Register
Reserved	0x00 702A – 0x00 702C	3	Reserved
EXTSOCCFG	0x00 702D	1	External ADC SOC Configuration Register
Reserved	0x00 702E	1	Reserved

Copyright © 2021 Texas Instruments Incorporated

8.6.1 OSC and PLL Block

Figure 8-28 shows the OSC and PLL block.

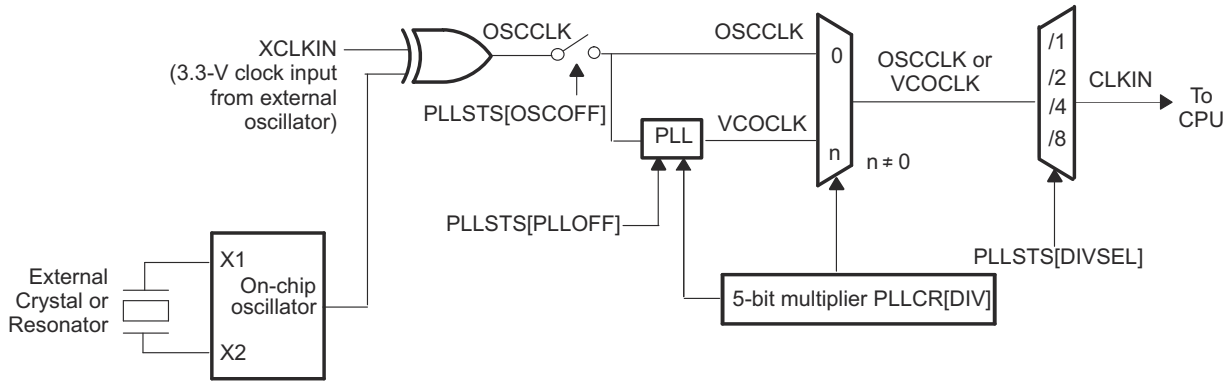

Figure 8-28. OSC and PLL Block Diagram

The on-chip oscillator circuit enables a crystal/resonator to be attached to the C2834x devices using the X1 and X2 pins. If the on-chip oscillator is not used, an external oscillator can be used in either one of the following configurations:

- A 3.3-V external oscillator can be directly connected to the XCLKIN pin. The X2 pin should be left unconnected and the X1 pin tied to V_{SSK} . The logic-high level in this case should not exceed V_{DDIO}.
- A 1.8-V external oscillator can be directly connected to the X1 pin. The X2 pin should be left unconnected and the XCLKIN pin tied to V_{SS} . The logic-high level in this case should not exceed V_{DD18} .

The three possible input-clock configurations are shown in Figure 8-29 to Figure 8-31.

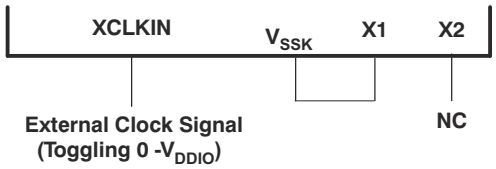

Figure 8-29. Using a 3.3-V External Oscillator

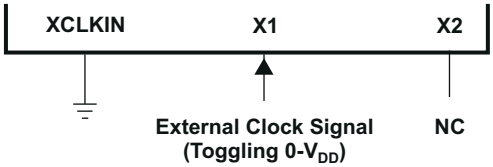

Figure 8-30. Using a 1.8-V External Oscillator

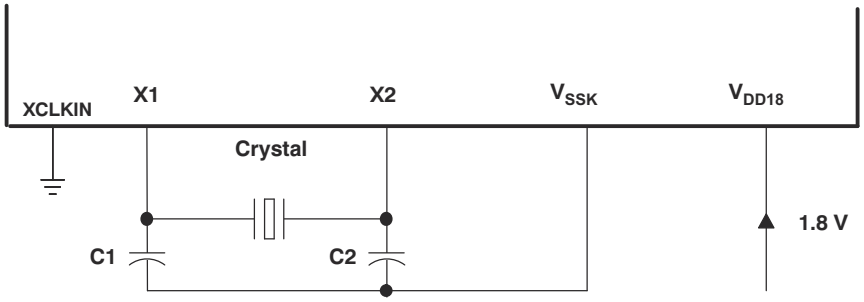

Figure 8-31. Using the Internal Oscillator

Copyright © 2021 Texas Instruments Incorporated

8.6.1.1 External Reference Oscillator Clock Option

The on-chip oscillator requires an external crystal to be connected across the X1 and X2 pins.

The connection of the required circuit, consisting of the crystal and two load capacitors, is shown in Figure 8-31. The load capacitors, C_1 and C_2, must be chosen such that the equation below is satisfied (typical values are on the order of C1 = C2 = 10 pF). C_L in the equation is the load specified for the crystal. All discrete components used to implement the oscillator circuit must be placed as close as possible to the associated oscillator pins (X1, X2, and V_{SSK}).

Note

The external crystal load capacitors must be connected only to the oscillator ground pin (V_{SSK}). Do not connect to board ground (V_{SS}).

$$C_L = \frac{C_1 C_2}{(C_1 + C_2)}$$

Where: C_L equals the crystal load capacitance.

TI recommends that customers have the crystal vendor characterize the operation of their device with the MCU chip. The crystal vendor has the equipment and expertise to tune the crystal circuit. The vendor can also advise the customer regarding the proper component values that will produce proper start up and stability over the entire operating range.

8.6.1.2 PLL-Based Clock Module

The devices have an on-chip, PLL-based clock module. This module provides all the necessary clocking signals for the device, as well as control for low-power mode entry. The PLL has a 5-bit ratio control PLLCR[DIV] to select different CPU clock rates. The watchdog module should be disabled before writing to the PLLCR register. It can be re-enabled (if need be) after the PLL module has stabilized. The input clock and PLLCR[DIV] bits should be chosen in such a way that the output frequency of the PLL (VCOCLK) falls between 400 MHz and 600 MHz. The PLLSTS[DIVSEL] bit should be selected such that SYSCLKOUT(CLKIN) does not exceed the maximum operating frequency allowed for the device (300 MHz or 200 MHz). For example, suppose it is desired to operate a 300-MHz device at 100 MHz using a 20-MHz OSCCLK input (that is, for power savings). The PLL should be configured for OSCCLK * 20, which produces VCOCLK = 400 MHz. PLLSTS[DIVSEL] should then be configured for /4 mode, resulting in the desired 100-MHz CLKIN to the CPU. The PLL should not be configured for OSCCLK * 10 with PLLSTS[DIVSEL] set for /2 mode. This combination would produce VCOCLK = 200 MHz, which does not fall within the required 400 MHz to 600 MHz range.

Table 8-32. PLL Settings (1)

PLLCR[DIV] VALUE(3) (4)	PLLSTS[DIVSEL] = 0	PLLSTS[DIVSEL] = 1	SYSCLKOUT (CLKIN)	
			PLLSTS[DIVSEL] = 2	PLLSTS[DIVSEL] = 3 (2)
00000 (PLL bypass)	OSCCLK/8 (Default)	OSCCLK/4	OSCCLK/2	OSCCLK
00001	(OSCCLK * 2)/8	(OSCCLK * 2)/4	(OSCCLK * 2)/2	–
00010	(OSCCLK * 3)/8	(OSCCLK * 3)/4	(OSCCLK * 3)/2	–
00011	(OSCCLK * 4)/8	(OSCCLK * 4)/4	(OSCCLK * 4)/2	–
00100	(OSCCLK * 5)/8	(OSCCLK * 5)/4	(OSCCLK * 5)/2	–
00101	(OSCCLK * 6)/8	(OSCCLK * 6)/4	(OSCCLK * 6)/2	–
00110	(OSCCLK * 7)/8	(OSCCLK * 7)/4	(OSCCLK * 7)/2	–
00111	(OSCCLK * 8)/8	(OSCCLK * 8)/4	(OSCCLK * 8)/2	–
01000	(OSCCLK * 9)/8	(OSCCLK * 9)/4	(OSCCLK * 9)/2	–
01001	(OSCCLK * 10)/8	(OSCCLK * 10)/4	(OSCCLK * 10)/2	–
01010	(OSCCLK * 11)/8	(OSCCLK * 11)/4	(OSCCLK * 11)/2	–

Copyright © 2021 Texas Instruments Incorporated

Table 8-32. PLL Settings (1) (continued)

PLLCR[DIV] VALUE(3) (4)	PLLSTS[DIVSEL] = 0	PLLSTS[DIVSEL] = 1	SYSCLKOUT (CLKIN)	
			PLLSTS[DIVSEL] = 2	PLLSTS[DIVSEL] = 3 (2)
01011 – 11111	(OSCCLK * 12)/8 – (OSCCLK * 32)/8	(OSCCLK * 12)/4 – (OSCCLK * 32)/4	(OSCCLK * 12)/2 – (OSCCLK * 32)/2	–

(1) PLLSTS[DIVSEL] must be 0 before writing to the PLLCR and must be set only to 1 or 2 after PLLSTS[PLLLOCKS] = 1. At reset, PLLSTS[DIVSEL] is configured for /8. The boot ROM changes this to /2 or /1, depending on the boot option.

(2) PLLSTS[DIVSEL] = 3 should be used only when the PLL is bypassed or off.

(3) The PLL control register (PLLCR) and PLL Status Register (PLLSTS) are reset to their default state by the $\overline{\text{XRS}}$ signal or a watchdog reset only. A reset issued by the debugger or the missing clock detect logic have no effect.

(4) This register is EALLOW protected. See the *TMS320x2834x Delfino System Control and Interrupts Reference Guide* for more information.

Copyright © 2021 Texas Instruments Incorporated

Table 8-33. CLKIN Divide Options

PLLSTS [DIVSEL]	CLKIN DIVIDE
0	/8
1	/4
2	/2
3	/1

The PLL-based clock module provides two modes of operation:

- Crystal-operation - This mode allows the use of an external crystal/resonator to provide the time base to the device.
- External clock source operation - This mode allows the internal oscillator to be bypassed. The device clocks are generated from an external clock source input on the X1 or the XCLKIN pin.

Table 8-34. Possible PLL Configuration Modes

PLL MODE	REMARKS	PLLSTS[DIVSEL](1)	CLKIN AND SYSCLKOUT
PLL Off	Invoked by the user setting the PLLOFF bit in the PLLSTS register. The PLL block is disabled in this mode. This can be useful to reduce system noise and for low power operation. The PLLCR register must first be set to 0x0000 (PLL Bypass) before entering this mode. The CPU clock (CLKIN) is derived directly from the input clock on either X1/X2, X1 or XCLKIN.	0 1 2 3	OSCCLK/8 OSCCLK/4 OSCCLK/2 OSCCLK/1
PLL Bypass	PLL Bypass is the default PLL configuration upon power up or after an external reset ($\overline{\text{XRS}}$). This mode is selected when the PLLCR register is set to 0x0000 or while the PLL locks to a new frequency after the PLLCR register has been modified. In this mode, the PLL itself is bypassed but the PLL is not turned off.	0 1 2 3	OSCCLK/8 OSCCLK/4 OSCCLK/2 OSCCLK/1
PLL Enable	Achieved by writing a nonzero value n into the PLLCR register. Upon writing to the PLLCR the device will switch to PLL Bypass mode until the PLL locks.	0 1 2 3	OSCCLK*n/8 OSCCLK*n/4 OSCCLK*n/2 –(2)

(1) PLLSTS[DIVSEL] must be 0 before writing to the PLLCR and must be set to 1 or 2 only after PLLSTS[PLLLOCKS] = 1. See the *TMS320x2834x Delfino System Control and Interrupts Reference Guide* for more information.

(2) PLLSTS[DIVSEL] should not be set to /1 mode while the PLL is enabled and not bypassed.

8.6.1.3 Loss of Input Clock

Applications in which the correct CPU operating frequency is absolutely critical should implement a mechanism by which the MCU will be held in reset, should the input clocks ever fail. For example, an R-C circuit may be used to trigger the $\overline{\text{XRS}}$ pin of the MCU, should the capacitor ever get fully charged. An I/O pin may be used to discharge the capacitor on a periodic basis to prevent it from getting fully charged.

Copyright © 2021 Texas Instruments Incorporated

8.6.2 Watchdog Block

The watchdog block on the C2834x device is similar to the one used on the 240x and 281x devices. The watchdog module generates an output pulse, 512 oscillator clocks wide (OSCCLK), whenever the 8-bit watchdog up counter has reached its maximum value. To prevent this, the user disables the counter or the software must periodically write a 0x55 + 0xAA sequence into the watchdog key register which will reset the watchdog counter. Figure 8-32 shows the various functional blocks within the watchdog module.

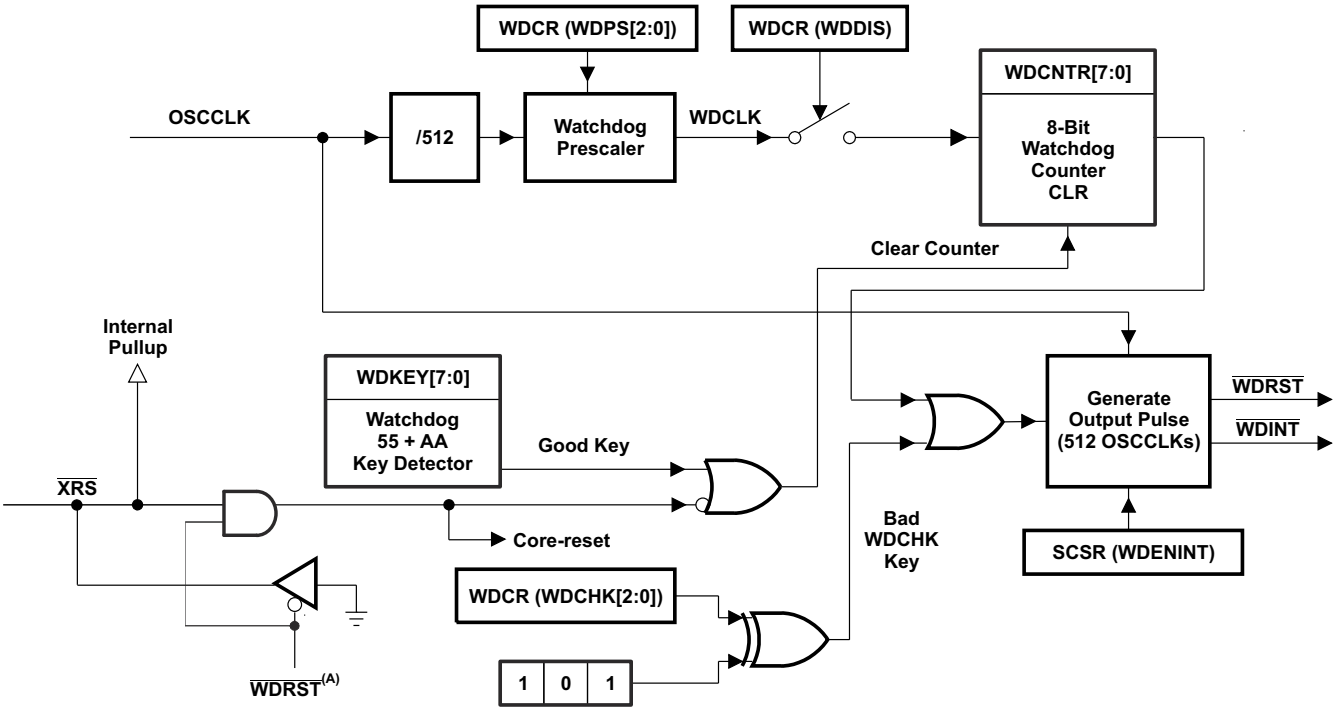

A. The WDRST signal is driven low for 512 OSCCLK cycles.

Figure 8-32. Watchdog Module

The WDINT signal enables the watchdog to be used as a wakeup from IDLE/STANDBY mode.

In STANDBY mode, all peripherals are turned off on the device. The only peripheral that remains functional is the watchdog. The WATCHDOG module will run off OSCCLK. The WDINT signal is fed to the LPM block so that it can wake the device from STANDBY (if enabled). See Section 8.7, Low-Power Modes Block, for more details.

In IDLE mode, the WDINT signal can generate an interrupt to the CPU, through the PIE, to take the CPU out of IDLE mode.

In HALT mode, this feature cannot be used because the oscillator (and PLL) are turned off and hence so is the WATCHDOG.

Copyright © 2021 Texas Instruments Incorporated

8.7 Low-Power Modes Block

The low-power modes on the C2834x devices are similar to the 240x devices. Table 8-35 summarizes the various modes.

Table 8-35. Low-Power Modes

MODE	LPMCR0(1:0)	OSCCLK	CLKIN	SYSCLKOUT	EXIT(1)
IDLE	00	On	On	On(2)	$\overline{XRS}$, watchdog interrupt, any enabled interrupt, XNMI
STANDBY	01	On (watchdog still running)	Off	Off	$\overline{XRS}$, watchdog interrupt, GPIO Port A signal, debugger(3), XNMI
HALT	1X	Off (oscillator and PLL turned off, watchdog not functional)	Off	Off	$\overline{XRS}$, GPIO port A signal, XNMI, debugger(3)

(1) The EXIT column lists which signals or under what conditions the low-power mode will be exited. A low signal, on any of the signals, will exit the low power condition. This signal must be kept low long enough for an interrupt to be recognized by the device. Otherwise, the low-power mode will not be exited and the device will go back into the indicated low-power mode.

(2) The IDLE mode on the C28x behaves differently than on the 24x/240x. On the C28x, the clock output from the CPU (SYSCLKOUT) is still functional while on the 24x/240x the clock is turned off.

(3) On the C28x, the JTAG port can still function even if the CPU clock (CLKIN) is turned off.

The various low-power modes operate as follows:

IDLE mode:	This mode is exited by any enabled interrupt or an XNMI that is recognized by the processor. The LPM block performs no tasks during this mode as long as the LPMCR0(LPM) bits are set to 0,0.
STANDBY mode:	Any GPIO port A signal (GPIO[31:0]) can wake the device from STANDBY mode. The user must select which signal(s) will wake the device in the GPIOLPMSEL register. The selected signal(s) are also qualified by the OSCCLK before waking the device. The number of OSCCLKs is specified in the LPMCR0 register.
HALT mode:	Only the $\overline{XRS}$ and any GPIO port A signal (GPIO[31:0]) can wake the device from HALT mode. The user selects the signal in the GPIOLPMSEL register.

Note

The low-power modes do not affect the state of the output pins (PWM pins included). They will be in whatever state the code left them in when the IDLE instruction was executed. See the *TMS320x2834x Delfino System Control and Interrupts Reference Guide* for more details.

Copyright © 2021 Texas Instruments Incorporated

9 Applications, Implementation, and Layout

Note

Information in the following applications sections is not part of the TI component specification, and TI does not warrant its accuracy or completeness. TI's customers are responsible for determining suitability of components for their purposes, as well as validating and testing their design implementation to confirm system functionality.

9.1 TI Design or Reference Design

TI Designs Reference Design Library is a robust reference design library spanning analog, embedded processor, and connectivity. Created by TI experts to help you jump start your system design, all TI Designs include schematic or block diagrams, BOMs, and design files to speed your time to market. Search and download designs at TIDesigns.

C2000 Resolver to Digital Conversion Kit
This is a motherboard-style Resolver to Digital conversion kit used to experiment with various C2000™ microcontrollers for software-based resolver to digital conversion using on-chip ADCs. The Resolver Kit also allows interface to resolvers and inverter control processor.

Copyright © 2021 Texas Instruments Incorporated

10 Device and Documentation Support

10.1 Getting Started

This section gives a brief overview of the steps to take when first developing for a C28x device. For more detail on each of these steps, see the following:

- C2000 Real-Time Control MCUs – Getting started
- C2000 Real-Time Control MCUs – Tools & software
- Motor drive and control
- Digital power

10.2 Device and Development Support Tool Nomenclature

To designate the stages in the product development cycle, TI assigns prefixes to the part numbers of all TMS320™ MCU devices and support tools. Each TMS320™ commercial family member has one of three prefixes: TMX, TMP, or TMS (for example, **TMS** 320C28345). Texas Instruments recommends two of three possible prefix designators for its support tools: TMDX and TMDS. These prefixes represent evolutionary stages of product development from engineering prototypes (TMX/TMDX) through fully qualified production devices/ tools (TMS/TMDS).

Device development evolutionary flow:

TMX	Experimental device that is not necessarily representative of the final device's electrical specifications
TMP	Final silicon die that conforms to the device's electrical specifications but has not completed quality and reliability verification
TMS	Fully qualified production device

Support tool development evolutionary flow:

TMDX	Development-support product that has not yet completed Texas Instruments internal qualification testing
TMDS	Fully qualified development-support product

TMX and TMP devices and TMDX development-support tools are shipped against the following disclaimer: "Developmental product is intended for internal evaluation purposes."

TMS devices and TMDS development-support tools have been characterized fully, and the quality and reliability of the device have been demonstrated fully. TI's standard warranty applies.

Predictions show that prototype devices (TMX or TMP) have a greater failure rate than the standard production devices. Texas Instruments recommends that these devices not be used in any production system because their expected end-use failure rate still is undefined. Only qualified production devices are to be used.

TI device nomenclature also includes a suffix with the device family name. This suffix indicates the package type (for example, ZFE) and temperature range (for example, T). Figure 10-1 provides a legend for reading the complete device name for any family member.

For device part numbers and further ordering information, see the Package Option Addendum of this document, the TI website (www.ti.com), or contact your TI sales representative.

For additional description of the device nomenclature markings on the die, see the *TMS320C2834x Delfino™ MCUs Silicon Errata* .

Copyright © 2021 Texas Instruments Incorporated

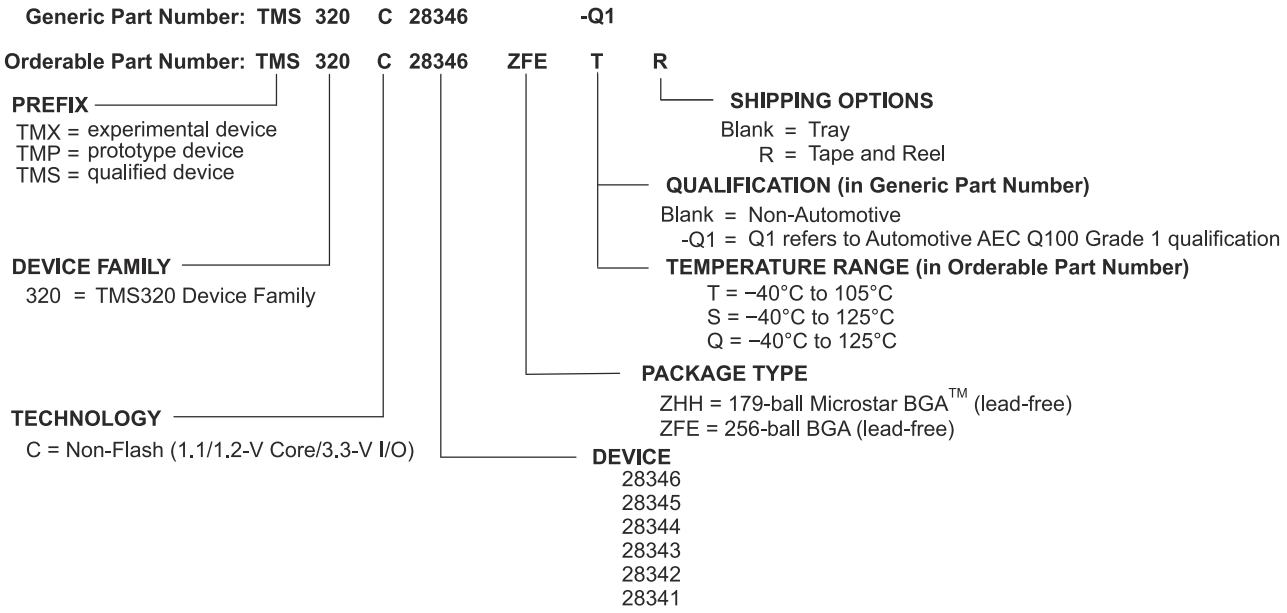

Figure 10-1. Example of C2834x Device Nomenclature

Copyright © 2021 Texas Instruments Incorporated

10.3 Tools and Software

TI offers an extensive line of development tools. Some of the tools and software to evaluate the performance of the device, generate code, and develop solutions are listed below. To view all available tools and software for C2000™ real-time control MCUs, visit the C2000 MCU Tools and Software page.

Design Kits and Evaluation Modules

C2000 Delfino MCUs F28377S LaunchPad Development Kit
The C2000™ Delfino™ MCUs LaunchPad™ development kit is an inexpensive evaluation platform that provides designers with a low-cost development kit for high-performance digital control applications. This tool provides a great starting point for development of many high-end digital control applications such as industrial drives and automation; power line communications; solar inverters; and more.

Delfino C28343 controlCARD
The C28343 controlCARD allows users to easily evaluate all the functionality of the 200-MHz C28343 floating-point controller and is compatible with existing controlCARD tool kits. The card provides all the chip support necessary, needing only a 5-V supply to be fully functional. The controlCARD also has two onboard 12-bit ADCs and a 64KB EEPROM for nonvolatile program storage. Based on the standard DIM100 controlCARD form factor, it is pin-compatible with other C2000 controlCARDs.

Software

C2000 DesignDRIVE Software for Industrial Drives and Motor Control
The DesignDRIVE platform combines software solutions with DesignDRIVE Development Kits to make it easy to develop and evaluate solutions for many industrial drive and servo topologies. DesignDRIVE offers support for a wide variety of motor types, sensing technologies, position sensors and communications networks, including specific examples for vector control of motors, incorporating current, speed and position loops, to help developers jumpstart their evaluation and development. Based on the real-time control architecture of TI's C2000™ microcontrollers (MCUs), DesignDRIVE is ideal for the development of industrial inverter and servo drives used in robotics, computer numerical control machinery (CNC), elevators, materials conveyance and other industrial manufacturing applications.

powerSUITE Digital Power Supply Software Frequency Response Analyzer Tool for C2000™ MCUs
The Software Frequency Response Analyzer (SFRA) is one of several tools included in the powerSUITE Digital Power Supply Design Software Tools for C2000™ Microcontrollers. The SFRA includes a software library that enables developers to quickly measure the frequency response of their digital power converter. The SFRA library contains software functions that inject a frequency into the control loop and measure the response of the system using the C2000 MCUs' on-chip analog to digital converter (ADC). This process provides the plant frequency response characteristics and the open loop gain frequency response of the closed loop system. The user can then view the plant and open loop gain frequency response on a PC-based GUI. All of the frequency response data is exported into a CSV file, or optionally an Excel® spreadsheet, which can then be used to design the compensation loop using the Compensation Designer.

C2000Ware for C2000 MCUs
C2000Ware for C2000™ microcontrollers is a cohesive set of development software and documentation designed to minimize software development time. From device-specific drivers and libraries to device peripheral examples, C2000Ware provides a solid foundation to begin development and evaluation of your product.

Copyright © 2021 Texas Instruments Incorporated

Development Tools

C2000 Gang Programmer
The C2000 Gang Programmer is a C2000 device programmer that can program up to eight identical C2000 devices at the same time. The C2000 Gang Programmer connects to a host PC using a standard RS-232 or USB connection and provides flexible programming options that allow the user to fully customize the process.

Code Composer Studio™ (CCS) Integrated Development Environment (IDE) for C2000 Microcontrollers
Code Composer Studio is an integrated development environment (IDE) that supports TI's Microcontroller and Embedded Processors portfolio. Code Composer Studio comprises a suite of tools used to develop and debug embedded applications. It includes an optimizing C/C++ compiler, source code editor, project build environment, debugger, profiler, and many other features. The intuitive IDE provides a single user interface taking the user through each step of the application development flow. Familiar tools and interfaces allow users to get started faster than ever before. Code Composer Studio combines the advantages of the Eclipse software framework with advanced embedded debug capabilities from TI resulting in a compelling feature-rich development environment for embedded developers.

Models

Various models are available for download from the product Tools & Software pages. These include I/O Buffer Information Specification (IBIS) Models and Boundary-Scan Description Language (BSDL) Models. To view all available models, visit the Models section of the Tools & Software page for each device.

10.4 Documentation Support

To receive notification of documentation updates, navigate to the device product folder on ti.com. In the upper right corner, click on *Alert me* to register and receive a weekly digest of any product information that has changed. For change details, review the revision history included in any revised document.

The current documentation that describes the processor, related peripherals, and other technical collateral is listed below.

Errata

TMS320C2834x Delfino™ MCUs Silicon Errata describes the advisories and usage notes for different versions of silicon.

CPU User's Guides

TMS320C28x CPU and Instruction Set Reference Guide describes the central processing unit (CPU) and the assembly language instructions of the TMS320C28x fixed-point digital signal processors (DSPs). It also describes emulation features available on these DSPs.

TMS320C28x Extended Instruction Sets Technical Reference Manual describes the architecture, pipeline, and instruction set of the TMU, VCU-II, and FPU accelerators.

Peripheral Guides

C2000 Real-Time Control MCU Peripherals Reference Guide describes the peripheral reference guides of the 28x digital signal processors (DSPs).

TMS320x2834x Delfino System Control and Interrupts Reference Guide This document describes the various interrupts and system control features of the x2834x microcontroller (MCUs).

TMS320x2834x Delfino External Interface (XINTF) Reference Guide This document describes the XINTF, which is a nonmultiplexed asynchronous bus, as it is used on the x2834x device.

TMS320x2834x Delfino Boot ROM Reference Guide This document describes the purpose and features of the bootloader (factory-programmed boot-loading software) and provides examples of code. It also describes other contents of the device on-chip boot ROM and identifies where all of the information is located within that memory.

Copyright © 2021 Texas Instruments Incorporated

TMS320x2834x Delfino Multichannel Buffered Serial Port (McBSP) Reference Guide This document describes the McBSP available on the x2834x devices. The McBSPs allow direct interface between a microcontroller (MCU) and other devices in a system.

TMS320x2834x Delfino Direct Memory Access (DMA) Module Reference Guide This document describes the DMA on the x2834x microcontroller (MCUs).

TMS320x2834x Delfino Enhanced Pulse Width Modulator (ePWM) Module Reference Guide This document describes the main areas of the enhanced pulse width modulator that include digital motor control, switch mode power supply control, UPS (uninterruptible power supplies), and other forms of power conversion.

TMS320x2834x Delfino High Resolution Pulse Width Modulator (HRPWM) Reference Guide This document describes the operation of the high-resolution extension to the pulse width modulator (HRPWM).

TMS320x2834x Delfino Enhanced Capture (eCAP) Module Reference Guide This document describes the enhanced capture module. It includes the module description and registers.

TMS320x2834x Delfino Enhanced Quadrature Encoder Pulse (eQEP) Module Reference Guide This document describes the eQEP module, which is used for interfacing with a linear or rotary incremental encoder to get position, direction, and speed information from a rotating machine in high performance motion and position control systems. It includes the module description and registers.

TMS320x2834x Delfino Enhanced Controller Area Network (eCAN) Reference Guide This document describes the eCAN that uses established protocol to communicate serially with other controllers in electrically noisy environments.

TMS320x2834x Delfino Serial Communications Interface (SCI) Reference Guide This document describes the SCI, which is a 2-wire asynchronous serial port, commonly known as a UART. The SCI modules support digital communications between the CPU and other asynchronous peripherals that use the standard nonreturn-to-zero (NRZ) format.

TMS320x2834x Delfino Serial Peripheral Interface (SPI) Reference Guide This document describes the SPI - a high-speed synchronous serial input/output (I/O) port - that allows a serial bit stream of programmed length (1 to 16 bits) to be shifted into and out of the device at a programmed bit-transfer rate.

TMS320x2834x Delfino Inter-Integrated Circuit (I2C) Module Reference Guide This document describes the features and operation of the inter-integrated circuit (I2C) module.

Tools Guides

TMS320C28x Assembly Language Tools v20.2.0.LTS User's Guide describes the assembly language tools (assembler and other tools used to develop assembly language code), assembler directives, macros, common object file format, and symbolic debugging directives for the TMS320C28x device.

TMS320C28x Optimizing C/C++ Compiler v20.2.0.LTS User's Guide describes the TMS320C28x C/C++ compiler. This compiler accepts ANSI standard C/C++ source code and produces TMS320 DSP assembly language source code for the TMS320C28x device.

TMS320C28x DSP/BIOS 5.x Application Programming Interface (API) Reference Guide describes development using DSP/BIOS.

Application Reports

The SMT & packaging application notes website lists documentation on TI's surface mount technology (SMT) and application notes on a variety of packaging-related topics.

TMS320C28x FPU Primer provides an overview of the floating-point unit (FPU) in the C2000™ Delfino microcontroller devices.

Running an Application from Internal Flash Memory on the TMS320F28xxx DSP covers the requirements needed to properly configure application software for execution from on-chip flash memory. Requirements for both DSP/BIOS and non-DSP/BIOS projects are presented. Example code projects are included.

Copyright © 2021 Texas Instruments Incorporated

Programming TMS320x28xx and TMS320x28xxx Peripherals in C/C++ explores a hardware abstraction layer implementation to make C/C++ coding easier on 28x DSPs. This method is compared to traditional #define macros and topics of code efficiency and special case registers are also addressed.

Using PWM Output as a Digital-to-Analog Converter on a TMS320F280x Digital Signal Controller presents a method for using the on-chip pulse width modulated (PWM) signal generators on the TMS320F280x family of digital signal controllers as a digital-to-analog converter (DAC).

TMS320F280x Digital Signal Controller USB Connectivity using the TUSB3410 USB-to-UART Bridge Chip presents hardware connections as well as software preparation and operation of the development system using a simple communication echo program.

Using the Enhanced Quadrature Encoder Pulse (eQEP) Module in TMS320x280x, 28xxx as a Dedicated Capture provides a guide for the use of the eQEP module as a dedicated capture unit and is applicable to the TMS320x280x, 28xxx family of processors.

Using the ePWM Module for 0% - 100% Duty Cycle Control provides a guide for the use of the ePWM module to provide 0% to 100% duty cycle control and is applicable to the TMS320x280x family of processors.

TMS320x2833x/2823x to TMS320x2834x Delfino Migration Overview This application report describes differences between the Texas Instruments TMS320x2833x/2823x and the TMS320x2834x devices to assist in application migration.

Online Stack Overflow Detection on the TMS320C28x DSP presents the methodology for online stack overflow detection on the TMS320C28x DSP. C-source code is provided that contains functions for implementing the overflow detection on both DSP/BIOS and non-DSP/BIOS applications.

Semiconductor Packing Methodology describes the packing methodologies employed to prepare semiconductor devices for shipment to end users.

Calculating Useful Lifetimes of Embedded Processors provides a methodology for calculating the useful lifetime of TI embedded processors (EPs) under power when used in electronic systems. It is aimed at general engineers who wish to determine if the reliability of the TI EP meets the end system reliability requirement.

Semiconductor and IC Package Thermal Metrics describes traditional and new thermal metrics and puts their application in perspective with respect to system-level junction temperature estimation.

An Introduction to IBIS (I/O Buffer Information Specification) Modeling discusses various aspects of IBIS including its history, advantages, compatibility, model generation flow, data requirements in modeling the input/output structures and future trends.

10.5 Support Resources

TI E2E™ support forums are an engineer's go-to source for fast, verified answers and design help — straight from the experts. Search existing answers or ask your own question to get the quick design help you need.

Linked content is provided "AS IS" by the respective contributors. They do not constitute TI specifications and do not necessarily reflect TI's views; see TI's Terms of Use.

10.6 Trademarks

MicroStar BGA™, Delfino™, C2000™, Piccolo™, DSP/BIOS™, Code Composer Studio™, and TI E2E™ are trademarks of Texas Instruments.
Excel® is a registered trademark of Microsoft Corporation in the United States and/or other countries.
All trademarks are the property of their respective owners.

10.7 Electrostatic Discharge Caution



This integrated circuit can be damaged by ESD. Texas Instruments recommends that all integrated circuits be handled with appropriate precautions. Failure to observe proper handling and installation procedures can cause damage.

ESD damage can range from subtle performance degradation to complete device failure. Precision integrated circuits may be more susceptible to damage because very small parametric changes could cause the device not to meet its published specifications.

Copyright © 2021 Texas Instruments Incorporated

10.8 Glossary

TI Glossary This glossary lists and explains terms, acronyms, and definitions.

11 Mechanical, Packaging, and Orderable Information

11.1 Packaging Information

The following pages include mechanical, packaging, and orderable information. This information is the most current data available for the designated devices. This data is subject to change without notice and revision of this document. For browser-based versions of this data sheet, refer to the left-hand navigation.

Copyright © 2021 Texas Instruments Incorporated

PACKAGING INFORMATION

Orderable part number	Status (1)	Material type (2)	Package | Pins	Package qty | Carrier	RoHS (3)	Lead finish/ Ball material (4)	MSL rating/ Peak reflow (5)	Op temp (°C)	Part marking (6)
TMS320C28341ZAYT	Active	Production	NFBGA (ZAY) | 179	160 | EIAJ TRAY (5+1)	Yes	SNAGCU	Level-3-260C-168 HR	-40 to 105	TMS320 C28341ZAYT
TMS320C28341ZAYT.B	Active	Production	NFBGA (ZAY) | 179	160 | EIAJ TRAY (5+1)	Yes	SNAGCU	Level-3-260C-168 HR	-40 to 105	TMS320 C28341ZAYT
TMS320C28342ZFET	Active	Production	BGA (ZFE) | 256	90 | JEDEC TRAY (5+1)	Yes	SNAGCU	Level-3-260C-168 HR	-40 to 105	TMS 320C28342ZFET
TMS320C28342ZFET.B	Active	Production	BGA (ZFE) | 256	90 | JEDEC TRAY (5+1)	Yes	SNAGCU	Level-3-260C-168 HR	-40 to 105	TMS 320C28342ZFET
TMS320C28343ZAYT	Active	Production	NFBGA (ZAY) | 179	160 | JEDEC TRAY (5+1)	Yes	SNAGCU	Level-3-260C-168 HR	-40 to 105	TMS320 C28343ZAYT
TMS320C28343ZAYT.B	Active	Production	NFBGA (ZAY) | 179	160 | JEDEC TRAY (5+1)	Yes	SNAGCU	Level-3-260C-168 HR	-40 to 105	TMS320 C28343ZAYT
TMS320C28343ZFEQ	Active	Production	BGA (ZFE) | 256	90 | JEDEC TRAY (5+1)	Yes	SNAGCU	Level-3-260C-168 HR	-40 to 125	TMS 320C28343ZFEQ
TMS320C28343ZFEQ.B	Active	Production	BGA (ZFE) | 256	90 | JEDEC TRAY (5+1)	Yes	SNAGCU	Level-3-260C-168 HR	-40 to 125	TMS 320C28343ZFEQ
TMS320C28344ZFET	Active	Production	BGA (ZFE) | 256	90 | JEDEC TRAY (5+1)	Yes	SNAGCU	Level-3-260C-168 HR	-40 to 105	TMS 320C28344ZFET
TMS320C28344ZFET.B	Active	Production	BGA (ZFE) | 256	90 | JEDEC TRAY (5+1)	Yes	SNAGCU	Level-3-260C-168 HR	-40 to 105	TMS 320C28344ZFET
TMS320C28345ZAYT	Active	Production	NFBGA (ZAY) | 179	160 | EIAJ TRAY (5+1)	Yes	SNAGCU	Level-3-260C-168 HR	-40 to 105	TMS320 C28345ZAYT
TMS320C28345ZAYT.B	Active	Production	NFBGA (ZAY) | 179	160 | EIAJ TRAY (5+1)	Yes	SNAGCU	Level-3-260C-168 HR	-40 to 105	TMS320 C28345ZAYT
TMS320C28345ZFET	Active	Production	BGA (ZFE) | 256	90 | JEDEC TRAY (5+1)	Yes	SNAGCU	Level-3-260C-168 HR	-40 to 105	TMS 320C28345ZFET
TMS320C28345ZFET.B	Active	Production	BGA (ZFE) | 256	90 | JEDEC TRAY (5+1)	Yes	SNAGCU	Level-3-260C-168 HR	-40 to 105	TMS 320C28345ZFET
TMS320C28346ZFEQ	Active	Production	BGA (ZFE) | 256	90 | JEDEC TRAY (5+1)	Yes	SNAGCU	Level-3-260C-168 HR	-40 to 125	TMS 320C28346ZFEQ
TMS320C28346ZFEQ.B	Active	Production	BGA (ZFE) | 256	90 | JEDEC TRAY (5+1)	Yes	SNAGCU	Level-3-260C-168 HR	-40 to 125	TMS 320C28346ZFEQ

Orderable part number	Status (1)	Material type (2)	Package | Pins	Package qty | Carrier	RoHS (3)	Lead finish/ Ball material (4)	MSL rating/ Peak reflow (5)	Op temp (°C)	Part marking (6)
TMS320C28346ZFET	Active	Production	BGA (ZFE) | 256	90 | JEDEC TRAY (5+1)	Yes	SNAGCU	Level-3-260C-168 HR	-40 to 105	TMS 320C28346ZFET
TMS320C28346ZFET.B	Active	Production	BGA (ZFE) | 256	90 | JEDEC TRAY (5+1)	Yes	SNAGCU	Level-3-260C-168 HR	-40 to 105	TMS 320C28346ZFET
TMS320C28346ZFETR	Active	Production	BGA (ZFE) | 256	750 | LARGE T&R	Yes	SNAGCU	Level-3-260C-168 HR	-40 to 105	TMS320 C28346ZFET
TMS320C28346ZFETR.B	Active	Production	BGA (ZFE) | 256	750 | LARGE T&R	Yes	SNAGCU	Level-3-260C-168 HR	-40 to 105	TMS320 C28346ZFET

(1) **Status:** For more details on status, see our product life cycle.

(2) **Material type:** When designated, preproduction parts are prototypes/experimental devices, and are not yet approved or released for full production. Testing and final process, including without limitation quality assurance, reliability performance testing, and/or process qualification, may not yet be complete, and this item is subject to further changes or possible discontinuation. If available for ordering, purchases will be subject to an additional waiver at checkout, and are intended for early internal evaluation purposes only. These items are sold without warranties of any kind.

(3) **RoHS values:** Yes, No, RoHS Exempt. See the TI RoHS Statement for additional information and value definition.

(4) **Lead finish/Ball material:** Parts may have multiple material finish options. Finish options are separated by a vertical ruled line. Lead finish/Ball material values may wrap to two lines if the finish value exceeds the maximum column width.

(5) **MSL rating/Peak reflow:** The moisture sensitivity level ratings and peak solder (reflow) temperatures. In the event that a part has multiple moisture sensitivity ratings, only the lowest level per JEDEC standards is shown. Refer to the shipping label for the actual reflow temperature that will be used to mount the part to the printed circuit board.

(6) **Part marking:** There may be an additional marking, which relates to the logo, the lot trace code information, or the environmental category of the part.

Multiple part markings will be inside parentheses. Only one part marking contained in parentheses and separated by a "~" will appear on a part. If a line is indented then it is a continuation of the previous line and the two combined represent the entire part marking for that device.

Important Information and Disclaimer: The information provided on this page represents TI's knowledge and belief as of the date that it is provided. TI bases its knowledge and belief on information provided by third parties, and makes no representation or warranty as to the accuracy of such information. Efforts are underway to better integrate information from third parties. TI has taken and continues to take reasonable steps to provide representative and accurate information but may not have conducted destructive testing or chemical analysis on incoming materials and chemicals. TI and TI suppliers consider certain information to be proprietary, and thus CAS numbers and other limited information may not be available for release.

In no event shall TI's liability arising out of such information exceed the total purchase price of the TI part(s) at issue in this document sold by TI to Customer on an annual basis.

OTHER QUALIFIED VERSIONS OF TMS320C28343, TMS320C28343-Q1, TMS320C28346, TMS320C28346-Q1 :

- Catalog : TMS320C28343, TMS320C28346
- Automotive : TMS320C28343-Q1, TMS320C28346-Q1

NOTE: Qualified Version Definitions:

- Catalog - TI's standard catalog product
- Automotive - Q100 devices qualified for high-reliability automotive applications targeting zero defects

TRAY

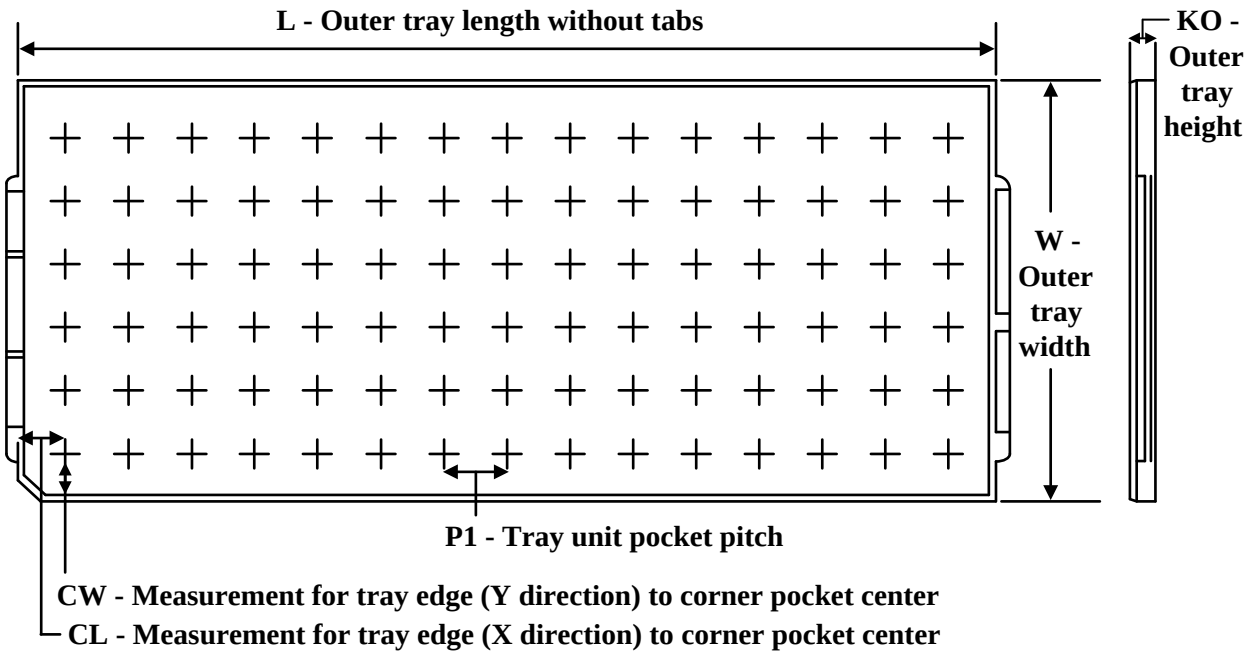

Chamfer on Tray corner indicates Pin 1 orientation of packed units.

*All dimensions are nominal

Device	Package Name	Package Type	Pins	SPQ	Unit array matrix	Max temperature (°C)	L (mm)	W (mm)	K0 (µm)	P1 (mm)	CL (mm)	CW (mm)
TMS320C28341ZAYT	ZAY	NFBGA	179	160	8 x 20	150	315	135.9	7620	15.4	11.2	19.65
TMS320C28341ZAYT.B	ZAY	NFBGA	179	160	8 x 20	150	315	135.9	7620	15.4	11.2	19.65
TMS320C28342ZFET	ZFE	BGA	256	90	6 X 15	150	315	135.9	7620	19.5	21	19.2
TMS320C28342ZFET.B	ZFE	BGA	256	90	6 X 15	150	315	135.9	7620	19.5	21	19.2
TMS320C28343ZAYT	ZAY	NFBGA	179	160	8 x 20	150	315	135.9	7620	15.4	11.2	19.65
TMS320C28343ZAYT.B	ZAY	NFBGA	179	160	8 x 20	150	315	135.9	7620	15.4	11.2	19.65
TMS320C28343ZFEQ	ZFE	BGA	256	90	6 X 15	150	315	135.9	7620	19.5	21	19.2
TMS320C28343ZFEQ.B	ZFE	BGA	256	90	6 X 15	150	315	135.9	7620	19.5	21	19.2
TMS320C28344ZFET	ZFE	BGA	256	90	6 X 15	150	315	135.9	7620	19.5	21	19.2
TMS320C28344ZFET.B	ZFE	BGA	256	90	6 X 15	150	315	135.9	7620	19.5	21	19.2
TMS320C28345ZAYT	ZAY	NFBGA	179	160	8 x 20	150	315	135.9	7620	15.4	11.2	19.65
TMS320C28345ZAYT.B	ZAY	NFBGA	179	160	8 x 20	150	315	135.9	7620	15.4	11.2	19.65
TMS320C28345ZFET	ZFE	BGA	256	90	6 X 15	150	315	135.9	7620	19.5	21	19.2
TMS320C28345ZFET.B	ZFE	BGA	256	90	6 X 15	150	315	135.9	7620	19.5	21	19.2
TMS320C28346ZFEQ	ZFE	BGA	256	90	6 X 15	150	315	135.9	7620	19.5	21	19.2
TMS320C28346ZFEQ.B	ZFE	BGA	256	90	6 X 15	150	315	135.9	7620	19.5	21	19.2
TMS320C28346ZFET	ZFE	BGA	256	90	6 X 15	150	315	135.9	7620	19.5	21	19.2

Device	Package Name	Package Type	Pins	SPQ	Unit array matrix	Max temperature (°C)	L (mm)	W (mm)	K0 (µm)	P1 (mm)	CL (mm)	CW (mm)
TMS320C28346ZFET.B	ZFE	BGA	256	90	6 X 15	150	315	135.9	7620	19.5	21	19.2

ZFE (S–PBGA–N256) PLASTIC BALL GRID ARRAY

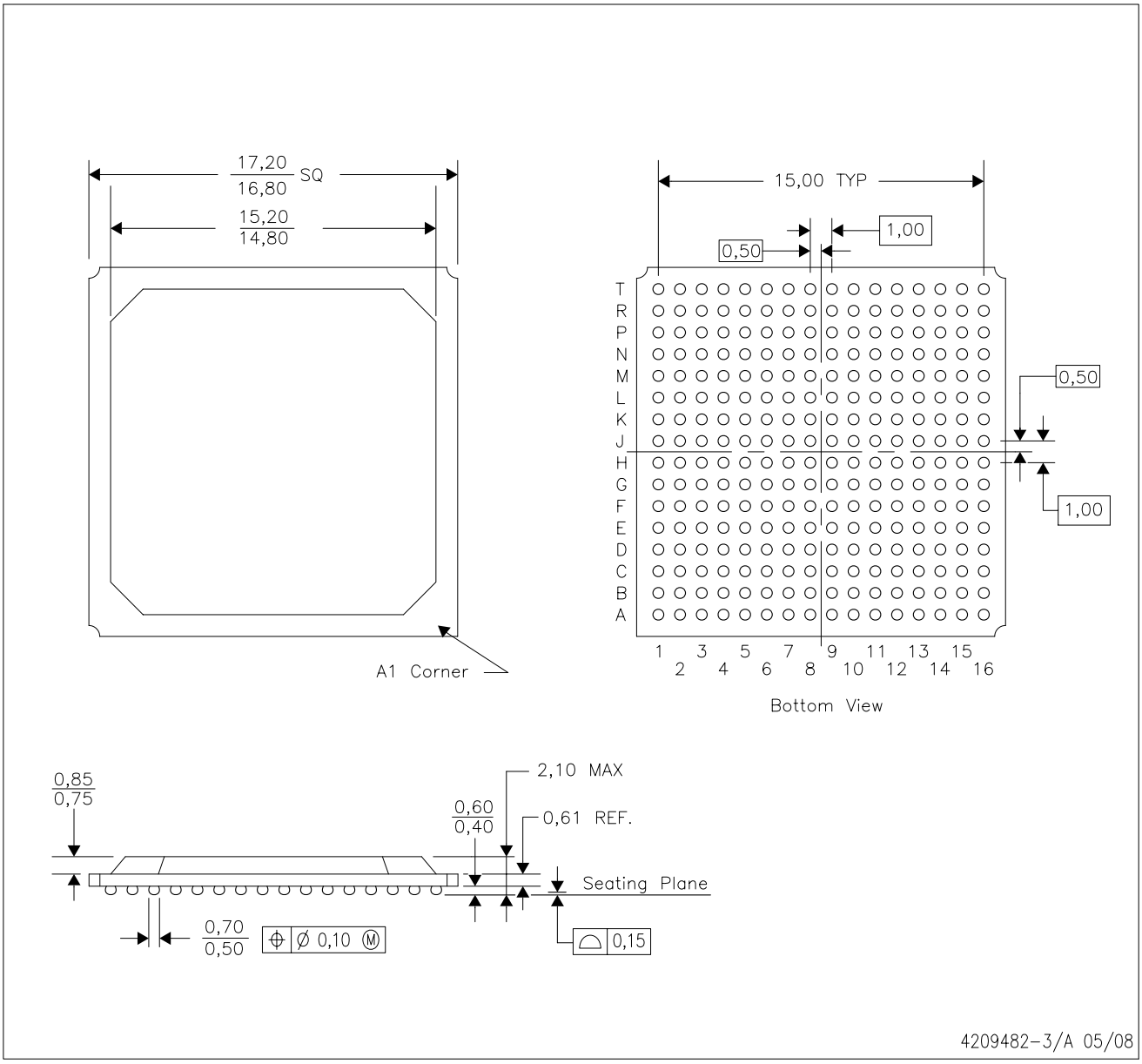

NOTES:
A. All linear dimensions are in millimeters.
B. This drawing is subject to change without notice.
C. Thermally enhanced plastic package.
D. This is a lead–free solder ball design.

PACKAGE OUTLINE

ZAY0179A

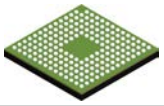

NFBGA - 1.4 mm max height

PLASTIC BALL GRID ARRAY

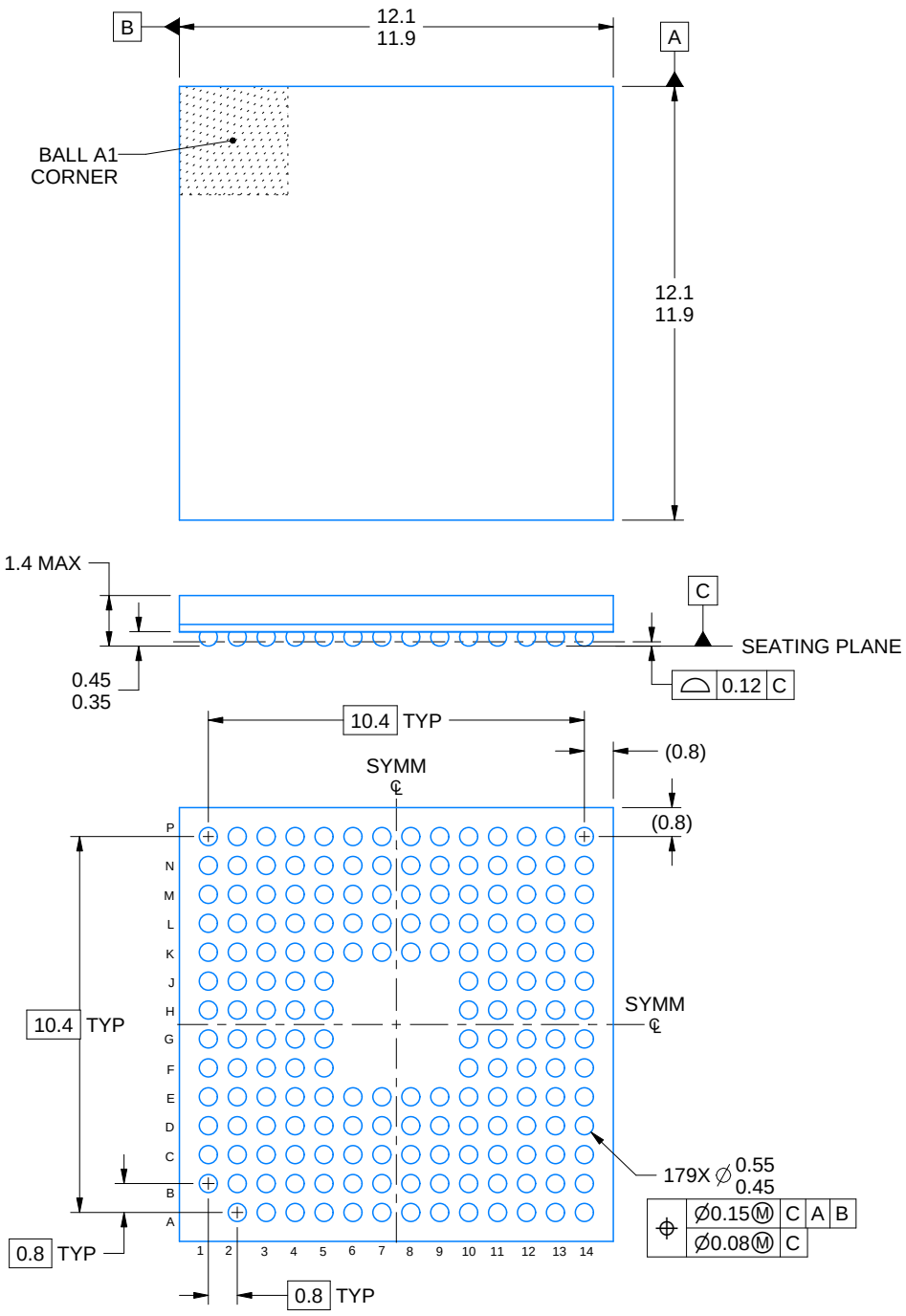

4225014/C 07/2020

NOTES:

1. All linear dimensions are in millimeters. Any dimensions in parenthesis are for reference only. Dimensioning and tolerancing per ASME Y14.5M.
2. This drawing is subject to change without notice.

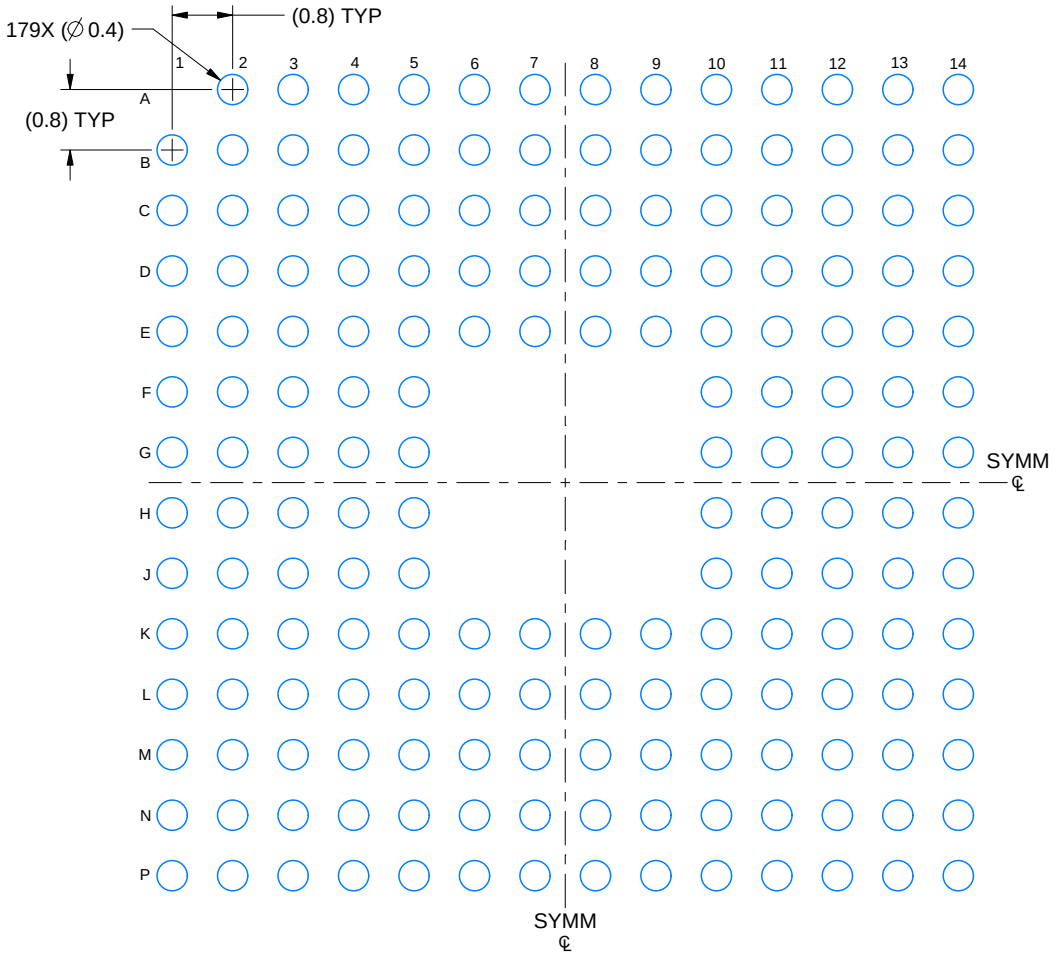

LAND PATTERN EXAMPLE
EXPOSED METAL SHOWN
SCALE: 10X

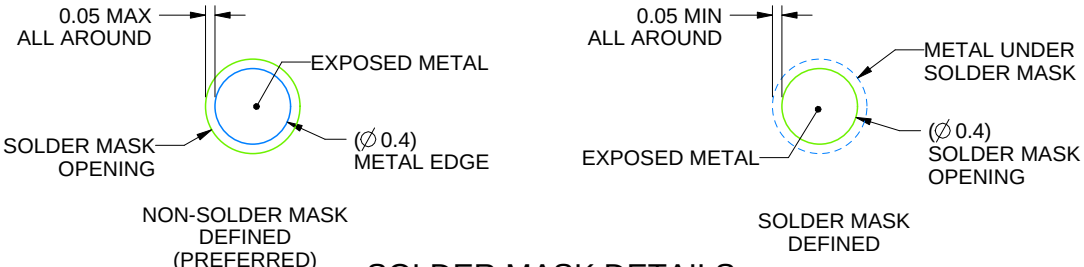

SOLDER MASK DETAILS
NOT TO SCALE

4225014/C 07/2020

NOTES: (continued)

3. Final dimensions may vary due to manufacturing tolerance considerations and also routing constraints.
For information, see Texas Instruments literature number SPRAA99 (www.ti.com/lit/spraa99).

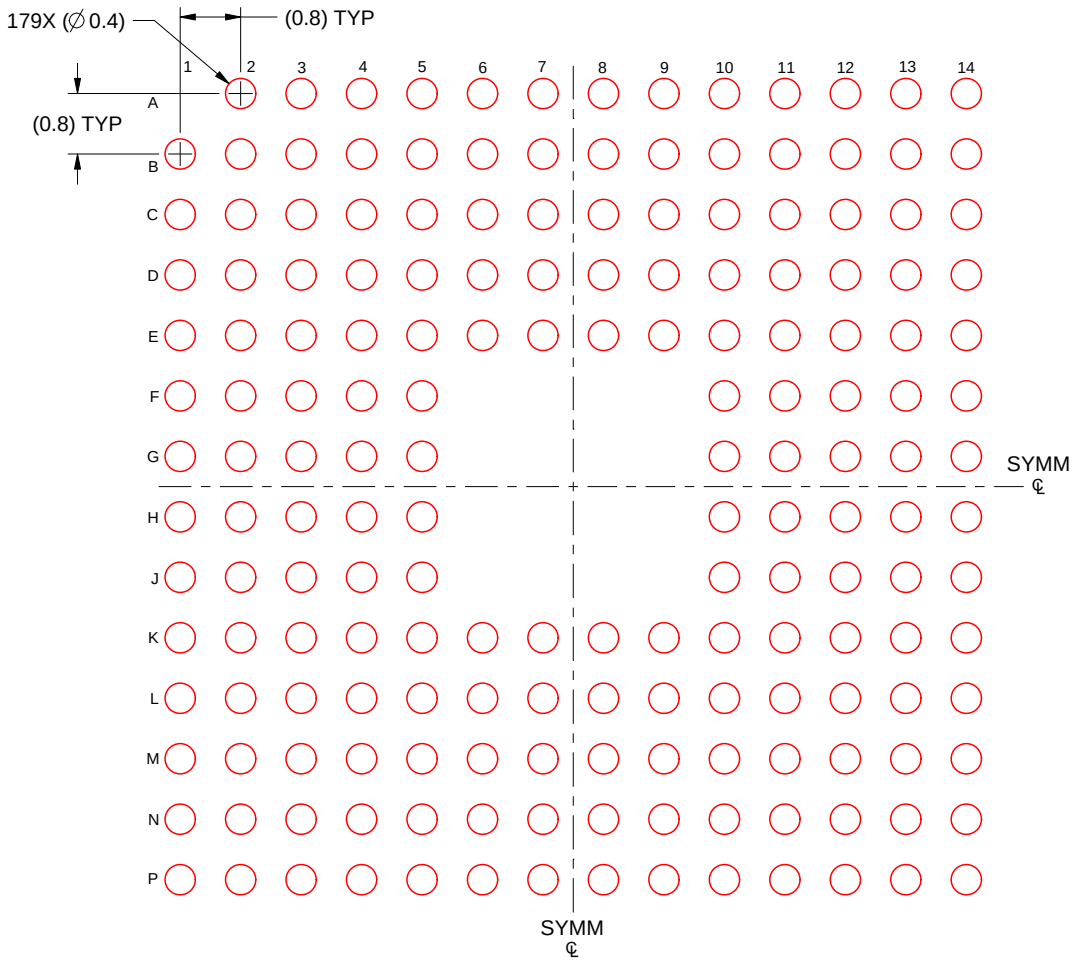

SOLDER PASTE EXAMPLE
BASED ON 0.150 mm THICK STENCIL
SCALE: 10X

4225014/C 07/2020

NOTES: (continued)

4. Laser cutting apertures with trapezoidal walls and rounded corners may offer better paste release.

IMPORTANT NOTICE AND DISCLAIMER

TI PROVIDES TECHNICAL AND RELIABILITY DATA (INCLUDING DATASHEETS), DESIGN RESOURCES (INCLUDING REFERENCE DESIGNS), APPLICATION OR OTHER DESIGN ADVICE, WEB TOOLS, SAFETY INFORMATION, AND OTHER RESOURCES “AS IS” AND WITH ALL FAULTS, AND DISCLAIMS ALL WARRANTIES, EXPRESS AND IMPLIED, INCLUDING WITHOUT LIMITATION ANY IMPLIED WARRANTIES OF MERCHANTABILITY, FITNESS FOR A PARTICULAR PURPOSE OR NON-INFRINGEMENT OF THIRD PARTY INTELLECTUAL PROPERTY RIGHTS.

These resources are intended for skilled developers designing with TI products. You are solely responsible for (1) selecting the appropriate TI products for your application, (2) designing, validating and testing your application, and (3) ensuring your application meets applicable standards, and any other safety, security, regulatory or other requirements.

These resources are subject to change without notice. TI grants you permission to use these resources only for development of an application that uses the TI products described in the resource. Other reproduction and display of these resources is prohibited. No license is granted to any other TI intellectual property right or to any third party intellectual property right. TI disclaims responsibility for, and you fully indemnify TI and its representatives against any claims, damages, costs, losses, and liabilities arising out of your use of these resources.

TI’s products are provided subject to TI’s Terms of Sale, TI’s General Quality Guidelines, or other applicable terms available either on ti.com or provided in conjunction with such TI products. TI’s provision of these resources does not expand or otherwise alter TI’s applicable warranties or warranty disclaimers for TI products. Unless TI explicitly designates a product as custom or customer-specified, TI products are standard, catalog, general purpose devices.

TI objects to and rejects any additional or different terms you may propose.

Copyright © 2025, Texas Instruments Incorporated

Last updated 10/2025

Looking for pricing, stock, or lifecycle information?

Click below to explore more details on WIN SOURCE:

- View TMX320C28343ZHH on WIN SOURCE
- Texas Instruments Information

Optimize Your Supply Chain with WIN SOURCE Solutions

- Global Sourcing Solution
- Obsolete Management
- Cost Control Management
- Shortage Management
- Alternative Solution
- Excess Inventory Management