WINSOURCE ELECTRONICS

THE DATASHEET OF

TMS320VC5509AGBBR

www.win-source.net 0086-755-83957316

TMS320VC5509A Fixed-Point Digital Signal Processor

Data Manual

Literature Number: SPRS205K
November 2002 − Revised January 2008

PRODUCTION DATA information is current as of publication date. Products conform to specifications per the terms of Texas Instruments standard warranty. Production processing does not necessarily include testing of all parameters.





REVISION HISTORY

This revision history highlights the technical changes made to SPRS205J to generate SPRS205K.

PAGE(S) NO.	ADDITIONS/CHANGES/DELETIONS
20	Table 2−3, Signal Descriptions (Continued): − Updated/changed D[15:0] **FUNCTION** description from "... The data bus keepers are ***disabled*** at reset, ..." to "... The data bus keepers are ***enabled*** at reset, ...".

Contents

Section *Page*

1 TMS320VC5509A Features 13

2 Introduction 14
2.1 Description 14
2.2 Pin Assignments 15
2.2.1 Terminal Assignments for the GHH and ZHH Packages 15
2.2.2 Pin Assignments for the PGE Package 17
2.3 Signal Descriptions 19

3 Functional Overview 31
3.1 Memory 32
3.1.1 On-Chip Dual-Access RAM (DARAM) 32
3.1.2 On-Chip Single-Access RAM (SARAM) 32
3.1.3 On-Chip Read-Only Memory (ROM) 33
3.1.4 Memory Map 33
3.1.5 Boot Configuration 36
3.2 Peripherals 37
3.3 Direct Memory Access (DMA) Controller 37
3.3.1 DMA Channel Control Register (DMA_CCR) 38
3.4 I^2C Interface 39
3.5 Configurable External Buses 39
3.5.1 External Bus Selection Register (EBSR) 40
3.5.2 Parallel Port 42
3.5.3 Parallel Port Signal Routing 43
3.5.4 Serial Ports 45
3.6 General-Purpose Input/Output (GPIO) Ports 46
3.6.1 Dedicated General-Purpose I/O 46
3.6.2 Address Bus General-Purpose I/O 47
3.6.3 EHPI General-Purpose I/O 49
3.7 System Register 51
3.8 USB Clock Generation 51
3.9 Memory-Mapped Registers 54
3.10 Peripheral Register Description 56
3.11 Interrupts 73
3.11.1 IFR and IER Registers 74
3.11.2 Interrupt Timing 76
3.11.3 Waking Up From IDLE Condition 76
3.11.4 Idling Clock Domain When External Parallel Bus Operating in EHPI Mode 76

4 Support 77
4.1 Notices Concerning JTAG (IEEE 1149.1) Boundary Scan Test Capability 77
4.1.1 Initialization Requirements for Boundary Scan Test 77
4.1.2 Boundary Scan Description Language (BSDL) Model 77

Section — Page

4.2 Documentation Support . . . 77
4.3 Device and Development-Support Tool Nomenclature . . . 78
4.4 TMS320VC5509A Device Nomenclature . . . 79

5 Electrical Specifications . . . 80
5.1 Absolute Maximum Ratings . . . 80
5.2 Recommended Operating Conditions . . . 81
5.2.1 Recommended Operating Conditions for CV_{DD} = 1.2 V (108 MHz) . . . 81
5.2.2 Recommended Operating Conditions for CV_{DD} = 1.35 V (144 MHz) . . . 82
5.2.3 Recommended Operating Conditions for CV_{DD} = 1.6 V (200 MHz) . . . 83
5.3 Electrical Characteristics . . . 84
5.3.1 Electrical Characteristics Over Recommended Operating Case Temperature Range for CV_{DD} = 1.2 V (108 MHz) . . . 84
5.3.2 Electrical Characteristics Over Recommended Operating Case Temperature Range for CV_{DD} = 1.35 V (144 MHz) . . . 85
5.3.3 Electrical Characteristics Over Recommended Operating Case Temperature Range for CV_{DD} = 1.6 V (200 MHz) . . . 86
5.4 ESD Performance . . . 87
5.5 Timing Parameter Symbology . . . 87
5.6 Clock Options . . . 88
5.6.1 Internal System Oscillator With External Crystal . . . 88
5.6.2 Layout Considerations . . . 89
5.6.3 Clock Generation in Bypass Mode (DPLL Disabled) . . . 90
5.6.4 Clock Generation in Lock Mode (DPLL Synthesis Enabled) . . . 91
5.6.5 Real-Time Clock Oscillator With External Crystal . . . 92
5.7 Memory Interface Timings . . . 93
5.7.1 Asynchronous Memory Timings . . . 93
5.7.2 Synchronous DRAM (SDRAM) Timings . . . 96
5.8 Reset Timings . . . 104
5.8.1 Power-Up Reset (On-Chip Oscillator Active) . . . 104
5.8.2 Power-Up Reset (On-Chip Oscillator Inactive) . . . 105
5.8.3 Warm Reset . . . 106
5.9 External Interrupt Timings . . . 107
5.10 Wake-Up From IDLE . . . 107
5.11 XF Timings . . . 108
5.12 General-Purpose Input/Output (GPIOx) Timings . . . 109
5.13 TIN/TOUT Timings (Timer0 Only) . . . 110
5.14 Multichannel Buffered Serial Port (McBSP) Timings . . . 111
5.14.1 McBSP0 Timings . . . 111
5.14.2 McBSP1 and McBSP2 Timings . . . 113
5.14.3 McBSP as SPI Master or Slave Timings . . . 116
5.14.4 McBSP General-Purpose I/O Timings . . . 124
5.15 Enhanced Host-Port Interface (EHPI) Timings . . . 125
5.16 I^2C Timings . . . 131
5.17 MultiMedia Card (MMC) Timings . . . 134
5.18 Secure Digital (SD) Card Timings . . . 135
5.19 Universal Serial Bus (USB) Timings . . . 136
5.20 ADC Timings . . . 138

Section Page

6 Mechanical Data 139
6.1 Package Thermal Resistance Characteristics 139
6.2 Packaging Information 139

List of Figures

Figure		Page
2−1	179-Terminal GHH and ZHH Ball Grid Array (Bottom View)	15
2−2	144-Pin PGE Low-Profile Quad Flatpack (Top View)	17
3−1	Block Diagram of the TMS320VC5509A	31
3−2	TMS320VC5509A Memory Map (PGE Package)	34
3−3	TMS320VC5509A Memory Map (GHH and ZHH Packages)	35
3−4	DMA_CCR Bit Locations	38
3−5	External Bus Selection Register	40
3−6	Parallel Port Signal Routing	43
3−7	Parallel Port (EMIF) Signal Interface	44
3−8	I/O Direction Register (IODIR) Bit Layout	46
3−9	I/O Data Register (IODATA) Bit Layout	47
3−10	Address/GPIO Enable Register (AGPIOEN) Bit Layout	47
3−11	Address/GPIO Direction Register (AGPIODIR) Bit Layout	48
3−12	Address/GPIO Data Register (AGPIODATA) Bit Layout	48
3−13	EHPI GPIO Enable Register (EHPIGPIOEN) Bit Layout	49
3−14	EHPI GPIO Direction Register (EHPIGPIODIR) Bit Layout	49
3−15	EHPI GPIO Data Register (EHPIGPIODATA) Bit Layout	50
3−16	System Register Bit Locations	51
3−17	USB Clock Generation	51
3−18	USB PLL Selection and Status Register Bit Layout	52
3−19	USB APLL Clock Mode Register Bit Layout	52
3−20	IFR0 and IER0 Bit Locations	74
3−21	IFR1 and IER1 Bit Locations	75
4−1	Device Nomenclature for the TMS320VC5509A	79
5−1	3.3-V Test Load Circuit	87
5−2	Internal System Oscillator With External Crystal	88
5−3	Bypass Mode Clock Timings	90
5−4	External Multiply-by-N Clock Timings	92
5−5	Real-Time Clock Oscillator With External Crystal	92
5−6	Asynchronous Memory Read Timings	94
5−7	Asynchronous Memory Write Timings	95
5−8	Three SDRAM Read Commands	97
5−9	Three SDRAM WRT Commands	98
5−10	SDRAM ACTV Command	99
5−11	SDRAM DCAB Command	100
5−12	SDRAM REFR Command	101

Figure *Page*

5−13 SDRAM MRS Command 102
5−14 SDRAM Self-Refresh Command 103
5−15 Power-Up Reset (On-Chip Oscillator Active) Timings 104
5−16 Power-Up Reset (On-Chip Oscillator Inactive) Timings 105
5−17 Reset Timings 106
5−18 External Interrupt Timings 107
5−19 Wake-Up From IDLE Timings 107
5−20 XF Timings 108
5−21 General-Purpose Input/Output (IOx) Signal Timings 109
5−22 TIN/TOUT Timings When Configured as Inputs 110
5−23 TIN/TOUT Timings When Configured as Outputs 110
5−24 McBSP Receive Timings 115
5−25 McBSP Transmit Timings 115
5−26 McBSP Timings as SPI Master or Slave: CLKSTP = 10b, CLKXP = 0 117
5−27 McBSP Timings as SPI Master or Slave: CLKSTP = 11b, CLKXP = 0 119
5−28 McBSP Timings as SPI Master or Slave: CLKSTP = 10b, CLKXP = 1 121
5−29 McBSP Timings as SPI Master or Slave: CLKSTP = 11b, CLKXP = 1 123
5−30 McBSP General-Purpose I/O Timings 124
5−31 $\overline{\text{HINT}}$ Timings 126
5−32 EHPI Nonmultiplexed Read/Write Timings 126
5−33 EHPI Multiplexed Memory (HPID) Read/Write Timings Without Autoincrement 127
5−34 EHPI Multiplexed Memory (HPID) Read Timings With Autoincrement 128
5−35 EHPI Multiplexed Memory (HPID) Write Timings With Autoincrement 129
5−36 EHPI Multiplexed Register Read/Write Timings 130
5−37 I^2C Receive Timings 132
5−38 I^2C Transmit Timings 133
5−39 MultiMedia Card (MMC) Timings 134
5−40 Secure Digital (SD) Timings 135
5−41 USB Timings 136
5−42 Full-Speed Loads 137

List of Tables

Table		Page
2−1	Pin Assignments for the GHH and ZHH Packages	16
2−2	Pin Assignments for the PGE Package	18
2−3	Signal Descriptions	19
3−1	DARAM Blocks	32
3−2	SARAM Blocks	32
3−3	Boot Configuration Summary	36
3−4	Synchronization Control Function	38
3−5	External Bus Selection Register Bit Field Description	40
3−6	TMS320VC5509A Parallel Port Signal Routing	42
3−7	TMS320VC5509A Serial Port1 Signal Routing	45
3−8	TMS320VC5509A Serial Port2 Signal Routing	45
3−9	I/O Direction Register (IODIR) Bit Functions	46
3−10	I/O Data Register (IODATA) Bit Functions	47
3−11	Address/GPIO Enable Register (AGPIOEN) Bit Functions	47
3−12	Address/GPIO Direction Register (AGPIODIR) Bit Functions	48
3−13	Address/GPIO Data Register (AGPIODATA) Bit Functions	48
3−14	EHPI GPIO Enable Register (EHPIGPIOEN) Bit Functions	49
3−15	EHPI GPIO Direction Register (EHPIGPIODIR) Bit Functions	49
3−16	EHPI GPIO Data Register (EHPIGPIODATA) Bit Functions	50
3−17	System Register Bit Fields	51
3−18	USB PLL Selection and Status Register Bit Functions	52
3−19	USB APLL Clock Mode Register Bit Functions	52
3−20	M and D Values Based on MODE, DIV, and K	53
3−21	CPU Memory-Mapped Registers	54
3−22	Idle Control, Status, and System Registers	56
3−23	External Memory Interface Registers	56
3−24	DMA Configuration Registers	57
3−25	Real-Time Clock Registers	63
3−26	Clock Generator	63
3−27	Timers	63
3−28	Multichannel Serial Port #0	64
3−29	Multichannel Serial Port #1	65
3−30	Multichannel Serial Port #2	66
3−31	GPIO	67
3−32	Device Revision ID	67
3−33	I^2C Module Registers	67
3−34	Watchdog Timer Registers	68
3−35	MMC/SD1 Module Registers	68
3−36	MMC/SD2 Module Registers	69
3−37	USB Module Registers	70
3−38	Analog-to-Digital Controller (ADC) Registers	72
3−39	External Bus Selection Register	72
3−40	Interrupt Table	73
3−41	IFR0 and IER0 Register Bit Fields	74
3−42	IFR1 and IER1 Register Bit Fields	75

Table Page

5−1 Recommended Crystal Parameters 88
5−2 CLKIN Timing Requirements 90
5−3 CLKOUT Switching Characteristics 90
5−4 Multiply-By-N Clock Option Timing Requirements 91
5−5 Multiply-By-N Clock Option Switching Characteristics 91
5−6 Recommended RTC Crystal Parameters 92
5−7 Asynchronous Memory Cycle Timing Requirements 93
5−8 Asynchronous Memory Cycle Switching Characteristics 93
5−9 Synchronous DRAM Cycle Timing Requirements 96
5−10 Synchronous DRAM Cycle Switching Characteristics 96
5−11 Power-Up Reset (On-Chip Oscillator Active) Timing Requirements 104
5−12 Power-Up Reset (On-Chip Oscillator Inactive) Timing Requirements 105
5−13 Power-Up Reset (On-Chip Oscillator Inactive) Switching Characteristics 105
5−14 Reset Timing Requirements 106
5−15 Reset Switching Characteristics 106
5−16 External Interrupt Timing Requirements 107
5−17 Wake-Up From IDLE Switching Characteristics 107
5−18 XF Switching Characteristics 108
5−19 GPIO Pins Configured as Inputs Timing Requirements 109
5−20 GPIO Pins Configured as Outputs Switching Characteristics 109
5−21 TIN/TOUT Pins Configured as Inputs Timing Requirements 110
5−22 TIN/TOUT Pins Configured as Outputs Switching Characteristics 110
5−23 McBSP0 Timing Requirements 111
5−24 McBSP0 Switching Characteristics 112
5−25 McBSP1 and McBSP2 Timing Requirements 113
5−26 McBSP1 and McBSP2 Switching Characteristics 114
5−27 McBSP as SPI Master or Slave Timing Requirements (CLKSTP = 10b, CLKXP = 0) 116
5−28 McBSP as SPI Master or Slave Switching Characteristics (CLKSTP = 10b, CLKXP = 0) 116
5−29 McBSP as SPI Master or Slave Timing Requirements (CLKSTP = 11b, CLKXP = 0) 118
5−30 McBSP as SPI Master or Slave Switching Characteristics (CLKSTP = 11b, CLKXP = 0) 118
5−31 McBSP as SPI Master or Slave Timing Requirements (CLKSTP = 10b, CLKXP = 1) 120
5−32 McBSP as SPI Master or Slave Switching Characteristics (CLKSTP = 10b, CLKXP = 1) 120
5−33 McBSP as SPI Master or Slave Timing Requirements (CLKSTP = 11b, CLKXP = 1) 122
5−34 McBSP as SPI Master or Slave Switching Characteristics (CLKSTP = 11b, CLKXP = 1) 122
5−35 McBSP General-Purpose I/O Timing Requirements 124
5−36 McBSP General-Purpose I/O Switching Characteristics 124
5−37 EHPI Timing Requirements 125
5−38 EHPI Switching Characteristics 125
5−39 I^2C Signals (SDA and SCL) Timing Requirements 131
5−40 I^2C Signals (SDA and SCL) Switching Characteristics 133
5−41 MultiMedia Card (MMC) Timing Requirements 134
5−42 MultiMedia Card (MMC) Switching Characteristics 134
5−43 Secure Digital (SD) Card Timing Requirements 135
5−44 Secure Digital (SD) Card Switching Characteristics 135
5−45 Universal Serial Bus (USB) Characteristics 136
5−46 ADC Characteristics 138

Table		Page
6−1	Thermal Resistance Characteristics (Ambient)	139
6−2	Thermal Resistance Characteristics (Case)	139

1 TMS320VC5509A Features

- High-Performance, Low-Power, Fixed-Point TMS320C55x™ Digital Signal Processor
  - 9.26-, 6.95-, 5-ns Instruction Cycle Time
  - 108-, 144-, 200-MHz Clock Rate
  - One/Two Instruction(s) Executed per Cycle
  - Dual Multipliers [Up to 400 Million Multiply-Accumulates per Second (MMACS)]
  - Two Arithmetic/Logic Units (ALUs)
  - Three Internal Data/Operand Read Buses and Two Internal Data/Operand Write Buses
- 128K x 16-Bit On-Chip RAM, Composed of:
  - 64K Bytes of Dual-Access RAM (DARAM) 8 Blocks of 4K × 16-Bit
  - 192K Bytes of Single-Access RAM (SARAM) 24 Blocks of 4K × 16-Bit
- 64K Bytes of One-Wait-State On-Chip ROM (32K × 16-Bit)
- 8M × 16-Bit Maximum Addressable External Memory Space (Synchronous DRAM)
- 16-Bit External Parallel Bus Memory Supporting Either:
  - External Memory Interface (EMIF) With GPIO Capabilities and Glueless Interface to:
    - Asynchronous Static RAM (SRAM)
    - Asynchronous EPROM
    - Synchronous DRAM (SDRAM)
  - 16-Bit Parallel Enhanced Host-Port Interface (EHPI) With GPIO Capabilities
- Programmable Low-Power Control of Six Device Functional Domains
- On-Chip Scan-Based Emulation Logic
- On-Chip Peripherals
  - Two 20-Bit Timers
  - Watchdog Timer
  - Six-Channel Direct Memory Access (DMA) Controller
  - Three Serial Ports Supporting a Combination of:
    - Up to 3 Multichannel Buffered Serial Ports (McBSPs)
    - Up to 2 MultiMedia/Secure Digital Card Interfaces
  - Programmable Phase-Locked Loop Clock Generator
  - Seven (LQFP) or Eight (BGA) General-Purpose I/O (GPIO) Pins and a General-Purpose Output Pin (XF)
  - USB Full-Speed (12 Mbps) Slave Port Supporting Bulk, Interrupt and Isochronous Transfers
  - Inter-Integrated Circuit (I^2C) Multi-Master and Slave Interface
  - Real-Time Clock (RTC) With Crystal Input, Separate Clock Domain, Separate Power Supply
  - 4-Channel (BGA) or 2-Channel (LQFP) 10-Bit Successive Approximation A/D
- IEEE Std 1149.1† (JTAG) Boundary Scan Logic
- Packages:
  - 144-Terminal Low-Profile Quad Flatpack (LQFP) (PGE Suffix)
  - 179-Terminal MicroStar BGA™ (Ball Grid Array) (GHH Suffix)
  - 179-Terminal Lead-Free MicroStar BGA™ (Ball Grid Array) (ZHH Suffix)
- 1.2-V Core (108 MHz), 2.7-V – 3.6-V I/Os
- 1.35-V Core (144 MHz), 2.7-V – 3.6-V I/Os
- 1.6-V Core (200 MHz), 2.7-V – 3.6-V I/Os

TMS320C55x and MicroStar BGA are trademarks of Texas Instruments.
All trademarks are the property of their respective owners.
† IEEE Standard 1149.1-1990 Standard-Test-Access Port and Boundary Scan Architecture.

2 Introduction

This section describes the main features of the TMS320VC5509A, lists the pin assignments, and describes the function of each pin. This data manual also provides a detailed description section, electrical specifications, parameter measurement information, and mechanical data about the available packaging.

NOTE: This data manual is designed to be used in conjunction with the*TMS320C55x™ DSP Functional Overview* (literature number SPRU312), the *TMS320C55x DSP CPU Reference Guide* (literature number SPRU371), and the *TMS320C55x DSP Peripherals Overview Reference Guide* (literature number SPRU317).

2.1 Description

The TMS320VC5509A fixed-point digital signal processor (DSP) is based on the TMS320C55x DSP generation CPU processor core. The C55x™ DSP architecture achieves high performance and low power through increased parallelism and total focus on reduction in power dissipation. The CPU supports an internal bus structure that is composed of one program bus, three data read buses, two data write buses, and additional buses dedicated to peripheral and DMA activity. These buses provide the ability to perform up to three data reads and two data writes in a single cycle. In parallel, the DMA controller can perform up to two data transfers per cycle independent of the CPU activity.

The C55x CPU provides two multiply-accumulate (MAC) units, each capable of 17-bit x 17-bit multiplication in a single cycle. A central 40-bit arithmetic/logic unit (ALU) is supported by an additional 16-bit ALU. Use of the ALUs is under instruction set control, providing the ability to optimize parallel activity and power consumption. These resources are managed in the Address Unit (AU) and Data Unit (DU) of the C55x CPU.

The C55x DSP generation supports a variable byte width instruction set for improved code density. The Instruction Unit (IU) performs 32-bit program fetches from internal or external memory and queues instructions for the Program Unit (PU). The Program Unit decodes the instructions, directs tasks to AU and DU resources, and manages the fully protected pipeline. Predictive branching capability avoids pipeline flushes on execution of conditional instructions.

The general-purpose input and output functions and the10-bit A/D provide sufficient pins for status, interrupts, and bit I/O for LCDs, keyboards, and media interfaces. The parallel interface operates in two modes, either as a slave to a microcontroller using the HPI port or as a parallel media interface using the asynchronous EMIF. Serial media is supported through two MultiMedia Card/Secure Digital (MMC/SD) peripherals and three McBSPs.

The 5509A peripheral set includes an external memory interface (EMIF) that provides glueless access to asynchronous memories like EPROM and SRAM, as well as to high-speed, high-density memories such as synchronous DRAM. Additional peripherals include Universal Serial Bus (USB), real-time clock, watchdog timer, I^2C multi-master and slave interface. Three full-duplex multichannel buffered serial ports (McBSPs) provide glueless interface to a variety of industry-standard serial devices, and multichannel communication with up to 128 separately enabled channels. The enhanced host-port interface (HPI) is a 16-bit parallel interface used to provide host processor access to 32K bytes of internal memory on the 5509A. The HPI can be configured in either multiplexed or non-multiplexed mode to provide glueless interface to a wide variety of host processors. The DMA controller provides data movement for six independent channel contexts without CPU intervention, providing DMA throughput of up to two 16-bit words per cycle. Two general-purpose timers, up to eight dedicated general-purpose I/O (GPIO) pins, and digital phase-locked loop (DPLL) clock generation are also included.

The 5509A is supported by the industry's award-winning eXpressDSP™, Code Composer Studio™ Integrated Development Environment (IDE), DSP/BIOS™, Texas Instruments' algorithm standard, and the industry's largest third-party network. The Code Composer Studio IDE features code generation tools including a C Compiler and Visual Linker, simulator, RTDX™, XDS510™ emulation device drivers, and evaluation modules. The 5509A is also supported by the C55x DSP Library which features more than 50 foundational software kernels (FIR filters, IIR filters, FFTs, and various math functions) as well as chip and board support libraries.

C55x, eXpressDSP, Code Composer Studio, DSP/BIOS, RTDX, and XDS510 are trademarks of Texas Instruments.

The TMS320C55x DSP core was created with an open architecture that allows the addition of application-specific hardware to boost performance on specific algorithms. The hardware extensions on the 5509A strike the perfect balance of fixed function performance with programmable flexibility, while achieving low-power consumption, and cost that traditionally has been difficult to find in the video-processor market. The extensions allow the 5509A to deliver exceptional video codec performance with more than half its bandwidth available for performing additional functions such as color space conversion, user-interface operations, security, TCP/IP, voice recognition, and text-to-speech conversion. As a result, a single 5509A DSP can power most portable digital video applications with processing headroom to spare. For more information, see the *TMS320C55x Hardware Extensions for Image/Video Applications Programmer's Reference* (literature number SPRU098). For more information on using the the DSP Image Processing Library, see the *TMS320C55x Image/Video Processing Library Programmer's Reference* (literature number SPRU037).

2.2 Pin Assignments

Figure 2−1 illustrates the ball locations for the 179-pin ball grid array (BGA) package and is used in conjunction with Table 2−1 to locate signal names and ball grid numbers.

DV_{DD} is the power supply for the I/O pins while CV_{DD} is the power supply for the core. V_{SS} is the ground for both the I/O pins and the core. RCV_{DD} and RDV_{DD} are RTC module core and I/O supply, respectively. $USBV_{DD}$ is the USB module I/O (DP, DN, and PU) supply. ADV_{DD} is the power supply for the digital portion of the ADC. AV_{DD} is the power supply for the analog part of the ADC. ADV_{SS} is the ground pin for the digital portion of the ADC. AV_{SS} is the ground pin for the analog part of the ADC. $USBPLLV_{DD}$ and $USBPLLV_{SS}$ are the dedicated supply and ground pins for the USB PLL, respectively.

2.2.1 Terminal Assignments for the GHH and ZHH Packages

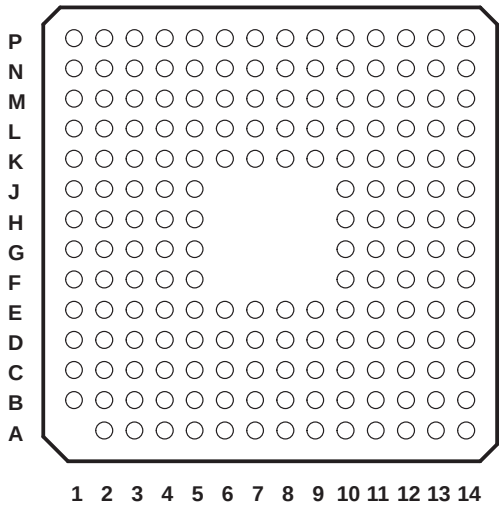

Figure 2−1. 179-Terminal GHH and ZHH Ball Grid Array (Bottom View)

Table 2−1. Pin Assignments for the GHH and ZHH Packages

BALL #	SIGNAL NAME	BALL #	SIGNAL NAME	BALL #	SIGNAL NAME	BALL #	SIGNAL NAME
A2	V_{SS}	D5	GPIO5	H2	DV_{DD}	L13	D15
A3	GPIO4	D6	DR0	H3	A19	L14	CV_{DD}
A4	DV_{DD}	D7	S10	H4	C4	M1	C10
A5	FSR0	D8	S11	H5	C5	M2	C13
A6	CV_{DD}	D9	DV_{DD}	H10	DV_{DD}	M3	V_{SS}
A7	S12	D10	S25	H11	A'[0]	M4	CV_{DD}
A8	DV_{DD}	D11	V_{SS}	H12	$\overline{\text{RESET}}$	M5	V_{SS}
A9	S20	D12	AIN2	H13	SDA	M6	A5
A10	S21	D13	AIN1	H14	SCL	M7	A1
A11	S23	D14	AIN0	J1	C6	M8	A15
A12	RTCINX1	E1	GPIO1	J2	DV_{DD}	M9	D3
A13	RDV_{DD}	E2	GPIO2	J3	C7	M10	D6
A14	RDV_{DD}	E3	DV_{DD}	J4	C8	M11	CV_{DD}
B1	V_{SS}	E4	V_{SS}	J5	CV_{DD}	M12	DV_{DD}
B2	CV_{DD}	E5	V_{SS}	J10	CV_{DD}	M13	V_{SS}
B3	GPIO3	E6	DV_{DD}	J11	CV_{DD}	M14	D12
B4	TIN/TOUT0	E7	DX0	J12	$\overline{\text{TRST}}$	N1	V_{SS}
B5	CLKR0	E8	S15	J13	TCK	N2	V_{SS}
B6	FSX0	E9	S13	J14	TMS	N3	A13
B7	CV_{DD}	E10	NC	K1	A18	N4	A10
B8	CV_{DD}	E11	AIN3	K2	C9	N5	A7
B9	V_{SS}	E12	ADV_{SS}	K3	C11	N6	DV_{DD}
B10	S24	E13	V_{SS}	K4	V_{SS}	N7	CV_{DD}
B11	V_{SS}	E14	XF	K5	V_{SS}	N8	CV_{DD}
B12	RTCINX2	F1	X1	K6	A3	N9	V_{SS}
B13	RDV_{DD}	F2	X2/CLKIN	K7	A2	N10	V_{SS}
B14	AV_{SS}	F3	GPIO0	K8	D1	N11	D8
C1	PU	F4	V_{SS}	K9	A14	N12	D11
C2	V_{SS}	F5	CLKOUT	K10	DV_{DD}	N13	DV_{DD}
C3	NC	F10	ADV_{DD}	K11	EMU0	N14	V_{SS}
C4	GPIO6	F11	V_{SS}	K12	EMU1/$\overline{\text{OFF}}$	P1	V_{SS}
C5	V_{SS}	F12	$\overline{\text{INT4}}$	K13	TDO	P2	V_{SS}
C6	CLKX0	F13	DV_{DD}	K14	TDI	P3	A12
C7	V_{SS}	F14	$\overline{\text{INT3}}$	L1	CV_{DD}	P4	A9
C8	S14	G1	CV_{DD}	L2	C14	P5	A17
C9	S22	G2	C1	L3	C12	P6	A4
C10	CV_{DD}	G3	A20	L4	A11	P7	A16
C11	V_{SS}	G4	C2	L5	A8	P8	DV_{DD}
C12	RCV_{DD}	G5	C0	L6	A6	P9	D2
C13	AV_{SS}	G10	$\overline{\text{INT2}}$	L7	A0	P10	D5
C14	AV_{DD}	G11	$USBPLLV_{DD}$	L8	D0	P11	D7
D1	GPIO7	G12	$USBPLLV_{SS}$	L9	D4	P12	D10
D2	$USBV_{DD}$	G13	$\overline{\text{INT1}}$	L10	D9	P13	DV_{DD}
D3	DN	G14	$\overline{\text{INT0}}$	L11	D13	P14	DV_{DD}
D4	DP	H1	C3	L12	D14		

2.2.2 Pin Assignments for the PGE Package

The TMS320VC5509APGE 144-pin low-profile quad flatpack (LQFP) pin assignments are shown in Figure 2−2 and is used in conjunction with Table 2−2 to locate signal names and pin numbers.

DV_{DD} is the power supply for the I/O pins while CV_{DD} is the power supply for the core. V_{SS} is the ground for both the I/O pins and the core. RCV_{DD} and RDV_{DD} are RTC module core and I/O supply, respectively. $USBV_{DD}$ is the USB module I/O (DP, DN, and PU) supply. ADV_{DD} is the power supply for the digital portion of the ADC. AV_{DD} is the power supply for the analog part of the ADC. ADV_{SS} is the ground pin for the digital portion of the ADC. AV_{SS} is the ground pin for the analog part of the ADC. $USBPLLV_{DD}$ and $USBPLLV_{SS}$ are the dedicated supply and ground pins for the USB PLL, respectively.

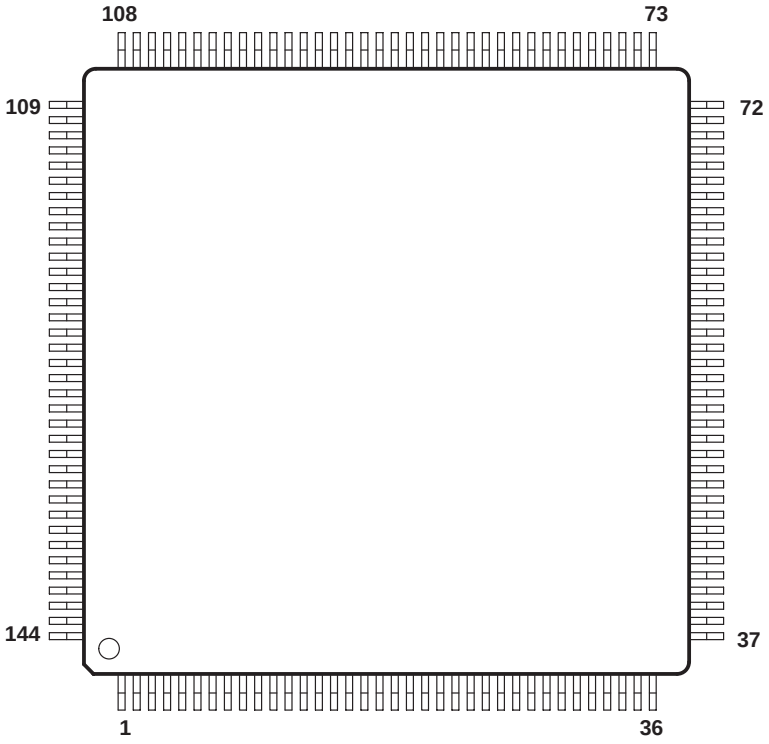

Figure 2−2. 144-Pin PGE Low-Profile Quad Flatpack (Top View)

Table 2−2. Pin Assignments for the PGE Package

PIN NO.	SIGNAL NAME	PIN NO.	SIGNAL NAME	PIN NO.	SIGNAL NAME	PIN NO.	SIGNAL NAME
1	V_{SS}	37	V_{SS}	73	V_{SS}	109	RDV_{DD}
2	PU	38	A13	74	D12	110	RCV_{DD}
3	DP	39	A12	75	D13	111	RTCINX2
4	DN	40	A11	76	D14	112	RTCINX1
5	$USBV_{DD}$	41	CV_{DD}	77	D15	113	V_{SS}
6	GPIO7	42	A10	78	CV_{DD}	114	V_{SS}
7	V_{SS}	43	A9	79	EMU0	115	V_{SS}
8	DV_{DD}	44	A8	80	EMU1/$\overline{OFF}$	116	S23
9	GPIO2	45	V_{SS}	81	TDO	117	S25
10	GPIO1	46	A7	82	TDI	118	CV_{DD}
11	V_{SS}	47	A6	83	CV_{DD}	119	S24
12	GPIO0	48	A5	84	$\overline{TRST}$	120	S21
13	X2/CLKIN	49	DV_{DD}	85	TCK	121	S22
14	X1	50	A4	86	TMS	122	V_{SS}
15	CLKOUT	51	A3	87	CV_{DD}	123	S20
16	C0	52	A2	88	DV_{DD}	124	S13
17	C1	53	CV_{DD}	89	SDA	125	S15
18	CV_{DD}	54	A1	90	SCL	126	DV_{DD}
19	C2	55	A0	91	$\overline{RESET}$	127	S14
20	C3	56	DV_{DD}	92	$USBPLLV_{SS}$	128	S11
21	C4	57	D0	93	$\overline{INT0}$	129	S12
22	C5	58	D1	94	$\overline{INT1}$	130	S10
23	C6	59	D2	95	$USBPLLV_{DD}$	131	DX0
24	DV_{DD}	60	V_{SS}	96	$\overline{INT2}$	132	CV_{DD}
25	C7	61	D3	97	$\overline{INT3}$	133	FSX0
26	C8	62	D4	98	DV_{DD}	134	CLKX0
27	C9	63	D5	99	$\overline{INT4}$	135	DR0
28	C11	64	V_{SS}	100	V_{SS}	136	FSR0
29	CV_{DD}	65	D6	101	XF	137	CLKR0
30	CV_{DD}	66	D7	102	V_{SS}	138	V_{SS}
31	C14	67	D8	103	ADV_{SS}	139	DV_{DD}
32	C12	68	CV_{DD}	104	ADV_{DD}	140	TIN/TOUT0
33	V_{SS}	69	D9	105	AIN0	141	GPIO6
34	C10	70	D10	106	AIN1	142	GPIO4
35	C13	71	D11	107	AV_{DD}	143	GPIO3
36	V_{SS}	72	DV_{DD}	108	AV_{SS}	144	V_{SS}

2.3 Signal Descriptions

Table 2−3 lists each signal, function, and operating mode(s) grouped by function. See Section 2.2 for pin locations based on package type.

Table 2−3. Signal Descriptions

TERMINAL NAME	MULTIPLEXED SIGNAL NAME	I/O/Z†	FUNCTION	BK‡	RESET CONDITION
PARALLEL BUS					
A[13:0]		I/O/Z	A subset of the parallel address bus A13−A0 of the C55x™ DSP core bonded to external pins. These pins serve in one of three functions: HPI address bus (HPI.HA[13:0]), EMIF address bus (EMIF.A[13:0]), or general-purpose I/O (GPIO.A[13:0]). The initial state of these pins depends on the GPIO0 pin. See Section 3.5.1 for more information. The address bus has a bus holder feature that eliminates passive component requirement and the power dissipation associated with them. The bus holders keep the address bus at the previous logic level when the bus goes into a high-impedance state.	BK	GPIO0 = 1: Output, EMIF.A[13:0] GPIO0 = 0: Input, HPI.HA[13:0]
	HPI.HA[13:0]	I	HPI address bus. HPI.HA[13:0] is selected when the Parallel Port Mode bit field of the External Bus Selection Register is 10. This setting enables the HPI in non-multiplexed mode. HPI.HA[13:0] provides DSP internal memory access to host. In non-multiplexed mode, these signals are driven by an external host as address lines.		
	EMIF.A[13:0]	O/Z	EMIF address bus. EMIF.A[13:0] is selected when the Parallel Port Mode bit field of the External Bus Selection Register is 01. This setting enables the full EMIF mode and the EMIF drives the parallel port address bus. The internal A[14] address is exclusive-ORed with internal A[0] address and the result is routed to the A[0] pin.		
	GPIO.A[13:0]	I/O/Z	General-purpose I/O address bus. GPIO.A[13:0] is selected when the Parallel Port Mode bit field of the External Bus Selection Register is 11. This setting enables the HPI in multiplexed mode with the Parallel Port GPIO register controlling the parallel port address bus. GPIO is also selected when the Parallel Port Mode bit field is 00, enabling the Data EMIF mode.		
A′[0] (BGA only)	EMIF.A′[0]	O/Z	EMIF address bus A′[0]. This pin is not multiplexed with EMIF.A[14] and is used as the least significant external address pin on the BGA package.		Output

† I = Input, O = Output, S = Supply, Hi-Z = High-impedance

‡ BK = bus keeper (the bus keeper maintains the previous voltage level during reset or while the output pin is not driven), PU = pullup, PD = pulldown, H = hysteresis input buffer, FS = fail-safe buffer

Table 2−3. Signal Descriptions (Continued)

TERMINAL NAME	MULTIPLEXED SIGNAL NAME	I/O/Z†	FUNCTION	BK‡	RESET CONDITION
PARALLEL BUS (CONTINUED)					
A[15:14] (BGA only)		I/O/Z	A subset of the parallel address bus A15−A14 of the C55x™ DSP core bonded to external pins. These pins serve in one of two functions: EMIF address bus (EMIF.A[15:14]), or general-purpose I/O (GPIO.A[15:14]). The initial state of these pins depends on the GPIO0 pin. See Section 3.5.1 for more information. The address bus has a bus holder feature that eliminates passive component requirement and the power dissipation associated with them. The bus holders keep the address bus at the previous logic level when the bus goes into a high-impedance state.	BK	GPIO0 = 1: Output, EMIF.A[15:14] GPIO0 = 0: Input, GPIO.A[15:14]
	EMIF.A[15:14]	O/Z	EMIF address bus. EMIF.A[15:14] is selected when the Parallel Port Mode bit field of the External Bus Selection Register is 01. This setting enables the full EMIF mode and the EMIF drives the parallel port address bus.		
	GPIO.A[15:14]	I/O/Z	General-purpose I/O address bus. GPIO.A[15:14] is selected when the Parallel Port Mode bit field of the External Bus Selection Register is 11. This setting enables the HPI in multiplexed mode with the Parallel Port GPIO register controlling the parallel port address bus. GPIO is also selected when the Parallel Port Mode bit field is 00, enabling the Data EMIF mode.		
A[20:16] (BGA only)	EMIF.A[20:16]	O/Z	EMIF address bus. At reset, these address pins are set as output. NOTE: These pins only function as EMIF address pins and they are not multiplexed for any other function.		Output
D[15:0]		I/O/Z	A subset of the parallel bidirectional data bus D31−D0 of the C55x™ DSP core. These pins serve in one of two functions: EMIF data bus (EMIF.D[15:0]) or HPI data bus (HPI.HD[15:0]). The initial state of these pins depends on the GPIO0 pin. See Section 3.5.1 for more information. The data bus includes bus keepers to reduce the static power dissipation caused by floating, unused pins. This eliminates the need for external bias resistors on unused pins. When the data bus is not being driven by the CPU, the bus keepers keep the pins at the logic level that was most recently driven. (The data bus keepers are enabled at reset, and can be enabled/disabled under software control.)	BK	GPIO0 = 1: Input, EMIF.D[15:0] GPIO0 = 0: Input, HPI.HD[15:0]
	EMIF.D[15:0]	I/O/Z	EMIF data bus. EMIF.D[15:0] is selected when the Parallel Port Mode bit field of the External Bus Selection Register is 00 or 01.		
	HPI.HD[15:0]	I/O/Z	HPI data bus. HPI.HD[15:0] is selected when the Parallel Port Mode bit field of the External Bus Selection Register is 10 or 11.		

† I = Input, O = Output, S = Supply, Hi-Z = High-impedance

‡ BK = bus keeper (the bus keeper maintains the previous voltage level during reset or while the output pin is not driven), PU = pullup, PD = pulldown, H = hysteresis input buffer, FS = fail-safe buffer

Table 2−3. Signal Descriptions (Continued)

TERMINAL NAME	MULTIPLEXED SIGNAL NAME	I/O/Z†	FUNCTION	BK‡	RESET CONDITION
PARALLEL BUS (CONTINUED)					
C0		I/O/Z	EMIF asynchronous memory read enable or general-purpose IO8. This pin serves in one of two functions: EMIF asynchronous memory read enable (EMIF.$\overline{\text{ARE}}$) or general-purpose IO8 (GPIO8). The initial state of this pin depends on the GPIO0 pin. See Section 3.5.1 for more information.	BK	GPIO0 = 1: Output, EMIF.$\overline{\text{ARE}}$ GPIO0 = 0: Input, GPIO8
	EMIF.$\overline{\text{ARE}}$	O/Z	Active-low EMIF asynchronous memory read enable. EMIF.$\overline{\text{ARE}}$ is selected when the Parallel Port Mode bit field of the External Bus Selection Register is 00 or 01.		
	GPIO8	I/O/Z	General-purpose IO8. GPIO8 is selected when the Parallel Port Mode bit field of the External Bus Selection Register is set to 10 or 11.		
C1		O/Z	EMIF asynchronous memory output enable or HPI interrupt output. This pin serves in one of two functions: EMIF asynchronous memory output enable (EMIF.$\overline{\text{AOE}}$) or HPI interrupt output (HPI.$\overline{\text{HINT}}$). The initial state of this pin depends on the GPIO0 pin. See Section 3.5.1 for more information.		GPIO0 = 1: Output, EMIF.$\overline{\text{AOE}}$ GPIO0 = 0: Output, HPI.$\overline{\text{HINT}}$
	EMIF.$\overline{\text{AOE}}$	O/Z	Active-low asynchronous memory output enable. EMIF.$\overline{\text{AOE}}$ is selected when the Parallel Port Mode bit field of the External Bus Selection Register is 00 or 01.		
	HPI.$\overline{\text{HINT}}$	O/Z	Active-low HPI interrupt output. HPI.$\overline{\text{HINT}}$ is selected when the Parallel Port Mode bit field of the External Bus Selection Register is 10 or 11.		
C2		I/O/Z	EMIF asynchronous memory write enable or HPI read/write. This pin serves in one of two functions: EMIF asynchronous memory write enable (EMIF.$\overline{\text{AWE}}$) or HPI read/write (HPI.HR/$\overline{\text{W}}$). The initial state of this pin depends on the GPIO0 pin. See Section 3.5.1 for more information.	BK	GPIO0 = 1: Output, EMIF.$\overline{\text{AWE}}$ GPIO0 = 0: Input, HPI.HR/$\overline{\text{W}}$
	EMIF.$\overline{\text{AWE}}$	O/Z	Active-low EMIF asynchronous memory write enable. EMIF.$\overline{\text{AWE}}$ is selected when the Parallel Port Mode bit field of the External Bus Selection Register is 00 or 01.		
	HPI.HR/$\overline{\text{W}}$	I	HPI read/write. HPI.HR/$\overline{\text{W}}$ is selected when the Parallel Port Mode bit field of the External Bus Selection Register is 10 or 11. HPI.HR/$\overline{\text{W}}$ controls the direction of the HPI transfer.		
C3		I/O/Z	EMIF data ready input or HPI ready output. This pin serves in one of two functions: EMIF data ready input (EMIF.ARDY) or HPI ready output (HPI.HRDY). The initial state of this pin depends on the GPIO0 pin. See Section 3.5.1 for more information.	H	GPIO0 = 1: Input, EMIF.ARDY GPIO0 = 0: Output, HPI.HRDY
	EMIF.ARDY	I	EMIF data ready input. Used to insert wait states for slow memories. EMIF.ARDY is selected when the Parallel Port Mode bit field of the External Bus Selection Register is 00 or 01. When this pin is used as ARDY, an external 2.2 kΩ pull−up resistor is recommended.		
	HPI.HRDY	O	HPI ready output. HPI.HRDY is selected when the Parallel Port Mode bit field of the External Bus Selection Register is 10 or 11.		

† I = Input, O = Output, S = Supply, Hi-Z = High-impedance

‡ BK = bus keeper (the bus keeper maintains the previous voltage level during reset or while the output pin is not driven), PU = pullup, PD = pulldown, H = hysteresis input buffer, FS = fail-safe buffer

Table 2−3. Signal Descriptions (Continued)

TERMINAL NAME	MULTIPLEXED SIGNAL NAME	I/O/Z†	FUNCTION	BK‡	RESET CONDITION
PARALLEL BUS (CONTINUED)					
C4		I/O/Z	EMIF chip select for memory space CE0 or general-purpose IO9. This pin serves in one of two functions: EMIF chip select for memory space CE0 (EMIF.$\overline{CE0}$) or general-purpose IO9 (GPIO9). The initial state of this pin depends on the GPIO0 pin. See Section 3.5.1 for more information.	BK	GPIO0 = 1: Output, EMIF.$\overline{CE0}$ GPIO0 = 0: Input, GPIO9
	EMIF.$\overline{CE0}$	O/Z	Active-low EMIF chip select for memory space CE0. EMIF.$\overline{CE0}$ is selected when the Parallel Port Mode bit field of the External Bus Selection Register is set to 00 or 01.		
	GPIO9	I/O/Z	General-purpose IO9. GPIO9 is selected when the Parallel Port Mode bit field of the External Bus Selection Register is set to 10 or 11.		
C5		I/O/Z	EMIF chip select for memory space CE1 or general-purpose IO10. This pin serves in one of two functions: EMIF chip-select for memory space CE1 (EMIF.$\overline{CE1}$) or general-purpose IO10 (GPIO10). The initial state of this pin depends on the GPIO0 pin. See Section 3.5.1 for more information.	BK	GPIO0 = 1: Output, EMIF.$\overline{CE1}$ GPIO0 = 0: Input, GPIO10
	EMIF.$\overline{CE1}$	O/Z	Active-low EMIF chip select for memory space CE1. EMIF.$\overline{CE1}$ is selected when the Parallel Port Mode bit field of the External Bus Selection Register is set to 00 or 01.		
	GPIO10	I/O/Z	General-purpose IO10. GPIO10 is selected when the Parallel Port Mode bit field of the External Bus Selection Register is set to 10 or 11.		
C6		I/O/Z	EMIF chip select for memory space CE2 or HPI control input 0. This pin serves in one of two functions: EMIF chip-select for memory space CE2 (EMIF.$\overline{CE2}$) or HPI control input 0 (HPI.HCNTL0). The initial state of this pin depends on the GPIO0 pin. See Section 3.5.1 for more information.	BK	GPIO0 = 1: Output, EMIF.$\overline{CE2}$ GPIO0 = 0: Input, HPI.HCNTL0
	EMIF.$\overline{CE2}$	O/Z	Active-low EMIF chip select for memory space CE2. EMIF.$\overline{CE2}$ is selected when the Parallel Port Mode bit field of the External Bus Selection Register is set to 00 or 01.		
	HPI.HCNTL0	I	HPI control input 0. This pin, in conjunction with HPI.HCNTL1, selects a host access to one of the three HPI registers. HPI.HCNTL0 is selected when the Parallel Port Mode bit field of the External Bus Selection Register is set to 10 or 11.		
C7		I/O/Z	EMIF chip select for memory space CE3, general-purpose IO11, or HPI control input 1. This pin serves in one of three functions: EMIF chip-select for memory space CE3 (EMIF.$\overline{CE3}$), general-purpose IO11 (GPIO11), or HPI control input 1 (HPI.HCNTL1). The initial state of this pin depends on the GPIO0 pin. See Section 3.5.1 for more information.	BK	GPIO0 = 1: Output, EMIF.$\overline{CE3}$ GPIO0 = 0: Input, HPI.HCNTL1
	EMIF.$\overline{CE3}$	O/Z	Active-low EMIF chip select for memory space CE3. EMIF.$\overline{CE3}$ is selected when the Parallel Port Mode bit field is of the External Bus Selection Register set to 00 or 01.		
	GPIO11	I/O/Z	General-purpose IO11. GPIO11 is selected when the Parallel Port Mode bit field is set to 10.		
	HPI.HCNTL1	I	HPI control input 1. This pin, in conjunction with HPI.HCNTL0, selects a host access to one of the three HPI registers. The HPI.HCNTL1 mode is selected when the Parallel Port Mode bit field is set to 11.		

† I = Input, O = Output, S = Supply, Hi-Z = High-impedance

‡ BK = bus keeper (the bus keeper maintains the previous voltage level during reset or while the output pin is not driven), PU = pullup, PD = pulldown, H = hysteresis input buffer, FS = fail-safe buffer

Table 2−3. Signal Descriptions (Continued)

TERMINAL NAME	MULTIPLEXED SIGNAL NAME	I/O/Z†	FUNCTION	BK‡	RESET CONDITION
PARALLEL BUS (CONTINUED)					
C8		I/O/Z	EMIF byte enable 0 control or HPI byte identification. This pin serves in one of two functions: EMIF byte enable 0 control (EMIF.$\overline{\text{BE0}}$) or HPI byte identification (HPI.$\overline{\text{HBE0}}$). The initial state of this pin depends on the GPIO0 pin. See Section 3.5.1 for more information.	BK	GPIO0 = 1: Output, EMIF.$\overline{\text{BE0}}$ GPIO0 = 0: Input, HPI.$\overline{\text{HBE0}}$
	EMIF.$\overline{\text{BE0}}$	O/Z	Active-low EMIF byte enable 0 control. EMIF.$\overline{\text{BE0}}$ is selected when the Parallel Port Mode bit field of the External Bus Selection Register is set to 00 or 01.		
	HPI.$\overline{\text{HBE0}}$	I	HPI byte identification. This pin, in conjunction with HPI.$\overline{\text{HBE1}}$, identifies the first or second byte of the transfer. HPI.$\overline{\text{HBE0}}$ is selected when the Parallel Port Mode bit field is set to 10 or 11.		
C9		I/O/Z	EMIF byte enable 1 control or HPI byte identification. This pin serves in one of two functions: EMIF byte enable 1 control (EMIF.$\overline{\text{BE1}}$) or HPI byte identification (HPI.$\overline{\text{HBE1}}$). The initial state of this pin depends on the GPIO0 pin. See Section 3.5.1 for more information.	BK	GPIO0 = 1: Output, EMIF.$\overline{\text{BE1}}$ GPIO0 = 0: Input, HPI.$\overline{\text{HBE1}}$
	EMIF.$\overline{\text{BE1}}$	O/Z	Active-low EMIF byte enable 1 control. EMIF.$\overline{\text{BE1}}$ is selected when the Parallel Port Mode bit field of the External Bus Selection Register is set to 00 or 01.		
	HPI.$\overline{\text{HBE1}}$	I	HPI byte identification. This pin, in conjunction with HPI.$\overline{\text{HBE0}}$, identifies the first or second byte of the transfer. HPI.$\overline{\text{HBE1}}$ is selected when the Parallel Port Mode bit field is set to 10 or 11.		
C10		I/O/Z	EMIF SDRAM row strobe, HPI address strobe, or general-purpose IO12. This pin serves in one of three functions: EMIF SDRAM row strobe (EMIF.$\overline{\text{SDRAS}}$), HPI address strobe (HPI.$\overline{\text{HAS}}$), or general-purpose IO12 (GPIO12). The initial state of this pin depends on the GPIO0 pin. See Section 3.5.1 for more information.	BK	GPIO0 = 1: Output, EMIF.$\overline{\text{SDRAS}}$ GPIO0 = 0: Input, HPI.$\overline{\text{HAS}}$
	EMIF.$\overline{\text{SDRAS}}$	O/Z	Active-low EMIF SDRAM row strobe. EMIF.$\overline{\text{SDRAS}}$ is selected when the Parallel Port Mode bit field of the External Bus Selection Register is set to 00 or 01.		
	HPI.$\overline{\text{HAS}}$	I	Active-low HPI address strobe. This signal latches the address in the HPIA register in the HPI Multiplexed mode. HPI.$\overline{\text{HAS}}$ is selected when the Parallel Port Mode bit field is set to 11.		
	GPIO12	I/O/Z	General-purpose IO12. GPIO12 is selected when the Parallel Port Mode bit field is set to 10.		

† I = Input, O = Output, S = Supply, Hi-Z = High-impedance

‡ BK = bus keeper (the bus keeper maintains the previous voltage level during reset or while the output pin is not driven), PU = pullup, PD = pulldown, H = hysteresis input buffer, FS = fail-safe buffer

Table 2−3. Signal Descriptions (Continued)

TERMINAL NAME	MULTIPLEXED SIGNAL NAME	I/O/Z†	FUNCTION	BK‡	RESET CONDITION
PARALLEL BUS (CONTINUED)					
C11		I/O/Z	EMIF SDRAM column strobe or HPI chip select input. This pin serves in one of two functions: EMIF SDRAM column strobe (EMIF.$\overline{\text{SDCAS}}$) or HPI chip select input (HPI.$\overline{\text{HCS}}$). The initial state of this pin depends on the GPIO0 pin. See Section 3.5.1 for more information.	BK	GPIO0 = 1: Output, EMIF.$\overline{\text{SDCAS}}$ GPIO0 = 0: Input, HPI.$\overline{\text{HCS}}$
	EMIF.$\overline{\text{SDCAS}}$	O/Z	Active-low EMIF SDRAM column strobe. EMIF.$\overline{\text{SDCAS}}$ is selected when the Parallel Port Mode bit field of the External Bus Selection Register is set to 00 or 01.		
	HPI.$\overline{\text{HCS}}$	I	HPI Chip Select Input. HPI.$\overline{\text{HCS}}$ is the select input for the HPI and must be driven low during accesses. HPI.$\overline{\text{HCS}}$ is selected when the Parallel Port Mode bit field is set to 10 or 11.		
C12		I/O/Z	EMIF SDRAM write enable or HPI Data Strobe 1 input. This pin serves in one of two functions: EMIF SDRAM write enable (EMIF.$\overline{\text{SDWE}}$) or HPI data strobe 1 (HPI.$\overline{\text{HDS1}}$). The initial state of this pin depends on the GPIO0 pin. See Section 3.5.1 for more information.	BK	GPIO0 = 1: Output, EMIF.$\overline{\text{SDWE}}$ GPIO0 = 0: Input, HPI.$\overline{\text{HDS1}}$
	EMIF.$\overline{\text{SDWE}}$	O/Z	EMIF SDRAM write enable. EMIF. $\overline{\text{SDWE}}$ is selected when the Parallel Port Mode bit field of the External Bus Selection Register is set to 00 or 01.		
	HPI.$\overline{\text{HDS1}}$	I	HPI Data Strobe 1 Input. HPI.$\overline{\text{HDS1}}$ is driven by the host read or write strobes to control the transfer. HPI.$\overline{\text{HDS1}}$ is selected when the Parallel Port Mode bit field is set to 10 or 11.		
C13		I/O/Z	SDRAM A10 address line or general-purpose IO13. This pin serves in one of two functions: SDRAM A10 address line (EMIF.SDA10) or general-purpose IO13 (GPIO13). The initial state of this pin depends on the GPIO0 pin. See Section 3.5.1 for more information.	BK	GPIO0 = 1: Output, EMIF.SDA10 GPIO0 = 0: Input, GPIO13
	EMIF.SDA10	O/Z	SDRAM A10 address line. Address line/autoprecharge disable for SDRAM memory. Serves as a row address bit (logically equivalent to A12) during ACTV commands and also disables the autoprecharging function of SDRAM during read or write operations. EMIF.SDA10 is selected when the Parallel Port Mode bit field of the External Bus Selection Register is set to 00 or 01.		
	GPIO13	I/O/Z	General-purpose IO13. GPIO13 is selected when the Parallel Port Mode bit field is set to 10 or 11.		
C14		I/O/Z	Memory interface clock for SDRAM, HPI Data Strobe 2 input, or general-purpose IO14. This pin serves in one of two functions: memory interface clock for SDRAM (EMIF.CLKMEM) or HPI data strobe 2 (HPI.$\overline{\text{HDS2}}$). The initial state of this pin depends on the GPIO0 pin. See Section 3.5.1 for more information.	BK	GPIO0 = 1: Output, EMIF.CLKMEM GPIO0 = 0: Input, HPI.$\overline{\text{HDS2}}$
	EMIF.CLKMEM	O/Z	Memory interface clock for SDRAM. EMIF.CLKMEM is selected when the Parallel Port Mode bit field of the External Bus Selection Register is set to 00 or 01.		
	HPI.$\overline{\text{HDS2}}$	I	HPI Data Strobe 2 Input. HPI.$\overline{\text{HDS2}}$ is driven by the host read or write strobes to control the transfer. HPI.$\overline{\text{HDS2}}$ is selected when the Parallel Port Mode bit field is set to 10 or 11.		

† I = Input, O = Output, S = Supply, Hi-Z = High-impedance

‡ BK = bus keeper (the bus keeper maintains the previous voltage level during reset or while the output pin is not driven), PU = pullup, PD = pulldown, H = hysteresis input buffer, FS = fail-safe buffer

Table 2−3. Signal Descriptions (Continued)

TERMINAL NAME	MULTIPLEXED SIGNAL NAME	I/O/Z†	FUNCTION	BK‡	RESET CONDITION
INTERRUPT AND RESET PINS					
$\overline{\text{INT}}$[4:0]		I	Active-low external user interrupt inputs. $\overline{\text{INT}}$[4:0] are maskable and are prioritized by the interrupt enable register (IER) and the interrupt mode bit.	H, FS	Input
$\overline{\text{RESET}}$		I	Active-low reset. $\overline{\text{RESET}}$ causes the digital signal processor (DSP) to terminate execution and forces the program counter to FF8000h. When $\overline{\text{RESET}}$ is brought to a high level, execution begins at location FF8000h of program memory. $\overline{\text{RESET}}$ affects various registers and status bits. Use an external pullup resistor on this pin.	H, FS	Input
BIT I/O SIGNALS					
GPIO[7:6,4:0] (LQFP) GPIO[7:0] (BGA)		I/O/Z	7-bit (LQFP package) or 8-bit (BGA package) Input/Output lines that can be individually configured as inputs or outputs, and also individually set or reset when configured as outputs. At reset, these pins are configured as inputs. After reset, the on-chip bootloader samples GPIO[3:0] to determine the boot mode selected.	BK (GPIO5 only) H (except GPIO5)	Input
	EMIF.CKE (GPIO4)	O/Z	SDRAM CKE signal. The GPIO4 pin can be configured to serve as SDRAM CKE pin by setting the following bits in the External Bus Selection Register: CKE SEL = 1 and CKE EN = 1. In default mode, this pin serves as GPIO4.		Input (GPIO4)
XF		O/Z	External flag. XF is set high by the BSET XF instruction, set low by BCLR XF instruction or by loading ST1. XF is used for signaling other processors in multiprocessor configurations or used as a general-purpose output pin. XF goes into the high-impedance state when $\overline{\text{OFF}}$ is low, and is set high following reset.		Output
	EMIF.CKE	O/Z	SDRAM CKE signal. The XF pin can be configured to serve as SDRAM CKE pin by setting the following bits in the External Bus Selection Register: CKE SEL = 0 and CKE EN = 1. In default mode, this pin serves as XF.		Output (XF)
OSCILLATOR/CLOCK SIGNALS					
CLKOUT		O/Z	DSP clock output signal. CLKOUT cycles at the machine-cycle rate of the CPU. CLKOUT goes into high-impedance state when $\overline{\text{OFF}}$ is low.		Output
X2/CLKIN		I/O	System clock/oscillator input. If the internal oscillator is not being used, X2/CLKIN functions as the clock input. NOTE: The USB module requires a 48 MHz clock. Since this input clock is used by both the CPU PLL and the USB module PLL, it must be a factor of 48 MHz in order for the programmable PLL to produce the required 48 MHz USB module clock. In CLKGEN domain idle (OSC IDLE) mode, this pin becomes output and is driven low to stop external crystals (if used) from oscillating or an external clock source from driving the DSP's internal logic.		Oscillator Input
X1		O	Output pin from the internal system oscillator for the crystal. If the internal oscillator is not used, X1 should be left unconnected. X1 does not go into the high-impedance state when $\overline{\text{OFF}}$ is low.		Oscillator Output

† I = Input, O = Output, S = Supply, Hi-Z = High-impedance

‡ BK = bus keeper (the bus keeper maintains the previous voltage level during reset or while the output pin is not driven), PU = pullup, PD = pulldown, H = hysteresis input buffer, FS = fail-safe buffer

Table 2−3. Signal Descriptions (Continued)

TERMINAL NAME	MULTIPLEXED SIGNAL NAME	I/O/Z†	FUNCTION	BK‡	RESET CONDITION
TIMER SIGNALS					
TIN/TOUT0		I/O/Z	Timer0 Input/Output. When output, TIN/TOUT0 signals a pulse or a change of state when the on-chip timer counts down past zero. When input, TIN/TOUT0 provides the clock source for the internal timer module. At reset, this pin is configured as an input. NOTE: Only the Timer0 signal is brought out. The Timer1 signal is terminated internally and is not available for external use.	H	Input
REAL-TIME CLOCK					
RTCINX1		I	Real-Time Clock Oscillator input		Input
RTCINX2		O	Real-Time Clock Oscillator output		Output
I2C					
SDA		I/O/Z	I2C (bidirectional) data. At reset, this pin is in high-impedance mode.	H	Hi-Z
SCL		I/O/Z	I2C (bidirectional) clock. At reset, this pin is in high-impedance mode.	H	Hi-Z
MULTICHANNEL BUFFERED SERIAL PORTS SIGNALS					
CLKR0		I/O/Z	McBSP0 receive clock. CLKR0 serves as the serial shift clock for the serial port receiver. At reset, this pin is in high-impedance mode.	H	Hi-Z
DR0		I	McBSP0 receive data	FS	Input
FSR0		I/O/Z	McBSP0 receive frame synchronization. The FSR0 pulse initiates the data receive process over DR0. At reset, this pin is in high-impedance mode.		Hi-Z
CLKX0		I/O/Z	McBSP0 transmit clock. CLKX0 serves as the serial shift clock for the serial port transmitter. The CLKX0 pin is configured as input after reset.	H	Input
DX0		O/Z	McBSP0 transmit data. DX0 is placed in the high-impedance state when not transmitting, when $\overline{\text{RESET}}$ is asserted, or when $\overline{\text{OFF}}$ is low.		Hi-Z
FSX0		I/O/Z	McBSP0 transmit frame synchronization. The FSX0 pulse initiates the data transmit process over DX0. Configured as an input following reset.		Input
S10		I/O/Z	McBSP1 receive clock or MultiMedia Card/Secure Digital1 command/response. At reset, this pin is configured as McBSP1.CLKR.	H	Input
	McBSP1.CLKR	I/O/Z	McBSP1 receive clock. McBSP1.CLKR serves as the serial shift clock for the serial port receiver. McBSP1.CLKR is selected when the External Bus Selection Register has 00 in the Serial Port1 Mode bit field or following reset.		
	MMC1.CMD SD1.CMD	I/O/Z	MMC1 or SD1 command/response is selected when the External Bus Selection Register has 10 in the Serial Port1 Mode bit field.		
S11		I/O/Z	McBSP1 data receive or Secure Digital1 data1. At reset, this pin is configured as McBSP1.DR.		Input
	McBSP1.DR	I/Z	McBSP1 serial data receive. McBSP1.DR is selected when the External Bus Selection Register has 00 in the Serial Port1 Mode bit field or following reset.		
	SD1.DAT1	I/O/Z	SD1 data1 is selected when the External Bus Selection Register has 10 in the Serial Port1 Mode bit field.		

† I = Input, O = Output, S = Supply, Hi-Z = High-impedance

‡ BK = bus keeper (the bus keeper maintains the previous voltage level during reset or while the output pin is not driven), PU = pullup, PD = pulldown, H = hysteresis input buffer, FS = fail-safe buffer

Table 2−3. Signal Descriptions (Continued)

TERMINAL NAME	MULTIPLEXED SIGNAL NAME	I/O/Z†	FUNCTION	BK‡	RESET CONDITION
MULTICHANNEL BUFFERED SERIAL PORTS SIGNALS (CONTINUED)					
S12		I/O/Z	McBSP1 receive frame synchronization or Secure Digital1 data2. At reset, this pin is configured as McBSP1.FSR.		Input
	McBSP1.FSR	I/Z	McBSP1 receive frame synchronization. The McBSP1.FSR pulse initiates the data receive process over McBSP1.DR.		
	SD1.DAT2	I/O/Z	SD1 data2 is selected when the External Bus Selection Register has 10 in the Serial Port1 Mode bit field.		
S13		O/Z	McBSP1 serial data transmit or MultiMedia Card/Secure Digital1 serial clock. At reset, this pin is configured as McBSP1.DX.	BK	Hi-Z
	McBSP1.DX	O/Z	McBSP1 serial data transmit. McBSP1.DX is placed in the high-impedance state when not transmitting, when $\overline{\text{RESET}}$ is asserted, or when $\overline{\text{OFF}}$ is low. McBSP1.DX is selected when the External Bus Selection Register has 00 in the Serial Port1 Mode bit field or following reset.		
	MMC1.CLK SD1.CLK	O	MMC1 or SD1 serial clock is selected when the External Bus Selection Register has 10 in the Serial Port1 Mode bit field.		
S14		I/O/Z	McBSP1 transmit clock or MultiMedia Card/Secure Digital1 data0. At reset, this pin is configured as McBSP1.CLKX.	H	Input
	McBSP1.CLKX	I/O/Z	McBSP1 transmit clock. McBSP1.CLKX serves as the serial shift clock for the serial port transmitter. The McBSP1.CLKX pin is configured as input after reset. McBSP1.CLKX is selected when the External Bus Selection Register has 00 in the Serial Port1 Mode bit field or following reset.		
	MMC1.DAT SD1.DAT0	I/O/Z	MMC1 or SD1 data0 is selected when the External Bus Selection Register has 10 in the Serial Port1 Mode Bit field.		
S15		I/O/Z	McBSP1 transmit frame synchronization or Secure Digital1 data3. At reset, this pin is configured as McBSP1.FSX.		Input
	McBSP1.FSX	I/O/Z	McBSP1 transmit frame synchronization. The McBSP1.FSX pulse initiates the data transmit process over McBSP1.DX. Configured as an input following reset. McBSP1.FSX is selected when the External Bus Selection Register has 00 in the Serial Port1 Mode bit field or following reset.		
	SD1.DAT3	I/O/Z	SD1 data3 is selected when the External Bus Selection Register has 10 in the Serial Port1 Mode bit field.		
S20		I/O/Z	McBSP2 receive clock or MultiMedia Card/Secure Digital2 command/response. At reset, this pin is configured as McBSP2.CLKR.	H	Input
	McBSP2.CLKR	I/O/Z	McBSP2 receive clock. McBSP2.CLKR serves as the serial shift clock for the serial port receiver. McBSP2.CLKR is selected when the External Bus Selection Register has 00 in the Serial Port2 Mode bit field or following reset.		
	MMC2.CMD SD2.CMD	I/O/Z	MMC2 or SD2 command/response is selected when the External Bus Selection Register has 10 in the Serial Port2 Mode bit field.		

† I = Input, O = Output, S = Supply, Hi-Z = High-impedance

‡ BK = bus keeper (the bus keeper maintains the previous voltage level during reset or while the output pin is not driven), PU = pullup, PD = pulldown, H = hysteresis input buffer, FS = fail-safe buffer

Table 2−3. Signal Descriptions (Continued)

TERMINAL NAME	MULTIPLEXED SIGNAL NAME	I/O/Z†	FUNCTION	BK‡	RESET CONDITION
MULTICHANNEL BUFFERED SERIAL PORTS SIGNALS (CONTINUED)					
S21		I/O/Z	McBSP2 data receive or Secure Digital2 data1. At reset, this pin is configured as McBSP2.DR.		Input
	McBSP2.DR	I	McBSP2 serial data receive. McBSP2.DR is selected when the External Bus Selection Register has 00 in the Serial Port2 Mode bit field or following reset.		
	SD2.DAT1	I/O/Z	SD2 data1 is selected when the External Bus Selection Register has 10 in the Serial Port2 Mode bit field.		
S22		I/O/Z	McBSP2 receive frame synchronization or Secure Digital2 data2. At reset, this pin is configured as McBSP2.FSR.		Input
	McBSP2.FSR	I	McBSP2 receive frame synchronization. The McBSP2.FSR pulse initiates the data receive process over McBSP2.DR.		
	SD2.DAT2	I/O/Z	SD2 data2 is selected when the External Bus Selection Register has 10 in the Serial Port2 Mode bit field.		
S23		O/Z	McBSP2 data transmit or MultiMedia Card/Secure Digital2 serial clock. At reset, this pin is configured as McBSP2.DX.	BK	Hi-Z
	McBSP2.DX	O/Z	McBSP2 serial data transmit. McBSP2.DX is placed in the high-impedance state when not transmitting, when $\overline{\text{RESET}}$ is asserted, or when $\overline{\text{OFF}}$ is low. McBSP2.DX is selected when the External Bus Selection Register has 00 in the Serial Port2 Mode bit field or following reset.		
	MMC2.CLK SD2.CLK	O	MMC2 or SD2 serial clock is selected when the External Bus Selection Register has 10 in the Serial Port2 Mode bit field.		
S24		I/O/Z	McBSP2 transmit clock or MultiMedia Card/Secure Digital2 data0. At reset, this pin is configured as McBSP2.CLKX.	H	Input
	McBSP2.CLKX	I/O/Z	McBSP2 transmit clock. McBSP2.CLKX serves as the serial shift clock for the serial port transmitter. The McBSP2.CLKX pin is configured as input after reset. McBSP2.CLKX is selected when the External Bus Selection Register has 00 in the Serial Port2 Mode bit field or following reset.		
	MMC2.DAT SD2.DAT0	I/O/Z	MMC2 or SD2 data0 pin is selected when the External Bus Selection Register has 10 in the Serial Port2 Mode bit field.		
S25		I/O/Z	McBSP2 transmit frame synchronization or Secure Digital2 data3. At reset, this pin is configured as McBSP2.FSX.		Input
	McBSP2.FSX	I/O/Z	McBSP2 frame synchronization. The McBSP2.FSX pulse initiates the data transmit process over McBSP2.DX. McBSP2.FSX is configured as an input following reset. McBSP2.FSX is selected when the External Bus Selection Register has 00 in the Serial Port2 Mode bit field or following reset.		
	SD2.DAT3	I/O/Z	SD2 data3 is selected when the External Bus Selection Register has 10 in the Serial Port2 Mode bit field.		

† I = Input, O = Output, S = Supply, Hi-Z = High-impedance

‡ BK = bus keeper (the bus keeper maintains the previous voltage level during reset or while the output pin is not driven), PU = pullup, PD = pulldown, H = hysteresis input buffer, FS = fail-safe buffer

Table 2−3. Signal Descriptions (Continued)

TERMINAL NAME	MULTIPLEXED SIGNAL NAME	I/O/Z†	FUNCTION	BK‡	RESET CONDITION
USB					
DP		I/O/Z	Differential (positive) receive/transmit. At reset, this pin is configured as input.		Input
DN		I/O/Z	Differential (negative) receive/transmit. At reset, this pin is configured as input.		Input
PU		O/Z	Pullup output. This pin is used to pull up the detection resistor required by the USB specification. The pin is internally connected to $USBV_{DD}$ via a software controllable switch (CONN bit of the USBCTL register).		Hi-Z
A/D					
AIN0		I	Analog Input Channel 0		Input
AIN1		I	Analog Input Channel 1		Input
AIN2 (BGA only)		I	Analog Input Channel 2. (BGA package only)		Input
AIN3 (BGA only)		I	Analog Input Channel 3. (BGA package only)		Input
TEST/EMULATION PINS					
TCK		I	IEEE standard 1149.1 test clock. TCK is normally a free-running clock signal with a 50% duty cycle. The changes on test access port (TAP) of input signals TMS and TDI are clocked into the TAP controller, instruction register, or selected test data register on the rising edge of TCK. Changes at the TAP output signal (TDO) occur on the falling edge of TCK.	PU H	Input
TDI		I	IEEE standard 1149.1 test data input. Pin with internal pullup device. TDI is clocked into the selected register (instruction or data) on a rising edge of TCK.	PU	Input
TDO		O/Z	IEEE standard 1149.1 test data output. The contents of the selected register (instruction or data) are shifted out of TDO on the falling edge of TCK. TDO is in the high-impedance state except when the scanning of data is in progress.		Hi-Z
TMS		I	IEEE standard 1149.1 test mode select. Pin with internal pullup device. This serial control input is clocked into the TAP controller on the rising edge of TCK.	PU	Input
$\overline{\text{TRST}}$		I	IEEE standard 1149.1 test reset. $\overline{\text{TRST}}$, when high, gives the IEEE standard 1149.1 scan system control of the operations of the device. If $\overline{\text{TRST}}$ is not connected or driven low, the device operates in its functional mode, and the IEEE standard 1149.1 signals are ignored. This pin has an internal pulldown.	PD FS	Input
EMU0		I/O/Z	Emulator 0 pin. When $\overline{\text{TRST}}$ is driven low, EMU0 must be high for activation of the $\overline{\text{OFF}}$ condition. When $\overline{\text{TRST}}$ is driven high, EMU0 is used as an interrupt to or from the emulator system and is defined as I/O by way of the IEEE standard 1149.1 scan system.	PU	Input

† I = Input, O = Output, S = Supply, Hi-Z = High-impedance

‡ BK = bus keeper (the bus keeper maintains the previous voltage level during reset or while the output pin is not driven), PU = pullup, PD = pulldown, H = hysteresis input buffer, FS = fail-safe buffer

Table 2−3. Signal Descriptions (Continued)

TERMINAL NAME	MULTIPLEXED SIGNAL NAME	I/O/Z†	FUNCTION	BK‡	RESET CONDITION
TEST/EMULATION PINS (CONTINUED)					
EMU1/$\overline{OFF}$		I/O/Z	Emulator 1 pin/disable all outputs. When $\overline{TRST}$ is driven high, EMU1/$\overline{OFF}$ is used as an interrupt to or from the emulator system and is defined as I/O by way of IEEE standard 1149.1 scan system. When $\overline{TRST}$ is driven low, EMU1/$\overline{OFF}$ is configured as $\overline{OFF}$. The EMU1/$\overline{OFF}$ signal, when active-low, puts all output drivers into the high-impedance state. Note that $\overline{OFF}$ is used exclusively for testing and emulation purposes (not for multiprocessing applications). Therefore, for the $\overline{OFF}$ condition, the following apply: $\overline{TRST}$ = low, EMU0 = high, EMU1/$\overline{OFF}$ = low	PU	Input
SUPPLY PINS					
CV_{DD}		S	Digital Power, + V_{DD}. Dedicated power supply for the core CPU.		
DV_{DD}		S	Digital Power, + V_{DD}. Dedicated power supply for the I/O pins.		
$USBV_{DD}$		S	Digital Power, + V_{DD}. Dedicated power supply for the I/O of the USB module (DP, DN , and PU)		
RDV_{DD}		S	Digital Power, + V_{DD}. Dedicated power supply for the I/O pins of the RTC module.		
RCV_{DD}		S	Digital Power, + V_{DD}. Dedicated power supply for the RTC module		
AV_{DD}		S	Analog Power, + V_{DD}. Dedicated power supply for the 10-bit A/D.		
ADV_{DD}		S	Analog Digital Power, + V_{DD}. Dedicated power supply for the digital portion of the 10-bit A/D.		
$USBPLLV_{DD}$		S	Digital Power, + V_{DD}. Dedicated power supply pin for the USB PLL.		
V_{SS}		S	Digital Ground. Dedicated ground for the I/O and core pins.		
AV_{SS}		S	Analog Ground. Dedicated ground for the 10-bit A/D.		
ADV_{SS}		S	Analog Digital Ground. Dedicated ground for the digital portion of the10-bit A/D.		
$USBPLLV_{SS}$		S	Digital Ground. Dedicated ground for the USB PLL.		
MISCELLANEOUS					
NC			No connection		

† I = Input, O = Output, S = Supply, Hi-Z = High-impedance

‡ BK = bus keeper (the bus keeper maintains the previous voltage level during reset or while the output pin is not driven), PU = pullup, PD = pulldown, H = hysteresis input buffer, FS = fail-safe buffer

3 Functional Overview

The following functional overview is based on the block diagram in Figure 3−1.

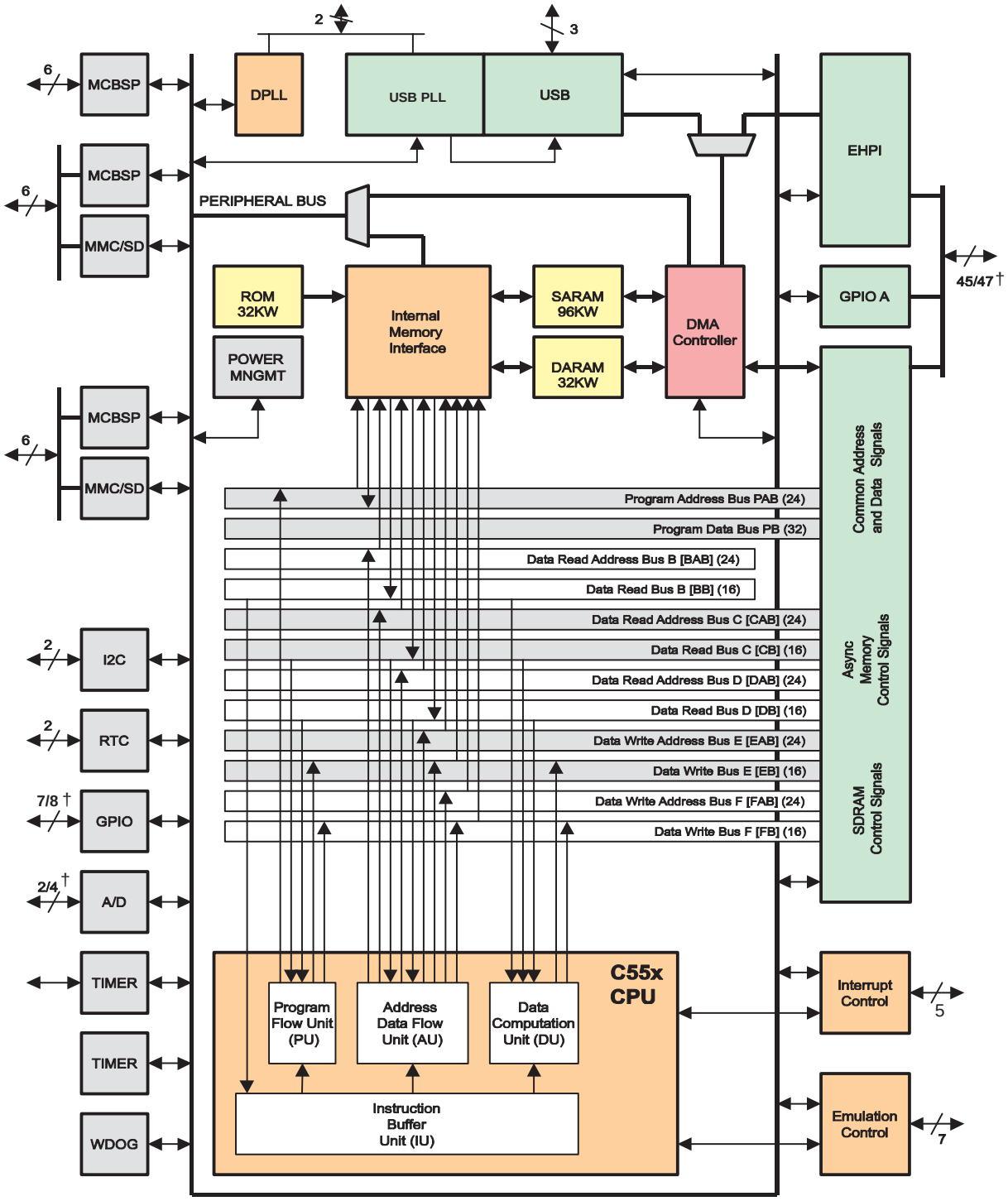

† Number of pins determined by package type.

Figure 3−1. Block Diagram of the TMS320VC5509A

3.1 Memory

The 5509A supports a unified memory map (program and data accesses are made to the same physical space). The total on-chip memory is 320K bytes (128K 16-bit words of RAM and 32K 16-bit words of ROM).

3.1.1 On-Chip Dual-Access RAM (DARAM)

The DARAM is located in the byte address range 000000h−00FFFFh and is composed of eight blocks of 8K bytes each (see Table 3−1). Each DARAM block can perform two accesses per cycle (two reads, two writes, or a read and a write). DARAM can be accessed by the internal program, data, or DMA buses. The HPI can only access the first four (32K bytes) DARAM blocks.

Table 3−1. DARAM Blocks

BYTE ADDRESS RANGE	MEMORY BLOCK
000000h − 001FFFh	DARAM 0 (HPI accessible)†
002000h − 003FFFh	DARAM 1 (HPI accessible)
004000h − 005FFFh	DARAM 2 (HPI accessible)
006000h − 007FFFh	DARAM 3 (HPI accessible)
008000h − 009FFFh	DARAM 4
00A000h − 00BFFFh	DARAM 5
00C000h − 00DFFFh	DARAM 6
00E000h − 00FFFFh	DARAM 7

† First 192 bytes are reserved for Memory-Mapped Registers (MMRs).

3.1.2 On-Chip Single-Access RAM (SARAM)

The SARAM is located at the byte address range 010000h−03FFFFh and is composed of 24 blocks of 8K bytes each (see Table 3−2). Each SARAM block can perform one access per cycle (one read or one write). SARAM can be accessed by the internal program, data, or DMA buses.

Table 3−2. SARAM Blocks

BYTE ADDRESS RANGE	MEMORY BLOCK	BYTE ADDRESS RANGE	MEMORY BLOCK
010000h − 011FFFh	SARAM 0	028000h − 029FFFh	SARAM 12
012000h − 013FFFh	SARAM 1	02A000h − 02BFFFh	SARAM 13
014000h − 015FFFh	SARAM 2	02C000h − 02DFFFh	SARAM 14
016000h − 017FFFh	SARAM 3	02E000h − 02FFFFh	SARAM 15
018000h − 019FFFh	SARAM 4	030000h − 031FFFh	SARAM 16
01A000h − 01BFFFh	SARAM 5	032000h − 033FFFh	SARAM 17
01C000h − 01DFFFh	SARAM 6	034000h − 035FFFh	SARAM 18
01E000h − 01FFFFh	SARAM 7	036000h − 037FFFh	SARAM 19
020000h − 021FFFh	SARAM 8	038000h − 039FFFh	SARAM 20
022000h − 023FFFh	SARAM 9	03A000h − 03BFFFh	SARAM 21
024000h − 025FFFh	SARAM 10	03C000h − 03DFFFh	SARAM 22
026000h − 027FFFh	SARAM 11	03E000h − 03FFFFh	SARAM 23

3.1.3 On-Chip Read-Only Memory (ROM)

The one-wait-state ROM is located at the byte address range FF0000h−FFFFFFh. The ROM is composed of one block of 32K bytes and two 16K-byte blocks, for a total of 64K bytes of ROM. The ROM address space can be mapped by software to the external memory or to the internal ROM.

NOTE: Customers can arrange to have the 5509A ROM programmed with contents unique to any particular application. Contact your local Texas Instruments representative for more information on custom ROM programming.

The standard 5509A device includes a bootloader program resident in the ROM. When the MPNMC bit field of the ST3 status register is set through software, the on-chip ROM is disabled and not present in the memory map, and byte address range FF0000h−FFFFFFh is directed to external memory space. A hardware reset always clears the MPNMC bit, so it is not possible to disable the ROM at reset. However, the software reset instruction does not affect the MPNMC bit. All three ROM blocks can be accessed by the program, data, or DMA buses. The first 16-bit word access to ROM requires three cycles. Subsequent accesses require two cycles per 16-bit word.

3.1.4 Memory Map

The 5509A provides 16M bytes of total memory space composed of on-chip RAM, on-chip ROM, and external memory space supporting a variety of memory types. The on-chip, dual-access RAM allows two accesses to a given block during the same cycle. The 5509A supports 8 blocks of 8K bytes of dual-access RAM. The on-chip, single-access RAM allows one access to a given block per clock cycle. The 5509A supports 24 blocks of 8K byte of single-access RAM.

The remainder of the memory map is external space that is divided into four spaces. Each space has a chip enable decode signal (called CE) that indicates an access to the selected space. The External Memory Interface (EMIF) supports access to asynchronous memories such as SRAM and Flash, and synchronous DRAM.

3.1.4.1 PGE Package Memory Map

The PGE package features 14 address bits representing 32K-/16K-byte linear address for asynchronous memories per CE space. Due to address row/column multiplexing, address reach for SDRAM devices is 4M bytes for each CE space. The largest SDRAM device that can be used with the 5509A in a PGE package is 128M-bit SDRAM.

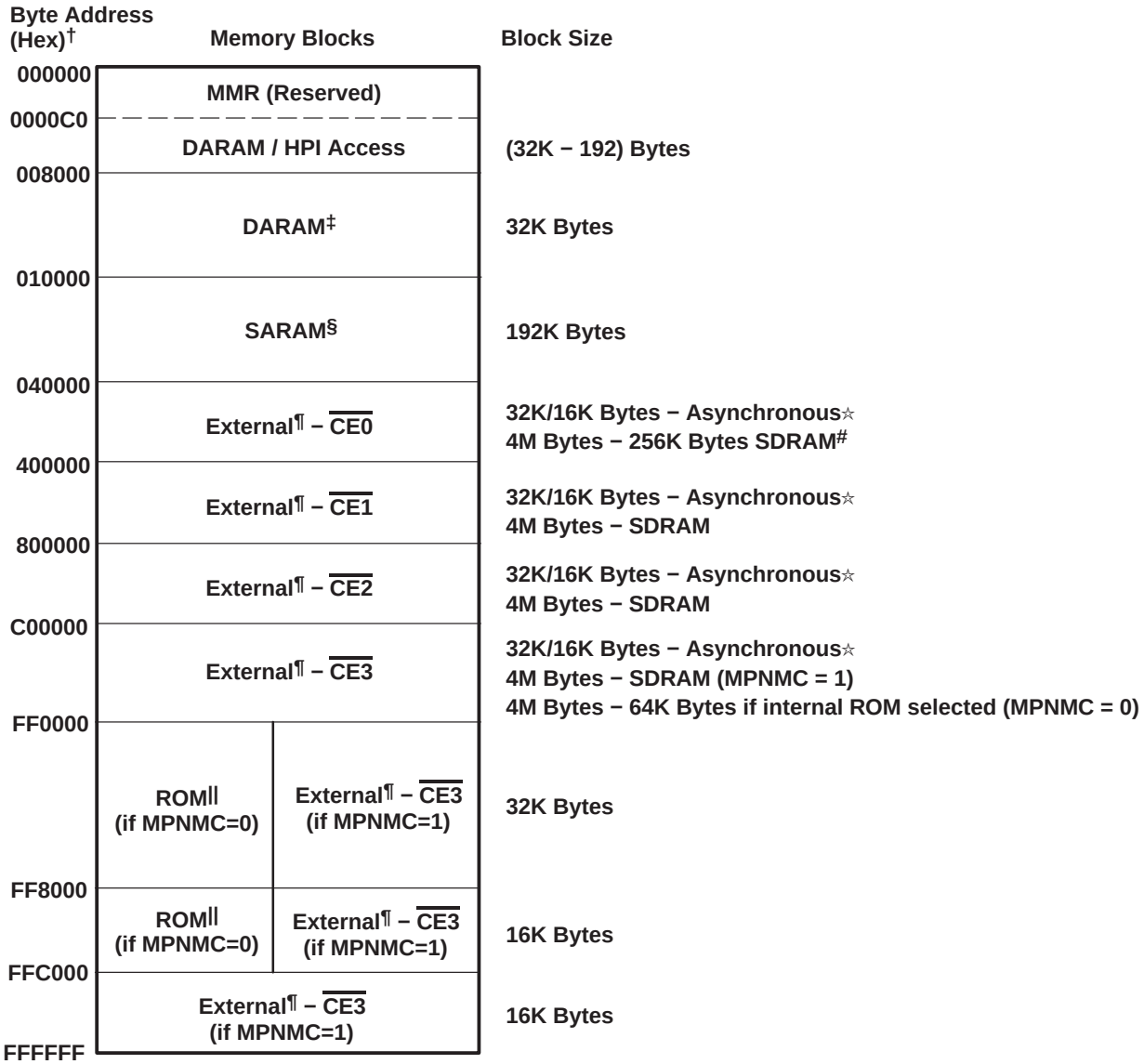

† Address shown represents the first byte address in each block.
‡ Dual-access RAM (DARAM): two accesses per cycle per block, 8 blocks of 8K bytes.
§ Single-access RAM (SARAM): one access per cycle per block, 24 blocks of 8K bytes.
¶ External memory spaces are selected by the chip-enable signal shown ($\overline{CE[0:3]}$). Supported memory types include: asynchronous static RAM (SRAM) and synchronous DRAM (SDRAM).
# The minus 256K bytes consists of 32K-byte DARAM/HPI access, 32K-byte DARAM, and 192K-byte SARAM.
‖ Read-only memory (ROM): one access every two cycles, two blocks of 32K bytes.
☆32K bytes for 16-bit-wide memory. 16K bytes for 8-bit-wide memory.

Figure 3−2. TMS320VC5509A Memory Map (PGE Package)

3.1.4.2 GHH and ZHH Package Memory Map

The GHH and ZHH packages feature 21 address bits representing 2M-byte linear address for asynchronous memories per CE space. Due to address row/column multiplexing, address reach for SDRAM devices is 4M bytes for each CE space. The largest SDRAM device that can be used with the 5509A in a GHH or ZHH package is 128M-bit SDRAM.

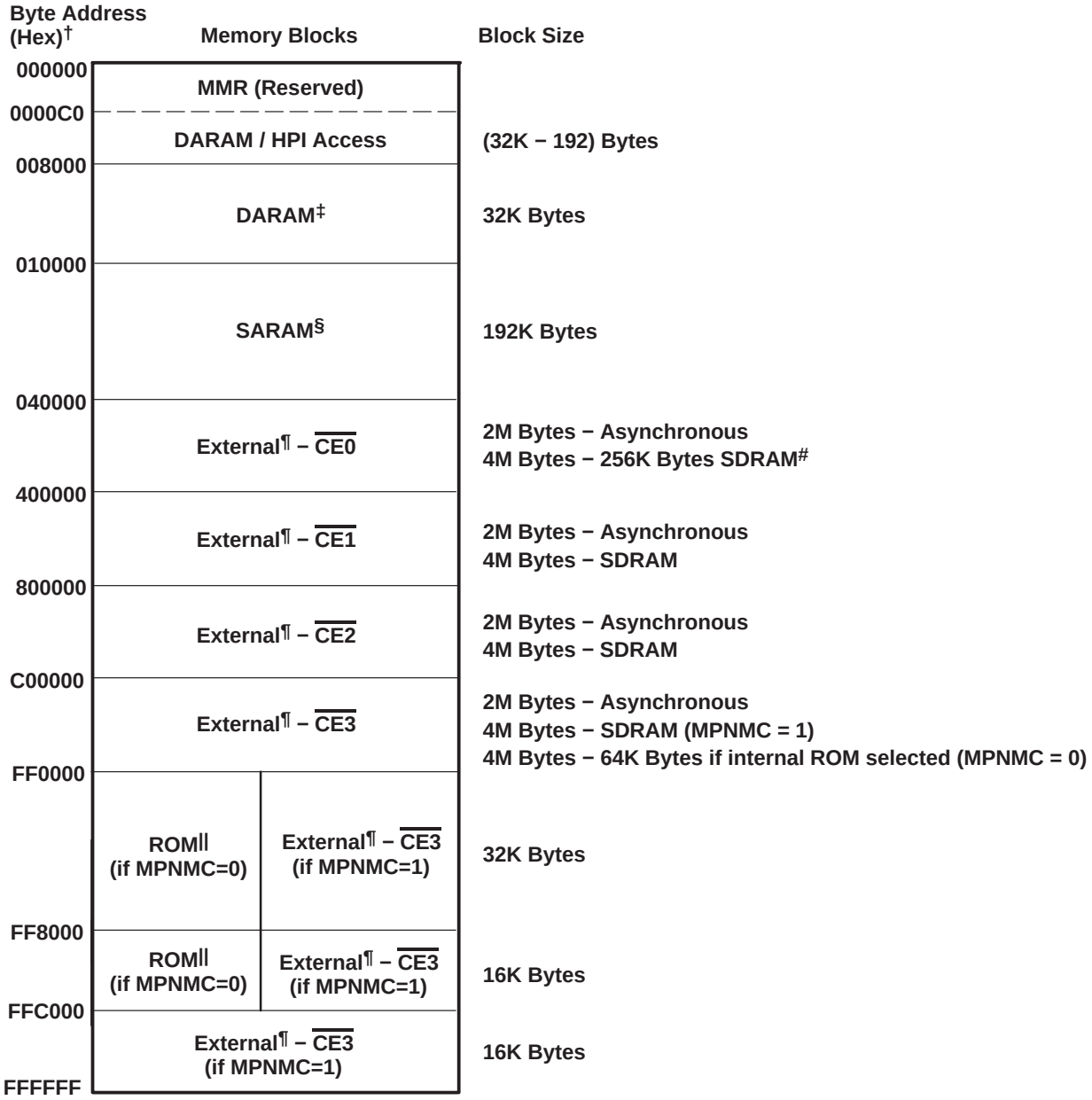

† Address shown represents the first byte address in each block.
‡ Dual-access RAM (DARAM): two accesses per cycle per block, 8 blocks of 8K bytes.
§ Single-access RAM (SARAM): one access per cycle per block, 24 blocks of 8K bytes.
¶ External memory spaces are selected by the chip-enable signal shown ($\overline{CE}$[0:3]). Supported memory types include: asynchronous static RAM (SRAM) and synchronous DRAM (SDRAM).
# The minus 256K bytes consists of 32K-byte DARAM/HPI access, 32K-byte DARAM, and 192K-byte SARAM.
‖ Read-only memory (ROM): one access every two cycles, two blocks of 32K bytes.

Figure 3−3. TMS320VC5509A Memory Map (GHH and ZHH Packages)

3.1.5 Boot Configuration

The on-chip bootloader provides a method to transfer application code and tables from an external source to the on-chip RAM memory at power up. These options include:

- Enhanced host-port interface (HPI) in multiplexed or nonmultiplexed mode
- External asynchronous memory boot (via the EMIF) from 8-bit-wide or 16-bit-wide memory
- Serial port boot (from McBSP0) with 8-bit or 16-bit data length
- Serial EPROM boot (from McBSP0) supporting EPROMs with 16-bit or 24-bit address
- USB boot
- I^2C EEPROM
- Direct execution from external 16-bit-wide asynchronous memory

External pins select the boot configuration. The values of GPIO[3:0] are sampled, following reset, upon execution of the on-chip bootloader code. It is not possible to disable the bootloader at reset because the 5509A always starts execution from the on-chip ROM following a hardware reset. A summary of boot configurations is shown in Table 3−3. For more information on using the bootloader, see the *Using the TMS320VC5503/VC5507/VC5509/VC5509A Bootloader* Application Report (literature number SPRA375).

Table 3−3. Boot Configuration Summary

GPIO0	GPIO3	GPIO2	GPIO1	BOOT MODE PROCESS
0	0	0	0	Reserved
0	0	0	1	Serial (SPI) EPROM Boot (24-bit address) via McBSP0
0	0	1	0	USB
0	0	1	1	I^2C EEPROM (7-bit address)
0	1	0	0	Reserved
0	1	0	1	HPI – multiplexed mode
0	1	1	0	HPI – nonmultiplexed mode
0	1	1	1	Reserved
1	0	0	0	Execute from 16-bit-wide asynchronous memory (on $\overline{CE1}$ space)
1	0	0	1	Serial (SPI) EPROM Boot (16-bit address) via McBSP0
1	0	1	0	8-bit asynchronous memory (on $\overline{CE1}$ space)
1	0	1	1	16-bit asynchronous memory (on $\overline{CE1}$ space)
1	1	0	0	Reserved
1	1	0	1	Reserved
1	1	1	0	Standard serial boot via McBSP0 (16-bit data)
1	1	1	1	Standard serial boot via McBSP0 (8-bit data)

3.2 Peripherals

The 5509A supports the following peripherals:

- A Configurable Parallel External Interface supporting either:
  - 16-bit external memory interface (EMIF) for asynchronous memory and/or SDRAM
  - 16-bit enhanced host-port interface (HPI)
- A six-channel direct memory access (DMA) controller
- A programmable phase-locked loop clock generator
- Two 20-bit timers
- Watchdog Timer
- Three serial ports supporting a combination of:
  - up to three multichannel buffered serial ports (McBSPs)
  - up to two MultiMedia/Secure Digital Card Interfaces
- Seven (LQFP) or Eight (BGA) configurable general-purpose I/O pins
- USB full-speed slave interface supporting:
  - Bulk
  - Interrupt
  - Isochronous
- I^2C multi-master and slave interface (I^2C compatible except, no fail-safe I/O buffers)
- Real-time clock with crystal input, separate clock domain and supply pins
- 4-channel (BGA) or 2-channel (LQFP)10-bit Successive Approximation A/D

For detailed information on the C55x™ DSP peripherals, see the following documents:

- *TMS320C55x™ DSP Functional Overview* (literature number SPRU312)
- *TMS320C55x DSP Peripherals Overview Reference Guide* (literature number SPRU317)

3.3 Direct Memory Access (DMA) Controller

The 5509A DMA provides the following features:

- Four standard ports, one for each of the following data resources: DARAM, SARAM, Peripherals and External Memory
- Six channels, which allow the DMA controller to track the context of six independent DMA channels
- Programmable low/high priority for each DMA channel
- One interrupt for each DMA channel
- Event synchronization. DMA transfers in each channel can be dependent on the occurrence of selected events.
- Programmable address modification for source and destination addresses
- Dedicated Idle Domain allows the DMA controller to be placed in a low-power (idle) state under software control.
- Dedicated DMA channel used by the HPI to access internal memory (DARAM)

The 5509A DMA controller allows transfers to be synchronized to selected events. The 5509A supports 19 separate sync events and each channel can be tied to separate sync events independent of the other channels. Sync events are selected by programming the SYNC field in the channel-specific DMA Channel Control Register (DMA_CCR).

3.3.1 DMA Channel Control Register (DMA_CCR)

The channel control register (DMA_CCR) bit layouts are shown in Figure 3−4.

15	14	13	12	11	10	9	8
DST AMODE		SRC AMODE		END PROG	Reserved	REPEAT	AUTO INIT
R/W, 00		R/W, 00		R/W, 0	R, 0	R/W, 0	R/W, 0

7	6	5	4	0
EN	PRIO	FS	SYNC	
R/W, 0	R/W, 0	R/W, 0	R/W, 00000	

LEGEND: R = Read, W = Write, *n* = value after reset

Figure 3−4. DMA_CCR Bit Locations

The SYNC[4:0] bits specify the event that can initiate the DMA transfer for the corresponding DMA channel. The five bits allow several configurations as listed in Table 3−4. The bits are set to zero upon reset. For those synchronization modes with more than one peripheral listed, the Serial Port Mode bit field of the External Bus Selection Register dictates which peripheral event is actually connected to the DMA input.

Table 3−4. Synchronization Control Function

SYNC FIELD IN DMA_CCR	SYNCHRONIZATION MODE
00000b	No event synchronized
00001b	McBSP 0 Receive Event (REVT0)
00010b	McBSP 0 Transmit Event (XEVT0)
00011b	Reserved. These bits should always be written with 0.
00100b	Reserved. These bits should always be written with 0.
00101b	McBSP1/MMC−SD1 Receive Event Serial Port 1 Mode: 00 = McBSP1 Receive Event (REVT1) 01 = MMC/SD1 Receive Event (RMMCEVT1) 10 = Reserved 11 = Reserved
00110b	McBSP1/MMC−SD1 Transmit Event Serial Port 1 Mode: 00 = McBSP1 Transmit Event (XEVT1) 01 = MMC/SD1 Transmit Event (XMMCEVT1) 10 = Reserved 11 = reserved
00111b	Reserved. These bits should always be written with 0.
01000b	Reserved. These bits should always be written with 0.
01001b	McBSP2/MMC−SD2 Receive Event Serial Port 2 Mode: 00 = McBSP2 Receive Event (REVT2) 01 = MMC/SD2 Receive Event (RMMCEVT2) 10 = Reserved 11 = Reserved

† The I^2C receive event (REVTI2C) and external interrupt 4 (INT4) share a synchronization input to the DMA. When the SYNC field of the DMA_CCR is set to 10011b, the logical OR of these two sources is used for DMA synchronization.

Table 3−4. Synchronization Control Function (Continued)

SYNC FIELD IN DMA_CCR	SYNCHRONIZATION MODE
01010b	McBSP2/MMC−SD2 Transmit Event Serial Port 2 Mode: 00 = McBSP2 Transmit Event (XEVT2) 01 = MMC/SD2 Transmit Event (XMMCEVT2) 10 = Reserved 11 = Reserved
01011b	Reserved. These bits should always be written with 0.
01100b	Reserved. These bits should always be written with 0.
01101b	Timer 0 Interrupt Event
01110b	Timer 1 Interrupt Event
01111b	External Interrupt 0
10000b	External Interrupt 1
10001b	External Interrupt 2
10010b	External Interrupt 3
10011b	External Interrupt 4 / I^2C Receive Event (REVTI2C)†
10100b	I^2C Transmit Event (XEVTI2C)
Other values	Reserved (Do not use these values)

† The I^2C receive event (REVTI2C) and external interrupt 4 (INT4) share a synchronization input to the DMA. When the SYNC field of the DMA_CCR is set to 10011b, the logical OR of these two sources is used for DMA synchronization.

3.4 I^2C Interface

The TMS320VC5509A includes an I^2C serial port. The I^2C port supports:

- Compatible with Philips I^2C Specification Revision 2.1 (January 2000)
- Operates at 100 Kbps or 400 Kbps
- 7-bit addressing mode
- Master (transmit/receive) and slave (transmit/receive) modes of operation
- Events: DMA, interrupt, or polling

The I^2C module clock *must* be in the range from 7 MHz to 12 MHz. This is necessary for proper operation of the I^2C module. With the I^2C module clock in this range, the noise filters on the SDA and SCL pins suppress noise that has a duration of 50 ns or shorter. The I^2C module clock is derived from the DSP clock divided by a programmable prescaler.

NOTE: I/O buffers are *not* fail-safe. The SDA and SCL pins could potentially draw current if the device is powered down and SDA and SCL are driven by other devices connected to the I^2C bus.

3.5 Configurable External Buses

The 5509A offers several combinations of configurations for its external parallel port and two serial ports. This allows the system designer to choose the appropriate media interface for its application without the need of a large-pin-count package. The External Bus Selection Register controls the routing of the parallel and serial port signals.

3.5.1 External Bus Selection Register (EBSR)

The External Bus Selection Register determines the mapping of the 14 (LQFP) or 21 (BGA) address signals, 16 data signals, and 15 control signals of the external parallel port. It also determines the mapping of the McBSP or MMC/SD ports to Serial Port1 and Serial Port2. The External Bus Selection Register is memory-mapped at port address 0x6C00. Once the bit fields of this register are changed, the routing of the signals takes place on the next CPU clock cycle.

The reset value of the parallel port mode bit field is determined by the state of the GPIO0 pin at reset. If GPIO0 is high at reset, the full EMIF mode is enabled and the parallel port mode bit field is set to 01. If GPIO0 is low at reset, the HPI multiplexed mode is enabled and the parallel port mode bit field is set to 11. After reset, the parallel port should be selected to function in either EMIF mode or HPI mode. Dynamic switching of the parallel port, once configured, is not recommended.

15	14	13	12	11	10	9	8
CLKOUT Disable	**OSC Disable**	**HIDL**	**$\overline{\text{BKE}}$**	**SR STAT**	**HOLD**	**HOLDA**	**CKE SEL**
R/W, 0	**R/W, 0**	**R/W, 0**	**R/W, 0**	**R/W, 0**	**R/W, 0**	**R/W, 1**	**R/W, 0**

7	6	5	4	3	2	1	0
CKE EN	**SR CMD**	**Serial Port2 Mode**		**Serial Port1 Mode**		**Parallel Port Mode**	
R/W, 0	**R/W, 0**	**R/W, 00**		**R/W, 00**		**R/W, 01 if GPIO0 = 1 11 if GPIO0 = 0**	

LEGEND: R = Read, W = Write, *n* = value after reset

Figure 3−5. External Bus Selection Register

Table 3−5. External Bus Selection Register Bit Field Description

BITS	DESCRIPTION
15	CLKOUT disable. CLKOUT disable = 0: CLKOUT enabled CLKOUT disable = 1: CLKOUT disabled
14	Oscillator disable. Works with IDLE instruction to put the clock generation domain into IDLE mode. OSC disable = 0: Oscillator enabled OSC disable = 1: Oscillator disabled
13	Host mode idle bit. (Applicable **only** if the parallel bus is configured as EHPI.) When the parallel bus is set to EHPI mode, the clock domain is not allowed to go to idle, so a host processor can access the DSP internal memory. The HIDL bit works around this restriction and allows the DSP to idle the clock domain and the EHPI. When the clock domain is in idle, a host processor will not be able to access the DSP memory. HIDL = 0: Host access to DSP enabled. Idling EHPI and clock domain is not allowed. HIDL = 1: Idles the HPI and the clock domain upon execution of the IDLE instruction when the parallel port mode is set to 10 or 11 selecting HPI mode. In addition, bit 4 of the Idle Control Register must be set to 1 prior to the execution of the IDLE instruction.
12	Bus keeper enable.† $\overline{\text{BKE}}$ = 0: Bus keeper, pullups/pulldowns enabled $\overline{\text{BKE}}$ = 1: Bus keeper, pullups/pulldowns disabled

† Function available when the port or pins configured as input.

Table 3−5. External Bus Selection Register Bit Field Description (Continued)

BITS	DESCRIPTION
11	SDRAM self-refresh status bit. SR STAT = 0: SDRAM self-refresh signal is not asserted. SR STAT = 1: SDRAM self-refresh signal is asserted
10	EMIF hold HOLD = 0: DSP drives the external memory bus HOLD = 1: Request the external memory bus to be placed in high-impedance so that another device can drive the memory bus
9	EMIF hold acknowledge. HOLDA = 0: DSP indicates that a hold request on the external memory bus has occured, the EMIF completed any pending external bus activity, and placed the external memory bus signals in high-impedance state (address bus, data bus, CE[3:0], AOE, AWE, ARE, SDRAS, SDCAS, SDWE, SDA10, CLKMEM). Once this bit is cleared, an external device can drive the bus. HOLDA = 1: No hold acknowledge
8	SDRAM CKE pin selection bit. CKE SEL = 0: Use XF for SDRAM CKE signal CKE SEL = 1: Use GPIO.4 for SDRAM CKE signal
7	SDRAM CKE enable bit. CKE EN = 0: XF or GPIO.4 operates in normal mode CKE EN = 1: Based on the CKE SEL bit, either XF or GPIO.4 drives the SDRAM CKE pin
6	SDRAM self-refresh command. SR CMD = 0: EMIF will not issue a SDRAM self-refresh command SR CMD = 1: EMIF will issue a SDRAM self-refresh command
5−4	Serial port2 mode. McBSP2 or MMC/SD2 Mode. Determines the mode of Serial Port2. Serial Port2 Mode = 00: McBSP2 mode. The McBSP2 signals are routed to the six pins of Seral Port2. Serial Port2 Mode = 01: MMC/SD2 mode. The MMC/SD2 signals are routed to the six pins of Seral Port2. Serial Port2 Mode = 10: Reserved Serial Port2 Mode = 11: Reserved.
3−2	Serial port1 mode. McBSP1 or MMC/SD1 Mode. Determines the mode of Serial Port1. Serial Port1 Mode = 00: McBSP1 mode. The McBSP1 signals are routed to the six pins of Seral Port1. Serial Port1 Mode = 01: MMC/SD1 mode. The MMC/SD1 signals are routed to the six pins of Seral Port1. Serial Port1 Mode = 10: Reserved Serial Port1 Mode = 11: Reserved.
1−0	Parallel port mode. EMIF/HPI/GPIO Mode. Determines the mode of the parallel port. Parallel Port Mode = 00: Data EMIF mode. The 16 EMIF data signals and 13 EMIF control signals are routed to the corresponding external parallel bus data and control signals. The 14 (LQFP) or 16 (BGA) address bus signals can be used as general-purpose I/O only. Parallel Port Mode = 01: Full EMIF mode. The 14 (LQFP) or 21 (BGA) address signals, 16 data signals, and 15 control signals are routed to the corresponding external parallel bus address, data, and control signals. Parallel Port Mode = 10: Non-multiplexed HPI mode. The HPI is enabled an its 14 address signals, 16 data signals, and 7 control signals are routed to the corresponding address, data, control signals of the external parallel bus. Moreover, 8 control signals of the external parallel bus are used as general-purpose I/O. Parallel Port Mode = 11: Multiplexed HPI mode. The HPI is enabled and its 16 data signals and 10 control signals are routed to the external parallel bus. In addition, 3 control signals of the external parallel bus are used as general-purpose I/O. The 14 (LQFP) or 16 (BGA) external parallel port address bus signals are used as general-purpose I/O.

† Function available when the port or pins configured as input.

3.5.2 Parallel Port

The parallel port of the 5509A consists of 14 (LQFP) or 21 (BGA) address signals, 16 data signals, and 15 control signals. Its 14 bits for address allow it to access 16K (LQFP) or 2M bytes of external memory when using the asynchronous SRAM interface. On the other hand, the SDRAM interface can access the whole external memory space of 16M bytes. The parallel bus supports four different modes:

- **Full EMIF mode:** the EMIF with its 14 (LQFP) or 21 address signals, 16 data signals, and 15 control signals routed to the corresponding external parallel bus address, data, and control signals.
- **Data EMIF mode:** the EMIF with its 16 data signals, and 15 control signals routed to the corresponding external parallel bus data and control signals. The 14 (LQFP) or 16 (BGA) address bus signals can be used as general-purpose I/O signals only.
- **Non-multiplexed HPI mode:** the HPI is enabled with its 14 address signals, 16 data signals, and 8 control signals routed to the corresponding address, data, and control signals of the external parallel bus. Moreover, 7 control signals of the external parallel bus are used as general-purpose I/O.
- **Multiplexed HPI mode:** the HPI is enabled with its 16 data signals and 10 control signals routed to the external parallel bus. In addition, 5 control signals of the external parallel bus are used as general-purpose I/O. The external parallel port's 14 (LQFP) or 16 (BGA) address signals are used as general-purpose I/O.

Table 3−6. TMS320VC5509A Parallel Port Signal Routing

Pin Signal	Data EMIF (00)†	Full EMIF (01)†	Non-Multiplex HPI (10)†	Multiplex HPI (11)†
Address Bus				
A'[0]	N/A	EMIF.A[0] (BGA)	N/A	N/A
A[0]	GPIO.A[0] (LQFP) GPIO.A[0] (BGA)	EMIF.A[0] (LQFP)	HPI.HA[0] (LQFP) HPI.HA[0] (BGA)	GPIO.A[0] (LQFP) GPIO.A[0] (BGA)
A[13:1]	GPIO.A[13:1] (LQFP) GPIO.A[13:1] (BGA)	EMIF.A[13:1] (LQFP) EMIF.A[13:1] (BGA)	HPI.HA[13:1] (LQFP) HPI.HA[13:1] (BGA)	GPIO.A[13:1] (LQFP) GPIO.A[13:1] (BGA)
A[15:14]	GPIO.A[15:14] (BGA)	EMIF.A[15:14] (BGA)	N/A	GPIO.A[15:14] (BGA)
A[20:16]‡	N/A	EMIF.A[20:16] (BGA)	N/A	N/A
Data Bus				
D[15:0]	EMIF.D[15:0]	EMIF.D[15:0]	HPI.HD[15:0]	HPI.HD[15:0]
Control Bus				
C0	EMIF.$\overline{\text{ARE}}$	EMIF.$\overline{\text{ARE}}$	GPIO8	GPIO8
C1	EMIF.$\overline{\text{AOE}}$	EMIF.$\overline{\text{AOE}}$	HPI.$\overline{\text{HINT}}$	HPI.$\overline{\text{HINT}}$
C2	EMIF.$\overline{\text{AWE}}$	EMIF.$\overline{\text{AWE}}$	HPI.HR/$\overline{\text{W}}$	HPI.HR/$\overline{\text{W}}$
C3	EMIF.ARDY	EMIF.ARDY	HPI.HRDY	HPI.HRDY
C4	EMIF.$\overline{\text{CE0}}$	EMIF.$\overline{\text{CE0}}$	GPIO9	GPIO9
C5	EMIF.$\overline{\text{CE1}}$	EMIF.$\overline{\text{CE1}}$	GPIO10	GPIO10
C6	EMIF.$\overline{\text{CE2}}$	EMIF.$\overline{\text{CE2}}$	HPI.HCNTL0	HPI.HCNTL0
C7	EMIF.$\overline{\text{CE3}}$	EMIF.$\overline{\text{CE3}}$	GPIO11	HPI.HCNTL1
C8	EMIF.$\overline{\text{BE0}}$	EMIF.$\overline{\text{BE0}}$	HPI.$\overline{\text{HBE0}}$	HPI.$\overline{\text{HBE0}}$
C9	EMIF.$\overline{\text{BE1}}$	EMIF.$\overline{\text{BE1}}$	HPI.$\overline{\text{HBE1}}$	HPI.$\overline{\text{HBE1}}$
C10	EMIF.$\overline{\text{SDRAS}}$	EMIF.$\overline{\text{SDRAS}}$	GPIO12	HPI.$\overline{\text{HAS}}$
C11	EMIF.$\overline{\text{SDCAS}}$	EMIF.$\overline{\text{SDCAS}}$	HPI.$\overline{\text{HCS}}$	HPI.$\overline{\text{HCS}}$
C12	EMIF.$\overline{\text{SDWE}}$	EMIF.$\overline{\text{SDWE}}$	HPI.$\overline{\text{HDS1}}$	HPI.$\overline{\text{HDS1}}$
C13	EMIF.SDA10	EMIF.SDA10	GPIO13	GPIO13
C14	EMIF.CLKMEM	EMIF.CLKMEM	HPI.$\overline{\text{HDS2}}$	HPI.$\overline{\text{HDS2}}$

† Represents the Parallel Port Mode bits of the External Bus Selection Register.
‡ A[20:16] of the BGA package always functions as EMIF address pins and they cannot be reconfigured for any other function.

3.5.3 Parallel Port Signal Routing

The 5509A allows access to 16-bit-wide (read and write) or 8-bit-wide (read only) asynchronous memory and 16-bit-wide SDRAM. For 16-bit-wide memories, EMIF.A[0] is kept low and is not used. To provide as many address pins as possible, the 5509A routes the parallel port signals as shown in Figure 3−6.

Figure 3−6 shows the addition of the A′[0] signal in the BGA package. This pin is used for asynchronous memory interface only, while the A[0] pin is used with HPI or GPIO. Figure 3−7 summarizes the use of the parallel port signals for memory interfacing.

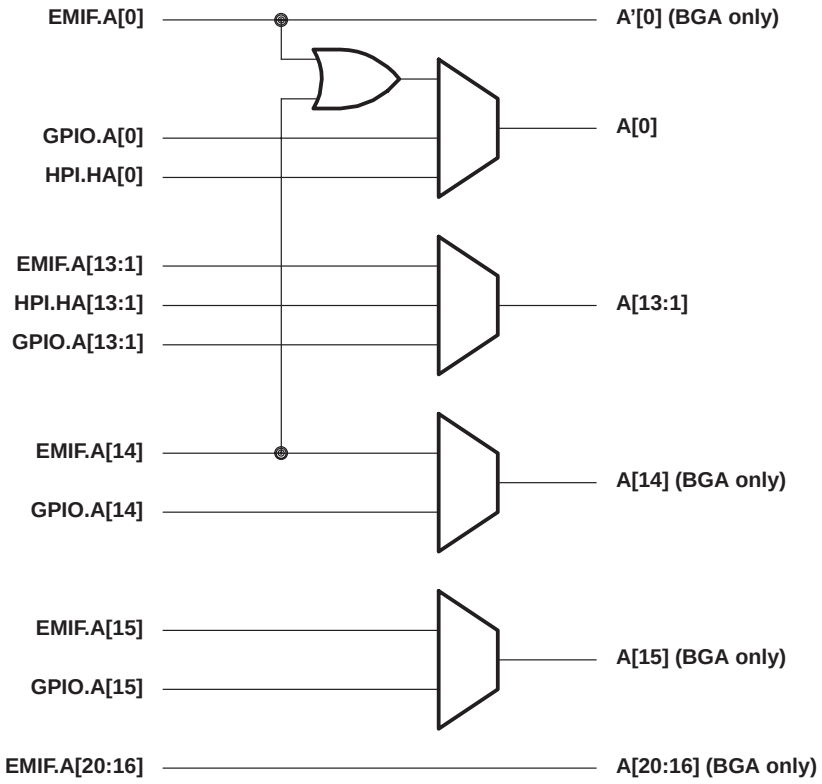

Figure 3−6. Parallel Port Signal Routing

16-Bit-Wide Asynchronous Memory

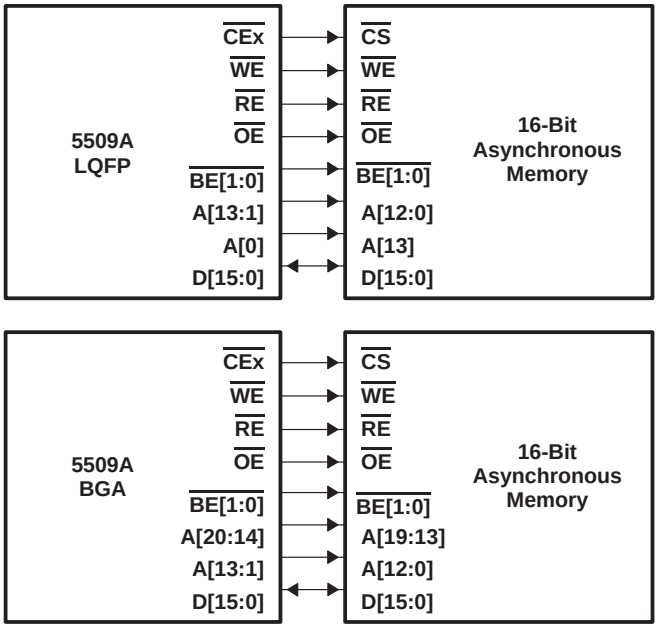

16-Bit-Wide SDRAM

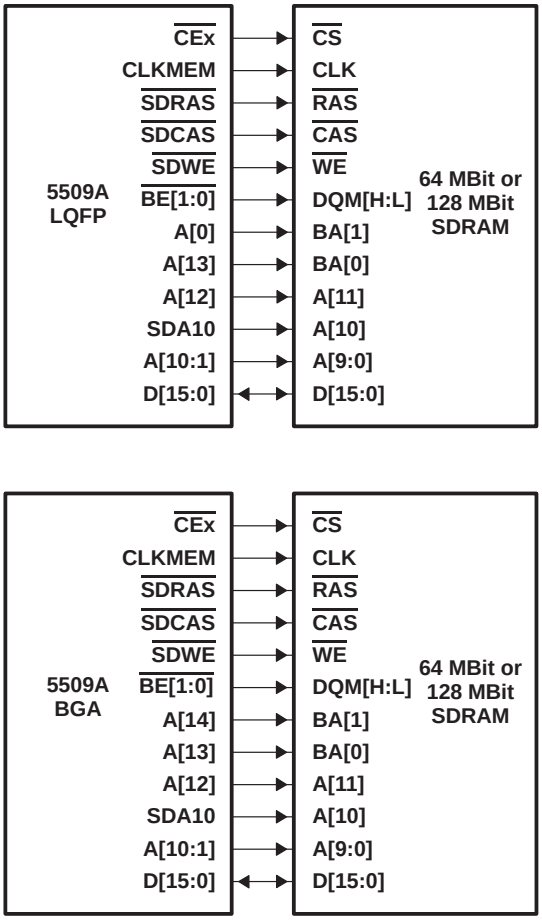

8-Bit-Wide Asynchronous Memory

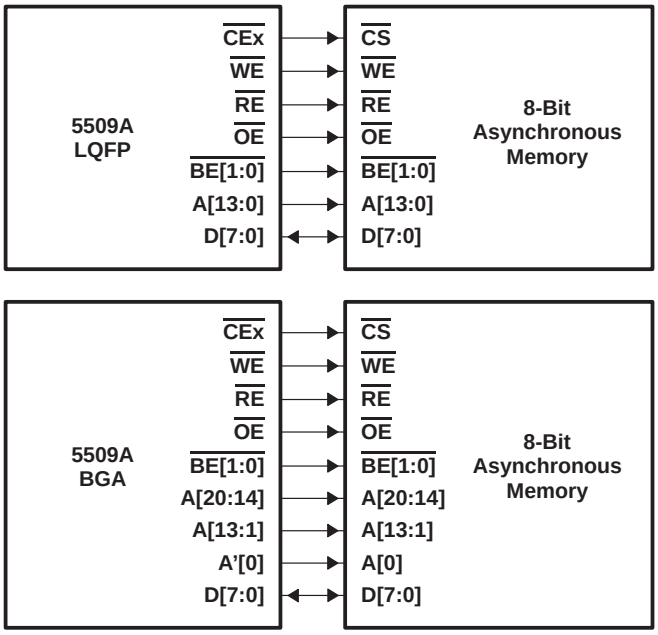

Figure 3−7. Parallel Port (EMIF) Signal Interface

3.5.4 Serial Ports

The 5509A Serial Port1 and Serial Port2 each consists of six signals that support two different modes:

- **McBSP mode:** all six signals of the McBSP are routed to the six external signals of the serial port.
- **MMC/SD mode:** all six signals of the MultiMedia Card/Secure Digital port are routed to the six external signals of the serial port.

Table 3−7. TMS320VC5509A Serial Port1 Signal Routing

PIN SIGNAL	MCBSP1 (00)†	MMC/SD1 (01)†
S10	McBSP1.CLKR	MMC1.CMD
S11	McBSP1.DR	MMC1.DAT1
S12	McBSP1.FSR	MMC1.DAT2
S13	McBSP1.DX	MMC1.CLK
S14	McBSP1.CLKX	MMC1.DAT0
S15	McBSP1.FSX	MMC1.DAT3

† Represents the Serial Port1 Mode bits of the External Bus Selection Register.

Table 3−8. TMS320VC5509A Serial Port2 Signal Routing

PIN SIGNAL	MCBSP2 (00)‡	MMC/SD2 (01)‡
S20	McBSP2.CLKR	MMC2.CMD
S21	McBSP2.DR	MMC2.DAT1
S22	McBSP2.FSR	MMC2.DAT2
S23	McBSP2.DX	MMC2.CLK
S24	McBSP2.CLKX	MMC2.DAT0
S25	McBSP2.FSX	MMC2.DAT3

‡ Represents the Serial Port2 Mode bits of the External Bus Selection Register.

3.6 General-Purpose Input/Output (GPIO) Ports

3.6.1 Dedicated General-Purpose I/O

The 5509A provides eight dedicated general-purpose input/output pins, GPIO0−GPIO7. Each pin can be indepedently configured as an input or an output using the I/O Direction Register (IODIR). The I/O Data Register (IODATA) is used to monitor the logic state of pins configured as inputs and control the logic state of pins configured as outputs. See Table 3−31 for address information. The description of the IODIR is shown in Figure 3−8 and Table 3−9. The description of IODATA is shown in Figure 3−9 and Table 3−10.

To configure a GPIO pin as an input, clear the direction bit that corresponds to the pin in IODIR to 0. To read the logic state of the input pin, read the corresponding bit in IODATA.

To configure a GPIO pin as an output, set the direction bit that corresponds to the pin in IODIR to 1. To control the logic state of the output pin, write to the corresponding bit in IODATA.

15 8	7	6	5	4	3	2	1	0
Reserved	IO7DIR	IO6DIR	IO5DIR (BGA)	IO4DIR	IO3DIR	IO2DIR	IO1DIR	IO0DIR
R−00000000	R/W−0	R/W−0	R/W−0	R/W−0	R/W−0	R/W−0	R/W−0	R/W−0

LEGEND: R = Read, W = Write, *n* = value after reset

Figure 3−8. I/O Direction Register (IODIR) Bit Layout

Table 3−9. I/O Direction Register (IODIR) Bit Functions

BIT NO.	BIT NAME	RESET VALUE	FUNCTION
15−8	Reserved	0	These bits are reserved and are unaffected by writes.
7−0	IOxDIR†	0	**IOx Direction Control Bit.** Controls whether IOx operates as an input or an output. IOxDIR = 0 IOx is configured as an input. IOxDIR = 1 IOx is configured as an output.

† The GPIO5 pin is available on the BGA package only.

15 8	7	6	5	4	3	2	1	0
Reserved	IO7D	IO6D	IO5D (BGA)	IO4D	IO3D	IO2D	IO1D	IO0D
R−00000000	R/W−pin	R/W−pin	R/W−pin	R/W−pin	R/W−pin	R/W−pin	R/W−pin	R/W−pin

LEGEND: R = Read, W = Write, *pin* = value present on the pin (IO7−IO0 default to inputs after reset)

Figure 3−9. I/O Data Register (IODATA) Bit Layout

Table 3−10. I/O Data Register (IODATA) Bit Functions

BIT NO.	BIT NAME	RESET VALUE	FUNCTION
15−8	Reserved	0	These bits are reserved and are unaffected by writes.
7−0	IOxD	pin†‡	**IOx Data Bit.** If IOx is configured as an input (IOxDIR = 0 in IODIR): IOxD = 0 The signal on the IOx pin is low. IOxD = 1 The signal on the IOx pin is high. If IOx is configured as an output (IOxDIR = 1 in IODIR): IOxD = 0 Drive the signal on the IOx pin low. IOxD = 1 Drive the signal on the IOx pin high.

† The GPIO5 pin is available on the BGA package only.
‡ *pin* = value present on the pin (IO7−IO0 default to inputs after reset)

3.6.2 Address Bus General-Purpose I/O

The 16 address signals, EMIF.A[15−0], can also be individually enabled as GPIO when the Parallel Port Mode bit field of the External Bus Selection Register is set for Data EMIF (00) or Multiplexed EHPI mode (11). These pins are controlled by three registers: the enable register, AGPIOEN, determines if the pins serve as GPIO or address (Figure 3−10); the direction register, AGPIODIR, determines if the GPIO enabled pin is an input or output (Figure 3−11); and the data register, AGPIODATA, determines the logic states of the pins in general-purpose I/O mode (Figure 3−12). Note that the AGPIOEN bits should be set prior to setting the AGPIODIR bits.

15	14	13	12	11	10	9	8
AIOEN15 (BGA)	AIOEN14 (BGA)	AIOEN13	AIOEN12	AIOEN11	AIOEN10	AIOEN9	AIOEN8
R/W, 0	R/W, 0	R/W, 0	R/W, 0	R/W, 0	R/W, 0	R/W, 0	R/W, 0
7	**6**	**5**	**4**	**3**	**2**	**1**	**0**
AIOEN7	AIOEN6	AIOEN5	AIOEN4	AIOEN3	AIOEN2	AIOEN1	AIOEN0
R/W, 0	R/W, 0	R/W, 0	R/W, 0	R/W, 0	R/W, 0	R/W, 0	R/W, 0

LEGEND: R = Read, W = Write, *n* = value after reset

Figure 3−10. Address/GPIO Enable Register (AGPIOEN) Bit Layout

Table 3−11. Address/GPIO Enable Register (AGPIOEN) Bit Functions

BIT NO.	BIT NAME	RESET VALUE	FUNCTION
15−0	AIOENx	0	Enable or disable GPIO function of Address Bus of EMIF. AIOEN15 and AIOEN14 are only available in BGA package. AIOENx = 0 GPIO function of Ax line is disabled; i.e., Ax has address function. AIOENx = 1 GPIO function of Ax line is enabled; i.e., Ax has GPIO function.

15	14	13	12	11	10	9	8
AIODIR15 (BGA)	AIODIR14 (BGA)	AIODIR13	AIODIR12	AIODIR11	AIODIR10	AIODIR9	AIODIR8
R/W, 0	R/W, 0	R/W, 0	R/W, 0	R/W, 0	R/W, 0	R/W, 0	R/W, 0

7	6	5	4	3	2	1	0
AIODIR7	AIODIR6	AIODIR5	AIODIR4	AIODIR3	AIODIR2	AIODIR1	AIODIR0
R/W, 0	R/W, 0	R/W, 0	R/W, 0	R/W, 0	R/W, 0	R/W, 0	R/W, 0

LEGEND: R = Read, W = Write, *n* = value after reset

Figure 3−11. Address/GPIO Direction Register (AGPIODIR) Bit Layout

Table 3−12. Address/GPIO Direction Register (AGPIODIR) Bit Functions

BIT NO.	BIT NAME	RESET VALUE	FUNCTION
15−0	AIODIRx	0	Data direction bits that configure the Address Bus configured as I/O pins as either input or output pins. AIODIR15 and AIODIR14 are only available in BGA package. AIODIRx = 0 Configure corresponding pin as an input. AIODIRx = 1 Configure corresponding pin as an output.

15	14	13	12	11	10	9	8
AIOD15 (BGA)	AIOD14 (BGA)	AIOD13	AIOD12	AIOD11	AIOD10	AIOD9	AIOD8
R/W, 0	R/W, 0	R/W, 0	R/W, 0	R/W, 0	R/W, 0	R/W, 0	R/W, 0

7	6	5	4	3	2	1	0
AIOD7	AIOD6	AIOD5	AIOD4	AIOD3	AIOD2	AIOD1	AIOD0
R/W, 0	R/W, 0	R/W, 0	R/W, 0	R/W, 0	R/W, 0	R/W, 0	R/W, 0

LEGEND: R = Read, W = Write, *n* = value after reset

Figure 3−12. Address/GPIO Data Register (AGPIODATA) Bit Layout

Table 3−13. Address/GPIO Data Register (AGPIODATA) Bit Functions

BIT NO.	BIT NAME	RESET VALUE	FUNCTION
15−0	AIODx	0	Data bits that are used to control the level of the Address Bus configured as I/O output pins, and to monitor the level of the Address Bus configured as I/O input pins. AIOD15 and AIOD14 are only available in BGA package. If AIODIRn = 0, then: AIODx = 0 Corresponding I/O pin is read as a low. AIODx = 1 Corresponding I/O pin is read as a high. If AIODIRn = 1, then: AIODx = 0 Set corresponding I/O pin to low. AIODx = 1 Set corresponding I/O pin to high.

3.6.3 EHPI General-Purpose I/O

Six control lines of the External Parallel Bus can also be set as general-purpose I/O when the Parallel Port Mode bit field of the External Bus Selection Register is set to Nonmultiplexed EHPI (10) or Multiplexed EHPI mode (11). These pins are controlled by three registers: the enable register, EHPIGPIOEN, determines if the pins serve as GPIO or address (Figure 3−13); the direction register, EHPIGPIODIR, determines if the GPIO enabled pin is an input or output (Figure 3−14); and the data register, EHPIGPIODATA, determines the logic states of the pins in GPIO mode (Figure 3−15).

15	6	5	4	3	2	1	0
Reserved		GPIOEN13	GPIOEN12	GPIOEN11	GPIOEN10	GPIOEN9	GPIOEN8
R, 0000 0000 00		R/W, 0	R/W, 0	R/W, 0	R/W, 0	R/W, 0	R/W, 0

LEGEND: R = Read, W = Write, *n* = value after reset

Figure 3−13. EHPI GPIO Enable Register (EHPIGPIOEN) Bit Layout

Table 3−14. EHPI GPIO Enable Register (EHPIGPIOEN) Bit Functions

BIT NO.	BIT NAME	RESET VALUE	FUNCTION
15−6	Reserved	0	Reserved
5−0	GPIOEN13−GPIOEN8	0	Enable or disable GPIO function of EHPI Control Bus. GPIOENx = 0 GPIO function of GPIOx line is disabled GPIOENx = 1 GPIO function of GPIOx line is enabled

15	6	5	4	3	2	1	0
Reserved		GPIODIR13	GPIODIR12	GPIODIR11	GPIODIR10	GPIODIR9	GPIODIR8
R, 0000 0000 00		R/W, 0	R/W, 0	R/W, 0	R/W, 0	R/W, 0	R/W, 0

LEGEND: R = Read, W = Write, *n* = value after reset

Figure 3−14. EHPI GPIO Direction Register (EHPIGPIODIR) Bit Layout

Table 3−15. EHPI GPIO Direction Register (EHPIGPIODIR) Bit Functions

BIT NO.	BIT NAME	RESET VALUE	FUNCTION
15−6	Reserved	0	Reserved
5−0	GPIODIR13−GPIODIR8	0	Data direction bits that configure the EHPI Control Bus configured as I/O pins as either input or output pins. GPIODIRx = 0 Configure corresponding pin as an input. GPIODIRx = 1 Configure corresponding pin as an output.

15 6	5	4	3	2	1	0
Reserved	GPIOD13	GPIOD12	GPIOD11	GPIOD10	GPIOD9	GPIOD8
R, 0000 0000 00	R/W, 0	R/W, 0	R/W, 0	R/W, 0	R/W, 0	R/W, 0

LEGEND: R = Read, W = Write, *n* = value after reset

Figure 3−15. EHPI GPIO Data Register (EHPIGPIODATA) Bit Layout

Table 3−16. EHPI GPIO Data Register (EHPIGPIODATA) Bit Functions

BIT NO.	BIT NAME	RESET VALUE	FUNCTION
15−6	Reserved	0	Reserved
5−0	GPIOD13−GPIOD8	0	Data bits that are used to control the level of the EHPI Control Bus configured as I/O output pins, and to monitor the level of the EHPI Control Bus configured as I/O input pins. If GPIODIRn = 0, then: GPIODx = 0 Corresponding I/O pin is read as a low. GPIODx = 1 Corresponding I/O pin is read as a high. If GPIODIRn = 1, then: GPIODx = 0 Set corresponding I/O pin to low. GPIODx = 1 Set corresponding I/O pin to high.

3.7 System Register

The system register (SYSR) provides control over certain device-specific functions. The register is located at port address 07FDh.

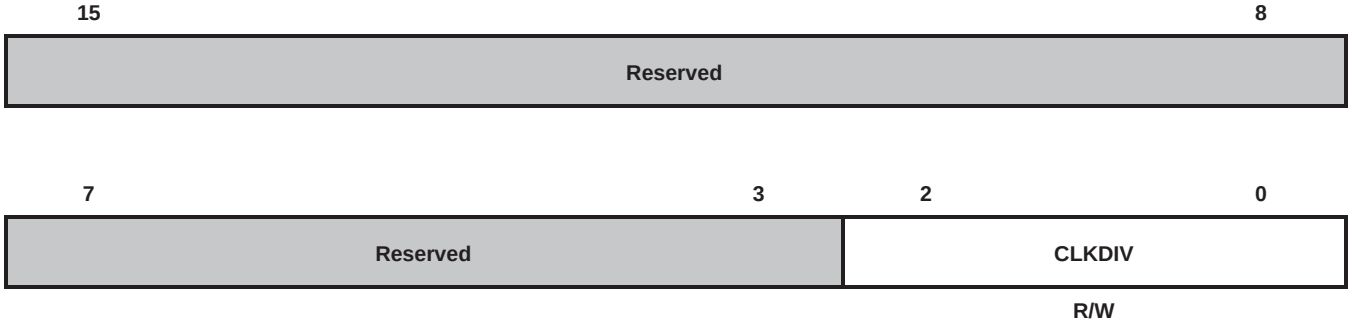

LEGEND: R = Read, W = Write, *n* = value after reset

Figure 3−16. System Register Bit Locations

Table 3−17. System Register Bit Fields

BIT		FUNCTION
NUMBER	NAME	
15−3	Reserved	These bits are reserved and are unaffected by writes.
2−0	CLKDIV	CLKOUT Divide Factor. Allows the clock present on the CLKOUT pin to be a divided-down version of the internal CPU clock. This field does not affect the programming of the PLL. CLKDIV 000 = CLKOUT represents the CPU clock divided by 1 CLKDIV 001 = CLKOUT represents the CPU clock divided by 2 CLKDIV 010 = CLKOUT represents the CPU clock divided by 4 CLKDIV 011 = CLKOUT represents the CPU clock divided by 6 CLKDIV 100 = CLKOUT represents the CPU clock divided by 8 CLKDIV 101 = CLKOUT represents the CPU clock divided by 10 CLKDIV 110 = CLKOUT represents the CPU clock divided by 12 CLKDIV 111 = CLKOUT represents the CPU clock divided by 14

3.8 USB Clock Generation

The USB module can be clocked from either an Analog Phase-Locked Loop (APLL) or a Digital Phase-Locked Loop (DPLL). The APLL is the recommended USB clock source due to better noise tolerance and less long-term jitter than the DPLL. To maintain the backward compatibility, the DPLL is the power-up default clock source for the USB module.

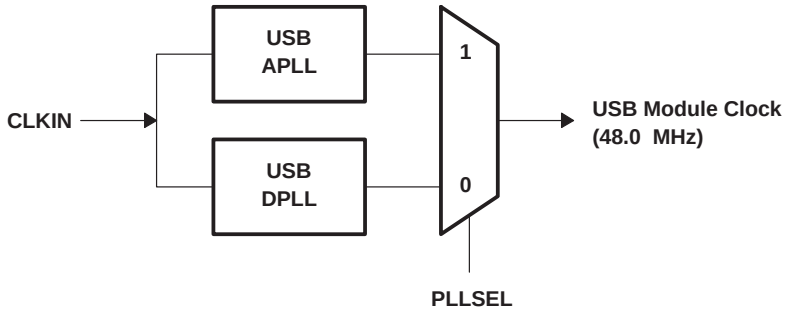

Figure 3−17. USB Clock Generation

15	3	2	1	0
Reserved		DPLLSTAT	APLLSTAT	PLLSEL
R, 0000 0000 0000 0		R, 1	R, 0	R/W, 0

LEGEND: R = Read, W = Write, *n* = value after reset

Figure 3−18. USB PLL Selection and Status Register Bit Layout

Table 3−18. USB PLL Selection and Status Register Bit Functions

BIT NO.	BIT NAME	RESET VALUE	FUNCTION
15−3	Reserved	0	Reserved bits. Always write 0.
2	DPLLSTAT	1	Status bit indicating if the DPLL is the source for the USB module clock. DPLLSTAT = 0 The DPLL is not the USB module clock source. DPLLSTAT = 1 The DPLL is the USB module clock source.
1	APLLSTAT	0	Status bit indicating if the APLL is the source for the USB module clock. APLLSTAT = 0 The APLL is not the USB module clock source. APLLSTAT = 1 The APLL is the USB module clock source.
0	PLLSEL	0	USB module clock source selection bit. PLLSEL = 0 DPLL is selected as USB module clock source. PLLSEL = 1 APLL is selected as USB module clock source.

15	12	11	10	3	2	1	0
MULT		DIV	COUNT		ON	MODE	STAT
R/W, 0000		R/W, 0	R, 0000 0000		R/W, 0	R/W, 0	R, 0

LEGEND: R = Read, W = Write, *n* = value after reset

Figure 3−19. USB APLL Clock Mode Register Bit Layout

Table 3−19. USB APLL Clock Mode Register Bit Functions

BIT NO.	BIT NAME	RESET VALUE	FUNCTION
15−12	MULT	0	PLL Multiply Factor K. Multiply Factor K, combined with DIV and MODE, determines the final PLL output clock frequency. K = MULT[3:0] + 1
11	DIV	0	PLL Divide Factor (D) selection bit for PLL multiply mode operation. DIV, combined with K and MODE, determines the final PLL output clock frequency. When the PLL is operating in multiply mode: DIV = 0 PLL Divide Factor D = 1 DIV = 1 PLL Divide Factor D = 2 if K is odd PLL Divide Factor D = 4 if K is even
10−3	COUNT	0	8-bit counter for PLL lock timer. When the MODE bit is set to 1, the COUNT field starts decrementing by 1 at the rate of CLKIN/16. When COUNT decrements to 0, the STAT bit is set to 1 and the PLL enabled clock is sourced to the USB module.

Table 3−19. USB APLL Clock Mode Register Bit Functions (Continued)

BIT NO.	BIT NAME	RESET VALUE	FUNCTION
2	ON	0	PLL Voltage Controlled Oscillator (VCO) enable bit. This bit works in conjunction with MODE to enable or disable the VCO. **ON MODE VCO** 0 0 OFF 1 X ON X 1 ON X = Don't care
1	MODE	0	PLL mode selection bit MODE = 0 PLL operating in divide mode (VCO bypassed). When the PLL is operating in DIV mode, the PLL Divide Factor (D) is determined by the factor K. D = 2 if K = 1 to 15 D = 4 if K = 16 MODE = 1 PLL operating in multiply mode (VCO on). The PLL multiply and divide factors are determined by DIV and K.
0	STAT	0	PLL lock status bit STAT = 0 PLL operating in DIV mode (VCO bypassed) STAT = 1 PLL operating in multiply mode (VCO on)

DIV, combined with MODE and K, defines the final PLL multiplication ratio M/D as indicated below. The USB APLL clock frequency can be simply expressed by:

$$F_{USB\ APLL\ CLK} = F_{CLKIN} \times (M/D)$$

The multiplication factor M and the dividing factor D are defined in Table 3−20.

Table 3−20. M and D Values Based on MODE, DIV, and K

MODE	DIV	K	M	D
0	X	1 to 15	1	2
0	X	16	1	4
1	0	1 to 15	K	1
1	0	16	1	1
1	1	Odd	K	2
1	1	Even	K − 1	4

The USB clock generation and the PLL switching scheme are discussed in detail in the *TMS320VC5507/5509 DSP Universal Serial Bus (USB) Module Reference Guide* (literature number SPRU596) and in the *Using the USB APLL on the TMS320VC5507/5509A* Application Report (literature number SPRA997).

3.9 Memory-Mapped Registers

The 5509A has 78 memory-mapped CPU registers that are mapped in data memory space address 0h to 4Fh. Table 3−21 provides a list of the CPU memory-mapped registers (MMRs) available. The corresponding TMS320C54x™ (C54x™) CPU registers are also indicated where applicable.

Table 3−21. CPU Memory-Mapped Registers

C55x REGISTER	C54x REGISTER	WORD ADDRESS (HEX)	DESCRIPTION	BIT FIELD
IER0	IMR	00	Interrupt Enable Register 0	[15−0]
IFR0	IFR	01	Interrupt Flag Register 0	[15−0]
ST0_55	−	02	Status Register 0 for C55x	[15−0]
ST1_55	−	03	Status Register 1 for C55x	[15−0]
ST3_55	−	04	Status Register 3 for C55x	[15−0]
−	−	05	Reserved	[15−0]
ST0	ST0	06	Status Register ST0	[15−0]
ST1	ST1	07	Status Register ST1	[15−0]
AC0L	AL	08	Accumulator 0	[15−0]
AC0H	AH	09		[31−16]
AC0G	AG	0A		[39−32]
AC1L	BL	OB	Accumulator 1	[15−0]
AC1H	BH	0C		[31−16]
AC1G	BG	0D		[39−32]
T3	TREG	0E	Temporary Register	[15−0]
TRN0	TRN	0F	Transition Register	[15−0]
AR0	AR0	10	Auxiliary Register 0	[15−0]
AR1	AR1	11	Auxiliary Register 1	[15−0]
AR2	AR2	12	Auxiliary Register 2	[15−0]
AR3	AR3	13	Auxiliary Register 3	[15−0]
AR4	AR4	14	Auxiliary Register 4	[15−0]
AR5	AR5	15	Auxiliary Register 5	[15−0]
AR6	AR6	16	Auxiliary Register 6	[15−0]
AR7	AR7	17	Auxiliary Register 7	[15−0]
SP	SP	18	Stack Pointer Register	[15−0]
BK03	BK	19	Circular Buffer Size Register	[15−0]
BRC0	BRC	1A	Block Repeat Counter	[15−0]
RSA0L	RSA	1B	Block Repeat Start Address	[15−0]
REA0L	REA	1C	Block Repeat End Address	[15−0]
PMST	PMST	1D	Processor Mode Status Register	[15−0]
XPC	XPC	1E	Program Counter Extension Register	[7−0]
−	−	1F	Reserved	[15−0]
T0	−	20	Temporary Data Register 0	[15−0]
T1	−	21	Temporary Data Register 1	[15−0]
T2	−	22	Temporary Data Register 2	[15−0]
T3	−	23	Temporary Data Register 3	[15−0]
AC2L	−	24	Accumulator 2	[15−0]
AC2H	−	25		[31−16]
AC2G	−	26		[39−32]

TMS320C54x and C54x are trademarks of Texas Instruments.

Table 3−21. CPU Memory-Mapped Registers (Continued)

C55x REGISTER	C54x REGISTER	WORD ADDRESS (HEX)	DESCRIPTION	BIT FIELD
CDP	−	27	Coefficient Data Pointer	[15−0]
AC3L	−	28	Accumulator 3	[15−0]
AC3H	−	29		[31−16]
AC3G	−	2A		[39−32]
DPH	−	2B	Extended Data Page Pointer	[6−0]
MDP05	−	2C	Reserved	[6−0]
MDP67	−	2D	Reserved	[6−0]
DP	−	2E	Memory Data Page Start Address	[15−0]
PDP	−	2F	Peripheral Data Page Start Address	[8−0]
BK47	−	30	Circular Buffer Size Register for AR[4−7]	[15−0]
BKC	−	31	Circular Buffer Size Register for CDP	[15−0]
BSA01	−	32	Circular Buffer Start Address Register for AR[0−1]	[15−0]
BSA23	−	33	Circular Buffer Start Address Register for AR[2−3]	[15−0]
BSA45	−	34	Circular Buffer Start Address Register for AR[4−5]	[15−0]
BSA67	−	35	Circular Buffer Start Address Register for AR[6−7]	[15−0]
BSAC	−	36	Circular Buffer Coefficient Start Address Register	[15−0]
BIOS	−	37	Data Page Pointer Storage Location for 128-word Data Table	[15−0]
TRN1	−	38	Transition Register 1	[15−0]
BRC1	−	39	Block Repeat Counter 1	[15−0]
BRS1	−	3A	Block Repeat Save 1	[15−0]
CSR	−	3B	Computed Single Repeat	[15−0]
RSA0H	−	3C	Repeat Start Address 0	[23−16]
RSA0L	−	3D		[15−0]
REA0H	−	3E	Repeat End Address 0	[23−16]
REA0L	−	3F		[15−0]
RSA1H	−	40	Repeat Start Address 1	[23−16]
RSA1L	−	41		[15−0]
REA1H	−	42	Repeat End Address 1	[23−16]
REA1L	−	43		[15−0]
RPTC	−	44	Repeat Counter	[15−0]
IER1	−	45	Interrupt Enable Register 1	[15−0]
IFR1	−	46	Interrupt Flag Register 1	[15−0]
DBIER0	−	47	Debug IER0	[15−0]
DBIER1	−	48	Debug IER1	[15−0]
IVPD	−	49	Interrupt Vector Pointer DSP	[15−0]
IVPH	−	4A	Interrupt Vector Pointer HOST	[15−0]
ST2_55	−	4B	Status Register 2 for C55x	[15−0]
SSP	−	4C	System Stack Pointer	[15−0]
SP	−	4D	User Stack Pointer	[15−0]
SPH	−	4E	Extended Data Page Pointer for the SP and the SSP	[6−0]
CDPH	−	4F	Main Data Page Pointer for the CDP	[6−0]

3.10 Peripheral Register Description

Each 5509A device has a set of memory-mapped registers associated with peripherals as listed in Table 3−22 through Table 3−39. Some registers use less than 16 bits. When reading these registers, unused bits are always read as 0.

NOTE: The CPU access latency to the peripheral memory-mapped registers is 6 CPU cycles. Following peripheral register update(s), the CPU must wait at least 6 CPU cycles before attempting to use that peripheral. When more than one peripheral register is updated in a sequence, the CPU only needs to wait following the final register write. For example, if the EMIF is being reconfigured, the CPU must wait until the very last EMIF register update takes effect before trying to access the external memory. The users should consult the respective peripheral user's guide to determine if a peripheral requires additional time to initialize itself to the new configuration after the register updates take effect.

Before reading or writing to the USB register, the USB module has to be brought out of reset by setting bit 2 of the USB Idle Control and Status Register. Likewise, the MMC/SD must be selected by programming the External Bus Selection Register before reading or writing the MMC/SD module registers.

Table 3−22. Idle Control, Status, and System Registers

WORD ADDRESS	REGISTER NAME	DESCRIPTION	RESET VALUE†
0x0001	ICR[7:0]	Idle Control Register	xxxx xxxx 0000 0000
0x0002	ISTR[7:0]	Idle Status Register	xxxx xxxx 0000 0000
0x07FD	SYSR[15:0]	System Register	0000 0000 0000 0000

† Hardware reset; x denotes a "don't care."

Table 3−23. External Memory Interface Registers

WORD ADDRESS	REGISTER NAME	DESCRIPTION	RESET VALUE†
0x0800	EGCR[15:0]	EMIF Global Control Register	xxxx xxxx 0010 xx00
0x0801	EMI_RST	EMIF Global Reset Register	xxxx xxxx xxxx xxxx
0x0802	EMI_BE[13:0]	EMIF Bus Error Status Register	xx00 0000 0000 0000
0x0803	CE0_1[14:0]	EMIF CE0 Space Control Register 1	x010 1111 1111 1111
0x0804	CE0_2[15:0]	EMIF CE0 Space Control Register 2	0100 1111 1111 1111
0x0805	CE0_3[7:0]	EMIF CE0 Space Control Register 3	xxxx xxxx 0000 0000
0x0806	CE1_1[14:0]	EMIF CE1 Space Control Register 1	x010 1111 1111 1111
0x0807	CE1_2[15:0]	EMIF CE1 Space Control Register 2	0100 1111 1111 1111
0x0808	CE1_3[7:0]	EMIF CE1 Space Control Register 3	xxxx xxxx 0000 0000
0x0809	CE2_1[14:0]	EMIF CE2 Space Control Register 1	x010 1111 1111 1111
0x080A	CE2_2[15:0]	EMIF CE2 Space Control Register 2	0101 1111 1111 1111
0x080B	CE2_3[7:0]	EMIF CE2 Space Control Register 3	xxxx xxxx 0000 0000
0x080C	CE3_1[14:0]	EMIF CE3 Space Control Register 1	x010 1111 1111 1111
0x080D	CE3_2[15:0]	EMIF CE3 Space Control Register 2	0101 1111 1111 1111
0x080E	CE3_3[7:0]	EMIF CE3 Space Control Register 3	xxxx xxxx 0000 0000
0x080F	SDC1[15:0]	EMIF SDRAM Control Register 1	1111 1001 0100 1000
0x0810	SDPER[11:0]	EMIF SDRAM Period Register	xxxx 0000 1000 0000
0x0811	SDCNT[11:0]	EMIF SDRAM Counter Register	xxxx 0000 1000 0000
0x0812	INIT	EMIF SDRAM Init Register	xxxx xxxx xxxx xxxx
0x0813	SDC2[9:0]	EMIF SDRAM Control Register 2	xxxx xx11 1111 1111
0x0814	SDC3	EMIF SDRAM Control Register 3	0000 0000 0000 0111

† Hardware reset; x denotes a "don't care."

Table 3−24. DMA Configuration Registers

PORT ADDRESS (WORD)	REGISTER NAME	DESCRIPTION	RESET VALUE†
GLOBAL REGISTER			
0x0E00	DMA_GCR[2:0]	DMA Global Control Register	xxxx xxxx xxxx x000
0x0E02	DMA_GSCR	DMA Software Compatibility Register	
0x0E03	DMA_GTCR	DMA Timeout Control Register	
CHANNEL #0 REGISTERS			
0x0C00	DMA_CSDP0	DMA Channel 0 Source Destination Parameters Register	0000 0000 0000 0000
0x0C01	DMA_CCR0[15:0]	DMA Channel 0 Control Register	0000 0000 0000 0000
0x0C02	DMA_CICR0[5:0]	DMA Channel 0 Interrupt Control Register	xxxx xxxx xx00 0011
0x0C03	DMA_CSR0[6:0]	DMA Channel 0 Status Register	xxxx xxxx xx00 0000
0x0C04	DMA_CSSA_L0	DMA Channel 0 Source Start Address Register (lower bits)	Undefined
0x0C05	DMA_CSSA_U0	DMA Channel 0 Source Start Address Register (upper bits)	Undefined
0x0C06	DMA_CDSA_L0	DMA Channel 0 Source Destination Address Register (lower bits)	Undefined
0x0C07	DMA_CDSA_U0	DMA Channel 0 Source Destination Address Register (upper bits)	Undefined
0x0C08	DMA_CEN0	DMA Channel 0 Element Number Register	Undefined
0x0C09	DMA_CFN0	DMA Channel 0 Frame Number Register	Undefined
0x0C0A	DMA_CFI0/ DMA_CSFI0‡	DMA Channel 0 Frame Index Register/ DMA Channel 0 Source Frame Index Register‡	Undefined
0x0C0B	DMA_CEI0/ DMA_CSEI0§	DMA Channel 0 Element Index Register/ DMA Channel 0 Source Element Index Register§	Undefined
0x0C0C	DMA_CSAC0	DMA Channel 0 Source Address Counter	Undefined
0x0C0D	DMA_CDAC0	DMA Channel 0 Destination Address Counter	Undefined
0x0C0E	DMA_CDEI0	DMA Channel 0 Destination Element Index Register	Undefined
0x0C0F	DMA_CDFI0	DMA Channel 0 Destination Frame Index Register	Undefined

† Hardware reset: x denotes a “don’t care.”

‡ On the TMS320VC5509, the channel frame index applies to both source and destination and this register behaves as DMA_CFIn. On the TMS320VC5509A, DMA_CSFIn and DMA_CDFIn provide separate source and destination frame indexing. The 5509A can be programmed for software compatibility with the 5509 through the Software Compatibility Register (DMA_GSCR).

§ On the TMS320VC5509, the channel element index applies to both source and destination and this register behaves as DMA_CEIn. On the TMS320VC5509A, DMA_CSEIn and DMA_CDEIn provide separate source and destination frame indexing. The 5509A can be programmed for software compatibility with the 5509 through the Software Compatibility Register (DMA_GSCR).

Table 3−24. DMA Configuration Registers (Continued)

PORT ADDRESS (WORD)	REGISTER NAME	DESCRIPTION	RESET VALUE†
CHANNEL #1 REGISTERS			
0x0C20	DMA_CSDP1	DMA Channel 1 Source Destination Parameters Register	0000 0000 0000 0000
0x0C21	DMA_CCR1[15:0]	DMA Channel 1 Control Register	0000 0000 0000 0000
0x0C22	DMA_CICR1[5:0]	DMA Channel 1 Interrupt Control Register	xxxx xxxx xx00 0011
0x0C23	DMA_CSR1[6:0]	DMA Channel 1 Status Register	xxxx xxxx xx00 0000
0x0C24	DMA_CSSA_L1	DMA Channel 1 Source Start Address Register (lower bits)	Undefined
0x0C25	DMA_CSSA_U1	DMA Channel 1 Source Start Address Register (upper bits)	Undefined
0x0C26	DMA_CDSA_L1	DMA Channel 1 Source Destination Address Register (lower bits)	Undefined
0x0C27	DMA_CDSA_U1	DMA Channel 1 Source Destination Address Register (upper bits)	Undefined
0x0C28	DMA_CEN1	DMA Channel 1 Element Number Register	Undefined
0x0C29	DMA_CFN1	DMA Channel 1 Frame Number Register	Undefined
0x0C2A	DMA_CFI1/ DMA_CSFI1‡	DMA Channel 1 Frame Index Register/ DMA Channel 1 Source Frame Index Register‡	Undefined
0x0C2B	DMA_CEI1/ DMA_CSEI1§	DMA Channel 1 Element Index Register/ DMA Channel 1 Source Element Index Register§	Undefined
0x0C2C	DMA_CSAC1	DMA Channel 1 Source Address Counter	Undefined
0x0C2D	DMA_CDAC1	DMA Channel 1 Destination Address Counter	Undefined
0x0C2E	DMA_CDEI1	DMA Channel 1 Destination Element Index Register	Undefined
0x0C2F	DMA_CDFI1	DMA Channel 1 Destination Frame Index Register	Undefined

† Hardware reset: x denotes a “don’t care.”

‡ On the TMS320VC5509, the channel frame index applies to both source and destination and this register behaves as DMA_CFIn. On the TMS320VC5509A, DMA_CSFIn and DMA_CDFIn provide separate source and destination frame indexing. The 5509A can be programmed for software compatibility with the 5509 through the Software Compatibility Register (DMA_GSCR).

§ On the TMS320VC5509, the channel element index applies to both source and destination and this register behaves as DMA_CEIn. On the TMS320VC5509A, DMA_CSEIn and DMA_CDEIn provide separate source and destination frame indexing. The 5509A can be programmed for software compatibility with the 5509 through the Software Compatibility Register (DMA_GSCR).

Table 3−24. DMA Configuration Registers (Continued)

PORT ADDRESS (WORD)	REGISTER NAME	DESCRIPTION	RESET VALUE†
CHANNEL #2 REGISTERS			
0x0C40	DMA_CSDP2	DMA Channel 2 Source Destination Parameters Register	0000 0000 0000 0000
0x0C41	DMA_CCR2[15:0]	DMA Channel 2 Control Register	0000 0000 0000 0000
0x0C42	DMA_CICR2[5:0]	DMA Channel 2 Interrupt Control Register	xxxx xxxx xx00 0011
0x0C43	DMA_CSR2[6:0]	DMA Channel 2 Status Register	xxxx xxxx xx00 0000
0x0C44	DMA_CSSA_L2	DMA Channel 2 Source Start Address Register (lower bits)	Undefined
0x0C45	DMA_CSSA_U2	DMA Channel 2 Source Start Address Register (upper bits)	Undefined
0x0C46	DMA_CDSA_L2	DMA Channel 2 Source Destination Address Register (lower bits)	Undefined
0x0C47	DMA_CDSA_U2	DMA Channel 2 Source Destination Address Register (upper bits)	Undefined
0x0C48	DMA_CEN2	DMA Channel 2 Element Number Register	Undefined
0x0C49	DMA_CFN2	DMA Channel 2 Frame Number Register	Undefined
0x0C4A	DMA_CFI2/ DMA_CSFI2‡	DMA Channel 2 Frame Index Register/ DMA Channel 2 Source Frame Index Register‡	Undefined
0x0C4B	DMA_CEI2/ DMA_CSEI2§	DMA Channel 2 Element Index Register/ DMA Channel 2 Source Element Index Register§	Undefined
0x0C4C	DMA_CSAC2	DMA Channel 2 Source Address Counter	Undefined
0x0C4D	DMA_CDAC2	DMA Channel 2 Destination Address Counter	Undefined
0x0C4E	DMA_CDEI2	DMA Channel 2 Destination Element Index Register	Undefined
0x0C4F	DMA_CDFI2	DMA Channel 2 Destination Frame Index Register	Undefined

† Hardware reset: x denotes a “don’t care.”

‡ On the TMS320VC5509, the channel frame index applies to both source and destination and this register behaves as DMA_CFIn. On the TMS320VC5509A, DMA_CSFIn and DMA_CDFIn provide separate source and destination frame indexing. The 5509A can be programmed for software compatibility with the 5509 through the Software Compatibility Register (DMA_GSCR).

§ On the TMS320VC5509, the channel element index applies to both source and destination and this register behaves as DMA_CEIn. On the TMS320VC5509A, DMA_CSEIn and DMA_CDEIn provide separate source and destination frame indexing. The 5509A can be programmed for software compatibility with the 5509 through the Software Compatibility Register (DMA_GSCR).

Table 3−24. DMA Configuration Registers (Continued)

PORT ADDRESS (WORD)	REGISTER NAME	DESCRIPTION	RESET VALUE†
CHANNEL #3 REGISTERS			
0x0C60	DMA_CSDP3	DMA Channel 3 Source Destination Parameters Register	0000 0000 0000 0000
0x0C61	DMA_CCR3[15:0]	DMA Channel 3 Control Register	0000 0000 0000 0000
0x0C62	DMA_CICR3[5:0]	DMA Channel 3 Interrupt Control Register	xxxx xxxx xx00 0011
0x0C63	DMA_CSR3[6:0]	DMA Channel 3 Status Register	xxxx xxxx xx00 0000
0x0C64	DMA_CSSA_L3	DMA Channel 3 Source Start Address Register (lower bits)	Undefined
0x0C65	DMA_CSSA_U3	DMA Channel 3 Source Start Address Register (upper bits)	Undefined
0x0C66	DMA_CDSA_L3	DMA Channel 3 Source Destination Address Register (lower bits)	Undefined
0x0C67	DMA_CDSA_U3	DMA Channel 3 Source Destination Address Register (upper bits)	Undefined
0x0C68	DMA_CEN3	DMA Channel 3 Element Number Register	Undefined
0x0C69	DMA_CFN3	DMA Channel 3 Frame Number Register	Undefined
0x0C6A	DMA_CFI3/ DMA_CSFI3‡	DMA Channel 3 Frame Index Register/ DMA Channel 3 Source Frame Index Register‡	Undefined
0x0C6B	DMA_CEI3/ DMA_CSEI3§	DMA Channel 3 Element Index Register/ DMA Channel 3 Source Element Index Register§	Undefined
0x0C6C	DMA_CSAC3	DMA Channel 3 Source Address Counter	Undefined
0x0C6D	DMA_CDAC3	DMA Channel 3 Destination Address Counter	Undefined
0x0C6E	DMA_CDEI3	DMA Channel 3 Destination Element Index Register	Undefined
0x0C6F	DMA_CDFI3	DMA Channel 3 Destination Frame Index Register	Undefined

† Hardware reset: x denotes a “don’t care.”

‡ On the TMS320VC5509, the channel frame index applies to both source and destination and this register behaves as DMA_CFIn. On the TMS320VC5509A, DMA_CSFIn and DMA_CDFIn provide separate source and destination frame indexing. The 5509A can be programmed for software compatibility with the 5509 through the Software Compatibility Register (DMA_GSCR).

§ On the TMS320VC5509, the channel element index applies to both source and destination and this register behaves as DMA_CEIn. On the TMS320VC5509A, DMA_CSEIn and DMA_CDEIn provide separate source and destination frame indexing. The 5509A can be programmed for software compatibility with the 5509 through the Software Compatibility Register (DMA_GSCR).

Table 3−24. DMA Configuration Registers (Continued)

PORT ADDRESS (WORD)	REGISTER NAME	DESCRIPTION	RESET VALUE†
CHANNEL #4 REGISTERS			
0x0C80	DMA_CSDP4	DMA Channel 4 Source Destination Parameters Register	0000 0000 0000 0000
0x0C81	DMA_CCR4[15:0]	DMA Channel 4 Control Register	0000 0000 0000 0000
0x0C82	DMA_CICR4[5:0]	DMA Channel 4 Interrupt Control Register	xxxx xxxx xx00 0011
0x0C83	DMA_CSR4[6:0]	DMA Channel 4 Status Register	xxxx xxxx xx00 0000
0x0C84	DMA_CSSA_L4	DMA Channel 4 Source Start Address Register (lower bits)	Undefined
0x0C85	DMA_CSSA_U4	DMA Channel 4 Source Start Address Register (upper bits)	Undefined
0x0C86	DMA_CDSA_L4	DMA Channel 4 Source Destination Address Register (lower bits)	Undefined
0x0C87	DMA_CDSA_U4	DMA Channel 4 Source Destination Address Register (upper bits)	Undefined
0x0C88	DMA_CEN4	DMA Channel 4 Element Number Register	Undefined
0x0C89	DMA_CFN4	DMA Channel 4 Frame Number Register	Undefined
0x0C8A	DMA_CFI4/ DMA_CSFI4‡	DMA Channel 4 Frame Index Register/ DMA Channel 4 Source Frame Index Register‡	Undefined
0x0C8B	DMA_CEI4/ DMA_CSEI4§	DMA Channel 4 Element Index Register/ DMA Channel 4 Source Element Index Register§	Undefined
0x0C8C	DMA_CSAC4	DMA Channel 4 Source Address Counter	Undefined
0x0C8D	DMA_CDAC4	DMA Channel 4 Destination Address Counter	Undefined
0x0C8E	DMA_CDEI4	DMA Channel 4 Destination Element Index Register	Undefined
0x0C8F	DMA_CDFI4	DMA Channel 4 Destination Frame Index Register	Undefined

† Hardware reset: x denotes a “don’t care.”

‡ On the TMS320VC5509, the channel frame index applies to both source and destination and this register behaves as DMA_CFIn. On the TMS320VC5509A, DMA_CSFIn and DMA_CDFIn provide separate source and destination frame indexing. The 5509A can be programmed for software compatibility with the 5509 through the Software Compatibility Register (DMA_GSCR).

§ On the TMS320VC5509, the channel element index applies to both source and destination and this register behaves as DMA_CEIn. On the TMS320VC5509A, DMA_CSEIn and DMA_CDEIn provide separate source and destination frame indexing. The 5509A can be programmed for software compatibility with the 5509 through the Software Compatibility Register (DMA_GSCR).

Table 3−24. DMA Configuration Registers (Continued)

PORT ADDRESS (WORD)	REGISTER NAME	DESCRIPTION	RESET VALUE†
CHANNEL #5 REGISTERS			
0x0CA0	DMA_CSDP5	DMA Channel 5 Source Destination Parameters Register	0000 0000 0000 0000
0x0CA1	DMA_CCR5[15:0]	DMA Channel 5 Control Register	0000 0000 0000 0000
0x0CA2	DMA_CICR5[5:0]	DMA Channel 5 Interrupt Control Register	xxxx xxxx xx00 0011
0x0CA3	DMA_CSR5[6:0]	DMA Channel 5 Status Register	xxxx xxxx xx00 0000
0x0CA4	DMA_CSSA_L5	DMA Channel 5 Source Start Address Register (lower bits)	Undefined
0x0CA5	DMA_CSSA_U5	DMA Channel 5 Source Start Address Register (upper bits)	Undefined
0x0CA6	DMA_CDSA_L5	DMA Channel 5 Source Destination Address Register (lower bits)	Undefined
0x0CA7	DMA_CDSA_U5	DMA Channel 5 Source Destination Address Register (upper bits)	Undefined
0x0CA8	DMA_CEN5	DMA Channel 5 Element Number Register	Undefined
0x0CA9	DMA_CFN5	DMA Channel 5 Frame Number Register	Undefined
0x0CAA	DMA_CFI5/ DMA_CSFI5‡	DMA Channel 5 Frame Index Register/ DMA Channel 5 Source Frame Index Register‡	Undefined
0x0CAB	DMA_CEI5/ DMA_CSEI5§	DMA Channel 5 Element Index Register/ DMA Channel 5 Source Element Index Register§	Undefined
0x0CAC	DMA_CSAC5	DMA Channel 5 Source Address Counter	Undefined
0x0CAD	DMA_CDAC5	DMA Channel 5 Destination Address Counter	Undefined
0x0CAE	DMA_CDEI5	DMA Channel 5 Destination Element Index Register	Undefined
0x0CAF	DMA_CDFI5	DMA Channel 5 Destination Frame Index Register	Undefined

† Hardware reset: x denotes a “don’t care.”

‡ On the TMS320VC5509, the channel frame index applies to both source and destination and this register behaves as DMA_CFIn. On the TMS320VC5509A, DMA_CSFIn and DMA_CDFIn provide separate source and destination frame indexing. The 5509A can be programmed for software compatibility with the 5509 through the Software Compatibility Register (DMA_GSCR).

§ On the TMS320VC5509, the channel element index applies to both source and destination and this register behaves as DMA_CEIn. On the TMS320VC5509A, DMA_CSEIn and DMA_CDEIn provide separate source and destination frame indexing. The 5509A can be programmed for software compatibility with the 5509 through the Software Compatibility Register (DMA_GSCR).

Table 3−25. Real-Time Clock Registers

WORD ADDRESS	REGISTER NAME	DESCRIPTION	RESET VALUE†
0x1800	RTCSEC	Seconds Register	0000 0000 0000 0000
0x1801	RTCSECA	Seconds Alarm Register	0000 0000 0000 0000
0x1802	RTCMIN	Minutes Register	0000 0000 0000 0000
0x1803	RTCMINA	Minutes Alarm Register	0000 0000 0000 0000
0x1804	RTCHOUR	Hours Register	0000 0000 0000 0000
0x1805	RTCHOURA	Hours Alarm Register	0000 0000 0000 0000
0x1806	RTCDAYW	Day of the Week Register	0000 0000 0000 0000
0x1807	RTCDAYM	Day of the Month (date) Register	0000 0000 0000 0000
0x1808	RTCMONTH	Month Register	0000 0000 0000 0000
0x1809	RTCYEAR	Year Register	0000 0000 0000 0000
0x180A	RTCPINTR	Periodic Interrupt Selection Register	0000 0000 0000 0000
0x180B	RTCINTEN	Interrupt Enable Register	0000 0000 1000 0000
0x180C	RTCINTFL	Interrupt Flag Register	0000 0000 0000 0000
0x180D−0x1BFF		Reserved	

† Hardware reset; x denotes a “don’t care.”

Table 3−26. Clock Generator

WORD ADDRESS	REGISTER NAME	DESCRIPTION	RESET VALUE†
0x1C00	CLKMD[14:0]	Clock Mode Register	0010 0000 0000 0010 DIV1 mode
0x1E00	USBDPLL[14:0]‡	USB DPLL Control Register	If non-USB boot mode: 0010 0000 0000 0110 DIV2 mode
			If USB boot mode: 0010 0010 0001 0011 PLL MULT4 mode
0x1E80	USBPLLSEL[2:0]	USB PLL Selection Register	0000 0000 0000 0100
0x1F00	USBAPLL[15:0]	USB APLL Control Register	0000 0000 0000 0000

† Hardware reset; x denotes a “don’t care.”
‡ DPLL is the power-up default USB clock source.

Table 3−27. Timers

WORD ADDRESS	REGISTER NAME	DESCRIPTION	RESET VALUE†
0x1000	TIM0[15:0]	Timer Count Register, Timer #0	1111 1111 1111 1111
0x1001	PRD0[15:0]	Period Register, Timer #0	1111 1111 1111 1111
0x1002	TCR0[15:0]	Timer Control Register, Timer #0	0000 0000 0001 0000
0x1003	PRSC0[15:0]	Timer Prescaler Register, Timer #0	xxxx 0000 xxxx 0000
0x2400	TIM1[15:0]	Timer Count Register, Timer #1	1111 1111 1111 1111
0x2401	PRD1[15:0]	Period Register, Timer #1	1111 1111 1111 1111
0x2402	TCR1[15:0]	Timer Control Register, Timer #1	0000 0000 0001 0000
0x2403	PRSC1[15:0]	Timer Prescaler Register, Timer #1	xxxx 0000 xxxx 0000

† Hardware reset; x denotes a “don’t care.”

Table 3−28. Multichannel Serial Port #0

PORT ADDRESS (WORD)	REGISTER NAME	DESCRIPTION	RESET VALUE†
0x2800	DRR2_0[15:0]	Data Receive Register 2, McBSP #0	0000 0000 0000 0000
0x2801	DRR1_0[15:0]	Data Receive Register 1, McBSP #0	0000 0000 0000 0000
0x2802	DXR2_0[15:0]	Data Transmit Register 2, McBSP #0	0000 0000 0000 0000
0x2803	DXR1_0[15:0]	Data Transmit Register 1, McBSP #0	0000 0000 0000 0000
0x2804	SPCR2_0[15:0]	Serial Port Control Register 2, McBSP #0	0000 0000 0000 0000
0x2805	SPCR1_0[15:0]	Serial Port Control Register 1, McBSP #0	0000 0000 0000 0000
0x2806	RCR2_0[15:0]	Receive Control Register 2, McBSP #0	0000 0000 0000 0000
0x2807	RCR1_0[15:0]	Receive Control Register 1, McBSP #0	0000 0000 0000 0000
0x2808	XCR2_0[15:0]	Transmit Control Register 2, McBSP #0	0000 0000 0000 0000
0x2809	XCR1_0[15:0]	Transmit Control Register 1, McBSP #0	0000 0000 0000 0000
0x280A	SRGR2_0[15:0]	Sample Rate Generator Register 2, McBSP #0	0020 0000 0000 0000
0x280B	SRGR1_0[15:0]	Sample Rate Generator Register 1, McBSP #0	0000 0000 0000 0001
0x280C	MCR2_0[15:0]	Multichannel Control Register 2, McBSP #0	0000 0000 0000 0000
0x280D	MCR1_0[15:0]	Multichannel Control Register 1, McBSP #0	0000 0000 0000 0000
0x280E	RCERA_0[15:0]	Receive Channel Enable Register Partition A, McBSP #0	0000 0000 0000 0000
0x280F	RCERB_0[15:0]	Receive Channel Enable Register Partition B, McBSP #0	0000 0000 0000 0000
0x2810	XCERA_0[15:0]	Transmit Channel Enable Register Partition A, McBSP #0	0000 0000 0000 0000
0x2811	XCERB_0[15:0]	Transmit Channel Enable Register Partition B, McBSP #0	0000 0000 0000 0000
0x2812	PCR0[15:0]	Pin Control Register, McBSP #0	0000 0000 0000 0000
0x2813	RCERC_0[15:0]	Receive Channel Enable Register Partition C, McBSP #0	0000 0000 0000 0000
0x2814	RCERD_0[15:0]	Receive Channel Enable Register Partition D, McBSP #0	0000 0000 0000 0000
0x2815	XCERC_0[15:0]	Transmit Channel Enable Register Partition C, McBSP #0	0000 0000 0000 0000
0x2816	XCERD_0[15:0]	Transmit Channel Enable Register Partition D, McBSP #0	0000 0000 0000 0000
0x2817	RCERE_0[15:0]	Receive Channel Enable Register Partition E, McBSP #0	0000 0000 0000 0000
0x2818	RCERF_0[15:0]	Receive Channel Enable Register Partition F, McBSP #0	0000 0000 0000 0000
0x2819	XCERE_0[15:0]	Transmit Channel Enable Register Partition E, McBSP #0	0000 0000 0000 0000
0x281A	XCERF_0[15:0]	Transmit Channel Enable Register Partition F, McBSP #0	0000 0000 0000 0000
0x281B	RCERG_0[15:0]	Receive Channel Enable Register Partition G, McBSP #0	0000 0000 0000 0000
0x281C	RCERH_0[15:0]	Receive Channel Enable Register Partition H, McBSP #0	0000 0000 0000 0000
0x281D	XCERG_0[15:0]	Transmit Channel Enable Register Partition G, McBSP #0	0000 0000 0000 0000
0x281E	XCERH_0[15:0]	Transmit Channel Enable Register Partition H, McBSP #0	0000 0000 0000 0000

† Hardware reset; x denotes a “don’t care.”

Table 3−29. Multichannel Serial Port #1

PORT ADDRESS (WORD)	REGISTER NAME	DESCRIPTION	RESET VALUE†
0x2C00	DRR2_1[15:0]	Data Receive Register 2, McBSP #1	0000 0000 0000 0000
0x2C01	DRR1_1[15:0]	Data Receive Register 1, McBSP #1	0000 0000 0000 0000
0x2C02	DXR2_1[15:0]	Data Transmit Register 2, McBSP #1	0000 0000 0000 0000
0x2C03	DXR1_1[15:0]	Data Transmit Register 1, McBSP #1	0000 0000 0000 0000
0x2C04	SPCR2_1[15:0]	Serial Port Control Register 2, McBSP #1	0000 0000 0000 0000
0x2C05	SPCR1_1[15:0]	Serial Port Control Register 1, McBSP #1	0000 0000 0000 0000
0x2C06	RCR2_1[15:0]	Receive Control Register 2, McBSP #1	0000 0000 0000 0000
0x2C07	RCR1_1[15:0]	Receive Control Register 1, McBSP #1	0000 0000 0000 0000
0x2C08	XCR2_1[15:0]	Transmit Control Register 2, McBSP #1	0000 0000 0000 0000
0x2C09	XCR1_1[15:0]	Transmit Control Register 1, McBSP #1	0000 0000 0000 0000
0x2C0A	SRGR2_1[15:0]	Sample Rate Generator Register 2, McBSP #1	0020 0000 0000 0000
0x2C0B	SRGR1_1[15:0]	Sample Rate Generator Register 1, McBSP #1	0000 0000 0000 0001
0x2C0C	MCR2_1[15:0]	Multichannel Control Register 2, McBSP #1	0000 0000 0000 0000
0x2C0D	MCR1_1[15:0]	Multichannel Control Register 1, McBSP #1	0000 0000 0000 0000
0x2C0E	RCERA_1[15:0]	Receive Channel Enable Register Partition A, McBSP #1	0000 0000 0000 0000
0x2C0F	RCERB_1[15:0]	Receive Channel Enable Register Partition B, McBSP #1	0000 0000 0000 0000
0x2C10	XCERA_1[15:0]	Transmit Channel Enable Register Partition A, McBSP #1	0000 0000 0000 0000
0x2C11	XCERB_1[15:0]	Transmit Channel Enable Register Partition B, McBSP #1	0000 0000 0000 0000
0x2C12	PCR1[15:0]	Pin Control Register, McBSP #1	0000 0000 0000 0000
0x2C13	RCERC_1[15:0]	Receive Channel Enable Register Partition C, McBSP #1	0000 0000 0000 0000
0x2C14	RCERD_1[15:0]	Receive Channel Enable Register Partition D, McBSP #1	0000 0000 0000 0000
0x2C15	XCERC_1[15:0]	Transmit Channel Enable Register Partition C, McBSP #1	0000 0000 0000 0000
0x2C16	XCERD_1[15:0]	Transmit Channel Enable Register Partition D, McBSP #1	0000 0000 0000 0000
0x2C17	RCERE_1[15:0]	Receive Channel Enable Register Partition E, McBSP #1	0000 0000 0000 0000
0x2C18	RCERF_1[15:0]	Receive Channel Enable Register Partition F, McBSP #1	0000 0000 0000 0000
0x2C19	XCERE_1[15:0]	Transmit Channel Enable Register Partition E, McBSP #1	0000 0000 0000 0000
0x2C1A	XCERF_1[15:0]	Transmit Channel Enable Register Partition F, McBSP #1	0000 0000 0000 0000
0x2C1B	RCERG_1[15:0]	Receive Channel Enable Register Partition G, McBSP #1	0000 0000 0000 0000
0x2C1C	RCERH_1[15:0]	Receive Channel Enable Register Partition H, McBSP #1	0000 0000 0000 0000
0x2C1D	XCERG_1[15:0]	Transmit Channel Enable Register Partition G, McBSP #1	0000 0000 0000 0000
0x2C1E	XCERH_1[15:0]	Transmit Channel Enable Register Partition H, McBSP #1	0000 0000 0000 0000

† Hardware reset; x denotes a “don’t care.”

Table 3−30. Multichannel Serial Port #2

PORT ADDRESS (WORD)	REGISTER NAME	DESCRIPTION	RESET VALUE†
0x3000	DRR2_2[15:0]	Data Receive Register 2, McBSP #2	0000 0000 0000 0000
0x3001	DRR1_2[15:0]	Data Receive Register 1, McBSP #2	0000 0000 0000 0000
0x3002	DXR2_2[15:0]	Data Transmit Register 2, McBSP #2	0000 0000 0000 0000
0x3003	DXR1_2[15:0]	Data Transmit Register 1, McBSP #2	0000 0000 0000 0000
0x3004	SPCR2_2[15:0]	Serial Port Control Register 2, McBSP #2	0000 0000 0000 0000
0x3005	SPCR1_2[15:0]	Serial Port Control Register 1, McBSP #2	0000 0000 0000 0000
0x3006	RCR2_2[15:0]	Receive Control Register 2, McBSP #2	0000 0000 0000 0000
0x3007	RCR1_2[15:0]	Receive Control Register 1, McBSP #2	0000 0000 0000 0000
0x3008	XCR2_2[15:0]	Transmit Control Register 2, McBSP #2	0000 0000 0000 0000
0x3009	XCR1_2[15:0]	Transmit Control Register 1, McBSP #2	0000 0000 0000 0000
0x300A	SRGR2_2[15:0]	Sample Rate Generator Register 2, McBSP #2	0020 0000 0000 0000
0x300B	SRGR1_2[15:0]	Sample Rate Generator Register 1, McBSP #2	0000 0000 0000 0001
0x300C	MCR2_2[15:0]	Multichannel Control Register 2, McBSP #2	0000 0000 0000 0000
0x300D	MCR1_2[15:0]	Multichannel Control Register 1, McBSP #2	0000 0000 0000 0000
0x300E	RCERA_2[15:0]	Receive Channel Enable Register Partition A, McBSP #2	0000 0000 0000 0000
0x300F	RCERB_2[15:0]	Receive Channel Enable Register Partition B, McBSP #2	0000 0000 0000 0000
0x3010	XCERA_2[15:0]	Transmit Channel Enable Register Partition A, McBSP #2	0000 0000 0000 0000
0x3011	XCERB_2[15:0]	Transmit Channel Enable Register Partition B, McBSP #2	0000 0000 0000 0000
0x3012	PCR2[15:0]	Pin Control Register, McBSP #2	0000 0000 0000 0000
0x3013	RCERC_2[15:0]	Receive Channel Enable Register Partition C, McBSP #2	0000 0000 0000 0000
0x3014	RCERD_2[15:0]	Receive Channel Enable Register Partition D, McBSP #2	0000 0000 0000 0000
0x3015	XCERC_2[15:0]	Transmit Channel Enable Register Partition C, McBSP #2	0000 0000 0000 0000
0x3016	XCERD_2[15:0]	Transmit Channel Enable Register Partition D, McBSP #2	0000 0000 0000 0000
0x3017	RCERE_2[15:0]	Receive Channel Enable Register Partition E, McBSP #2	0000 0000 0000 0000
0x3018	RCERF_2[15:0]	Receive Channel Enable Register Partition F, McBSP #2	0000 0000 0000 0000
0x3019	XCERE_2[15:0]	Transmit Channel Enable Register Partition E, McBSP #2	0000 0000 0000 0000
0x301A	XCERF_2[15:0]	Transmit Channel Enable Register Partition F, McBSP #2	0000 0000 0000 0000
0x301B	RCERG_2[15:0]	Receive Channel Enable Register Partition G, McBSP #2	0000 0000 0000 0000
0x301C	RCERH_2[15:0]	Receive Channel Enable Register Partition H, McBSP #2	0000 0000 0000 0000
0x301D	XCERG_2[15:0]	Transmit Channel Enable Register Partition G, McBSP #2	0000 0000 0000 0000
0x301E	XCERH_2[15:0]	Transmit Channel Enable Register Partition H, McBSP #2	0000 0000 0000 0000

† Hardware reset; x denotes a “don’t care.”

Table 3−31. GPIO

WORD ADDRESS	REGISTER NAME	PIN	DESCRIPTION	RESET VALUE†
0x3400	IODIR[7:0]	GPIO[7:0]	General-purpose I/O Direction Register	0000 0000 0000 0000
0x3401	IODATA[7:0]	GPIO[7:0]	General-purpose I/O Data Register	0000 0000 xxxx xxxx
0x4400	AGPIOEN[15:0]	A[15:0]	Address/GPIO Enable Register	0000 0000 0000 0000
0x4401	AGPIODIR[15:0]	A[15:0]	Address/GPIO Direction Register	0000 0000 0000 0000
0x4402	AGPIODATA[15:0]	A[15:0]	Address/GPIO Data Register	xxxx xxxx xxxx xxxx
0x4403	EHPIGPIOEN[5:0]	GPIO[13:8]	EHPI/GPIO Enable Register	0000 0000 0000 0000
0x4404	EHPIGPIODIR[5:0]	GPIO[13:8]	EHPI/GPIO Direction Register	0000 0000 0000 0000
0x4405	EHPIGPIODATA[5:0]	GPIO[13:8]	EHPI/GPIO Data Register	0000 0000 00xx xxxx

† Hardware reset; x denotes a “don’t care.”

Table 3−32. Device Revision ID

WORD ADDRESS	REGISTER NAME	DESCRIPTION	VALUE‡
0x3803	Rev ID[4:1]	Silicon Revision Identification	Rev. 1.0: xxxx xxxx xxx0 000x Rev. 1.1: xxxx xxxx xxx0 001x

‡ x denotes a “don’t care.”

Table 3−33. I^2C Module Registers

WORD ADDRESS	REGISTER NAME	DESCRIPTION	RESET VALUE†
0x3C00	I2COAR[9:0]§	I^2C Own Address Register	0000 0000 0000 0000
0x3C01	I2CIER	I^2C Interrupt Enable Register	0000 0000 0000 0000
0x3C02	I2CSTR	I^2C Status Register	0000 0001 0000 0000
0x3C03	I2CCLKL[15:0]	I^2C Clock Divider Low Register	0000 0000 0000 0000
0x3C04	I2CCLKH[15:0]	I^2C Clock Divider High Register	0000 0000 0000 0000
0x3C05	I2CCNT[15:0]	I^2C Data Count	0000 0000 0000 0000
0x3C06	I2CDRR[7:0]	I^2C Data Receive Register	0000 0000 0000 0000
0x3C07	I2CSAR[9:0]	I^2C Slave Address Register	0000 0011 1111 1111
0x3C08	I2CDXR[7:0]	I^2C Data Transmit Register	0000 0000 0000 0000
0x3C09	I2CMDR[14:0]	I^2C Mode Register	0000 0000 0000 0000
0x3C0A	I2CISRC	I^2C Interrupt Source Register	0000 0000 0000 0000
0x3C0B	−	Reserved	
0x3C0C	I2CPSC	I^2C Prescaler Register	0000 0000 0000 0000
0x3C0D	−	Reserved	
0x3C0E	−	Reserved	
0x3C0F	I2CMDR2	I^2C Mode Register 2	0000 0000 0000 0000
−	I2CRSR	I^2C Receive Shift Register (not accessible to the CPU)	
−	I2CXSR	I^2C Transmit Shift Register (not accessible to the CPU)	

† Hardware reset; x denotes a “don’t care.”

§ Specifies a unique 5509A I^2C address. This register must be set by the programmer. When this device is used in conjunction with another I^2C master device, the register must be programmed to the I^2C slave address (01011xx) allocated by Philips Semiconductor for the 5509A. The two LSBs are programmable address bits.

NOTE: I^2C protocol compatible, no fail-safe buffer.

Table 3−34. Watchdog Timer Registers

WORD ADDRESS	REGISTER NAME	DESCRIPTION	RESET VALUE†
0x4000	WDTIM[15:0]	WD Timer Counter Register	1111 1111 1111 1111
0x4001	WDPRD[15:0]	WD Timer Period Register	1111 1111 1111 1111
0x4002	WDTCR[13:0]	WD Timer Control Register	0000 0011 1100 1111
0x4003	WDTCR2[15:0]	WD Timer Control Register 2	0001 0000 0000 0000

† Hardware reset; x denotes a “don’t care.”

Table 3−35. MMC/SD1 Module Registers

WORD ADDRESS	REGISTER NAME	DESCRIPTION	RESET VALUE†
0x4800	MMCFCLK[8:0]	MMC Function Clock Control Register	0000 0000 0000 0111
0x4801	MMCCTL[10:0]	MMC Control Register	0000 0000 0000 0000
0x4802	MMCCLK[8:0]	MMC Clock Control Register	0000 0000 0000 1111
0x4803	MMCST0[12:0]	MMC Status Register 0	0000 0001 0000 0000
0x4804	MMCST1[5:0]	MMC Status Register 1	0000 0000 0000 0000
0x4805	MMCIE[12:0]	MMC Interrupt Enable Register	0000 0000 0000 0000
0x4806	MMCTOR[7:0]	MMC Response Time-Out Register	0000 0000 0000 0000
0x4807	MMCTOD[15:0]	MMC Data Read Time-Out Register	0000 0000 0000 0000
0x4808	MMCBLEN[11:0]	MMC Block Length Register	0000 0010 0000 0000
0x4809	MMCNBLK[15:0]	MMC Number of Blocks Register	0000 0000 0000 0000
0x480A	MMCNBLC[15:0]	MMC Number of Blocks Counter Register	0000 0000 0000 0000
0x480B	MMCDRR[15:0]	MMC Data Receive Register	0000 0000 0000 0000
0x480C	MMCDXR[15:0]	MMC Data Transmit Register	0000 0000 0000 0000
0x480D	MMCCMD[15:0]	MMC Command Register	0000 0000 0000 0000
0x480E	MMCARGL[15:0]	MMC Argument Register − Low	0000 0000 0000 0000
0x480F	MMCARGH[15:0]	MMC Argument Register − High	0000 0000 0000 0000
0x4810	MMCRSP0[15:0]	MMC Response Register 0	0000 0000 0000 0000
0x4811	MMCRSP1[15:0]	MMC Response Register 1	0000 0000 0000 0000
0x4812	MMCRSP2[15:0]	MMC Response Register 2	0000 0000 0000 0000
0x4813	MMCRSP3[15:0]	MMC Response Register 3	0000 0000 0000 0000
0x4814	MMCRSP4[15:0]	MMC Response Register 4	0000 0000 0000 0000
0x4815	MMCRSP5[15:0]	MMC Response Register 5	0000 0000 0000 0000
0x4816	MMCRSP6[15:0]	MMC Response Register 6	0000 0000 0000 0000
0x4817	MMCRSP7[15:0]	MMC Response Register 7	0000 0000 0000 0000
0x4818	MMCDRSP[7:0]	MMC Data Response Register	0000 0000 0000 0000
0x4819	Reserved		
0x481A	MMCCIDX[7:0]	MMC Command Index Register	0000 0000 0000 0000

† Hardware reset; x denotes a “don’t care.”

NOTE: The MMC/SD module must be selected in the External Bus Selection Register before any MMC/SD module register read or write attempt.

Table 3−36. MMC/SD2 Module Registers

WORD ADDRESS	REGISTER NAME	DESCRIPTION	RESET VALUE†
0x4C00	MMCFCLK[8:0]	MMC Function Clock Control Register	0000 0000 0000 0111
0x4C01	MMCCTL[10:0]	MMC Control Register	0000 0000 0000 0000
0x4C02	MMCCLK[8:0]	MMC Clock Control Register	0000 0000 0000 1111
0x4C03	MMCST0[12:0]	MMC Status Register 0	0000 0001 0000 0000
0x4C04	MMCST1[5:0]	MMC Status Register 1	0000 0000 0000 0000
0x4C05	MMCIE[12:0]	MMC Interrupt Enable Register	0000 0000 0000 0000
0x4C06	MMCTOR[7:0]	MMC Response Time-Out Register	0000 0000 0000 0000
0x4C07	MMCTOD[15:0]	MMC Data Read Time-Out Register	0000 0000 0000 0000
0x4C08	MMCBLEN[11:0]	MMC Block Length Register	0000 0010 0000 0000
0x4C09	MMCNBLK[15:0]	MMC Number of Blocks Register	0000 0000 0000 0000
0x4C0A	MMCNBLC[15:0]	MMC Number of Blocks Counter Register	0000 0000 0000 0000
0x4C0B	MMCDRR[15:0]	MMC Data Receive Register	0000 0000 0000 0000
0x4C0C	MMCDXR[15:0]	MMC Data Transmit Register	0000 0000 0000 0000
0x4C0D	MMCCMD[15:0]	MMC Command Register	0000 0000 0000 0000
0x4C0E	MMCARGL[15:0]	MMC Argument Register − Low	0000 0000 0000 0000
0x4C0F	MMCARGH[15:0]	MMC Argument Register − High	0000 0000 0000 0000
0x4C10	MMCRSP0[15:0]	MMC Response Register 0	0000 0000 0000 0000
0x4C11	MMCRSP1[15:0]	MMC Response Register 1	0000 0000 0000 0000
0x4C12	MMCRSP2[15:0]	MMC Response Register 2	0000 0000 0000 0000
0x4C13	MMCRSP3[15:0]	MMC Response Register 3	0000 0000 0000 0000
0x4C14	MMCRSP4[15:0]	MMC Response Register 4	0000 0000 0000 0000
0x4C15	MMCRSP5[15:0]	MMC Response Register 5	0000 0000 0000 0000
0x4C16	MMCRSP6[15:0]	MMC Response Register 6	0000 0000 0000 0000
0x4C17	MMCRSP7[15:0]	MMC Response Register 7	0000 0000 0000 0000
0x4C18	MMCDRSP[7:0]	MMC Data Response Register	0000 0000 0000 0000
0x4C19	Reserved		
0x4C1A	MMCCIDX[7:0]	MMC Command Index Register	0000 0000 0000 0000

† Hardware reset; x denotes a “don’t care.”

NOTE: The MMC/SD module must be selected in the External Bus Selection Register before any MMC/SD module register read or write attempt.

Table 3−37. USB Module Registers

WORD ADDRESS	REGISTER NAME	DESCRIPTION	RESET VALUE†
DMA CONTEXTS			
0x5800	Reserved		
0x5808	DMAC_O1	Output Endpoint 1 DMA Context Register	Undefined
0x5810	DMAC_O2	Output Endpoint 2 DMA Context Register	Undefined
0x5818	DMAC_O3	Output Endpoint 3 DMA Context Register	Undefined
0x5820	DMAC_O4	Output Endpoint 4 DMA Context Register	Undefined
0x5828	DMAC_O5	Output Endpoint 5 DMA Context Register	Undefined
0x5830	DMAC_O6	Output Endpoint 6 DMA Context Register	Undefined
0x5838	DMAC_O7	Output Endpoint 7 DMA Context Register	Undefined
0x5840	Reserved		
0x5848	DMAC_I1	Input Endpoint 1 DMA Context Register	Undefined
0x5850	DMAC_I2	Input Endpoint 2 DMA Context Register	Undefined
0x5858	DMAC_I3	Input Endpoint 3 DMA Context Register	Undefined
0x5860	DMAC_I4	Input Endpoint 4 DMA Context Register	Undefined
0x5868	DMAC_I5	Input Endpoint 5 DMA Context Register	Undefined
0x5870	DMAC_I6	Input Endpoint 6 DMA Context Register	Undefined
0x5878	DMAC_I7	Input Endpoint 7 DMA Context Register	Undefined
DATA BUFFER			
0x5880	Data Buffers	Contains X/Y data buffers for endpoints 1 – 7	Undefined
0x6680	OEB_0	Output Endpoint 0 Buffer	Undefined
0x66C0	IEB_0	Input Endpoint 0 Buffer	Undefined
0x6700	SUP_0	Setup Packet for Endpoint 0	Undefined
ENDPOINT DESCRIPTOR BLOCKS			
0x6708	OEDB_1	Output Endpoint 1 Descriptor Register Block	Undefined
0x6710	OEDB_2	Output Endpoint 2 Descriptor Register Block	Undefined
0x6718	OEDB_3	Output Endpoint 3 Descriptor Register Block	Undefined
0x6720	OEDB_4	Output Endpoint 4 Descriptor Register Block	Undefined
0x6728	OEDB_5	Output Endpoint 5 Descriptor Register Block	Undefined
0x6730	OEDB_6	Output Endpoint 6 Descriptor Register Block	Undefined
0x6738	OEDB_7	Output Endpoint 7 Descriptor Register Block	Undefined
0x6740	Reserved		
0x6748	IEDB_1	Input Endpoint 1 Descriptor Register Block	Undefined
0x6750	IEDB_2	Input Endpoint 2 Descriptor Register Block	Undefined
0x6758	IEDB_3	Input Endpoint 3 Descriptor Register Block	Undefined
0x6760	IEDB_4	Input Endpoint 4 Descriptor Register Block	Undefined
0x6768	IEDB_5	Input Endpoint 5 Descriptor Register Block	Undefined
0x6770	IEDB_6	Input Endpoint 6 Descriptor Register Block	Undefined
0x6778	IEDB_7	Input Endpoint 7 Descriptor Register Block	Undefined

† Hardware reset; x denotes a “don’t care.”

NOTE: The USB module must be brought out of reset by setting bit 2 of the USB Idle Control and Status Register before any USB module register read or write attempt.

Table 3−37. USB Module Registers (Continued)

WORD ADDRESS	REGISTER NAME	DESCRIPTION	RESET VALUE†
CONTROL AND STATUS REGISTERS			
0x6780	IEPCNF_0	Input Endpoint 0 Configuration	xxxx xxxx 0000 0000
0x6781	IEPBCNT_0	Input Endpoint 0 Byte Count	xxxx xxxx 1000 0000
0x6782	OEPCNF_0	Output Endpoint 0 Configuration	xxxx xxxx 0000 0000
0x6783	OEPBCNT_0	Output Endpoint 0 Byte Count	xxxx xxxx 0000 0000
0x6784 − 0x6790	Reserved		
0x6791	GLOBCTL	Global Control Register	xxxx xxxx 0000 0000
0x6792	VECINT	Vector Interrupt Register	xxxx xxxx 0000 0000
0x6793	IEPINT	Input Endpoint Interrupt Register	xxxx xxxx 0000 0000
0x6794	OEPINT	Output Endpoint Interrupt Register	xxxx xxxx 0000 0000
0x6795	IDMARINT	Input DMA Reload Interrupt Register	xxxx xxxx 0000 0000
0x6796	ODMARINT	Output DMA Reload Interrupt Register	xxxx xxxx 0000 0000
0x6797	IDMAGINT	Input DMA Go Interrupt Register	xxxx xxxx 0000 0000
0x6798	ODMAGINT	Output DMA Go Interrupt Register	xxxx xxxx 0000 0000
0x6799	IDMAMSK	Input DMA Interrupt Mask Register	xxxx xxxx 0000 0000
0x679A	ODMAMSK	Output DMA Interrupt Mask Register	xxxx xxxx 0000 0000
0x679B	IEDBMSK	Input EDB Interrupt Mask Register	xxxx xxxx 0000 0000
0x679C	OEDBMSK	Output EDB Interrupt Mask Register	xxxx xxxx 0000 0000
0x67F8	FNUML	Frame Number Low Register	xxxx xxxx 0000 0000
0x67F9	FNUMH	Frame Number High	xxxx xxxx xxxx x000
0x67FA	PSOFTMR	PreSOF Interrupt Timer Register	xxxx xxxx 0000 0000
0x67FC	USBCTL	USB Control Register	xxxx xxxx 0101 0000
0x67FD	USBMSK	USB Interrupt Mask Register	xxxx xxxx 0000 0000
0x67FE	USBSTA	USB Status Register	xxxx xxxx 0000 0000
0x67FF	FUNADR	Function Address Register	xxxx xxxx x000 0000
0x7000	USBIDLECTL	USB Idle Control and Status Register	xxxx xxxx xxxx x000

† Hardware reset; x denotes a “don’t care.”

NOTE: The USB module must be brought out of reset by setting bit 2 of the USB Idle Control and Status Register before any USB module register read or write attempt.

Table 3−38. Analog-to-Digital Controller (ADC) Registers

WORD ADDRESS	REGISTER NAME	DESCRIPTION	RESET VALUE†
0x6800	ADCCTL[15:11]	ADC Control Register	0111 0000 0000 0000
0x6801	ADCDATA[15:0]	ADC Data Register	0111 0000 0000 0000
0x6802	ADCCLKDIV[15:0]	ADC Function Clock Divider Register	0000 0000 0000 1111
0x6803	ADCCLKCTL[8:0]	ADC Clock Control Register	0000 0000 0000 0111

† Hardware reset; x denotes a “don’t care.”

Table 3−39. External Bus Selection Register

WORD ADDRESS	REGISTER NAME	DESCRIPTION	RESET VALUE†
0x6C00	EBSR[15:0]	External Bus Selection Register	0000 0000 0000 0011‡

† Hardware reset; x denotes a “don’t care.”
‡ The reset value is 0000 0000 0000 0001 if GPIO0 = 1; the value is 0000 0000 0000 0011 if GPIO0 = 0.

3.11 Interrupts

Vector-relative locations and priorities for all internal and external interrupts are shown in Table 3−40.

Table 3−40. Interrupt Table

NAME	SOFTWARE (TRAP) EQUIVALENT	RELATIVE LOCATION† (HEX BYTES)	PRIORITY	FUNCTION
RESET	SINT0	0	0	Reset (hardware and software)
NMI‡	SINT1	8	1	Nonmaskable interrupt
BERR	SINT24	C0	2	Bus Error interrupt
INT0	SINT2	10	3	External interrupt #0
INT1	SINT16	80	4	External interrupt #1
INT2	SINT3	18	5	External interrupt #2
TINT0	SINT4	20	6	Timer #0 interrupt
RINT0	SINT5	28	7	McBSP #0 receive interrupt
XINT0	SINT17	88	8	McBSP #0 transmit interrupt
RINT1	SINT6	30	9	McBSP #1 receive interrupt
XINT1/MMCSD1	SINT7	38	10	McBSP #1 transmit interrupt, MMC/SD #1 interrupt
USB	SINT8	40	11	USB interrupt
DMAC0	SINT18	90	12	DMA Channel #0 interrupt
DMAC1	SINT9	48	13	DMA Channel #1 interrupt
DSPINT	SINT10	50	14	Interrupt from host
INT3/WDTINT	SINT11	58	15	External interrupt #3 or Watchdog timer interrupt
INT4/RTC§	SINT19	98	16	External interrupt #4 or RTC interrupt
RINT2	SINT12	60	17	McBSP #2 receive interrupt
XINT2/MMCSD2	SINT13	68	18	McBSP #2 transmit interrupt , MMC/SD #2 interrupt
DMAC2	SINT20	A0	19	DMA Channel #2 interrupt
DMAC3	SINT21	A8	20	DMA Channel #3 interrupt
DMAC4	SINT14	70	21	DMA Channel #4 interrupt
DMAC5	SINT15	78	22	DMA Channel #5 interrupt
TINT1	SINT22	B0	23	Timer #1 interrupt
IIC	SINT23	B8	24	I^2C interrupt
DLOG	SINT25	C8	25	Data Log interrupt
RTOS	SINT26	D0	26	Real-time Operating System interrupt
−	SINT27	D8	27	Software interrupt #27
−	SINT28	E0	28	Software interrupt #28
−	SINT29	E8	29	Software interrupt #29
−	SINT30	F0	30	Software interrupt #30
−	SINT31	F8	31	Software interrupt #31

† Absolute addresses of the interrupt vector locations are determined by the contents of the IVPD and IVPH registers. Interrupt vectors for interrupts 0−15 and 24−31 are relative to IVPD. Interrupt vectors for interrupts 16−23 are relative to IVPH.

‡ The NMI pin is internally tied high. However, NMI interrupt vector can be used for SINT1 and Watchdog Timer Interrupt.

§ It is recommended that either the INT4 or RTC interrupt be used. If both INT4 and RTC interrupts are used, one interrupt event can potentially hold off the other interrupt. For example, if INT4 is asserted first and held low, the RTC interrupt will not be recognized until the INT4 pin is back to high-logic state again. The INT4 pin must be pulled high if only the RTC interrupt is used.

3.11.1 IFR and IER Registers

The IFR0 (Interrupt Flag Register 0) and IER0 (Interrupt Enable Register 0) bit layouts are shown in Figure 3−20.

NOTE: Some of the interrupts are shared between multiple interrupt sources. All sources for a particular bit are internally combined using a logic OR function so that no additional user configuration is required to select the interrupt source. In the case of the serial port, the shared functions are mutually exclusive so that only one of the interrupt sources will be active at a time in a given system. For example: It is not possible to use McBSP2 and MMC/SD2 simultaneously. However, in the case of INT3/WDTINT it is possible to have active interrupts simultaneously from both the external INT3 source and the watchdog timer. When an interrupt is detected in this bit, the watchdog timer status register should be polled to determine if the watchdog timer is the interrupt source.

15	14	13	12	11	10	9	8
DMAC5	DMAC4	XINT2/ MMCSD2	RINT2	INT3/ WDTINT	DSPINT	DMAC1	USB
R/W−0	R/W−0	R/W−0	R/W−0	R/W−0	R/W−0	R/W−0	R/W−0

7	6	5	4	3	2	1	0
XINT1/ MMCSD1	RINT1	RINT0	TINT0	INT2	INT0	Reserved	
R/W−0	R/W−0	R/W−0	R/W−0	R/W−0	R/W−0	R/W−00	

LEGEND: R = Read, W = Write, *n* = value after reset

Figure 3−20. IFR0 and IER0 Bit Locations

Table 3−41. IFR0 and IER0 Register Bit Fields

BIT		FUNCTION
NUMBER	NAME	
15	DMAC5	DMA channel 5 interrupt flag/mask bit
14	DMAC4	DMA channel 4 interrupt flag/mask bit
13	XINT2/MMCSD2	This bit is used as either the McBSP2 transmit interrupt flag/mask bit, the MMC/SD2 interrupt flag/mask bit.
12	RINT2	McBSP2 receive interrupt flag/mask bit.
11	INT3/WDTINT	This bit is used as either the external user interrupt 3 flag/mask bit, or the watchdog timer interrupt flag/mask bit.
10	DSPINT	HPI host-to-DSP interrupt flag/mask.
9	DMAC1	DMA channel 1 interrupt flag/mask bit
8	USB	USB interrupt flag/mask bit.
7	XINT1/MMCSD1	This bit is used as either the McBSP1 transmit interrupt flag/mask bit, the MMC/SD1 interrupt flag/mask bit.
6	RINT1	McBSP1 receive interrupt flag/mask bit.
5	RINT0	McBSP0 receive interrupt flag bit
4	TINT0	Timer 0 interrupt flag bit
3	INT2	External interrupt 2 flag bit
2	INT0	External interrupt 0 flag bit
1−0	−	Reserved for future expansion. These bits should always be written with 0.

The IFR1 (Interrupt Flag Register 1) and IER1 (Interrupt Enable Register 1) bit layouts are shown in Figure 3−21.

NOTE: It is possible to have active interrupts simultaneously from both the external interrupt 4 (INT4) and the real-time clock (RTC). When an interrupt is detected in this bit, the real-time clock status register should be polled to determine if the real-time clock is the source of the interrupt.

15					11	10	9	8
Reserved						RTOS	DLOG	BERR
R/W−00000†						R/W−0	R/W−0	R/W−0

7	6	5	4	3	2	1	0
I2C	TINT1	DMAC3	DMAC2	INT4/RTC	DMAC0	XINT0	INT1
R/W−0	R/W−0	R/W−0	R/W−0	R/W−0	R/W−0	R/W−0	R/W−0

LEGEND: R = Read, W = Write, *n* = value after reset
† Always write zeros.

Figure 3−21. IFR1 and IER1 Bit Locations

Table 3−42. IFR1 and IER1 Register Bit Fields

BIT		FUNCTION
NUMBER	NAME	
15−11	–	Reserved for future expansion. These bits should always be written with 0.
10	RTOS	Real-time operating system interrupt flag/mask bit
9	DLOG	Data log interrupt flag/mask bit
8	BERR	Bus error interrupt flag/mask bit
7	I2C	I2C interrupt flag/mask bit
6	TINT1	Timer 1 interrupt flag/mask bit
5	DMAC3	DMA channel 3 interrupt flag/mask bit
4	DMAC2	DMA channel 2 interrupt flag/mask bit
3	INT4/RTC	This bit can be used as either the external user interrupt 4 flag/mask bit, or the real-time clock interrupt flag/mask bit.
2	DMAC0	DMA channel 0 interrupt flag/mask bit
1	XINT0	McBSP transmit 0 interrupt flag/mask bit
0	INT1	External user interrupt 1 flag/mask bit

3.11.2 Interrupt Timing

The external interrupts ($\overline{\text{INT}}$[4:0]) are synchronized to the CPU by way of a two-flip-flop synchronizer. The interrupt inputs are sampled on falling edges of the CPU clock. A sequence of 1-1-0-0-0 on consecutive cycles on the interrupt pin is required for an interrupt to be detected. Therefore, the minimum low pulse duration on the external interrupts on the 5509A is three CPU clock periods.

3.11.3 Waking Up From IDLE Condition

One of the following four events can wake up the CPU from IDLE:

- Hardware Reset
- External Interrupt
- RTC Interrupt
- USB Event (Reset or Resume)

3.11.3.1 Waking Up From IDLE With Oscillator Disabled

With an external interrupt, a RTC interrupt, or an USB resume/reset, the clock generation circuit wakes up the oscillator and enables the USB PLL to determine the oscillator stable time. In the case of the interrupt being disabled by clearing the associated bit in the Interrupt Enable Register (IERx), the CPU is not “woken up”. If the interrupt due to the wake-up event is enabled, the interrupt is sent to the CPU only after the oscillator is stabilized and the USB PLL is locked. If the external interrupt serves as the wake-up event, the interrupt line must stay low for a minimum of 3 CPU cycles after the oscillator is stabilized to wake up the CPU. Otherwise, only the clock domain will wake up and another external interrupt will be needed to wake up the CPU.

Once out of IDLE, any system not using the USB should put the USB module in idle mode to reduce power consumption.

For more details on the TMS320VC5509A oscillator-disable process, see the *Disabling the Internal Oscillator on the TMS320VC5507/5509/5509A DSP* Application Report (literature number SPRA078).

3.11.4 Idling Clock Domain When External Parallel Bus Operating in EHPI Mode

The clock domain cannot be idled when the External Parallel Bus is operating in EHPI mode to ensure host access to the DSP memory. To work around this restriction, use the HIDL bit of the External Bus Selection Register (EBSR) with the CLKGENI bit of the Idle Control Register (ICR) to idle the clock domain.

4 Support

4.1 Notices Concerning JTAG (IEEE 1149.1) Boundary Scan Test Capability

4.1.1 Initialization Requirements for Boundary Scan Test

The TMS320VC5509A uses the JTAG port for boundary scan tests, emulation capability and factory test purposes. To use boundary scan test, the EMU0 and EMU1/$\overline{\text{OFF}}$ pins must be held LOW through a rising edge of the $\overline{\text{TRST}}$ signal prior to the first scan. This operation selects the appropriate TAP control for boundary scan. If at any time during a boundary scan test a rising edge of $\overline{\text{TRST}}$ occurs when EMU0 or EMU1/$\overline{\text{OFF}}$ are not low, a factory test mode may be selected preventing boundary scan test from being completed. For this reason, it is recommended that EMU0 and EMU1/$\overline{\text{OFF}}$ be pulled or driven low at all times during boundary scan test.

4.1.2 Boundary Scan Description Language (BSDL) Model

BSDL models are available on the web in the TMS320VC5509A product folder under the “simulation models” section.

4.2 Documentation Support

Extensive documentation supports all TMS320™ DSP family of devices from product announcement through applications development. The following types of documentation are available to support the design and use of the TMS320C5000™ platform of DSPs:

- *TMS320C55x™ DSP Functional Overview* (literature number SPRU312)
- Device-specific data sheets and data manuals
- Complete user’s guides
- Development support tools
- Hardware and software application reports

TMS320C55x reference documentation includes, but is not limited to, the following:

- *TMS320C55x DSP CPU Reference Guide* (literature number SPRU371)
- *TMS320C55x DSP Mnemonic Instruction Set Reference Guide* (literature number SPRU374)
- *TMS320C55x DSP Algebraic Instruction Set Reference Guide* (literature number SPRU375)
- *TMS320C55x DSP Programmer’s Guide* (literature number SPRU376)
- *TMS320C55x DSP Peripherals Overview Reference Guide* (literature number SPRU317)
- *TMS320C55x Optimizing C/C++ Compiler User’s Guide* (literature number SPRU281)
- *TMS320C55x Assembly Language Tools User’s Guide* (literature number SPRU280)
- *TMS320C55x DSP Library Programmer’s Reference* (literature number SPRU422)
- *TMS320VC5507/5509 DSP Universal Serial Bus (USB) Module Reference Guide* (literature number SPRU596)
- *TMS320C55x Hardware Extensions for Image/Video Applications Programmer’s Reference* (literature number SPRU098)
- *TMS320C55x Image/Video Processing Library Programmer’s Reference* (literature number SPRU037)
- *Using the USB APLL on the TMS320VC5507/5509A* Application Report (literature number SPRA997)
- *Disabling the Internal Oscillator on the TMS320VC5507/5509/5509A DSP* Application Report (literature number SPRA078)
- *Using the TMS320VC5503/VC5507/VC5509/VC5509A Bootloader* Application Report (literature number SPRA375)
- *TMS320VC5509A Power Consumption Summary* Application Report (literature number SPRAA04)
- *TMS320VC5509A Digital Signal Processor Silicon Errata* (literature number SPRZ200)

TMS320 and TMS320C5000 are trademarks of Texas Instruments.

The reference guides describe in detail the TMS320C55x™ DSP products currently available and the hardware and software applications, including algorithms, for fixed-point TMS320™ DSP family of devices.

A series of DSP textbooks is published by Prentice-Hall and John Wiley & Sons to support digital signal processing research and education. The TMS320™ DSP newsletter, *Details on Signal Processing*, is published quarterly and distributed to update TMS320™ DSP customers on product information.

Information regarding TI DSP products is also available on the Worldwide Web at *http://www.ti.com* uniform resource locator (URL).

4.3 Device and Development-Support Tool Nomenclature

To designate the stages in the product development cycle, TI assigns prefixes to the part numbers of all DSP devices and support tools. Each DSP commercial family member has one of three prefixes: TMX, TMP, or TMS (e.g., **TMS**320VC5509AGHH). Texas Instruments recommends two of three possible prefix designators for its support tools: TMDX and TMDS. These prefixes represent evolutionary stages of product development from engineering prototypes (TMX/TMDX) through fully qualified production devices/tools (TMS/TMDS).

Device development evolutionary flow:

TMX Experimental device that is not necessarily representative of the final device's electrical specifications

TMP Final silicon die that conforms to the device's electrical specifications but has not completed quality and reliability verification

TMS Fully qualified production device

Support tool development evolutionary flow:

TMDX Development-support product that has not yet completed Texas Instruments internal qualification testing.

TMDS Fully qualified development-support product

TMX and TMP devices and TMDX development-support tools are shipped against the following disclaimer:

"Developmental product is intended for internal evaluation purposes."

TMS devices and TMDS development-support tools have been characterized fully, and the quality and reliability of the device have been demonstrated fully. TI's standard warranty applies.

Predictions show that prototype devices (TMX or TMP) have a greater failure rate than the standard production devices. Texas Instruments recommends that these devices not be used in any production system because their expected end-use failure rate still is undefined. Only qualified production devices are to be used.

4.4 TMS320VC5509A Device Nomenclature

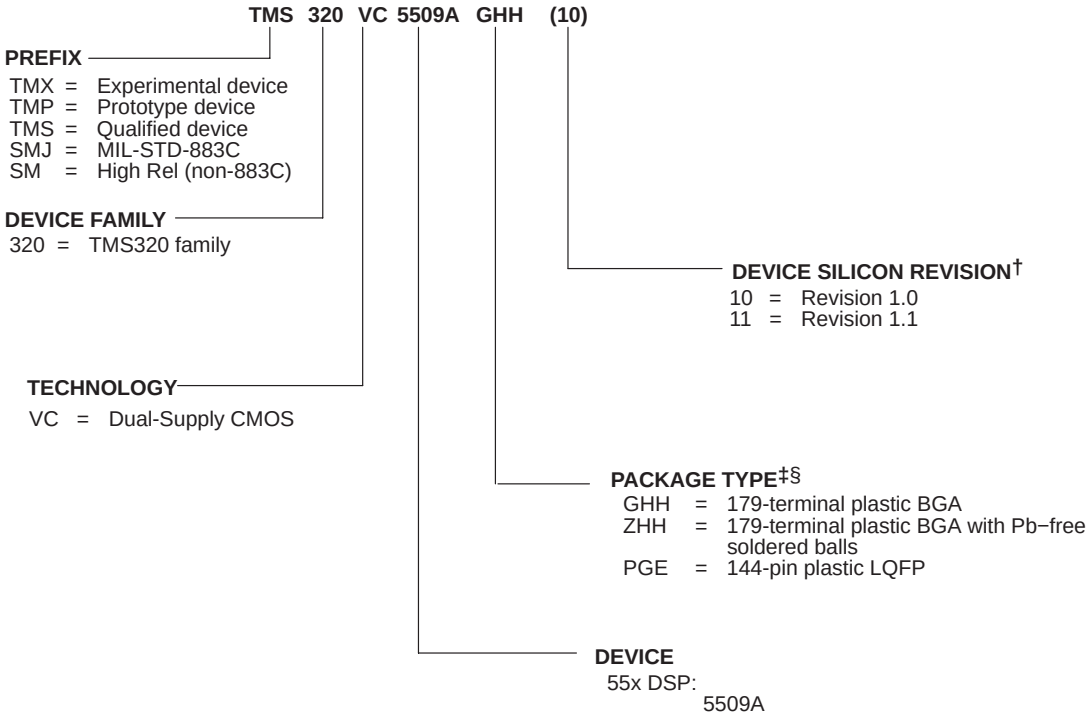

† No silicon revision marked on the package indicates earlier (TMX or TMP) silicon. See the *TMS320VC5509A Digital Signal Processor Silicon Errata* (literature number SPRZ200) to identify TMX or TMP silicon revision.

‡ BGA = Ball Grid Array
LQFP = Low-Profile Quad Flatpack

§ The ZHH package designator represents the version of the GHH with Pb−free soldered balls. The ZHH package devices are supported in the same speed grades as the GHH package devices (*available upon request*).

Figure 4−1. Device Nomenclature for the TMS320VC5509A

5 Electrical Specifications

This section provides the absolute maximum ratings and the recommended operating conditions for the TMS320VC5509A DSP.

All electrical and switching characteristics in this data manual are valid over the recommended operating conditions unless otherwise specified.

5.1 Absolute Maximum Ratings

The list of absolute maximum ratings are specified over operating case temperature. Stresses beyond those listed under “absolute maximum ratings” may cause permanent damage to the device. These are stress ratings only, and functional operation of the device at these or any other conditions beyond those indicated under Section 5.2 is not implied. Exposure to absolute-maximum-rated conditions for extended periods may affect device reliability. All voltage values are with respect to V_{SS}. Figure 5−1 provides the test load circuit values for a 3.3-V I/O.

Supply voltage I/O range, DV_{DD} . . . . . − 0.3 V to 4.0 V
Supply voltage core range, CV_{DD} . . . . . − 0.3 V to 2.0 V
Input voltage range, V_I . . . . . − 0.3 V to 4.5 V
Output voltage range, V_O . . . . . − 0.3 V to 4.5 V
Operating case temperature range, T_C . . . . . − 40°C to 85°C
Storage temperature range T_{stg} . . . . . − 55°C to 150°C

5.2 Recommended Operating Conditions

5.2.1 Recommended Operating Conditions for CV_{DD} = 1.2 V (108 MHz)

			MIN	NOM	MAX	UNIT
Core						
CV_{DD}	Device supply voltage		1.14	1.2	1.26	V
Peripherals						
RCV_{DD}	RTC module supply voltage, core		1.14	1.2	1.26	V
RDV_{DD}	RTC module supply voltage, I/O (RTCINX1 and RTCINX2)		1.14	1.2	1.26	V
$USBPLLV_{DD}$	USBPLL supply voltage†		1.14	1.2	1.26	V
$USBV_{DD}$	USB module supply voltage, I/O (DP, DN, and PU)		3	3.3	3.6	V
DV_{DD}	Device supply voltage, I/O (except DP, DN, PU, SDA, SCL)‡		2.7	3.3	3.6	V
ADV_{DD}	A/D module digital supply voltage		2.7	3.3	3.6	V
AV_{DD}	A/D module analog supply voltage		2.7	3.3	3.6	V
Grounds						
V_{SS}	Supply voltage, GND, I/O, and core			0		V
ADV_{SS}	Supply voltage, GND, A/D module, digital			0		V
AV_{SS}	Supply voltage, GND, A/D module, analog			0		V
$USBPLLV_{SS}$	Supply voltage, GND, USBPLL			0		V
V_{IH}	High-level input voltage, I/O	DN and DP§	2.0			V
		SDA & SCL: V_{DD} related input levels‡	0.7*DV_{DD}		DV_{DD}(max) +0.5	
		All other inputs (including hysteresis inputs)	2.0		DV_{DD} + 0.3	
V_{IL}	Low-level input voltage, I/O	DN and DP§			0.8	V
		SDA &SCL: V_{DD} related input levels‡	−0.5		0.3 * DV_{DD}	
		All other inputs (including hysteresis inputs)	−0.3		0.8	
V_{hys}	Hysteresis level	Inputs with hysteresis only		0.1*DV_{DD}		V
I_{OH}	High-level output current	DN and DP§ (V_{OH} = 2.45 V)			−17.0	mA
		All other outputs			−4	
I_{OL}	Low-level output current	DN and DP§ (V_{OL} = 0.36 V)	17.0			mA
		SDA and SCL‡			3	
		All other outputs			4	
T_C	Operating case temperature		−40		85	°C

† USB PLL is susceptible to power supply ripple. The maximum allowable supply ripple is 1% for 1 Hz to 5 kHz; 1.5% for 5 kHz to 10 MHz; 3% for 10 MHz to 100 MHz, and less than 5% for 100 MHz or greater.

‡ The I^2C pins SDA and SCL do not feature fail-safe I/O buffers. These pins could potentially draw current when the device is powered down. Due to the fact that different voltage devices can be connected to the I^2C bus, the level of logic 0 (low) and logic 1 (high) are not fixed and depends on the associated V_{DD}.

§ USB I/O pins DP and DN can tolerate a short circuit at D+ and D− to 0 V or 5 V, as long as the recommended series resistors (see Figure 5−42) are connected between the D+ and DP (package), and the D− and DN (package). Do not apply a short circuit to the USB I/O pins DP and DN in absence of the series resistors.

5.2.2 Recommended Operating Conditions for CV_{DD} = 1.35 V (144 MHz)

			MIN	NOM	MAX	UNIT
Core						
CV_{DD}	Device supply voltage		1.28	1.35	1.42	V
Peripherals						
RCV_{DD}	RTC module supply voltage, core		1.28	1.35	1.42	V
RDV_{DD}	RTC module supply voltage, I/O (RTCINX1 and RTCINX2)		1.28	1.35	1.42	V
$USBPLLV_{DD}$	USBPLL supply voltage†		1.28	1.35	1.42	V
$USBV_{DD}$	USB module supply voltage, I/O (DP, DN, and PU)		3	3.3	3.6	V
DV_{DD}	Device supply voltage, I/O (except DP, DN, PU, SDA, SCL)‡		2.7	3.3	3.6	V
ADV_{DD}	A/D module digital supply voltage		2.7	3.3	3.6	V
AV_{DD}	A/D module analog supply voltage		2.7	3.3	3.6	V
Grounds						
V_{SS}	Supply voltage, GND, I/O, and core			0		V
ADV_{SS}	Supply voltage, GND, A/D module, digital			0		V
AV_{SS}	Supply voltage, GND, A/D module, analog			0		V
$USBPLLV_{SS}$	Supply voltage, GND, USBPLL			0		V
V_{IH}	High-level input voltage, I/O	DN and DP§	2.0			V
		SDA & SCL: V_{DD} related input levels‡	0.7*DV_{DD}		DV_{DD}(max) +0.5	
		All other inputs (including hysteresis inputs)	2.0		DV_{DD} + 0.3	
V_{IL}	Low-level input voltage, I/O	DN and DP§			0.8	V
		SDA &SCL: V_{DD} related input levels‡	−0.5		0.3 * DV_{DD}	
		All other inputs (including hysteresis inputs)	−0.3		0.8	
V_{hys}	Hysteresis level	Inputs with hysteresis only		0.1*DV_{DD}		V
I_{OH}	High-level output current	DN and DP§ (V_{OH} = 2.45 V)			−17.0	mA
		All other outputs			−4	
I_{OL}	Low-level output current	DN and DP§ (V_{OL} = 0.36 V)	17.0			mA
		SDA and SCL‡			3	
		All other outputs			4	
T_C	Operating case temperature		−40		85	°C

† USB PLL is susceptible to power supply ripple. The maximum allowable supply ripple is 1% for 1 Hz to 5 kHz; 1.5% for 5 kHz to 10 MHz; 3% for 10 MHz to 100 MHz, and less than 5% for 100 MHz or greater.

‡ The I^2C pins SDA and SCL do not feature fail-safe I/O buffers. These pins could potentially draw current when the device is powered down. Due to the fact that different voltage devices can be connected to the I^2C bus, the level of logic 0 (low) and logic 1 (high) are not fixed and depends on the associated V_{DD}.

§ USB I/O pins DP and DN can tolerate a short circuit at D+ and D− to 0 V or 5 V, as long as the recommended series resistors (see Figure 5−42) are connected between the D+ and DP (package), and the D− and DN (package). Do not apply a short circuit to the USB I/O pins DP and DN in absence of the series resistors.

5.2.3 Recommended Operating Conditions for CV_{DD} = 1.6 V (200 MHz)

			MIN	NOM	MAX	UNIT
Core						
CV_{DD}	Device supply voltage		1.55	1.6	1.65	V
Peripherals						
RCV_{DD}	RTC module supply voltage, core		1.55	1.6	1.65	V
RDV_{DD}	RTC module supply voltage, I/O (RTCINX1 and RTCINX2)		1.55	1.6	1.65	V
$USBPLLV_{DD}$	USBPLL supply voltage†		1.55	1.6	1.65	V
$USBV_{DD}$	USB module supply voltage, I/O (DP, DN, and PU)		3	3.3	3.6	V
DV_{DD}	Device supply voltage, I/O (except DP, DN, PU, SDA, SCL)‡		2.7	3.3	3.6	V
ADV_{DD}	A/D module digital supply voltage		2.7	3.3	3.6	V
AV_{DD}	A/D module analog supply voltage		2.7	3.3	3.6	V
Grounds						
V_{SS}	Supply voltage, GND, I/O, and core			0		V
ADV_{SS}	Supply voltage, GND, A/D module, digital			0		V
AV_{SS}	Supply voltage, GND, A/D module, analog			0		V
$USBPLLV_{SS}$	Supply voltage, GND, USBPLL			0		V
V_{IH}	High-level input voltage, I/O	DN and DP§	2.0			V
		SDA & SCL: V_{DD} related input levels‡	0.7*DV_{DD}		DV_{DD}(max) +0.5	
		All other inputs (including hysteresis inputs)	2.0		DV_{DD} + 0.3	
V_{IL}	Low-level input voltage, I/O	DN and DP§			0.8	V
		SDA & SCL: V_{DD} related input levels‡	−0.5		0.3 * DV_{DD}	
		All other inputs (including hysteresis inputs)	−0.3		0.8	
V_{hys}	Hysteresis level	Inputs with hysteresis only		0.1*DV_{DD}		V
I_{OH}	High-level output current	DN and DP§ (V_{OH} = 2.45 V)			−17.0	mA
		All other outputs			−4	
I_{OL}	Low-level output current	DN and DP§ (V_{OL} = 0.36 V)	17.0			mA
		SDA and SCL‡			3	
		All other outputs			4	
T_C	Operating case temperature		−40		85	°C

† USB PLL is susceptible to power supply ripple. The maximum allowable supply ripple is 1% for 1 Hz to 5 kHz; 1.5% for 5 kHz to 10 MHz; 3% for 10 MHz to 100 MHz, and less than 5% for 100 MHz or greater.

‡ The I^2C pins SDA and SCL do not feature fail-safe I/O buffers. These pins could potentially draw current when the device is powered down. Due to the fact that different voltage devices can be connected to the I^2C bus, the level of logic 0 (low) and logic 1 (high) are not fixed and depends on the associated V_{DD}.

§ USB I/O pins DP and DN can tolerate a short circuit at D+ and D− to 0 V or 5 V, as long as the recommended series resistors (see Figure 5−42) are connected between the D+ and DP (package), and the D− and DN (package). Do not apply a short circuit to the USB I/O pins DP and DN in absence of the series resistors.

5.3 Electrical Characteristics

5.3.1 Electrical Characteristics Over Recommended Operating Case Temperature Range for CV_{DD} = 1.2 V (108 MHz) (Unless Otherwise Noted)

PARAMETER			TEST CONDITIONS	MIN	TYP	MAX	UNIT
V_{OH}	High-level output voltage	DN and DP†	$USBV_{DD}$ = 3.0 V–3.6 V, I_{OH} = −300 µA	2.8		$USBV_{DD}$	V
		PU	$USBV_{DD}$ = 3.0 V–3.6 V, I_{OH} = −300 µA	0.9 * $USBV_{DD}$		$USBV_{DD}$	
		All other outputs	DV_{DD} = 2.7 V–3.6 V, I_{OH} = MAX	0.75 * DV_{DD}			
V_{OL}	Low-level output voltage	SDA & SCL‡	At 3 mA sink current	0		0.4	V
		DN and DP†	I_{OL} = 3.0 mA			0.3	
		All other outputs	I_{OL} = MAX			0.4	
I_{IZ}	Input current for outputs in high-impedance	Output-only or I/O pins with bus keepers (enabled)	DV_{DD} = MAX, V_O = V_{SS} to DV_{DD}	−300		300	µA
		All other output-only or I/O pins	DV_{DD} = MAX V_O = V_{SS} to DV_{DD}	−5		5	
I_I	Input current	Input pins with internal pulldown (enabled)	DV_{DD} = MAX, V_I = V_{SS} to DV_{DD}	30		300	µA
		Input pins with internal pullup (enabled)	DV_{DD} = MAX, V_I = V_{SS} to DV_{DD}	−300		−30	
		X2/CLKIN	DV_{DD} = MAX, V_I = V_{SS} to DV_{DD}	−50		50	
		All other input-only pins	DV_{DD} = MAX, V_I = V_{SS} to DV_{DD}	−5		5	
I_{DDC}	CV_{DD} Supply current, CPU + internal memory access§		CV_{DD} = 1.2 V CPU clock = 108 MHz T_C = 25°C		0.45		mA/ MHz
I_{DDP}	DV_{DD} supply current, pins active¶		DV_{DD} = 3.3 V CPU clock = 108 MHz T_C = 25°C		5.5		mA
I_{DDC}	CV_{DD} supply current, standby#	Oscillator disabled. All domains in low-power state	CV_{DD} = 1.2 V T_C = 25°C		100		µA
I_{DDP}	DV_{DD} supply current, standby	Oscillator disabled. All domains in low-power state.	DV_{DD} = 3.3 V No I/O activity T_C = 25°C		10		µA
C_i	Input capacitance				3		pF
C_o	Output capacitance				3		pF

† USB I/O pins DP and DN can tolerate a short circuit at D+ and D− to 0 V or 5 V, as long as the recommended series resistors (see Figure 5−42) are connected between the D+ and DP (package), and the D− and DN (package). Do not apply a short circuit to the USB I/O pins DP and DN in absence of the series resistors.

‡ The I^2C pins SDA and SCL do not feature fail-safe I/O buffers. These pins could potentially draw current when the device is powered down.

§ CPU executing 75% Dual MAC + 25% ADD with moderate data bus activity (table of sine values). CPU and CLKGEN (DPLL) domain are active. All other domains are idled. See the *TMS320VC5509A Power Consumption Summary* Application Report (literature number SPRAA04).

¶ One word of a table of a 16-bit sine value is written to the EMIF every 250 ns (64 Mbps). Each EMIF output pin is connected to a 10-pF load.

In CLKGEN domain idle mode, X2/CLKIN becomes output and is driven low to stop external crystals (if used) from oscillating. Standby current will be higher if an external clock source tries to drive the X2/CLKIN pin during this time.

5.3.2 Electrical Characteristics Over Recommended Operating Case Temperature Range for CV_{DD} = 1.35 V (144 MHz) (Unless Otherwise Noted)

PARAMETER			TEST CONDITIONS	MIN	TYP	MAX	UNIT
V_{OH}	High-level output voltage	DN and DP†	$USBV_{DD}$ = 3.0 V−3.6 V, I_{OH} = −300 µA	2.8		$USBV_{DD}$	V
		PU	$USBV_{DD}$ = 3.0 V−3.6 V, I_{OH} = −300 µA	0.9 * $USBV_{DD}$		$USBV_{DD}$	
		All other outputs	DV_{DD} = 2.7 V−3.6 V, I_{OH} = MAX	0.75 * DV_{DD}			
V_{OL}	Low-level output voltage	SDA & SCL‡	At 3 mA sink current	0		0.4	V
		DN and DP†	I_{OL} = 3.0 mA			0.3	
		All other outputs	I_{OL} = MAX			0.4	
I_{IZ}	Input current for outputs in high-impedance	Output-only or I/O pins with bus keepers (enabled)	DV_{DD} = MAX, V_O = V_{SS} to DV_{DD}	−300		300	µA
		All other output-only or I/O pins	DV_{DD} = MAX V_O = V_{SS} to DV_{DD}	−5		5	
I_I	Input current	Input pins with internal pulldown (enabled)	DV_{DD} = MAX, V_I = V_{SS} to DV_{DD}	30		300	µA
		Input pins with internal pullup (enabled)	DV_{DD} = MAX, V_I = V_{SS} to DV_{DD}	−300		−30	
		X2/CLKIN	DV_{DD} = MAX, V_I = V_{SS} to DV_{DD}	−50		50	
		All other input-only pins	DV_{DD} = MAX, V_I = V_{SS} to DV_{DD}	−5		5	
I_{DDC}	CV_{DD} Supply current, CPU + internal memory access§		CV_{DD} = 1.35 V CPU clock = 144 MHz T_C = 25°C		0.51		mA/ MHz
I_{DDP}	DV_{DD} supply current, pins active¶		DV_{DD} = 3.3 V CPU clock = 144 MHz T_C = 25°C		5.5		mA
I_{DDC}	CV_{DD} supply current, standby#	Oscillator disabled. All domains in low-power state	CV_{DD} = 1.35 V T_C = 25°C		125		µA
I_{DDP}	DV_{DD} supply current, standby	Oscillator disabled. All domains in low-power state.	DV_{DD} = 3.3 V No I/O activity T_C = 25°C		10		µA
C_i	Input capacitance				3		pF
C_o	Output capacitance				3		pF

† USB I/O pins DP and DN can tolerate a short circuit at D+ and D− to 0 V or 5 V, as long as the recommended series resistors (see Figure 5−42) are connected between the D+ and DP (package), and the D− and DN (package). Do not apply a short circuit to the USB I/O pins DP and DN in absence of the series resistors.

‡ The I^2C pins SDA and SCL do not feature fail-safe I/O buffers. These pins could potentially draw current when the device is powered down.

§ CPU executing 75% Dual MAC + 25% ADD with moderate data bus activity (table of sine values). CPU and CLKGEN (DPLL) domain are active. All other domains are idled. See the *TMS320VC5509A Power Consumption Summary* Application Report (literature number SPRAA04).

¶ One word of a table of a 16-bit sine value is written to the EMIF every 250 ns (64 Mbps). Each EMIF output pin is connected to a 10-pF load.

In CLKGEN domain idle mode, X2/CLKIN becomes output and is driven low to stop external crystals (if used) from oscillating. Standby current will be higher if an external clock source tries to drive the X2/CLKIN pin during this time.

5.3.3 Electrical Characteristics Over Recommended Operating Case Temperature Range for CV_{DD} = 1.6 V (200 MHz) (Unless Otherwise Noted)

PARAMETER			TEST CONDITIONS	MIN	TYP	MAX	UNIT
V_{OH}	High-level output voltage	DN and DP†	$USBV_{DD}$ = 3.0 V–3.6 V, I_{OH} = −300 µA	2.8		$USBV_{DD}$	V
		PU	$USBV_{DD}$ = 3.0 V–3.6 V, I_{OH} = −300 µA	0.9 * $USBV_{DD}$		$USBV_{DD}$	
		All other outputs	DV_{DD} = 2.7 V–3.6 V, I_{OH} = MAX	0.75 * DV_{DD}			
V_{OL}	Low-level output voltage	SDA & SCL‡	At 3 mA sink current	0		0.4	V
		DN and DP†	I_{OL} = 3.0 mA			0.3	
		All other outputs	I_{OL} = MAX			0.4	
I_{IZ}	Input current for outputs in high-impedance	Output-only or I/O pins with bus keepers (enabled)	DV_{DD} = MAX, V_O = V_{SS} to DV_{DD}	−300		300	µA
		All other output-only or I/O pins	DV_{DD} = MAX V_O = V_{SS} to DV_{DD}	−5		5	
I_I	Input current	Input pins with internal pulldown (enabled)	DV_{DD} = MAX, V_I = V_{SS} to DV_{DD}	30		300	µA
		Input pins with internal pullup (enabled)	DV_{DD} = MAX, V_I = V_{SS} to DV_{DD}	−300		−30	
		X2/CLKIN	DV_{DD} = MAX, V_I = V_{SS} to DV_{DD}	−50		50	
		All other input-only pins	DV_{DD} = MAX, V_I = V_{SS} to DV_{DD}	−5		5	
I_{DDC}	CV_{DD} Supply current, CPU + internal memory access§		CV_{DD} = 1.6 V CPU clock = 200 MHz T_C = 25°C		0.60		mA/ MHz
I_{DDP}	DV_{DD} supply current, pins active¶		DV_{DD} = 3.3 V CPU clock = 200 MHz T_C = 25°C		5.5		mA
I_{DDC}	CV_{DD} supply current, standby#	Oscillator disabled. All domains in low-power state	CV_{DD} = 1.6 V T_C = 25°C		150		µA
I_{DDP}	DV_{DD} supply current, standby	Oscillator disabled. All domains in low-power state.	DV_{DD} = 3.3 V No I/O activity T_C = 25°C		10		µA
C_i	Input capacitance				3		pF
C_o	Output capacitance				3		pF

† USB I/O pins DP and DN can tolerate a short circuit at D+ and D− to 0 V or 5 V, as long as the recommended series resistors (see Figure 5−42) are connected between the D+ and DP (package), and the D− and DN (package). Do not apply a short circuit to the USB I/O pins DP and DN in absence of the series resistors.

‡ The I^2C pins SDA and SCL do not feature fail-safe I/O buffers. These pins could potentially draw current when the device is powered down.

§ CPU executing 75% Dual MAC + 25% ADD with moderate data bus activity (table of sine values). CPU and CLKGEN (DPLL) domain are active. All other domains are idled. See the *TMS320VC5509A Power Consumption Summary* Application Report (literature number SPRAA04).

¶ One word of a table of a 16-bit sine value is written to the EMIF every 250 ns (64 Mbps). Each EMIF output pin is connected to a 10-pF load.

In CLKGEN domain idle mode, X2/CLKIN becomes output and is driven low to stop external crystals (if used) from oscillating. Standby current will be higher if an external clock source tries to drive the X2/CLKIN pin during this time.

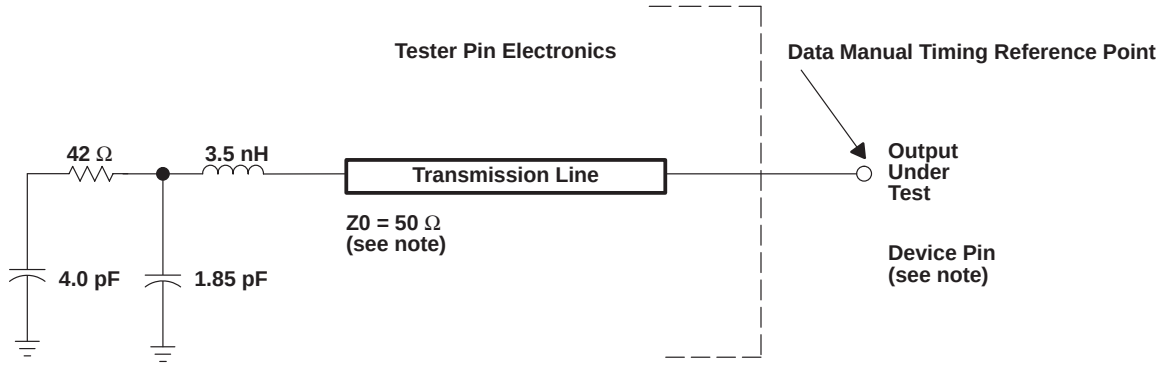

NOTE: The data manual provides timing at the device pin. For output timing analysis, the tester pin electronics and its transmission line effects must be taken into account. A transmission line with a delay of 2 ns or longer can be used to produce the desired transmission line effect. The transmission line is intended as a load only. It is not necessary to add or subtract the transmission line delay (2 ns or longer) from the data manual timings.

Input requirements in this data manual are tested with an input slew rate of < 4 Volts per nanosecond (4 V/ns) at the device pin.

Figure 5−1. 3.3-V Test Load Circuit

5.4 ESD Performance

ESD stress levels were performed in compliance with the following JEDEC standards with the results indicated below:

- Charged Device Model (CDM), based on JEDEC Specification JESD22-C101, passed at ±500 V
- Human Body Model (HBM), based on JEDEC Specification JESD22-A114, passed at ±1500 V

NOTE:

According to industry research publications, ESD-CDM testing results show better correlation to manufacturing line and field failure rates than ESD-HBM testing. 500-V CDM is commonly considered as a safe passing level.

5.5 Timing Parameter Symbology

Timing parameter symbols used in the timing requirements and switching characteristics tables are created in accordance with JEDEC Standard 100. To shorten the symbols, some of the pin names and other related terminology have been abbreviated as follows:

Lowercase subscripts and their meanings:

a	access time
c	cycle time (period)
d	delay time
dis	disable time
en	enable time
f	fall time
h	hold time
r	rise time
su	setup time
t	transition time
v	valid time
w	pulse duration (width)
X	Unknown, changing, or don't care level

Letters and symbols and their meanings:

H	High
L	Low
V	Valid
Z	High-impedance

5.6 Clock Options

The frequency of the reference clock provided at the X2/CLKIN pin can be divided by a factor of two or four or multiplied by one of several values to generate the internal machine cycle.

5.6.1 Internal System Oscillator With External Crystal

The internal oscillator is always enabled following a device reset. The oscillator requires an external crystal connected across the X1 and X2/CLKIN pins. If the internal oscillator is not used, an external clock source must be applied to the X2/CLKIN pin and the X1 pin should be left unconnected. Since the internal oscillator can be used as a clock source to the PLLs, the crystal oscillation frequency can be multiplied to generate the CPU clock and USB clock, if desired.

The crystal should be in fundamental-mode operation, and parallel resonant, with a maximum effective series resistance (ESR) specified in Table 5−1. The connection of the required circuit is shown in Figure 5−2. Under some conditions, all the components shown are not required. The capacitors, C_1 and C_2, should be chosen such that the equation below is satisfied. C_L in the equation is the load specified for the crystal that is also specified in Table 5−1.

$$C_L = \frac{C_1 C_2}{(C_1 + C_2)}$$

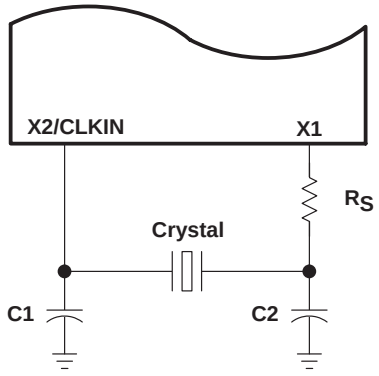

Figure 5−2. Internal System Oscillator With External Crystal

Table 5−1. Recommended Crystal Parameters

FREQUENCY RANGE (MHz)	MAX ESR (Ω)	TYP C_{LOAD} (pF)	MAX C_{SHUNT} (pF)	R_S (Ω)
20−15	20	10	7	0
15−12	30	16	7	0
12−10	40	16	7	100
10−8	60	18	7	470
8−6	80	18	7	1.5k
6−5	80	18	7	2.2k

Although the recommended ESR presented in Table 5−1 is maximum, theoretically a crystal with a lower maximum ESR might seem to meet the requirement. It is recommended that crystals which meet the maximum ESR specification in Table 5−1 are used.

5.6.2 Layout Considerations

Since parasitic capacitance, inductance and resistance can be significant in any circuit, good PC board layout practices should always be observed when planning trace routing to the discrete components used in the oscillator circuit. Specifically, the crystal and the associated discrete components should be located as close to the DSP as physically possible. Also, X1 and X2/CLKIN traces should be separated as soon as possible after routing away from the DSP to minimize parasitic capacitance between them, and a ground trace should be run between these two signal lines. This also helps to minimize stray capacitance between these two signals.

5.6.3 Clock Generation in Bypass Mode (DPLL Disabled)

The frequency of the reference clock provided at the X2/CLKIN pin can be divided by a factor of one, two, or four to generate the internal CPU clock cycle. The divide factor (D) is set in the BYPASS_DIV field of the clock mode register. The contents of this field only affect clock generation while the device is in bypass mode. In this mode, the digital phase-locked loop (DPLL) clock synthesis is disabled.

Table 5−2 and Table 5−3 assume testing over recommended operating conditions and H = $0.5t_{c(CO)}$ (see Figure 5−3).

Table 5−2. CLKIN Timing Requirements

NO.			CV_{DD} = 1.2 V CV_{DD} = 1.35 V CV_{DD} = 1.6 V		UNIT
			MIN	MAX	
C1	$t_{c(CI)}$	Cycle time, X2/CLKIN	20	400†	ns
C2	$t_{f(CI)}$	Fall time, X2/CLKIN		4	ns
C3	$t_{r(CI)}$	Rise time, X2/CLKIN		4	ns
C10	$t_{w(CIL)}$	Pulse duration, CLKIN low	6		ns
C11	$t_{w(CIH)}$	Pulse duration, CLKIN high	6		ns

† This device utilizes a fully static design and therefore can operate with $t_{c(CI)}$ approaching ∞. If an external crystal is used, the X2/CLKIN cycle time is limited by the crystal frequency range listed in Table 5−1.

Table 5−3. CLKOUT Switching Characteristics

NO.	PARAMETER		CV_{DD} = 1.2 V CV_{DD} = 1.35 V CV_{DD} = 1.6 V			UNIT
			MIN	TYP	MAX	
C4	$t_{c(CO)}$	Cycle time, CLKOUT	20‡	D*$t_{c(CI)}$§	1600†	ns
C5	$t_{d(CI-CO)}$	Delay time, X2/CLKIN high to CLKOUT high/low	5	15	25	ns
C6	$t_{f(CO)}$	Fall time, CLKOUT		1		ns
C7	$t_{r(CO)}$	Rise time, CLKOUT		1		ns
C8	$t_{w(COL)}$	Pulse duration, CLKOUT low	H − 1		H + 1	ns
C9	$t_{w(COH)}$	Pulse duration, CLKOUT high	H − 1		H + 1	ns

† This device utilizes a fully static design and therefore can operate with $t_{c(CO)}$ approaching ∞. If an external crystal is used, the X2/CLKIN cycle time is limited by the crystal frequency range listed in Table 5−1.
‡ It is recommended that the DPLL synthesised clocking option be used to obtain maximum operating frequency.
§ D = 1/(PLL Bypass Divider)

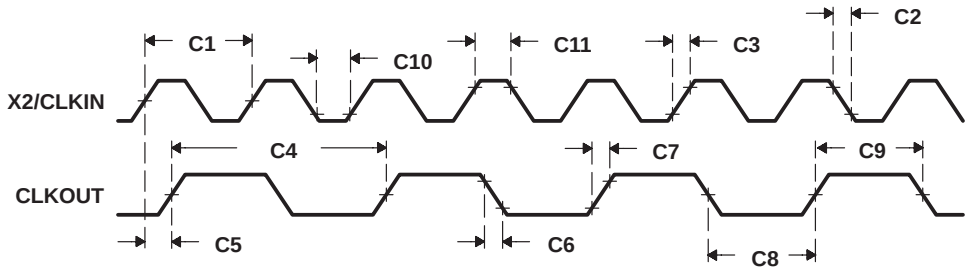

NOTE A: The relationship of X2/CLKIN to CLKOUT depends on the PLL bypass divide factor chosen for the CLKMD register. The waveform relationship shown in Figure 5−3 is intended to illustrate the timing parameters based on CLKOUT = 1/2(CLKIN) configuration.

Figure 5−3. Bypass Mode Clock Timings

5.6.4 Clock Generation in Lock Mode (DPLL Synthesis Enabled)

The frequency of the reference clock provided at the X2/CLKIN pin can be multiplied by a synthesis factor of N to generate the internal CPU clock cycle. The synthesis factor is determined by:

$$N = \frac{M}{D_L}$$

where: M = the multiply factor set in the PLL_MULT field of the clock mode register
D_L = the divide factor set in the PLL_DIV field of the clock mode register

Valid values for M are (multiply by) 2 to 31. Valid values for D_L are (divide by) 1, 2, 3, and 4.

For detailed information on clock generation configuration, see the *TMS320C55x DSP Peripherals Overview Reference Guide* (literature number SPRU317).

Table 5−4 and Table 5−5 assume testing over recommended operating conditions and H = $0.5t_{c(CO)}$ (see Figure 5−4).

Table 5−4. Multiply-By-N Clock Option Timing Requirements

NO.				CV_{DD} = 1.2 V CV_{DD} = 1.35 V CV_{DD} = 1.6 V		UNIT
				MIN	MAX	
C1	$t_{c(CI)}$	Cycle time, X2/CLKIN	DPLL synthesis enabled	20†	400	ns
C2	$t_{f(CI)}$	Fall time, X2/CLKIN			4	ns
C3	$t_{r(CI)}$	Rise time, X2/CLKIN			4	ns
C10	$t_{w(CIL)}$	Pulse duration, CLKIN low		6		ns
C11	$t_{w(CIH)}$	Pulse duration, CLKIN high		6		ns

† The clock frequency synthesis factor and minimum X2/CLKIN cycle time should be chosen such that the resulting CLKOUT cycle time is within the specified range ($t_{c(CO)}$). If an external crystal is used, the X2/CLKIN cycle time is limited by the crystal frequency range listed in Table 5−1.

Table 5−5. Multiply-By-N Clock Option Switching Characteristics

NO.	PARAMETER		CV_{DD} = 1.2 V			CV_{DD} = 1.35 V			CV_{DD} = 1.6 V			UNIT
			MIN	TYP	MAX	MIN	TYP	MAX	MIN	TYP	MAX	
C4	$t_{c(CO)}$	Cycle time, CLKOUT	9.26	$t_{c(CI)}$*N‡	1600	6.95	$t_{c(CI)}$*N‡	1600	5	$t_{c(CI)}$*N‡	1600	ns
C6	$t_{f(CO)}$	Fall time, CLKOUT		1			1			1		ns
C7	$t_{r(CO)}$	Rise time, CLKOUT		1			1			1		ns
C8	$t_{w(COL)}$	Pulse duration, CLKOUT low	H − 1		H + 1	H − 1		H + 1	H − 1		H + 1	ns
C9	$t_{w(COH)}$	Pulse duration, CLKOUT high	H − 1		H + 1	H − 1		H + 1	H − 1		H + 1	ns
C12	$t_{d(CI–CO)}$	Delay time, X2/CLKIN high/low to CLKOUT high/low	5	15	25	5	15	25	5	15	25	ns

‡ N = Clock frequency synthesis factor

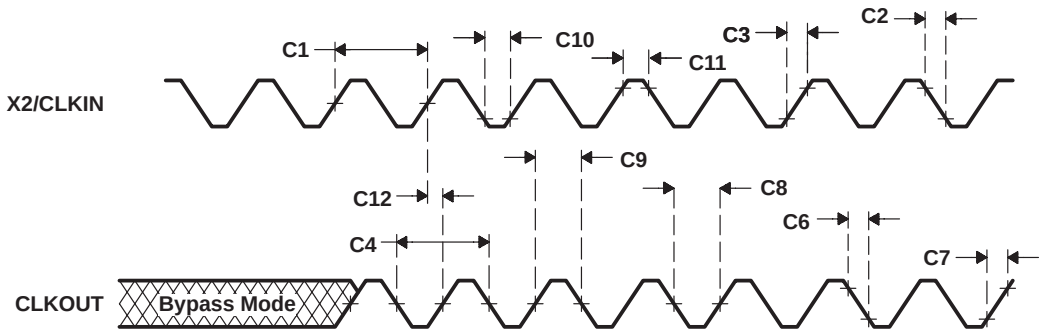

NOTE A: The relationship of X2/CLKIN to CLKOUT depends on the PLL multiply and divide factor chosen for the CLKMD register. The waveform relationship shown in Figure 5−3 is intended to illustrate the timing parameters based on CLKOUT = 1xCLKIN configuration.

Figure 5−4. External Multiply-by-N Clock Timings

5.6.5 Real-Time Clock Oscillator With External Crystal

The real-time clock module includes an oscillator circuit. The oscillator requires an external 32.768-kHz crystal connected across the RTCINX1 and RTCINX2 pins. The connection of the required circuit, consisting of the crystal and two load capacitors, is shown in Figure 5−5. The load capacitors, C_1 and C_2, should be chosen such that the equation below is satisfied. C_L in the equation is the load specified for the crystal.

$$C_L = \frac{C_1 C_2}{(C_1 + C_2)}$$

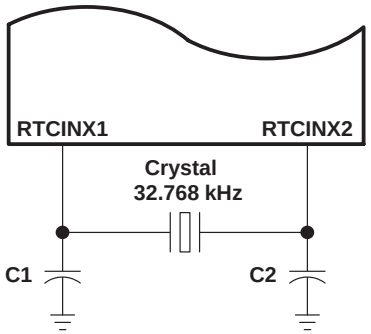

Figure 5−5. Real-Time Clock Oscillator With External Crystal

NOTE: The RTC can be idled by not supplying its 32-kHz oscillator signal. In order to keep RTC power dissipation to a minimum when the RTC module is not used, it is recommended that the RTC module be powered up, the RTC input pin (RTCINX1) be pulled low, and the RTC output pin (RTCINX2) be left floating.

Table 5−6. Recommended RTC Crystal Parameters

PARAMETER		MIN	NOM	MAX	UNIT
f_O	Frequency of oscillation†		32.768		kHz
ESR	Series resistance†	30		60	kΩ
C_L	Load capacitance		12.5		pF
DL	Crystal drive level			1	µW

† ESR must be 200 kΩ or greater at frequencies other than 32.768kHz. Otherwise, oscillations at overtone frequencies may occur.

5.7 Memory Interface Timings

5.7.1 Asynchronous Memory Timings

Table 5−7 and Table 5−8 assume testing over recommended operating conditions (see Figure 5−6 and Figure 5−7).

Table 5−7. Asynchronous Memory Cycle Timing Requirements

NO.			CV_{DD} = 1.2 V CV_{DD} = 1.35 V		CV_{DD} = 1.6 V		UNIT
			MIN	MAX	MIN	MAX	
M1	$t_{su(DV-COH)}$	Setup time, read data valid before CLKOUT high†	6		5		ns
M2	$t_{h(COH-DV)}$	Hold time, read data valid after CLKOUT high	0		0		ns
M3	$t_{su(ARDY-COH)}$	Setup time, ARDY valid before CLKOUT high†	10		7		ns
M4	$t_{h(COH-ARDY)}$	Hold time, ARDY valid after CLKOUT high	0		0		ns

† To ensure data setup time, simply program the strobe width wide enough. ARDY is internally synchronized. If ARDY does meet setup or hold time, it may be recognized in the current cycle or the next cycle. Thus, ARDY can be an asynchronous input.

Table 5−8. Asynchronous Memory Cycle Switching Characteristics

NO.	PARAMETER		CV_{DD} = 1.2 V CV_{DD} = 1.35 V		CV_{DD} = 1.6 V		UNIT
			MIN	MAX	MIN	MAX	
M5	$t_{d(COH-CEV)}$	Delay time, CLKOUT high to $\overline{CEx}$ valid	−2	4	−2	4	ns
M6	$t_{d(COH-CEIV)}$	Delay time, CLKOUT high to $\overline{CEx}$ invalid	−2	4	−2	4	ns
M7	$t_{d(COH-BEV)}$	Delay time, CLKOUT high to $\overline{BEx}$ valid		4		4	ns
M8	$t_{d(COH-BEIV)}$	Delay time, CLKOUT high to $\overline{BEx}$ invalid	−2		−2		ns
M9	$t_{d(COH-AV)}$	Delay time, CLKOUT high to address valid		4		4	ns
M10	$t_{d(COH-AIV)}$	Delay time, CLKOUT high to address invalid	−2		−2		ns
M11	$t_{d(COH-AOEV)}$	Delay time, CLKOUT high to $\overline{AOE}$ valid	−2	4	−2	4	ns
M12	$t_{d(COH-AOEIV)}$	Delay time, CLKOUT high to $\overline{AOE}$ invalid	−2	4	−2	4	ns
M13	$t_{d(COH-AREV)}$	Delay time, CLKOUT high to $\overline{ARE}$ valid	−2	4	−2	4	ns
M14	$t_{d(COH-AREIV)}$	Delay time, CLKOUT high to $\overline{ARE}$ invalid	−2	4	−2	4	ns
M15	$t_{d(COH-DV)}$	Delay time, CLKOUT high to data valid		4		4	ns
M16	$t_{d(COH-DIV)}$	Delay time, CLKOUT high to data invalid	−2		−2		ns
M17	$t_{d(COH-AWEV)}$	Delay time, CLKOUT high to $\overline{AWE}$ valid	−2	4	−2	4	ns
M18	$t_{d(COH-AWEIV)}$	Delay time, CLKOUT high to $\overline{AWE}$ invalid	−2	4	−2	4	ns

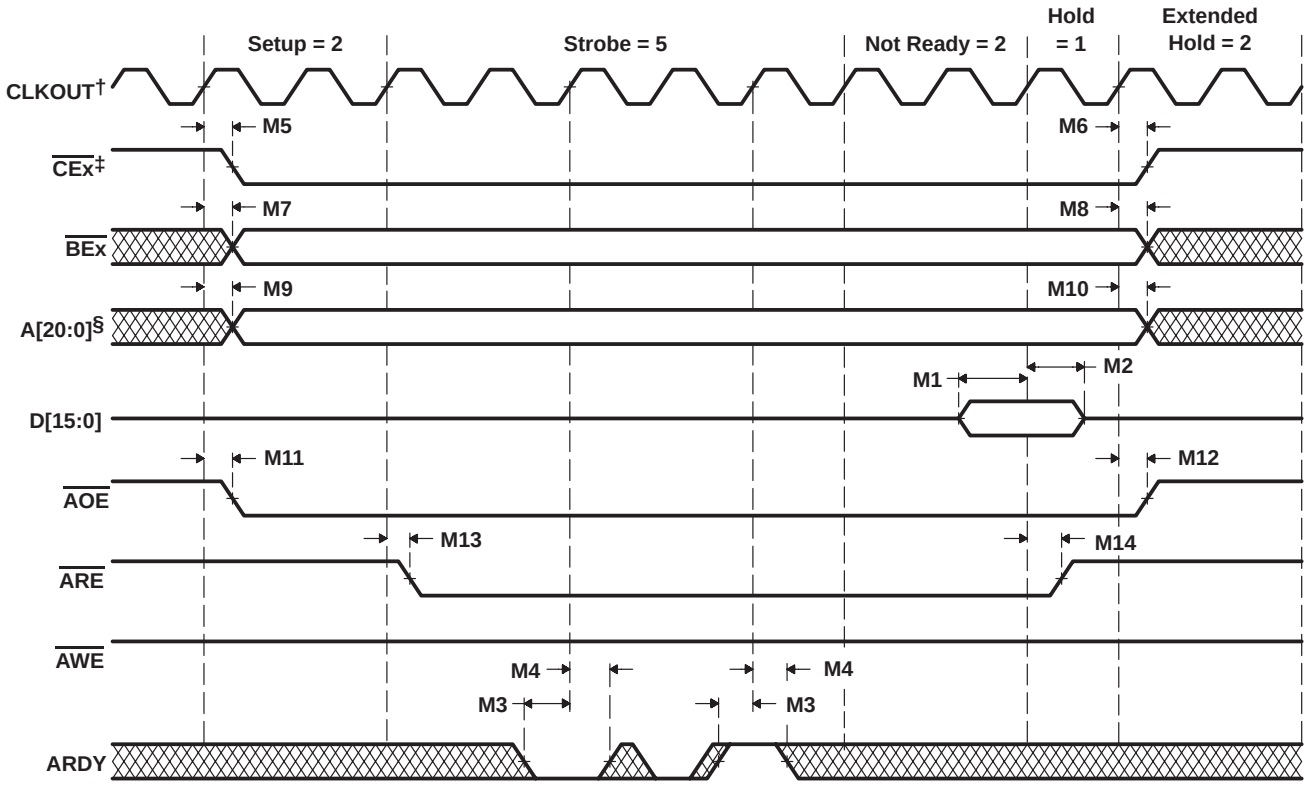

† CLKOUT is equal to CPU clock
‡ $\overline{\text{CEx}}$ becomes active depending on the memory address space being accessed
§ A[13:0] for LQFP

Figure 5−6. Asynchronous Memory Read Timings

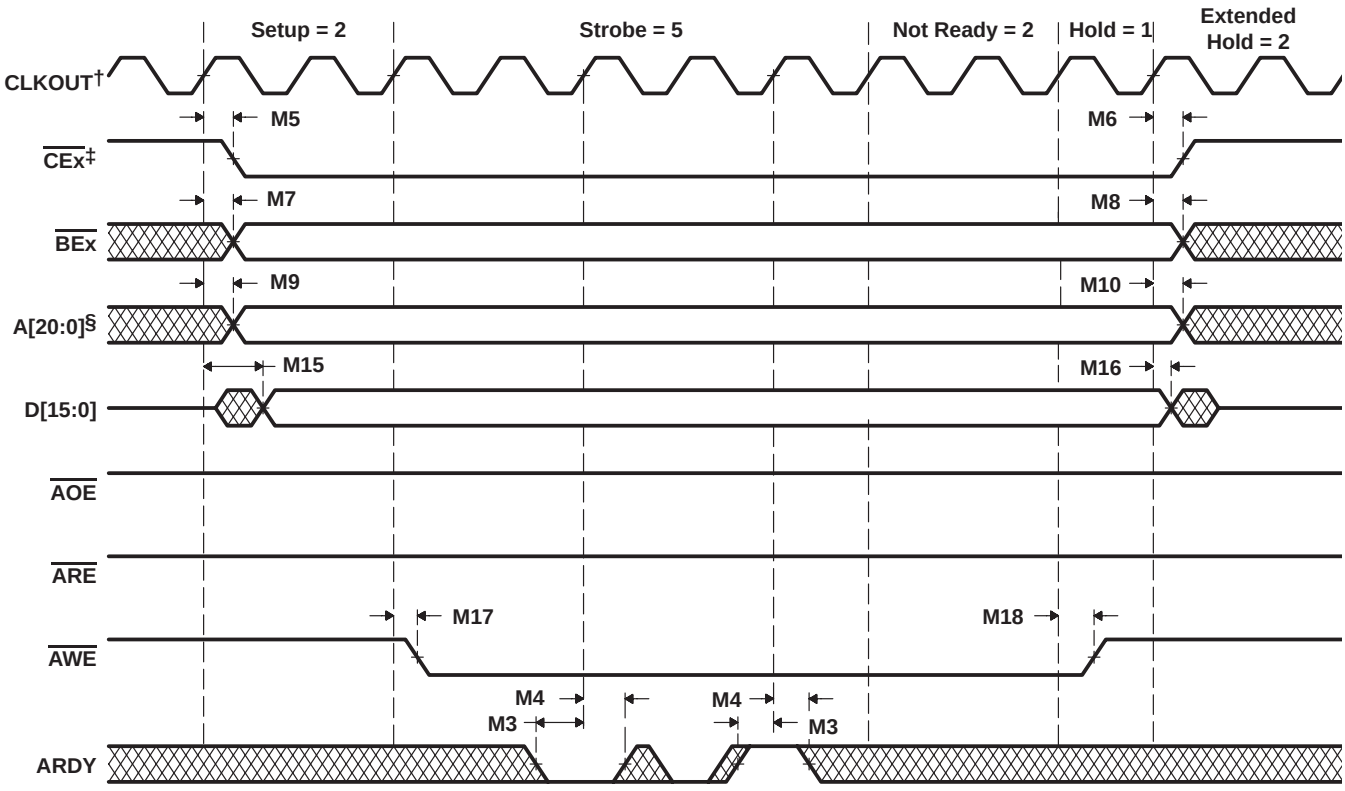

† CLKOUT is equal to CPU clock
‡ CEx becomes active depending on the memory address space being accessed
§ A[13:0] for LQFP

Figure 5−7. Asynchronous Memory Write Timings

5.7.2 Synchronous DRAM (SDRAM) Timings

Table 5−9 and Table 5−10 assume testing over recommended operating conditions (see Figure 5−8 through Figure 5−14).

Table 5−9. Synchronous DRAM Cycle Timing Requirements

NO.			CV_{DD} = 1.2 V CV_{DD} = 1.35 V		CV_{DD} = 1.6 V		UNIT
			MIN	MAX	MIN	MAX	
M19	$t_{su(DV-CLKMEMH)}$	Setup time, read data valid before CLKMEM high	3		3		ns
M20	$t_{h(CLKMEMH-DV)}$	Hold time, read data valid after CLKMEM high	2		2		ns
M21	$t_{c(CLKMEM)}$	Cycle time, CLKMEM	9.26†		7.52‡		ns

† Maximum SDRAM operating frequency = 108 MHz. Actual attainable maximum operating frequency will depend on the quality of the PC board design and the memory chip timing requirement.
‡ Maximum SDRAM operating frequency = 133 MHz. Actual attainable maximum operating frequency will depend on the quality of the PC board design and the memory chip timing requirement.

Table 5−10. Synchronous DRAM Cycle Switching Characteristics

NO.	PARAMETER		CV_{DD} = 1.2 V CV_{DD} = 1.35 V		CV_{DD} = 1.6 V		UNIT
			MIN	MAX	MIN	MAX	
M22	$t_{d(CLKMEMH-CEL)}$	Delay time, CLKMEM high to $\overline{CEx}$ low	1.2	7	1.2	5	ns
M23	$t_{d(CLKMEMH-CEH)}$	Delay time, CLKMEM high to $\overline{CEx}$ high	1.2	7	1.2	5	ns
M24	$t_{d(CLKMEMH-BEV)}$	Delay time, CLKMEM high to $\overline{BEx}$ valid	1.2	7	1.2	5	ns
M25	$t_{d(CLKMEMH-BEIV)}$	Delay time, CLKMEM high to $\overline{BEx}$ invalid	1.2	7	1.2	5	ns
M26	$t_{d(CLKMEMH-AV)}$	Delay time, CLKMEM high to address valid	1.2	7	1.2	5	ns
M27	$t_{d(CLKMEMH-AIV)}$	Delay time, CLKMEM high to address invalid	1.2	7	1.2	5	ns
M28	$t_{d(CLKMEMH-SDCASL)}$	Delay time, CLKMEM high to $\overline{SDCAS}$ low	1.2	7	1.2	5	ns
M29	$t_{d(CLKMEMH-SDCASH)}$	Delay time, CLKMEM high to $\overline{SDCAS}$ high	1.2	7	1.2	5	ns
M30	$t_{d(CLKMEMH-DV)}$	Delay time, CLKMEM high to data valid	1.2	7	1.2	5	ns
M31	$t_{d(CLKMEMH-DIV)}$	Delay time, CLKMEM high to data invalid	1.2	7	1.2	5	ns
M32	$t_{d(CLKMEMH-SDWEL)}$	Delay time, CLKMEM high to $\overline{SDWE}$ low	1.2	7	1.2	5	ns
M33	$t_{d(CLKMEMH-SDWEH)}$	Delay time, CLKMEM high to $\overline{SDWE}$ high	1.2	7	1.2	5	ns
M34	$t_{d(CLKMEMH-SDA10V)}$	Delay time, CLKMEM high to SDA10 valid	1.2	7	1.2	5	ns
M35	$t_{d(CLKMEMH-SDA10IV)}$	Delay time, CLKMEM high to SDA10 invalid	1.2	7	1.2	5	ns
M36	$t_{d(CLKMEMH-SDRASL)}$	Delay time, CLKMEM high to $\overline{SDRAS}$ low	1.2	7	1.2	5	ns
M37	$t_{d(CLKMEMH-SDRASH)}$	Delay time, CLKMEM high to $\overline{SDRAS}$ high	1.2	7	1.2	5	ns
M38	$t_{d(CLKMEMH–CKEL)}$	Delay time, CLKMEM high to CKE low	1.2	7	1.2	5	ns
M39	$t_{d(CLKMEMH–CKEH)}$	Delay time, CLKMEM high to CKE high	1.2	7	1.2	5	ns

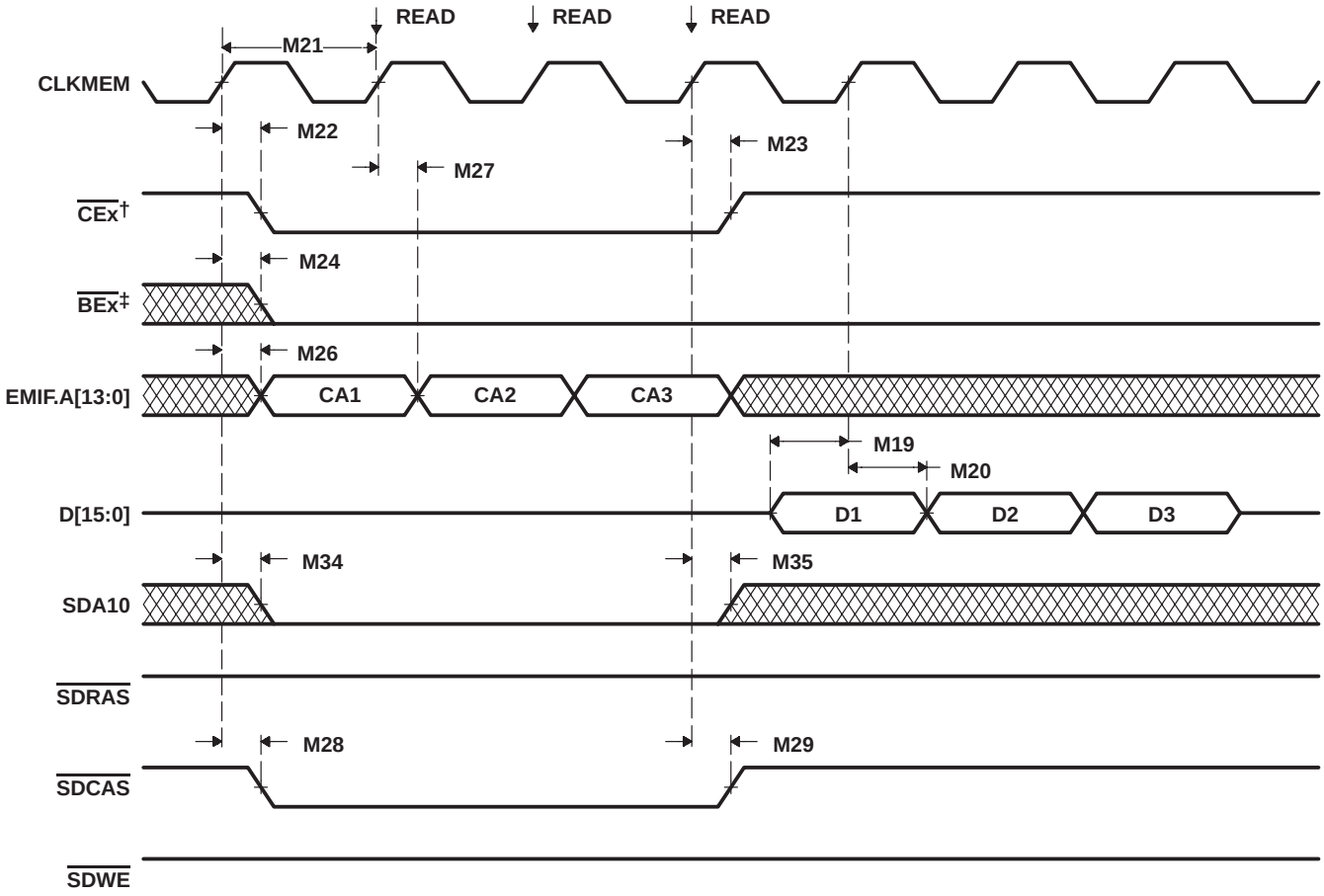

† The chip enable that becomes active depends on the address being accessed.
‡ All BE[1:0] signals are driven low (active) during reads. Byte manipulation of the read data is performed inside the EMIF. These signals remain active until the next access that is not an SDRAM read occurs.

Figure 5−8. Three SDRAM Read Commands

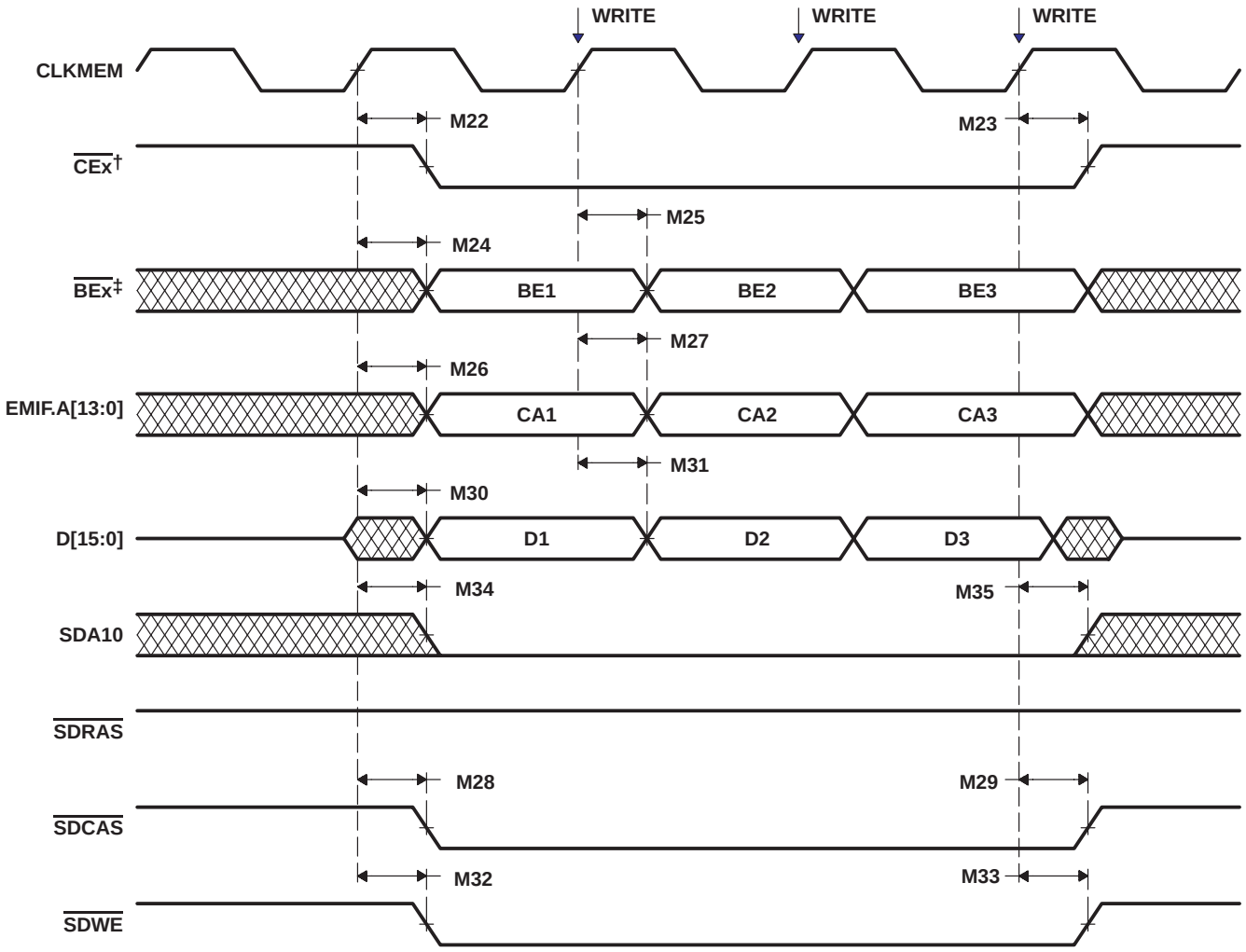

† The chip enable that becomes active depends on the address being accessed.
‡ All BE[1:0] signals are driven low (active) during reads. Byte manipulation of the read data is performed inside the EMIF. These signals remain active until the next access that is not an SDRAM read occurs.

Figure 5−9. Three SDRAM WRT Commands

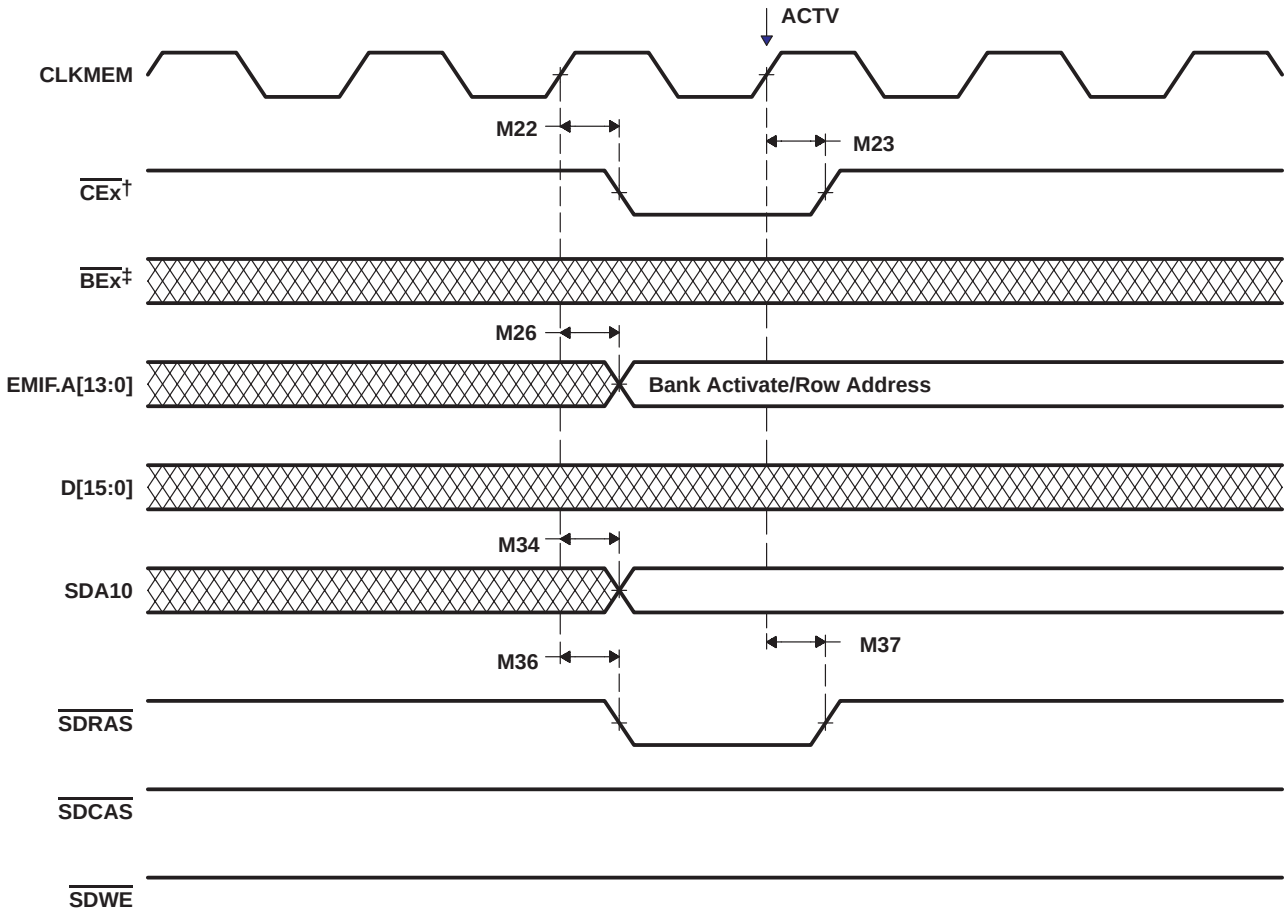

† The chip enable that becomes active depends on the address being accessed.
‡ All BE[1:0] signals are driven low (active) during reads. Byte manipulation of the read data is performed inside the EMIF. These signals remain active until the next access that is not an SDRAM read occurs.

Figure 5−10. SDRAM ACTV Command

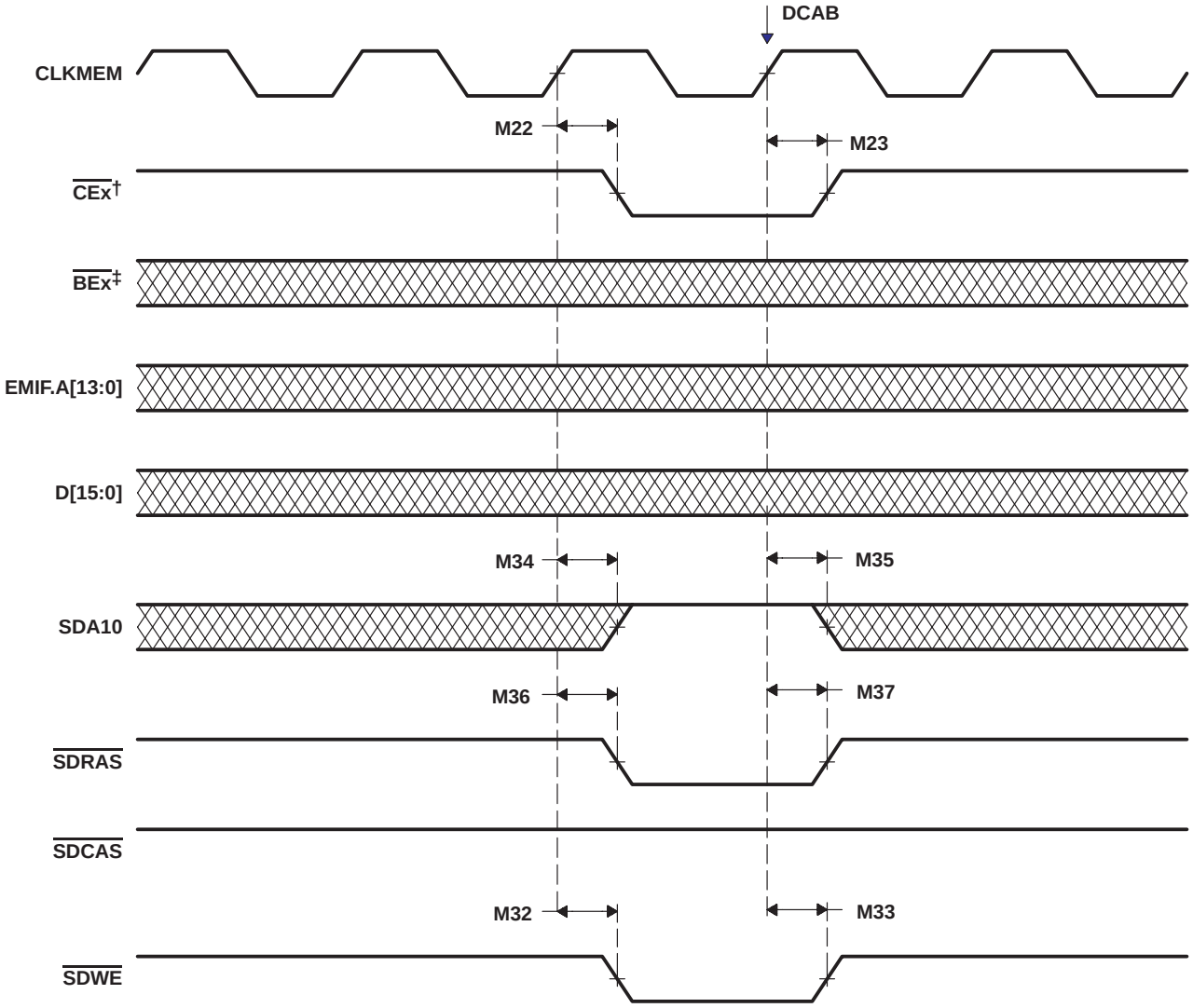

† The chip enable that becomes active depends on the address being accessed.
‡ All BE[1:0] signals are driven low (active) during reads. Byte manipulation of the read data is performed inside the EMIF. These signals remain active until the next access that is not an SDRAM read occurs.

Figure 5−11. SDRAM DCAB Command

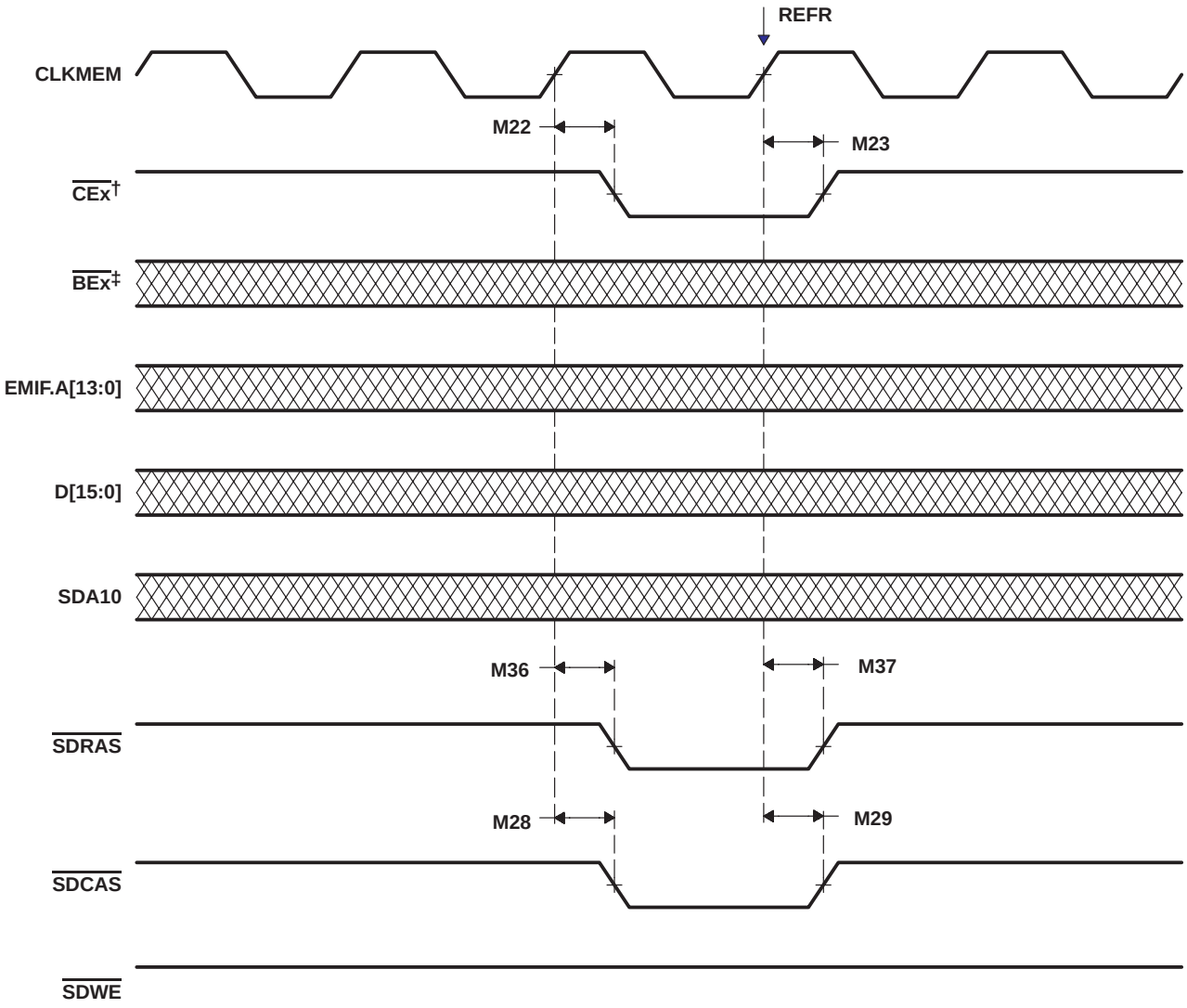

† The chip enable that becomes active depends on the address being accessed.
‡ All BE[1:0] signals are driven low (active) during reads. Byte manipulation of the read data is performed inside the EMIF. These signals remain active until the next access that is not an SDRAM read occurs.

Figure 5−12. SDRAM REFR Command

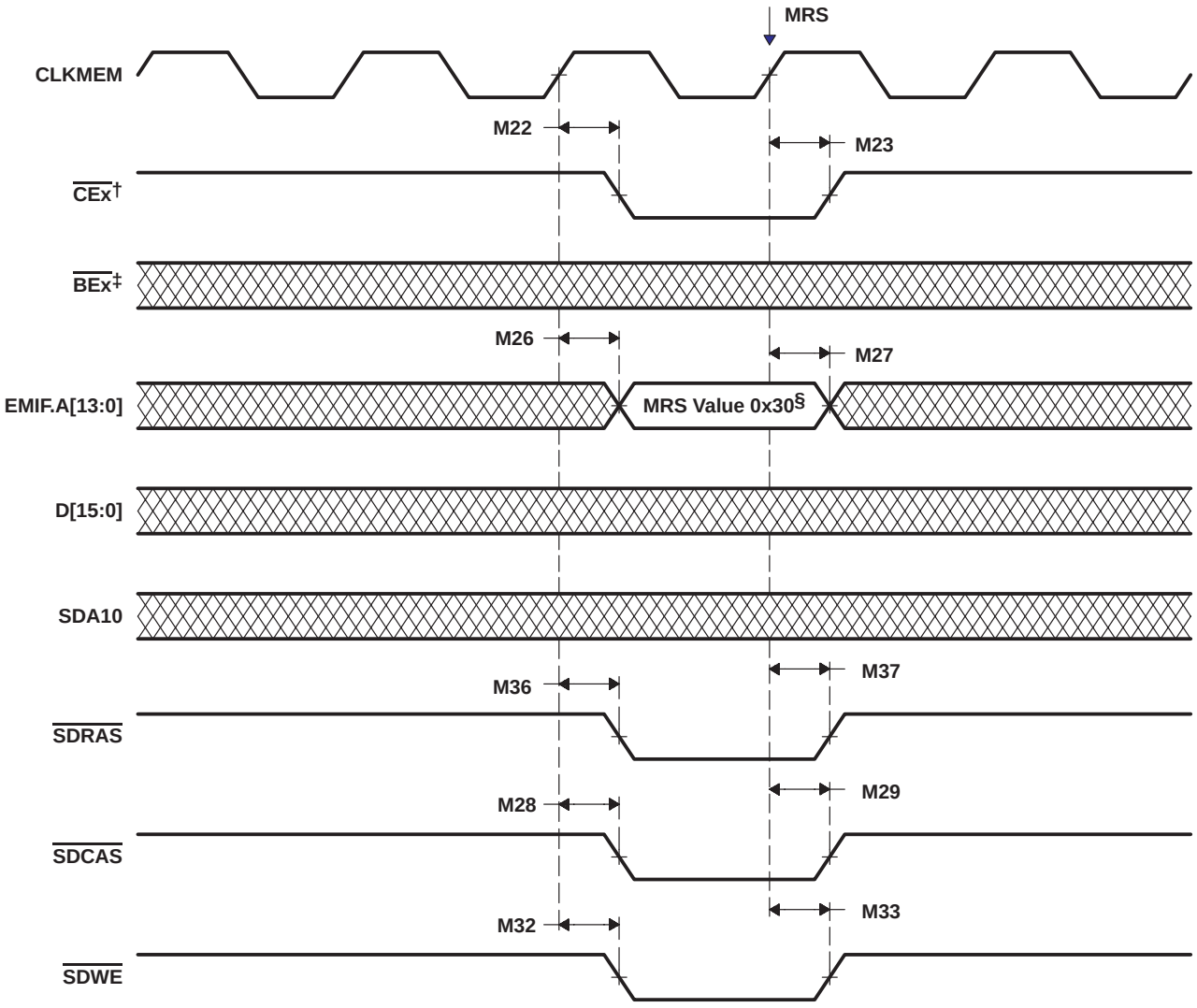

† The chip enable that becomes active depends on the address being accessed.
‡ All BE[1:0] signals are driven low (active) during reads. Byte manipulation of the read data is performed inside the EMIF. These signals remain active until the next access that is not an SDRAM read occurs.
§ Write burst length = 1
Read latency = 3
Burst type = 0 (serial)
Burst length = 1

Figure 5−13. SDRAM MRS Command

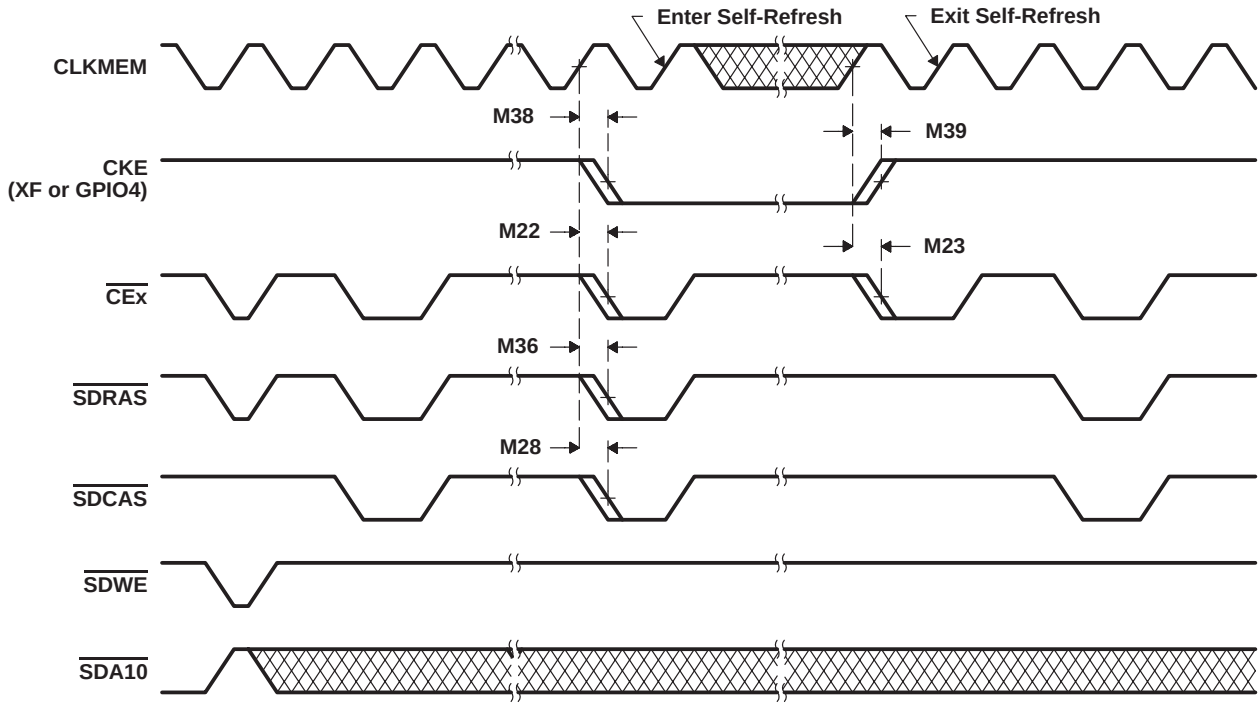

Figure 5−14. SDRAM Self-Refresh Command

5.8 Reset Timings

5.8.1 Power-Up Reset (On-Chip Oscillator Active)

Table 5−11 assumes testing over recommended operating conditions (see Figure 5−15).

Table 5−11. Power-Up Reset (On-Chip Oscillator Active) Timing Requirements

NO.			CV_{DD} = 1.2 V CV_{DD} = 1.35 V		CV_{DD} = 1.6 V		UNIT
			MIN	MAX	MIN	MAX	
R1	$t_{h(SUPSTBL-RSTL)}$	Hold time, $\overline{RESET}$ low after oscillator stable†	3P‡		3P‡		ns

† Oscillator stable time depends on the crystal characteristic (i.e., frequency, ESR, etc.) which varies from one crystal manufacturer to another. Based on the crystal characteristics, the oscillator stable time can be in the range of a few to 10s of ms. A reset circuit with 100 ms or more delay time will ensure the oscillator stabilized before the $\overline{RESET}$ goes high.

‡ P = 1/(input clock frequency) in ns. For example, when input clock is 12 MHz, P = 83.33 ns.

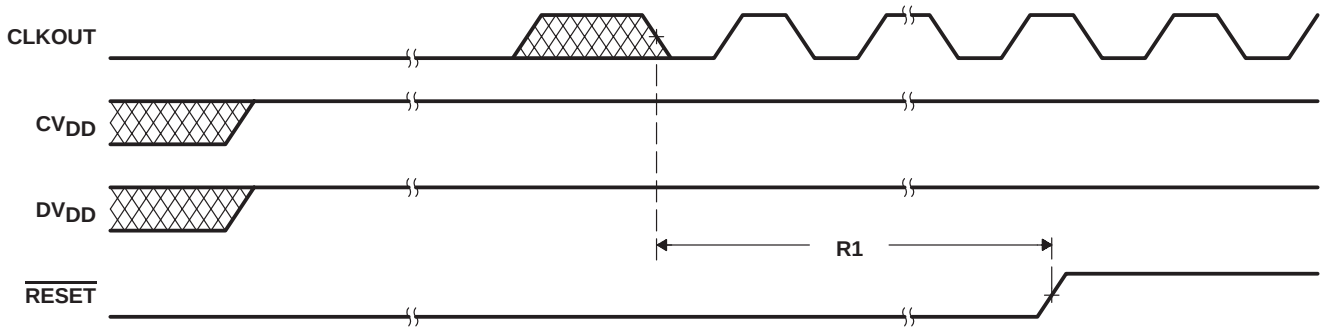

Figure 5−15. Power-Up Reset (On-Chip Oscillator Active) Timings

5.8.2 Power-Up Reset (On-Chip Oscillator Inactive)

Table 5−12 and Table 5−13 assume testing over recommended operating conditions (see Figure 5−16).

Table 5−12. Power-Up Reset (On-Chip Oscillator Inactive) Timing Requirements

NO.			CV_{DD} = 1.2 V CV_{DD} = 1.35 V		CV_{DD} = 1.6 V		UNIT
			MIN	MAX	MIN	MAX	
R2	$t_{h(CLKOUTV-RSTL)}$	Hold time, CLKOUT valid to $\overline{RESET}$ low	3P‡		3P‡		ns

‡ P = 1/(input clock frequency) in ns. For example, when input clock is 12 MHz, P = 83.33 ns.

Table 5−13. Power-Up Reset (On-Chip Oscillator Inactive) Switching Characteristics

NO.	PARAMETER		CV_{DD} = 1.2 V CV_{DD} = 1.35 V		CV_{DD} = 1.6 V		UNIT
			MIN	MAX	MIN	MAX	
R3	$t_{d(CLKINV-CLKOUTV)}$	Delay time, CLKIN valid to CLKOUT valid		30		30	ns

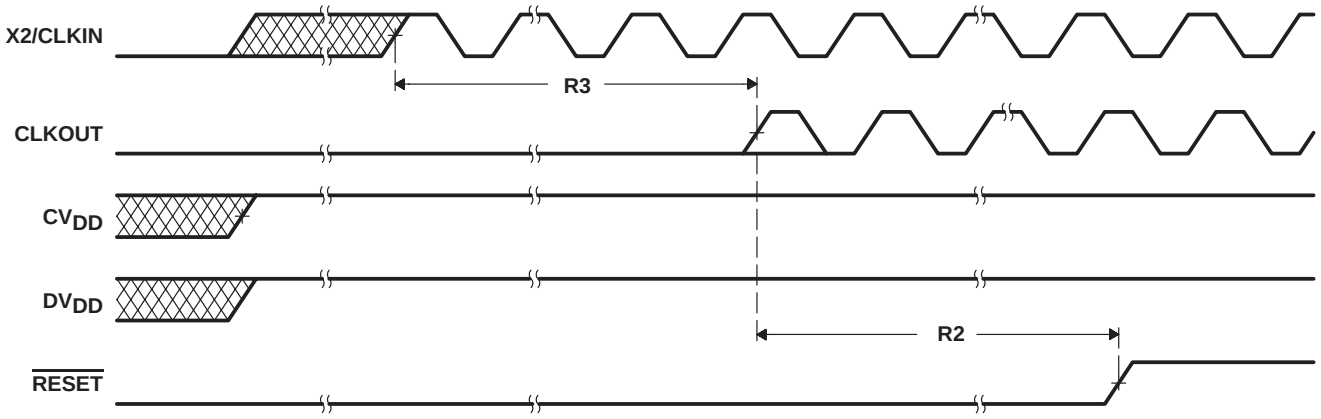

Figure 5−16. Power-Up Reset (On-Chip Oscillator Inactive) Timings

5.8.3 Warm Reset

Table 5−14 and Table 5−15 assume testing over recommended operating conditions (see Figure 5−17).

Table 5−14. Reset Timing Requirements

NO.			CV_{DD} = 1.2 V CV_{DD} = 1.35 V		CV_{DD} = 1.6 V		UNIT
			MIN	MAX	MIN	MAX	
R4	$t_{w(RSL)}$	Pulse width, reset low	3P†		3P†		ns

† P = 1/CPU clock frequency in ns. For example, when running parts at 200 MHz, use P = 5 ns.

Table 5−15. Reset Switching Characteristics†

NO.	PARAMETER		CV_{DD} = 1.2 V CV_{DD} = 1.35 V		CV_{DD} = 1.6 V		UNIT
			MIN	MAX	MIN	MAX	
R5	$t_{d(RSTH-BKV)}$	Delay time, reset high to BK group valid‡		38P + 15		38P + 15	ns
R6	$t_{d(RSTH-HIGHV)}$	Delay time, reset high to High group valid§		38P + 15		38P + 15	ns
R7	$t_{d(RSTL-ZIV)}$	Delay time, reset low to Z group invalid¶		1P + 15		1P + 15	ns
R8	$t_{d(RSTH-ZV)}$	Delay time, reset high to Z group valid¶		38P + 15		38P + 15	ns

† P = 1/CPU clock frequency in ns. For example, when CPU is running at 200 MHz, P = 5 ns.
‡ BK group: Pins with bus keepers, holds previous state during reset. Following low-to-high transition of $\overline{\text{RESET}}$, these pins go to their post-reset logic state.
BK group pins: A'[0], A[15:0], D[15:0], C[14:2], C0, GPIO5, S13, and S23
§ High group: Following low-to-high transition of $\overline{\text{RESET}}$, these pins go to logic-high state.
High group pins: C1[HPI.$\overline{\text{HINT}}$], XF
¶ Z group: Bidirectional pins which become input or output pins. Following low-to-high transition of $\overline{\text{RESET}}$, these pins go to high-impedance state.
Z group pins: C1[EMIF.AOE], GPIO[7:6, 4:0], TIN/TOUT0, SDA, SCL, CLKR0, FSRX0, CLKX0, DX0, FSX0, S[25:24, 22:20, 15:14, 12:10], A[20:16]

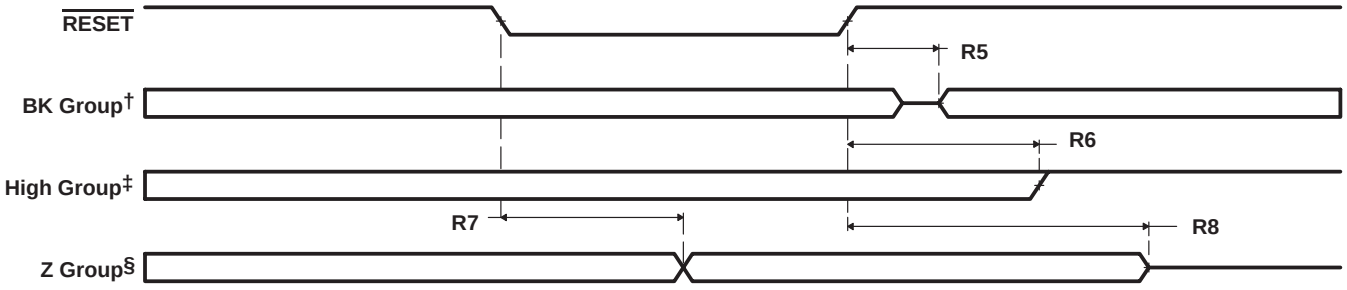

† BK group pins: A'[0], A[15:0], D[15:0], C[14:2], C0, GPIO5, S13, and S23
‡ High group pins: C1[HPI.$\overline{\text{HINT}}$], XF
§ Z group pins: C1[EMIF.AOE], GPIO[7:6, 4:0], TIN/TOUT0, SDA, SCL, CLKR0, FSRX0, CLKX0, DX0, FSX0, S[25:24, 22:20, 15:14, 12:10], A[20:16]

Figure 5−17. Reset Timings

5.9 External Interrupt Timings

Table 5−16 assumes testing over recommended operating conditions (see Figure 5−18).

Table 5−16. External Interrupt Timing Requirements†

NO.			CV_{DD} = 1.2 V CV_{DD} = 1.35 V		CV_{DD} = 1.6 V		UNIT
			MIN	MAX	MIN	MAX	
I1	$t_{w(INTH)A}$	Pulse width, interrupt high, CPU active	2P		2P		ns
I2	$t_{w(INTL)A}$	Pulse width, interrupt low, CPU active	3P		3P		ns

† P = 1/CPU clock frequency in ns. For example, when running parts at 200 MHz, use P = 5 ns.

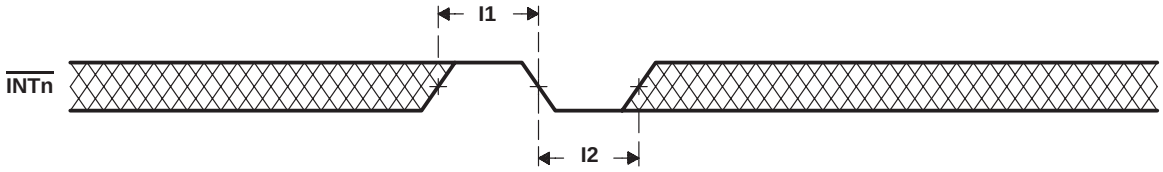

Figure 5−18. External Interrupt Timings

5.10 Wake-Up From IDLE

Table 5−17 assumes testing over recommended operating conditions (see Figure 5−19).

Table 5−17. Wake-Up From IDLE Switching Characteristics†

NO.	PARAMETER		CV_{DD} = 1.2 V CV_{DD} = 1.35 V			CV_{DD} = 1.6 V			UNIT
			MIN	TYP	MAX	MIN	TYP	MAX	
ID1	$t_{d(WKPEVTL-CLKGEN)}$	Delay time, wake-up event low to clock generation enable (CPU and clock domain idle)		1.25‡			1.25‡		ms
ID2	$t_{h(CLKGEN-WKPEVTL)}$	Hold time, clock generation enable to wake-up event low (CPU and clock domain in idle)	3P§			3P§			ns
ID3	$t_{w(WKPEVTL)}$	Pulse width, wake-up event low (for CPU idle only)	3P			3P			ns

† P = 1/CPU clock frequency in ns. For example, when running parts at 200 MHz, use P = 5 ns.

‡ Estimated data based on 12-MHz crystal used with on-chip oscillator at 25°C. This number will vary based on the actual crystal characteristics operating condition and the PC board layout and the parasitics.

§ Following the clock generation domain idle, the $\overline{INTx}$ becomes level-sensitive and stays that way until the low-to-high transition of $\overline{INTx}$ following the CPU wake-up. Holding the $\overline{INTx}$ low longer than minimum requirement will send more than one interrupt to the CPU. The number of interrupts sent to the CPU depends on the $\overline{INTx}$-low time following the CPU wake-up from IDLE.

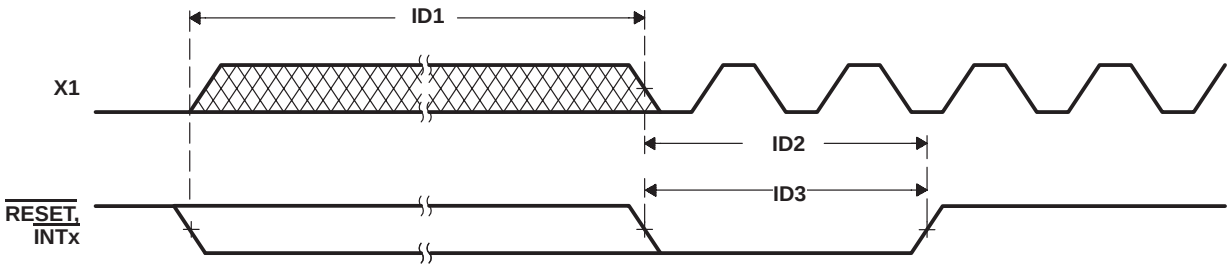

Figure 5−19. Wake-Up From IDLE Timings

5.11 XF Timings

Table 5−18 assumes testing over recommended operating conditions (see Figure 5−20).

Table 5−18. XF Switching Characteristics

NO.	PARAMETER		CV_{DD} = 1.2 V CV_{DD} = 1.35 V		CV_{DD} = 1.6 V		UNIT
			MIN	MAX	MIN	MAX	
X1	$t_{d(XF)}$	Delay time, CLKOUT high to XF high	−1	3	−1	3	ns
		Delay time, CLKOUT high to XF low	−1	3	−1	3	

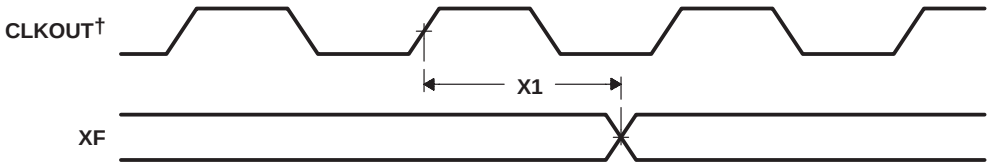

† CLKOUT reflects the CPU clock.

Figure 5−20. XF Timings

5.12 General-Purpose Input/Output (GPIOx) Timings

Table 5−19 and Table 5−20 assume testing over recommended operating conditions (see Figure 5−21).

Table 5−19. GPIO Pins Configured as Inputs Timing Requirements

NO.				CV_{DD} = 1.2 V CV_{DD} = 1.35 V		CV_{DD} = 1.6 V		UNIT
				MIN	MAX	MIN	MAX	
G1	$t_{su(GPIO-COH)}$	Setup time, IOx input valid before CLKOUT high	GPIO	4		4		ns
			AGPIO†	8		8		
			EHPIGPIO‡	8		8		
G2	$t_{h(COH-GPIO)}$	Hold time, IOx input valid after CLKOUT high	GPIO	0		0		ns
			AGPIO†	0		0		
			EHPIGPIO‡	0		0		

† AGPIO pins: A[15:0]
‡ EHPIGPIO pins: C13, C10, C7, C5, C4, and C0

Table 5−20. GPIO Pins Configured as Outputs Switching Characteristics

NO.	PARAMETER			CV_{DD} = 1.2 V CV_{DD} = 1.35 V		CV_{DD} = 1.6 V		UNIT
				MIN	MAX	MIN	MAX	
G3	$t_{d(COH-GPIO)}$	Delay time, CLKOUT high to IOx output change	GPIO	0	6	0	6	ns
			AGPIO†	0	11	0	11	
			EHPIGPIO‡	0	13	0	13	

† AGPIO pins: A[15:0]
‡ EHPIGPIO pins: C13, C10, C7, C5, C4, and C0

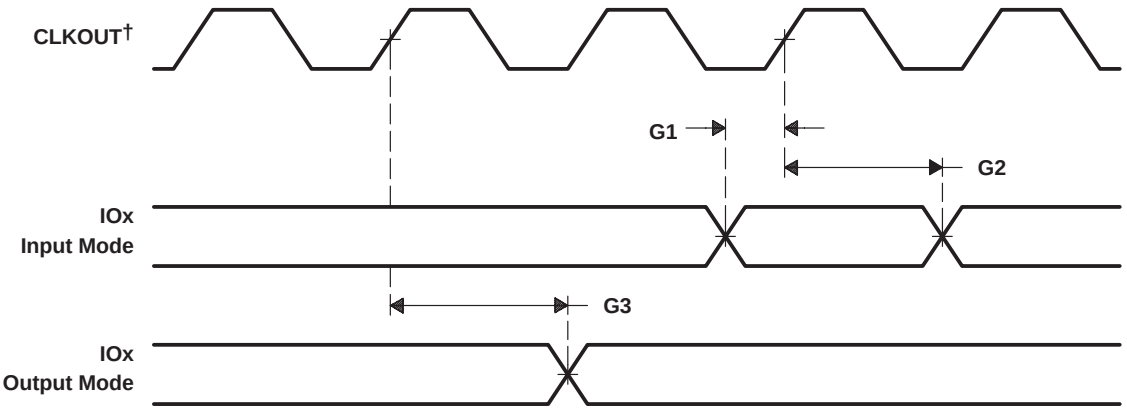

† CLKOUT reflects the CPU clock.

Figure 5−21. General-Purpose Input/Output (IOx) Signal Timings

5.13 TIN/TOUT Timings (Timer0 Only)

Table 5−21 and Table 5−22 assume testing over recommended operating conditions (see Figure 5−22 and Figure 5−23).

Table 5−21. TIN/TOUT Pins Configured as Inputs Timing Requirements†‡

NO.			CV_{DD} = 1.2 V CV_{DD} = 1.35 V		CV_{DD} = 1.6 V		UNIT
			MIN	MAX	MIN	MAX	
T4	$t_{w(TIN/TOUTL)}$	Pulse width, TIN/TOUT low	2P + 1		2P + 1		ns
T5	$t_{w(TIN/TOUTH)}$	Pulse width, TIN/TOUT high	2P + 1		2P + 1		ns

† P = 1/CPU clock frequency. For example, when running parts at 200 MHz, use P = 5 ns.
‡ Only the Timer0 signal is externally available. The Timer1 signal is internally terminated and is not available for external use.

Table 5−22. TIN/TOUT Pins Configured as Outputs Switching Characteristics†‡§

NO.	PARAMETER		CV_{DD} = 1.2 V CV_{DD} = 1.35 V		CV_{DD} = 1.6 V		UNIT
			MIN	MAX	MIN	MAX	
T1	$t_{d(COH-TIN/TOUTH)}$	Delay time, CLKOUT high to TIN/TOUT high	−1	3	−1	3	ns
T2	$t_{d(COH-TIN/TOUTL)}$	Delay time, CLKOUT high to TIN/TOUT low	−1	3	−1	3	ns
T3	$t_{w(TIN/TOUT)}$	Pulse duration, TIN/TOUT (output)	P − 1		P − 1		ns

† P = 1/CPU clock frequency. For example, when running parts at 200 MHz, use P = 5 ns.
‡ Only the Timer0 signal is externally available. The Timer1 signal is internally terminated and is not available for external use.
§ For proper operation of the TIN/TOUT pin configured as an output, the timer period must be configured for at least 4 cycles.

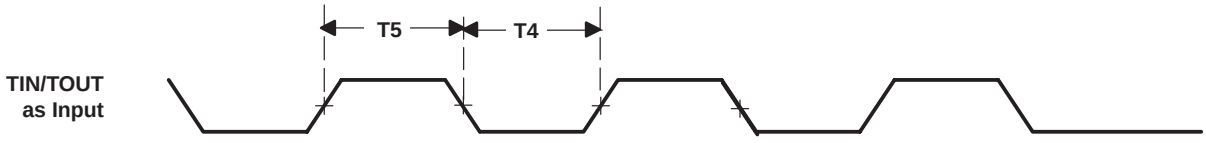

Figure 5−22. TIN/TOUT Timings When Configured as Inputs

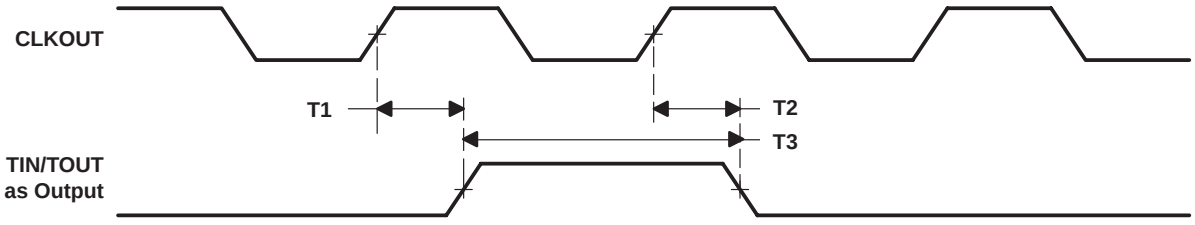

Figure 5−23. TIN/TOUT Timings When Configured as Outputs

5.14 Multichannel Buffered Serial Port (McBSP) Timings

5.14.1 McBSP0 Timings

Table 5−23 and Table 5−24 assume testing over recommended operating conditions (see Figure 5−24 and Figure 5−25).

Table 5−23. McBSP0 Timing Requirements†

NO.				CV_{DD} = 1.2 V CV_{DD} = 1.35 V		CV_{DD} = 1.6 V		UNIT
				MIN	MAX	MIN	MAX	
MC1	$t_{c(CKRX)}$	Cycle time, CLKR/X	CLKR/X ext	2P‡		2P‡		ns
MC2	$t_{w(CKRX)}$	Pulse duration, CLKR/X high or CLKR/X low	CLKR/X ext	P–1‡		P–1‡		ns
MC3	$t_{r(CKRX)}$	Rise time, CLKR/X	CLKR/X ext		6		6	ns
MC4	$t_{f(CKRX)}$	Fall time, CLKR/X	CLKR/X ext		6		6	ns
MC5	$t_{su(FRH-CKRL)}$	Setup time, external FSR high before CLKR low	CLKR int	10		7		ns
			CLKR ext	2		2		
MC6	$t_{h(CKRL-FRH)}$	Hold time, external FSR high after CLKR low	CLKR int	−3		−3		ns
			CLKR ext	1		1		
MC7	$t_{su(DRV-CKRL)}$	Setup time, DR valid before CLKR low	CLKR int	10		7		ns
			CLKR ext	2		2		
MC8	$t_{h(CKRL-DRV)}$	Hold time, DR valid after CLKR low	CLKR int	−2		−2		ns
			CLKR ext	3		3		
MC9	$t_{su(FXH-CKXL)}$	Setup time, external FSX high before CLKX low	CLKX int	13		8		ns
			CLKX ext	3		2		
MC10	$t_{h(CKXL-FXH)}$	Hold time, external FSX high after CLKX low	CLKX int	−3		−3		ns
			CLKX ext	1		1		

† Polarity bits CLKRP = CLKXP = FSRP = FSXP = 0. If the polarity of any of the signals is inverted, then the timing references of that signal are also inverted.

‡ P = 1/CPU clock frequency. For example, when running parts at 200 MHz, use P = 5 ns. In addition to CPU frequency, the maximum operating frequency of the serial port also depends on meeting the rest of the switching characteristics and timing requirements parameters specified.

Table 5−24. McBSP0 Switching Characteristics†‡

NO.	PARAMETER				CV_{DD} = 1.2 V CV_{DD} = 1.35 V		CV_{DD} = 1.6 V		UNIT
					MIN	MAX	MIN	MAX	
MC1	$t_{c(CKRX)}$	Cycle time, CLKR/X		CLKR/X int	2P		2P		ns
MC3	$t_{r(CKRX)}$	Rise time, CLKR/X		CLKR/X int		1		1	ns
MC4	$t_{f(CKRX)}$	Fall time, CLKR/X		CLKR/X int		1		1	ns
MC11	$t_{w(CKRXH)}$	Pulse duration, CLKR/X high		CLKR/X int	D−2§	D+2§	D−1§	D+1§	ns
MC12	$t_{w(CKRXL)}$	Pulse duration, CLKR/X low		CLKR/X int	C−2§	C+2§	C−1§	C+1§	ns
MC13	$t_{d(CKRH-FRV)}$	Delay time, CLKR high to internal FSR valid		CLKR int	−2	1	−2	1	ns
				CLKR ext	4	13	4	8	
MC14	$t_{d(CKXH-FXV)}$	Delay time, CLKX high to internal FSX valid		CLKX int	−2	2	−2	2	ns
				CLKX ext	4	15	4	9	
MC15	$t_{dis(CKXH-DXHZ)}$	Disable time, DX high-impedance from CLKX high following last data bit		CLKX int	0	5	−5	1	ns
				CLKX ext	10	18	3	11	
MC16	$t_{d(CKXH-DXV)}$	Delay time, CLKX high to DX valid. This applies to all bits except the first bit transmitted.		CLKX int		5		4	ns
				CLKX ext		15		9	
		Delay time, CLKX high to DX valid¶ Only applies to first bit transmitted when in Data Delay 1 or 2 (XDATDLY = 01b or 10b) modes	DXENA = 0	CLKX int		4		2	
				CLKX ext		13		7	
			DXENA = 1	CLKX int		2P + 1		2P + 1	
				CLKX ext		2P + 4		2P + 3	
MC17	$t_{en(CKXH-DX)}$	Enable time, DX driven from CLKX high¶ Only applies to first bit transmitted when in Data Delay 1 or 2 (XDATDLY= 01b or 10b) modes	DXENA = 0	CLKX int	−1		−3		ns
				CLKX ext	6		3		
			DXENA = 1	CLKX int	P − 1		P − 3		
				CLKX ext	P + 6		P + 3		
MC18	$t_{d(FXH-DXV)}$	Delay time, FSX high to DX valid¶ Only applies to first bit transmitted when in Data Delay 0 (XDATDLY= 00b) mode.	DXENA = 0	FSX int		2		2	ns
				FSX ext		13		8	
			DXENA = 1	FSX int		2P + 1		2P + 1	
				FSX ext		2P + 10		2P + 10	
MC19	$t_{en(FXH-DX)}$	Enable time, DX driven from FSX high¶ Only applies to first bit transmitted when in Data Delay 0 (XDATDLY= 00b) mode	DXENA = 0	FSX int	0		0		ns
				FSX ext	8		3		
			DXENA = 1	FSX int	P − 3		P − 3		
				FSX ext	P + 8		P + 4		

† Polarity bits CLKRP = CLKXP = FSRP = FSXP = 0. If the polarity of any of the signals is inverted, then the timing references of that signal are also inverted.

‡ P = 1/CPU clock frequency. For example, when running parts at 200 MHz, use P = 5 ns. In addition to CPU frequency, the maximum operating frequency of the serial port also depends on meeting the rest of the switching characteristics and timing requirements parameters specified.

§ T=CLKRX period = (1 + CLKGDV) * P
C=CLKRX low pulse width = T/2 when CLKGDV is odd or zero and = (CLKGDV/2) * P when CLKGDV is even
D=CLKRX high pulse width = T/2 when CLKGDV is odd or zero and = (CLKGDV/2 + 1) * P when CLKGDV is even

¶ See the *TMS320C55x DSP Peripherals Overview Reference Guide* (literature number SPRU317) for a description of the DX enable (DXENA) and data delay features of the McBSP.

5.14.2 McBSP1 and McBSP2 Timings

Table 5−25 and Table 5−26 assume testing over recommended operating conditions (see Figure 5−24 and Figure 5−25).

Table 5−25. McBSP1 and McBSP2 Timing Requirements†

NO.				CV_{DD} = 1.2 V CV_{DD} = 1.35 V		CV_{DD} = 1.6 V		UNIT
				MIN	MAX	MIN	MAX	
MC1	$t_{c(CKRX)}$	Cycle time, CLKR/X	CLKR/X ext	2P‡		2P‡		ns
MC2	$t_{w(CKRX)}$	Pulse duration, CLKR/X high or CLKR/X low	CLKR/X ext	P–1‡		P–1‡		ns
MC3	$t_{r(CKRX)}$	Rise time, CLKR/X	CLKR/X ext		6		6	ns
MC4	$t_{f(CKRX)}$	Fall time, CLKR/X	CLKR/X ext		6		6	ns
MC5	$t_{su(FRH-CKRL)}$	Setup time, external FSR high before CLKR low	CLKR int	11		7		ns
			CLKR ext	3		3		
MC6	$t_{h(CKRL-FRH)}$	Hold time, external FSR high after CLKR low	CLKR int	−3		−3		ns
			CLKR ext	1		1		
MC7	$t_{su(DRV-CKRL)}$	Setup time, DR valid before CLKR low	CLKR int	11		7		ns
			CLKR ext	3		3		
MC8	$t_{h(CKRL-DRV)}$	Hold time, DR valid after CLKR low	CLKR int	−2		−2		ns
			CLKR ext	3		3		
MC9	$t_{su(FXH-CKXL)}$	Setup time, external FSX high before CLKX low	CLKX int	14		9		ns
			CLKX ext	4		3		
MC10	$t_{h(CKXL-FXH)}$	Hold time, external FSX high after CLKX low	CLKX int	−3		−3		ns
			CLKX ext	1		1		

† Polarity bits CLKRP = CLKXP = FSRP = FSXP = 0. If the polarity of any of the signals is inverted, then the timing references of that signal are also inverted.

‡ P = 1/CPU clock frequency. For example, when running parts at 200 MHz, use P = 5 ns. In addition to CPU frequency, the maximum operating frequency of the serial port also depends on meeting the rest of the switching characteristics and timing requirements parameters specified.

Table 5−26. McBSP1 and McBSP2 Switching Characteristics†‡

NO.	PARAMETER				CV_{DD} = 1.2 V CV_{DD} = 1.35 V		CV_{DD} = 1.6 V		UNIT
					MIN	MAX	MIN	MAX	
MC1	$t_{c(CKRX)}$	Cycle time, CLKR/X		CLKR/X int	2P		2P		ns
MC3	$t_{r(CKRX)}$	Rise time, CLKR/X		CLKR/X int		2		2	ns
MC4	$t_{f(CKRX)}$	Fall time, CLKR/X		CLKR/X int		2		2	ns
MC11	$t_{w(CKRXH)}$	Pulse duration, CLKR/X high		CLKR/X int	D − 2§	D + 2§	D − 2§	D + 2§	ns
MC12	$t_{w(CKRXL)}$	Pulse duration, CLKR/X low		CLKR/X int	C − 2§	C + 2§	C − 2§	C + 2§	ns
MC13	$t_{d(CKRH-FRV)}$	Delay time, CLKR high to internal FSR valid		CLKR int	−3	2	−3	2	ns
				CLKR ext	3	14	3	9	
MC14	$t_{d(CKXH-FXV)}$	Delay time, CLKX high to internal FSX valid		CLKX int	−3	2	−3	2	ns
				CLKX ext	4	15	4	9	
MC15	$t_{dis(CKXH-DXHZ)}$	Disable time, DX high-impedance from CLKX high following last data bit		CLKX int	−3	3	−5	1	ns
				CLKX ext	10	19	3	12	
MC16	$t_{d(CKXH-DXV)}$	Delay time, CLKX high to DX valid. This applies to all bits except the first bit transmitted.		CLKX int		5		3	ns
				CLKX ext		15		9	
		Delay time, CLKX high to DX valid¶ Only applies to first bit transmitted when in Data Delay 1 or 2 (XDATDLY= 01b or 10b) modes	DXENA = 0	CLKX int		4		2	
				CLKX ext		15		9	
			DXENA = 1	CLKX int		2P + 1		2P + 1	
				CLKX ext		2P + 5		2P + 3	
MC17	$t_{en(CKXH-DX)}$	Enable time, DX driven from CLKX high¶ Only applies to first bit transmitted when in Data Delay 1 or 2 (XDATDLY= 01b or 10b) modes	DXENA = 0	CLKX int	−2		−4		ns
				CLKX ext	9		4		
			DXENA = 1	CLKX int	P − 2		P − 4		
				CLKX ext	P + 9		P + 4		
MC18	$t_{d(FXH-DXV)}$	Delay time, FSX high to DX valid¶ Only applies to first bit transmitted when in Data Delay 0 (XDATDLY=00b) mode.	DXENA = 0	FSX int		3		2	ns
				FSX ext		13		8	
			DXENA = 1	FSX int		2P + 1		2P + 1	
				FSX ext		2P + 12		2P + 7	
MC19	$t_{en(FXH-DX)}$	Enable time, DX driven from FSX high¶ Only applies to first bit transmitted when in Data Delay 0 (XDATDLY=00b) mode	DXENA = 0	FSX int	1		0		ns
				FSX ext	8		4		
			DXENA = 1	FSX int	P − 1		P − 3		
				FSX ext	P + 8		P + 5		

† Polarity bits CLKRP = CLKXP = FSRP = FSXP = 0. If the polarity of any of the signals is inverted, then the timing references of that signal are also inverted.

‡ P = 1/CPU clock frequency. For example, when running parts at 200 MHz, use P = 5 ns. In addition to CPU frequency, the maximum operating frequency of the serial port also depends on meeting the rest of the switching characteristics and timing requirements parameters specified.

§ T=CLKRX period = (1 + CLKGDV) * P
C=CLKRX low pulse width = T/2 when CLKGDV is odd or zero and = (CLKGDV/2) * P when CLKGDV is even
D=CLKRX high pulse width = T/2 when CLKGDV is odd or zero and = (CLKGDV/2 + 1) * P when CLKGDV is even

¶ See the *TMS320C55x DSP Peripherals Overview Reference Guide* (literature number SPRU317) for a description of the DX enable (DXENA) and data delay features of the McBSP.

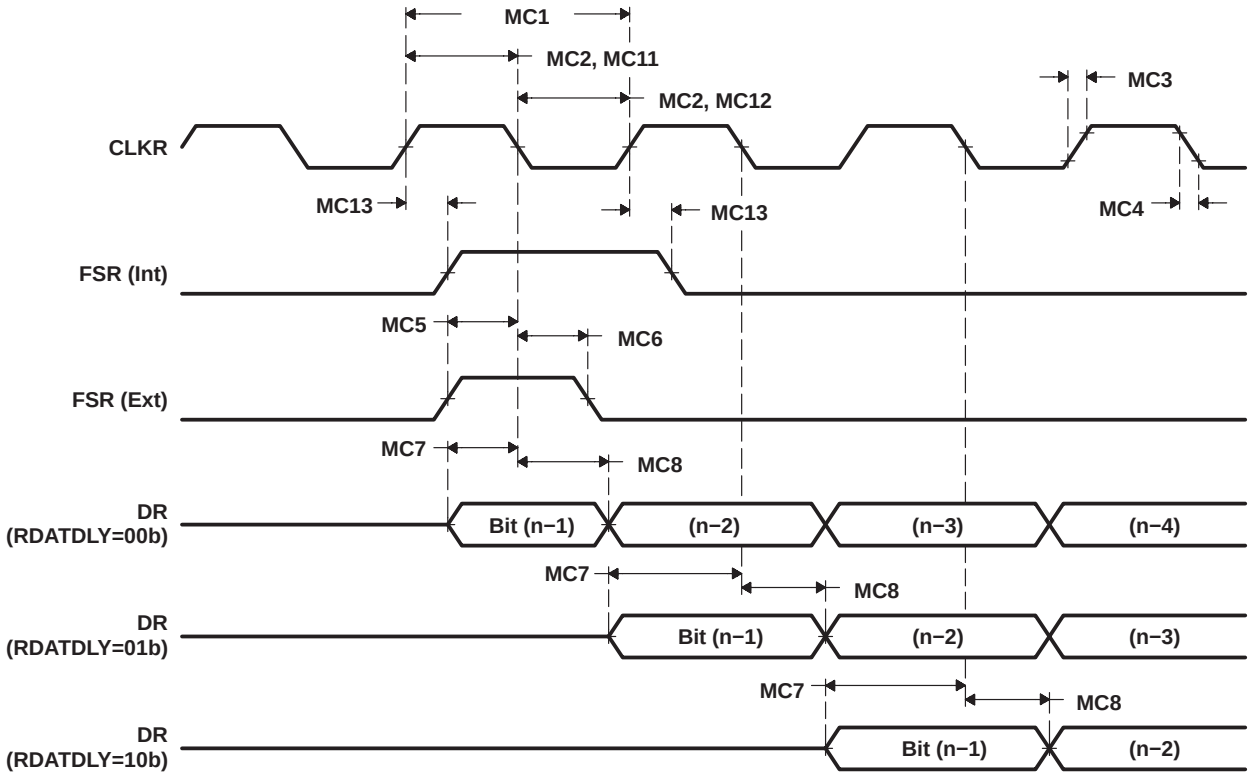

Figure 5−24. McBSP Receive Timings

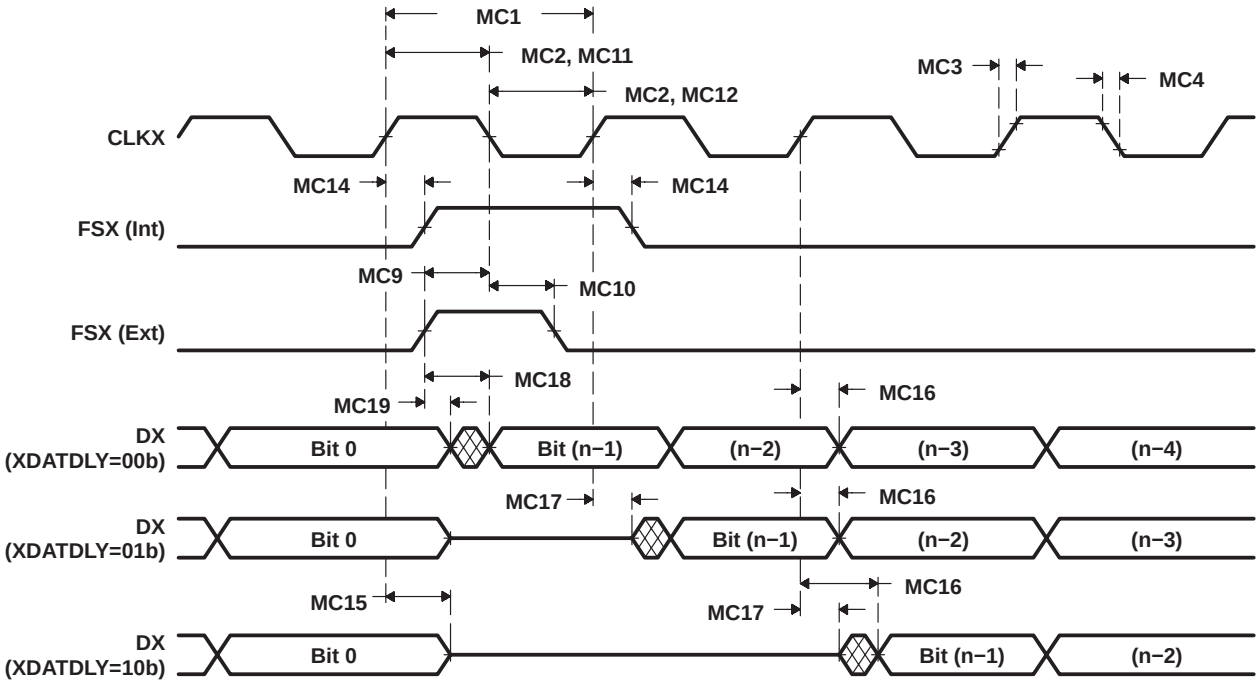

Figure 5−25. McBSP Transmit Timings

5.14.3 McBSP as SPI Master or Slave Timings

Table 5−27 to Table 5−34 assume testing over recommended operating conditions (see Figure 5−26 through Figure 5−29).

Table 5−27. McBSP as SPI Master or Slave Timing Requirements (CLKSTP = 10b, CLKXP = 0)†‡

NO.			CV_{DD} = 1.2 V CV_{DD} = 1.35 V				CV_{DD} = 1.6 V				UNIT
			MASTER		SLAVE		MASTER		SLAVE		
			MIN	MAX	MIN	MAX	MIN	MAX	MIN	MAX	
MC23	$t_{su(DRV-CKXL)}$	Setup time, DR valid before CLKX low	15		3 − 6P		10		3 − 6P		ns
MC24	$t_{h(CKXL-DRV)}$	Hold time, DR valid after CLKX low	0		3 + 6P		0		3 + 6P		ns
MC25	$t_{su(FXL-CKXH)}$	Setup time, FSX low before CLKX high			5				5		ns
MC26	$t_{c(CKX)}$	Cycle time, CLKX	2P		16P		2P		16P		ns

† For all SPI slave modes, CLKG is programmed as 1/2 of the CPU clock by setting CLKSM = CLKGDV = 1.
‡ P = 1/CPU clock frequency. For example, when running parts at 200 MHz, use P = 5 ns. In addition to CPU frequency, the maximum operating frequency of the serial port also depends on meeting the rest of the switching characteristics and timing requirements parameters specified.

Table 5−28. McBSP as SPI Master or Slave Switching Characteristics (CLKSTP = 10b, CLKXP = 0)†‡

NO.	PARAMETER		CV_{DD} = 1.2 V CV_{DD} = 1.35 V				CV_{DD} = 1.6 V				UNIT
			MASTER§		SLAVE		MASTER§		SLAVE		
			MIN	MAX	MIN	MAX	MIN	MAX	MIN	MAX	
MC27	$t_{d(CKXL-FXL)}$	Delay time, CLKX low to FSX low¶	T − 5	T + 5			T − 4	T + 4			ns
MC28	$t_{d(FXL-CKXH)}$	Delay time, FSX low to CLKX high#	C − 5	C + 5			C − 4	C + 4			ns
MC29	$t_{d(CKXH-DXV)}$	Delay time, CLKX high to DX valid	−4	6	3P + 3	5P + 15	−3	3	3P + 3	5P + 8	ns
MC30	$t_{dis(CKXL-DXHZ)}$	Disable time, DX high-impedance following last data bit from CLKX low	C − 4	C + 4			C − 3	C + 1			ns
MC31	$t_{dis(FXH-DXHZ)}$	Disable time, DX high-impedance following last data bit from FSX high			3P+ 4	3P + 19			3P+ 3	3P + 11	ns
MC32	$t_{d(FXL-DXV)}$	Delay time, FSX low to DX valid			3P + 4	3P + 18			3P + 4	3P + 10	ns

† For all SPI slave modes, CLKG is programmed as 1/2 of the CPU clock by setting CLKSM = CLKGDV = 1.
‡ P = 1/CPU clock frequency. For example, when running parts at 200 MHz, use P = 5 ns. In addition to CPU frequency, the maximum operating frequency of the serial port also depends on meeting the rest of the switching characteristics and timing requirements parameters specified.
§ T = CLKX period = (1 + CLKGDV) * 2P
C = CLKX low pulse width = T/2 when CLKGDV is odd or zero and = (CLKGDV/2) * 2P when CLKGDV is even
¶ FSRP = FSXP = 1. As a SPI master, FSX is inverted to provide active-low slave-enable output. As a slave, the active-low signal input on FSX and FSR is inverted before being used internally.
CLKXM = FSXM = 1, CLKRM = FSRM = 0 for master McBSP
CLKXM = CLKRM = FSXM = FSRM = 0 for slave McBSP
# FSX should be low before the rising edge of clock to enable slave devices and then begin a SPI transfer at the rising edge of the master clock (CLKX).

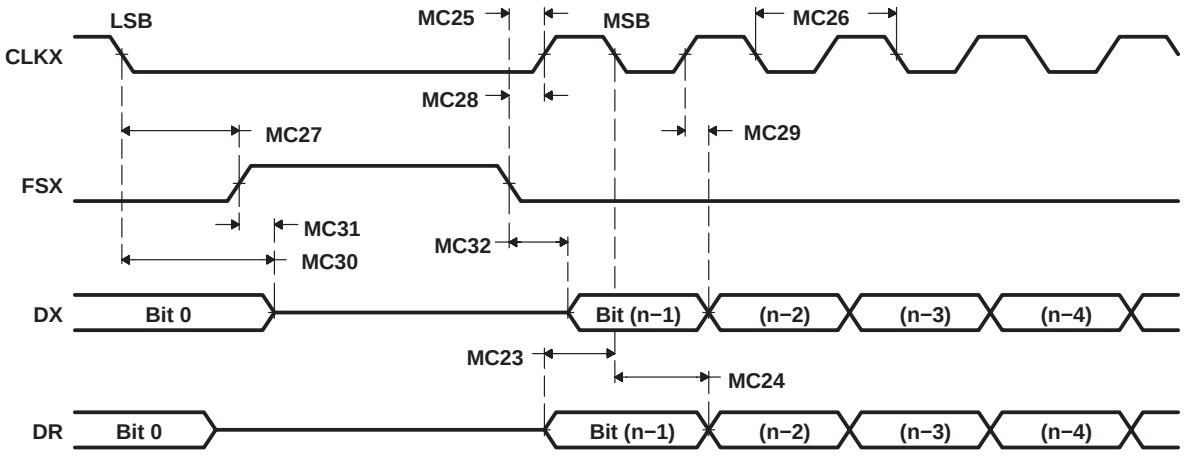

Figure 5−26. McBSP Timings as SPI Master or Slave: CLKSTP = 10b, CLKXP = 0

Table 5−29. McBSP as SPI Master or Slave Timing Requirements (CLKSTP = 11b, CLKXP = 0)†‡

NO.			CV_{DD} = 1.2 V CV_{DD} = 1.35 V				CV_{DD} = 1.6 V				UNIT
			MASTER		SLAVE		MASTER		SLAVE		
			MIN	MAX	MIN	MAX	MIN	MAX	MIN	MAX	
MC33	$t_{su(DRV-CKXH)}$	Setup time, DR valid before CLKX high	15		3 − 6P		10		3 − 6P		ns
MC34	$t_{h(CKXH-DRV)}$	Hold time, DR valid after CLKX high	0		3 + 6P		0		3 + 6P		ns
MC25	$t_{su(FXL-CKXH)}$	Setup time, FSX low before CLKX high			5				5		ns
MC26	$t_{c(CKX)}$	Cycle time, CLKX	2P		16P		2P		16P		ns

† For all SPI slave modes, CLKG is programmed as 1/2 of the CPU clock by setting CLKSM = CLKGDV = 1.
‡ P = 1/CPU clock frequency. For example, when running parts at 200 MHz, use P = 5 ns. In addition to CPU frequency, the maximum operating frequency of the serial port also depends on meeting the rest of the switching characteristics and timing requirements parameters specified.

Table 5−30. McBSP as SPI Master or Slave Switching Characteristics (CLKSTP = 11b, CLKXP = 0)†‡

NO.	PARAMETER		CV_{DD} = 1.2 V CV_{DD} = 1.35 V				CV_{DD} = 1.6 V				UNIT
			MASTER§		SLAVE		MASTER§		SLAVE		
			MIN	MAX	MIN	MAX	MIN	MAX	MIN	MAX	
MC27	$t_{d(CKXL-FXL)}$	Delay time, CLKX low to FSX low¶	C − 5	C + 5			C − 4	C + 4			ns
MC28	$t_{d(FXL-CKXH)}$	Delay time, FSX low to CLKX high#	T − 5	T + 5			T − 4	T + 4			ns
MC35	$t_{d(CKXL-DXV)}$	Delay time, CLKX low to DX valid	−4	6	3P + 3	5P + 15	−3	3	3P + 3	5P + 8	ns
MC30	$t_{dis(CKXL-DXHZ)}$	Disable time, DX high-impedance following last data bit from CLKX low	−4	4	3P + 4	3P + 19	−3	1	3P + 3	3P + 12	ns
MC32	$t_{d(FXL-DXV)}$	Delay time, FSX low to DX valid	D − 4	D + 4	3P + 4	3P + 18	D − 3	D + 3	3P + 4	3P + 10	ns

† For all SPI slave modes, CLKG is programmed as 1/2 of the CPU clock by setting CLKSM = CLKGDV = 1.
‡ P = 1/CPU clock frequency. For example, when running parts at 200 MHz, use P = 5 ns. In addition to CPU frequency, the maximum operating frequency of the serial port also depends on meeting the rest of the switching characteristics and timing requirements parameters specified.
§ T = CLKX period = (1 + CLKGDV) * P
C = CLKX low pulse width = T/2 when CLKGDV is odd or zero and = (CLKGDV/2) * P when CLKGDV is even
D = CLKX high pulse width = T/2 when CLKGDV is odd or zero and = (CLKGDV/2 + 1) * P when CLKGDV is even
¶ FSRP = FSXP = 1. As a SPI master, FSX is inverted to provide active-low slave-enable output. As a slave, the active-low signal input on FSX and FSR is inverted before being used internally.
CLKXM = FSXM = 1, CLKRM = FSRM = 0 for master McBSP
CLKXM = CLKRM = FSXM = FSRM = 0 for slave McBSP
# FSX should be low before the rising edge of clock to enable slave devices and then begin a SPI transfer at the rising edge of the master clock (CLKX).

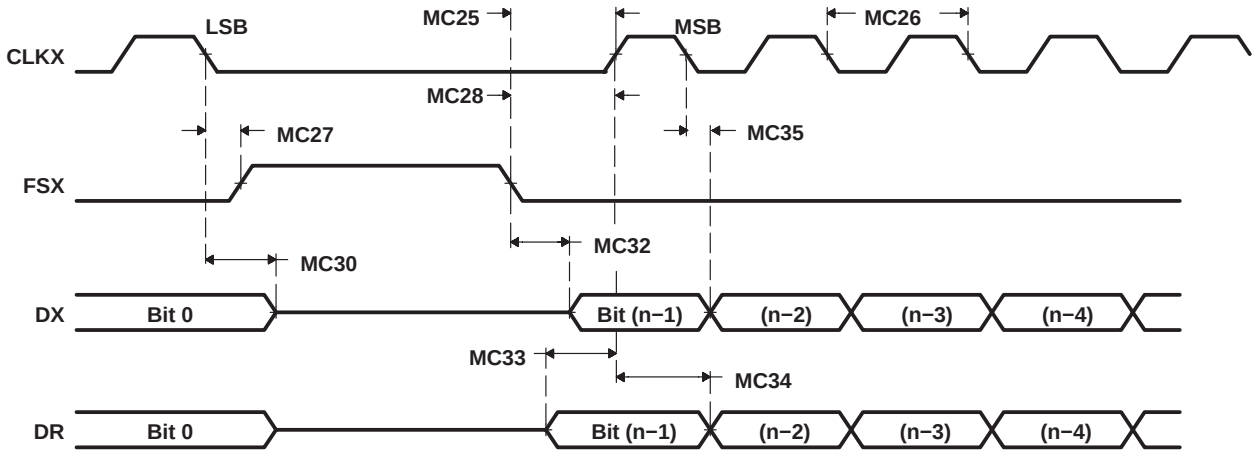

Figure 5−27. McBSP Timings as SPI Master or Slave: CLKSTP = 11b, CLKXP = 0

Table 5−31. McBSP as SPI Master or Slave Timing Requirements (CLKSTP = 10b, CLKXP = 1)†‡

NO.			CV_{DD} = 1.2 V CV_{DD} = 1.35 V				CV_{DD} = 1.6 V				UNIT
			MASTER		SLAVE		MASTER		SLAVE		
			MIN	MAX	MIN	MAX	MIN	MAX	MIN	MAX	
MC33	$t_{su(DRV-CKXH)}$	Setup time, DR valid before CLKX high	15		3 − 6P		10		3 − 6P		ns
MC34	$t_{h(CKXH-DRV)}$	Hold time, DR valid after CLKX high	0		3 + 6P		0		3 + 6P		ns
MC36	$t_{su(FXL-CKXL)}$	Setup time, FSX low before CLKX low			5				5		ns
MC26	$t_{c(CKX)}$	Cycle time, CLKX	2P		16P		2P		16P		ns

† For all SPI slave modes, CLKG is programmed as 1/2 of the CPU clock by setting CLKSM = CLKGDV = 1.
‡ P = 1/CPU clock frequency. For example, when running parts at 200 MHz, use P = 5 ns. In addition to CPU frequency, the maximum operating frequency of the serial port also depends on meeting the rest of the switching characteristics and timing requirements parameters specified.

Table 5−32. McBSP as SPI Master or Slave Switching Characteristics (CLKSTP = 10b, CLKXP = 1)†‡

NO.	PARAMETER		CV_{DD} = 1.2 V CV_{DD} = 1.35 V				CV_{DD} = 1.6 V				UNIT
			MASTER§		SLAVE		MASTER§		SLAVE		
			MIN	MAX	MIN	MAX	MIN	MAX	MIN	MAX	
MC37	$t_{d(CKXH-FXL)}$	Delay time, CLKX high to FSX low¶	T − 5	T + 5			T − 4	T + 4			ns
MC38	$t_{d(FXL-CKXL)}$	Delay time, FSX low to CLKX low#	D − 5	D + 5			D − 4	D + 4			ns
MC35	$t_{d(CKXL-DXV)}$	Delay time, CLKX low to DX valid	−4	6	3P + 3	5P + 15	−3	3	3P + 3	5P + 8	ns
MC39	$t_{dis(CKXH-DXHZ)}$	Disable time, DX high-impedance following last data bit from CLKX high	D − 4	D + 4			D − 3	D + 1			ns
MC31	$t_{dis(FXH-DXHZ)}$	Disable time, DX high-impedance following last data bit from FSX high			3P + 4	3P +19			3P + 3	3P +11	ns
MC32	$t_{d(FXL-DXV)}$	Delay time, FSX low to DX valid			3P + 4	3P + 18			3P + 4	3P + 10	ns

† For all SPI slave modes, CLKG is programmed as 1/2 of the CPU clock by setting CLKSM = CLKGDV = 1.
‡ P = 1/CPU clock frequency. For example, when running parts at 200 MHz, use P = 5 ns. In addition to CPU frequency, the maximum operating frequency of the serial port also depends on meeting the rest of the switching characteristics and timing requirements parameters specified.
§ T = CLKX period = (1 + CLKGDV) * P
C = CLKX low pulse width = T/2 when CLKGDV is odd or zero and = (CLKGDV/2) * P when CLKGDV is even
D = CLKX high pulse width = T/2 when CLKGDV is odd or zero and = (CLKGDV/2 + 1) * P when CLKGDV is even
¶ FSRP = FSXP = 1. As a SPI master, FSX is inverted to provide active-low slave-enable output. As a slave, the active-low signal input on FSX and FSR is inverted before being used internally.
CLKXM = FSXM = 1, CLKRM = FSRM = 0 for master McBSP
CLKXM = CLKRM = FSXM = FSRM = 0 for slave McBSP
# FSX should be low before the rising edge of clock to enable slave devices and then begin a SPI transfer at the rising edge of the master clock (CLKX).

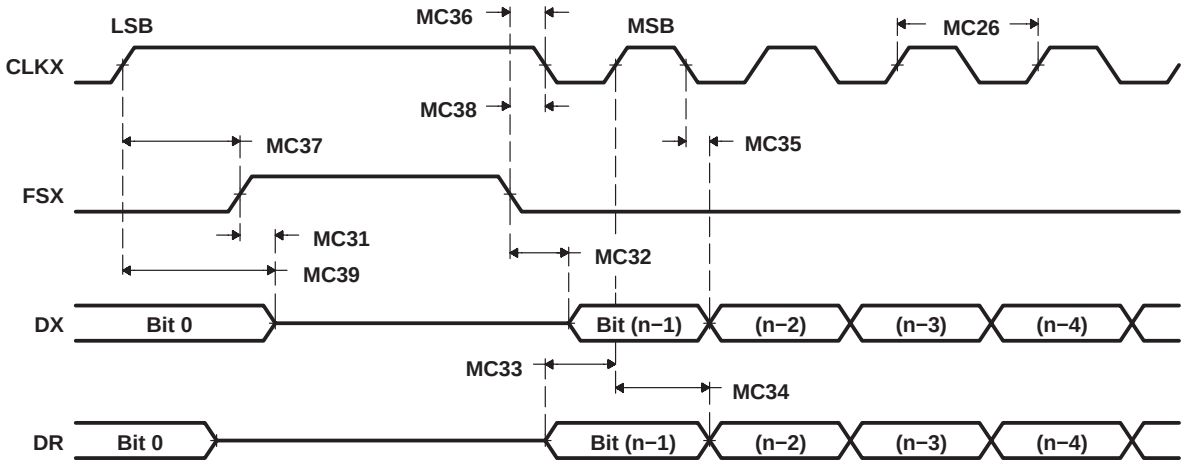

Figure 5−28. McBSP Timings as SPI Master or Slave: CLKSTP = 10b, CLKXP = 1

Table 5−33. McBSP as SPI Master or Slave Timing Requirements (CLKSTP = 11b, CLKXP = 1)†‡

NO.			CV_{DD} = 1.2 V CV_{DD} = 1.35 V				CV_{DD} = 1.6 V				UNIT
			MASTER		SLAVE		MASTER		SLAVE		
			MIN	MAX	MIN	MAX	MIN	MAX	MIN	MAX	
MC23	$t_{su(DRV-CKXL)}$	Setup time, DR valid before CLKX low	15		3 − 6P		10		3 − 6P		ns
MC24	$t_{h(CKXL-DRV)}$	Hold time, DR valid after CLKX low	0		3 + 6P		0		3 + 6P		ns
MC36	$t_{su(FXL-CKXL)}$	Setup time, FSX low before CLKX low			5				5		ns
MC26	$t_{c(CKX)}$	Cycle time, CLKX	2P		16P		2P		16P		ns

† For all SPI slave modes, CLKG is programmed as 1/2 of the CPU clock by setting CLKSM = CLKGDV = 1.
‡ P = 1/CPU clock frequency. For example, when running parts at 200 MHz, use P = 5 ns. In addition to CPU frequency, the maximum operating frequency of the serial port also depends on meeting the rest of the switching characteristics and timing requirements parameters specified.

Table 5−34. McBSP as SPI Master or Slave Switching Characteristics (CLKSTP = 11b, CLKXP = 1)†‡

NO.	PARAMETER		CV_{DD} = 1.2 V CV_{DD} = 1.35 V				CV_{DD} = 1.6 V				UNIT
			MASTER§		SLAVE		MASTER§		SLAVE		
			MIN	MAX	MIN	MAX	MIN	MAX	MIN	MAX	
MC37	$t_{d(CKXH-FXL)}$	Delay time, CLKX high to FSX low¶	D − 5	D + 5			D − 4	D + 4			ns
MC38	$t_{d(FXL-CKXL)}$	Delay time, FSX low to CLKX low#	T − 5	T + 5			T − 4	T + 4			ns
MC29	$t_{d(CKXH-DXV)}$	Delay time, CLKX high to DX valid	−4	6	3P + 3	5P + 15	−3	3	3P + 3	5P + 8	ns
MC39	$t_{dis(CKXH-DXHZ)}$	Disable time, DX high-impedance following last data bit from CLKX high	−4	4	3P + 4	3P + 19	−3	1	3P + 3	3P + 12	ns
MC32	$t_{d(FXL-DXV)}$	Delay time, FSX low to DX valid	C − 4	C + 4	3P + 4	3P + 18	C − 3	C + 3	3P + 4	3P + 10	ns

† For all SPI slave modes, CLKG is programmed as 1/2 of the CPU clock by setting CLKSM = CLKGDV = 1.
‡ P = 1/CPU clock frequency. For example, when running parts at 200 MHz, use P = 5 ns. In addition to CPU frequency, the maximum operating frequency of the serial port also depends on meeting the rest of the switching characteristics and timing requirements parameters specified.
§ T = CLKX period = (1 + CLKGDV) * P
C = CLKX low pulse width = T/2 when CLKGDV is odd or zero and = (CLKGDV/2) * P when CLKGDV is even
D = CLKX high pulse width = T/2 when CLKGDV is odd or zero and = (CLKGDV/2 + 1) * P when CLKGDV is even
¶ FSRP = FSXP = 1. As a SPI master, FSX is inverted to provide active-low slave-enable output. As a slave, the active-low signal input on FSX and FSR is inverted before being used internally.
CLKXM = FSXM = 1, CLKRM = FSRM = 0 for master McBSP
CLKXM = CLKRM = FSXM = FSRM = 0 for slave McBSP
# FSX should be low before the rising edge of clock to enable slave devices and then begin a SPI transfer at the rising edge of the master clock (CLKX).

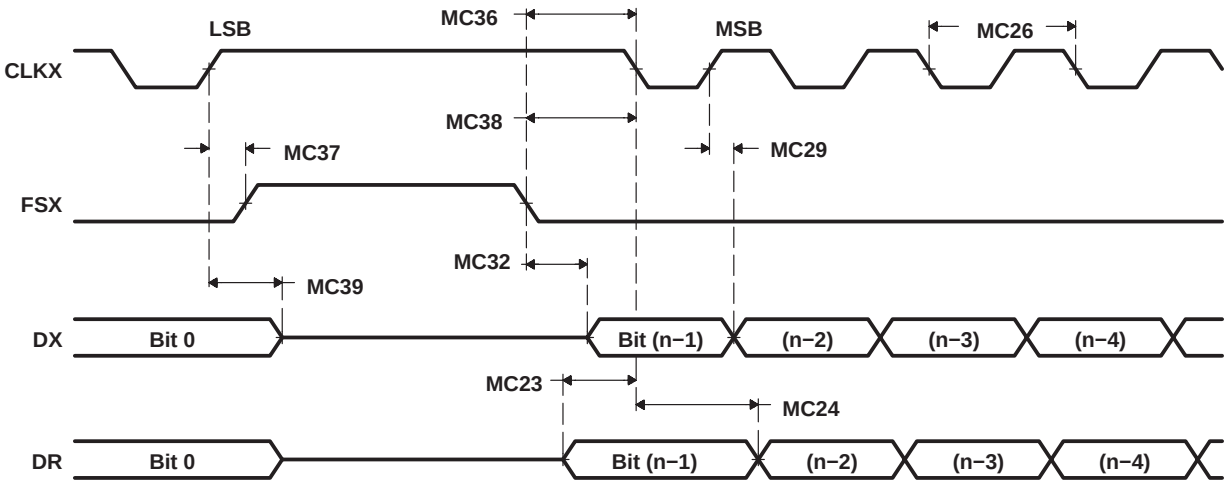

Figure 5−29. McBSP Timings as SPI Master or Slave: CLKSTP = 11b, CLKXP = 1

5.14.4 McBSP General-Purpose I/O Timings

Table 5−35 and Table 5−36 assume testing over recommended operating conditions (see Figure 5−30).

Table 5−35. McBSP General-Purpose I/O Timing Requirements

NO.			CV_{DD} = 1.2 V CV_{DD} = 1.35 V		CV_{DD} = 1.6 V		UNIT
			MIN	MAX	MIN	MAX	
MC20	$t_{su(MGPIO-COH)}$	Setup time, MGPIOx input mode before CLKOUT high†	7		7		ns
MC21	$t_{h(COH-MGPIO)}$	Hold time, MGPIOx input mode after CLKOUT high†	0		0		ns

† MGPIOx refers to CLKRx, FSRx, DRx, CLKXx, or FSXx when configured as a general-purpose input.

Table 5−36. McBSP General-Purpose I/O Switching Characteristics

NO.	PARAMETER		CV_{DD} = 1.2 V CV_{DD} = 1.35 V		CV_{DD} = 1.6 V		UNIT
			MIN	MAX	MIN	MAX	
MC22	$t_{d(COH-MGPIO)}$	Delay time, CLKOUT high to MGPIOx output mode‡	0	7	0	7	ns

‡ MGPIOx refers to CLKRx, FSRx, CLKXx, FSXx, or DXx when configured as a general-purpose output.

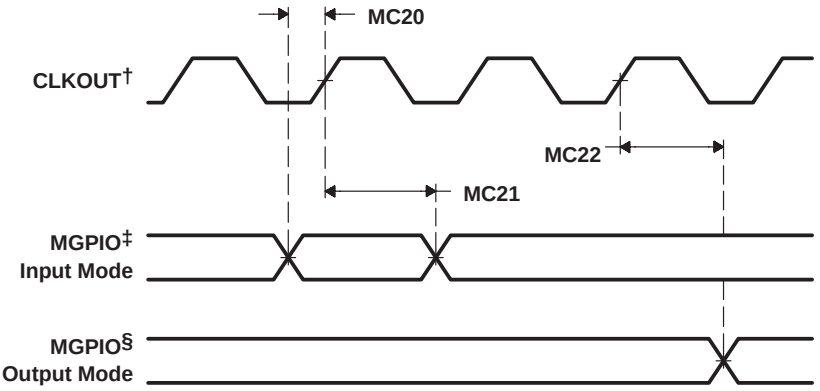

† CLKOUT reflects the CPU clock.
‡ MGPIOx refers to CLKRx, FSRx, DRx, CLKXx, or FSXx when configured as a general-purpose input.
§ MGPIOx refers to CLKRx, FSRx, CLKXx, FSXx, or DXx when configured as a general-purpose output.

Figure 5−30. McBSP General-Purpose I/O Timings

5.15 Enhanced Host-Port Interface (EHPI) Timings

Table 5−37 and Table 5−38 assume testing over recommended operating conditions (see Figure 5−31 through Figure 5−36).

Table 5−37. EHPI Timing Requirements

NO.			CV_{DD} = 1.2 V CV_{DD} = 1.35 V		CV_{DD} = 1.6 V		UNIT
			MIN	MAX	MIN	MAX	
E11	$t_{su(HASL-HDSL)}$	Setup time, $\overline{HAS}$ low before $\overline{HDS}$ low	4		4		ns
E12	$t_{h(HDSL-HASL)}$	Hold time, $\overline{HAS}$ low after $\overline{HDS}$ low	3		3		ns
E13	$t_{su(HCNTLV-HDSL)}$	Setup time, (HR/$\overline{W}$, HA[13:0], $\overline{HBE[1:0]}$, HCNTL[1:0]) valid before $\overline{HDS}$ low	2		2		ns
E14	$t_{h(HDSL-HCNTLIV)}$	Hold time, (HR/$\overline{W}$, HA[13:0], $\overline{HBE[1:0]}$, HCNTL[1:0]) invalid after $\overline{HDS}$ low	4		4		ns
E15	$t_{w(HDSL)}$	Pulse duration, $\overline{HDS}$ low	4P†		4P†		ns
E16	$t_{w(HDSH)}$	Pulse duration, $\overline{HDS}$ high	4P†		4P†		ns
E17	$t_{su(HDV-HDSH)}$	Setup time, HD bus write data valid before $\overline{HDS}$ high	3		3		ns
E18	$t_{h(HDSH-HDIV)}$	Hold time, HD bus write data invalid after $\overline{HDS}$ high	4		4		ns
E19	$t_{su(HCNTLV-HASL)}$	Setup time, (HR/$\overline{W}$, $\overline{HBE[1:0]}$, HCNTL[1:0]) valid before $\overline{HAS}$ low	3		3		ns
E20	$t_{h(HASL-HCNTLIV)}$	Hold time, (HR/$\overline{W}$, $\overline{HBE[1:0]}$, HCNTL[1:0]) valid after $\overline{HAS}$ low	4		4		ns

† P = 1/CPU clock frequency in ns. For example, when running parts at 200 MHz, use P = 5 ns.

Table 5−38. EHPI Switching Characteristics

NO.	PARAMETER		CV_{DD} = 1.2 V CV_{DD} = 1.35 V		CV_{DD} = 1.6 V		UNIT
			MIN	MAX	MIN	MAX	
E1	$t_{en(HDSL-HDD)M}$	Enable time, $\overline{HDS}$ low to HD bus enabled (memory access)	6	26	6	19	ns
E2	$t_{d(HDSL-HDV)M}$	Delay time, $\overline{HDS}$ low to HD bus read data valid (memory access)	14P†‡		14P†‡		ns
E4	$t_{en(HDSL-HDD)R}$	Enable time, $\overline{HDS}$ low to HD enabled (register access)	6	26	6	19	ns
E5	$t_{d(HDSL-HDV)R}$	Delay time, $\overline{HDS}$ low to HD bus read data valid (register access)		26		19	ns
E6	$t_{dis(HDSH-HDIV)}$	Disable time, $\overline{HDS}$ high to HD bus read data invalid	6	26	6	19	ns
E7	$t_{d(HDSL-HRDYL)}$	Delay time, $\overline{HDS}$ low to HRDY low (during reads)		18		15	ns
E8	$t_{d(HDV-HRDYH)}$	Delay time, HD bus valid to HRDY high (during reads)	2		2		ns
E9	$t_{d(HDSH-HRDYL)}$	Delay time, $\overline{HDS}$ high to HRDY low (during writes)		18		15	ns
E10	$t_{d(HDSH-HRDYH)}$	Delay time, $\overline{HDS}$ high to HRDY high (during writes)	14P†‡		14P†‡		ns
E21	$t_{d(COH-HINT)}$	Delay time, CLKOUT high to $\overline{HINT}$ high/low	0	11	0	8	ns

† P = 1/CPU clock frequency in ns. For example, when running parts at 200 MHz, use P = 5 ns.
‡ EHPI latency is dependent on the number of DMA channels active, their priorities and their source/destination ports. The latency shown assumes no competing CPU or DMA activity to the memory resource being accessed by the EHPI.

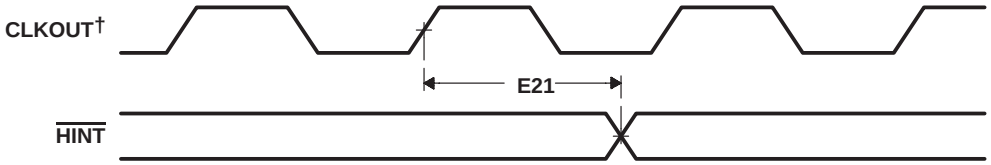

† CLKOUT reflects the CPU clock.

Figure 5−31. HINT Timings

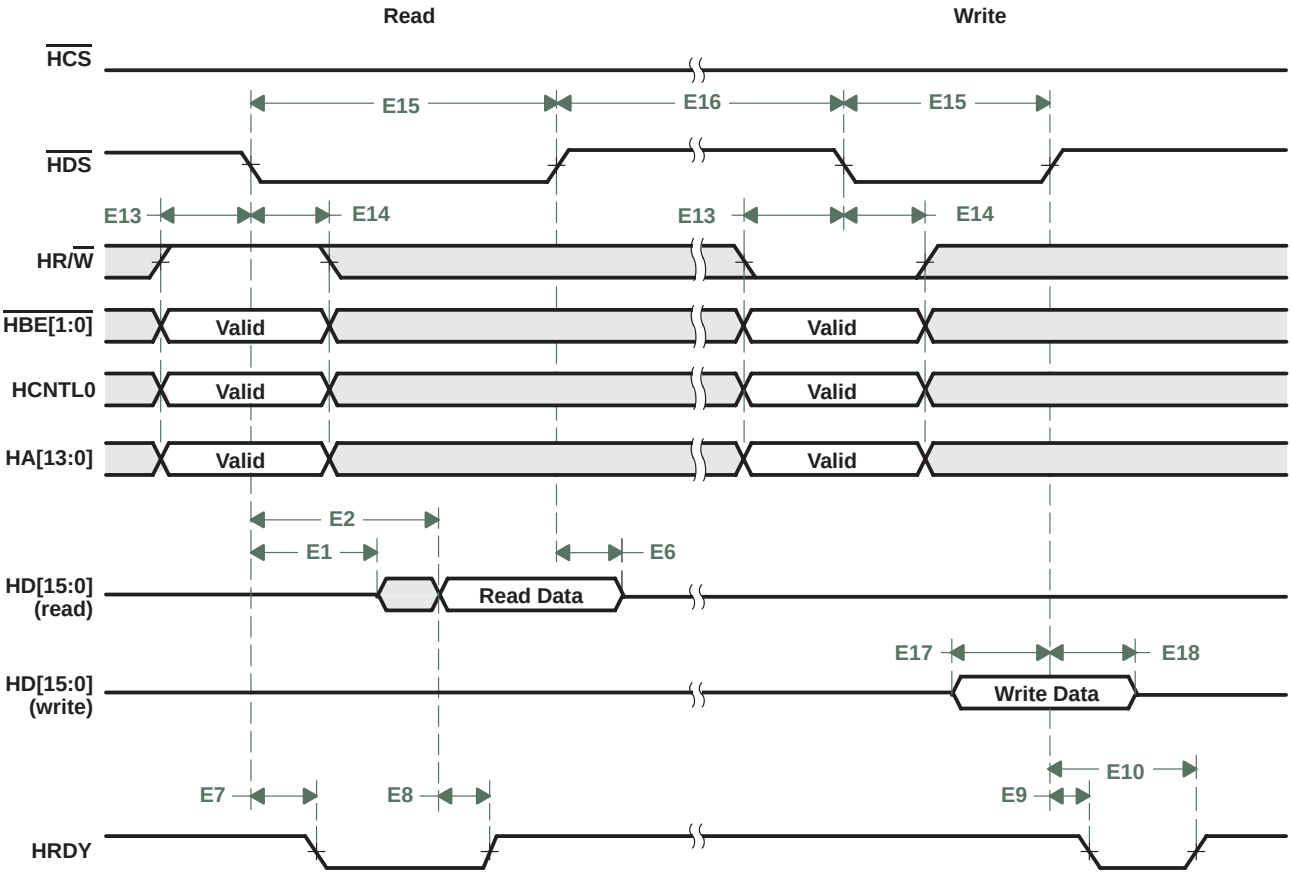

NOTES: A. Any non-multiplexed access with HCNTL0 low will result in HPIC register access. For data read or write, HCNTL0 must stay high during the EHPI access.

B. The falling edge of HCS must occur concurrent with or before the falling edge of HDS. The rising edge of HCS must occur concurrent with or after the rising edge of HDS. If HDS1 and/or HDS2 are tied permanently active and HCS is used as a strobe, the timing requirements shown for HDS apply to HCS. HRDY is always driven to the same value as its internal state.

Figure 5−32. EHPI Nonmultiplexed Read/Write Timings

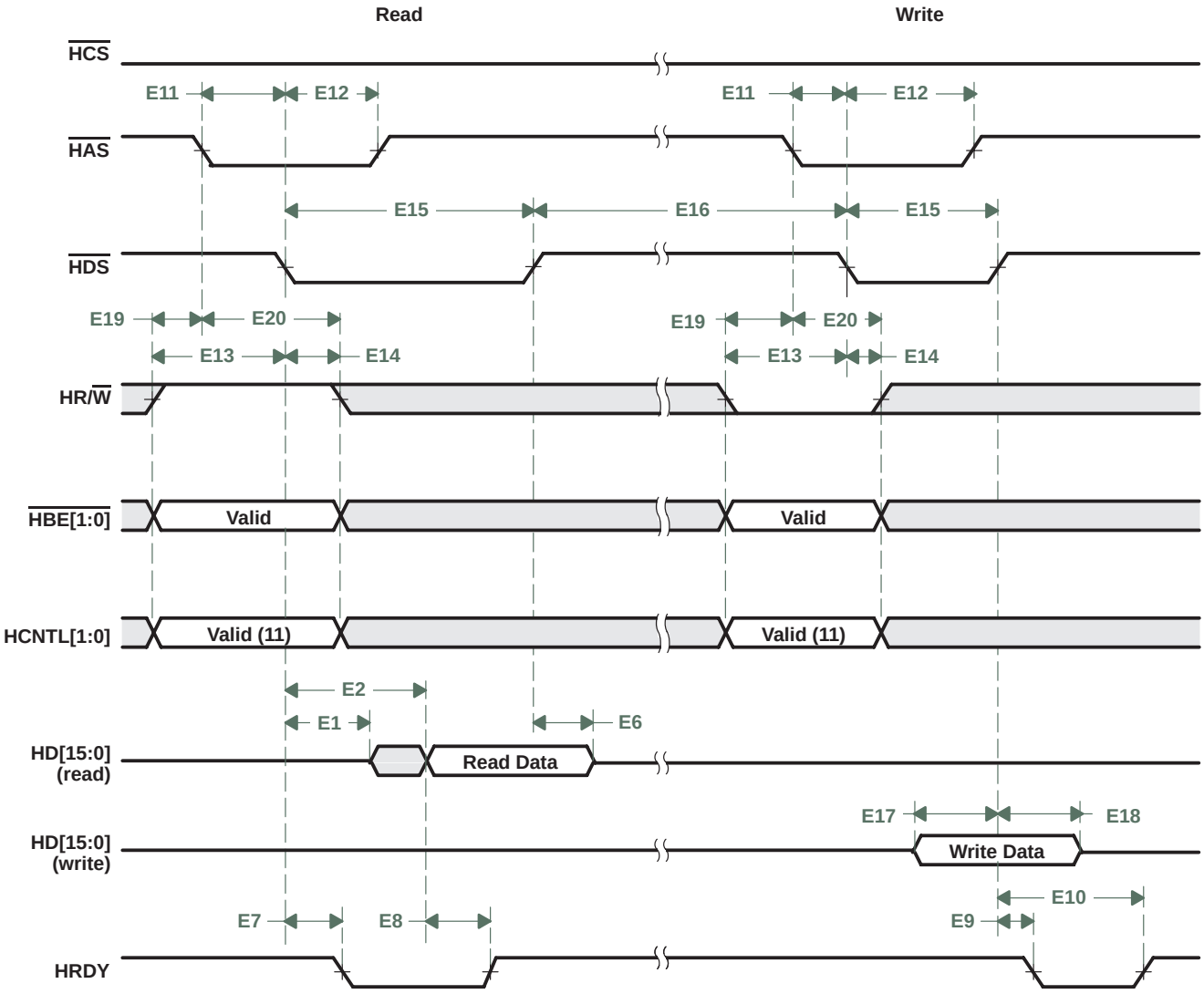

NOTE: The falling edge of HCS must occur concurrent with or before the falling edge of HDS. The rising edge of HCS must occur concurrent with or after the rising edge of HDS. If HDS1 and/or HDS2 are tied permanently active and HCS is used as a strobe, the timing requirements shown for HDS apply to HCS. HRDY is always driven to the same value as its internal state.

Figure 5−33. EHPI Multiplexed Memory (HPID) Read/Write Timings Without Autoincrement

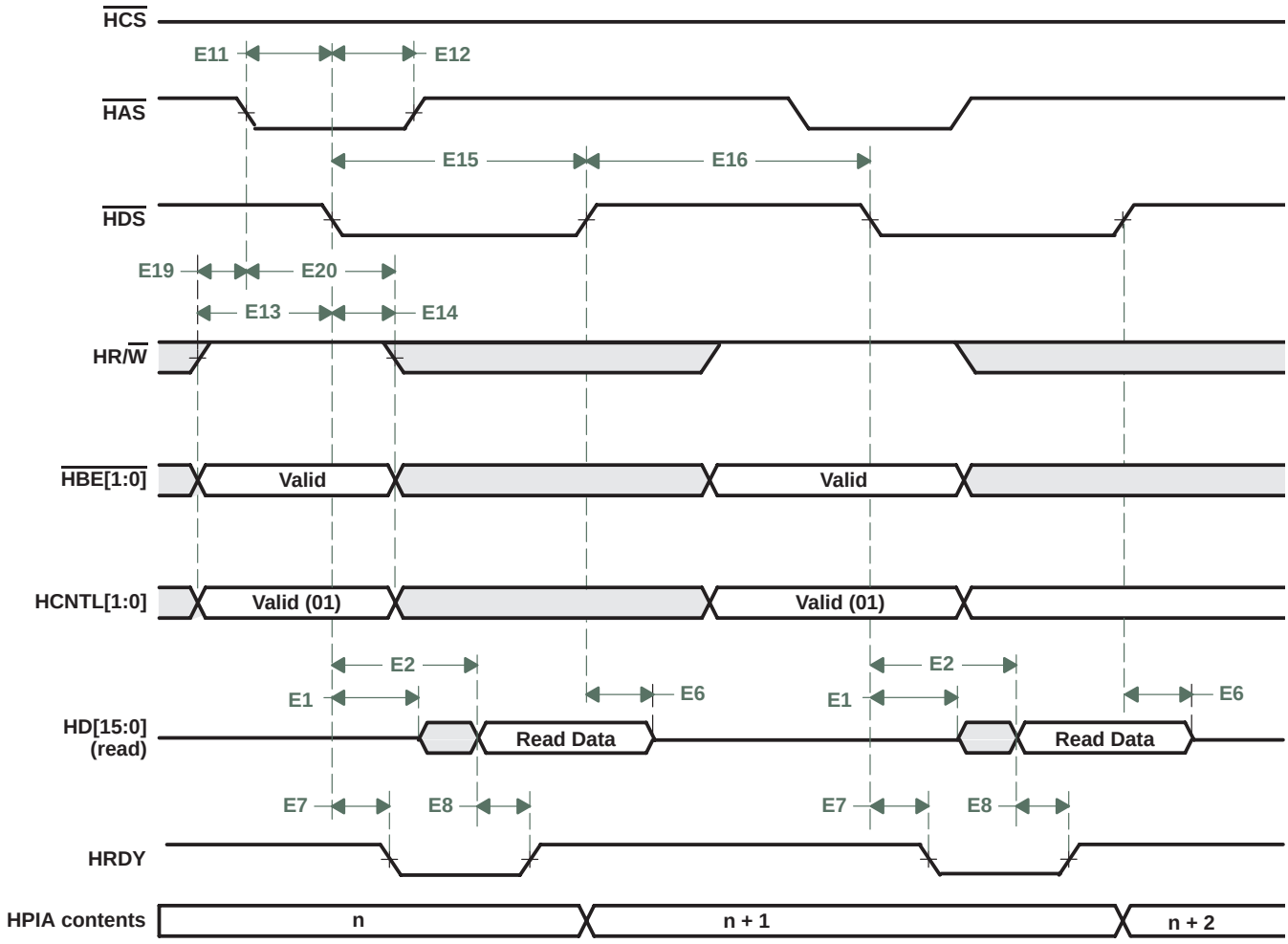

NOTES: A. During autoincrement mode, although the EHPI internally increments the memory address, reads of the HPIA register by the host will always indicate the base address.

B. In autoincrement mode, if HBE[1:0] are used to access the data as 8-bit-wide units, the HPIA increments only following each high byte (HBE1 low) access.

C. The falling edge of HCS must occur concurrent with or before the falling edge of HDS. The rising edge of HCS must occur concurrent with or after the rising edge of HDS. If HDS1 and/or HDS2 are tied permanently active and HCS is used as a strobe, the timing requirements shown for HDS apply to HCS. HRDY is always driven to the same value as its internal state.

Figure 5−34. EHPI Multiplexed Memory (HPID) Read Timings With Autoincrement

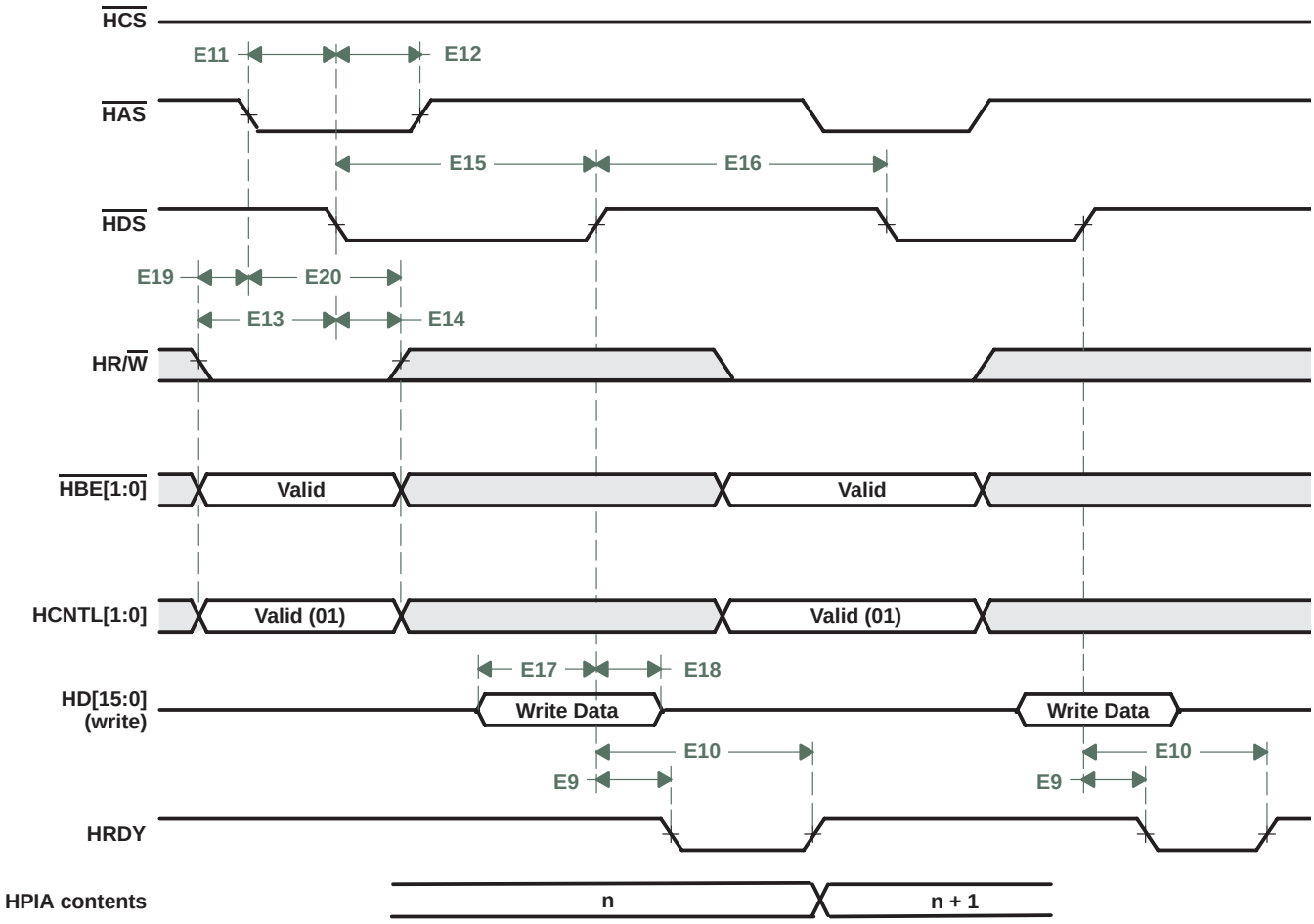

NOTES: A. During autoincrement mode, although the EHPI internally increments the memory address, reads of the HPIA register by the host will always indicate the base address.

B. The falling edge of $\overline{\text{HCS}}$ must occur concurrent with or before the falling edge of $\overline{\text{HDS}}$. The rising edge of $\overline{\text{HCS}}$ must occur concurrent with or after the rising edge of $\overline{\text{HDS}}$. If $\overline{\text{HDS1}}$ and/or $\overline{\text{HDS2}}$ are tied permanently active and $\overline{\text{HCS}}$ is used as a strobe, the timing requirements shown for $\overline{\text{HDS}}$ apply to $\overline{\text{HCS}}$. HRDY is always driven to the same value as its internal state.

Figure 5−35. EHPI Multiplexed Memory (HPID) Write Timings With Autoincrement

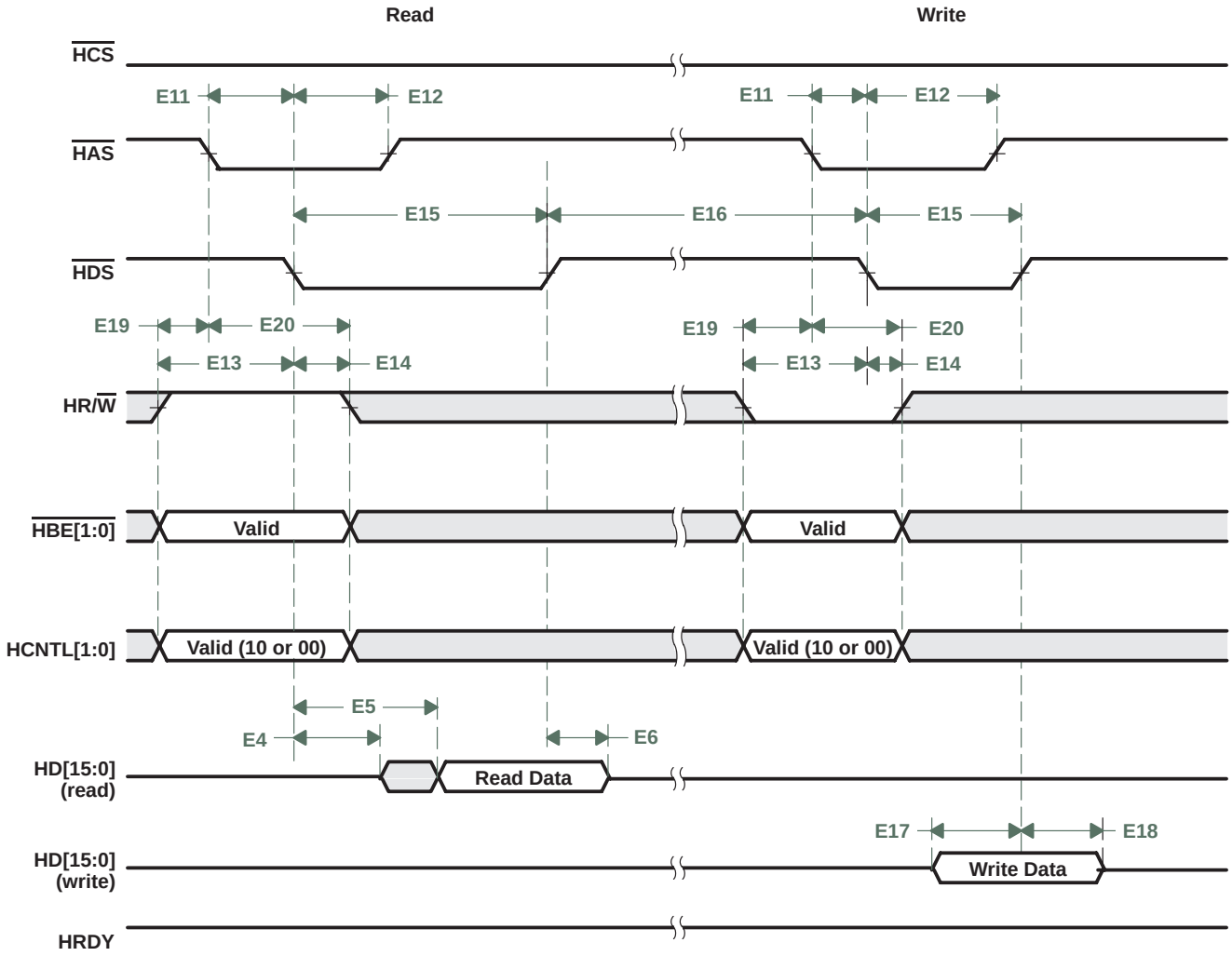

NOTES: A. During autoincrement mode, although the EHPI internally increments the memory address, reads of the HPIA register by the host will always indicate the base address.

B. The falling edge of HCS must occur concurrent with or before the falling edge of HDS. The rising edge of HCS must occur concurrent with or after the rising edge of HDS. If HDS1 and/or HDS2 are tied permanently active and HCS is used as a strobe, the timing requirements shown for HDS apply to HCS. HRDY is always driven to the same value as its internal state.

Figure 5−36. EHPI Multiplexed Register Read/Write Timings

5.16 I²C Timings

Table 5−39 and Table 5−40 assume testing over recommended operating conditions (see Figure 5−37 and Figure 5−38).

Table 5−39. I²C Signals (SDA and SCL) Timing Requirements

NO.			CV_{DD} = 1.2 V CV_{DD} = 1.35 V				CV_{DD} = 1.6 V				UNIT
			STANDARD MODE		FAST MODE		STANDARD MODE		FAST MODE		
			MIN	MAX	MIN	MAX	MIN	MAX	MIN	MAX	
IC1	$t_{c(SCL)}$	Cycle time, SCL	10		2.5		10		2.5		µs
IC2	$t_{su(SCLH-SDAL)}$	Setup time, SCL high before SDA low for a repeated START condition	4.7		0.6		4.7		0.6		µs
IC3	$t_{h(SCLL-SDAL)}$	Hold time, SCL low after SDA low for a START and a repeated START condition	4		0.6		4		0.6		µs
IC4	$t_{w(SCLL)}$	Pulse duration, SCL low	4.7		1.3		4.7		1.3		µs
IC5	$t_{w(SCLH)}$	Pulse duration, SCL high	4		0.6		4		0.6		µs
IC6	$t_{su(SDA-SCLH)}$	Setup time, SDA valid before SCL high	250		100†		250		100†		ns
IC7	$t_{h(SDA-SCLL)}$	Hold time, SDA valid after SCL low	0‡		0‡	0.9§	0‡		0‡	0.9§	µs
IC8	$t_{w(SDAH)}$	Pulse duration, SDA high between STOP and START conditions	4.7		1.3		4.7		1.3		µs
IC9	$t_{r(SDA)}$	Rise time, SDA		1000	20 + 0.1C_b¶	300		1000	20 + 0.1C_b¶	300	ns
IC10	$t_{r(SCL)}$	Rise time, SCL		1000	20 + 0.1C_b¶	300		1000	20 + 0.1C_b¶	300	ns
IC11	$t_{f(SDA)}$	Fall time, SDA		300	20 + 0.1C_b¶	300		300	20 + 0.1C_b¶	300	ns
IC12	$t_{f(SCL)}$	Fall time, SCL		300	20 + 0.1C_b¶	300		300	20 + 0.1C_b¶	300	ns
IC13	$t_{su(SCLH-SDAH)}$	Setup time, SCL high before SDA high (for STOP condition)	4.0		0.6		4.0		0.6		µs
IC14	$t_{w(SP)}$	Pulse duration, spike (must be suppressed)			0	50			0	50	ns
IC15	C_b¶	Capacitive load for each bus line		400		400		400		400	pF

† A Fast-mode I²C-bus device can be used in a Standard-mode I²C-bus system, but the requirement $t_{su(SDA-SCLH)} \geq 250$ ns must then be met. This will automatically be the case if the device does not stretch the LOW period of the SCL signal. If such a device does stretch the LOW period of the SCL signal, it must output the next data bit to the SDA line t_r max + $t_{su(SDA-SCLH)}$ = 1000 + 250 = 1250 ns (according to the Standard-mode I²C-Bus Specification) before the SCL line is released.

‡ A device must internally provide a hold time of at least 300 ns for the SDA signal (referred to the V_{IHmin} of the SCL signal) to bridge the undefined region of the falling edge of SCL.

§ The maximum $t_{h(SDA-SCLL)}$ has only to be met if the device does not stretch the LOW period [$t_{w(SCLL)}$] of the SCL signal.

¶ C_b = total capacitance of one bus line in pF. If mixed with HS-mode devices, faster fall-times are allowed.

I²C Bus is a trademark of Koninklijke Philips Electronics N.V.

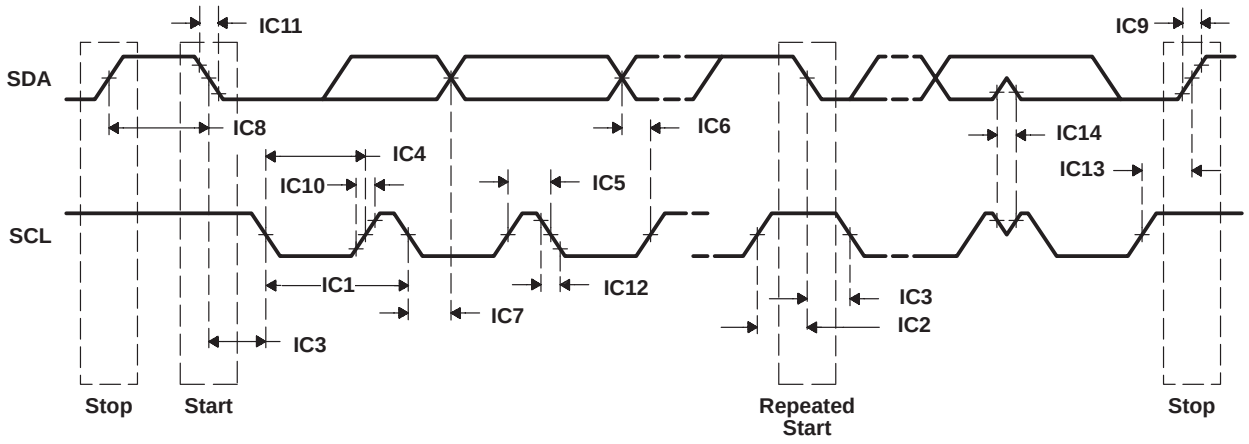

Figure 5−37. I^2C Receive Timings

Table 5−40. I²C Signals (SDA and SCL) Switching Characteristics

NO.	PARAMETER		CV_{DD} = 1.2 V CV_{DD} = 1.35 V				CV_{DD} = 1.6 V				UNIT
			STANDARD MODE		FAST MODE		STANDARD MODE		FAST MODE		
			MIN	MAX	MIN	MAX	MIN	MAX	MIN	MAX	
IC16	$t_{c(SCL)}$	Cycle time, SCL	10		2.5		10		2.5		µs
IC17	$t_{d(SCLH-SDAL)}$	Delay time, SCL high to SDA low for a repeated START condition	4.7		0.6		4.7		0.6		µs
IC18	$t_{d(SDAL-SCLL)}$	Delay time, SDA low to SCL low for a START and a repeated START condition	4		0.6		4		0.6		µs
IC19	$t_{w(SCLL)}$	Pulse duration, SCL low	4.7		1.3		4.7		1.3		µs
IC20	$t_{w(SCLH)}$	Pulse duration, SCL high	4		0.6		4		0.6		µs
IC21	$t_{d(SDA-SCLH)}$	Delay time, SDA valid to SCL high	250		100		250		100		ns
IC22	$t_{v(SCLL-SDAV)}$	Valid time, SDA valid after SCL low	0		0	0.9	0		0	0.9	µs
IC23	$t_{w(SDAH)}$	Pulse duration, SDA high between STOP and START conditions	4.7		1.3		4.7		1.3		µs
IC24	$t_{r(SDA)}$	Rise time, SDA		1000	$20 + 0.1C_b$†	300		1000	$20 + 0.1C_b$†	300	ns
IC25	$t_{r(SCL)}$	Rise time, SCL		1000	$20 + 0.1C_b$†	300		1000	$20 + 0.1C_b$†	300	ns
IC26	$t_{f(SDA)}$	Fall time, SDA		300	$20 + 0.1C_b$†	300		300	$20 + 0.1C_b$†	300	ns
IC27	$t_{f(SCL)}$	Fall time, SCL		300	$20 + 0.1C_b$†	300		300	$20 + 0.1C_b$†	300	ns
IC28	$t_{d(SCLH-SDAH)}$	Delay time, SCL high to SDA high for a STOP condition	4		0.6		4		0.6		µs
IC29	C_p	Capacitance for each I²C pin		10		10		10		10	pF

† C_b = total capacitance of one bus line in pF. If mixed with HS-mode devices, faster fall-times are allowed.

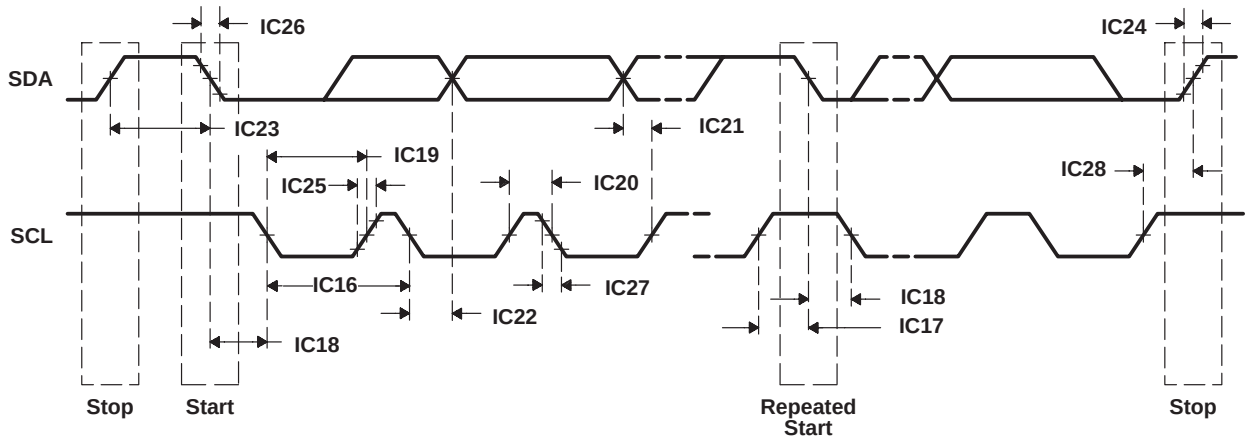

Figure 5−38. I²C Transmit Timings

5.17 MultiMedia Card (MMC) Timings

Table 5−41 and Table 5−42 assume testing over recommended operating conditions (see Figure 5−39).

Table 5−41. MultiMedia Card (MMC) Timing Requirements

NO.			CV_{DD} = 1.2 V CV_{DD} = 1.35 V		CV_{DD} = 1.6 V		UNIT
			MIN	MAX	MIN	MAX	
MMC7	$t_{su(DV-CLKH)}$	Setup time, data valid before clock high	9		6		ns
MMC8	$t_{h(CLKH-DV)}$	Hold time, data valid after clock high	0		0		ns

Table 5−42. MultiMedia Card (MMC) Switching Characteristics

NO.	PARAMETER		CV_{DD} = 1.2 V CV_{DD} = 1.35 V		CV_{DD} = 1.6 V		UNIT
			MIN	MAX	MIN	MAX	
MMC1	$f_{(PP)}$	Clock frequency data transfer mode (PP) (C_L = 100 pF)		17.2†		19.2†	MHz
MMC2	$f_{(OD)}$	Clock frequency identification mode (OD)		400		400	kHz
MMC3	$t_{w(CLKL)}$	Clock low time (C_L = 100 pF)	10		10		ns
MMC4	$t_{w(CLKH)}$	Clock high time (C_L = 100 pF)	10		10		ns
MMC5	$t_{r(CLK)}$	Clock rise time (C_L = 100 pF)		10		10	ns
MMC6	$t_{f(CLK)}$	Clock fall time (C_L = 100 pF)		10		10	ns
MMC9	$t_{d(CLKL-DV)}$	Delay time, MMC.CLK low to data valid	−1	5	−1	5	ns

† Maximum clock frequency specified in MMC Specification version 3.2 is 20 MHz. The 5509A can support clock frequency as high as 19.2 MHz.

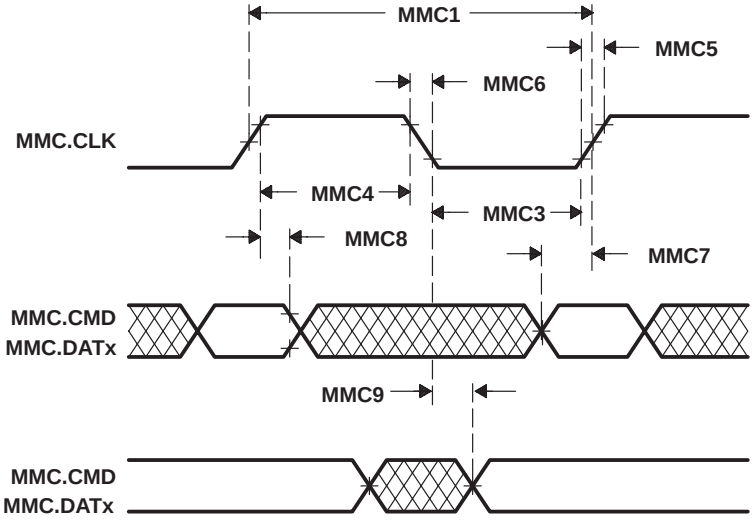

Figure 5−39. MultiMedia Card (MMC) Timings

5.18 Secure Digital (SD) Card Timings

Table 5−43 and Table 5−44 assume testing over recommended operating conditions (see Figure 5−40).

Table 5−43. Secure Digital (SD) Card Timing Requirements

NO.			CV_{DD} = 1.2 V CV_{DD} = 1.35 V		CV_{DD} = 1.6 V		UNIT
			MIN	MAX	MIN	MAX	
SD7	$t_{su(DV-CLKH)}$	Setup time, data valid before clock high	9		6		ns
SD8	$t_{h(CLKH-DV)}$	Hold time, data valid after clock high	0		0		ns

Table 5−44. Secure Digital (SD) Card Switching Characteristics

NO.	PARAMETER		CV_{DD} = 1.2 V CV_{DD} = 1.35 V		CV_{DD} = 1.6 V		UNIT
			MIN	MAX	MIN	MAX	
SD1	$f_{(PP)}$	Clock frequency data transfer mode (PP) (C_L = 100 pF)		21†		25†	MHz
SD2	$f_{(OD)}$	Clock frequency identification mode (OD)		400		400	kHz
SD3	$t_{w(CLKL)}$	Clock low time (C_L = 100 pF)	10		10		ns
SD4	$t_{w(CLKH)}$	Clock high time (C_L = 100 pF)	10		10		ns
SD5	$t_{r(CLK)}$	Clock rise time (C_L = 100 pF)		10		10	ns
SD6	$t_{f(CLK)}$	Clock fall time (C_L = 100 pF)		10		10	ns
SD9	$t_{d(CLKL-DV)}$	Delay time, SD.CLK low to data valid	−1	5	−1	5	ns

† Maximum clock frequency specified in the SD Specification is 25 MHz. The 5509A can support clock frequency as high as 21.0 MHz at core voltage = 1.2 V.

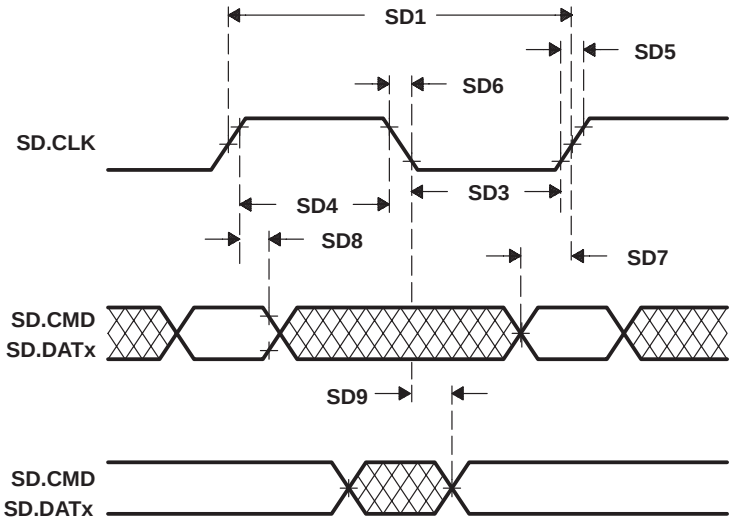

Figure 5−40. Secure Digital (SD) Timings

5.19 Universal Serial Bus (USB) Timings

Table 5−45 assumes testing over recommended operating conditions (see Figure 5−41 and Figure 5−42).

Table 5−45. Universal Serial Bus (USB) Characteristics

NO.	PARAMETER		CV_{DD} = 1.2 V CV_{DD} = 1.35 V			CV_{DD} = 1.6 V			UNIT
			FULL SPEED 12Mbps			FULL SPEED 12Mbps			
			MIN	TYP	MAX	MIN	TYP	MAX	
U1	t_r	Rise time of DP and DN signals†	4		20	4		20	ns
U2	t_f	Fall time of DP and DN signals†	4		20	4		20	ns
	t_{RFM}	Rise/Fall time matching‡	90		111.11	90		111.11	%
	V_{CRS}	Output signal cross-over voltage†	1.3		2.0	1.3		2.0	V
	t_{jr}	Differential propagation jitter§¶	−2		2	−2		2	ns
	f_{op}	Operating frequency (Full speed mode)		12			12		Mb/s
U3	$R_{S(DP)}$	Series resistor		24			24		Ω
U4	$R_{S(DN)}$	Series resistor		24			24		Ω
U5	$C_{edge(DP)}$	Edge rate control capacitor		22			22		pF
U6	$C_{edge(DN)}$	Edge rate control capacitor		22			22		pF

† C_L = 50 pF
‡ (t_r/t_f) x 100
§ $t_{px(1)} - t_{px(0)}$
¶ USB PLL is susceptible to power supply ripple, refer to recommend operating conditions for allowable supply ripple to meet the USB peak-to-peak jitter specification.

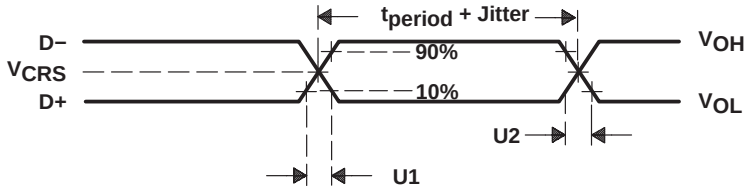

Figure 5−41. USB Timings

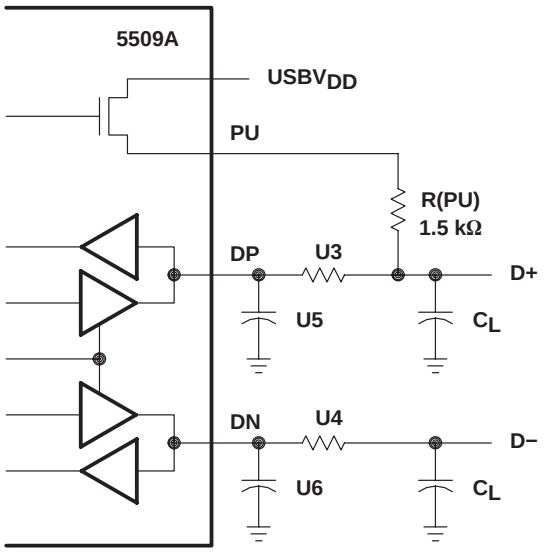

NOTES: A. A full-speed buffer is measured with the load shown.
B. C_L = 50 pF

Figure 5−42. Full-Speed Loads

5.20 ADC Timings

Table 5−46 assumes testing over recommended operating conditions.

Table 5−46. ADC Characteristics

NO.	PARAMETER		CV_{DD} = 1.2 V CV_{DD} = 1.35 V		CV_{DD} = 1.6 V		UNIT
			MIN	MAX	MIN	MAX	
A1	$t_{c(SCLC)}$	Cycle time, ADC internal conversion clock	500		500		ns
A2	$t_{d(AQ)}$	Delay time, ADC sample and hold acquisition time		40		40	µs
A3	$t_{d(CONV)}$	Delay time, ADC conversion time		13 * $t_{c(SCLC)}$		13 * $t_{c(SCLC)}$	ns
A4	S_{DNL}	Static differential non-linearity error		2		2	LSB
		Static integral non-linearity error		3		3	LSB
A5	Z_{set}	Zero-scale offset error		9		9	LSB
A6	F_{set}	Full-scale offset error		9		9	LSB
A7		Analog input impedance	1		1		MΩ

6 Mechanical Data

6.1 Package Thermal Resistance Characteristics

Table 6−1 and Table 6−2 provide the estimated thermal resistance characteristics for the TMS320VC5509A DSP package types.

Table 6−1. Thermal Resistance Characteristics (Ambient)

PACKAGE	$R_{\Theta JA}$ (°C/W)	BOARD TYPE†	AIRFLOW (LFM)
GHH, ZHH	37.1	High-K	0
	35.1	High-K	150
	33.7	High-K	250
	32.2	High-K	500
	70.3	Low-K	0
	61.6	Low-K	150
	56.5	Low-K	250
	49.3	Low-K	500
PGE	71.2	High-K	0
	61.8	High-K	150
	58.9	High-K	250
	54.8	High-K	500
	103.6	Low-K	0
	84.2	Low-K	150
	77.8	Low-K	250
	69.4	Low-K	500

†Board types are as defined by JEDEC. Reference JEDEC Standard JESD51-9, Test Boards for Area Array Surface Mount Package Thermal Measurements.

Table 6−2. Thermal Resistance Characteristics (Case)

PACKAGE	$R_{\Theta JC}$ (°C/W)	BOARD TYPE†
GHH, ZHH	13.8	2s JEDEC Test Card
PGE	13.8	2s JEDEC Test Card

† Board types are as defined by JEDEC. Reference JEDEC Standard JESD51-9, Test Boards for Area Array Surface Mount Package Thermal Measurements.

6.2 Packaging Information

The following packaging information reflects the most current released data available for the designated device(s). This data is subject to change without notice and without revision of this document.

PACKAGING INFORMATION

Orderable part number	Status (1)	Material type (2)	Package | Pins	Package qty | Carrier	RoHS (3)	Lead finish/ Ball material (4)	MSL rating/ Peak reflow (5)	Op temp (°C)	Part marking (6)
TMS320VC5509AGBB	Active	Production	NFBGA (GBB) | 179	160 | JEDEC TRAY (5+1)	No	SNPB	Level-3-220C-168 HR	-40 to 85	TMS320 VC5509AGBB
TMS320VC5509AGBB.A	Active	Production	NFBGA (GBB) | 179	160 | JEDEC TRAY (5+1)	No	SNPB	Level-3-220C-168 HR	-40 to 85	TMS320 VC5509AGBB
TMS320VC5509AGBBR	Active	Production	NFBGA (GBB) | 179	1000 | LARGE T&R	No	SNPB	Level-3-220C-168 HR	-40 to 85	TMS320 VC5509AGBB
TMS320VC5509AGBBR.A	Active	Production	NFBGA (GBB) | 179	1000 | LARGE T&R	No	SNPB	Level-3-220C-168 HR	-40 to 85	TMS320 VC5509AGBB
TMS320VC5509APGE	Active	Production	LQFP (PGE) | 144	60 | JEDEC TRAY (5+1)	Yes	NIPDAU	Level-4-260C-72 HR	-40 to 85	VC5509APGE TMS320
TMS320VC5509APGE.A	Active	Production	LQFP (PGE) | 144	60 | JEDEC TRAY (5+1)	Yes	NIPDAU	Level-4-260C-72 HR	-40 to 85	VC5509APGE TMS320
TMS320VC5509APGEG4	Active	Production	LQFP (PGE) | 144	60 | JEDEC TRAY (5+1)	Yes	NIPDAU	Level-4-260C-72 HR	-40 to 85	VC5509APGE TMS320
TMS320VC5509APGEG4.A	Active	Production	LQFP (PGE) | 144	60 | JEDEC TRAY (5+1)	Yes	NIPDAU	Level-4-260C-72 HR	-40 to 85	VC5509APGE TMS320
TMS320VC5509AZAY	Active	Production	NFBGA (ZAY) | 179	160 | JEDEC TRAY (5+1)	Yes	SNAGCU	Level-3-260C-168 HR	-40 to 85	TMS320 VC5509AZAY
TMS320VC5509AZAY.A	Active	Production	NFBGA (ZAY) | 179	160 | JEDEC TRAY (5+1)	Yes	SNAGCU	Level-3-260C-168 HR	-40 to 85	TMS320 VC5509AZAY
TMS320VC5509AZAYR	Active	Production	NFBGA (ZAY) | 179	1000 | LARGE T&R	Yes	SNAGCU	Level-3-260C-168 HR	-40 to 85	TMS320 VC5509AZAY
TMS320VC5509AZAYR.A	Active	Production	NFBGA (ZAY) | 179	1000 | LARGE T&R	Yes	SNAGCU	Level-3-260C-168 HR	-40 to 85	TMS320 VC5509AZAY
VC55GPSPGE	Active	Production	LQFP (PGE) | 144	60 | JEDEC TRAY (5+1)	Yes	NIPDAU	Level-4-260C-72 HR	-40 to 85	VC5509APGE TMS320

(1) **Status:** For more details on status, see our product life cycle.

(2) **Material type:** When designated, preproduction parts are prototypes/experimental devices, and are not yet approved or released for full production. Testing and final process, including without limitation quality assurance, reliability performance testing, and/or process qualification, may not yet be complete, and this item is subject to further changes or possible discontinuation. If available for ordering, purchases will be subject to an additional waiver at checkout, and are intended for early internal evaluation purposes only. These items are sold without warranties of any kind.

(3) **RoHS values:** Yes, No, RoHS Exempt. See the TI RoHS Statement for additional information and value definition.

(4) **Lead finish/Ball material:** Parts may have multiple material finish options. Finish options are separated by a vertical ruled line. Lead finish/Ball material values may wrap to two lines if the finish value exceeds the maximum column width.

(5) **MSL rating/Peak reflow:** The moisture sensitivity level ratings and peak solder (reflow) temperatures. In the event that a part has multiple moisture sensitivity ratings, only the lowest level per JEDEC standards is shown. Refer to the shipping label for the actual reflow temperature that will be used to mount the part to the printed circuit board.

(6) **Part marking:** There may be an additional marking, which relates to the logo, the lot trace code information, or the environmental category of the part.

Multiple part markings will be inside parentheses. Only one part marking contained in parentheses and separated by a "~" will appear on a part. If a line is indented then it is a continuation of the previous line and the two combined represent the entire part marking for that device.

Important Information and Disclaimer: The information provided on this page represents TI's knowledge and belief as of the date that it is provided. TI bases its knowledge and belief on information provided by third parties, and makes no representation or warranty as to the accuracy of such information. Efforts are underway to better integrate information from third parties. TI has taken and continues to take reasonable steps to provide representative and accurate information but may not have conducted destructive testing or chemical analysis on incoming materials and chemicals. TI and TI suppliers consider certain information to be proprietary, and thus CAS numbers and other limited information may not be available for release.

In no event shall TI's liability arising out of such information exceed the total purchase price of the TI part(s) at issue in this document sold by TI to Customer on an annual basis.

TAPE AND REEL INFORMATION

REEL DIMENSIONS

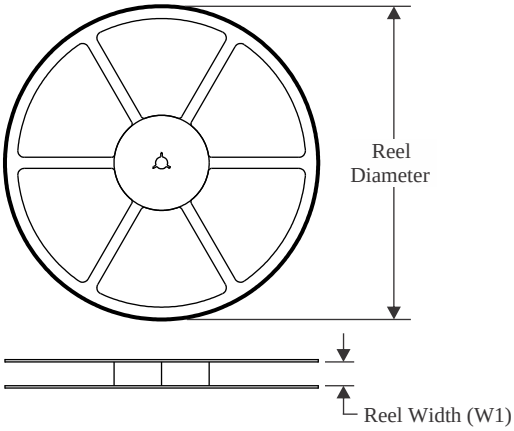

TAPE DIMENSIONS

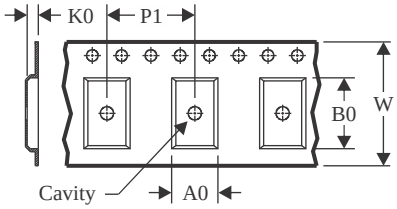

A0	Dimension designed to accommodate the component width
B0	Dimension designed to accommodate the component length
K0	Dimension designed to accommodate the component thickness
W	Overall width of the carrier tape
P1	Pitch between successive cavity centers

QUADRANT ASSIGNMENTS FOR PIN 1 ORIENTATION IN TAPE

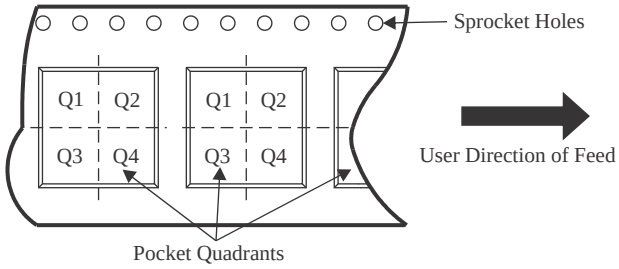

*All dimensions are nominal

Device	Package Type	Package Drawing	Pins	SPQ	Reel Diameter (mm)	Reel Width W1 (mm)	A0 (mm)	B0 (mm)	K0 (mm)	P1 (mm)	W (mm)	Pin1 Quadrant
TMS320VC5509AGBBR	NFBGA	GBB	179	1000	330.0	24.4	12.35	12.35	2.3	16.0	24.0	Q1
TMS320VC5509AZAYR	NFBGA	ZAY	179	1000	330.0	24.4	12.35	12.35	2.3	16.0	24.0	Q1

TAPE AND REEL BOX DIMENSIONS

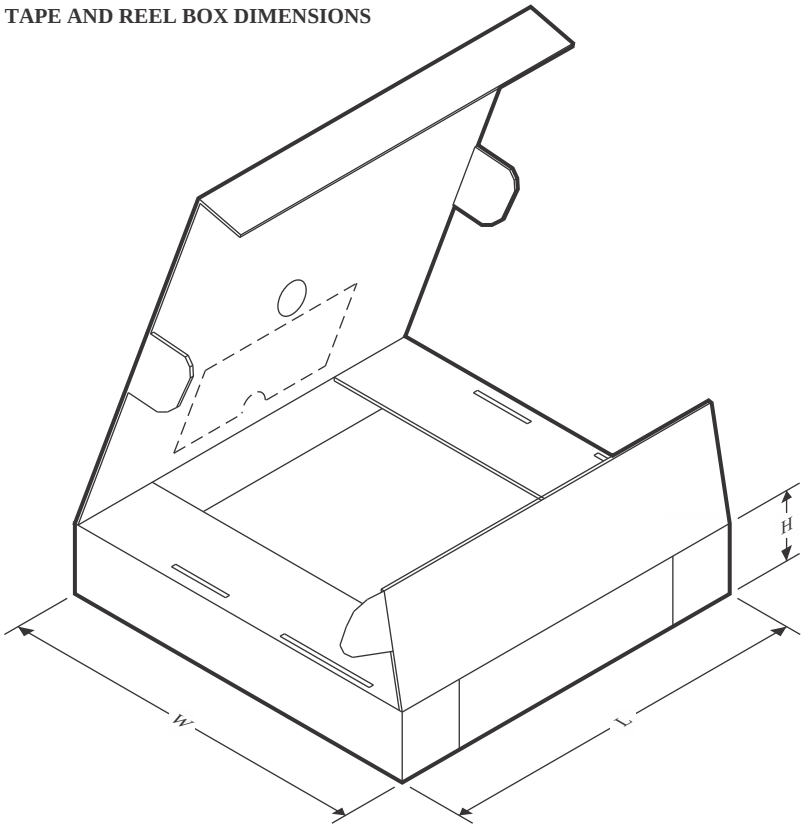

*All dimensions are nominal

Device	Package Type	Package Drawing	Pins	SPQ	Length (mm)	Width (mm)	Height (mm)
TMS320VC5509AGBBR	NFBGA	GBB	179	1000	336.6	336.6	41.3
TMS320VC5509AZAYR	NFBGA	ZAY	179	1000	336.6	336.6	41.3

TRAY

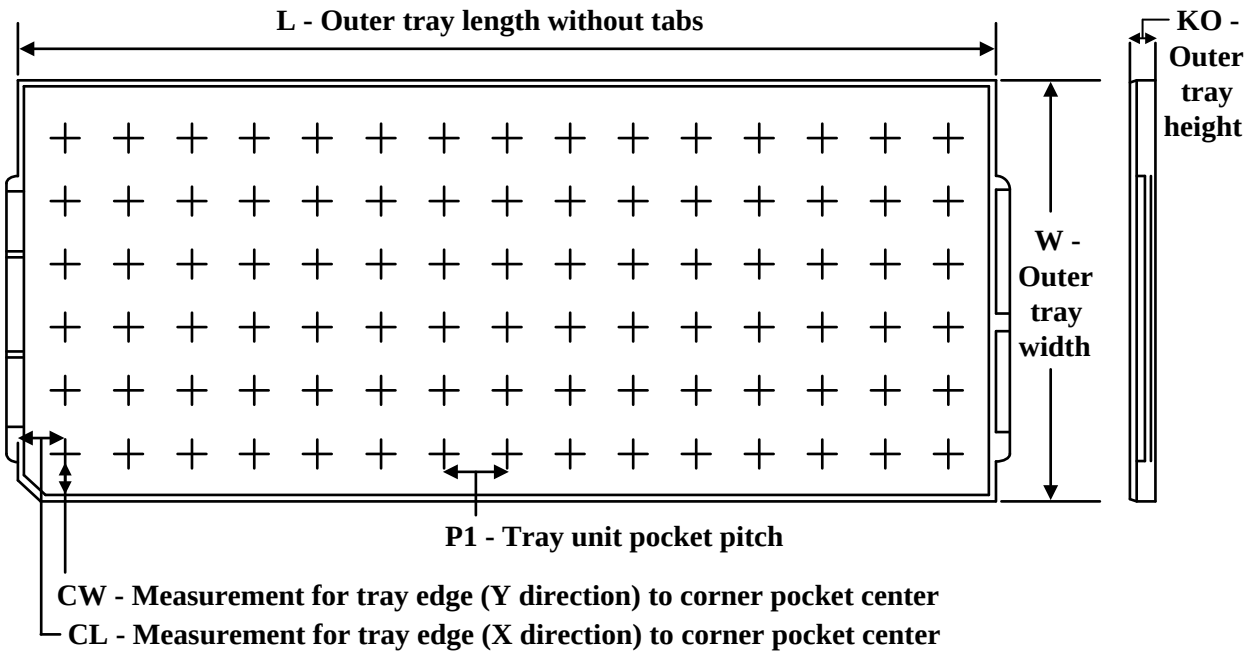

Chamfer on Tray corner indicates Pin 1 orientation of packed units.

*All dimensions are nominal

Device	Package Name	Package Type	Pins	SPQ	Unit array matrix	Max temperature (°C)	L (mm)	W (mm)	K0 (µm)	P1 (mm)	CL (mm)	CW (mm)
TMS320VC5509AGBB	GBB	NFBGA	179	160	8 x 20	150	315	135.9	7620	15.4	11.2	19.65
TMS320VC5509AGBB.A	GBB	NFBGA	179	160	8 x 20	150	315	135.9	7620	15.4	11.2	19.65
TMS320VC5509APGE	PGE	LQFP	144	60	5X12	150	315	135.9	7620	25.4	17.8	17.55
TMS320VC5509APGE.A	PGE	LQFP	144	60	5X12	150	315	135.9	7620	25.4	17.8	17.55
TMS320VC5509APGEG4	PGE	LQFP	144	60	5X12	150	315	135.9	7620	25.4	17.8	17.55
TMS320VC5509APGEG4.A	PGE	LQFP	144	60	5X12	150	315	135.9	7620	25.4	17.8	17.55
TMS320VC5509AZAY	ZAY	NFBGA	179	160	8 x 20	150	315	135.9	7620	15.4	11.2	19.65
TMS320VC5509AZAY.A	ZAY	NFBGA	179	160	8 x 20	150	315	135.9	7620	15.4	11.2	19.65
VC55GPSPGE	PGE	LQFP	144	60	5X12	150	315	135.9	7620	25.4	17.8	17.55

PACKAGE OUTLINE

ZHH0179A

UBGA - 1.4 mm max height

BALL GRID ARRAY

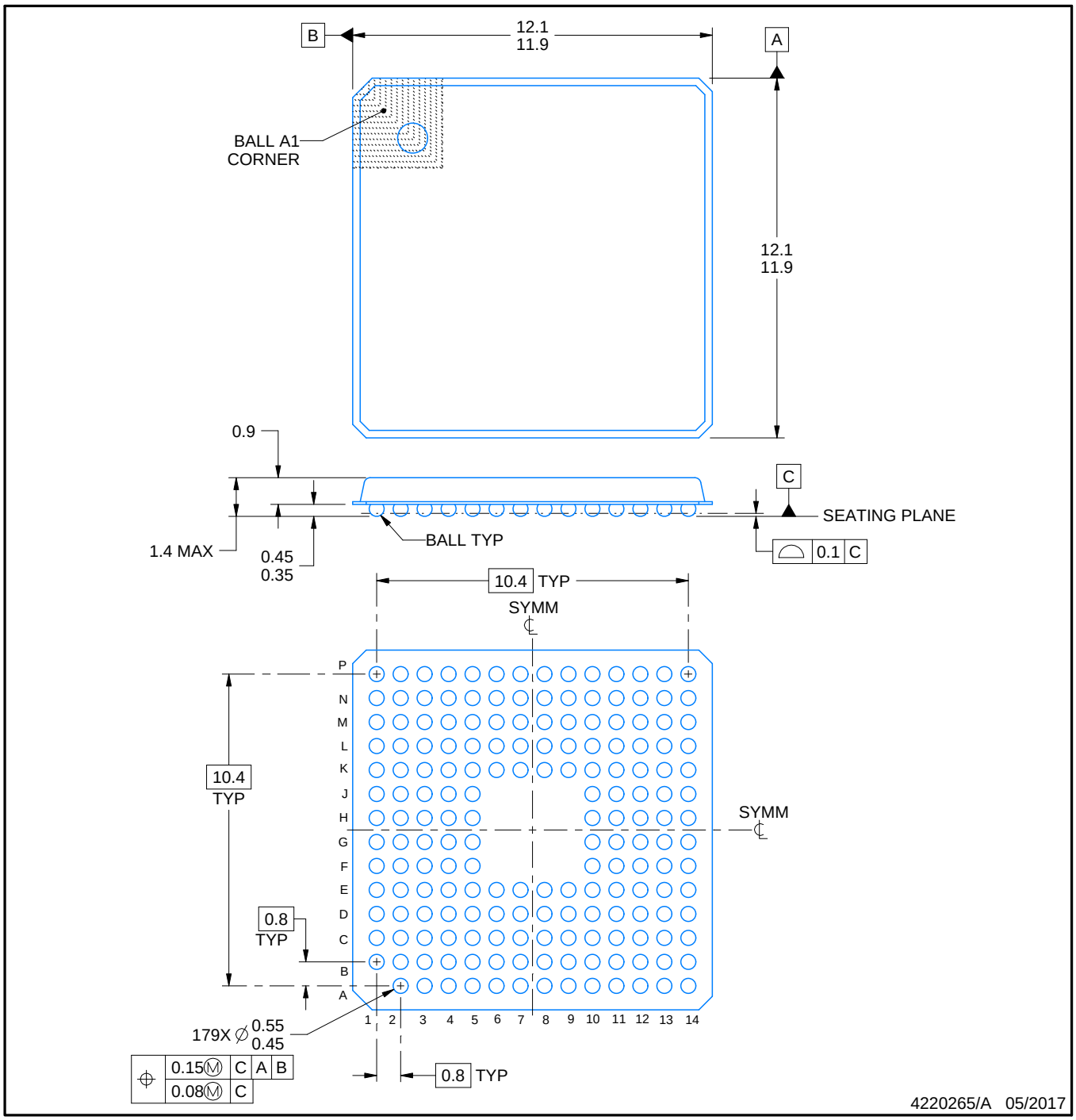

NOTES:

1. All linear dimensions are in millimeters. Any dimensions in parenthesis are for reference only. Dimensioning and tolerancing per ASME Y14.5M.
2. This drawing is subject to change without notice.
3. This is a Pb-free solder ball design.

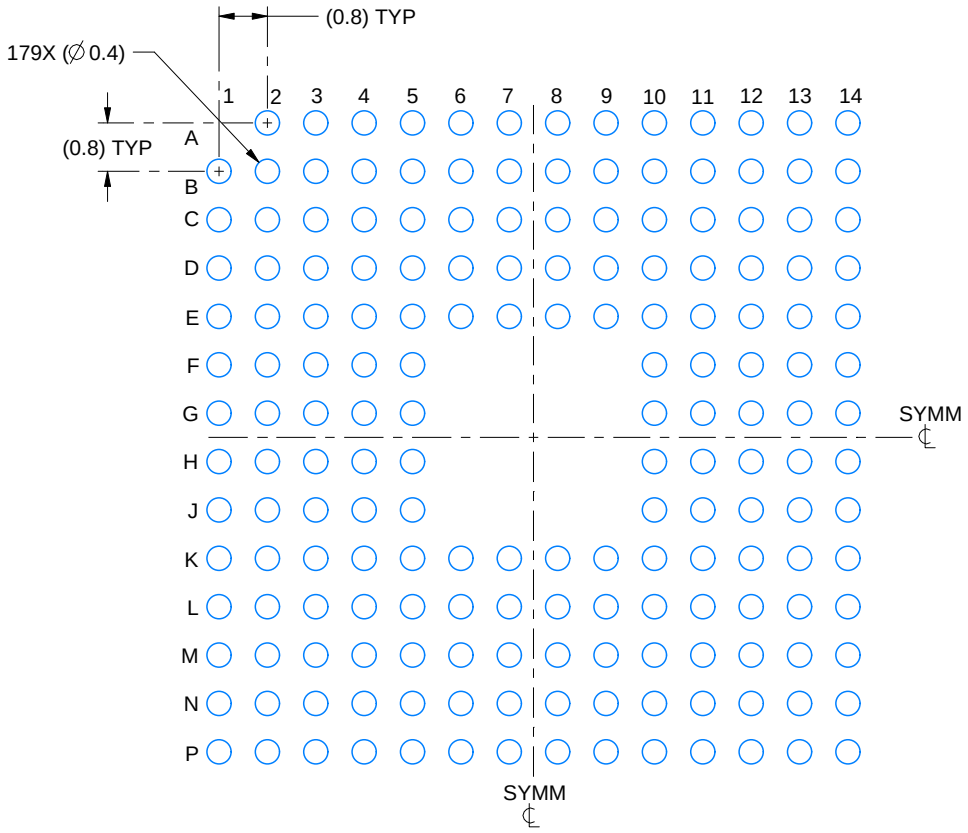

LAND PATTERN EXAMPLE
EXPOSED METAL SHOWN
SCALE: 8X

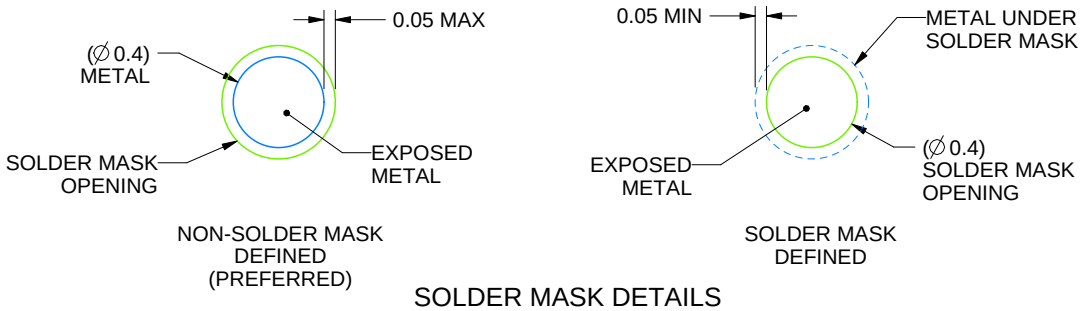

SOLDER MASK DETAILS
NOT TO SCALE

4220265/A 05/2017

NOTES: (continued)

4. Final dimensions may vary due to manufacturing tolerance considerations and also routing constraints.
See Texas Instruments Literature No. SSZA002 (www.ti.com/lit/ssza002).

EXAMPLE STENCIL DESIGN

ZHH0179A

UBGA - 1.4 mm max height

BALL GRID ARRAY

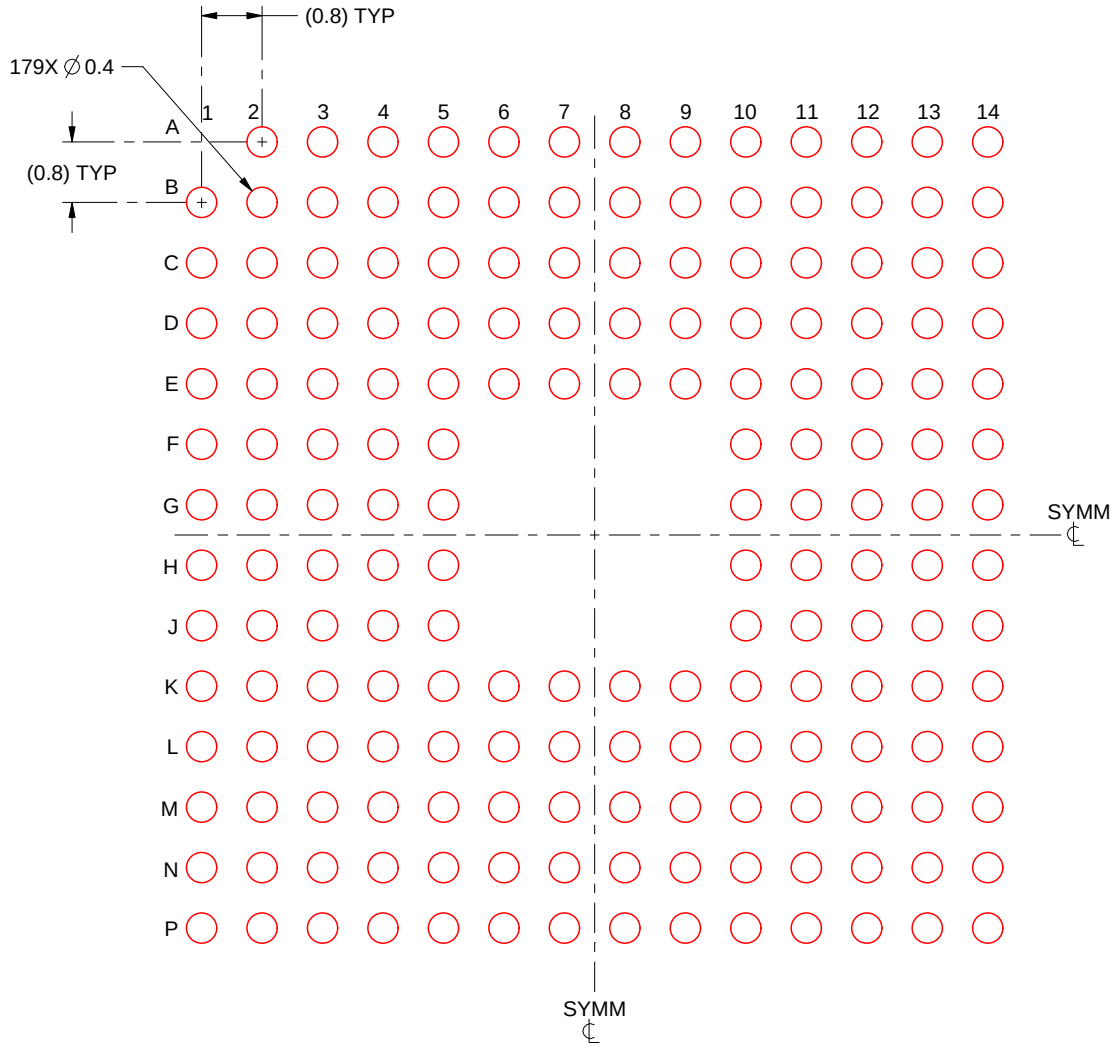

SOLDER PASTE EXAMPLE
BASED ON 0.15 mm THICK STENCIL
SCALE: 10X

4220265/A 05/2017

NOTES: (continued)

5. Laser cutting apertures with trapezoidal walls and rounded corners may offer better paste release.

MTQF017A – OCTOBER 1994 – REVISED DECEMBER 1996

PGE (S-PQFP-G144) **PLASTIC QUAD FLATPACK**

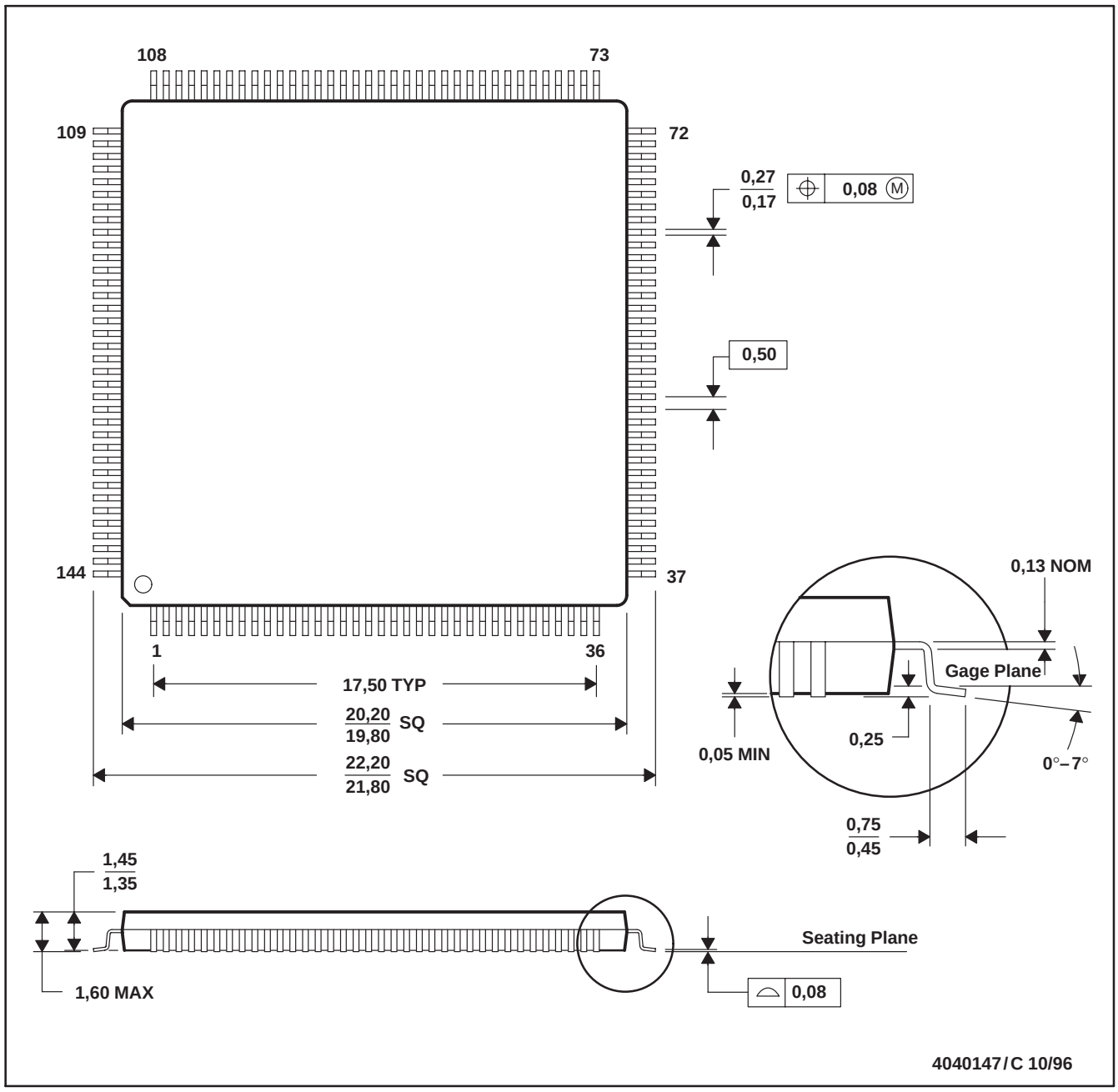

NOTES: A. All linear dimensions are in millimeters.
B. This drawing is subject to change without notice.
C. Falls within JEDEC MS-026

GHH (S–PBGA–N179) PLASTIC BALL GRID ARRAY

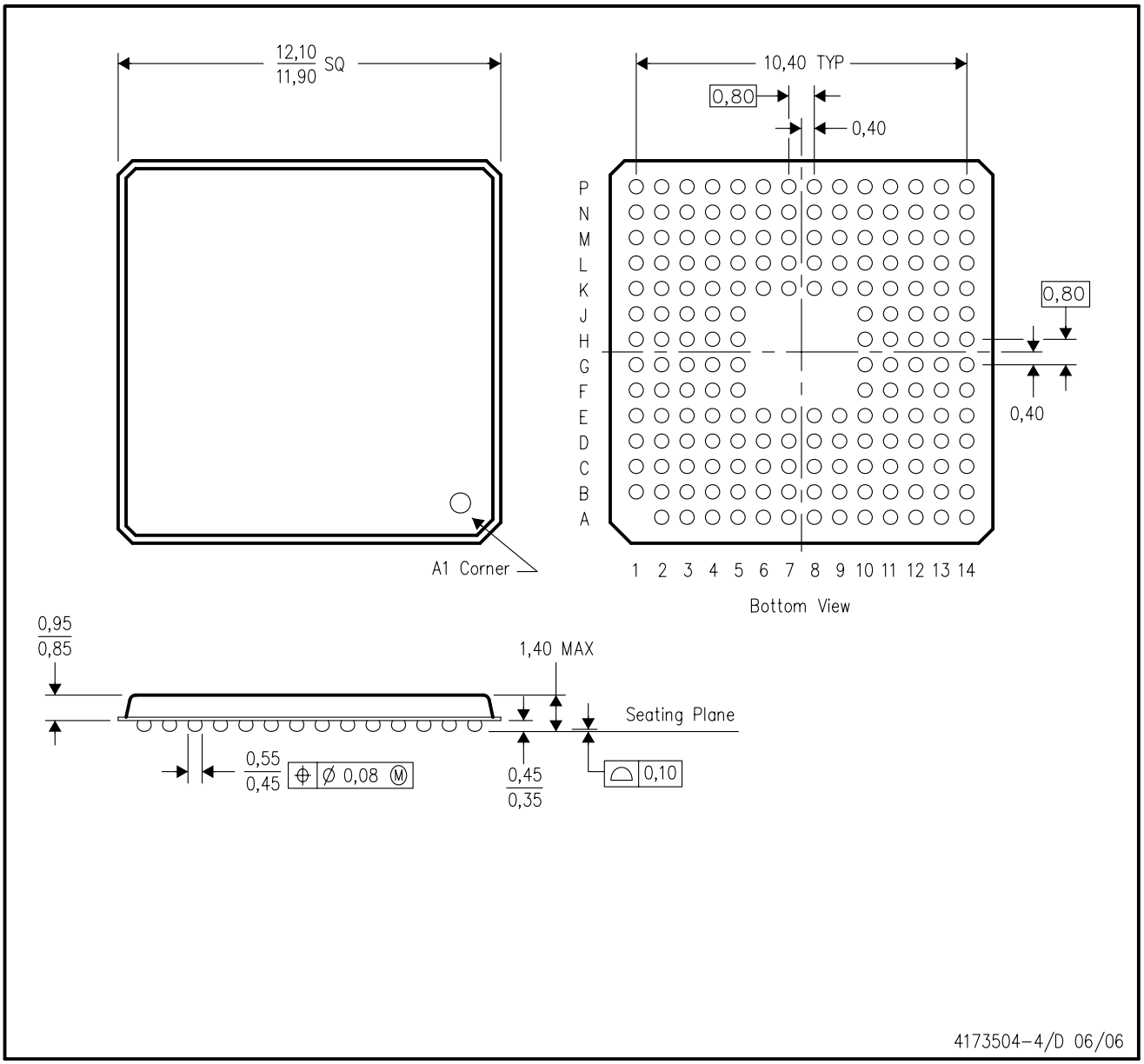

NOTES:
A. All linear dimensions are in millimeters.
B. This drawing is subject to change without notice.
C. Micro Star BGA configuration

IMPORTANT NOTICE AND DISCLAIMER

TI PROVIDES TECHNICAL AND RELIABILITY DATA (INCLUDING DATASHEETS), DESIGN RESOURCES (INCLUDING REFERENCE DESIGNS), APPLICATION OR OTHER DESIGN ADVICE, WEB TOOLS, SAFETY INFORMATION, AND OTHER RESOURCES “AS IS” AND WITH ALL FAULTS, AND DISCLAIMS ALL WARRANTIES, EXPRESS AND IMPLIED, INCLUDING WITHOUT LIMITATION ANY IMPLIED WARRANTIES OF MERCHANTABILITY, FITNESS FOR A PARTICULAR PURPOSE OR NON-INFRINGEMENT OF THIRD PARTY INTELLECTUAL PROPERTY RIGHTS.

These resources are intended for skilled developers designing with TI products. You are solely responsible for (1) selecting the appropriate TI products for your application, (2) designing, validating and testing your application, and (3) ensuring your application meets applicable standards, and any other safety, security, regulatory or other requirements.

These resources are subject to change without notice. TI grants you permission to use these resources only for development of an application that uses the TI products described in the resource. Other reproduction and display of these resources is prohibited. No license is granted to any other TI intellectual property right or to any third party intellectual property right. TI disclaims responsibility for, and you fully indemnify TI and its representatives against any claims, damages, costs, losses, and liabilities arising out of your use of these resources.

TI’s products are provided subject to TI’s Terms of Sale, TI’s General Quality Guidelines, or other applicable terms available either on ti.com or provided in conjunction with such TI products. TI’s provision of these resources does not expand or otherwise alter TI’s applicable warranties or warranty disclaimers for TI products. Unless TI explicitly designates a product as custom or customer-specified, TI products are standard, catalog, general purpose devices.

TI objects to and rejects any additional or different terms you may propose.

Copyright © 2026, Texas Instruments Incorporated

Last updated 10/2025

Looking for pricing, stock, or lifecycle information?

Click below to explore more details on WIN SOURCE:

- View TMS320VC5509AGBBR on WIN SOURCE
- Texas Instruments Information

Optimize Your Supply Chain with WIN SOURCE Solutions

- Global Sourcing Solution
- Obsolete Management
- Cost Control Management
- Shortage Management
- Alternative Solution
- Excess Inventory Management