TMS320C6745, TMS320C6747 Fixed- and Floating-Point Digital Signal Processor

1 TMS320C6745, TMS320C6747 Fixed- and Floating-Point Digital Signal Processor

1.1 Features

- Software Support
  - TI DSP/BIOS™
  - Chip Support Library and DSP Library
- 375- and 456-MHz TMS320C674x VLIW DSP
- C674x Instruction Set Features
  - Superset of the C67x+ and C64x+ ISAs
  - Up to 3648 MIPS and 2736 MFLOPS C674x
  - Byte-Addressable (8-, 16-, 32-, and 64-Bit Data)
  - 8-Bit Overflow Protection
  - Bit-Field Extract, Set, Clear
  - Normalization, Saturation, Bit-Counting
  - Compact 16-Bit Instructions
- C674x Two-Level Cache Memory Architecture
  - 32KB of L1P Program RAM/Cache
  - 32KB of L1D Data RAM/Cache
  - 256KB of L2 Unified Mapped RAM/Cache
  - Flexible RAM/Cache Partition (L1 and L2)
- Enhanced Direct Memory Access Controller 3 (EDMA3):
  - 2 Transfer Controllers
  - 32 Independent DMA Channels
  - 8 Quick DMA Channels
  - Programmable Transfer Burst Size
- TMS320C674x Fixed- and Floating-Point VLIW DSP Core
  - Load-Store Architecture with Nonaligned Support
  - 64 General-Purpose Registers (32-Bit)
  - Six ALU (32- and 40-Bit) Functional Units
    - Supports 32-Bit Integer, SP (IEEE Single Precision/32-Bit) and DP (IEEE Double Precision/64-Bit) Floating Point
    - Supports up to Four SP Additions Per Clock, Four DP Additions Every 2 Clocks
    - Supports up to Two Floating-Point (SP or DP) Reciprocal Approximation (RCPxP) and Square-Root Reciprocal Approximation (RSQRxP) Operations Per Cycle
  - Two Multiply Functional Units
    - Mixed-Precision IEEE Floating Point Multiply Supported up to:
      - 2 SP x SP -> SP Per Clock
      - 2 SP x SP -> DP Every Two Clocks
      - 2 SP x DP -> DP Every Three Clocks
      - 2 DP x DP -> DP Every Four Clocks
    - Fixed-Point Multiply Supports Two 32 x 32-Bit Multiplies, Four 16 x 16-Bit Multiplies, or Eight 8 x 8-Bit Multiplies per Clock Cycle, and Complex Multiples
  - Instruction Packing Reduces Code Size
  - All Instructions Conditional
  - Hardware Support for Modulo Loop Operation
  - Protected Mode Operation
  - Exceptions Support for Error Detection and Program Redirection
- 128KB of RAM Shared Memory (TMS320C6747 Only)
- 3.3-V LVCMOS I/Os (Except for USB Interfaces)
- Two External Memory Interfaces:
  - EMIFA
    - NOR (8- or 16-Bit-Wide Data)
    - NAND (8- or 16-Bit-Wide Data)
    - 16-Bit SDRAM with 128-MB Address Space (TMS320C6747 Only)
  - EMIFB
    - 32-Bit or 16-Bit SDRAM with 256-MB Address Space (TMS320C6747)
    - 16-Bit SDRAM with 128-MB Address Space (TMS320C6745)
- Three Configurable 16550-Type UART Modules:
  - UART0 with Modem Control Signals
  - Autoflow Control Signals (CTS, RTS) on UART0 Only
  - 16-Byte FIFO
  - 16x or 13x Oversampling Option
- LCD Controller (TMS320C6747 Only)
- Two Serial Peripheral Interfaces (SPIs) Each with One Chip Select
- Multimedia Card (MMC)/Secure Digital (SD) Card Interface with Secure Data I/O (SDIO)
- Two Master and Slave Inter-Integrated Circuit (I^2C Bus™)
- One Host-Port Interface (HPI) with 16-Bit-Wide Muxed Address/Data Bus for High Bandwidth (TMS320C6747 Only)
- Programmable Real-Time Unit Subsystem (PRUSS)
  - Two Independent Programmable Realtime Unit (PRU) Cores
    - 32-Bit Load and Store RISC Architecture
    - 4KB of Instruction RAM per Core
    - 512 Bytes of Data RAM per Core

An IMPORTANT NOTICE at the end of this data sheet addresses availability, warranty, changes, use in safety-critical applications, intellectual property matters and other important disclaimers. PRODUCTION DATA.

  - PRUSS can be Disabled via Software to Save Power
  - Standard Power-Management Mechanism
    - Clock Gating
    - Entire Subsystem Under a Single PSC Clock Gating Domain
  - Dedicated Interrupt Controller
  - Dedicated Switched Central Resource
- USB 1.1 OHCI (Host) with Integrated PHY (USB1) (TMS320C6747 Only)
- USB 2.0 OTG Port with Integrated PHY (USB0)
  - USB 2.0 High- and Full-Speed Client (TMS320C6747)
  - USB 2.0 Full-Speed Client (TMS320C6745)
  - USB 2.0 High-, Full-, and Low-Speed Host (TMS320C6747)
  - USB 2.0 Full- and Low-Speed Host (TMS320C6745)
  - High-Speed Functionality Available on TMS320C6747 Device Only
  - End Point 0 (Control)
  - End Points 1,2,3,4 (Control, Bulk, Interrupt or ISOC) RX and TX
- Three Multichannel Audio Serial Ports (McASPs):
  - TMS320C6747 Supports 3 McASPs
  - TMS320C6745 Supports 2 McASPs
  - Six Clock Zones and 28 Serial Data Pins
  - Supports TDM, I2S, and Similar Formats
  - DIT-Capable (McASP2)
  - FIFO Buffers for Transmit and Receive
- 10/100 Mbps Ethernet MAC (EMAC):
  - IEEE 802.3 Compliant (3.3-V I/O Only)
  - RMII Media-Independent Interface
  - Management Data I/O (MDIO) Module
- Real-Time Clock with 32-kHz Oscillator and Separate Power Rail (TMS320C6747 Only)
- One 64-Bit General-Purpose Timer (Configurable as Two 32-Bit Timers)
- One 64-Bit General-Purpose Watchdog Timer (Configurable as Two 32-Bit General-Purpose Timers)
- Three Enhanced Pulse Width Modulators (eHRPWMs):
  - Dedicated 16-Bit Time-Base Counter with Period and Frequency Control
  - 6 Single Edge, 6 Dual Edge Symmetric, or 3 Dual Edge Asymmetric Outputs
  - Dead-Band Generation
  - PWM Chopping by High-Frequency Carrier
  - Trip Zone Input
- Three 32-Bit Enhanced Capture (eCAP) Modules:
  - Configurable as 3 Capture Inputs or 3 Auxiliary Pulse Width Modulator (APWM) Outputs
  - Single-Shot Capture of up to Four Event Time-Stamps
- Two 32-Bit Enhanced Quadrature Encoder Pulse (eQEP) Modules
- TMS320C6747 Device:
  - 256-Ball Pb-Free Plastic Ball Grid Array (PBGA) [ZKB Suffix], 1.0-mm Ball Pitch
- TMS320C6745 Device:
  - 176-pin PowerPAD™ Plastic Quad Flat Pack [PTP suffix], 0.5-mm Pin Pitch
- Commercial, Industrial, Extended, or Automotive Temperature

1.2 Applications

- A/V Receivers
- Automotive Amplifiers
- Soundbars
- Home Theatre Systems
- Professional Audio
- Network Streaming Audio

1.3 Description

The TMS320C6745/6747 device is a low-power digital signal processor based on a TMS320C674x DSP core. It consumes significantly lower power than other members of the TMS320C6000™ platform of DSPs.

The TMS320C6745/6747 device enables original-equipment manufacturers (OEMs) and original-design manufacturers (ODMs) to quickly bring to market devices featuring high processing performance .

The TMS320C6745/6747 DSP core uses a two-level cache-based architecture. The Level 1 program cache (L1P) is a 32-KB direct mapped cache and the Level 1 data cache (L1D) is a 32-KB 2-way set-associative cache. The Level 2 program cache (L2P) consists of a 256-KB memory space that is shared between program and data space. L2 memory can be configured as mapped memory, cache, or combinations of the two. Although the DSP L2 is accessible by other hosts in the system, an additional 128KB of RAM shared memory (TMS320C6747 only) is available for use by other hosts without affecting DSP performance.

Copyright © 2008–2014, Texas Instruments Incorporated

The peripheral set includes: a 10/100 Mbps Ethernet MAC (EMAC) with a management data input/output (MDIO) module; two I^2C Bus interfaces; 3 multichannel audio serial ports (McASPs) with 16/9 serializers and FIFO buffers; two 64-bit general-purpose timers each configurable (one configurable as watchdog); a configurable 16-bit host-port interface (HPI) [TMS320C6747 only]; up to 8 banks of 16 pins of general-purpose input/output (GPIO) with programmable interrupt/event generation modes, multiplexed with other peripherals; 3 UART interfaces (one with both $\overline{RTS}$ and $\overline{CTS}$); three enhanced high-resolution pulse width modulator (eHRPWM) peripherals; three 32-bit enhanced capture (eCAP) module peripherals which can be configured as 3 capture inputs or 3 auxiliary pulse width modulator (APWM) outputs; two 32-bit enhanced quadrature encoded pulse (eQEP) peripherals; and 2 external memory interfaces: an asynchronous and SDRAM external memory interface (EMIFA) for slower memories or peripherals, and a higher speed memory interface (EMIFB) for SDRAM.

The Ethernet Media Access Controller (EMAC) provides an efficient interface between the TMS320C6745/6747 device and the network. The EMAC supports both 10Base-T and 100Base-TX, or 10 Mbps and 100 Mbps in either half- or full-duplex mode. Additionally, an MDIO interface is available for PHY configuration.

The rich peripheral set provides the ability to control external peripheral devices and communicate with external processors. For details on each of the peripherals, see the related sections later in this document and the associated peripheral reference guides.

Device Information(1)

PART NUMBER	PACKAGE	BODY SIZE
TMS320C6745	HLQFP (176)	24.00 mm x 24.00 mm
TMS320C6747	BGA (256)	17.00 mm x 17.00 mm

(1) For more information on these devices, see Section 8, Mechanical Packaging and Orderable Information.

Copyright © 2008–2014, Texas Instruments Incorporated

1.4 Functional Block Diagram

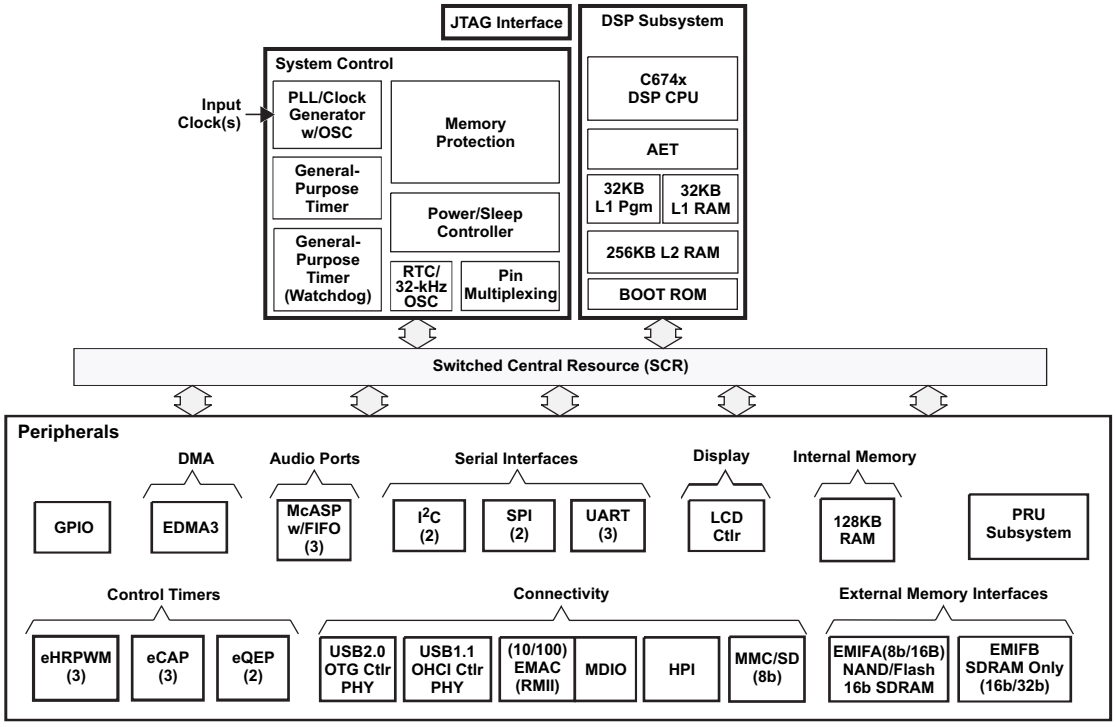

Note: Not all peripherals are available at the same time due to multiplexing. See Table 3-1 for details on which device components are available on each device.

Figure 1-1. TMS320C6747 Functional Block Diagram

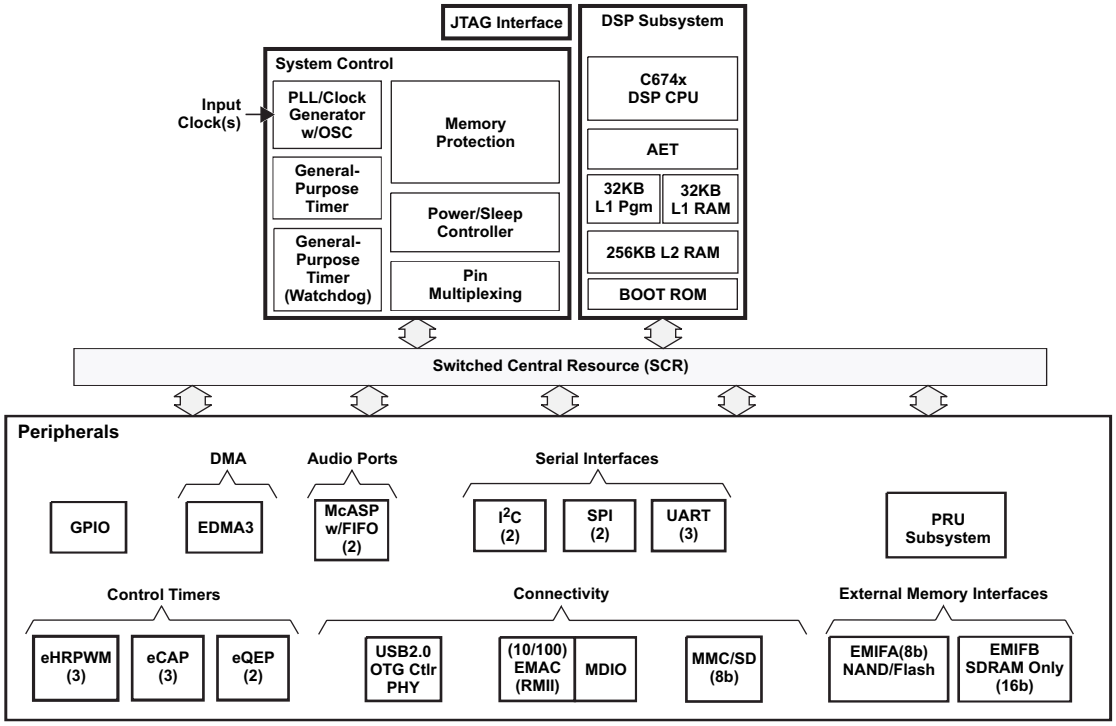

Note: Not all peripherals are available at the same time due to multiplexing. See Table 3-1 for details on which device components are available on each device.

Figure 1-2. TMS320C6745 Functional Block Diagram

Copyright © 2008–2014, Texas Instruments Incorporated

Table of Contents

1 TMS320C6745, TMS320C6747 Fixed- and Floating-Point Digital Signal Processor 1
1.1 Features 1
1.2 Applications 2
1.3 Description 2
1.4 Functional Block Diagram 4
2 Revision History 6
3 Device Overview 8
3.1 Device Characteristics 8
3.2 Device Compatibility 9
3.3 DSP Subsystem 10
3.4 Memory Map Summary 21
3.5 Pin Assignments 26
3.6 Terminal Functions 28
4 Device Configuration 56
4.1 Boot Modes 56
4.2 SYSCFG Module 57
4.3 Pullup/Pulldown Resistors 59
5 Device Operating Conditions 60
5.1 Absolute Maximum Ratings Over Operating Case Temperature Range (Unless Otherwise Noted) 60
5.2 Handling Ratings 60
5.3 Recommended Operating Conditions 61
5.4 Notes on Recommended Power-On Hours (POH) 62
5.5 Electrical Characteristics Over Recommended Ranges of Supply Voltage and Operating Case Temperature (Unless Otherwise Noted) 63
6 Peripheral Information and Electrical Specifications 64
6.1 Parameter Information 64
6.2 Recommended Clock and Control Signal Transition Behavior 65
6.3 Power Supplies 65
6.4 Reset 66
6.5 Crystal Oscillator or External Clock Input 69
6.6 Clock PLLs 71
6.7 Interrupts 75
6.8 General-Purpose Input/Output (GPIO) 79
6.9 EDMA 82
6.10 External Memory Interface A (EMIFA) 87
6.11 External Memory Interface B (EMIFB) 98
6.12 Memory Protection Units 106
6.13 MMC / SD / SDIO (MMCSD) 109
6.14 Ethernet Media Access Controller (EMAC) 112
6.15 Management Data Input/Output (MDIO) 117
6.16 Multichannel Audio Serial Ports (McASP0, McASP1, and McASP2) 119
6.17 Serial Peripheral Interface Ports (SPI0, SPI1) 132
6.18 Enhanced Capture (eCAP) Peripheral 151
6.19 Enhanced Quadrature Encoder (eQEP) Peripheral 154
6.20 Enhanced High-Resolution Pulse-Width Modulator (eHRPWM) 156
6.21 LCD Controller 160
6.22 Timers 175
6.23 Inter-Integrated Circuit Serial Ports (I2C0, I2C1) 177
6.24 Universal Asynchronous Receiver/Transmitter (UART) 182
6.25 USB1 Host Controller Registers (USB1.1 OHCI) 184
6.26 USB0 OTG (USB2.0 OTG) 185
6.27 Host-Port Interface (UHPI) 193
6.28 Power and Sleep Controller (PSC) 200
6.29 Programmable Real-Time Unit Subsystem (PRUSS) 203
6.30 Emulation Logic 206
6.31 IEEE 1149.1 JTAG 209
6.32 Real Time Clock (RTC) 211
7 Device and Documentation Support 214
7.1 Device Support 214
7.2 Documentation Support 215
7.3 Support Resources 216
7.4 Related Links 216
7.5 Trademarks 216
7.6 Electrostatic Discharge Caution 216
7.7 Glossary 216
8 Mechanical Packaging and Orderable Information 217
8.1 Thermal Data for ZKB 217
8.2 Thermal Data for PTP 218
8.3 Supplementary Information About the 176-pin PTP PowerPAD™ Package 218
8.4 Packaging Information 219

Copyright © 2008–2014, Texas Instruments Incorporated

2 Revision History

NOTE: Page numbers for previous revisions may differ from page numbers in the current version.

This data manual revision history highlights the changes made to the SPRS377E device-specific data manual to make it an SPRS377F revision.

Scope: Applicable updates to the TMS320C6747/C6745 Fixed- and Floating-Point Digital Signal Processor device family, specifically relating to the TMS320C6747 and TMS320C6745 devices, which are all now in the production data (PD) stage of development, have been incorporated.

Revision History

SEE	ADDITIONS/MODIFICATIONS/DELETIONS
Global	• Turned on Navigation Icons on top of first page. • Updated Features, Applications, and Description for consistency and translation. • Moved Trademarks information from first page to within Section 7, Device and Documentation Support. • Moved ESDS Warning to within Section 7, Device and Documentation Support.
Section 1.1 Features	Deleted Highlights section. Information was duplicated elsewhere in Features.
Section 1.2 Applications	Added **NEW** section.
Section 1.3 Description	Added **NEW** Device Information Table.
Section 3.3.2.3 C674x CPU	Table 3-2, C674x Cache Registers: • Updated/Changed REGISTER DESCRIPTION for BYTE ADDRESSES 0000, 0020, and 0040 from "...See the System reference Guide..." to "See the Technical Reference Manual..."
Section 3.6 Terminal Functions	Table 3-21, Universal Serial Bus (USB) Terminal Functions: • Updated/Changed USB0_VDDA12 DESCRIPTION from "...must always be connected via a 1 μF capacitor..." to "...**is recommended** to be connected via a **0.22-μF** capacitor..."
Section 3.6.11 Universal Asynchronous Receiver/Transmitters (UART0, UART1, UART2)	Table 3-16, Universal Asynchronous Receiver/Transmitter (UART) Terminal Functions: • Updated/Changed footnote from "...DSP Reference Guide - Literature Number SPRUFK4..." to "...DSP Technical Reference Manual (SPRUH91)..."
Section 3.6.21 Reserved and No Connect	Table 3-26, Reserved and No Connect Terminal Functions: • Updated/Changed RSV4 DESCRIPTION from "...This pin may be tied high or low." to "...For proper device operation, this pin must be tied low or to CVDD."
Section 3.6.23 Unused USB0 (USB2.0) and USB1 (USB1.1) Pin Configurations	Moved to within Section 3.6, Terminal Functions
	Table 3-28, Unused USB0 and USB1 Pin Configurations: • Updated/Changed USB0_VDDA12 Configuration by combining both Configuration columns and changing text to "**Internal USB0 PHY output connected to an external...**"
Section 5 Device Operating Conditions	Section 5.2, Handling Ratings: • Split handling, ratings, and certifications from the Abs Max table and placed in **NEW** Handling Ratings table.
Section 5.4 Notes on Recommended Power-On Hours (POH)	Table 5-1, Recommended Power-On Hours: • Added Silicon Revision column.
Section 6.10.6 EMIFA Electrical Data/Timing	Table 6-22, EMIFA Asynchronous Memory Switching Characteristics: • Updated/Changed the MIN, NOM, and MAX equations for NO. 3, 10, 15, and 24 from "...(EWC*16)..." to "**...EWC...**" Section 5.3, Recommended Operating Conditions: • Added "Unless specifically indicated" to "These I/O specifications apply to ..." footnote

Copyright © 2008–2014, Texas Instruments Incorporated

Revision History (continued)

SEE	ADDITIONS/MODIFICATIONS/DELETIONS
Section 6.11.3 EMIFB Electrical Data/Timing	Table 6-26, EMIFB SDRAM Interface Timing Requirements: • Updated/Changed Parameter No. 19 from "$t_{su(DV-CLKH)}$" to "$t_{(DV-CLKH)}$" • Added new column: "CVDD = 1.3V" • Added new footnote containing "...range rated devices for 456 MHz max CPU operating..." • Added new footnote containing "...range rated devices for 400/375/300/266/200 MHz max CPU operating ..." Table 6-27, EMIFB SDRAM Interface Switching Characteristics for Commercial (Default) Temperature Range: • Updated/Changed table title from "...Switching Characteristics..." to "...Switching Characteristics **for Commercial (Default) Temperature Range**" • Added new footnote containing "...range rated devices for 456 MHz max CPU operating ..." • Added new footnote containing "...range rated devices for 400/375/300/266/200 MHz max CPU operating..." • Updated/Changed CVDD = 1.3V MIN column values for Parameter No. 4, 6, 8, 10, 12, 14, 16, and 18 from "0.9" to "**1.1**" • Updated/Changed CVDD = 1.3V MAX column values for Parameter No. 3, 5, 7, 9, 11, 13, 15, and 17 from "5.1" to "**4.25**" • Populated CVDD = 1.2V column with values (was empty) • Updated/Changed Parameter No. 18 from "$t_{ena(CLKH-DLZ)}$" to "$t_{(CLKH-DLZ)}$" Table 6-28, EMIFB SDRAM Interface Switching Characteristics for Industrial, Extended, and Automotive Temperature Ranges: • Added **NEW** table
Section 6.16 Multichannel Audio Serial Ports (McASP0, McASP1, and McASP2)	Table 6-45, McASP Registers Accessed Through DMA Port: • Updated/Changed Read Accesses Register Description from "XBUSEL = 0 in XFMT" to "RBUSEL = 0 in RFMT" • Updated/Changed Write Accesses Register Description from "RBUSEL = 0 in RFMT" to "XBUSEL = 0 in XFMT"
Section 7.4 Related Links	Added **NEW** section.
Section 7.7 Glossary	Added **NEW** section.

Copyright © 2008–2014, Texas Instruments Incorporated

3 Device Overview

3.1 Device Characteristics

Table 3-1 provides an overview of the C6745/6747 low power digital signal processor. The table shows significant features of the device, including the capacity of on-chip RAM, peripherals, and the package type with pin count.

Table 3-1. Characteristics of the C6745/C6747 Processor

HARDWARE FEATURES		C6745	C6747
Peripherals Not all peripherals pins are available at the same time (for more detail, see the Device Configurations section).	EMIFB	16bit, up to 128MB SDRAM	16/32bit, up to 256MB SDRAM
	EMIFA	Asynchronous (8-bit bus width) RAM, Flash, NOR, NAND	Asynchronous (8/16-bit bus width) RAM, Flash, 16bit up to 128MB SDRAM, NOR, NAND
	Flash Card Interface	MMC and SD cards supported.	
	EDMA3	32 independent channels, 8 QDMA channels, 2 Transfer controllers	
	Timers	2 64-Bit General Purpose (each configurable as 2 separate 32-bit timers, 1 configurable as Watch Dog)	
	UART	3 (one with RTS and CTS flow control)	
	SPI	2 (each with one hardware chip select)	
	I^2C	2 (both Master/Slave)	
	Multichannel Audio Serial Port [McASP]	2 (each with transmit/receive, FIFO buffer, 16/9 serializers)	3 (each with transmit/receive, FIFO buffer, 16/9 serializers)
	10/100 Ethernet MAC with Management Data I/O	1 (RMII Interface)	
	eHRPWM	6 Single Edge, 6 Dual Edge Symmetric, or 3 Dual Edge Asymmetric Outputs	
	eCAP	3 32-bit capture inputs or 3 32-bit auxiliary PWM outputs	
	eQEP	2 32-bit QEP channels with 4 inputs/channel	
	UHPI	-	1 (16-bit multiplexed address/data)
	USB 2.0 (USB0)	Full Speed Host Or Device with On-Chip PHY	High-Speed OTG Controller with on-chip OTG PHY
	USB 1.1 (USB1)	-	Full-Speed OHCI (as host) with on-chip PHY
	General-Purpose Input/Output Port	8 banks of 16-bit	
	LCD Controller	-	1
	RTC	-	1 (32 KHz oscillator and seperate power trail. Provides time and date tracking and alarm capability.)
	PRU Subsystem (PRUSS)	2 Programmable PRU Cores	
On-Chip Memory	Size (Bytes)	320 KB RAM	448 KB RAM
	Organization	**DSP** 32KB L1 Program (L1P)/Cache (up to 32KB) 32KB L1 Data (L1D)/Cache (up to 32KB) 256KB Unified Mapped RAM/Cache (L2) DSP Memories can be made accessible to EDMA3, and other peripherals.	
		-	**ADDITIONAL MEMORY** 128KB RAM
C674x CPU ID + CPU Rev ID	Control Status Register (CSR.[31:16])	0x1400	
C674x Megamodule Revision	Revision ID Register (MM_REVID[15:0])	0x0000	

Copyright © 2008–2014, Texas Instruments Incorporated

Table 3-1. Characteristics of the C6745/C6747 Processor (continued)

HARDWARE FEATURES		C6745	C6747
JTAG BSDL_ID	DEVIDR0 register	0x0B7D F02F (Silicon Revision 1.0) 0x8B7D F02F (Silicon Revision 1.1) 0x9B7D F02F (Silicon Revisions 3.0, 2.1, and 2.0)	
CPU Frequency	MHz	674x DSP at 375 MHz(1.2V) or 456 MHz (1.3V)	
Voltage	Core (V)	1.2V / 1.3V	
	I/O (V)	3.3 V	
Package		24 mm x 24 mm, 176-Pin, 0.5 mm pitch, TQFP (PTP)	17 mm x 17 mm, 256-Ball 1 mm pitch, PBGA (ZKB)
Product Status(1)	Product Preview (PP), Advance Information (AI), or Production Data (PD)	375 MHz Versions -PD 456 MHz Version - PD	

(1) PRODUCTION DATA information is current as of publication date. Products conform to specifications per the terms of the Texas Instruments standard warranty. Production processing does not necessarily include testing of all parameters.

3.2 Device Compatibility

The C674x DSP core is code-compatible with the C6000™ DSP platform and supports features of both the C64x+ and C67x+ DSP families.

Copyright © 2008–2014, Texas Instruments Incorporated

3.3 DSP Subsystem

The DSP Subsystem includes the following features:

- C674x DSP CPU
- 32KB L1 Program (L1P)/Cache (up to 32KB)
- 32KB L1 Data (L1D)/Cache (up to 32KB)
- 256KB Unified Mapped RAM/Cache (L2)
- Boot ROM (cannot be used for application code)
- Little endian

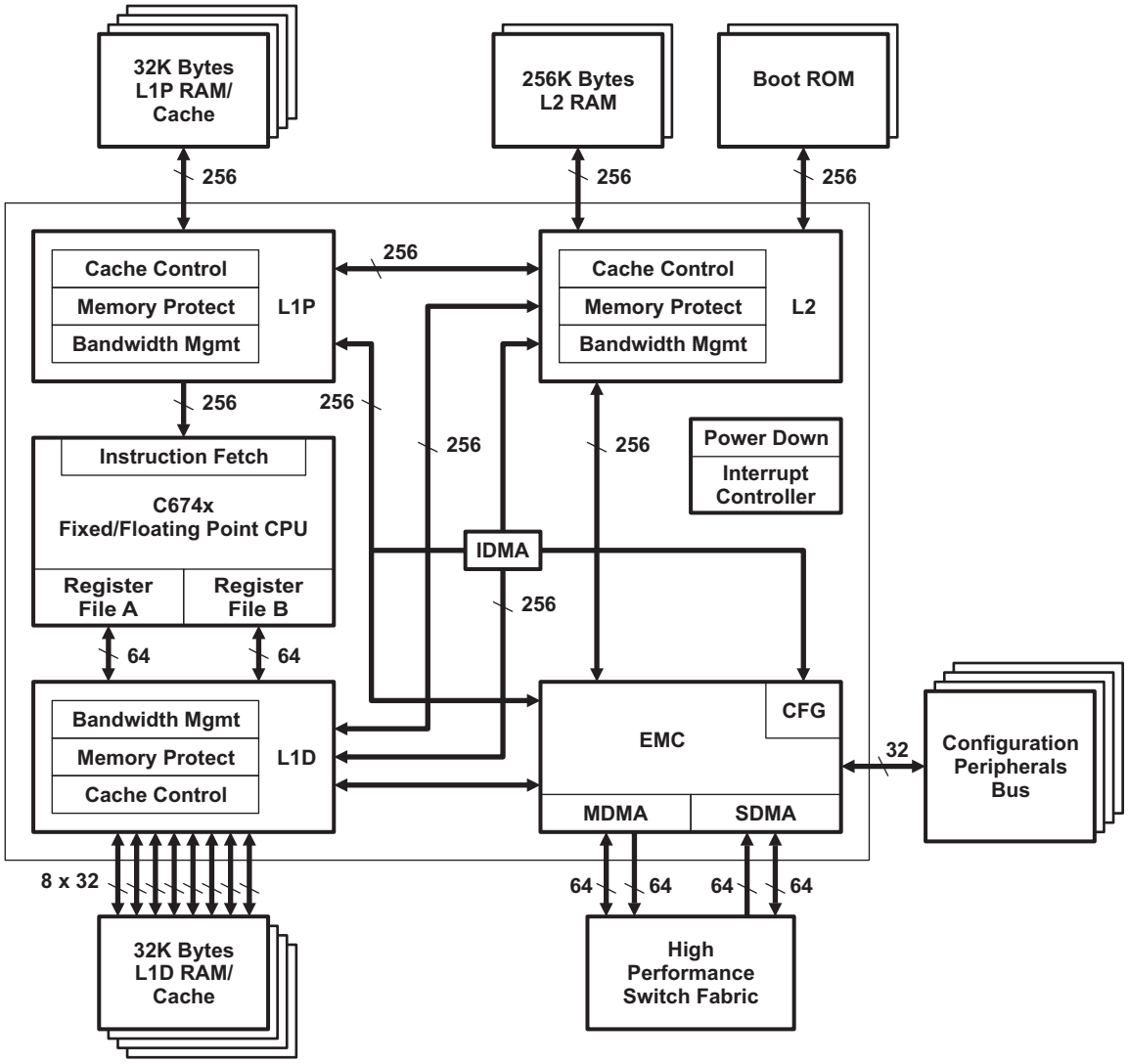

Figure 3-1. C674x Megamodule Block Diagram

Copyright © 2008–2014, Texas Instruments Incorporated

3.3.1 C674x DSP CPU Description

The C674x Central Processing Unit (CPU) consists of eight functional units, two register files, and two data paths as shown in Figure 3-2. The two general-purpose register files (A and B) each contain 32 32-bit registers for a total of 64 registers. The general-purpose registers can be used for data or can be data address pointers. The data types supported include packed 8-bit data, packed 16-bit data, 32-bit data, 40-bit data, and 64-bit data. Values larger than 32 bits, such as 40-bit-long or 64-bit-long values are stored in register pairs, with the 32 LSBs of data placed in an even register and the remaining 8 or 32 MSBs in the next upper register (which is always an odd-numbered register).

The eight functional units (.M1, .L1, .D1, .S1, .M2, .L2, .D2, and .S2) are each capable of executing one instruction every clock cycle. The .M functional units perform all multiply operations. The .S and .L units perform a general set of arithmetic, logical, and branch functions. The .D units primarily load data from memory to the register file and store results from the register file into memory.

The C674x CPU combines the performance of the C64x+ core with the floating-point capabilities of the C67x+ core.

Each C674x .M unit can perform one of the following each clock cycle: one 32 x 32 bit multiply, one 16 x 32 bit multiply, two 16 x 16 bit multiplies, two 16 x 32 bit multiplies, two 16 x 16 bit multiplies with add/subtract capabilities, four 8 x 8 bit multiplies, four 8 x 8 bit multiplies with add operations, and four 16 x 16 multiplies with add/subtract capabilities (including a complex multiply). There is also support for Galois field multiplication for 8-bit and 32-bit data. Many communications algorithms such as FFTs and modems require complex multiplication. The complex multiply (CMPY) instruction takes four 16-bit inputs and produces a 32-bit real and a 32-bit imaginary output. There are also complex multiplies with rounding capability that produces one 32-bit packed output that contain 16-bit real and 16-bit imaginary values. The 32 x 32 bit multiply instructions provide the extended precision necessary for high-precision algorithms on a variety of signed and unsigned 32-bit data types.

The .L Unit (or Arithmetic Logic Unit) now incorporates the ability to do parallel add/subtract operations on a pair of common inputs. Versions of this instruction exist to work on 32-bit data or on pairs of 16-bit data performing dual 16-bit add and subtracts in parallel. There are also saturated forms of these instructions.

The C674x core enhances the .S unit in several ways. On the previous cores, dual 16-bit MIN2 and MAX2 comparisons were only available on the .L units. On the C674x core they are also available on the .S unit which increases the performance of algorithms that do searching and sorting. Finally, to increase data packing and unpacking throughput, the .S unit allows sustained high performance for the quad 8-bit/16-bit and dual 16-bit instructions. Unpack instructions prepare 8-bit data for parallel 16-bit operations. Pack instructions return parallel results to output precision including saturation support.

Other new features include:

- **SPLOOP** - A small instruction buffer in the CPU that aids in creation of software pipelining loops where multiple iterations of a loop are executed in parallel. The SPLOOP buffer reduces the code size associated with software pipelining. Furthermore, loops in the SPLOOP buffer are fully interruptible.
- **Compact Instructions** - The native instruction size for the C6000™ devices is 32 bits. Many common instructions such as MPY, AND, OR, ADD, and SUB can be expressed as 16 bits if the C674x compiler can restrict the code to use certain registers in the register file. This compression is performed by the code generation tools.
- **Instruction Set Enhancement** - As noted above, there are new instructions such as 32-bit multiplications, complex multiplications, packing, sorting, bit manipulation, and 32-bit Galois field multiplication.
- **Exceptions Handling** - Intended to aid the programmer in isolating bugs. The C674x CPU is able to detect and respond to exceptions, both from internally detected sources (such as illegal op-codes) and from system events (such as a watchdog time expiration).
- **Privilege** - Defines user and supervisor modes of operation, allowing the operating system to give a basic level of protection to sensitive resources. Local memory is divided into multiple pages, each with read, write, and execute permissions.

Copyright © 2008–2014, Texas Instruments Incorporated

- **Time-Stamp Counter** - Primarily targeted for Real-Time Operating System (RTOS) robustness, a free-running time-stamp counter is implemented in the CPU which is ***not*** sensitive to system stalls.

For more details on the C674x CPU and its enhancements over the C64x architecture, see the following documents:

- *TMS320C64x/C64x+ DSP CPU and Instruction Set Reference Guide* (SPRU732)
- *TMS320C64x Technical Overview* (SPRU395)

Copyright © 2008–2014, Texas Instruments Incorporated

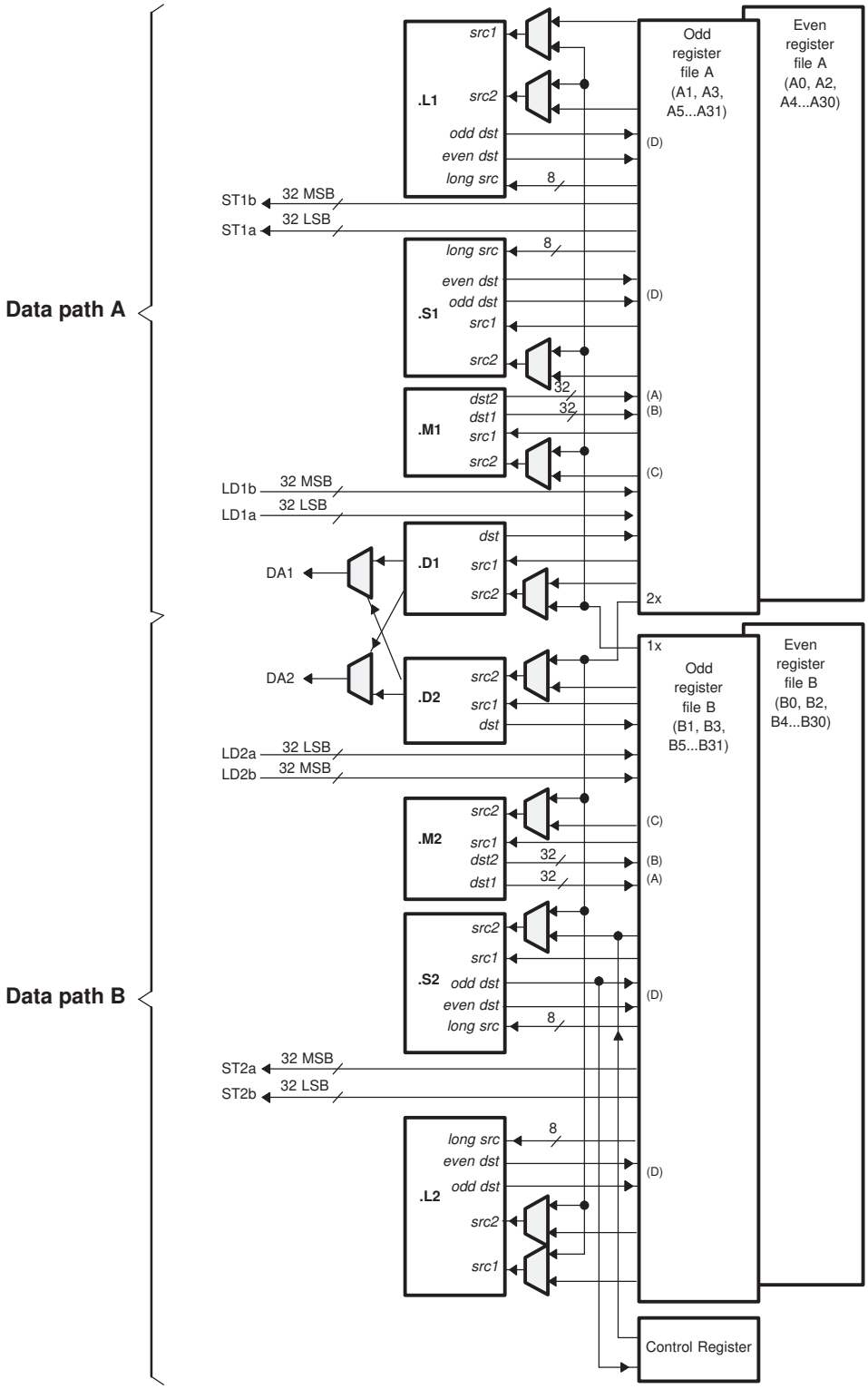

A. On .M unit, *dst2* is 32 MSB.
B. On .M unit, *dst1* is 32 LSB.
C. On C64x CPU .M unit, *src2* is 32 bits; on C64x+ CPU .M unit, *src2* is 64 bits.
D. On .L and .S units, *odd dst* connects to odd register files and *even dst* connects to even register files.

Figure 3-2. TMS320C674x CPU (DSP Core) Data Paths

3.3.2 DSP Memory Mapping

The DSP memory map is shown in Section 3.4.

3.3.2.1 External Memories

The DSP has access to the following External memories:

- Asynchronous EMIF / SDRAM / NAND / NOR Flash (EMIFA)
- SDRAM (EMIFB)

3.3.2.2 DSP Internal Memories

The DSP has access to the following DSP memories:

- L2 RAM
- L1P RAM
- L1D RAM

3.3.2.3 C674x CPU

The C674x core uses a two-level cache-based architecture. The Level 1 Program cache (L1P) is 32 KB direct mapped cache and the Level 1 Data cache (L1D) is 32 KB 2-way set associated cache. The Level 2 memory/cache (L2) consists of a 256 KB memory space that is shared between program and data space. L2 memory can be configured as mapped memory, cache, or a combination of both.

Table 3-2 shows a memory map of the C674x CPU cache registers for the device.

Table 3-2. C674x Cache Registers

BYTE ADDRESS	ACRONYM	REGISTER DESCRIPTION
0x0184 0000	L2CFG	L2 Cache configuration register (See the Technical Reference Manual SPRUH91 for the reset configuration)
0x0184 0020	L1PCFG	L1P Size Cache configuration register (See the Technical Reference Manual SPRUH91 for the reset configuration)
0x0184 0024	L1PCC	L1P Freeze Mode Cache configuration register
0x0184 0040	L1DCFG	L1D Size Cache configuration register (See the Technical Reference Manual SPRUH91 for the reset configuration)
0x0184 0044	L1DCC	L1D Freeze Mode Cache configuration register
0x0184 0048 - 0x0184 0FFC	-	Reserved
0x0184 1000	EDMAWEIGHT	L2 EDMA access control register
0x0184 1004 - 0x0184 1FFC	-	Reserved
0x0184 2000	L2ALLOC0	L2 allocation register 0
0x0184 2004	L2ALLOC1	L2 allocation register 1
0x0184 2008	L2ALLOC2	L2 allocation register 2
0x0184 200C	L2ALLOC3	L2 allocation register 3
0x0184 2010 - 0x0184 3FFF	-	Reserved
0x0184 4000	L2WBAR	L2 writeback base address register
0x0184 4004	L2WWC	L2 writeback word count register
0x0184 4010	L2WIBAR	L2 writeback invalidate base address register
0x0184 4014	L2WIWC	L2 writeback invalidate word count register
0x0184 4018	L2IBAR	L2 invalidate base address register
0x0184 401C	L2IWC	L2 invalidate word count register
0x0184 4020	L1PIBAR	L1P invalidate base address register
0x0184 4024	L1PIWC	L1P invalidate word count register
0x0184 4030	L1DWIBAR	L1D writeback invalidate base address register
0x0184 4034	L1DWIWC	L1D writeback invalidate word count register

Copyright © 2008–2014, Texas Instruments Incorporated

Table 3-2. C674x Cache Registers (continued)

BYTE ADDRESS	ACRONYM	REGISTER DESCRIPTION
0x0184 4038	-	Reserved
0x0184 4040	L1DWBAR	L1D writeback base address register
0x0184 4044	L1DWWC	L1D writeback word count register
0x0184 4048	L1DIBAR	L1D invalidate base address register
0x0184 404C	L1DIWC	L1D invalidate word count register
0x0184 4050 - 0x0184 4FFF	-	Reserved
0x0184 5000	L2WB	L2 writeback all register
0x0184 5004	L2WBINV	L2 writeback invalidate all register
0x0184 5008	L2INV	L2 Global Invalidate without writeback
0x0184 500C - 0x0184 5027	-	Reserved
0x0184 5028	L1PINV	L1P Global Invalidate
0x0184 502C - 0x0184 5039	-	Reserved
0x0184 5040	L1DWB	L1D Global Writeback
0x0184 5044	L1DWBINV	L1D Global Writeback with Invalidate
0x0184 5048	L1DINV	L1D Global Invalidate without writeback
0x0184 8000 – 0x0184 80FF	MAR0 - MAR63	Reserved 0x0000 0000 – 0x3FFF FFFF
0x0184 8100 – 0x0184 817F	MAR64 – MAR95	Memory Attribute Registers for EMIFA SDRAM Data (CS0) 0x4000 0000 – 0x5FFF FFFF
0x0184 8180 – 0x0184 8187	MAR96 - MAR97	Memory Attribute Registers for EMIFA Async Data (CS2) 0x6000 0000 – 0x61FF FFFF
0x0184 8188 – 0x0184 818F	MAR98 – MAR99	Memory Attribute Registers for EMIFA Async Data (CS3) 0x6200 0000 – 0x63FF FFFF
0x0184 8190 – 0x0184 8197	MAR100 – MAR101	Memory Attribute Registers for EMIFA Async Data (CS4) 0x6400 0000 – 0x65FF FFFF
0x0184 8198 – 0x0184 819F	MAR102 – MAR103	Memory Attribute Registers for EMIFA Async Data (CS5) 0x6600 0000 – 0x67FF FFFF
0x0184 81A0 – 0x0184 81FF	MAR104 – MAR127	Reserved 0x6800 0000 – 0x7FFF FFFF
0x0184 8200	MAR128	Memory Attribute Register for Shared RAM 0x8000 0000 – 0x8001 FFFF
		Reserved 0x8002 0000 – 0x81FF FFFF
0x0184 8204 – 0x0184 82FF	MAR129 – MAR191	Reserved 0x8200 0000 – 0xBFFF FFFF
0x0184 8300 – 0x0184 837F	MAR192 – MAR223	Memory Attribute Registers for EMIFB SDRAM Data (CS0) 0xC000 0000 – 0xDFFF FFFF
0x0184 8380 – 0x0184 83FF	MAR224 – MAR255	Reserved 0xE000 0000 – 0xFFFF FFFF

Table 3-3. C674x L1/L2 Memory Protection Registers

BYTE ADDRESS	ACRONYM	REGISTER DESCRIPTION
0x0184 A000	L2MPFAR	L2 memory protection fault address register
0x0184 A004	L2MPFSR	L2 memory protection fault status register
0x0184 A008	L2MPFCR	L2 memory protection fault command register
0x0184 A00C - 0x0184 A0FF	-	Reserved
0x0184 A100	L2MPLK0	L2 memory protection lock key bits [31:0]
0x0184 A104	L2MPLK1	L2 memory protection lock key bits [63:32]
0x0184 A108	L2MPLK2	L2 memory protection lock key bits [95:64]
0x0184 A10C	L2MPLK3	L2 memory protection lock key bits [127:96]
0x0184 A110	L2MPLKCMD	L2 memory protection lock key command register
0x0184 A114	L2MPLKSTAT	L2 memory protection lock key status register
0x0184 A118 - 0x0184 A1FF	-	Reserved
0x0184 A200	L2MPPA0	L2 memory protection page attribute register 0 (controls memory address 0x0080 0000 - 0x0080 1FFF)

Copyright © 2008–2014, Texas Instruments Incorporated

Table 3-3. C674x L1/L2 Memory Protection Registers (continued)

BYTE ADDRESS	ACRONYM	REGISTER DESCRIPTION
0x0184 A204	L2MPPA1	L2 memory protection page attribute register 1 (controls memory address 0x0080 2000 - 0x0080 3FFF)
0x0184 A208	L2MPPA2	L2 memory protection page attribute register 2 (controls memory address 0x0080 4000 - 0x0080 5FFF)
0x0184 A20C	L2MPPA3	L2 memory protection page attribute register 3 (controls memory address 0x0080 6000 - 0x0080 7FFF)
0x0184 A210	L2MPPA4	L2 memory protection page attribute register 4 (controls memory address 0x0080 8000 - 0x0080 9FFF)
0x0184 A214	L2MPPA5	L2 memory protection page attribute register 5 (controls memory address 0x0080 A000 - 0x0080 BFFF)
0x0184 A218	L2MPPA6	L2 memory protection page attribute register 6 (controls memory address 0x0080 C000 - 0x0080 DFFF)
0x0184 A21C	L2MPPA7	L2 memory protection page attribute register 7 (controls memory address 0x0080 E000 - 0x0080 FFFF)
0x0184 A220	L2MPPA8	L2 memory protection page attribute register 8 (controls memory address 0x0081 0000 - 0x0081 1FFF)
0x0184 A224	L2MPPA9	L2 memory protection page attribute register 9 (controls memory address 0x0081 2000 - 0x0081 3FFF)
0x0184 A228	L2MPPA10	L2 memory protection page attribute register 10 (controls memory address 0x0081 4000 - 0x0081 5FFF)
0x0184 A22C	L2MPPA11	L2 memory protection page attribute register 11 (controls memory address 0x0081 6000 - 0x0081 7FFF)
0x0184 A230	L2MPPA12	L2 memory protection page attribute register 12 (controls memory address 0x0081 8000 - 0x0081 9FFF)
0x0184 A234	L2MPPA13	L2 memory protection page attribute register 13 (controls memory address 0x0081 A000 - 0x0081 BFFF)
0x0184 A238	L2MPPA14	L2 memory protection page attribute register 14 (controls memory address 0x0081 C000 - 0x0081 DFFF)
0x0184 A23C	L2MPPA15	L2 memory protection page attribute register 15 (controls memory address 0x0081 E000 - 0x0081 FFFF)
0x0184 A240	L2MPPA16	L2 memory protection page attribute register 16 (controls memory address 0x0082 0000 - 0x0082 1FFF)
0x0184 A244	L2MPPA17	L2 memory protection page attribute register 17 (controls memory address 0x0082 2000 - 0x0082 3FFF)
0x0184 A248	L2MPPA18	L2 memory protection page attribute register 18 (controls memory address 0x0082 4000 - 0x0082 5FFF)
0x0184 A24C	L2MPPA19	L2 memory protection page attribute register 19 (controls memory address 0x0082 6000 - 0x0082 7FFF)
0x0184 A250	L2MPPA20	L2 memory protection page attribute register 20 (controls memory address 0x0082 8000 - 0x0082 9FFF)
0x0184 A254	L2MPPA21	L2 memory protection page attribute register 21 (controls memory address 0x0082 A000 - 0x0082 BFFF)
0x0184 A258	L2MPPA22	L2 memory protection page attribute register 22 (controls memory address 0x0082 C000 - 0x0082 DFFF)
0x0184 A25C	L2MPPA23	L2 memory protection page attribute register 23 (controls memory address 0x0082 E000 - 0x0082 FFFF)
0x0184 A260	L2MPPA24	L2 memory protection page attribute register 24 (controls memory address 0x0083 0000 - 0x0083 1FFF)
0x0184 A264	L2MPPA25	L2 memory protection page attribute register 25 (controls memory address 0x0083 2000 - 0x0083 3FFF)
0x0184 A268	L2MPPA26	L2 memory protection page attribute register 26 (controls memory address 0x0083 4000 - 0x0083 5FFF)
0x0184 A26C	L2MPPA27	L2 memory protection page attribute register 27 (controls memory address 0x0083 6000 - 0x0083 7FFF)
0x0184 A270	L2MPPA28	L2 memory protection page attribute register 28 (controls memory address 0x0083 8000 - 0x0083 9FFF)

Copyright © 2008–2014, Texas Instruments Incorporated

Table 3-3. C674x L1/L2 Memory Protection Registers (continued)

BYTE ADDRESS	ACRONYM	REGISTER DESCRIPTION
0x0184 A274	L2MPPA29	L2 memory protection page attribute register 29 (controls memory address 0x0083 A000 - 0x0083 BFFF)
0x0184 A278	L2MPPA30	L2 memory protection page attribute register 30 (controls memory address 0x0083 C000 - 0x0083 DFFF)
0x0184 A27C	L2MPPA31	L2 memory protection page attribute register 31 (controls memory address 0x0083 E000 - 0x0083 FFFF)
0x0184 A280	L2MPPA32	L2 memory protection page attribute register 32 (controls memory address 0x0070 0000 - 0x0070 7FFF)
0x0184 A284	L2MPPA33	L2 memory protection page attribute register 33 (controls memory address 0x0070 8000 - 0x0070 FFFF)
0x0184 A288	L2MPPA34	L2 memory protection page attribute register 34 (controls memory address 0x0071 0000 - 0x0071 7FFF)
0x0184 A28C	L2MPPA35	L2 memory protection page attribute register 35 (controls memory address 0x0071 8000 - 0x0071 FFFF)
0x0184 A290	L2MPPA36	L2 memory protection page attribute register 36 (controls memory address 0x0072 0000 - 0x0072 7FFF)
0x0184 A294	L2MPPA37	L2 memory protection page attribute register 37 (controls memory address 0x0072 8000 - 0x0072 FFFF)
0x0184 A298	L2MPPA38	L2 memory protection page attribute register 38 (controls memory address 0x0073 0000 - 0x0073 7FFF)
0x0184 A29C	L2MPPA39	L2 memory protection page attribute register 39 (controls memory address 0x0073 8000 - 0x0073 FFFF)
0x0184 A2A0	L2MPPA40	L2 memory protection page attribute register 40 (controls memory address 0x0074 0000 - 0x0074 7FFF)
0x0184 A2A4	L2MPPA41	L2 memory protection page attribute register 41 (controls memory address 0x0074 8000 - 0x0074 FFFF)
0x0184 A2A8	L2MPPA42	L2 memory protection page attribute register 42 (controls memory address 0x0075 0000 - 0x0075 7FFF)
0x0184 A2AC	L2MPPA43	L2 memory protection page attribute register 43 (controls memory address 0x0075 8000 - 0x0075 FFFF)
0x0184 A2B0	L2MPPA44	L2 memory protection page attribute register 44 (controls memory address 0x0076 0000 - 0x0076 7FFF)
0x0184 A2B4	L2MPPA45	L2 memory protection page attribute register 45 (controls memory address 0x0076 8000 - 0x0076 FFFF)
0x0184 A2B8	L2MPPA46	L2 memory protection page attribute register 46 (controls memory address 0x0077 0000 - 0x0077 7FFF)
0x0184 A2BC	L2MPPA47	L2 memory protection page attribute register 47 (controls memory address 0x0077 8000 - 0x0077 FFFF)
0x0184 A2C0	L2MPPA48	L2 memory protection page attribute register 48 (controls memory address 0x0078 0000 - 0x0078 7FFF)
0x0184 A2C4	L2MPPA49	L2 memory protection page attribute register 49 (controls memory address 0x0078 8000 - 0x0078 FFFF)
0x0184 A2C8	L2MPPA50	L2 memory protection page attribute register 50 (controls memory address 0x0079 0000 - 0x0079 7FFF)
0x0184 A2CC	L2MPPA51	L2 memory protection page attribute register 51 (controls memory address 0x0079 8000 - 0x0079 FFFF)
0x0184 A2D0	L2MPPA52	L2 memory protection page attribute register 52 (controls memory address 0x007A 0000 - 0x007A 7FFF)
0x0184 A2D4	L2MPPA53	L2 memory protection page attribute register 53 (controls memory address 0x007A 8000 - 0x007A FFFF)
0x0184 A2D8	L2MPPA54	L2 memory protection page attribute register 54 (controls memory address 0x007B 0000 - 0x007B 7FFF)
0x0184 A2DC	L2MPPA55	L2 memory protection page attribute register 55 (controls memory address 0x007B 8000 - 0x007B FFFF)
0x0184 A2E0	L2MPPA56	L2 memory protection page attribute register 56 (controls memory address 0x007C 0000 - 0x007C 7FFF)

Copyright © 2008–2014, Texas Instruments Incorporated

Table 3-3. C674x L1/L2 Memory Protection Registers (continued)

BYTE ADDRESS	ACRONYM	REGISTER DESCRIPTION
0x0184 A2E4	L2MPPA57	L2 memory protection page attribute register 57 (controls memory address 0x007C 8000 - 0x007C FFFF)
0x0184 A2E8	L2MPPA58	L2 memory protection page attribute register 58 (controls memory address 0x007D 0000 - 0x007D 7FFF)
0x0184 A2EC	L2MPPA59	L2 memory protection page attribute register 59 (controls memory address 0x007D 8000 - 0x007D FFFF)
0x0184 A2F0	L2MPPA60	L2 memory protection page attribute register 60 (controls memory address 0x007E 0000 - 0x007E 7FFF)
0x0184 A2F4	L2MPPA61	L2 memory protection page attribute register 61 (controls memory address 0x007E 8000 - 0x007E FFFF)
0x0184 A2F8	L2MPPA62	L2 memory protection page attribute register 62 (controls memory address 0x007F 0000 - 0x007F 7FFF)
0x0184 A2FC	L2MPPA63	L2 memory protection page attribute register 63 (controls memory address 0x007F 8000 - 0x007F FFFF)
0x0184 A300 - 0x0184 A3FF	-	Reserved
0x0184 A400	L1PMPFAR	L1P memory protection fault address register
0x0184 A404	L1PMPFSR	L1P memory protection fault status register
0x0184 A408	L1PMPFCR	L1P memory protection fault command register
0x0184 A40C - 0x0184 A4FF	-	Reserved
0x0184 A500	L1PMPLK0	L1P memory protection lock key bits [31:0]
0x0184 A504	L1PMPLK1	L1P memory protection lock key bits [63:32]
0x0184 A508	L1PMPLK2	L1P memory protection lock key bits [95:64]
0x0184 A50C	L1PMPLK3	L1P memory protection lock key bits [127:96]
0x0184 A510	L1PMPLKCMD	L1P memory protection lock key command register
0x0184 A514	L1PMPLKSTAT	L1P memory protection lock key status register
0x0184 A518 - 0x0184 A5FF	-	Reserved
0x0184 A600 - 0x0184 A63F	-	Reserved (1)
0x0184 A640	L1PMPPA16	L1P memory protection page attribute register 16 (controls memory address 0x00E0 0000 - 0x00E0 07FF)
0x0184 A644	L1PMPPA17	L1P memory protection page attribute register 17 (controls memory address 0x00E0 0800 - 0x00E0 0FFF)
0x0184 A648	L1PMPPA18	L1P memory protection page attribute register 18 (controls memory address 0x00E0 1000 - 0x00E0 17FF)
0x0184 A64C	L1PMPPA19	L1P memory protection page attribute register 19 (controls memory address 0x00E0 1800 - 0x00E0 1FFF)
0x0184 A650	L1PMPPA20	L1P memory protection page attribute register 20 (controls memory address 0x00E0 2000 - 0x00E0 27FF)
0x0184 A654	L1PMPPA21	L1P memory protection page attribute register 21 (controls memory address 0x00E0 2800 - 0x00E0 2FFF)
0x0184 A658	L1PMPPA22	L1P memory protection page attribute register 22 (controls memory address 0x00E0 3000 - 0x00E0 37FF)
0x0184 A65C	L1PMPPA23	L1P memory protection page attribute register 23 (controls memory address 0x00E0 3800 - 0x00E0 3FFF)
0x0184 A660	L1PMPPA24	L1P memory protection page attribute register 24 (controls memory address 0x00E0 4000 - 0x00E0 47FF)
0x0184 A664	L1PMPPA25	L1P memory protection page attribute register 25 (controls memory address 0x00E0 4800 - 0x00E0 4FFF)
0x0184 A668	L1PMPPA26	L1P memory protection page attribute register 26 (controls memory address 0x00E0 5000 - 0x00E0 57FF)
0x0184 A66C	L1PMPPA27	L1P memory protection page attribute register 27 (controls memory address 0x00E0 5800 - 0x00E0 5FFF)

(1) These addresses correspond to the L1P memory protection page attribute registers 0-15 (L1PMPPA0-L1PMPPA15) of the C674x megamaodule. These registers are not supported for this device.

Copyright © 2008–2014, Texas Instruments Incorporated

Table 3-3. C674x L1/L2 Memory Protection Registers (continued)

BYTE ADDRESS	ACRONYM	REGISTER DESCRIPTION
0x0184 A670	L1PMPPA28	L1P memory protection page attribute register 28 (controls memory address 0x00E0 6000 - 0x00E0 67FF)
0x0184 A674	L1PMPPA29	L1P memory protection page attribute register 29 (controls memory address 0x00E0 6800 - 0x00E0 6FFF)
0x0184 A678	L1PMPPA30	L1P memory protection page attribute register 30 (controls memory address 0x00E0 7000 - 0x00E0 77FF)
0x0184 A67C	L1PMPPA31	L1P memory protection page attribute register 31 (controls memory address 0x00E0 7800 - 0x00E0 7FFF)
0x0184 A67F – 0x0184 ABFF	-	Reserved
0x0184 AC00	L1DMPFAR	L1D memory protection fault address register
0x0184 AC04	L1DMPFSR	L1D memory protection fault status register
0x0184 AC08	L1DMPFCR	L1D memory protection fault command register
0x0184 AC0C - 0x0184 ACFF	-	Reserved
0x0184 AD00	L1DMPLK0	L1D memory protection lock key bits [31:0]
0x0184 AD04	L1DMPLK1	L1D memory protection lock key bits [63:32]
0x0184 AD08	L1DMPLK2	L1D memory protection lock key bits [95:64]
0x0184 AD0C	L1DMPLK3	L1D memory protection lock key bits [127:96]
0x0184 AD10	L1DMPLKCMD	L1D memory protection lock key command register
0x0184 AD14	L1DMPLKSTAT	L1D memory protection lock key status register
0x0184 AD18 - 0x0184 ADFF	-	Reserved
0x0184 AE00 - 0x0184 AE3F	-	Reserved (2)
0x0184 AE40	L1DMPPA16	L1D memory protection page attribute register 16 (controls memory address 0x00F0 0000 - 0x00F0 07FF)
0x0184 AE44	L1DMPPA17	L1D memory protection page attribute register 17 (controls memory address 0x00F0 0800 - 0x00F0 0FFF)
0x0184 AE48	L1DMPPA18	L1D memory protection page attribute register 18 (controls memory address 0x00F0 1000 - 0x00F0 17FF)
0x0184 AE4C	L1DMPPA19	L1D memory protection page attribute register 19 (controls memory address 0x00F0 1800 - 0x00F0 1FFF)
0x0184 AE50	L1DMPPA20	L1D memory protection page attribute register 20 (controls memory address 0x00F0 2000 - 0x00F0 27FF)
0x0184 AE54	L1DMPPA21	L1D memory protection page attribute register 21 (controls memory address 0x00F0 2800 - 0x00F0 2FFF)
0x0184 AE58	L1DMPPA22	L1D memory protection page attribute register 22 (controls memory address 0x00F0 3000 - 0x00F0 37FF)
0x0184 AE5C	L1DMPPA23	L1D memory protection page attribute register 23 (controls memory address 0x00F0 3800 - 0x00F0 3FFF)
0x0184 AE60	L1DMPPA24	L1D memory protection page attribute register 24 (controls memory address 0x00F0 4000 - 0x00F0 47FF)
0x0184 AE64	L1DMPPA25	L1D memory protection page attribute register 25 (controls memory address 0x00F0 4800 - 0x00F0 4FFF)
0x0184 AE68	L1DMPPA26	L1D memory protection page attribute register 26 (controls memory address 0x00F0 5000 - 0x00F0 57FF)
0x0184 AE6C	L1DMPPA27	L1D memory protection page attribute register 27 (controls memory address 0x00F0 5800 - 0x00F0 5FFF)
0x0184 AE70	L1DMPPA28	L1D memory protection page attribute register 28 (controls memory address 0x00F0 6000 - 0x00F0 67FF)
0x0184 AE74	L1DMPPA29	L1D memory protection page attribute register 29 (controls memory address 0x00F0 6800 - 0x00F0 6FFF)
0x0184 AE78	L1DMPPA30	L1D memory protection page attribute register 30 (controls memory address 0x00F0 7000 - 0x00F0 77FF)

(2) These addresses correspond to the L1D memory protection page attribute registers 0-15 (L1DMPPA0-L1DMPPA15) of the C674x megamaodule. These registers are not supported for this device.

Copyright © 2008–2014, Texas Instruments Incorporated

Table 3-3. C674x L1/L2 Memory Protection Registers (continued)

BYTE ADDRESS	ACRONYM	REGISTER DESCRIPTION
0x0184 AE7C	L1DMPPA31	L1D memory protection page attribute register 31 (controls memory address 0x00F0 7800 - 0x00F0 7FFF)
0x0184 AE80 – 0x0185 FFFF	-	Reserved

See Table 3-4 for a detailed top level C6745/6747 memory map that includes the DSP memory space.

Copyright © 2008–2014, Texas Instruments Incorporated

3.4 Memory Map Summary

Note: Read/Write accesses to illegal or reserved addresses in the memory map may cause undefined behavior.

Table 3-4. C6747 Top Level Memory Map

Start Address	End Address	Size	DSP Mem Map	EDMA Mem Map	PRUSS Mem Map	Master Peripheral Mem Map	LCDC Mem Map
0x0000 0000	0x0000 0FFF	4K	-		PRUSS Local Address Space		
0x0000 1000	0x006F FFFF						
0x0070 0000	0x007F FFFF	1024K	DSP L2 ROM (1)	-			
0x0080 0000	0x0083 FFFF	256K	DSP L2 RAM	-			
0x0084 0000	0x00DF FFFF		-				
0x00E0 0000	0x00E0 7FFF	32K	DSP L1P RAM	-			
0x00E0 8000	0x00EF FFFF						
0x00F0 0000	0x00F0 7FFF	32K	DSP L1D RAM	-			
0x00F0 8000	0x017F FFFF						
0x0180 0000	0x0180 FFFF	64K	DSP Interrupt Controller	-			
0x0181 0000	0x0181 0FFF	4K	DSP Powerdown Controller	-			
0x0181 1000	0x0181 1FFF	4K	DSP Security ID	-			
0x0181 2000	0x0181 2FFF	4K	DSP Revision ID	-			
0x0181 3000	0x0181 FFFF	52K	-	-			
0x0182 0000	0x0182 FFFF	64K	DSP EMC	-			
0x0183 0000	0x0183 FFFF	64K	DSP Internal Reserved	-			
0x0184 0000	0x0184 FFFF	64K	DSP Memory System	-			
0x0185 0000	0x01BF FFFF						
0x01C0 0000	0x01C0 7FFF	32K	EDMA3 Channel Controller				-
0x01C0 8000	0x01C0 83FF	1024	EDMA3 Transfer Controller 0				-
0x01C0 8400	0x01C0 87FF	1024	EDMA3 Transfer Controller 1				-
0x01C0 8800	0x01C0 FFFF						
0x01C1 0000	0x01C1 0FFF	4K	PSC 0				-
0x01C1 1000	0x01C1 1FFF	4K	PLL Controller				-
0x01C1 2000	0x01C1 3FFF						
0x01C1 4000	0x01C1 4FFF	4K	SYSCFG				-
0x01C1 5000	0x01C1 FFFF		-				
0x01C2 0000	0x01C2 0FFF	4K	Timer64P 0				-
0x01C2 1000	0x01C2 1FFF	4K	Timer64P 1				-
0x01C2 2000	0x01C2 2FFF	4K	I2C 0				-
0x01C2 3000	0x01C2 3FFF	4K	RTC				-
0x01C2 4000	0x01C3 FFFF		-				
0x01C4 0000	0x01C4 0FFF	4K	MMC/SD 0				-
0x01C4 1000	0x01C4 1FFF	4K	SPI 0				-
0x01C4 2000	0x01C4 2FFF	4K	UART 0				-
0x01C4 3000	0x01CF FFFF		-				
0x01D0 0000	0x01D0 0FFF	4K	McASP 0 Control				-
0x01D0 1000	0x01D0 1FFF	4K	McASP 0 AFIFO Control				-

(1) The DSP L2 ROM is used for boot purposes and cannot be programmed with application code

Copyright © 2008–2014, Texas Instruments Incorporated

Table 3-4. C6747 Top Level Memory Map (continued)

Start Address	End Address	Size	DSP Mem Map	EDMA Mem Map	PRUSS Mem Map	Master Peripheral Mem Map	LCDC Mem Map
0x01D0 2000	0x01D0 2FFF	4K	McASP 0 Data				-
0x01D0 3000	0x01D0 3FFF		-				
0x01D0 4000	0x01D0 4FFF	4K	McASP 1 Control				-
0x01D0 5000	0x01D0 5FFF	4K	McASP 1 AFIFO Control				-
0x01D0 6000	0x01D0 6FFF	4K	McASP 1 Data				-
0x01D0 7000	0x01D0 7FFF		-				
0x01D0 8000	0x01D0 8FFF	4K	McASP 2 Control				-
0x01D0 9000	0x01D0 9FFF	4K	McASP 2 AFIFO Control				-
0x01D0 A000	0x01D0 AFFF	4K	McASP 2 Data				-
0x01D0 B000	0x01D0 BFFF		-				
0x01D0 C000	0x01D0 CFFF	4K	UART 1				-
0x01D0 D000	0x01D0 DFFF	4K	UART 2				-
0x01D0 E000	0x01DF FFFF		-				
0x01E0 0000	0x01E0 FFFF	64K	USB0				-
0x01E1 0000	0x01E1 0FFF	4K	UHPI				-
0x01E1 1000	0x01E1 1FFF		-				
0x01E1 2000	0x01E1 2FFF	4K	SPI 1				-
0x01E1 3000	0x01E1 3FFF	4K	LCD Controller				-
0x01E1 4000	0x01E1 4FFF	4K	Memory Protection Unit 1 (MPU 1)				-
0x01E1 5000	0x01E1 5FFF	4K	Memory Protection Unit 2 (MPU 2)				-
0x01E1 6000	0x01E1 FFFF		-				
0x01E2 0000	0x01E2 1FFF	8K	EMAC Control Module RAM				-
0x01E2 2000	0x01E2 2FFF	4K	EMAC Control Module Registers				-
0x01E2 3000	0x01E2 3FFF	4K	EMAC Control Registers				-
0x01E2 4000	0x01E2 4FFF	4K	EMAC MDIO port				-
0x01E2 5000	0x01E2 5FFF	4K	USB1				-
0x01E2 6000	0x01E2 6FFF	4K	GPIO				-
0x01E2 7000	0x01E2 7FFF	4K	PSC 1				-
0x01E2 8000	0x01E2 8FFF	4K	I2C 1				-
0x01E2 9000	0x01EF FFFF		-				
0x01F0 0000	0x01F0 0FFF	4K	eHRPWM 0				-
0x01F0 1000	0x01F0 1FFF	4K	HRPWM 0				-
0x01F0 2000	0x01F0 2FFF	4K	eHRPWM 1				-
0x01F0 3000	0x01F0 3FFF	4K	HRPWM 1				-
0x01F0 4000	0x01F0 4FFF	4K	eHRPWM 2				-
0x01F0 5000	0x01F0 5FFF	4K	HRPWM 2				-
0x01F0 6000	0x01F0 6FFF	4K	ECAP 0				-
0x01F0 7000	0x01F0 7FFF	4K	ECAP 1				-
0x01F0 8000	0x01F0 8FFF	4K	ECAP 2				-
0x01F0 9000	0x01F0 9FFF	4K	EQEP 0				-
0x01F0 A000	0x01F0 AFFF	4K	EQEP 1				-
0x01F0 B000	0x116F FFFF		-				
0x1170 0000	0x117F FFFF	1024K	DSP L2 ROM (1)				-
0x1180 0000	0x1183 FFFF	256K	DSP L2 RAM				-
0x1184 0000	0x11DF FFFF		-				
0x11E0 0000	0x11E0 7FFF	32K	DSP L1P RAM				-

Copyright © 2008–2014, Texas Instruments Incorporated

Table 3-4. C6747 Top Level Memory Map (continued)

Start Address	End Address	Size	DSP Mem Map	EDMA Mem Map	PRUSS Mem Map	Master Peripheral Mem Map	LCDC Mem Map
0x11E0 8000	0x11EF FFFF		-				
0x11F0 0000	0x11F0 7FFF	32K	DSP L1D RAM				-
0x11F0 8000	0x3FFF FFFF		-				
0x4000 0000	0x47FF FFFF	128M	EMIFA SDRAM data (CS0)				-
0x4800 0000	0x5FFF FFFF						
0x6000 0000	0x61FF FFFF	32M	EMIFA async data (CS2)				-
0x6200 0000	0x63FF FFFF	32M	EMIFA async data (CS3)				-
0x6400 0000	0x65FF FFFF	32M	EMIFA async data (CS4)				-
0x6600 0000	0x67FF FFFF	32M	EMIFA async data (CS5)				-
0x6800 0000	0x6800 7FFF	32K	EMIFA Control Registers				-
0x6800 8000	0x7FFF FFFF		-				
0x8000 0000	0x8001 FFFF	128K	Shared RAM				-
0x8002 0000	0xAFFF FFFF		-				
0xB000 0000	0xB000 7FFF	32K	EMIFB Control Registers				
0xB000 8000	0xBFFF FFFF		-				
0xC000 0000	0xCFFF FFFF	256M	EMIFB SDRAM Data				
0xD000 0000	0xDFFF FFFF		-				

Table 3-5. C6745 Top Level Memory Map

Start Address	End Address	Size	DSP Mem Map	EDMA Mem Map	PRUSS Mem Map	Master Peripheral Mem Map	LCDC Mem Map
0x0000 0000	0x0000 0FFF	4K	-		PRUSS Local Address Space		
0x0000 1000	0x006F FFFF						
0x0070 0000	0x007F FFFF	1024K	DSP L2 ROM (1)	-			
0x0080 0000	0x0083 FFFF	256K	DSP L2 RAM	-			
0x0084 0000	0x00DF FFFF		-				
0x00E0 0000	0x00E0 7FFF	32K	DSP L1P RAM	-			
0x00E0 8000	0x00EF FFFF						
0x00F0 0000	0x00F0 7FFF	32K	DSP L1D RAM	-			
0x00F0 8000	0x017F FFFF						
0x0180 0000	0x0180 FFFF	64K	DSP Interrupt Controller	-			
0x0181 0000	0x0181 0FFF	4K	DSP Powerdown Controller	-			
0x0181 1000	0x0181 1FFF	4K	DSP Security ID	-			
0x0181 2000	0x0181 2FFF	4K	DSP Revision ID	-			
0x0181 3000	0x0181 FFFF	52K	-	-			
0x0182 0000	0x0182 FFFF	64K	DSP EMC	-			
0x0183 0000	0x0183 FFFF	64K	DSP Internal Reserved	-			
0x0184 0000	0x0184 FFFF	64K	DSP Memory System	-			
0x0185 0000	0x01BF FFFF						
0x01C0 0000	0x01C0 7FFF	32K	EDMA3 Channel Controller				-
0x01C0 8000	0x01C0 83FF	1024	EDMA3 Transfer Controller 0				-

(1) The DSP L2 ROM is used for boot purposes and cannot be programmed with application code

Copyright © 2008–2014, Texas Instruments Incorporated

Table 3-5. C6745 Top Level Memory Map (continued)

Start Address	End Address	Size	DSP Mem Map	EDMA Mem Map	PRUSS Mem Map	Master Peripheral Mem Map	LCDC Mem Map
0x01C0 8400	0x01C0 87FF	1024	EDMA3 Transfer Controller 1				-
0x01C0 8800	0x01C0 FFFF						
0x01C1 0000	0x01C1 0FFF	4K	PSC 0				-
0x01C1 1000	0x01C1 1FFF	4K	PLL Controller				-
0x01C1 2000	0x01C1 3FFF						
0x01C1 4000	0x01C1 4FFF	4K	SYSCFG				-
0x01C1 5000	0x01C1 FFFF		-				
0x01C2 0000	0x01C2 0FFF	4K	Timer64P 0				-
0x01C2 1000	0x01C2 1FFF	4K	Timer64P 1				-
0x01C2 2000	0x01C2 2FFF	4K	I2C 0				-
0x01C2 3000	0x01C3 FFFF		-				
0x01C4 0000	0x01C4 0FFF	4K	MMC/SD 0				-
0x01C4 1000	0x01C4 1FFF	4K	SPI 0				-
0x01C4 2000	0x01C4 2FFF	4K	UART 0				-
0x01C4 3000	0x01CF FFFF		-				
0x01D0 0000	0x01D0 0FFF	4K	McASP 0 Control				-
0x01D0 1000	0x01D0 1FFF	4K	McASP 0 AFIFO Control				-
0x01D0 2000	0x01D0 2FFF	4K	McASP 0 Data				-
0x01D0 3000	0x01D0 3FFF		-				
0x01D0 4000	0x01D0 4FFF	4K	McASP 1 Control				-
0x01D0 5000	0x01D0 5FFF	4K	McASP 1 AFIFO Control				-
0x01D0 6000	0x01D0 6FFF	4K	McASP 1 Data				-
0x01D0 7000	0x01D0 BFFF		-				
0x01D0 C000	0x01D0 CFFF	4K	UART 1				-
0x01D0 D000	0x01D0 DFFF	4K	UART 2				-
0x01D0 E000	0x01DF FFFF		-				
0x01E0 0000	0x01E0 FFFF	64K	USB0				-
0x01E1 0000	0x01E1 1FFF		-				
0x01E1 2000	0x01E1 2FFF	4K	SPI 1				-
0x01E1 3000	0x01E1 4FFF	4K	Memory Protection Unit 1 (MPU 1)				-
0x01E1 5000	0x01E1 5FFF	4K	Memory Protection Unit 2 (MPU 2)				-
0x01E1 6000	0x01E1 FFFF		-				
0x01E2 0000	0x01E2 1FFF	8K	EMAC Control Module RAM				-
0x01E2 2000	0x01E2 2FFF	4K	EMAC Control Module Registers				-
0x01E2 3000	0x01E2 3FFF	4K	EMAC Control Registers				-
0x01E2 4000	0x01E2 4FFF	4K	EMAC MDIO port				-
0x01E2 5000	0x01E2 6FFF	4K	GPIO				-
0x01E2 7000	0x01E2 7FFF	4K	PSC 1				-
0x01E2 8000	0x01E2 8FFF	4K	I2C 1				-
0x01E2 9000	0x01EF FFFF		-				
0x01F0 0000	0x01F0 0FFF	4K	eHRPWM 0				-
0x01F0 1000	0x01F0 1FFF	4K	HRPWM 0				-
0x01F0 2000	0x01F0 2FFF	4K	eHRPWM 1				-
0x01F0 3000	0x01F0 3FFF	4K	HRPWM 1				-
0x01F0 4000	0x01F0 4FFF	4K	eHRPWM 2				-
0x01F0 5000	0x01F0 5FFF	4K	HRPWM 2				-

Copyright © 2008–2014, Texas Instruments Incorporated

Table 3-5. C6745 Top Level Memory Map (continued)

Start Address	End Address	Size	DSP Mem Map	EDMA Mem Map	PRUSS Mem Map	Master Peripheral Mem Map	LCDC Mem Map
0x01F0 6000	0x01F0 6FFF	4K	ECAP 0				-
0x01F0 7000	0x01F0 7FFF	4K	ECAP 1				-
0x01F0 8000	0x01F0 8FFF	4K	ECAP 2				-
0x01F0 9000	0x01F0 9FFF	4K	EQEP 0				-
0x01F0 A000	0x01F0 AFFF	4K	EQEP 1				-
0x01F0 B000	0x116F FFFF		-				
0x1170 0000	0x117F FFFF	1024K	DSP L2 ROM (1)				-
0x1180 0000	0x1183 FFFF	256K	DSP L2 RAM				-
0x1184 0000	0x11DF FFFF		-				
0x11E0 0000	0x11E0 7FFF	32K	DSP L1P RAM				-
0x11E0 8000	0x11EF FFFF		-				
0x11F0 0000	0x11F0 7FFF	32K	DSP L1D RAM				-
0x11F0 8000	0x3FFF FFFF		-				
0x4000 0000	0x5FFF FFFF						
0x6000 0000	0x61FF FFFF	32M	EMIFA async data (CS2)				-
0x6200 0000	0x63FF FFFF	32M	EMIFA async data (CS3)				-
0x6400 0000	0x65FF FFFF	32M	EMIFA async data (CS4)				-
0x6600 0000	0x67FF FFFF	32M	EMIFA async data (CS5)				-
0x6800 0000	0x6800 7FFF	32K	EMIFA Control Registers				-
0x6800 8000	0xAFFF FFFF		-				
0xB000 0000	0xB000 7FFF	32K	EMIFB Control Registers				
0xB000 8000	0xBFFF FFFF		-				
0xC000 0000	0xC7FF FFFF	128M	EMIFB SDRAM Data				
0xC800 0000	0xDFFF FFFF		-				

Copyright © 2008–2014, Texas Instruments Incorporated

3.5 Pin Assignments

Extensive use of pin multiplexing is used to accommodate the largest number of peripheral functions in the smallest possible package. Pin multiplexing is controlled using a combination of hardware configuration at device reset and software programmable register settings.

3.5.1 Pin Map (Bottom View)

Figure 3-3 and Figure 3-4 show the pin assignments for ZKB package and PTP package, respectively.

	1	2	3	4	5	6	7	8	9	10	11	12	13	14	15	16	
T	V_{SS}	V_{SS}	AXR1[0]/ GP4[0]	AXR1[11]/ GP5[11]	SPI0_CLK/ EQEP1I/ GP5[2]/ BOOT[2]	SPI1_CLK/ EQEP1S/ GP5[7]/ BOOT[7]	EMA_CS[3]/ AMUTE2/ GP2[6]	EMA_CS[0]/ UHPI_HAS/ GP2[4]	EMA_A[0]/ LCD_D[7]/ GP1[0]	EMA_A[4]/ LCD_D[3]/ GP1[4]	EMA_A[8]/ LCD_PCLK/ GP1[8]	EMA_SDCKE/ GP2[0]	EMA_D[0]/ MMCSD_DAT[0]/ UHPI_HD[0]/ GP0[0]/ BOOT[12]	EMA_D[9]/ UHPI_HD[9]/ LCD_D[9]/ GP0[9]	V_{SS}	V_{SS}	T
R	DV_{DD}	AXR1[1]/ GP4[1]	UART0_RXD/ I2C0_SDA/ TM64P0_IN12/ GP5[8]/ BOOT[8]	SPI1_ENA/ UART2_RXD/ GP5[12]	SPI0_ENA/ UART0_CTS/ EQEP0A/ GP5[3]/ BOOT[3]	SPI0_SOMI[0]/ EQEP0I/ GP5[0]/ BOOT[0]	EMA_OE/ UHPI_HDS1/ AXR0[13]/ GP2[7]	EMA_BA[0]/ LCD_D[4]/ GP1[14]	EMA_A[1]/ MMCSD_CLK/ UHPI_HCNTL0/ GP1[1]	EMA_A[5]/ LCD_D[2]/ GP1[5]	EMA_A[9]/ LCD_HSYNC/ GP1[9]	EMA_CLK/ OBSCLK/ AHCLKR2/ GP1[15]	EMA_D[2]/ MMCSD_DAT[2]/ UHPI_HD[2]/ GP0[2]	EMA_D[10]/ UHPI_HD[10]/ LCD_D[10]/ GP0[10]	EMA_D[1]/ MMCSD_DAT[1]/ UHPI_HD[1]/ GP0[1]	DV_{DD}	R
P	AXR1[3]/ EQEP1A/ GP4[3]	AXR1[2]/ GP4[2]	UART0_TXD/ I2C0_SCL/ TM64P0_OUT12/ GP5[9]/ BOOT[9]	SPI1_SCS[0]/ UART2_TXD/ GP5[13]	SPI1_SOMI[0]/ I2C1_SCL/ GP5[5]/ BOOT[5]	SPI0_SIMO[0]/ EQEP0S/ GP5[1]/ BOOT[1]	EMA_CS[2]/ UHPI_HCS/ GP2[5]/ BOOT[15]	EMA_BA[1]/ LCD_D[5]/ UHPI_HHWIL/ GP1[13]	EMA_A[2]/ MMCSD_CMD/ UHPI_HCNTL1/ GP1[2]	EMA_A[6]/ LCD_D[1]/ GP1[6]	EMA_A[11]/ LCD_AC_ ENB_CS/ GP1[11]	EMA_WE_ DQM[1]/ UHPI_HDS2/ AXR0[14]/ GP2[8]	EMA_D[4]/ MMCSD_DAT[4]/ UHPI_HD[4]/ GP0[4]	EMA_D[12]/ UHPI_HD[12]/ LCD_D[12]/ GP0[12]	EMA_D[3]/ MMCSD_DAT[3]/ UHPI_HD[3]/ GP0[3]	EMA_D[11]/ UHPI_HD[11]/ LCD_D[11]/ GP0[11]	P
N	AXR1[5]/ EPWM2B/ GP4[5]	AXR1[4]/ EQEP1B/ GP4[4]	AXR1[10]/ GP5[10]	SPI0_SCS[0]/ UART0_RTS/ EQEP0B/ GP5[4]/ BOOT[4]	SPI1_SIMO[0]/ I2C1_SDA/ GP5[6]/ BOOT[6]	EMA_WAIT[0]/ UHPI_HRDY/ GP2[10]	EMA_RAS/ EMA_CS[5]/ GP2[2]	EMA_A[10]/ LCD_VSYNC/ GP1[10]	EMA_A[3]/ LCD_D[6]/ GP1[3]	EMA_A[7]/ LCD_D[0]/ GP1[7]	EMA_A[12]/ LCD_MCLK/ GP1[12]	EMA_D[8]/ UHPI_HD[8]/ LCD_D[8]/ GP0[8]	EMA_D[6]/ MMCSD_DAT[6]/ UHPI_HD[6]/ GP0[6]	EMA_D[14]/ UHPI_HD[14]/ LCD_D[14]/ GP0[14]	EMA_D[5]/ MMCSD_DAT[5]/ UHPI_HD[5]/ GP0[5]	EMA_D[13]/ UHPI_HD[13]/ LCD_D[13]/ GP0[13]	N
M	AXR1[9]/ GP4[9]	AXR1[8]/ EPWM1A/ GP4[8]	AXR1[7]/ EPWM1B/ GP4[7]	AXR1[6]/ EPWM2A/ GP4[6]	DV_{DD}	V_{SS}	V_{SS}	DV_{DD}	DV_{DD}	V_{SS}	V_{SS}	DV_{DD}	EMA_WE/ UHPI_HRW/ AXR0[12]/ GP2[3]/ BOOT[14]	EMA_WE_ DQM[0]/ UHPI_HINT/ AXR0[15]/ GP2[9]	EMA_D[7]/ MMCSD_DAT[7]/ UHPI_HD[7]/ GP0[7]/ BOOT[13]	EMA_D[15]/ UHPI_HD[15]/ LCD_D[15]/ GP0[15]	M
L	AHCLKR1/ GP4[11]	ACLKR1/ ECAP2/ APWM2/ GP4[12]	AFSR1/ GP4[13]	AMUTE0/ RESETOUT	DV_{DD}	CV_{DD}	V_{SS}	V_{SS}	V_{SS}	V_{SS}	DV_{DD}	DV_{DD}	EMB_CAS	EMB_D[22]	EMB_D[23]	EMA_CAS/ EMA_CS[4]/ GP2[1]	L
K	GP7[14]	AHCLKX1/ EPWM0B/ GP3[14]	ACLKX1/ EPWM0A/ GP3[15]	AFSX1/ EPWMSYNCI/ EPWMSYNCO/ GP4[10]	DV_{DD}	CV_{DD}	CV_{DD}	V_{SS}	V_{SS}	CV_{DD}	CV_{DD}	DV_{DD}	EMB_D[20]	EMB_WE_ DQM[0]/ GP5[15]	EMB_WE	EMB_D[21]	K
J	TMS	TDI	TDO	TRST	EMU[0]/ GP7[15]	CV_{DD}	CV_{DD}	V_{SS}	V_{SS}	CV_{DD}	CV_{DD}	CV_{DD}	EMB_D[5]/ GP6[5]	EMB_D[19]	EMB_D[6]/ GP6[6]	EMB_D[7]/ GP6[7]	J
H	RTC_XI	RTC_XO	TCK	NC	USB0_ VDDA33	RV_{DD}	CV_{DD}	V_{SS}	V_{SS}	CV_{DD}	CV_{DD}	RV_{DD}	EMB_D[3]/ GP6[3]	EMB_D[17]	EMB_D[18]	EMB_D[4]/ GP6[4]	H
G	RTC_CV_{DD}	RTC_V_{SS}	RESET	USB0_DM	DV_{DD}	CV_{DD}	CV_{DD}	V_{SS}	V_{SS}	CV_{DD}	CV_{DD}	DV_{DD}	EMB_D[1]/ GP6[1]	EMB_D[31]	EMB_D[16]	EMB_D[2]/ GP6[2]	G
F	OSCOUT	OSCIN	NC	USB0_DP	DV_{DD}	CV_{DD}	RSV1	V_{SS}	V_{SS}	V_{SS}	DV_{DD}	DV_{DD}	EMB_D[15]/ GP6[15]	EMB_D[29]	EMB_D[30]	EMB_D[0]/ GP6[0]	F
E	PLL0_VSSA	OSCVSS	USB0_ VDDA18	USB0_ DRVVBUS/ GP4[15]	DV_{DD}	V_{SS}	V_{SS}	DV_{DD}	DV_{DD}	V_{SS}	V_{SS}	DV_{DD}	EMB_D[13]/ GP6[13]	EMB_D[27]	EMB_D[28]	EMB_D[14]/ GP6[14]	E
D	PLL0_VDDA	USB0_ID	USB0_VBUS	AMUTE1/ EPWMTZ/ GP4[14]	AFSX0/ GP2[13]/ BOOT[10]	UART1_TXD/ AXR0[10]/ GP3[10]	AXR0[6]/ RMII_RXER/ ACLKR2/ GP3[6]	AXR0[2]/ RMII_TXEN/ AXR2[3]/ GP3[2]	EMB_CS[0]	EMB_A[0]/ GP7[2]	EMB_A[4]/ GP7[6]	EMB_A[8]/ GP7[10]	EMB_D[9]/ GP6[9]	EMB_D[10]/ GP6[10]	EMB_D[11]/ GP6[11]	EMB_D[12]/ GP6[12]	D
C	USB1_ VDDA33	USB1_ VDDA18	USB0_ VDDA12	AFSR0/ GP3[12]	ACLKX0/ ECAP0/ APWM0/ GP2[12]	UART1_RXD/ AXR0[9]/ GP3[9]	AXR0[5]/ RMII_RXD[1]/ AFSX2/ GP3[5]	AXR0[1]/ RMII_TXD[1]/ ACLKX2/ GP3[1]	EMB_BA[0]/ GP7[1]	EMB_A[1]/ GP7[3]	EMB_A[5]/ GP7[7]	EMB_A[9]/ GP7[11]	EMB_SDCKE	EMB_CLK	EMB_WE_ DQM[1]/ GP5[14]	EMB_D[8]/ GP6[8]	C
B	RSV2	V_{SS}	USB1_DM	ACLKR0/ ECAP1/ APWM1/ GP2[15]	AHCLKX0/ AHCLKX2/ USB_ REFCLKIN/ GP2[11]	AXR0[8]/ MDIO_D/ GP3[8]	AXR0[4]/ RMII_RXD[0]/ AXR2[1]/ GP3[4]	AXR0[0]/ RMII_TXD[0]/ AFSR2/ GP3[0]	EMB_BA[1]/ GP7[0]	EMB_A[2]/ GP7[4]	EMB_A[6]/ GP7[8]	EMB_A[11]/ GP7[13]	EMB_WE_ DQM[2]	EMB_D[25]	EMB_A[12]/ GP3[13]	DV_{DD}	B
A	V_{SS}	V_{SS}	USB1_DP	AHCLKR0/ RMII_MHZ_ 50_CLK/ GP2[14]/ BOOT[11]	AXR0[11]/ AXR2[0]/ GP3[11]	AXR0[7]/ MDIO_CLK/ GP3[7]	AXR0[3]/ RMII_CRS_DV/ AXR2[2]/ GP3[3]	EMB_RAS	EMB_A[10]/ GP7[12]	EMB_A[3]/ GP7[5]	EMB_A[7]/ GP7[9]	EMB_WE_ DQM[3]	EMB_D[24]	EMB_D[26]	V_{SS}	V_{SS}	A
	1	2	3	4	5	6	7	8	9	10	11	12	13	14	15	16	

Figure 3-3. Pin Map (ZKB)

Copyright © 2008–2014, Texas Instruments Incorporated

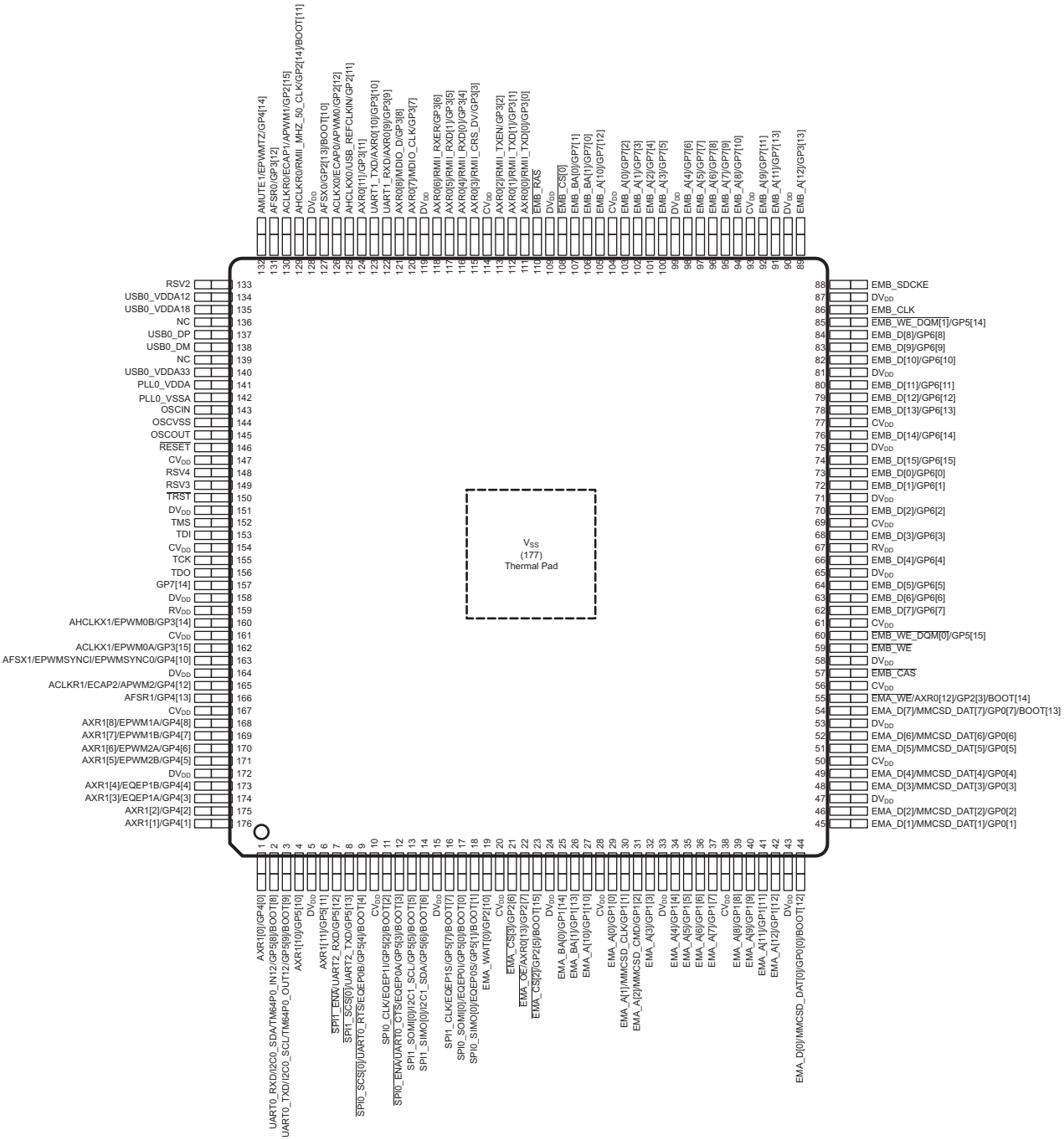

Figure 3-4. Pin Map (PTP)

3.6 Terminal Functions

to identify the external signal names, the associated pin/ball numbers along with the mechanical package designator, the pin type (I, O, IO, OZ, or PWR), whether the pin/ball has any internal pullup/pulldown resistors, whether the pin/ball is configurable as an IO in GPIO mode, and a functional pin description.

3.6.1 Device Reset and JTAG

Table 3-6. Reset and JTAG Terminal Functions

SIGNAL NAME	PIN NO		TYPE(1)	PULL(2)	DESCRIPTION
	PTP	ZKB			
RESET					
$\overline{\text{RESET}}$	146	G3	I		Device reset input
AMUTE0/ **$\overline{\text{RESETOUT}}$**	-	L4	O(3)	IPD	Reset output
JTAG					
TMS	152	J1	I	IPU	JTAG test mode select
TDI	153	J2	I	IPU	JTAG test data input
TDO	156	J3	O	IPD	JTAG test data output
TCK	155	H3	I	IPU	JTAG test clock
$\overline{\text{TRST}}$	150	J4	I	IPD	JTAG test reset
EMU[0]/GP7[15]	-	J5	I/O	IPU	Emulation Signal

(1) I = Input, O = Output, I/O = Bidirectional, Z = High impedance, PWR = Supply voltage, GND = Ground, A = Analog signal.
Note: For multiplexed pins where functions have different types (ie., input versus output), the table reflects the pin function direction for that particular peripheral.
(2) IPD = Internal Pulldown resistor, IPU = Internal Pullup resistor
(3) Open drain mode for $\overline{\text{RESETOUT}}$ function.

3.6.2 High-Frequency Oscillator and PLL

Table 3-7. High-Frequency Oscillator and PLL Terminal Functions

SIGNAL NAME	PIN NO		TYPE(1)	PULL(2)	DESCRIPTION
	PTP	ZKB			
EMA_CLK/**OBSCLK**/AHCLKR 2/GP1[15]	-	R12	O	IPU	PLL Observation Clock
1.2-V OSCILLATOR					
OSCIN	143	F2	I		Oscillator input
OSCOUT	145	F1	O		Oscillator output
OSCVSS	144	E2	GND		Oscillator ground (for filter only)
1.2-V PLL					
PLL0_VDDA	141	D1	PWR		PLL analog V_{DD} (1.2-V filtered supply)
PLL0_VSSA	142	E1	GND		PLL analog V_{SS} (for filter)

(1) I = Input, O = Output, I/O = Bidirectional, Z = High impedance, PWR = Supply voltage, GND = Ground, A = Analog signal.
Note: For multiplexed pins where functions have different types (ie., input versus output), the table reflects the pin function direction for that particular peripheral.
(2) IPD = Internal Pulldown resistor, IPU = Internal Pullup resistor

Copyright © 2008–2014, Texas Instruments Incorporated

3.6.3 Real-Time Clock and 32-kHz Oscillator

Table 3-8. Real-Time Clock (RTC) and 1.2-V, 32-kHz Oscillator Terminal Functions

SIGNAL NAME	PIN NO		TYPE(1)	PULL(2)	DESCRIPTION
	PTP	ZKB			
RTC_CVDD	-	G1	PWR		RTC module core power (isolated from rest of chip CV_{DD})
RTC_XI	-	H1	I		Low-frequency (32-kHz) oscillator receiver for real-time clock
RTC_XO	-	H2	O		Low-frequency (32-kHz) oscillator driver for real-time clock
RTC_V_{ss}	-	G2	GND		Oscillator ground (for filter)

(1) I = Input, O = Output, I/O = Bidirectional, Z = High impedance, PWR = Supply voltage, GND = Ground, A = Analog signal.
Note: For multiplexed pins where functions have different types (ie., input versus output), the table reflects the pin function direction for that particular peripheral.
(2) IPD = Internal Pulldown resistor, IPU = Internal Pullup resistor

3.6.4 External Memory Interface A (ASYNC, SDRAM)

Table 3-9. External Memory Interface A (EMIFA) Terminal Functions

SIGNAL NAME	PIN NO		TYPE(1)	PULL(2)	MUXED	DESCRIPTION
	PTP	ZKB				
EMA_D[15]/UHPI_HD[15]/LCD_D[15]/GP0[15]	-	M16	I/O	IPD	UHPI, LCD, GPIO	EMIFA data bus
EMA_D[14]/UHPI_HD[14]/LCD_D[14]/GP0[14]	-	N14	I/O	IPD		
EMA_D[13]/UHPI_HD[13]/LCD_D[13]/GP0[13]	-	N16	I/O	IPD		
EMA_D[12]/UHPI_HD[12]/LCD_D[12]/GP0[12]	-	P14	I/O	IPD		
EMA_D[11]/UHPI_HD[11]/LCD_D[11]/GP0[11]	-	P16	I/O	IPD		
EMA_D[10]/UHPI_HD[10]/LCD_D[10]/GP0[10]	-	R14	I/O	IPD		
EMA_D[9]/UHPI_HD[9]/LCD_D[9]/GP0[9]	-	T14	I/O	IPD		
EMA_D[8]/UHPI_HD[8]/LCD_D[8]/GP0[8]	-	N12	I/O	IPD		
EMA_D[7]/MMCSD_DAT[7]/UHPI_HD[7]/GP0[7]/BOOT[13]	54	M15	I/O	IPU	MMC/SD, UHPI, GPIO, BOOT	
EMA_D[6]/MMCSD_DAT[6]/UHPI_HD[6]/GP0[6]	52	N13	I/O	IPU	MMC/SD, UHPI, GPIO	
EMA_D[5]/MMCSD_DAT[5]/UHPI_HD[5]/GP0[5]	51	N15	I/O	IPU		
EMA_D[4]/MMCSD_DAT[4]/UHPI_HD[4]/GP0[4]	49	P13	I/O	IPU		
EMA_D[3]/MMCSD_DAT[3]/UHPI_HD[3]/GP0[3]	48	P15	I/O	IPU		
EMA_D[2]/MMCSD_DAT[2]/UHPI_HD[2]/GP0[2]	46	R13	I/O	IPU		
EMA_D[1]/MMCSD_DAT[1]/UHPI_HD[1]/GP0[1]	45	R15	I/O	IPU		
EMA_D[0]/MMCSD_DAT[0]/UHPI_HD[0]/GP0[0]/BOOT[12]	44	T13	I/O	IPU	MMC/SD, UHPI, GPIO, BOOT	

(1) I = Input, O = Output, I/O = Bidirectional, Z = High impedance, PWR = Supply voltage, GND = Ground, A = Analog signal.
Note: The pin type shown refers to the input, output or high-impedance state of the pin function when configured as the the signal name highlighted in bold. All multiplexed signals may enter a high-impedance state when the configured function is input-only or the configured function supports high-Z operation. All GPIO signals can be used as input or output. For multiplexed pins where functions have different types (ie., input versus output), the table reflects the pin function direction for that particular peripheral.
(2) IPD = Internal Pulldown resistor, IPU = Internal Pullup resistor

Copyright © 2008–2014, Texas Instruments Incorporated

Table 3-9. External Memory Interface A (EMIFA) Terminal Functions (continued)

SIGNAL NAME	PIN NO		TYPE(1)	PULL(2)	MUXED	DESCRIPTION
	PTP	ZKB				
EMA_A[12]/LCD_MCLK/GP1[12]	42	N11	O	IPU	LCD, GPIO	EMIFA address bus
EMA_A[11] /LCD_AC_ENB_CS/GP1[11]	41	P11	O	IPU		
EMA_A[10]/LCD_VSYNC/GP1[10]	27	N8	O	IPU		
EMA_A[9]/LCD_HSYNC/GP1[9]	40	R11	O	IPU		
EMA_A[8]/LCD_PCLK/GP1[8]	39	T11	O	IPU		
EMA_A[7]/LCD_D[0]/GP1[7]	37	N10	O	IPD		
EMA_A[6]/LCD_D[1]/GP1[6]	36	P10	O	IPD		
EMA_A[5]/LCD_D[2]/GP1[5]	35	R10	O	IPD		
EMA_A[4]/LCD_D[3]/GP1[4]	34	T10	O	IPD		
EMA_A[3]/LCD_D[6]/GP1[3]	32	N9	O	IPD		
EMA_A[2]/MMCSD_CMD/UHPI_HCNTL1/GP1[2]	31	P9	O	IPU	MMCSD, UHPI, GPIO	EMIFA address bus
EMA_A[1]/MMCSD_CLK/UHPI_HCNTL0/GP1[1]	30	R9	O	IPU		
EMA_A[0]/LCD_D[7]/GP1[0]	29	T9	O	IPD	LCD, GPIO	
EMA_BA[1]/LCD_D[5]/UHPI_HHWIL/GP1[13]	26	P8	O	IPU	LCD, UHPI, GPIO	EMIFA bank address
EMA_BA[0]/LCD_D[4]/GP1[14]	25	R8	O	IPU	LCD, GPIO	
EMA_CLK/OBSCLK/AHCLKR2/GP1[15]	-	R12	O	IPU	McASP2, GPIO	EMIFA clock
EMA_SDCKE/GP2[0]	-	T12	O	IPU	GPIO	EMIFA SDRAM clock enable
EMA_RAS/EMA_CS[5]/GP2[2]	-	N7	O	IPU	EMIF A chip select, GPIO	EMIFA SDRAM row address strobe
EMA_CAS/EMA_CS[4]/GP2[1]	-	L16	O	IPU		EMIFA SDRAM column address strobe
EMA_RAS/**EMA_CS[5]** /GP2[2]	-	N7	O	IPU	EMIF A SDRAM, GPIO	EMIFA Async Chip Select
EMA_CAS/**EMA_CS[4]** /GP2[1]	-	L16	O	IPU		
EMA_CS[3]/AMUTE2/GP2[6]	21	T7	O	IPU	McASP2, GPIO	
EMA_CS[2]/UHPI_HCS/GP2[5]/BOOT[15]	23	P7	O	IPU	UHPI, GPIO, BOOT	
EMA_CS[0]/UHPI_HAS/GP2[4]	-	T8	O	IPU	UHPI, GPIO	EMIFA SDRAM chip select
EMA_WE/UHPI_HRW/AXR0[12]/GP2[3]/BOOT[14]	55	M13	O	IPU	UHPI, MCASP0, GOPIO, BOOT	EMIFA SDRAM write enable
EMA_WE_DQM[1] /UHPI_HDS2/AXR0[14]/GP2[8]	-	P12	O	IPU	UHPI, McASP, GPIO	EMIFA write enable/data mask for EMA_D[15:8]
EMA_WE_DQM[0] /UHPI_HINT/AXR0[15]/GP2[9]	-	M14	O	IPU		EMIFA write enable/data mask for EMA_D[7:0]
EMA_OE/UHPI_HDS1/AXR0[13]/GP2[7]	22	R7	O	IPU	UHPI, McASP0, GPIO	EMIFA output enable
EMA_WAIT[0]/ UHPI_HRDY/GP2[10]	19	N6	I	IPU	UHPI, GPIO	EMIFA wait input/interrupt

Copyright © 2008–2014, Texas Instruments Incorporated

3.6.5 External Memory Interface B (only SDRAM)

Table 3-10. External Memory Interface B (EMIFB) Terminal Functions

SIGNAL NAME	PIN NO		TYPE(1)	PULL(2)	MUXED	DESCRIPTION
	PTP	ZKB				
EMB_D[31]	-	G14	I/O	IPD		EMIFB SDRAM data bus
EMB_D[30]	-	F15	I/O	IPD		
EMB_D[29]	-	F14	I/O	IPD		
EMB_D[28]	-	E15	I/O	IPD		
EMB_D[27]	-	E14	I/O	IPD		
EMB_D[26]	-	A14	I/O	IPD		
EMB_D[25]	-	B14	I/O	IPD		
EMB_D[24]	-	A13	I/O	IPD		
EMB_D[23]	-	L15	I/O	IPD		
EMB_D[22]	-	L14	I/O	IPD		
EMB_D[21]	-	K16	I/O	IPD		
EMB_D[20]	-	K13	I/O	IPD		
EMB_D[19]	-	J14	I/O	IPD		
EMB_D[18]	-	H15	I/O	IPD		
EMB_D[17]	-	H14	I/O	IPD		
EMB_D[16]	-	G15	I/O	IPD		
EMB_D[15]/GP6[15]	74	F13	I/O	IPD	GPIO	
EMB_D[14]/GP6[14]	76	E16	I/O	IPD		
EMB_D[13]/GP6[13]	78	E13	I/O	IPD		
EMB_D[12]/GP6[12]	79	D16	I/O	IPD		
EMB_D[11]/GP6[11]	80	D15	I/O	IPD		
EMB_D[10]/GP6[10]	82	D14	I/O	IPD		
EMB_D[9]/GP6[9]	83	D13	I/O	IPD		
EMB_D[8]/GP6[8]	84	C16	I/O	IPD		
EMB_D[7]/GP6[7]	62	J16	I/O	IPD		
EMB_D[6]/GP6[6]	63	J15	I/O	IPD		
EMB_D[5]/GP6[5]	64	J13	I/O	IPD		
EMB_D[4]/GP6[4]	66	H16	I/O	IPD		
EMB_D[3]/GP6[3]	68	H13	I/O	IPD		
EMB_D[2]/GP6[2]	70	G16	I/O	IPD		
EMB_D[1]/GP6[1]	72	G13	I/O	IPD		
EMB_D[0]/GP6[0]	73	F16	I/O	IPD		
EMB_A[12]/GP3[13]	89	B15	O	IPD	GPIO	EMIFB SDRAM row/column address bus
EMB_A[11]/GP7[13]	91	B12	O	IPD		
EMB_A[10]/GP7[12]	105	A9	O	IPD		
EMB_A[9]/GP7[11]	92	C12	O	IPD		
EMB_A[8]/GP7[10]	94	D12	O	IPD		
EMB_A[7]/GP7[9]	95	A11	O	IPD		
EMB_A[6]/GP7[8]	96	B11	O	IPD		
EMB_A[5]/GP7[7]	97	C11	O	IPD		

(1) I = Input, O = Output, I/O = Bidirectional, Z = High impedance, PWR = Supply voltage, GND = Ground, A = Analog signal.
Note: The pin type shown refers to the input, output or high-impedance state of the pin function when configured as the the signal name highlighted in bold. All multiplexed signals may enter a high-impedance state when the configured function is input-only or the configured function supports high-Z operation. All GPIO signals can be used as input or output. For multiplexed pins where functions have different types (ie., input versus output), the table reflects the pin function direction for that particular peripheral.
(2) IPD = Internal Pulldown resistor, IPU = Internal Pullup resistor

Copyright © 2008–2014, Texas Instruments Incorporated

Table 3-10. External Memory Interface B (EMIFB) Terminal Functions (continued)

SIGNAL NAME	PIN NO		TYPE[1]	PULL[2]	MUXED	DESCRIPTION
	PTP	ZKB				
EMB_A[4]/GP7[6]	98	D11	O	IPD	GPIO	EMIFB SDRAM row/column address
EMB_A[3]/GP7[5]	100	A10	O	IPD		
EMB_A[2]/GP7[4]	101	B10	O	IPD		
EMB_A[1]/GP7[3]	102	C10	O	IPD		
EMB_A[0]/GP7[2]	103	D10	O	IPD		
EMB_BA[1]/GP7[0]	106	B9	O	IPU		EMIFB SDRAM bank address
EMB_BA[0]/GP7[1]	107	C9	O	IPU		
EMB_CLK	86	C14	O	IPU		EMIF SDRAM clock
EMB_SDCKE	88	C13	O	IPU		EMIFB SDRAM clock enable
$\overline{\text{EMB_WE}}$	59	K15	O	IPU		EMIFB write enable
$\overline{\text{EMB_RAS}}$	110	A8	O	IPU		EMIFB SDRAM row address strobe
$\overline{\text{EMB_CAS}}$	57	L13	O	IPU		EMIFB column address strobe
$\overline{\text{EMB_CS[0]}}$	108	D9	O	IPU		EMIFB SDRAM chip select 0
$\overline{\text{EMB_WE_DQM[3]}}$	-	A12	O	IPU		EMIFB write enable/data mask for EMB_D
$\overline{\text{EMB_WE_DQM[2]}}$	-	B13	O	IPU		
$\overline{\text{EMB_WE_DQM[1]}}$ /GP5[14]	85	C15	O	IPU	GPIO	
$\overline{\text{EMB_WE_DQM[0]}}$ /GP5[15]	60	K14	O	IPU		

Copyright © 2008–2014, Texas Instruments Incorporated

3.6.6 Serial Peripheral Interface Modules (SPI0, SPI1)

Table 3-11. Serial Peripheral Interface (SPI) Terminal Functions

SIGNAL NAME	PIN NO		TYPE(1)	PULL(2)	MUXED	DESCRIPTION
	PTP	ZKB				
SPI0						
SPI0_SCS[0] /UART0_RTS/EQEP0B/GP5[4]/BOOT[4]	9	N4	I/O	IPU	UART0, EQEP0B, GPIO, BOOT	SPI0 chip select
SPI0_ENA /UART0_CTS/EQEP0A/GP5[3]/BOOT[3]	12	R5	I/O	IPU	UART0, EQEP0A, GPIO, BOOT	SPI0 enable
SPI0_CLK/EQEP1I/GP5[2]/BOOT[2]	11	T5	I/O	IPD	eQEP1, GPIO, BOOT	SPI0 clock
SPI0_SIMO[0]/EQEP0S/GP5[1]/BOOT[1]	18	P6	I/O	IPD	eQEP0, GPIO, BOOT	SPI0 data slave-in-master-out
SPI0_SOMI[0]/EQEP0I/GP5[0]/BOOT[0]	17	R6	I/O	IPD		SPI0 data slave-out-master-in
SPI1						
SPI1_SCS[0] /UART2_TXD/GP5[13]	8	P4	I/O	IPU	UART2, GPIO	SPI1 chip select
SPI1_ENA /UART2_RXD/GP5[12]	7	R4	I/O	IPU		SPI1 enable
SPI1_CLK/EQEP1S/GP5[7]/BOOT[7]	16	T6	I/O	IPD	eQEP1, GPIO, BOOT	SPI1 clock
SPI1_SIMO[0]/I2C1_SDA/GP5[6]/BOOT[6]	14	N5	I/O	IPU	I2C1, GPIO, BOOT	SPI1 data slave-in-master-out
SPI1_SOMI[0]/I2C1_SCL/GP5[5]/BOOT[5]	13	P5	I/O	IPU		SPI1 data slave-out-master-in

(1) I = Input, O = Output, I/O = Bidirectional, Z = High impedance, PWR = Supply voltage, GND = Ground, A = Analog signal.
Note: The pin type shown refers to the input, output or high-impedance state of the pin function when configured as the the signal name highlighted in bold. All multiplexed signals may enter a high-impedance state when the configured function is input-only or the configured function supports high-Z operation. All GPIO signals can be used as input or output. For multiplexed pins where functions have different types (ie., input versus output), the table reflects the pin function direction for that particular peripheral.
(2) IPD = Internal Pulldown resistor, IPU = Internal Pullup resistor

Copyright © 2008–2014, Texas Instruments Incorporated

3.6.7 Enhanced Capture/Auxiliary PWM Modules (eCAP0, eCAP1, eCAP2)

The eCAP Module pins function as either input captures or auxiliary PWM 32-bit outputs, depending upon how the eCAP module is programmed.

Table 3-12. Enhanced Capture Module (eCAP) Terminal Functions

SIGNAL NAME	PIN NO		TYPE(1)	PULL(2)	MUXED	DESCRIPTION
	PTP	ZKB				
eCAP0						
ACLKX0/**ECAP0**/**APWM0**/GP2[12]	126	C5	I/O	IPD	McASP0, GPIO	enhanced capture 0 input or auxiliary PWM 0 output
eCAP1						
ACLKR0/**ECAP1**/**APWM1**/GP2[15]	130	B4	I/O	IPD	McASP0, GPIO	enhanced capture 1 input or auxiliary PWM 1 output
eCAP2						
ACLKR1/**ECAP2**/**APWM2**/GP4[12]	165	L2	I/O	IPD	McASP1, GPIO	enhanced capture 2 input or auxiliary PWM 2 output

(1) I = Input, O = Output, I/O = Bidirectional, Z = High impedance, PWR = Supply voltage, GND = Ground, A = Analog signal.
Note: The pin type shown refers to the input, output or high-impedance state of the pin function when configured as the the signal name highlighted in bold. All multiplexed signals may enter a high-impedance state when the configured function is input-only or the configured function supports high-Z operation. All GPIO signals can be used as input or output. For multiplexed pins where functions have different types (ie., input versus output), the table reflects the pin function direction for that particular peripheral.
(2) IPD = Internal Pulldown resistor, IPU = Internal Pullup resistor

Copyright © 2008–2014, Texas Instruments Incorporated

3.6.8 Enhanced Pulse Width Modulators (eHRPWM0, eHRPWM1, eHRPWM2)

Table 3-13. Enhanced Pulse Width Modulator (eHRPWM) Terminal Functions

SIGNAL NAME	PIN NO		TYPE(1)	PULL(2)	MUXED	DESCRIPTION
	PTP	ZKB				
eHRPWM0						
ACLKX1/**EPWM0A**/GP3[15]	162	K3	I/O	IPD	McASP1, GPIO	eHRPWM0 A output (with high-resolution)
AHCLKX1/**EPWM0B**/GP3[14]	160	K2	I/O	IPD		eHRPWM0 B output.
AMUTE1/**EPWMTZ**/GP4[14]	132	D4	I/O	IPD	McASP1, eHRPWM1, GPIO, eHRPWM2	eHRPWM0 trip zone input
AFSX1/**EPWMSYNCI**/**EPWMSYNCO**/GP4[10]	163	K4	I/O	IPD	McASP1, eHRPWM0, GPIO	Sync input to eHRPWM0 module or sync output to external PWM
eHRPWM1						
AXR1[8]/**EPWM1A**/GP4[8]	168	M2	I/O	IPD	McASP1, GPIO	eHRPWM1 A (with high-resolution)
AXR1[7]/**EPWM1B**/GP4[7]	169	M3	I/O	IPD		eHRPWM1 B output
AMUTE1/**EPWMTZ**/GP4[14]	132	D4	I/O	IPD	McASP1, eHRPWM0, GPIO, eHRPWM2	eHRPWM1 trip zone input
eHRPWM2						
AXR1[6]/**EPWM2A**/GP4[6]	170	M4	I/O	IPD	McASP1, GPIO	eHRPWM2 A (with high-resolution)
AXR1[5]/**EPWM2B**/GP4[5]	171	N1	I/O	IPD		eHRPWM2 B output
AMUTE1/**EPWMTZ**/GP4[14]	132	D4	I/O	IPD	McASP1, eHRPWM0, GPIO, eHRPWM2	eHRPWM2 trip zone input

(1) I = Input, O = Output, I/O = Bidirectional, Z = High impedance, PWR = Supply voltage, GND = Ground, A = Analog signal.
Note: The pin type shown refers to the input, output or high-impedance state of the pin function when configured as the the signal name highlighted in bold. All multiplexed signals may enter a high-impedance state when the configured function is input-only or the configured function supports high-Z operation. All GPIO signals can be used as input or output. For multiplexed pins where functions have different types (ie., input versus output), the table reflects the pin function direction for that particular peripheral.
(2) IPD = Internal Pulldown resistor, IPU = Internal Pullup resistor

Copyright © 2008–2014, Texas Instruments Incorporated

3.6.9 Enhanced Quadrature Encoder Pulse Module (eQEP)

Table 3-14. Enhanced Quadrature Encoder Pulse Module (eQEP) Terminal Functions

SIGNAL NAME	PIN NO		TYPE(1)	PULL(2)	MUXED	DESCRIPTION
	PTP	ZKB				
eQEP0						
$\overline{\text{SPI0_ENA}}$/$\overline{\text{UART0_CTS}}$/**EQEP0A**/GP5[3]/BOOT[3]	12	R5	I	IPU	SPI0, UART0, GPIO, BOOT	eQEP0A quadrature input
$\overline{\text{SPI0_SCS[0]}}$/$\overline{\text{UART0_RTS}}$/**EQEP0B**/GP5[4]/BOOT[4]	9	N4	I	IPU		eQEP0B quadrature input
SPI0_SOMI[0]/**EQEP0I**/GP5[0]/BOOT[0]	17	R6	I	IPD	SPI0, GPIO, BOOT	eQEP0 index
SPI0_SIMO[0]/**EQEP0S**/GP5[1]/BOOT[1]	18	P6	I	IPD		eQEP0 strobe
eQEP1						
AXR1[3]/**EQEP1A**/GP4[3]	174	P1	I	IPD	McASP1, GPIO	eQEP1A quadrature input
AXR1[4]/**EQEP1B**/GP4[4]	173	N2	I	IPD		eQEP1B quadrature input
SPI0_CLK/**EQEP1I**/GP5[2]/BOOT[2]	11	T5	I	IPD	SPI0, GPIO, BOOT	eQEP1 index
SPI1_CLK/**EQEP1S**/GP5[7]/BOOT[7]	16	T6	I	IPD	SPI1, GPIO, BOOT	eQEP1 strobe

(1) I = Input, O = Output, I/O = Bidirectional, Z = High impedance, PWR = Supply voltage, GND = Ground, A = Analog signal.
Note: The pin type shown refers to the input, output or high-impedance state of the pin function when configured as the the signal name highlighted in bold. All multiplexed signals may enter a high-impedance state when the configured function is input-only or the configured function supports high-Z operation. All GPIO signals can be used as input or output. For multiplexed pins where functions have different types (ie., input versus output), the table reflects the pin function direction for that particular peripheral.
(2) IPD = Internal Pulldown resistor, IPU = Internal Pullup resistor

Copyright © 2008–2014, Texas Instruments Incorporated

3.6.10 Boot

Table 3-15. Boot Terminal Functions(1)

SIGNAL NAME	PIN NO		TYPE(2)	PULL(3)	MUXED	DESCRIPTION
	PTP	ZKB				
EMA_CS[2]/UHPI_HCS/GP2[5]/**BOOT[15]**	23	P7	I	IPU	EMIFA, UHPI, GPIO	BOOT[15]
EMA_WE/UHPI_HRW/AXR0[12]/GP2[3]/**BOOT[14]**	55	M13	I	IPU	EMIFA, UHPI, McASP0, GPIO	BOOT[14]
EMA_D[7]/MMCSD_DAT[7]/UHPI_HD[7]/GP0[7]/**BOOT[13]**	54	M15	I	IPU	EMIFA, MMC/SD, UHPI, GPIO	BOOT[13]
EMA_D[0]/MMCSD_DAT[0]/UHPI_HD[0]/GP0[0]/**BOOT[12]**	44	T13	I	IPU		BOOT[12]
AHCLKR0/RMII_MHZ_50_CLK/GP2[14]/**BOOT[11]**	129	A4	I	IPD	McASP0, EMAC, GPIO	BOOT[11]
AFSX0/GP2[13]/**BOOT[10]**	127	D5	I	IPD	McASP0, GPIO	BOOT[10]
UART0_TXD/I2C0_SCL/TM64P0_OUT12/GP5[9]/**BOOT[9]**	3	P3	I	IPU	UART0, I2C0, Timer0, GPIO	BOOT[9]
UART0_RXD/I2C0_SDA/TM64P0_IN12/GP5[8]/**BOOT[8]**	2	R3	I	IPU	UART0, I2C0, Timer0, GPIO	BOOT[8]
SPI1_CLK/EQEP1S/GP5[7]/**BOOT[7]**	16	T6	I	IPD	SPI1, eQEP1, GPIO	BOOT[7]
SPI1_SIMO[0]/I2C1_SDA/GP5[6]/**BOOT[6]**	14	N5	I	IPU	SPI1, I2C1, GPIO	BOOT[6]
SPI1_SOMI[0]/I2C1_SCL/GP5[5]/**BOOT[5]**	13	P5	I	IPU		BOOT[5]
SPI0_SCS[0]/UART0_RTS/EQEP0B/GP5[4]/**BOOT[4]**	9	N4	I	IPU	SPI0, UART0, eQEP0, GPIO	BOOT[4]
SPI0_ENA/UART0_CTS/EQEP0A/GP5[3]/**BOOT[3]**	12	R5	I	IPU	SPI0, UART0, eQEP0, GPIO	BOOT[3]
SPI0_CLK/EQEP1I/GP5[2]/**BOOT[2]**	11	T5	I	IPD	SPI0, eQEP1, GPIO	BOOT[2]
SPI0_SIMO[0]/EQEP0S/GP5[1]/**BOOT[1]**	18	P6	I	IPD	SPI0, eQEP0, GPIO	BOOT[1]
SPI0_SOMI[0]/EQEP0I/GP5[0]/**BOOT[0]**	17	R6	I	IPD		BOOT[0]

(1) Boot decoding will be defined in the ROM datasheet.
(2) I = Input, O = Output, I/O = Bidirectional, Z = High impedance, PWR = Supply voltage, GND = Ground, A = Analog signal.
Note: The pin type shown refers to the input, output or high-impedance state of the pin function when configured as the the signal name highlighted in bold. All multiplexed signals may enter a high-impedance state when the configured function is input-only or the configured function supports high-Z operation. All GPIO signals can be used as input or output. For multiplexed pins where functions have different types (ie., input versus output), the table reflects the pin function direction for that particular peripheral.
(3) IPD = Internal Pulldown resistor, IPU = Internal Pullup resistor

Copyright © 2008–2014, Texas Instruments Incorporated

3.6.11 Universal Asynchronous Receiver/Transmitters (UART0, UART1, UART2)

Table 3-16. Universal Asynchronous Receiver/Transmitter (UART) Terminal Functions

SIGNAL NAME	PIN NO		TYPE(1)	PULL(2)	MUXED	DESCRIPTION
	PTP	ZKB				
UART0						
UART0_RXD/I2C0_SDA/TM64P0_IN12/GP5[8]/BOOT[8]	2	R3	I	IPU	I2C0, BOOT, Timer0, GPIO,	UART0 receive data
UART0_TXD/I2C0_SCL/TM64P0_OUT12/GP5[9]/BOOT[9]	3	P3	O	IPU	I2C0, Timer0, GPIO, BOOT	UART0 transmit data
$\overline{\text{SPI0_SCS[0]}}$/ **$\overline{\text{UART0_RTS}}$** /EQEP0B/GP5[4]/BOOT[4]	9	N4	O	IPU	SPI0, eQEP0, GPIO, BOOT	UART0 ready-to-send output
$\overline{\text{SPI0_ENA}}$/ **$\overline{\text{UART0_CTS}}$** /EQEP0A/GP5[3]/BOOT[3]	12	R5	I	IPU		UART0 clear-to-send input
UART1						
UART1_RXD/AXR0[9]/GP3[9](3)	122	C6	I	IPD	McASP0, GPIO	UART1 receive data
UART1_TXD/AXR0[10]/GP3[10](3)	123	D6	O	IPD		UART1 transmit data
UART2						
$\overline{\text{SPI1_ENA}}$/**UART2_RXD**/GP5[12]	7	R4	I	IPU	SPI1, GPIO	UART2 receive data
$\overline{\text{SPI1_SCS[0]}}$/**UART2_TXD**/GP5[13]	8	P4	O	IPU		UART2 transmit data

(1) I = Input, O = Output, I/O = Bidirectional, Z = High impedance, PWR = Supply voltage, GND = Ground, A = Analog signal.
Note: The pin type shown refers to the input, output or high-impedance state of the pin function when configured as the the signal name highlighted in bold. All multiplexed signals may enter a high-impedance state when the configured function is input-only or the configured function supports high-Z operation. All GPIO signals can be used as input or output. For multiplexed pins where functions have different types (ie., input versus output), the table reflects the pin function direction for that particular peripheral.
(2) IPD = Internal Pulldown resistor, IPU = Internal Pullup resistor
(3) As these signals are internally pulled down while the device is in reset, it is necessary to externally pull them high with resistors if UART1 boot mode is used. Please see the TMS320C6745/C6747 DSP Technical Reference Manual (SPRUH91) for more for details on entering UART1 boot mode.

Copyright © 2008–2014, Texas Instruments Incorporated

3.6.12 Inter-Integrated Circuit Modules (I2C0, I2C1)

Table 3-17. Inter-Integrated Circuit (I2C) Terminal Functions

SIGNAL NAME	PIN NO		TYPE(1)	PULL(2)	MUXED	DESCRIPTION
	PTP	ZKB				
I2C0						
UART0_RXD/**I2C0_SDA**/TM64P0_IN12/GP5[8]/BOOT[8]	2	R3	I/O	IPU	UART0, Timer0, GPIO, BOOT	I2C0 serial data
UART0_TXD/**I2C0_SCL**/TM64P0_OUT12/GP5[9]/BOOT[9]	3	P3	I/O	IPU	UART0, Timer0, GPIO, BOOT	I2C0 serial clock
I2C1						
SPI1_SIMO[0]/**I2C1_SDA**/GP5[6]/BOOT[6]	14	N5	I/O	IPU	SPI1, GPIO, BOOT	I2C1 serial data
SPI1_SOMI[0]/**I2C1_SCL**/GP5[5]/BOOT[5]	13	P5	I/O	IPU		I2C1 serial clock

(1) I = Input, O = Output, I/O = Bidirectional, Z = High impedance, PWR = Supply voltage, GND = Ground, A = Analog signal.
Note: The pin type shown refers to the input, output or high-impedance state of the pin function when configured as the the signal name highlighted in bold. All multiplexed signals may enter a high-impedance state when the configured function is input-only or the configured function supports high-Z operation. All GPIO signals can be used as input or output. For multiplexed pins where functions have different types (ie., input versus output), the table reflects the pin function direction for that particular peripheral.
(2) IPD = Internal Pulldown resistor, IPU = Internal Pullup resistor

Copyright © 2008–2014, Texas Instruments Incorporated

3.6.13 Timers

Table 3-18. Timers Terminal Functions

SIGNAL NAME	PIN NO		TYPE(1)	PULL(2)	MUXED	DESCRIPTION
	PTP	ZKB				
TIMER0						
UART0_RXD/I2C0_SDA/**TM64P0_IN12**/GP5[8]/BOOT[8]	2	R3	I	IPU	UART0, I2C0, GPIO, BOOT	Timer0 lower input
UART0_TXD/I2C0_SCL/**TM64P0_OUT12**/GP5[9]/BOOT[9]	3	P3	O	IPU		Timer0 lower output
TIMER1 (Watchdog)						
No external pins. The Timer1 peripheral pins are not pinned out as external pins.						

(1) I = Input, O = Output, I/O = Bidirectional, Z = High impedance, PWR = Supply voltage, GND = Ground, A = Analog signal.
Note: The pin type shown refers to the input, output or high-impedance state of the pin function when configured as the the signal name highlighted in bold. All multiplexed signals may enter a high-impedance state when the configured function is input-only or the configured function supports high-Z operation. All GPIO signals can be used as input or output. For multiplexed pins where functions have different types (ie., input versus output), the table reflects the pin function direction for that particular peripheral.
(2) IPD = Internal Pulldown resistor, IPU = Internal Pullup resistor

Copyright © 2008–2014, Texas Instruments Incorporated

3.6.14 Universal Host-Port Interface (UHPI)

Note:

The UHPI module requires 16 data pins for the host port interface to function. Therefore on the PTP, the UHPI is not available.

Table 3-19. Universal Host-Port Interface (UHPI) Terminal Functions

SIGNAL NAME	PIN NO		TYPE(1)	PULL(2)	MUXED	DESCRIPTION
	PTP	ZKB				
EMA_D[15]/**UHPI_HD[15]**/LCD_D[15]/GP0[15]	-	M16	I/O	IPD	EMIFA, LCD, GPIO	UHPI data bus
EMA_D[14]/**UHPI_HD[14]**/LCD_D[14]/GP0[14]	-	N14	I/O	IPD		
EMA_D[13]/**UHPI_HD[13]**/LCD_D[13]/GP0[13]	-	N16	I/O	IPD		
EMA_D[12]/**UHPI_HD[12]**/LCD_D[12]/GP0[12]	-	P14	I/O	IPD		
EMA_D[11]/**UHPI_HD[11]**/LCD_D[11]/GP0[11]	-	P16	I/O	IPD		
EMA_D[10]/**UHPI_HD[10]**/LCD_D[10]/GP0[10]	-	R14	I/O	IPD		
EMA_D[9]/**UHPI_HD[9]**/LCD_D[9]/GP0[9]	-	T14	I/O	IPD		
EMA_D[8]/**UHPI_HD[8]**/LCD_D[8]/GP0[8]	-	N12	I/O	IPD		
EMA_D[7]/MMCSD_DAT[7]/**UHPI_HD[7]**/GP0[7]/ BOOT[13]	-	M15	I/O	IPU	EMIFA, MMC/SD, GPIO, BOOT	
EMA_D[6]/MMCSD_DAT[6]/**UHPI_HD[6]**/GP0[6]	-	N13	I/O	IPU	EMIFA, MMC/SD, GPIO	
EMA_D[5]/MMCSD_DAT[5]/**UHPI_HD[5]**/GP0[5]	-	N15	I/O	IPU		
EMA_D[4]/MMCSD_DAT[4]/**UHPI_HD[4]**/GP0[4]	-	P13	I/O	IPU		
EMA_D[3]/MMCSD_DAT[3]/**UHPI_HD[3]**/GP0[3]	-	P15	I/O	IPU		
EMA_D[2]/MMCSD_DAT[2]/**UHPI_HD[2]**/GP0[2]	-	R13	I/O	IPU		
EMA_D[1]/MMCSD_DAT[1]/**UHPI_HD[1]**/GP0[1]	-	R15	I/O	IPU		
EMA_D[0]/MMCSD_DAT[0]/**UHPI_HD[0]**/GP0[0]/ BOOT[12]	-	T13	I/O	IPU	EMIFA, MMC/SD, GPIO, BOOT	
EMA_A[2]/MMCSD_CMD/**UHPI_HCNTL1**/GP1[2]	-	P9	I/O	IPU	EMIFA, MMCSD_CMD, GPIO	UHPI access control
EMA_A[1]/MMCSD_CLK/**UHPI_HCNTL0**/GP1[1]	-	R9	I/O	IPU		
EMA_BA[1]/LCD_D[5]/**UHPI_HHWIL**/GP1[13]	-	P8	I/O	IPU	EMIFA, LCD, GPIO	UHPI half-word identification control
$\overline{\text{EMA_WE}}$/**UHPI_HR$\overline{\text{W}}$** /AXR0[12]/GP2[3]/BOOT[14]	-	M13	I/O	IPU	EMIFA, McASP, GPIO, BOOT	UHPI read/write
$\overline{\text{EMA_CS[2]}}$/ **$\overline{\text{UHPI_HCS}}$** /GP2[5]/BOOT[15]	-	P7	I/O	IPU	EMIFA, GPIO, BOOT	UHPI chip select
$\overline{\text{EMA_WE_DQM[1]}}$/ **$\overline{\text{UHPI_HDS2}}$** /AXR0[14]/GP2[8]	-	P12	I/O	IPU	EMIFA, McASP0, GPIO	UHPI data strobe
$\overline{\text{EMA_OE}}$/ **$\overline{\text{UHPI_HDS1}}$** /AXR0[13]/GP2[7]	-	R7	I/O	IPU		
$\overline{\text{EMA_WE_DQM[0]}}$/ **$\overline{\text{UHPI_HINT}}$** /AXR0[15]/GP2[9]	-	M14	I/O	IPU		UHPI host interrupt
EMA_WAIT[0]/ **$\overline{\text{UHPI_HRDY}}$** /GP2[10]	-	N6	I/O	IPU	EMIFA, GPIO	UHPI ready
$\overline{\text{EMA_CS[0]}}$/ **$\overline{\text{UHPI_HAS}}$** /GP2[4]	-	T8	I/O	IPU		UHPI address strobe

(1) I = Input, O = Output, I/O = Bidirectional, Z = High impedance, PWR = Supply voltage, GND = Ground, A = Analog signal.
Note: The pin type shown refers to the input, output or high-impedance state of the pin function when configured as the the signal name highlighted in bold. All multiplexed signals may enter a high-impedance state when the configured function is input-only or the configured function supports high-Z operation. All GPIO signals can be used as input or output. For multiplexed pins where functions have different types (ie., input versus output), the table reflects the pin function direction for that particular peripheral.
(2) IPD = Internal Pulldown resistor, IPU = Internal Pullup resistor

Copyright © 2008–2014, Texas Instruments Incorporated

3.6.15 Multichannel Audio Serial Ports (McASP0, McASP1, McASP2)

Table 3-20. Multichannel Audio Serial Ports (McASPs) Terminal Functions

SIGNAL NAME	PIN NO		TYPE(1)	PULL(2)	MUXED	DESCRIPTION
	PTP	ZKB				
McASP0						
EMA_WE_DQM[0]/UHPI_HINT/**AXR0[15]**/GP2[9]	-	M14	I/O	IPU	EMIFA, UHPI, GPIO	McASP0 serial data
EMA_WE_DQM[1]/UHPI_HDS2/**AXR0[14]**/GP2[8]	-	P12	I/O	IPU		
EMA_OE/UHPI_HDS1/**AXR0[13]**/GP2[7]	22	R7	I/O	IPU		
EMA_WE/UHPI_HRW/**AXR0[12]**/GP2[3]/BOOT[14]	55	M13	I/O	IPU	EMIFA, UHPI, GPIO, BOOT	
AXR0[11]/AXR2[0]/GP3[11]	124	A5	I/O	IPD	McASP2, GPIO	
UART1_TXD/**AXR0[10]**/GP3[10]	123	D6	I/O	IPD	UART1, GPIO	
UART1_RXD/**AXR0[9]**/GP3[9]	122	C6	I/O	IPD	UART1, GPIO	
AXR0[8]/MDIO_D/GP3[8]	121	B6	I/O	IPU	MDIO, GPIO	
AXR0[7]/MDIO_CLK/GP3[7]	120	A6	I/O	IPD		
AXR0[6]/RMII_RXER/ACLKR2/GP3[6]	118	D7	I/O	IPD	EMAC, McASP2, GPIO	
AXR0[5]/RMII_RXD[1]/AFSX2/GP3[5]	117	C7	I/O	IPD		
AXR0[4]/RMII_RXD[0]/AXR2[1]/GP3[4]	116	B7	I/O	IPD		
AXR0[3]/RMII_CRS_DV/AXR2[2]/GP3[3]	115	A7	I/O	IPD		
AXR0[2]/RMII_TXEN/AXR2[3]/GP3[2]	113	D8	I/O	IPD		
AXR0[1]/RMII_TXD[1]/ACLKX2/GP3[1]	112	C8	I/O	IPD		
AXR0[0]/RMII_TXD[0]/AFSR2/GP3[0]	111	B8	I/O	IPD		
AHCLKX0/AHCLKX2/USB_REFCLKIN/GP2[11]	125	B5	I/O	IPD	McASP2, USB, GPIO	McASP0 transmit master clock
ACLKX0/ECAP0/APWM0/GP2[12]	126	C5	I/O	IPD	eCAP0, GPIO	McASP0 transmit bit clock
AFSX0/GP2[13]/BOOT[10]	127	D5	I/O	IPD	GPIO, BOOT	McASP0 transmit frame sync
AHCLKR0/RMII_MHZ_50_CLK/GP2[14]/BOOT[11]	129	A4	I/O	IPD	EMAC, GPIO, BOOT	McASP0 receive master clock
ACLKR0/ECAP1/APWM1/GP2[15]	130	B4	I/O	IPD	eCAP1, GPIO	McASP0 receive bit clock
AFSR0/GP3[12]	131	C4	I/O	IPD	GPIO	McASP0 receive frame sync
AMUTE0/RESETOUT	-	L4	O	IPD	RESETOUT	McASP0 mute output

(1) I = Input, O = Output, I/O = Bidirectional, Z = High impedance, PWR = Supply voltage, GND = Ground, A = Analog signal.
Note: The pin type shown refers to the input, output or high-impedance state of the pin function when configured as the the signal name highlighted in bold. All multiplexed signals may enter a high-impedance state when the configured function is input-only or the configured function supports high-Z operation. All GPIO signals can be used as input or output. For multiplexed pins where functions have different types (ie., input versus output), the table reflects the pin function direction for that particular peripheral.
(2) IPD = Internal Pulldown resistor, IPU = Internal Pullup resistor

Copyright © 2008–2014, Texas Instruments Incorporated

Table 3-20. Multichannel Audio Serial Ports (McASPs) Terminal Functions (continued)

SIGNAL NAME	PIN NO		TYPE(1)	PULL(2)	MUXED	DESCRIPTION
	PTP	ZKB				
McASP1						
AXR1[11]/GP5[11]	6	T4	I/O	IPU	GPIO	McASP1 serial data
AXR1[10]/GP5[10]	4	N3	I/O	IPU		
AXR1[9]/GP4[9]	-	M1	I/O	IPD		
AXR1[8]/EPWM1A/GP4[8]	168	M2	I/O	IPD	eHRPWM1 A, GPIO	
AXR1[7]/EPWM1B/GP4[7]	169	M3	I/O	IPD	eHRPWM1 B, GPIO	
AXR1[6]/EPWM2A/GP4[6]	170	M4	I/O	IPD	eHRPWM2 A, GPIO	
AXR1[5]/EPWM2B/GP4[5]	171	N1	I/O	IPD	eHRPWM2 B, GPIO	
AXR1[4]/EQEP1B/GP4[4]	173	N2	I/O	IPD	eQEP, GPIO	
AXR1[3]/EQEP1A/GP4[3]	174	P1	I/O	IPD		
AXR1[2]/GP4[2]	175	P2	I/O	IPD	GPIO	
AXR1[1]/GP4[1]	176	R2	I/O	IPD		
AXR1[0]/GP4[0]	1	T3	I/O	IPD		
AHCLKX1/EPWM0B/GP3[14]	160	K2	I/O	IPD	eHRPWM0, GPIO	McASP1 transmit master clock
ACLKX1/EPWM0A/GP3[15]	162	K3	I/O	IPD	eHRPWM0, GPIO	McASP1 transmit bit clock
AFSX1/EPWMSYNCI/EPWMSYNCO/GP4[10]	163	K4	I/O	IPD	eHRPWM0, GPIO	McASP1 transmit frame sync
AHCLKR1/GP4[11]	-	L1	I/O	IPD	GPIO	McASP1 receive master clock
ACLKR1/ECAP2/APWM2/GP4[12]	165	L2	I/O	IPD	eCAP2, GPIO	McASP1 receive bit clock
AFSR1/GP4[13]	166	L3	I/O	IPD	GPIO	McASP1 receive frame sync
AMUTE1/EPWMTZ/GP4[14]	132	D4	O	IPD	eHRPWM0, eHRPWM1, eHRPWM2, GPIO	McASP1 mute output
McASP2						
AXR0[0]/RMII_TXD[0]/**AFSR2**/GP3[0]	-	B8	I/O	IPD	McASP0, EMAC, GPIO	McASP2 serial data
AXR0[2]/RMII_TXEN/**AXR2[3]**/GP3[2]	-	D8	I/O	IPD		
AXR0[3]/RMII_CRS_DV/**AXR2[2]**/GP3[3]	-	A7	I/O	IPD		
AXR0[4]/RMII_RXD[0]/**AXR2[1]**/GP3[4]	-	B7	I/O	IPD		
AXR0[11]/**AXR2[0]**/GP3[11]	-	A5	I/O	IPD	McASP0, GPIO	
AHCLKX0/**AHCLKX2**/USB_REFCLKIN/GP2[11]	-	B5	I/O	IPD	McASP0, USB, GPIO	McASP2 transmit master clock
AXR0[1]/RMII_TXD[1]/**ACLKX2**/GP3[1]	-	C8	I/O	IPD		McASP2 transmit bit clock
AXR0[5]/RMII_RXD[1]/**AFSX2**/GP3[5]	-	C7	I/O	IPD	McASP0, EMAC, GPIO	McASP2 transmit frame sync
EMA_CLK/OBSCLK/**AHCLKR2**/GP1[15]	-	R12	I/O	IPU	EMIFA, GPIO	McASP2 receive master clock

Copyright © 2008–2014, Texas Instruments Incorporated

Table 3-20. Multichannel Audio Serial Ports (McASPs) Terminal Functions (continued)

SIGNAL NAME	PIN NO		TYPE(1)	PULL(2)	MUXED	DESCRIPTION
	PTP	ZKB				
AXR0[6]/RMII_RXER/**ACLKR2**/GP3[6]	-	D7	I/O	IPD	McASP0, EMAC, GPIO	McASP2 receive bit clock
$\overline{\text{EMA_CS[3]}}$/**AMUTE2**/GP2[6]	-	T7	O	IPU	EMIFA, GPIO	McASP2 mute output

Copyright © 2008–2014, Texas Instruments Incorporated

3.6.16 Universal Serial Bus Modules (USB0, USB1)

Table 3-21. Universal Serial Bus (USB) Terminal Functions

SIGNAL NAME	PIN NO		TYPE(1)	PULL(2)	DESCRIPTION
	PTP	ZKB			
USB0 2.0 OTG (USB0)					
USB0_DM	138	G4	A		USB0 PHY data minus
USB0_DP	137	F4	A		USB0 PHY data plus
USB0_VDDA33	140	H5	PWR		USB0 PHY 3.3-V supply
USB0_VDDA18	135	E3	PWR		USB0 PHY 1.8-V supply input
USB0_VDDA12(3)	134	C3	PWR		USB0 PHY 1.2-V LDO output for bypass cap For proper device operation, this pin is recommended to be connected via a 0.22-μF capacitor to VSS (GND), even if USB0 is not being used.
USB0_ID	-	D2	A		USB0 PHY identification (mini-A or mini-B plug)
USB0_VBUS	-	D3	A		USB0 bus voltage
USB0_DRVVBUS/GP4[15]	-	E4	O	IPD	USB0 controller VBUS control output
AHCLKX0/AHCLKX2/**USB_REFCLKIN**/GP2[11]	125	B5	I	IPD	USB_REFCLKIN. Optional clock input
USB1 1.1 OHCI (USB1)					
USB1_DM	-	B3	A		USB1 PHY data minus
USB1_DP	-	A3	A		USB1 PHY data plus
USB1_VDDA33	-	C1	PWR		USB1 PHY 3.3-V supply
USB1_VDDA18	-	C2	PWR		USB1 PHY 1.8-V supply
AHCLKX0/AHCLKX2/**USB_REFCLKIN**/GP2[11]	125	B5	I	IPD	USB_REFCLKIN. Optional clock input.

(1) I = Input, O = Output, I/O = Bidirectional, Z = High impedance, PWR = Supply voltage, GND = Ground, A = Analog signal.
Note: The pin type shown refers to the input, output or high-impedance state of the pin function when configured as the the signal name highlighted in bold. All multiplexed signals may enter a high-impedance state when the configured function is input-only or the configured function supports high-Z operation. All GPIO signals can be used as input or output. For multiplexed pins where functions have different types (ie., input versus output), the table reflects the pin function direction for that particular peripheral.
(2) IPD = Internal Pulldown resistor, IPU = Internal Pullup resistor
(3) Core power supply LDO output for USB PHY.

Copyright © 2008–2014, Texas Instruments Incorporated

3.6.17 Ethernet Media Access Controller (EMAC)

Table 3-22. Ethernet Media Access Controller (EMAC) Terminal Functions

SIGNAL NAME	PIN NO		TYPE(1)	PULL(2)	MUXED	DESCRIPTION
	PTP	ZKB				
RMII						
AHCLKR0/**RMII_MHZ_50_CLK**/GP2[14]/BOOT[11]	129	A4	I/O	IPD	McASP0, GPIO, BOOT	EMAC 50-MHz clock input or output
AXR0[6]/**RMII_RXER**/ACLKR2/GP3[6]	118	D7	I	IPD	McASP0, McASP2, GPIO	EMAC RMII receiver error
AXR0[5]/**RMII_RXD[1]**/AFSX2/GP3[5]	117	C7	I	IPD		EMAC RMII receive data
AXR0[4]/**RMII_RXD[0]**/AXR2[1]/GP3[4]	116	B7	I	IPD		
AXR0[3]/**RMII_CRS_DV**/AXR2[2]/GP3[3]	115	A7	I	IPD		EMAC RMII carrier sense data valid
AXR0[2]/**RMII_TXEN**/AXR2[3]/GP3[2]	113	D8	O	IPD		EMAC RMII transmit enable
AXR0[1]/**RMII_TXD[1]**/ACLKX2/GP3[1]	112	C8	O	IPD		EMAC RMII trasmit data
AXR0[0]/**RMII_TXD[0]**/AFSR2/GP3[0]	111	B8	O	IPD		
MDIO						
AXR0[8]/**MDIO_D**/GP3[8]	121	B6	I/O	IPU	McASP0, GPIO	MDIO data clock
AXR0[7]/**MDIO_CLK**/GP3[7]	120	A6	O	IPD		

(1) I = Input, O = Output, I/O = Bidirectional, Z = High impedance, PWR = Supply voltage, GND = Ground, A = Analog signal.
Note: The pin type shown refers to the input, output or high-impedance state of the pin function when configured as the the signal name highlighted in bold. All multiplexed signals may enter a high-impedance state when the configured function is input-only or the configured function supports high-Z operation. All GPIO signals can be used as input or output. For multiplexed pins where functions have different types (ie., input versus output), the table reflects the pin function direction for that particular peripheral.
(2) IPD = Internal Pulldown resistor, IPU = Internal Pullup resistor

Copyright © 2008–2014, Texas Instruments Incorporated

3.6.18 Multimedia Card/Secure Digital (MMC/SD)

Table 3-23. Multimedia Card/Secure Digital (MMC/SD) Terminal Functions

SIGNAL NAME	PIN NO		TYPE(1)	PULL(2)	MUXED	DESCRIPTION
	PTP	ZKB				
EMA_A[1]/**MMCSD_CLK**/UHPI_HCNTL0/GP1[1]	30	R9	O	IPU	EMIFA, UHPI, GPIO	MMCSD Clock
EMA_A[2]/**MMCSD_CMD**/UHPI_HCNTL1/GP1[2]	31	P9	I/O	IPU		MMCSD Command
EMA_D[7]/**MMCSD_DAT[7]**/UHPI_HD[7]/GP0[7]/BOOT[13]	54	M15	I/O	IPU	EMIFA, UHPI, GPIO, BOOT	MMC/SD data
EMA_D[6]/**MMCSD_DAT[6]**/UHPI_HD[6]/GP0[6]	52	N13	I/O	IPU	EMIFA, UHPI, GPIO	
EMA_D[5]/**MMCSD_DAT[5]**/UHPI_HD[5]/GP0[5]	51	N15	I/O	IPU		
EMA_D[4]/**MMCSD_DAT[4]**/UHPI_HD[4]/GP0[4]	49	P13	I/O	IPU		
EMA_D[3]/**MMCSD_DAT[3]**/UHPI_HD[3]/GP0[3]	48	P15	I/O	IPU		
EMA_D[2]/**MMCSD_DAT[2]**/UHPI_HD[2]/GP0[2]	46	R13	I/O	IPU		
EMA_D[1]/**MMCSD_DAT[1]**/UHPI_HD[1]/GP0[1]	45	R15	I/O	IPU		
EMA_D[0]/**MMCSD_DAT[0]**/UHPI_HD[0]/GP0[0]/BOOT[12]	44	T13	I/O	IPU	EMIFA, UHPI, GPIO, BOOT	

(1) I = Input, O = Output, I/O = Bidirectional, Z = High impedance, PWR = Supply voltage, GND = Ground, A = Analog signal.
Note: The pin type shown refers to the input, output or high-impedance state of the pin function when configured as the the signal name highlighted in bold. All multiplexed signals may enter a high-impedance state when the configured function is input-only or the configured function supports high-Z operation. All GPIO signals can be used as input or output. For multiplexed pins where functions have different types (ie., input versus output), the table reflects the pin function direction for that particular peripheral.
(2) IPD = Internal Pulldown resistor, IPU = Internal Pullup resistor

Copyright © 2008–2014, Texas Instruments Incorporated

3.6.19 Liquid Crystal Display Controller (LCD)

Table 3-24. Liquid Crystal Display Controller (LCD) Terminal Functions

SIGNAL NAME	PIN NO		TYPE(1)	PULL(2)	MUXED	DESCRIPTION
	PTP	ZKB				
EMA_D[15]/UHPI_HD[15]/**LCD_D [15]**/GP0[15]	-	M16	I/O	IPD	EMIFA, UHPI, GPIO	LCD data bus
EMA_D[14]/UHPI_HD[14]/**LCD_D[14]**/GP0[14]	-	N14	I/O	IPD		
EMA_D[13]/UHPI_HD[13]/**LCD_D[13]**/GP0[13]	-	N16	I/O	IPD		
EMA_D[12]/UHPI_HD[12]/**LCD_D[12]**/GP0[12]	-	P14	I/O	IPD		
EMA_D[11]/UHPI_HD[11]/**LCD_D[11]**/GP0[11]	-	P16	I/O	IPD		
EMA_D[10]/UHPI_HD[10]/**LCD_D[10]**/GP0[10]	-	R14	I/O	IPD		
EMA_D[9]/UHPI_HD[9]/**LCD_D[9]**/GP0[9]	-	T14	I/O	IPD		
EMA_D[8]/UHPI_HD[8]/**LCD_D[8]**/GP0[8]	-	N12	I/O	IPD		
EMA_A[0]/**LCD_D[7]**/GP1[0]	-	T9	I/O	IPD	EMIFA, GPIO	
EMA_A[3]/**LCD_D[6]**/GP1[3]	-	N9	I/O	IPD		
EMA_BA[1]/**LCD_D[5]**/UHPI_HHWIL/GP1[13]	-	P8	I/O	IPU	EMIFA, UHPI, GPIO	
EMA_BA[0]/**LCD_D[4]**/GP1[14]	-	R8	I/O	IPU	EMIFA, GPIO	
EMA_A[4]/**LCD_D[3]**/GP1[4]	-	T10	I/O	IPD		
EMA_A[5]/**LCD_D[2]**/GP1[5]	-	R10	I/O	IPD		
EMA_A[6]/**LCD_D[1]**/GP1[6]	-	P10	I/O	IPD		
EMA_A[7]/**LCD_D[0]**/GP1[7]	-	N10	I/O	IPD		
EMA_A[8]/**LCD_PCLK**/GP1[8]	-	T11	O	IPU		LCD pixel clock
EMA_A[9]/**LCD_HSYNC**/GP1[9]	-	R11	O	IPU		LCD horizontal sync
EMA_A[10]/**LCD_VSYNC**/GP1[10]	-	N8	O	IPU		LCD vertical sync
EMA_A[11]/ $\overline{\textbf{LCD_AC_ENB_CS}}$ /GP1[11]	-	P11	O	IPU		LCD AC bias enable chip select
EMA_A[12]/**LCD_MCLK**/GP1[12]	-	N11	O	IPU		LCD memory clock

(1) I = Input, O = Output, I/O = Bidirectional, Z = High impedance, PWR = Supply voltage, GND = Ground, A = Analog signal.
Note: The pin type shown refers to the input, output or high-impedance state of the pin function when configured as the the signal name highlighted in bold. All multiplexed signals may enter a high-impedance state when the configured function is input-only or the configured function supports high-Z operation. All GPIO signals can be used as input or output. For multiplexed pins where functions have different types (ie., input versus output), the table reflects the pin function direction for that particular peripheral.
(2) IPD = Internal Pulldown resistor, IPU = Internal Pullup resistor

Copyright © 2008–2014, Texas Instruments Incorporated

3.6.20 General Purpose Input Output (GPIO)

Table 3-25. General Purpose Input Output Terminal Functions

SIGNAL NAME	PIN NO		TYPE(1)	PULL(2)	MUXED	DESCRIPTION
	PTP	ZKB				
GP0						
EMA_D[15]/UHPI_HD[15]/LCD_D[15]/**GP0[15]**	-	M16	I/O	IPD	EMIFA, UHPI, LCD	GPIO Bank 0
EMA_D[14]/UHPI_HD[14]/LCD_D[14]/**GP0[14]**	-	N14	I/O	IPD		
EMA_D[13]/UHPI_HD[13]/LCD_D[13]/**GP0[13]**	-	N16	I/O	IPD		
EMA_D[12]/UHPI_HD[12]/LCD_D[12]/**GP0[12]**	-	P14	I/O	IPD		
EMA_D[11]/UHPI_HD[11]/LCD_D[11]/**GP0[11]**	-	P16	I/O	IPD		
EMA_D[10]/UHPI_HD[10]/LCD_D[10]/**GP0[10]**	-	R14	I/O	IPD		
EMA_D[9]/UHPI_HD[9]/LCD_D[9]/**GP0[9]**	-	T14	I/O	IPD		
EMA_D[8]/UHPI_HD[8]/LCD_D[8]/**GP0[8]**	-	N12	I/O	IPD		
EMA_D[7]/MMCSD_DAT[7]/UHPI_HD[7]/**GP0[7]**/BOOT[13]	54	M15	I/O	IPU	EMIFA, MMC/SD, UHPI, BOOT	
EMA_D[6]/MMCSD_DAT[6]/UHPI_HD[6]/**GP0[6]**	52	N13	I/O	IPU	EMIFA, MMC/SD, UHPI	
EMA_D[5]/MMCSD_DAT[5]/UHPI_HD[5]/**GP0[5]**	51	N15	I/O	IPU		
EMA_D[4]/MMCSD_DAT[4]/UHPI_HD[4]/**GP0[4]**	49	P13	I/O	IPU		
EMA_D[3]/MMCSD_DAT[3]/UHPI_HD[3]/**GP0[3]**	48	P15	I/O	IPU		
EMA_D[2]/MMCSD_DAT[2]/UHPI_HD[2]/**GP0[2]**	46	R13	I/O	IPU		
EMA_D[1]/MMCSD_DAT[1]/UHPI_HD[1]/**GP0[1]**	45	R15	I/O	IPU		
EMA_D[0]/MMCSD_DAT[0]/UHPI_HD[0]/**GP0[0]**/BOOT[12]	44	T13	I/O	IPU	EMIFA, MMC/SD, UHPI, BOOT	
GP1						
EMA_CLK/OBSCLK/AHCLKR2/**GP1[15]**	-	R12	O	IPU	EMIFA, McASP2	GPIO Bank 1
EMA_BA[0]/LCD_D[4]/**GP1[14]**	25	R8	O	IPU	EMIFA, LCD	
EMA_BA[1]/LCD_D[5]/UHPI_HHWIL/**GP1[13]**	26	P8	O	IPU	EMIFA, LCD, UHPI	
EMA_A[12]/LCD_MCLK/**GP1[12]**	42	N11	O	IPU	EMIFA, LCD	
EMA_A[11]/ $\overline{\text{LCD_AC_ENB_CS}}$/**GP1[11]**	41	P11	O	IPU		
EMA_A[10]/LCD_VSYNC/**GP1[10]**	27	N8	O	IPU		
EMA_A[9]/LCD_HSYNC/**GP1[9]**	40	R11	O	IPU		
EMA_A[8]/LCD_PCLK/**GP1[8]**	39	T11	O	IPU		
EMA_A[7]/LCD_D[0]/**GP1[7]**	37	N10	O	IPD		
EMA_A[6]/LCD_D[1]/**GP1[6]**	36	P10	O	IPD		
EMA_A[5]/LCD_D[2]/**GP1[5]**	35	R10	O	IPD		
EMA_A[4]/LCD_D[3]/**GP1[4]**	34	T10	O	IPD		
EMA_A[3]/LCD_D[6]/**GP1[3]**	32	N9	O	IPD		
EMA_A[2]/MMCSD_CMD/UHPI_HCNTL1/**GP1[2]**	31	P9	O	IPU	EMIFA, MMCSD, UHPI	
EMA_A[1]/MMCSD_CLK/UHPI_HCNTL0/**GP1[1]**	30	R9	O	IPU		
EMA_A[0]/LCD_D[7]/**GP1[0]**	29	T9	O	IPD	EMIFA, LCD	

(1) I = Input, O = Output, I/O = Bidirectional, Z = High impedance, PWR = Supply voltage, GND = Ground, A = Analog signal.
Note: The pin type shown refers to the input, output or high-impedance state of the pin function when configured as the the signal name highlighted in bold. All multiplexed signals may enter a high-impedance state when the configured function is input-only or the configured function supports high-Z operation. All GPIO signals can be used as input or output. For multiplexed pins where functions have different types (ie., input versus output), the table reflects the pin function direction for that particular peripheral.
(2) IPD = Internal Pulldown resistor, IPU = Internal Pullup resistor

Copyright © 2008–2014, Texas Instruments Incorporated

Table 3-25. General Purpose Input Output Terminal Functions (continued)

SIGNAL NAME	PIN NO		TYPE(1)	PULL(2)	MUXED	DESCRIPTION
	PTP	ZKB				
GP2						
ACLKR0/ECAP1/APWM1/**GP2[15]**	130	b4	I/O	IPD	McASP0, eCAP1	GPIO Bank 2
AHCLKR0/RMII_MHZ_50_CLK/**GP2[14]**/BOOT[11]	129	A4	I/O	IPD	McASP0, EMAC, BOOT	
AFSX0/**GP2[13]**/BOOT[10]	127	D5	I/O	IPD	McASP0, BOOT	
ACLKX0/ECAP0/APWM0/**GP2[12]**	126	CD	I/O	IPD	McASP0, eCAP0	
AHCLKX0/AHCLKX2/USB_REFCLKIN/**GP2[11]**	125	B5	I	IPD	McASP0, McASP2, USB	
EMA_WAIT[0]/ $\overline{\text{UHPI_HRDY}}$/**GP2[10]**	19	N6	I	IPU	EMIFA, UHPI	
$\overline{\text{EMA_WE_DQM[0]}}$ /$\overline{\text{UHPI_HINT}}$/AXR0[15]/**GP2[9]**	-	M14	O	IPU	EMIFA, UHPI, McASP0	
$\overline{\text{EMA_WE_DQM[1]}}$ /$\overline{\text{UHPI_HDS2}}$/AXR0[14]/**GP2[8]**	-	P12	O	IPU		
$\overline{\text{EMA_OE}}$ /$\overline{\text{UHPI_HDS1}}$/AXR0[13]/**GP2[7]**	22	R7	O	IPU		
$\overline{\text{EMA_CS[3]}}$ /AMUTE2/**GP2[6]**	21	T7	O	IPU	EMIFA, McASP2	
$\overline{\text{EMA_CS[2]}}$ /$\overline{\text{UHPI_HCS}}$/**GP2[5]**/BOOT[15]	23	P7	O	IPU	EMIFA, UHPI, BOOT	
$\overline{\text{EMA_CS[0]}}$ /$\overline{\text{UHPI_HAS}}$/**GP2[4]**	-	T8	O	IPU	EMIFA, UHPI	
$\overline{\text{EMA_WE}}$ /UHPI_H$\overline{\text{RW}}$/AXR0[12]/**GP2[3]**/BOOT[14]	55	M13	O	IPU	EMIFA, UHPI, MCASP0, BOOT	
$\overline{\text{EMA_RAS}}$ /$\overline{\text{EMA_CS[5]}}$/**GP2[2]**	-	N7	O	IPU	EMIFA, EMIFA	
$\overline{\text{EMA_CAS}}$ /$\overline{\text{EMA_CS[4]}}$/**GP2[1]**	-	L16	O	IPU		
EMA_SDCKE/**GP2[0]**	-	T12	O	IPU	EMIFA	
GP3						
ACLKX1/EPWM0A/**GP3[15]**	162	K3	I/O	IPD	McASP1, eHRPWM0	GPIO Bank 3
AHCLKX1/EPWM0B/**GP3[14]**	160	K2	I/O	IPD		
EMB_A[12]/**GP3[13]**	89	B15	O	IPD	EMIFB	
AFSR0/**GP3[12]**	131	C4	I/O	IPD	McASP0	
AXR0[11]/AXR2[0]/**GP3[11]**	-	A5	I/O	IPD	EMAC,	
UART1_TXD/AXR0[10]/**GP3[10]**	123	D6	I/O	IPD	UART1, McASP0	
UART1_RXD/AXR0[9]/**GP3[9]**	122	C6	I/O	IPD		
AXR0[8]/MDIO_D/**GP3[8]**	121	B6	I/0	IPU	McASP0, MDIO	
AXR0[7]/MDIO_CLK/**GP3[7]**	120	A6	O	IPD		
AXR0[6]/RMII_RXER/ACLKR2/**GP3[6]**	118	D7	I	IPD	McASP0, EMAC, McASP2	
AXR0[5]/RMII_RXD[1]/AFSX2/**GP3[5]**	117	C7	I	IPD		
AXR0[4]/RMII_RXD[0]/AXR2[1]/**GP3[4]**	116	B7	I	IPD		
AXR0[3]/RMII_CRS_DV/AXR2[2]/**GP3[3]**	115	A7	I	IPD		
AXR0[2]/RMII_TXEN/AXR2[3]/**GP3[2]**	113	D8	O	IPD		
AXR0[1]/RMII_TXD[1]/ACLKX2/**GP3[1]**	112	C8	O	IPD		
AXR0[0]/RMII_TXD[0]/AFSR2/**GP3[0]**	111	B8	O	IPD		

Copyright © 2008–2014, Texas Instruments Incorporated

Table 3-25. General Purpose Input Output Terminal Functions (continued)

SIGNAL NAME	PIN NO		TYPE(1)	PULL(2)	MUXED	DESCRIPTION
	PTP	ZKB				
GP4						
USB0_DRVVBUS/**GP4[15]**	-	E4	O	IPD	USB0	GPIO Bank 4
AMUTE1/EPWMTZ/**GP4[14]**	132	D4	O	IPD	McASP1, eHRPWM0, eHRPWM1, eHRPWM2	
AFSR1/**GP4[13]**	166	L3	I/O	IPD	McASP1	
ACLKR1/ECAP2/APWM2/**GP4[12]**	165	L2	I/O	IPD	McASP1, eCAP2	
AHCLKR1/**GP4[11]**	-	L1	I/O	IPD	McASP1	
AFSX1/EPWMSYNCI/EPWMSYNCO/**GP4[10]**	163	K4	I/O	IPD	McASP1, eHRPWM0	
AXR1[9]/**GP4[9]**	-	M1	I/O	IPD	McASP1	
AXR1[8]/EPWM1A/**GP4[8]**	168	M2	I/O	IPD	McASP1, eHRPWM1 A	
AXR1[7]/EPWM1B/**GP4[7]**	169	M3	I/O	IPD	McASP1, eHRPWM1 B	
AXR1[6]/EPWM2A/**GP4[6]**	170	M4	I/O	IPD	McASP1, eHRPWM2 A	
AXR1[5]/EPWM2B/**GP4[5]**	171	N1	I/O	IPD	McASP1, eHRPWM2 B	
AXR1[4]/EQEP1B/**GP4[4]**	173	N2	I/O	IPD	McASP1, eQEP	
AXR1[3]/EQEP1A/**GP4[3]**	174	P1	I/O	IPD		
AXR1[2]/**GP4[2]**	175	P2	I/O	IPD	McASP1	
AXR1[1]/**GP4[1]**	176	R2	I/O	IPD		
AXR1[0]/**GP4[0]**	1	T3	I/O	IPD		
GP5						
$\overline{\text{EMB_WE_DQM[0]}}$/**GP5[15]**	60	K14	O	IPU	EMIFB	GPIOBank 5
$\overline{\text{EMB_WE_DQM[1]}}$/**GP5[14]**	85	C15	O	IPU		
$\overline{\text{SPI1_SCS[0]}}$/UART2_TXD/**GP5[13]**	8	P4	O	IPU	SPI1, UART2	
$\overline{\text{SPI1_ENA}}$/UART2_RXD/**GP5[12]**	7	R4	I	IPU		
AXR1[11]/**GP5[11]**	6	T4	I/O	IPU	McASP1	
AXR1[10]/**GP5[10]**	4	N3	I/O	IPU		
UART0_TXD/I2C0_SCL/TM64P0_OUT12/**GP5[9]**/BOOT[9]	2	R3	I	IPU	UART0, I2C0, BOOT	
UART0_RXD/I2C0_SDA/TM64P0_IN12/**GP5[8]**/BOOT[8]	3	P3	O	IPU		
SPI1_CLK/EQEP1S/**GP5[7]**/BOOT[7]	16	T6	I	IPD	SPI1, eQEP1, BOOT	
SPI1_SIMO[0]/I2C1_SDA/**GP5[6]**/BOOT[6]	14	N5	I/O	IPU	SPI1, I2C1, BOOT	
SPI1_SOMI[0]/I2C1_SCL/**GP5[5]**/BOOT[5]	13	P5	I/O	IPU		
$\overline{\text{SPI0_SCS[0]}}$/$\overline{\text{UART0_RTS}}$/EQEP0B/**GP5[4]**/BOOT[4]	9	N4	I	IPU	SPI0, UART0, eQEP0, BOOT	
$\overline{\text{SPI0_ENA}}$/$\overline{\text{UART0_CTS}}$/EQEP0A/**GP5[3]**/BOOT[3]	12	R5	I	IPU		
SPI0_CLK/EQEP1I/**GP5[2]**/BOOT[2]	11	T5	I	IPD	SPI0, eQEP1, BOOT	
SPI0_SIMO[0]/EQEP0S/**GP5[1]**/BOOT[1]	18	P6	I	IPD	SPI0, eQEP0, BOOT	
SPI0_SOMI[0]/EQEP0I/**GP5[0]**/BOOT[0]	17	R6	I	IPD		

Copyright © 2008–2014, Texas Instruments Incorporated

Table 3-25. General Purpose Input Output Terminal Functions (continued)

SIGNAL NAME	PIN NO		TYPE(1)	PULL(2)	MUXED	DESCRIPTION
	PTP	ZKB				
GP6						
EMB_D[15]/**GP6[15]**	74	F13	I/O	IPD	EMIFB	GPIO Bank 6
EMB_D[14]/**GP6[14]**	76	E`6	I/O	IPD		
EMB_D[13]/**GP6[13]**	78	E13	I/O	IPD		
EMB_D[12]/**GP6[12]**	79	D16	I/O	IPD		
EMB_D[11]/**GP6[11]**	80	D15	I/O	IPD		
EMB_D[10]/**GP6[10]**	82	D14	I/O	IPD		
EMB_D[9]/**GP6[9]**	83	D13	I/O	IPD		
EMB_D[8]/**GP6[8]**	84	C16	I/O	IPD		
EMB_D[7]/**GP6[7]**	62	J16	I/O	IPD		
EMB_D[6]/**GP6[6]**	63	J15	I/O	IPD		
EMB_D[5]/**GP6[5]**	64	J13	I/O	IPD		
EMB_D[4]/**GP6[4]**	66	H16	I/O	IPD		
EMB_D[3]/**GP6[3]**	68	H13	I/O	IPD		
EMB_D[2]/**GP6[2]**	70	G16	I/O	IPD		
EMB_D[1]/**GP6[1]**	72	G13	I/O	IPD		
EMB_D[0]/**GP6[0]**	73	F16	I/O	IPD		
GP7						
EMU[0]/**GP7[15]**	-	J5	I/O	IPU	JTAG	
RTCK/ **GP7[14]** (3)	157	K1	I/O	IPD		General-Purpose IO signal
EMB_A[11]/**GP7[13]**	91	B12	O	IPD	EMIFB	GPIO Bank 7
EMB_A[10]/**GP7[12]**	105	A9	O	IPD		
EMB_A[9]/**GP7[11]**	92	C12	O	IPD		
EMB_A[8]/**GP7[10]**	94	D12	O	IPD		
EMB_A[7]/**GP7[9]**	95	A11	O	IPD		
EMB_A[6]/**GP7[8]**	96	B11	O	IPD		
EMB_A[5]/**GP7[7]**	97	C11	O	IPD		
EMB_A[4]/**GP7[6]**	98	D11	O	IPD		
EMB_A[3]/**GP7[5]**	100	A10	O	IPD		
EMB_A[2]/**GP7[4]**	101	B10	O	IPD		
EMB_A[1]/**GP7[3]**	102	C10	O	IPD		
EMB_A[0]/**GP7[2]**	103	D10	O	IPD		
EMB_BA[0]/**GP7[1]**	107	C9	O	IPU		
EMB_BA[1]/**GP7[0]**	106	B9	O	IPU		

(3) GP7[14] is initially configured as a reserved function after reset and will not be in a predictable state. This signal will only be stable after the GPIO configuration for this pin has been completed. Users should carefully consider the system implications of this pin being in an unknown state after reset.

3.6.21 Reserved and No Connect

Table 3-26. Reserved and No Connect Terminal Functions

SIGNAL NAME	PIN NO		TYPE(1)	DESCRIPTION
	PTP	ZKB		
RSV1	-	F7	-	Reserved. (Leave unconnected, ***do not*** connect to power or ground.)

(1) PWR = Supply voltage.

Copyright © 2008–2014, Texas Instruments Incorporated

Table 3-26. Reserved and No Connect Terminal Functions (continued)

SIGNAL NAME	PIN NO		TYPE(1)	DESCRIPTION
	PTP	ZKB		
RSV2	133	B1	PWR	Reserved. For proper device operation, this pin **must** be tied either directly to CVDD or left unconnected [*do not* connect to ground (VSS)].
RSV3	149	-	PWR	Reserved. For proper device operation, this pin **must** be tied directly to CV_{DD}.
RSV4	148	-	I	Reserved. For proper device operation, this pin must be tied low or to CVDD.
NC	136	F3	-	No Connect (leave unconnected)
NC	139	H4	-	No Connect (leave unconnected)

Copyright © 2008–2014, Texas Instruments Incorporated

3.6.22 Supply and Ground

Table 3-27. Supply and Ground Terminal Functions

SIGNAL NAME	PIN NO		TYPE(1)	DESCRIPTION
	PTP	ZKB		
CVDD (Core supply)	10, 20, 28, 38, 50, 56, 61, 69, 77, 93, 104, 114, 147, 154, 161, 167	F6,G6, G7, G10, G11, H7, H10, H11, J6, J7, J10, J11, J12, K6, K7, K10, K11,L6	PWR	Core supply voltage pins
RVDD (Internal RAM supply)	67, 159	H6, H12	PWR	Internal ram supply voltage pins
DVDD (I/O supply)	5, 15, 24, 33, 43, 47, 53, 58, 65, 71, 75, 81, 87, 90, 99, 109, 119, 128, 151, 158, 164, 172	B16, E5, E8, E9, E12, F5, F11, F12, G5, G12, K5, K12, L5, L11, L12, M5, M8, M9, M12, R1, R16	PWR	I/O supply voltage pins
VSS (Ground)	177	A1, A2, A15, A16, B2, E6, E7, E10, E11, F8, F9, F10, G8, G9, H8, H9, J8, J9, K8, K9, L7, L8, L9, L10, M6, M7, M10, M11, T1, T2, T15, T16	GND	Ground pins

(1) PWR = Supply voltage, GND - Ground.

Copyright © 2008–2014, Texas Instruments Incorporated

3.6.23 Unused USB0 (USB2.0) and USB1 (USB1.1) Pin Configurations

If one or both USB modules on the device are not used, then some of the power supplies to those modules may not be required. This can eliminate the requirement for a 1.8V power supply to the USB modules. The required pin configurations for unused USB modules are shown below.

Table 3-28. Unused USB0 and USB1 Pin Configurations

SIGNAL NAME	Configuration (When USB0 and USB1 are not used)	Configuration (When USB0 is used and USB1 is not used)
USB0_DM	No connect	Use as USB0 function
USB0_DP	No connect	Use as USB0 function
USB0_VDDA33	No connect	3.3V
USB0_VDDA18	No connect	1.8V
USB0_ID	No connect	Use as USB0 function
USB0_VBUS	No connect	Use as USB0 function
USB0_DRVVBUS/GP4[15]	No connect or use as alternate function	Use as USB0 or alternate function
USB0_VDDA12	Internal USB0 PHY output connected to an external 0.22μF filter capacitor	
USB1_DM	No connect	VSS
USB1_DP	No connect	VSS
USB1_VDDA33	No connect	No connect
USB1_VDDA18	No connect	No connect
AHCLKX0/AHCLKX2/USB_REFCLKIN/ GP2[11]	No connect or use as alternate function	Use as USB0 or alternate function

Copyright © 2008–2014, Texas Instruments Incorporated

4 Device Configuration

4.1 Boot Modes

This device supports a variety of boot modes through an internal ROM bootloader. This device does not support dedicated hardware boot modes; therefore, all boot modes utilize the internal ROM. The input states of the BOOT pins are sampled and latched into the BOOTCFG register, which is part of the system configuration (SYSCFG) module, when device reset is deasserted. Boot mode selection is determined by the values of the BOOT pins.

The following boot modes are supported:

- NAND Flash boot
  - 8-bit NAND
  - 16-bit NAND
- NOR Flash boot
  - NOR Direct boot (8-bit or 16-bit)
  - NOR Legacy boot (8-bit or 16-bit)
  - NOR AIS boot (8-bit or 16-bit)
- HPI Boot [C6747 only]
- I2C0 / I2C1 Boot
  - EEPROM (Master Mode)
  - External Host (Slave Mode)
- SPI0 / SPI1 Boot
  - Serial Flash (Master Mode)
  - SERIAL EEPROM (Master Mode)
  - External Host (Slave Mode)
- UART0 / UART1 / UART2 Boot
  - External Host

Copyright © 2008–2014, Texas Instruments Incorporated

4.2 SYSCFG Module

The following system level features of the chip are controlled by the SYSCFG peripheral:

- Readable Device, Die, and Chip Revision ID
- Control of Pin Multiplexing
- Priority of bus accesses different bus masters in the system
- Capture at power on reset the chip BOOT[15:0] pin values and make them available to software
- Special case settings for peripherals:
  - Locking of PLL controller settings
  - Default burst sizes for EDMA3 TC0 and TC1
  - Selection of the source for the eCAP module input capture (including on chip sources)
  - McASP AMUTEIN selection and clearing of AMUTE status for the three McASP peripherals
  - Control of the reference clock source and other side-band signals for both of the integrated USB PHYs
  - Clock source selection for EMIFA and EMIFB
- Selects the source of emulation suspend signal (from DSP) of peripherals supporting this function.

Many registers are accessible only by a host (DSP) when it is operating in its privileged mode. (ex. from the kernel, but not from user space code).

Table 4-1. System Configuration (SYSCFG) Module Register Access

BYTE ADDRESS	ACRONYM	REGISTER DESCRIPTION	ACCESS
0x01C1 4000	REVID	Revision Identification Register	—
0x01C14008	DIEIDR0	Device Identification Register 0	—
0x01C1 400C	DIEIDR1	Device Identification Register 1	—
0x01C1 4010	DIEIDR2	Device Identification Register 2	—
0x01C1 4014	DIEIDR3	Device Identification Register 3	—
0x01C1 4018	DEVIDR0	JTAG Identification Register	—
0x01C1 4020	BOOTCFG	Boot Configuration Register	Privileged mode
0x01C1 4024	CHIPREVID	Silicon Revision Identification Register	Privileged mode
0x01C1 4038	KICK0R	Kick 0 Register	Privileged mode
0x01C1 403C	KICK1R	Kick 1 Register	Privileged mode
0x01C1 4040	HOST0CFG	Host 0 Configuration Register	—
0x01C1 4044	HOST1CFG	Host 1 Configuration Register	—
0x01C1 40E0	IRAWSTAT	Interrupt Raw Status/Set Register	Privileged mode
0x01C1 40E4	IENSTAT	Interrupt Enable Status/Clear Register	Privileged mode
0x01C1 40E8	IENSET	Interrupt Enable Register	Privileged mode
0x01C1 40EC	IENCLR	Interrupt Enable Clear Register	Privileged mode
0x01C1 40F0	EOI	End of Interrupt Register	Privileged mode
0x01C1 40F4	FLTADDRR	Fault Address Register	Privileged mode
0x01C1 40F8	FLTSTAT	Fault Status Register	—
0x01C1 4110	MSTPRI0	Master Priority 0 Register	Privileged mode
0x01C1 4114	MSTPRI1	Master Priority 1 Register	Privileged mode
0x01C1 4118	MSTPRI2	Master Priority 2 Register	Privileged mode
0x01C1 4120	PINMUX0	Pin Multiplexing Control 0 Register	Privileged mode
0x01C1 4124	PINMUX1	Pin Multiplexing Control 1 Register	Privileged mode
0x01C1 4128	PINMUX2	Pin Multiplexing Control 2 Register	Privileged mode
0x01C1 412C	PINMUX3	Pin Multiplexing Control 3 Register	Privileged mode
0x01C1 4130	PINMUX4	Pin Multiplexing Control 4 Register	Privileged mode
0x01C1 4134	PINMUX5	Pin Multiplexing Control 5 Register	Privileged mode

Copyright © 2008–2014, Texas Instruments Incorporated

Table 4-1. System Configuration (SYSCFG) Module Register Access (continued)

BYTE ADDRESS	ACRONYM	REGISTER DESCRIPTION	ACCESS
0x01C1 4138	PINMUX6	Pin Multiplexing Control 6 Register	Privileged mode
0x01C1 413C	PINMUX7	Pin Multiplexing Control 7 Register	Privileged mode
0x01C1 4140	PINMUX8	Pin Multiplexing Control 8 Register	Privileged mode
0x01C1 4144	PINMUX9	Pin Multiplexing Control 9 Register	Privileged mode
0x01C1 4148	PINMUX10	Pin Multiplexing Control 10 Register	Privileged mode
0x01C1 414C	PINMUX11	Pin Multiplexing Control 11 Register	Privileged mode
0x01C1 4150	PINMUX12	Pin Multiplexing Control 12 Register	Privileged mode
0x01C1 4154	PINMUX13	Pin Multiplexing Control 13 Register	Privileged mode
0x01C1 4158	PINMUX14	Pin Multiplexing Control 14 Register	Privileged mode
0x01C1 415C	PINMUX15	Pin Multiplexing Control 15 Register	Privileged mode
0x01C1 4160	PINMUX16	Pin Multiplexing Control 16 Register	Privileged mode
0x01C1 4164	PINMUX17	Pin Multiplexing Control 17 Register	Privileged mode
0x01C1 4168	PINMUX18	Pin Multiplexing Control 18 Register	Privileged mode
0x01C1 416C	PINMUX19	Pin Multiplexing Control 19 Register	Privileged mode
0x01C1 4170	SUSPSRC	Suspend Source Register	Privileged mode
0x01C1 4174	CHIPSIG	Chip Signal Register	—
0x01C1 4178	CHIPSIG_CLR	Chip Signal Clear Register	—
0x01C1 417C	CFGCHIP0	Chip Configuration 0 Register	Privileged mode
0x01C1 4180	CFGCHIP1	Chip Configuration 1 Register	Privileged mode
0x01C1 4184	CFGCHIP2	Chip Configuration 2 Register	Privileged mode
0x01C1 4188	CFGCHIP3	Chip Configuration 3 Register	Privileged mode
0x01C1 418C	CFGCHIP4	Chip Configuration 4 Register	Privileged mode

Copyright © 2008–2014, Texas Instruments Incorporated

4.3 Pullup/Pulldown Resistors

Proper board design should ensure that input pins to the device always be at a valid logic level and not floating. This may be achieved via pullup/pulldown resistors. The device features internal pullup (IPU) and internal pulldown (IPD) resistors on most pins to eliminate the need, unless otherwise noted, for external pullup/pulldown resistors.

An external pullup/pulldown resistor needs to be used in the following situations:

- Boot and Configuration Pins: If the pin is both routed out and 3-stated (not driven), an external pullup/pulldown resistor is strongly recommended, even if the IPU/IPD matches the desired value/state.
- Other Input Pins: If the IPU/IPD does not match the desired value/state, use an external pullup/pulldown resistor to pull the signal to the opposite rail.

For the boot and configuration pins, if they are both routed out and 3-stated (not driven), it is strongly recommended that an external pullup/pulldown resistor be implemented. Although, internal pullup/pulldown resistors exist on these pins and they may match the desired configuration value, providing external connectivity can help ensure that valid logic levels are latched on these device boot and configuration pins. In addition, applying external pullup/pulldown resistors on the boot and configuration pins adds convenience to the user in debugging and flexibility in switching operating modes.

Tips for choosing an external pullup/pulldown resistor:

- Consider the total amount of current that may pass through the pullup or pulldown resistor. Make sure to include the leakage currents of all the devices connected to the net, as well as any internal pullup or pulldown resistors.
- Decide a target value for the net. For a pulldown resistor, this should be below the lowest V_{IL} level of all inputs connected to the net. For a pullup resistor, this should be above the highest V_{IH} level of all inputs on the net. A reasonable choice would be to target the V_{OL} or V_{OH} levels for the logic family of the limiting device; which, by definition, have margin to the V_{IL} and V_{IH} levels.
- Select a pullup/pulldown resistor with the largest possible value; but, which can still ensure that the net will reach the target pulled value when maximum current from all devices on the net is flowing through the resistor. The current to be considered includes leakage current plus, any other internal and external pullup/pulldown resistors on the net.
- For bidirectional nets, there is an additional consideration which sets a lower limit on the resistance value of the external resistor. Verify that the resistance is small enough that the weakest output buffer can drive the net to the opposite logic level (including margin).
- Remember to include tolerances when selecting the resistor value.
- For pullup resistors, also remember to include tolerances on the IO supply rail.
- For most systems, a 1-kΩ resistor can be used to oppose the IPU/IPD while meeting the above criteria. Users should confirm this resistor value is correct for their specific application.
- For most systems, a 20-kΩ resistor can be used to compliment the IPU/IPD on the boot and configuration pins while meeting the above criteria. Users should confirm this resistor value is correct for their specific application.
- For more detailed information on input current (I_I), and the low-/high-level input voltages (V_{IL} and V_{IH}) for the device, see Section 5.3, Recommended Operating Conditions.
- For the internal pullup/pulldown resistors for all device pins, see the peripheral/system-specific terminal functions table.

Copyright © 2008–2014, Texas Instruments Incorporated

5 Device Operating Conditions

5.1 Absolute Maximum Ratings Over Operating Case Temperature Range (Unless Otherwise Noted) (1)

Supply voltage ranges	Core (CVDD, RVDD, RTC_CVDD, PLL0_VDDA) (2)	-0.5 V to 1.4 V
	I/O, 1.8V (USB0_VDDA18, USB1_VDDA18) (2)	-0.5 V to 2 V
	I/O, 3.3V (DVDD, USB0_VDDA33, USB1_VDDA33) (2)	-0.5 V to 3.8V
Input voltage ranges	V_I I/O, 1.2V (OSCIN, RTC_XI)	-0.3 V to CVDD + 0.3V
	V_I I/O, 3.3V (Steady State)	-0.3V to DVDD + 0.35V
	V_I I/O, 3.3V (Transient)	DVDD + 20% up to 20% of Signal Period
	V_I I/O, USB 5V Tolerant Pins: (USB0_DM, USB0_DP, USB0_ID, USB1_DM, USB1_DP)	5.25V(3)
	V_I I/O, USB0 VBUS	5.50V(3)
Output voltage ranges	V_O I/O, 3.3V (Steady State)	-0.5 V to DVDD + 0.3V
	V_O I/O, 3.3V (Transient Overshoot/Undershoot)	20% of DVDD for up to 20% of the signal period
Clamp Current	Input or Output Voltages 0.3V above or below their respective power rails. Limit clamp current that flows through the I/O's internal diode protection cells.	±20mA
Operating Junction Temperature ranges, T_J	Commercial	0°C to 90°C
	Industrial (D suffix)	-40°C to 90°C
	Extended (A suffix)	-40°C to 105°C
	Automotive (T suffix)	-40°C to 125°C

(1) Stresses beyond those listed under "absolute maximum ratings" may cause permanent damage to the device. These are stress ratings only, and functional operation of the device at these or any other conditions beyond those indicated under "recommended operating conditions" is not implied. Exposure to absolute-maximum-rated conditions for extended periods may affect device reliability.
(2) All voltage values are with respect to VSS, PLL0_VSSA, OSCVSS, RTC_VSS
(3) Up to a max of 24 hours.

5.2 Handling Ratings

			UNIT
Storage temperature range, T_{stg}	(default)	-55 to 150	°C
ESD Stress Voltage, V_{ESD} (1)	Human Body Model (HBM) (2)	>2000	V
	Charged Device Model (CDM) (3)	>500	V

(1) Electrostatic discharge (ESD) to measure device sensitivity/immunity to damage caused by electrostatic discharges into the device.
(2) Level listed above is the passing level per ANSI/ESDA/JEDEC JS-001-2010. JEDEC document JEP155 states that 500V HBM allows safe manufacturing with a standard ESD control process, and manufacturing with less than 500V HBM is possible if necessary precautions are taken. Pins listed as 1000V may actually have higher performance.
(3) Level listed above is the passing level per EIA-JEDEC JESD22-C101E. JEDEC document JEP157 states that 250V CDM allows safe manufacturing with a standard ESD control process. Pins listed as 250V may actually have higher performance.

Copyright © 2008–2014, Texas Instruments Incorporated

5.3 Recommended Operating Conditions

			MIN	NOM	MAX	UNIT
CVDD	Supply voltage, Core (CVDD, PLL0_VDDA)	375 MHz versions	1.14	1.2	1.32	V
		456 MHz version	1.25	1.3	1.35	
RTC_CVDD (1)	Supply Voltage, RTC Core Logic	375 MHz versions	0.9	1.2	1.32	V
		456 MHz version	0.9	1.3	1.35	
RVDD	Supply Voltage, Internal RAM	375 MHz versions	1.14	1.2	1.32	V
		456 MHz version	1.25	1.3	1.35	
DVDD	Supply voltage, I/O, 1.8V (USB0_VDDA18, USB1_VDDA18)		1.71	1.8	1.89	V
	Supply voltage, I/O, 3.3V (DVDD, USB0_VDDA33, USB1_VDDA33)		3.0	3.3	3.45	V
VSS	Supply ground (VSS, PLL0_VSSA, OSCVSS(2), RTC_VSS(2))		0	0	0	V
V_{IH} (3)	High-level input voltage, I/O, 3.3V		2			V
	High-level input voltage, RTC_XI		0.7*RTC_CVDD			V
	High-level input voltage, OSCIN		0.7*CVDD			
V_{IL} (3)	Low-level input voltage, I/O, 3.3V				0.8	V
	Low-level input voltage, RTC_XI				0.3*RTC_CVDD	V
	Low-level input voltage, OSCIN				0.3*CVDD	
V_{HYS}	Input Hysteresis			160		mV
USB	USB0_VBUS		4.75	5	5.25	V
t_t	Transition time, 10%-90%, All Inputs (unless otherwise specified in the electrical data sections)				0.25P or 10(4)	ns
T_A	Operating ambient temperature range	Commercial	0		70	°C
		Industrial (D suffix)	-40		70	°C
		Extended (A suffix)	-40		85	°C
		Automotive (T suffix)	-40		105	°C
$F_{SYSCLK1,6}$	DSP Operating Frequency (SYSCLK1)	Commercial	0		375 / 456	MHz
		Industrial (D suffix)	0		456	MHz
		Extended (A suffix)	0		375	MHz
		Automotive (T suffix)	0		375	MHz

(1) The RTC provides an option for isolating the RTC_CVDD from the CVDD to reduce current leakage when the RTC is powered independently. If these power supplies are not isolated (CTRL.SPLITPOWER=0), RTC_CVDD must be equal to or greater than CVDD. If these power supplies are isolated (CTRL.SPLITPOWER=1), RTC_CVDD may be lower than CVDD.
(2) When an external crystal is used, oscillator (OSC_VSS, RTC_VSS) ground must be kept separate from other grounds and connected directly to the crystal load capacitor ground. These pins are shorted to VSS on the device itself and should not be connected to VSS on the circuit board. If a crystal is not used and the clock input is driven directly, then the oscillator VSS may be connected to board ground.
(3) Unless specifically indicated, these I/O specifications do not apply to USB I/Os. USB0 I/Os adhere to USB2.0 specification. USB1 I/Os adhere to USB1.1 specification.
(4) Whichever is smaller. P = the period of the applied signal. Maintaining transition times as fast as possible is recommended to improve noise immunity on input signals.

Copyright © 2008–2014, Texas Instruments Incorporated

5.4 Notes on Recommended Power-On Hours (POH)

The information in the section below is provided solely for your convenience and does not extend or modify the warranty provided under TI's standard terms and conditions for TI semiconductor products.

To avoid significant degradation, the device power-on hours (POH) must be limited to the following:

Table 5-1. Recommended Power-On Hours

Silicon Revision	Speed Grade	Operating Junction Temperature (Tj)	Nominal CVDD Voltage (V)	Power-On Hours [POH] (hours)
D	300 MHz	0 to 90 °C	1.2V	100,000
D	300 MHz	0 to 90 °C	1.2V	100,000
D	375 MHz	0 to 90 °C	1.2V	100,000
D	375 MHz	-40 to 105 °C	1.2V	75,000 (1)
D	375 MHz	-40 to 125 °C	1.2V	20,000
D	456 MHz	0 to 90 °C	1.3V	100,000
D	456 MHz	-40 to 90 °C	1.3V	100,000

(1) 100,000 POH can be achieved at this temperature condition if the device operation is limited to 345 MHz.

Note: Logic functions and parameter values are not assured out of the range specified in the recommended operating conditions.

The above notations cannot be deemed a warranty or deemed to extend or modify the warranty under TI's standard terms and conditions for TI semiconductor products.

Copyright © 2008–2014, Texas Instruments Incorporated

5.5 Electrical Characteristics Over Recommended Ranges of Supply Voltage and Operating Case Temperature (Unless Otherwise Noted)

PARAMETER		TEST CONDITIONS	MIN	TYP	MAX	UNIT
V_{OH} (1)	High-level output voltage (3.3V I/O)	DVDD= 3.15V, I_{OH} = -4 mA	2.4			V
		DVDD= 3.15V, I_{OH} = 100 µA	2.95			V
V_{OL} (1)	Low-level output voltage (3.3V I/O)	DVDD= 3.15V, I_{OL} = 4mA			0.4	V
		DVDD= 3.15V, I_{OL} = -100 µA			0.2	V
I_I (2), (1)	Input current	V_I = VSS to DVDD without opposing internal resistor			±35	µA
		V_I = VSS to DVDD with opposing internal pullup resistor (3)	-30		-200	µA
		V_I = VSS to DVDD with opposing internal pulldown resistor (3)	50		300	µA
		V_I = VSS to USB1_VDDA33 - USB1_DM and USB1_DP			±40	µA
I_{OH} (1)	High-level output current				-4	mA
I_{OL} (1)	Low-level output current				4	mA
I_{OZ} (4)	I/O Off-state output current	VO = VDD or VSS; Internal pull disabled			±35	µA
C_I	Input capacitance	LVCMOS signals			3	pF
		OSCIN and RTC_XI			2	pF
C_O	Output capacitance	LVCMOS signals			3	pF

(1) These I/O specifications apply to regular 3.3V IOs and do not apply to USB0 or USB1 unless specifically indicated. USB0 I/Os adhere to the USB 2.0 specification. USB1 I/Os adhere to the USB 1.1 specification.
(2) I_I applies to input-only pins and bi-directional pins. For input-only pins, I_I indicates the input leakage current. For bi-directional pins, I_I indicates the input leakage current and off-state (Hi-Z) output leakage current.
(3) Applies only to pins with an internal pullup (IPU) or pulldown (IPD) resistor.
(4) I_{OZ} applies to output-only pins, indicating off-state (Hi-Z) output leakage current.

Copyright © 2008–2014, Texas Instruments Incorporated

6 Peripheral Information and Electrical Specifications

6.1 Parameter Information

6.1.1 Parameter Information Device-Specific Information

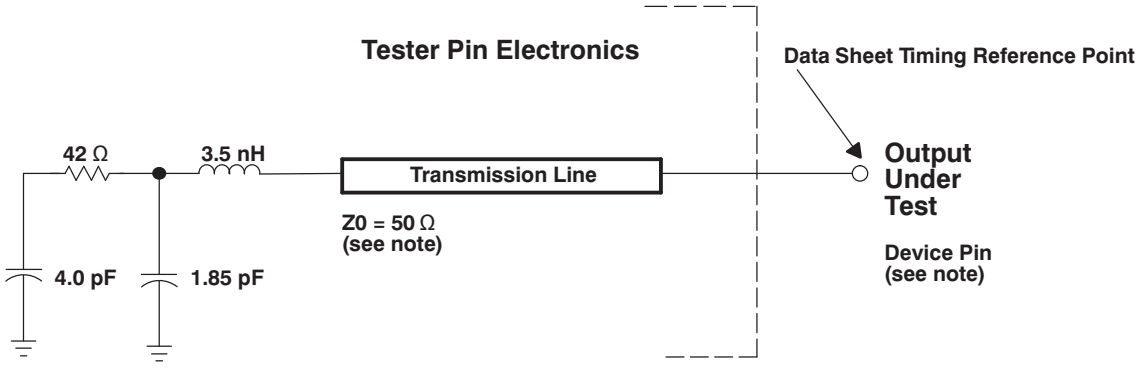

A. The data sheet provides timing at the device pin. For output timing analysis, the tester pin electronics and its transmission line effects must be taken into account. A transmission line with a delay of 2 ns or longer can be used to produce the desired transmission line effect. The transmission line is intended as a load only. It is not necessary to add or subtract the transmission line delay (2 ns or longer) from the data sheet timings.
Input requirements in this data sheet are tested with an input slew rate of < 4 Volts per nanosecond (4 V/ns) at the device pin and the input signals are driven between 0V and the appropriate IO supply rail for the signal.

Figure 6-1. Test Load Circuit for AC Timing Measurements

The load capacitance value stated is only for characterization and measurement of AC timing signals. This load capacitance value does not indicate the maximum load the device is capable of driving.

6.1.1.1 Signal Transition Levels

All input and output timing parameters are referenced to V_{ref} for both "0" and "1" logic levels. For 3.3 V I/O, V_{ref} = 1.65 V. For 1.8 V I/O, V_{ref} = 0.9 V. For 1.2 V I/O, V_{ref} = 0.6 V.

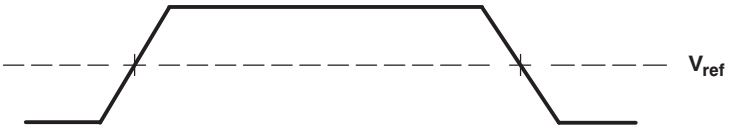

Figure 6-2. Input and Output Voltage Reference Levels for AC Timing Measurements

All rise and fall transition timing parameters are referenced to V_{IL} MAX and V_{IH} MIN for input clocks, V_{OL}MAX and V_{OH} MIN for output clocks.

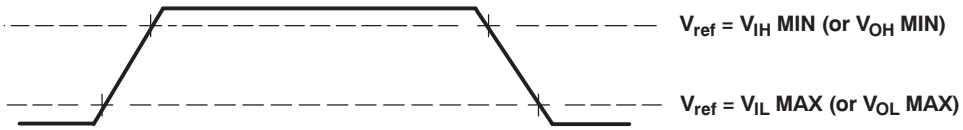

Figure 6-3. Rise and Fall Transition Time Voltage Reference Levels

Copyright © 2008–2014, Texas Instruments Incorporated

6.2 Recommended Clock and Control Signal Transition Behavior

All clocks and control signals ***must*** transition between V_{IH} and V_{IL} (or between V_{IL} and V_{IH}) in a monotonic manner.

6.3 Power Supplies

6.3.1 Power-on Sequence

The device should be powered-on in the following order:

1. RTC (RTC_CVDD) may be powered from an external device (such as a battery) prior to all other supplies being applied or powered-up at the same time as CVDD. If the RTC is not used, RTC_CVDD should be connected to CVDD. RTC_CVDD should not be left unpowered while CVDD is powered.
2. Core logic supplies:
   a. CVDD core logic and RVDD supply
   b. Other 1.2V logic supplies (PLL0_VDDA).

   Groups 2a) and 2b) may be powered up together or 2a) first followed by 2b).
3. All 1.8V IO supplies (USB0_VDDA18, USB1_VDDA18).
4. All digital IO and analog 3.3V PHY supplies (DVDD, USB0_VDDA33, USB1_VDDA33).
   If **both** USB0 and USB1 are not used, USB0_VDDA33 and USB1_VDDA33 are not required and may be left unconnected.

Group 3) and group 4) may be powered on in either order [3 then 4, or 4 then 3] but group 4) must be powered-on after the core logic supplies.

There is no specific required voltage ramp rate for any of the supplies.

RESET must be maintained active until all power supplies have reached their nominal values.

6.3.2 Power-off Sequence

The power supplies can be powered-off in any order as long as the 3.3V supplies do not remain powered with the other supplies unpowered.

Copyright © 2008–2014, Texas Instruments Incorporated

6.4 Reset

6.4.1 Power-On Reset (POR)

A power-on reset (POR) is required to place the device in a known good state after power-up. Power-On Reset is initiated by bringing $\overline{\text{RESET}}$ and $\overline{\text{TRST}}$ low at the same time. POR sets all of the device internal logic to its default state. All pins are tri-stated with the exception of $\overline{\text{RESETOUT}}$, which remains active through the reset sequence, and GP7[14]. During reset, GP7[14] is configured as a reserved function, and its behavior is not deterministic; the user should be aware that this pin will drive a level, and in fact may toggle, during reset. $\overline{\text{RESETOUT}}$ is an output for use by other controllers in the system that indicates the device is currently in reset.

While both $\overline{\text{TRST}}$ and $\overline{\text{RESET}}$ need to be asserted upon power up, only $\overline{\text{RESET}}$ needs to be released for the device to boot properly. $\overline{\text{TRST}}$ may be asserted indefinitely for normal operation, keeping the JTAG port interface and device's emulation logic in the reset state.

$\overline{\text{TRST}}$ only needs to be released when it is necessary to use a JTAG controller to debug the device or exercise the device's boundary scan functionality. Note: $\overline{\text{TRST}}$ is synchronous and must be clocked by TCK; otherwise, the boundary scan logic may not respond as expected after $\overline{\text{TRST}}$ is asserted.

$\overline{\text{RESET}}$ must be released only in order for boundary-scan JTAG to read the variant field of IDCODE correctly. Other boundary-scan instructions work correctly independent of current state of $\overline{\text{RESET}}$. For maximum reliability, the device includes an internal pulldown on the $\overline{\text{TRST}}$ pin to ensure that $\overline{\text{TRST}}$ will always be asserted upon power up and the device's internal emulation logic will always be properly initialized.

JTAG controllers from Texas Instruments actively drive $\overline{\text{TRST}}$ high. However, some third-party JTAG controllers may not drive $\overline{\text{TRST}}$ high but expect the use of a pullup resistor on $\overline{\text{TRST}}$. When using this type of JTAG controller, assert $\overline{\text{TRST}}$ to intialize the device after powerup and externally drive $\overline{\text{TRST}}$ high before attempting any emulation or boundary scan operations.

A summary of the effects of Power-On Reset is given below:

- All internal logic (including emulation logic and the PLL logic) is reset to its default state
- Internal memory is not maintained through a POR
- $\overline{\text{RESETOUT}}$ goes active
- All device pins go to a high-impedance state
- The RTC peripheral is not reset during a POR. A software sequence is required to reset the RTC.

CAUTION: A watchdog reset triggers a POR.

6.4.2 Warm Reset

A warm reset provides a limited reset to the device. Warm Reset is initiated by bringing only $\overline{\text{RESET}}$ low ($\overline{\text{TRST}}$ is maintained high through a warm reset). Warm reset sets certain portions of the device to their default state while leaving others unaltered. All pins are tri-stated with the exception of $\overline{\text{RESETOUT}}$, which remains active through the reset sequence, and GP7[14]. During reset, GP7[14] is configured as a reserved function, and its behavior is not deterministic; the user should be aware that this pin will drive a level, and in fact may toggle, during reset. $\overline{\text{RESETOUT}}$ is an output for use by other controllers in the system that indicates the device is currently in reset.

During emulation, the emulator will maintain $\overline{\text{TRST}}$ high and hence only warm reset (not POR) is available during emulation debug and development.

A summary of the effects of Warm Reset is given below:

- All internal logic (except for the emulation logic and the PLL logic) is reset to its default state
- Internal memory is maintained through a warm reset
- $\overline{\text{RESETOUT}}$ goes active
- All device pins go to a high-impedance state

Copyright © 2008–2014, Texas Instruments Incorporated

- The RTC peripheral is not reset during a warm reset. A software sequence is required to reset the RTC.

6.4.3 Reset Electrical Data Timings

Table 6-1 assumes testing over the recommended operating conditions.

Table 6-1. Reset Timing Requirements(1)(2)

No.			MIN	MAX	UNIT
1	$t_{w(RSTL)}$	Pulse width, $\overline{RESET}$/$\overline{TRST}$ low	100		ns
2	$t_{su(BPV-RSTH)}$	Setup time, boot pins valid before $\overline{RESET}$/$\overline{TRST}$ high	20		ns
3	$t_{h(RSTH-BPV)}$	Hold time, boot pins valid after $\overline{RESET}$/$\overline{TRST}$ high	20		ns
4	$t_{d(RSTH-RESETOUTH)}$	$\overline{RESET}$ high to $\overline{RESETOUT}$ high; Warm reset	4096		cycles(3)
		$\overline{RESET}$ high to $\overline{RESETOUT}$ high; Power-on Reset	6192		

(1) $\overline{RESETOUT}$ is multiplexed with other pin functions. See the Terminal Functions table, Table 3-6 for details.
(2) For power-on reset (POR), the reset timings in this table refer to $\overline{RESET}$ and $\overline{TRST}$ together. For warm reset, the reset timings in this table refer to $\overline{RESET}$ only ($\overline{TRST}$ is held high).
(3) OSCIN cycles.

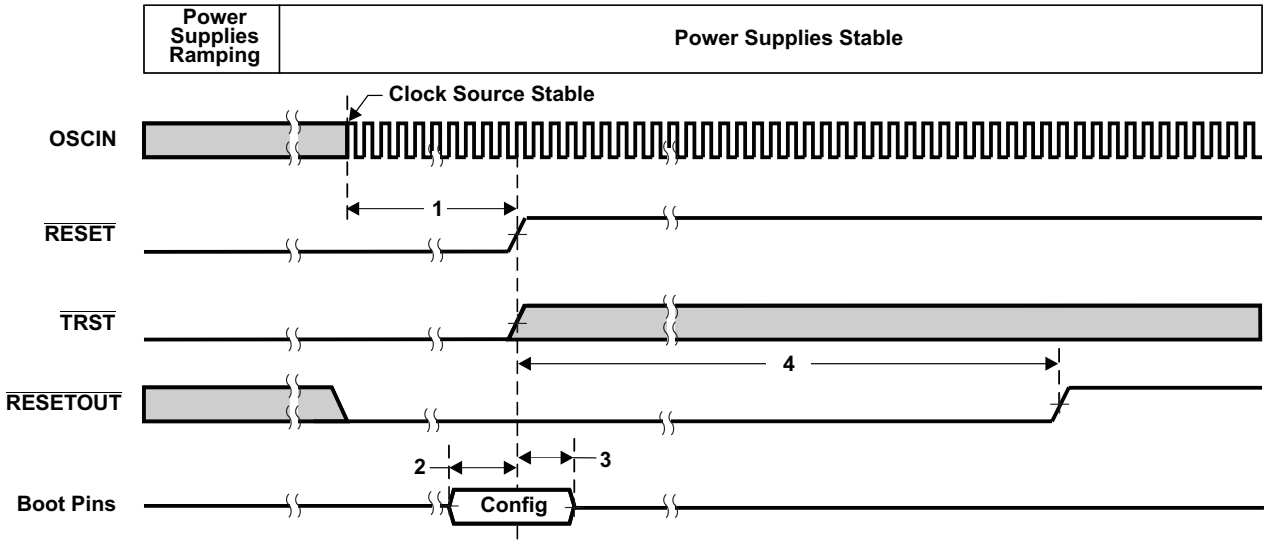

Figure 6-4. Power-On Reset ($\overline{RESET}$ and $\overline{TRST}$ active) Timing

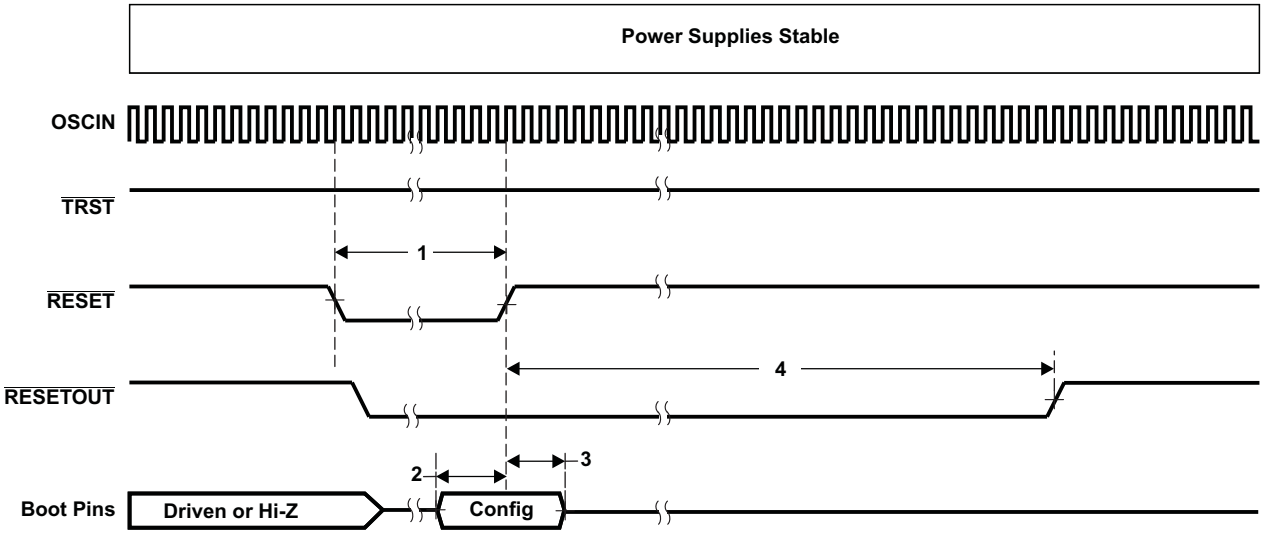

Figure 6-5. Warm Reset (RESET active, TRST high) Timing

Copyright © 2008–2014, Texas Instruments Incorporated

6.5 Crystal Oscillator or External Clock Input

The C6745/6747 device includes two choices to provide an external clock input, which is fed to the on-chip PLL to generate high-frequency system clocks. These options are illustrated in Figure 6-6 and Figure 6-7. For input clock frequencies between 12 and 20 MHz, a crystal with 80 ohm max ESR is recommended. For input clock frequencies between 20 and 30 MHz, a crystal with 60 ohm max ESR is recommended. Typical load capacitance values are 10-20 pF, where the load capacitance is the series combination of C1 and C2.

The CLKMODE bit in the PLLCTL register must be 0 to use the on-chip oscillator. If CLKMODE is set to 1, the internal oscillator is disabled.

- Figure 6-6 illustrates the option that uses on-chip 1.2V oscillator with external crystal circuit.
- Figure 6-7 illustrates the option that uses an external 1.2V clock input.

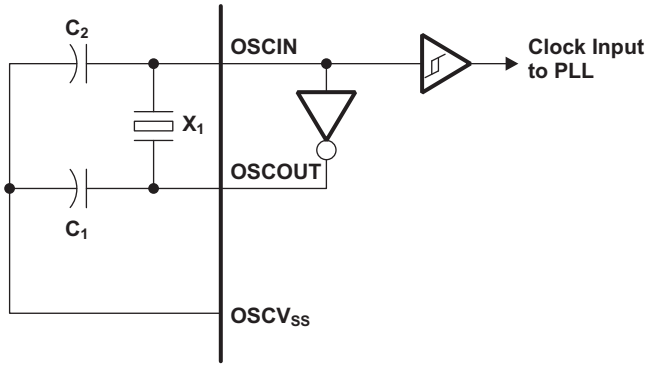

Figure 6-6. On-Chip 1.2V Oscillator

Table 6-2. Oscillator Timing Requirements

	PARAMETER	MIN	MAX	UNIT
f_{osc}	Oscillator frequency range (OSCIN/OSCOUT)	12	30	MHz

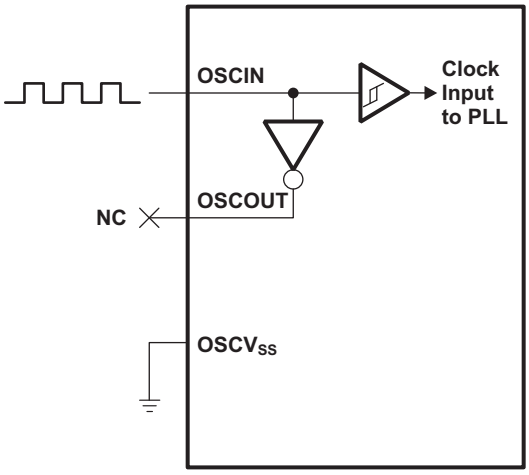

Figure 6-7. External 1.2V Clock Source

Table 6-3. OSCIN Timing Requirements

	PARAMETER	MIN	MAX	UNIT
f_{OSCIN}	OSCIN frequency range (OSCIN)	12	50	MHz
$t_{c(OSCIN)}$	Cycle time, external clock driven on OSCIN	20		ns
$t_{w(OSCINH)}$	Pulse width high, external clock on OSCIN	0.4 $t_{c(OSCIN)}$		ns
$t_{w(OSCINL)}$	Pulse width low, external clock on OSCIN	0.4 $t_{c(OSCIN)}$		ns
$t_{t(OSCIN)}$	Transition time, OSCIN		0.25P or 10 (1)	ns
$t_{j(OSCIN)}$	Period jitter, OSCIN		0.02P	ns

(1) Whichever is smaller. P = the period of the applied signal. Maintaining transition times as fast as possible is recommended to improve noise immunity on input signals.

Copyright © 2008–2014, Texas Instruments Incorporated

6.6 Clock PLLs

The C6745/6747 has one PLL controller that provides clock to different parts of the system. PLL0 provides clocks (though various dividers) to most of the components of the device.

The PLL controller provides the following:

- Glitch-Free Transitions (on changing clock settings)
- Domain Clocks Alignment
- Clock Gating
- PLL power down

The various clock outputs given by the controller are as follows:

- Domain Clocks: SYSCLK [1:n]
- Auxiliary Clock from reference clock source: AUXCLK

Various dividers that can be used are as follows:

- Post-PLL Divider: POSTDIV
- SYSCLK Divider: D1, ¼, Dn

Various other controls supported are as follows:

- PLL Multiplier Control: PLLM
- Software programmable PLL Bypass: PLLEN

6.6.1 PLL Device-Specific Information

The C6745/6747 DSP generates the high-frequency internal clocks it requires through an on-chip PLL.

The PLL requires some external filtering components to reduce power supply noise as shown in Figure 6-8.

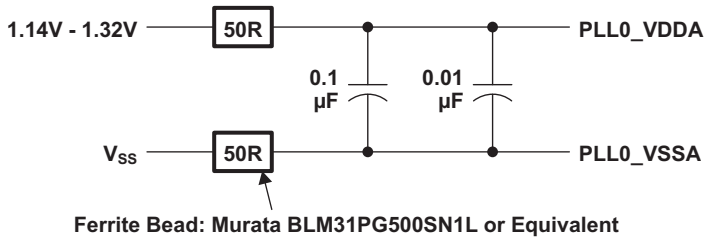

Figure 6-8. PLL External Filtering Components

The input to the PLL is either from the on-chip oscillator (OSCIN pin) or from an external clock on the OSCIN pin. The PLL outputs seven clocks that have programmable divider options. Figure 6-9 illustrates the PLL Topology.

The PLL is disabled by default after a device reset. It must be configured by software according to the allowable operating conditions listed in Table 6-4 before enabling the DSP to run from the PLL by setting PLLEN = 1.

Copyright © 2008–2014, Texas Instruments Incorporated

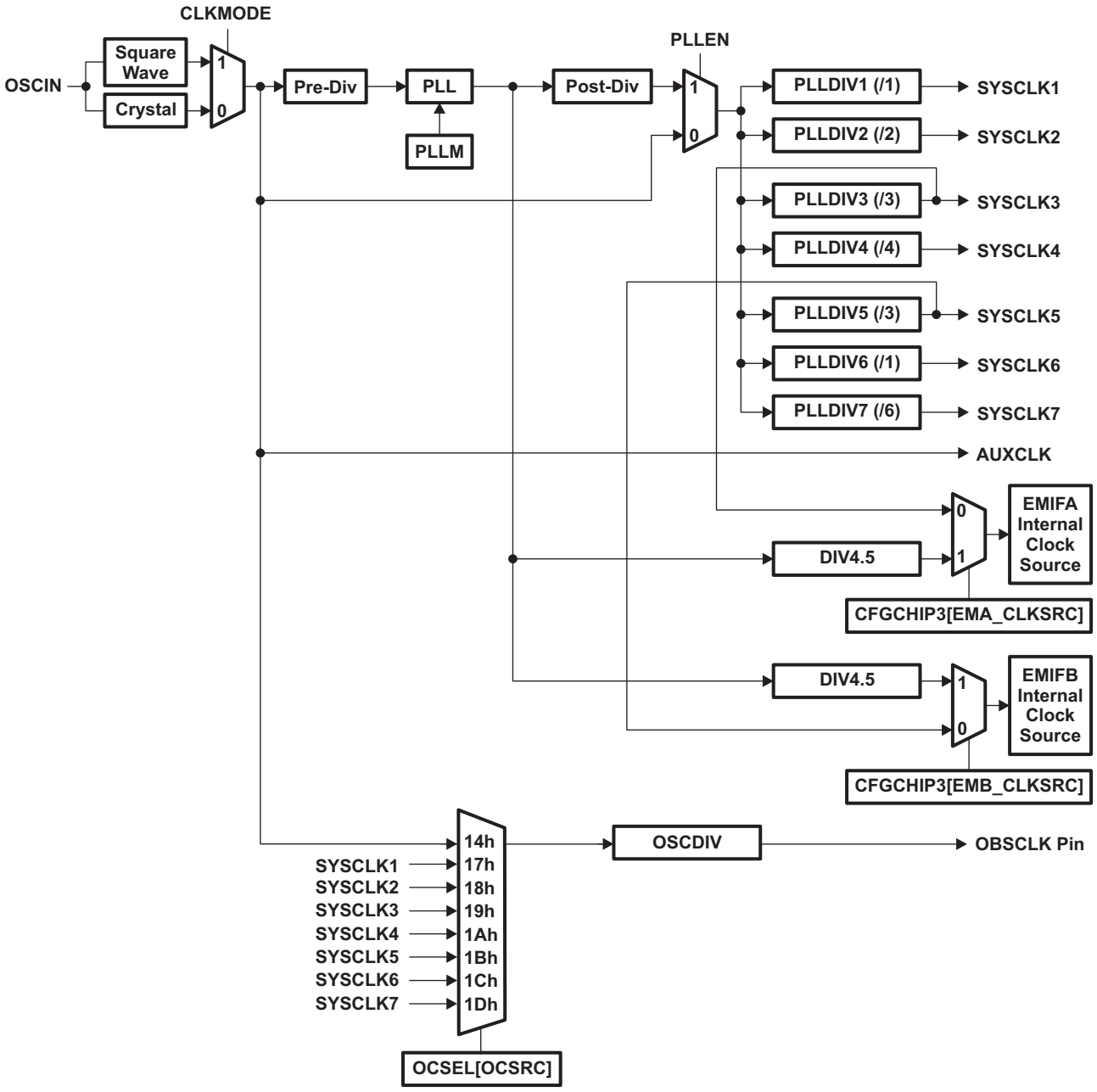

Figure 6-9. PLL Topology

Copyright © 2008–2014, Texas Instruments Incorporated

Table 6-4. Allowed PLL Operating Conditions

No.	PARAMETER	Default Value	MIN	MAX	UNIT
1	PLLRST: Assertion time during initialization	N/A	1000	N/A	ns
2	Lock time: The time that the application has to wait for the PLL to acquire locks before setting PLLEN, after changing PREDIV, PLLM, or OSCIN	N/A	N/A	Max PLL Lock Time = $\frac{2000\ N}{\sqrt{m}}$ where N = Pre-Divider Ratio M = PLL Multiplier	OSCIN cycles
3	PREDIV	/1	/1	/32	
4	PLL input frequency (PLLREF)		12	30 (if internal oscillator is used) 50 (if external clock source is used)	MHz
5	PLL multiplier values (PLLM) (1)	x20	x4	x32	
6	PLL output frequency. (PLLOUT)	N/A	300	600	MHz
7	POSTDIV	/1	/1	/32	

(1) The multiplier values must be chosen such that the PLL output frequency (at PLLOUT) is between 300 and 600 MHz, but the frequency going into the SYSCLK dividers (after the post divider) cannot exceed the maximum clock frequency defined for the device at a given voltage operating point.

6.6.2 Device Clock Generation

PLL0 is controlled by PLL Controller 0. The PLLC0 manages the clock ratios, alignment, and gating for the system clocks to the chip. The PLLC is responsible for controlling all modes of the PLL through software, in terms of pre-division of the clock inputs, multiply factor within the PLL, and post-division for each of the chip-level clocks from the PLL output. The PLLC also controls reset propagation through the chip, clock alignment, and test points.

Copyright © 2008–2014, Texas Instruments Incorporated

6.6.3 PLL Controller 0 Registers

Table 6-5. PLL Controller 0 Registers

BYTE ADDRESS	ACRONYM	REGISTER DESCRIPTION
0x01C1 1000	REVID	Revision Identification Register
0x01C1 10E4	RSTYPE	Reset Type Status Register
0x01C1 1100	PLLCTL	PLL Control Register
0x01C1 1104	OCSEL	OBSCLK Select Register
0x01C1 1110	PLLM	PLL Multiplier Control Register
0x01C1 1114	PREDIV	PLL Pre-Divider Control Register
0x01C1 1118	PLLDIV1	PLL Controller Divider 1 Register
0x01C1 111C	PLLDIV2	PLL Controller Divider 2 Register
0x01C1 1120	PLLDIV3	PLL Controller Divider 3 Register
0x01C1 1124	OSCDIV	Oscillator Divider 1 Register (OBSCLK)
0x01C1 1128	POSTDIV	PLL Post-Divider Control Register
0x01C1 1138	PLLCMD	PLL Controller Command Register
0x01C1 113C	PLLSTAT	PLL Controller Status Register
0x01C1 1140	ALNCTL	PLL Controller Clock Align Control Register
0x01C1 1144	DCHANGE	PLLDIV Ratio Change Status Register
0x01C1 1148	CKEN	Clock Enable Control Register
0x01C1 114C	CKSTAT	Clock Status Register
0x01C1 1150	SYSTAT	SYSCLK Status Register
0x01C1 1160	PLLDIV4	PLL Controller Divider 4 Register
0x01C1 1164	PLLDIV5	PLL Controller Divider 5 Register
0x01C1 1168	PLLDIV6	PLL Controller Divider 6 Register
0x01C1 116C	PLLDIV7	PLL Controller Divider 7 Register

Copyright © 2008–2014, Texas Instruments Incorporated

6.7 Interrupts

The C6745/6747 devices have a large number of interrupts to service the needs of its many peripherals and subsystems.

6.7.1 DSP Interrupts

The C674x DSP interrupt controller combines device events into 12 prioritized interrupts. The source for each of the 12 CPU interrupts is user programmable and is listed in Table 6-6. Also, the interrupt controller controls the generation of the CPU exception, NMI, and emulation interrupts. Table 6-7 summarizes the C674x interrupt controller registers and memory locations.

Table 6-6. C6745/6747 DSP Interrupts

EVT#	INTERRUPT NAME	SOURCE
0	EVT0	C674x Int Ctl 0
1	EVT1	C674x Int Ctl 1
2	EVT2	C674x Int Ctl 2
3	EVT3	C674x Int Ctl 3
4	T64P0_TINT12	Timer64P0 - TINT12
5	SYSCFG_CHIPINT2	SYSCFG_CHIPSIG Register
6	PRU_EVTOUT0	PRU Interrupt
7	EHRPWM0	HiResTimer/PWM0 Interrupt
8	EDMA3_CC0_INT1	EDMA3 Channel Controller 0 Region 1 interrupt
9	EMU-DTDMA	C674x-ECM
10	EHRPWM0TZ	HiResTimer/PWM0 Trip Zone Interrupt
11	EMU-RTDXRX	C674x-RTDX
12	EMU-RTDXTX	C674x-RTDX
13	IDMAINT0	C674x-EMC
14	IDMAINT1	C674x-EMC
15	MMCSD_INT0	MMCSD MMC/SD Interrupt
16	MMCSD_INT1	MMCSD SDIO Interrupt
17	PRU_EVTOUT1	PRU Interrupt
18	EHRPWM1	HiResTimer/PWM1 Interrupt
19	USB0_INT	USB0 Interrupt
20	USB1_HCINT	USB1 OHCI Host Controller Interrupt
21	USB1_RWAKEUP	USB1 Remote Wakeup Interrupt
22	PRU_EVTOUT2	PRU Interrupt
23	EHRPWM1TZ	HiResTimer/PWM1 Trip Zone Interrupt
24	EHRPWM2	HiResTimer/PWM2 Interrupt
25	EHRPWM2TZ	HiResTimer/PWM2 Trip Zone Interrupt
26	EMAC_C0RXTHRESH	EMAC - Core 0 Receive Threshold Interrupt
27	EMAC_C0RX	EMAC - Core 0 Receive Interrupt
28	EMAC_C0TX	EMAC - Core 0 Transmit Interrupt
29	EMAC_C0MISC	EMAC - Core 0 Miscellaneous Interrupt
30	EMAC_C1RXTHRESH	EMAC - Core 1 Receive Threshold Interrupt
31	EMAC_C1RX	EMAC - Core 1 Receive Interrupt
32	EMAC_C1TX	EMAC - Core 1 Transmit Interrupt
33	EMAC_C1MISC	EMAC - Core 1 Miscellaneous Interrupt
34	UHPI_DSPINT	UHPI DSP Interrupt
35	PRU_EVTOUT3	PRU Interrupt
36	IIC0_INT	I2C0

Copyright © 2008–2014, Texas Instruments Incorporated

Table 6-6. C6745/6747 DSP Interrupts (continued)

EVT#	INTERRUPT NAME	SOURCE
37	SP0_INT	SPI0
38	UART0_INT	UART0
39	PRU_EVTOUT5	PRU Interrupt
40	T64P1_TINT12	Timer64P1 Interrupt 12
41	GPIO_B1INT	GPIO Bank 1 Interrupt
42	IIC1_INT	I2C1
43	SPI1_INT	SPI1
44	PRU_EVTOUT6	PRU Interrupt
45	ECAP0	ECAP0
46	UART_INT1	UART1
47	ECAP1	ECAP1
48	T64P1_TINT34	Timer64P1 Interrupt 34
49	GPIO_B2INT	GPIO Bank 2 Interrupt
50	PRU_EVTOUT7	PRU Interrupt
51	ECAP2	ECAP2
52	GPIO_B3INT	GPIO Bank 3 Interrupt
53	EQEP1	EQEP1
54	GPIO_B4INT	GPIO Bank 4 Interrupt
55	EMIFA_INT	EMIFA
56	EDMA3_CC0_ERRINT	EDMA3 Channel Controller 0
57	EDMA3_TC0_ERRINT	EDMA3 Transfer Controller 0
58	EDMA3_TC1_ERRINT	EDMA3 Transfer Controller 1
59	GPIO_B5INT	GPIO Bank 5 Interrupt
60	EMIFB_INT	EMIFB Memory Error Interrupt
61	MCASP_INT	McASP0,1,2 Combined RX/TX Interrupts
62	GPIO_B6INT	GPIO Bank 6 Interrupt
63	RTC_IRQS	RTC Combined
64	T64P0_TINT34	Timer64P0 Interrupt 34
65	GPIO_B0INT	GPIO Bank 0 Interrupt
66	PRU_EVTOUT4	PRU Interrupt
67	SYSCFG_CHIPINT3	SYSCFG_CHIPSIG Register
68	EQEP0	EQEP0
69	UART2_INT	UART2
70	PSC0_ALLINT	PSC0
71	PSC1_ALLINT	PSC1
72	GPIO_B7INT	GPIO Bank 7 Interrupt
73	LCDC_INT	LCD Controller
74	MPU_BOOTCFG_ERR	Shared MPU and SYSCFG Address/Protection Error Interrupt
75 - 77	-	Reserved
78	T64P0_CMPINT0	Timer64P0 - Compare 0
79	T64P0_CMPINT1	Timer64P0 - Compare 1
80	T64P0_CMPINT2	Timer64P0 - Compare 2
81	T64P0_CMPINT3	Timer64P0 - Compare 3
82	T64P0_CMPINT4	Timer64P0 - Compare 4
83	T64P0_CMPINT5	Timer64P0 - Compare 5
84	T64P0_CMPINT6	Timer64P0 - Compare 6
85	T64P0_CMPINT7	Timer64P0 - Compare 7

Copyright © 2008–2014, Texas Instruments Incorporated

Table 6-6. C6745/6747 DSP Interrupts (continued)

EVT#	INTERRUPT NAME	SOURCE
86	T64P1_CMPINT0	Timer64P1 - Compare 0
87	T64P1_CMPINT1	Timer64P1 - Compare 1
88	T64P1_CMPINT2	Timer64P1 - Compare 2
89	T64P1_CMPINT3	Timer64P1 - Compare 3
90	T64P1_CMPINT4	Timer64P1 - Compare 4
91	T64P1_CMPINT5	Timer64P1 - Compare 5
92	T64P1_CMPINT6	Timer64P1 - Compare 6
93	T64P1_CMPINT7	Timer64P1 - Compare 7
94 - 95	-	Reserved
96	INTERR	C674x-Int Ctl
97	EMC_IDMAERR	C674x-EMC
98 - 112	-	Reserved
113	PMC_ED	C674x-PMC
114 - 115	-	Reserved
116	UMC_ED1	C674x-UMC
117	UMC_ED2	C674x-UMC
118	PDC_INT	C674x-PDC
119	SYS_CMPA	C674x-SYS
120	PMC_CMPA	C674x-PMC
121	PMC_CMPA	C674x-PMC
122	DMC_CMPA	C674x-DMC
123	DMC_CMPA	C674x-DMC
124	UMC_CMPA	C674x-UMC
125	UMC_CMPA	C674x-UMC
126	EMC_CMPA	C674x-EMC
127	EMC_BUSERR	C674x-EMC

Copyright © 2008–2014, Texas Instruments Incorporated

Table 6-7. C674x DSP Interrupt Controller Registers

BYTE ADDRESS	ACRONYM	REGISTER DESCRIPTION
0x0180 0000	EVTFLAG0	Event flag register 0
0x0180 0004	EVTFLAG1	Event flag register 1
0x0180 0008	EVTFLAG2	Event flag register 2
0x0180 000C	EVTFLAG3	Event flag register 3
0x0180 0020	EVTSET0	Event set register 0
0x0180 0024	EVTSET1	Event set register 1
0x0180 0028	EVTSET2	Event set register 2
0x0180 002C	EVTSET3	Event set register 3
0x0180 0040	EVTCLR0	Event clear register 0
0x0180 0044	EVTCLR1	Event clear register 1
0x0180 0048	EVTCLR2	Event clear register 2
0x0180 004C	EVTCLR3	Event clear register 3
0x0180 0080	EVTMASK0	Event mask register 0
0x0180 0084	EVTMASK1	Event mask register 1
0x0180 0088	EVTMASK2	Event mask register 2
0x0180 008C	EVTMASK3	Event mask register 3
0x0180 00A0	MEVTFLAG0	Masked event flag register 0
0x0180 00A4	MEVTFLAG1	Masked event flag register 1
0x0180 00A8	MEVTFLAG2	Masked event flag register 2
0x0180 00AC	MEVTFLAG3	Masked event flag register 3
0x0180 00C0	EXPMASK0	Exception mask register 0
0x0180 00C4	EXPMASK1	Exception mask register 1
0x0180 00C8	EXPMASK2	Exception mask register 2
0x0180 00CC	EXPMASK3	Exception mask register 3
0x0180 00E0	MEXPFLAG0	Masked exception flag register 0
0x0180 00E4	MEXPFLAG1	Masked exception flag register 1
0x0180 00E8	MEXPFLAG2	Masked exception flag register 2
0x0180 00EC	MEXPFLAG3	Masked exception flag register 3
0x0180 0104	INTMUX1	Interrupt mux register 1
0x0180 0108	INTMUX2	Interrupt mux register 2
0x0180 010C	INTMUX3	Interrupt mux register 3
0x0180 0140 - 0x0180 0144	-	Reserved
0x0180 0180	INTXSTAT	Interrupt exception status
0x0180 0184	INTXCLR	Interrupt exception clear
0x0180 0188	INTDMASK	Dropped interrupt mask register
0x0180 01C0	EVTASRT	Event assert register

Copyright © 2008–2014, Texas Instruments Incorporated

6.8 General-Purpose Input/Output (GPIO)

The GPIO peripheral provides general-purpose pins that can be configured as either inputs or outputs. When configured as an output, a write to an internal register can control the state driven on the output pin. When configured as an input, the state of the input is detectable by reading the state of an internal register. In addition, the GPIO peripheral can produce CPU interrupts and EDMA events in different interrupt/event generation modes. The GPIO peripheral provides generic connections to external devices. The GPIO pins are grouped into banks of 16 pins per bank (i.e., bank 0 consists of GPIO [0:15]).

The C6745/6747 GPIO peripheral supports the following:

- Up to 128 Pins on ZKB and up to 109 Pins on PTP package configurable as GPIO
- External Interrupt and DMA request Capability
  - Every GPIO pin may be configured to generate an interrupt request on detection of rising and/or falling edges on the pin.
  - The interrupt requests within each bank are combined (logical or) to create eight unique bank level interrupt requests.
  - The bank level interrupt service routine may poll the INTSTATx register for its bank to determine which pin(s) have triggered the interrupt.
  - GPIO Banks 0, 1, 2, 3, 4, 5, 6, and 7 Interrupts assigned to DSP Events 65, 41, 49, 52, 54, 59, 62 and 72 respectively
  - Additionally, GPIO Banks 0, 1, 2, 3, 4, and 5 Interrupts assigned to EDMA events 6, 7, 22, 23, 28, and 29 respectively.
- Set/clear functionality: Firmware writes 1 to corresponding bit position(s) to set or to clear GPIO signal(s). This allows multiple firmware processes to toggle GPIO output signals without critical section protection (disable interrupts, program GPIO, re-enable interrupts, to prevent context switching to anther process during GPIO programming).
- Separate Input/Output registers
- Output register in addition to set/clear so that, if preferred by firmware, some GPIO output signals can be toggled by direct write to the output register(s).
- Output register, when read, reflects output drive status. This, in addition to the input register reflecting pin status and open-drain I/O cell, allows wired logic be implemented.

The memory map for the GPIO registers is shown in Table 6-8. See the *TMS320C6745/C6747 DSP Peripherals Overview Reference Guide.* (SPRUFK9) for more details.

6.8.1 GPIO Register Description(s)

Table 6-8. GPIO Registers

BYTE ADDRESS	ACRONYM	REGISTER DESCRIPTION
0x01E2 6000	REV	Peripheral Revision Register
0x01E2 6004	-	Reserved
0x01E2 6008	BINTEN	GPIO Interrupt Per-Bank Enable Register
GPIO BANKS 0 AND 1		
0x01E2 6010	DIR01	GPIO Banks 0 and 1 Direction Register
0x01E2 6014	OUT_DATA01	GPIO Banks 0 and 1 Output Data Register
0x01E2 6018	SET_DATA01	GPIO Banks 0 and 1 Set Data Register
0x01E2 601C	CLR_DATA01	GPIO Banks 0 and 1 Clear Data Register
0x01E2 6020	IN_DATA01	GPIO Banks 0 and 1 Input Data Register
0x01E2 6024	SET_RIS_TRIG01	GPIO Banks 0 and 1 Set Rising Edge Interrupt Register
0x01E2 6028	CLR_RIS_TRIG01	GPIO Banks 0 and 1 Clear Rising Edge Interrupt Register
0x01E2 602C	SET_FAL_TRIG01	GPIO Banks 0 and 1 Set Falling Edge Interrupt Register
0x01E2 6030	CLR_FAL_TRIG01	GPIO Banks 0 and 1 Clear Falling Edge Interrupt Register

Copyright © 2008–2014, Texas Instruments Incorporated

Table 6-8. GPIO Registers (continued)

BYTE ADDRESS	ACRONYM	REGISTER DESCRIPTION
0x01E2 6034	INTSTAT01	GPIO Banks 0 and 1 Interrupt Status Register
GPIO BANKS 2 AND 3		
0x01E2 6038	DIR23	GPIO Banks 2 and 3 Direction Register
0x01E2 603C	OUT_DATA23	GPIO Banks 2 and 3 Output Data Register
0x01E2 6040	SET_DATA23	GPIO Banks 2 and 3 Set Data Register
0x01E2 6044	CLR_DATA23	GPIO Banks 2 and 3 Clear Data Register
0x01E2 6048	IN_DATA23	GPIO Banks 2 and 3 Input Data Register
0x01E2 604C	SET_RIS_TRIG23	GPIO Banks 2 and 3 Set Rising Edge Interrupt Register
0x01E2 6050	CLR_RIS_TRIG23	GPIO Banks 2 and 3 Clear Rising Edge Interrupt Register
0x01E2 6054	SET_FAL_TRIG23	GPIO Banks 2 and 3 Set Falling Edge Interrupt Register
0x01E2 6058	CLR_FAL_TRIG23	GPIO Banks 2 and 3 Clear Falling Edge Interrupt Register
0x01E2 605C	INTSTAT23	GPIO Banks 2 and 3 Interrupt Status Register
GPIO BANKS 4 AND 5		
0x01E2 6060	DIR45	GPIO Banks 4 and 5 Direction Register
0x01E2 6064	OUT_DATA45	GPIO Banks 4 and 5 Output Data Register
0x01E2 6068	SET_DATA45	GPIO Banks 4 and 5 Set Data Register
0x01E2 606C	CLR_DATA45	GPIO Banks 4 and 5 Clear Data Register
0x01E2 6070	IN_DATA45	GPIO Banks 4 and 5 Input Data Register
0x01E2 6074	SET_RIS_TRIG45	GPIO Banks 4 and 5 Set Rising Edge Interrupt Register
0x01E2 6078	CLR_RIS_TRIG45	GPIO Banks 4 and 5 Clear Rising Edge Interrupt Register
0x01E2 607C	SET_FAL_TRIG45	GPIO Banks 4 and 5 Set Falling Edge Interrupt Register
0x01E2 6080	CLR_FAL_TRIG45	GPIO Banks 4 and 5 Clear Falling Edge Interrupt Register
0x01E2 6084	INTSTAT45	GPIO Banks 4 and 5 Interrupt Status Register
GPIO BANKS 6 AND 7		
0x01E2 6088	DIR67	GPIO Banks 6 and 7 Direction Register
0x01E2 608C	OUT_DATA67	GPIO Banks 6 and 7 Output Data Register
0x01E2 6090	SET_DATA67	GPIO Banks 6 and 7 Set Data Register
0x01E2 6094	CLR_DATA67	GPIO Banks 6 and 7 Clear Data Register
0x01E2 6098	IN_DATA67	GPIO Banks 6 and 7 Input Data Register
0x01E2 609C	SET_RIS_TRIG67	GPIO Banks 6 and 7 Set Rising Edge Interrupt Register
0x01E2 60A0	CLR_RIS_TRIG67	GPIO Banks 6 and 7 Clear Rising Edge Interrupt Register
0x01E2 60A4	SET_FAL_TRIG67	GPIO Banks 6 and 7 Set Falling Edge Interrupt Register
0x01E2 60A8	CLR_FAL_TRIG67	GPIO Banks 6 and 7 Clear Falling Edge Interrupt Register
0x01E2 60AC	INTSTAT67	GPIO Banks 6 and 7 Interrupt Status Register

Copyright © 2008–2014, Texas Instruments Incorporated

6.8.2 GPIO Peripheral Input/Output Electrical Data/Timing

Table 6-9. Timing Requirements for GPIO Inputs(1) (see Figure 6-10)

No.	PARAMETER		MIN	MAX	UNIT
1	$t_{w(GPIH)}$	Pulse duration, GP*n[m]* as input high	2C(1) (2)		ns
2	$t_{w(GPIL)}$	Pulse duration, GP*n[m]* as input low	2C(1) (2)		ns

(1) The pulse width given is sufficient to generate a CPU interrupt or an EDMA event. However, if a user wants to have C6745/6747 recognize the GPIx changes through software polling of the GPIO register, the GPIx duration must be extended to allow C6745/6747 enough time to access the GPIO register through the internal bus.
(2) C=SYSCLK4 period in ns.

Table 6-10. Switching Characteristics Over Recommended Operating Conditions for GPIO Outputs (see Figure 6-10)

No.	PARAMETER		MIN	MAX	UNIT
3	$t_{w(GPOH)}$	Pulse duration, GP*n[m]* as output high	2C(1) (2)		ns
4	$t_{w(GPOL)}$	Pulse duration, GP*n[m]* as output low	2C(1) (2)		ns

(1) This parameter value should not be used as a maximum performance specification. Actual performance of back-to-back accesses of the GPIO is dependent upon internal bus activity.
(2) C=SYSCLK4 period in ns.

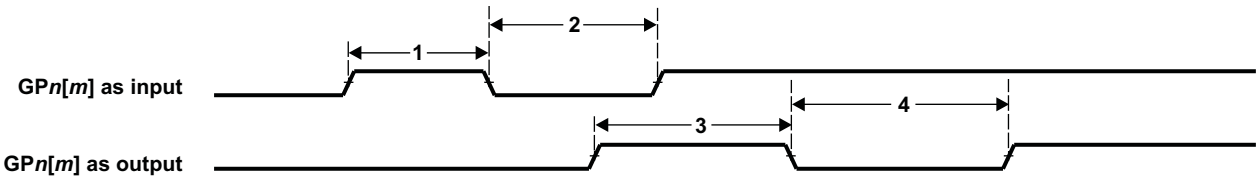

Figure 6-10. GPIO Port Timing

6.8.3 GPIO Peripheral External Interrupts Electrical Data/Timing

Table 6-11. Timing Requirements for External Interrupts(1) (see Figure 6-11)

No.	PARAMETER		MIN	MAX	UNIT
1	$t_{w(ILOW)}$	Width of the external interrupt pulse low	2C(1) (2)		ns
2	$t_{w(IHIGH)}$	Width of the external interrupt pulse high	2C (1) (2)		ns

(1) The pulse width given is sufficient to generate an interrupt or an EDMA event. However, if a user wants to have C6745/6747 recognize the GPIO changes through software polling of the GPIO register, the GPIO duration must be extended to allow C6745/6747 enough time to access the GPIO register through the internal bus.
(2) C=SYSCLK4 period in ns.

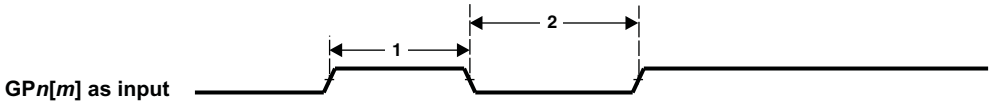

Figure 6-11. GPIO External Interrupt Timing

6.9 EDMA

Table 6-12 is the list of EDMA3 Channel Contoller Registers and Table 6-13 is the list of EDMA3 Transfer Controller registers.

Table 6-12. EDMA3 Channel Controller (EDMA3CC) Registers

BYTE ADDRESS	ACRONYM	REGISTER DESCRIPTION
0x01C0 0000	PID	Peripheral Identification Register
0x01C0 0004	CCCFG	EDMA3CC Configuration Register
GLOBAL REGISTERS		
0x01C0 0200	QCHMAP0	QDMA Channel 0 Mapping Register
0x01C0 0204	QCHMAP1	QDMA Channel 1 Mapping Register
0x01C0 0208	QCHMAP2	QDMA Channel 2 Mapping Register
0x01C0 020C	QCHMAP3	QDMA Channel 3 Mapping Register
0x01C0 0210	QCHMAP4	QDMA Channel 4 Mapping Register
0x01C0 0214	QCHMAP5	QDMA Channel 5 Mapping Register
0x01C0 0218	QCHMAP6	QDMA Channel 6 Mapping Register
0x01C0 021C	QCHMAP7	QDMA Channel 7 Mapping Register
0x01C0 0240	DMAQNUM0	DMA Channel Queue Number Register 0
0x01C0 0244	DMAQNUM1	DMA Channel Queue Number Register 1
0x01C0 0248	DMAQNUM2	DMA Channel Queue Number Register 2
0x01C0 024C	DMAQNUM3	DMA Channel Queue Number Register 3
0x01C0 0260	QDMAQNUM	QDMA Channel Queue Number Register
0x01C0 0284	QUEPRI	Queue Priority Register(1)
0x01C0 0300	EMR	Event Missed Register
0x01C0 0308	EMCR	Event Missed Clear Register
0x01C0 0310	QEMR	QDMA Event Missed Register
0x01C0 0314	QEMCR	QDMA Event Missed Clear Register
0x01C0 0318	CCERR	EDMA3CC Error Register
0x01C0 031C	CCERRCLR	EDMA3CC Error Clear Register
0x01C0 0320	EEVAL	Error Evaluate Register
0x01C0 0340	DRAE0	DMA Region Access Enable Register for Region 0
0x01C0 0348	DRAE1	DMA Region Access Enable Register for Region 1
0x01C0 0350	DRAE2	DMA Region Access Enable Register for Region 2
0x01C0 0358	DRAE3	DMA Region Access Enable Register for Region 3
0x01C0 0380	QRAE0	QDMA Region Access Enable Register for Region 0
0x01C0 0384	QRAE1	QDMA Region Access Enable Register for Region 1
0x01C0 0388	QRAE2	QDMA Region Access Enable Register for Region 2
0x01C0 038C	QRAE3	QDMA Region Access Enable Register for Region 3
0x01C0 0400 - 0x01C0 043C	Q0E0-Q0E15	Event Queue Entry Registers Q0E0-Q0E15
0x01C0 0440 - 0x01C0 047C	Q1E0-Q1E15	Event Queue Entry Registers Q1E0-Q1E15
0x01C0 0600	QSTAT0	Queue 0 Status Register
0x01C0 0604	QSTAT1	Queue 1 Status Register
0x01C0 0620	QWMTHRA	Queue Watermark Threshold A Register
0x01C0 0640	CCSTAT	EDMA3CC Status Register
GLOBAL CHANNEL REGISTERS		
0x01C0 1000	ER	Event Register
0x01C0 1008	ECR	Event Clear Register

(1) On previous architectures, the EDMA3TC priority was controlled by the queue priority register (QUEPRI) in the EDMA3CC memory-map. However for this device, the priority control for the transfer controllers is controlled by the chip-level registers in the System Configuration Module. You should use the chip-level registers and not QUEPRI to configure the TC priority.

Copyright © 2008–2014, Texas Instruments Incorporated

Table 6-12. EDMA3 Channel Controller (EDMA3CC) Registers (continued)

BYTE ADDRESS	ACRONYM	REGISTER DESCRIPTION
0x01C0 1010	ESR	Event Set Register
0x01C0 1018	CER	Chained Event Register
0x01C0 1020	EER	Event Enable Register
0x01C0 1028	EECR	Event Enable Clear Register
0x01C0 1030	EESR	Event Enable Set Register
0x01C0 1038	SER	Secondary Event Register
0x01C0 1040	SECR	Secondary Event Clear Register
0x01C0 1050	IER	Interrupt Enable Register
0x01C0 1058	IECR	Interrupt Enable Clear Register
0x01C0 1060	IESR	Interrupt Enable Set Register
0x01C0 1068	IPR	Interrupt Pending Register
0x01C0 1070	ICR	Interrupt Clear Register
0x01C0 1078	IEVAL	Interrupt Evaluate Register
0x01C0 1080	QER	QDMA Event Register
0x01C0 1084	QEER	QDMA Event Enable Register
0x01C0 1088	QEECR	QDMA Event Enable Clear Register
0x01C0 108C	QEESR	QDMA Event Enable Set Register
0x01C0 1090	QSER	QDMA Secondary Event Register
0x01C0 1094	QSECR	QDMA Secondary Event Clear Register
SHADOW REGION 0 CHANNEL REGISTERS		
0x01C0 2000	ER	Event Register
0x01C0 2008	ECR	Event Clear Register
0x01C0 2010	ESR	Event Set Register
0x01C0 2018	CER	Chained Event Register
0x01C0 2020	EER	Event Enable Register
0x01C0 2028	EECR	Event Enable Clear Register
0x01C0 2030	EESR	Event Enable Set Register
0x01C0 2038	SER	Secondary Event Register
0x01C0 2040	SECR	Secondary Event Clear Register
0x01C0 2050	IER	Interrupt Enable Register
0x01C0 2058	IECR	Interrupt Enable Clear Register
0x01C0 2060	IESR	Interrupt Enable Set Register
0x01C0 2068	IPR	Interrupt Pending Register
0x01C0 2070	ICR	Interrupt Clear Register
0x01C0 2078	IEVAL	Interrupt Evaluate Register
0x01C0 2080	QER	QDMA Event Register
0x01C0 2084	QEER	QDMA Event Enable Register
0x01C0 2088	QEECR	QDMA Event Enable Clear Register
0x01C0 208C	QEESR	QDMA Event Enable Set Register
0x01C0 2090	QSER	QDMA Secondary Event Register
0x01C0 2094	QSECR	QDMA Secondary Event Clear Register
SHADOW REGION 1 CHANNEL REGISTERS		
0x01C0 2200	ER	Event Register
0x01C0 2208	ECR	Event Clear Register
0x01C0 2210	ESR	Event Set Register
0x01C0 2218	CER	Chained Event Register
0x01C0 2220	EER	Event Enable Register

Copyright © 2008–2014, Texas Instruments Incorporated

Table 6-12. EDMA3 Channel Controller (EDMA3CC) Registers (continued)

BYTE ADDRESS	ACRONYM	REGISTER DESCRIPTION
0x01C0 2228	EECR	Event Enable Clear Register
0x01C0 2230	EESR	Event Enable Set Register
0x01C0 2238	SER	Secondary Event Register
0x01C0 2240	SECR	Secondary Event Clear Register
0x01C0 2250	IER	Interrupt Enable Register
0x01C0 2258	IECR	Interrupt Enable Clear Register
0x01C0 2260	IESR	Interrupt Enable Set Register
0x01C0 2268	IPR	Interrupt Pending Register
0x01C0 2270	ICR	Interrupt Clear Register
0x01C0 2278	IEVAL	Interrupt Evaluate Register
0x01C0 2280	QER	QDMA Event Register
0x01C0 2284	QEER	QDMA Event Enable Register
0x01C0 2288	QEECR	QDMA Event Enable Clear Register
0x01C0 228C	QEESR	QDMA Event Enable Set Register
0x01C0 2290	QSER	QDMA Secondary Event Register
0x01C0 2294	QSECR	QDMA Secondary Event Clear Register
0x01C0 4000 - 0x01C0 4FFF	—	Parameter RAM (PaRAM)

Table 6-13. EDMA3 Transfer Controller (EDMA3TC) Registers

Transfer Controller 0 BYTE ADDRESS	Transfer Controller 1 BYTE ADDRESS	ACRONYM	REGISTER DESCRIPTION
0x01C0 8000	0x01C0 8400	PID	Peripheral Identification Register
0x01C0 8004	0x01C0 8404	TCCFG	EDMA3TC Configuration Register
0x01C0 8100	0x01C0 8500	TCSTAT	EDMA3TC Channel Status Register
0x01C0 8120	0x01C0 8520	ERRSTAT	Error Status Register
0x01C0 8124	0x01C0 8524	ERREN	Error Enable Register
0x01C0 8128	0x01C0 8528	ERRCLR	Error Clear Register
0x01C0 812C	0x01C0 852C	ERRDET	Error Details Register
0x01C0 8130	0x01C0 8530	ERRCMD	Error Interrupt Command Register
0x01C0 8140	0x01C0 8540	RDRATE	Read Command Rate Register
0x01C0 8240	0x01C0 8640	SAOPT	Source Active Options Register
0x01C0 8244	0x01C0 8644	SASRC	Source Active Source Address Register
0x01C0 8248	0x01C0 8648	SACNT	Source Active Count Register
0x01C0 824C	0x01C0 864C	SADST	Source Active Destination Address Register
0x01C0 8250	0x01C0 8650	SABIDX	Source Active B-Index Register
0x01C0 8254	0x01C0 8654	SAMPPRXY	Source Active Memory Protection Proxy Register
0x01C0 8258	0x01C0 8658	SACNTRLD	Source Active Count Reload Register
0x01C0 825C	0x01C0 865C	SASRCBREF	Source Active Source Address B-Reference Register
0x01C0 8260	0x01C0 8660	SADSTBREF	Source Active Destination Address B-Reference Register
0x01C0 8280	0x01C0 8680	DFCNTRLD	Destination FIFO Set Count Reload Register
0x01C0 8284	0x01C0 8684	DFSRCBREF	Destination FIFO Set Source Address B-Reference Register
0x01C0 8288	0x01C0 8688	DFDSTBREF	Destination FIFO Set Destination Address B-Reference Register
0x01C0 8300	0x01C0 8700	DFOPT0	Destination FIFO Options Register 0
0x01C0 8304	0x01C0 8704	DFSRC0	Destination FIFO Source Address Register 0
0x01C0 8308	0x01C0 8708	DFCNT0	Destination FIFO Count Register 0
0x01C0 830C	0x01C0 870C	DFDST0	Destination FIFO Destination Address Register 0
0x01C0 8310	0x01C0 8710	DFBIDX0	Destination FIFO B-Index Register 0

Copyright © 2008–2014, Texas Instruments Incorporated

Table 6-13. EDMA3 Transfer Controller (EDMA3TC) Registers (continued)

Transfer Controller 0 BYTE ADDRESS	Transfer Controller 1 BYTE ADDRESS	ACRONYM	REGISTER DESCRIPTION
0x01C0 8314	0x01C0 8714	DFMPPRXY0	Destination FIFO Memory Protection Proxy Register 0
0x01C0 8340	0x01C0 8740	DFOPT1	Destination FIFO Options Register 1
0x01C0 8344	0x01C0 8744	DFSRC1	Destination FIFO Source Address Register 1
0x01C0 8348	0x01C0 8748	DFCNT1	Destination FIFO Count Register 1
0x01C0 834C	0x01C0 874C	DFDST1	Destination FIFO Destination Address Register 1
0x01C0 8350	0x01C0 8750	DFBIDX1	Destination FIFO B-Index Register 1
0x01C0 8354	0x01C0 8754	DFMPPRXY1	Destination FIFO Memory Protection Proxy Register 1
0x01C0 8380	0x01C0 8780	DFOPT2	Destination FIFO Options Register 2
0x01C0 8384	0x01C0 8784	DFSRC2	Destination FIFO Source Address Register 2
0x01C0 8388	0x01C0 8788	DFCNT2	Destination FIFO Count Register 2
0x01C0 838C	0x01C0 878C	DFDST2	Destination FIFO Destination Address Register 2
0x01C0 8390	0x01C0 8790	DFBIDX2	Destination FIFO B-Index Register 2
0x01C0 8394	0x01C0 8794	DFMPPRXY2	Destination FIFO Memory Protection Proxy Register 2
0x01C0 83C0	0x01C0 87C0	DFOPT3	Destination FIFO Options Register 3
0x01C0 83C4	0x01C0 87C4	DFSRC3	Destination FIFO Source Address Register 3
0x01C0 83C8	0x01C0 87C8	DFCNT3	Destination FIFO Count Register 3
0x01C0 83CC	0x01C0 87CC	DFDST3	Destination FIFO Destination Address Register 3
0x01C0 83D0	0x01C0 87D0	DFBIDX3	Destination FIFO B-Index Register 3
0x01C0 83D4	0x01C0 87D4	DFMPPRXY3	Destination FIFO Memory Protection Proxy Register 3

Table 6-14 shows an abbreviation of the set of registers which make up the parameter set for each of 128 EDMA events. Each of the parameter register sets consist of 8 32-bit word entries. Table 6-15 shows the parameter set entry registers with relative memory address locations within each of the parameter sets.

Table 6-14. EDMA Parameter Set RAM

BYTE ADDRESS RANGE	DESCRIPTION
0x01C0 4000 - 0x01C0 401F	Parameters Set 0 (8 32-bit words)
0x01C0 4020 - 0x01C0 403F	Parameters Set 1 (8 32-bit words)
0x01C0 4040 - 0x01cC0 405F	Parameters Set 2 (8 32-bit words)
0x01C0 4060 - 0x01C0 407F	Parameters Set 3 (8 32-bit words)
0x01C0 4080 - 0x01C0 409F	Parameters Set 4 (8 32-bit words)
0x01C0 40A0 - 0x01C0 40BF	Parameters Set 5 (8 32-bit words)
...	...
0x01C0 4FC0 - 0x01C0 4FDF	Parameters Set 126 (8 32-bit words)
0x01C0 4FE0 - 0x01C0 4FFF	Parameters Set 127 (8 32-bit words)

Table 6-15. Parameter Set Entries

BYTE OFFSET ADDRESS WITHIN THE PARAMETER SET	ACRONYM	PARAMETER ENTRY
0x0000	OPT	Option
0x0004	SRC	Source Address
0x0008	A_B_CNT	A Count, B Count
0x000C	DST	Destination Address
0x0010	SRC_DST_BIDX	Source B Index, Destination B Index
0x0014	LINK_BCNTRLD	Link Address, B Count Reload
0x0018	SRC_DST_CIDX	Source C Index, Destination C Index
0x001C	CCNT	C Count

Copyright © 2008–2014, Texas Instruments Incorporated

Table 6-16. EDMA Events

Event	Event Name / Source	Event	Event Name / Source
0	McASP0 Receive	16	MMCSD Receive
1	McASP0 Transmit	17	MMCSD Transmit
2	McASP1 Receive	18	SPI1 Receive
3	McASP1 Transmit	19	SPI1 Transmit
4	McASP2 Receive	20	PRU_EVENTOUT6
5	McASP2 Transmit	21	PRU_EVENTOUT7
6	GPIO Bank 0 Interrupt	22	GPIO Bank 2 Interrupt
7	GPIO Bank 1 Interrupt	23	GPIO Bank 3 Interrupt
8	UART0 Receive	24	I2C0 Receive
9	UART0 Transmit	25	I2C0 Transmit
10	Timer64P0 Event Out 12	26	I2C1 Receive
11	Timer64P0 Event Out 34	27	I2C1 Transmit
12	UART1 Receive	28	GPIO Bank 4 Interrupt
13	UART1 Transmit	29	GPIO Bank 5 Interrupt
14	SPI0 Receive	30	UART2 Receive
15	SPI0 Transmit	31	UART2 Transmit

Copyright © 2008–2014, Texas Instruments Incorporated

6.10 External Memory Interface A (EMIFA)

EMIFA is one of two external memory interfaces supported on the C6745/6747. It is primarily intended to support asynchronous memory types, such as NAND and NOR flash and Asynchronous SRAM. However on C6745/6747 EMIFA also provides a secondary interface to SDRAM.

6.10.1 EMIFA Asynchronous Memory Support

EMIFA supports asynchronous:

- SRAM memories
- NAND Flash memories
- NOR Flash memories

The EMIFA data bus width is up to 16-bits on the ZKB packageand 8 bits on the PTP package. Both devices support up to fifteen address lines and an external wait/interrupt input. Up to four asynchronous chip selects are supported by EMIFA ($\overline{\text{EMA_CS}}$[5:2]) . All four chip selects are available on the ZKB package. Two of the four are available on the PTP package ($\overline{\text{EMA_CS}}$[3:2]).

Each chip select has the following individually programmable attributes:

- Data Bus Width
- Read cycle timings: setup, hold, strobe
- Write cycle timings: setup, hold, strobe
- Bus turn around time
- Extended Wait Option With Programmable Timeout
- Select Strobe Option
- NAND flash controller supports 1-bit and 4-bit ECC calculation on blocks of 512 bytes.

6.10.2 EMIFA Synchronous DRAM Memory Support

The C6745/6747 ZKB package supports 16-bit SDRAM in addition to the asynchronous memories listed in Section 6.10.1. It has a single SDRAM chip select (EMA_CS[0]). SDRAM configurations that are supported are:

- One, Two, and Four Bank SDRAM devices
- Devices with Eight, Nine, Ten, and Eleven Column Address
- CAS Latency of two or three clock cycles
- Sixteen Bit Data Bus Width
- 3.3V LVCMOS Interface

Additionally, the SDRAM interface of EMIFA supports placing the SDRAM in Self Refresh and Powerdown Modes. Self Refresh mode allows the SDRAM to be put into a low power state while still retaining memory contents; since the SDRAM will continue to refresh itself even without clocks from the DSP. Powerdown mode achieves even lower power, except the DSP must periodically wake the SDRAM up and issue refreshes if data retention is required.

Finally, note that the EMIFA does not support Mobile SDRAM devices. Table 6-17 below shows the supported SDRAM configurations for EMIFA.

Copyright © 2008–2014, Texas Instruments Incorporated

Table 6-17. EMIFA Supported SDRAM Configurations(1)

SDRAM Memory Data Bus Width (bits)	Number of Memories	EMIFB Data Bus Size	Rows	Columns	Banks	Total Memory (Mbits)	Total Memory (Mbytes)	Memory Density (Mbits)
16	1	16	13	8	1	32	4	32
	1	16	13	8	2	64	8	64
	1	16	13	8	4	128	16	128
	1	16	13	9	1	64	8	64
	1	16	13	9	2	128	16	128
	1	16	13	9	4	256	32	256
	1	16	13	10	1	128	16	128
	1	16	13	10	2	256	32	256
	1	16	13	10	4	512	64	512
	1	16	13	11	1	256	32	256
	1	16	13	11	2	512	64	512
	1	16	13	11	4	1024	128	1024
8	2	16	13	8	1	32	4	16
	2	16	13	8	2	64	8	32
	2	16	13	8	4	128	16	64
	2	16	13	9	1	64	8	32
	2	16	13	9	2	128	16	64
	2	16	13	9	4	256	32	128
	2	16	13	10	1	128	16	64
	2	16	13	10	2	256	32	128
	2	16	13	10	4	512	64	256
	2	16	13	11	1	256	32	128
	2	16	13	11	2	512	64	256
	2	16	13	11	4	1024	128	512

(1) The shaded cells indicate configurations that are possible on the EMIFA interface but as of this writing SDRAM memories capable of supporting these densities are not available in the market.

6.10.3 EMIFA SDRAM Loading Limitations

EMIFA supports SDRAM up to 100 MHz with up to two SDRAM or asynchronous memory loads. Additional loads will limit the SDRAM operation to lower speeds and the maximum speed should be confirmed by board simulation using IBIS models.

6.10.4 EMIFA Connection Examples

Figure 6-12 illustrates an example of how SDRAM, NOR, and NAND flash devices might be connected to EMIFA of a C6745/6747 device simultaneously. The SDRAM chip select must be EMA_CS[0]. Note that the NOR flash is connected to EMA_CS[2] and the NAND flash is connected to EMA_CS[3] in this example. Note that any type of asynchronous memory may be connected to EMA_CS[5:2].

The on-chip bootloader makes some assumptions on which chip select the contains the boot image, and this depends on the boot mode. For NOR boot mode; the on-chip bootloader requires that the image be stored in NOR flash on EMA_CS[2]. For NAND boot mode, the bootloader requires that the boot image is stored in NAND flash on EMA_CS[3]. It is always possible to have the image span multiple chip selects, but this must be supported by second stage boot code stored in the external flash.

Copyright © 2008–2014, Texas Instruments Incorporated

A likely use case with more than one EMIFA chip select used for NAND flash is illustrated in Figure 6-13. This figure shows how two multiplane NAND flash devices with two chip selects each would connect to the EMIFA. In this case if NAND is the boot memory, then the boot image needs to be stored in the NAND area selected by EMA_CS[3]. Part of the application image could spill over into the NAND regions selected by other EMIFA chip selects; but would rely on the code stored in the EMA_CS[3] area to bootload it. Note that this example could also apply to the C6745 device; except only one multiplane NAND could be supported with only EMA_CS[3:2] available.

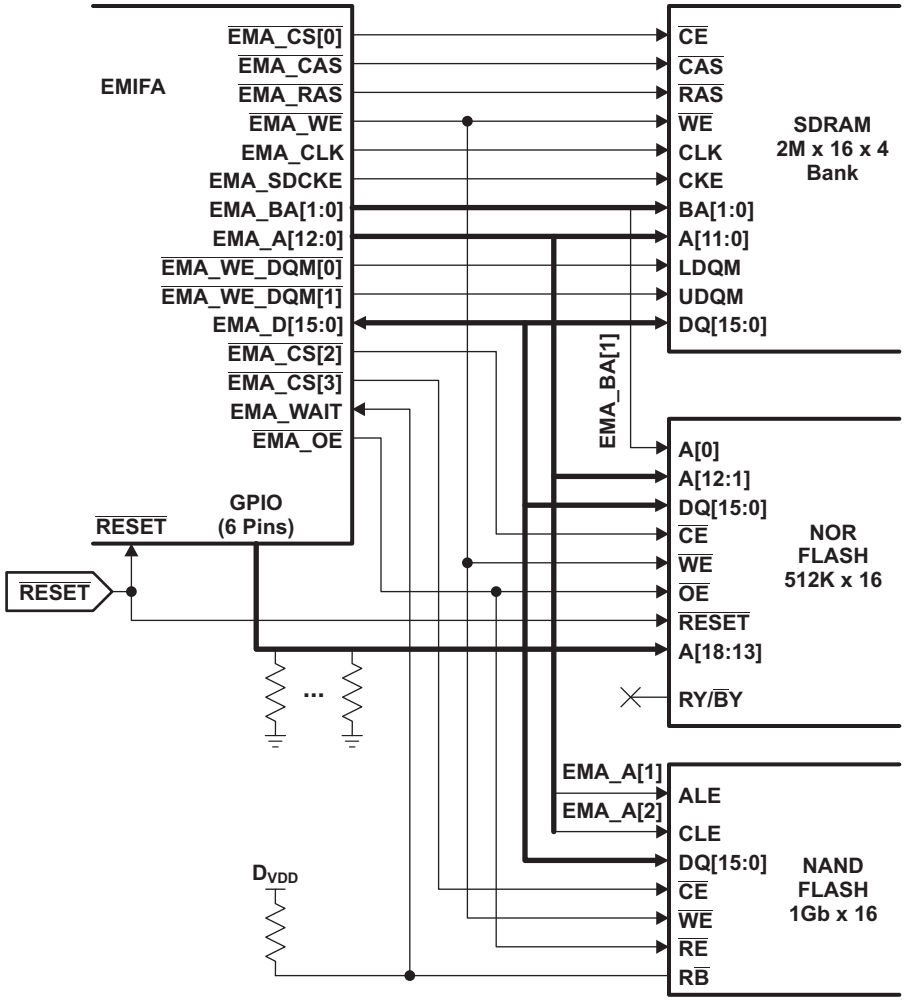

Figure 6-12. C6745/6747 Connection Diagram: SDRAM, NOR, NAND

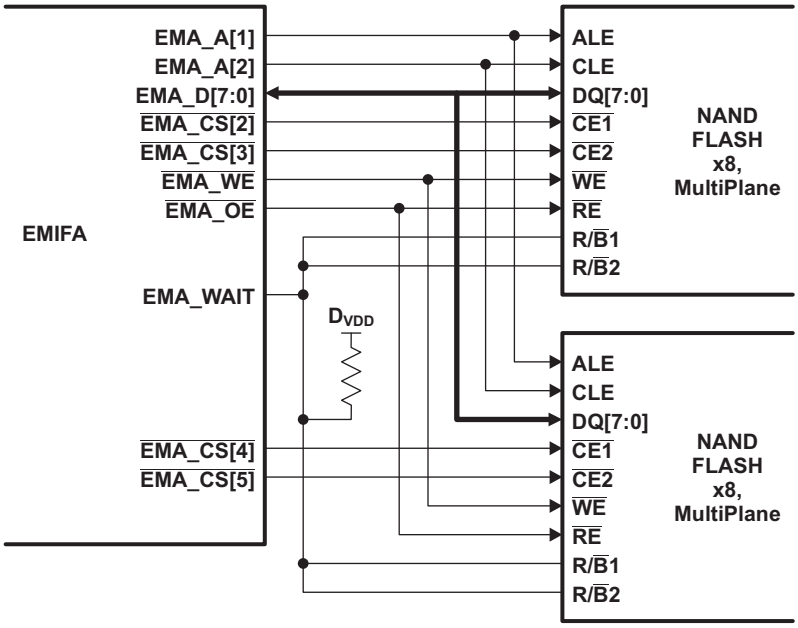

Figure 6-13. C6745/6747 EMIFA Connection Diagram: Multiple NAND Flash Planes

Copyright © 2008–2014, Texas Instruments Incorporated

6.10.5 External Memory Interface A (EMIFA) Registers

Table 6-18 is a list of the EMIF registers. For more information about these registers, see the C674x DSP External Memory Interface (EMIF) User's Guide (SPRUFL6).

Table 6-18. External Memory Interface (EMIFA) Registers

BYTE ADDRESS	ACRONYM	REGISTER DESCRIPTION
0x6800 0000	MIDR	Module ID Register
0x6800 0004	AWCC	Asynchronous Wait Cycle Configuration Register
0x6800 0008	SDCR	SDRAM Configuration Register
0x6800 000C	SDRCR	SDRAM Refresh Control Register
0x6800 0010	CE2CFG	Asynchronous 1 Configuration Register
0x6800 0014	CE3CFG	Asynchronous 2 Configuration Register
0x6800 0018	CE4CFG	Asynchronous 3 Configuration Register
0x6800 001C	CE5CFG	Asynchronous 4 Configuration Register
0x6800 0020	SDTIMR	SDRAM Timing Register
0x6800 003C	SDSRETR	SDRAM Self Refresh Exit Timing Register
0x6800 0040	INTRAW	EMIFA Interrupt Raw Register
0x6800 0044	INTMSK	EMIFA Interrupt Mask Register
0x6800 0048	INTMSKSET	EMIFA Interrupt Mask Set Register
0x6800 004C	INTMSKCLR	EMIFA Interrupt Mask Clear Register
0x6800 0060	NANDFCR	NAND Flash Control Register
0x6800 0064	NANDFSR	NAND Flash Status Register
0x6800 0070	NANDF1ECC	NAND Flash 1 ECC Register (CS2 Space)
0x6800 0074	NANDF2ECC	NAND Flash 2 ECC Register (CS3 Space)
0x6800 0078	NANDF3ECC	NAND Flash 3 ECC Register (CS4 Space)
0x6800 007C	NANDF4ECC	NAND Flash 4 ECC Register (CS5 Space)
0x6800 00BC	NAND4BITECCLOAD	NAND Flash 4-Bit ECC Load Register
0x6800 00C0	NAND4BITECC1	NAND Flash 4-Bit ECC Register 1
0x6800 00C4	NAND4BITECC2	NAND Flash 4-Bit ECC Register 2
0x6800 00C8	NAND4BITECC3	NAND Flash 4-Bit ECC Register 3
0x6800 00CC	NAND4BITECC4	NAND Flash 4-Bit ECC Register 4
0x6800 00D0	NANDERRADD1	NAND Flash 4-Bit ECC Error Address Register 1
0x6800 00D4	NANDERRADD2	NAND Flash 4-Bit ECC Error Address Register 2
0x6800 00D8	NANDERRVAL1	NAND Flash 4-Bit ECC Error Value Register 1
0x6800 00DC	NANDERRVAL2	NAND Flash 4-Bit ECC Error Value Register 2

Copyright © 2008–2014, Texas Instruments Incorporated

6.10.6 EMIFA Electrical Data/Timing

Table 6-19 through Table 6-22 assume testing over recommended operating conditions.

Table 6-19. EMIFA SDRAM Interface Timing Requirements

No.	PARAMETER		MIN	MAX	UNIT
19	$t_{su(DV-CLKH)}$	Input setup time, read data valid on EMA_D[15:0] before EMA_CLK rising	1.3		ns
20	$t_{h(CLKH-DIV)}$	Input hold time, read data valid on EMA_D[15:0] after EMA_CLK rising	1.5		ns

Table 6-20. EMIFA SDRAM Interface Switching Characteristics

No.	PARAMETER		MIN	MAX	UNIT
1	$t_{c(CLK)}$	Cycle time, EMIF clock EMA_CLK	10		ns
2	$t_{w(CLK)}$	Pulse width, EMIF clock EMA_CLK high or low	3		ns
3	$t_{d(CLKH-CSV)}$	Delay time, EMA_CLK rising to $\overline{\text{EMA_CS[0]}}$ valid		7	ns
4	$t_{oh(CLKH-CSIV)}$	Output hold time, EMA_CLK rising to $\overline{\text{EMA_CS[0]}}$ invalid	1		ns
5	$t_{d(CLKH-DQMV)}$	Delay time, EMA_CLK rising to EMA_$\overline{\text{WE}}$_DQM[1:0] valid		7	ns
6	$t_{oh(CLKH-DQMIV)}$	Output hold time, EMA_CLK rising to EMA_$\overline{\text{WE}}$_DQM[1:0] invalid	1		ns
7	$t_{d(CLKH-AV)}$	Delay time, EMA_CLK rising to EMA_A[12:0] and EMA_BA[1:0] valid		7	ns
8	$t_{oh(CLKH-AIV)}$	Output hold time, EMA_CLK rising to EMA_A[12:0] and EMA_BA[1:0] invalid	1		ns
9	$t_{d(CLKH-DV)}$	Delay time, EMA_CLK rising to EMA_D[15:0] valid		7	ns
10	$t_{oh(CLKH-DIV)}$	Output hold time, EMA_CLK rising to EMA_D[15:0] invalid	1		ns
11	$t_{d(CLKH-RASV)}$	Delay time, EMA_CLK rising to $\overline{\text{EMA_RAS}}$ valid		7	ns
12	$t_{oh(CLKH-RASIV)}$	Output hold time, EMA_CLK rising to $\overline{\text{EMA_RAS}}$ invalid	1		ns
13	$t_{d(CLKH-CASV)}$	Delay time, EMA_CLK rising to $\overline{\text{EMA_CAS}}$ valid		7	ns
14	$t_{oh(CLKH-CASIV)}$	Output hold time, EMA_CLK rising to $\overline{\text{EMA_CAS}}$ invalid	1		ns
15	$t_{d(CLKH-WEV)}$	Delay time, EMA_CLK rising to $\overline{\text{EMA_WE}}$ valid		7	ns
16	$t_{oh(CLKH-WEIV)}$	Output hold time, EMA_CLK rising to $\overline{\text{EMA_WE}}$ invalid	1		ns
17	$t_{dis(CLKH-DHZ)}$	Delay time, EMA_CLK rising to EMA_D[15:0] 3-stated		7	ns
18	$t_{ena(CLKH-DLZ)}$	Output hold time, EMA_CLK rising to EMA_D[15:0] driving	1		ns

Copyright © 2008–2014, Texas Instruments Incorporated

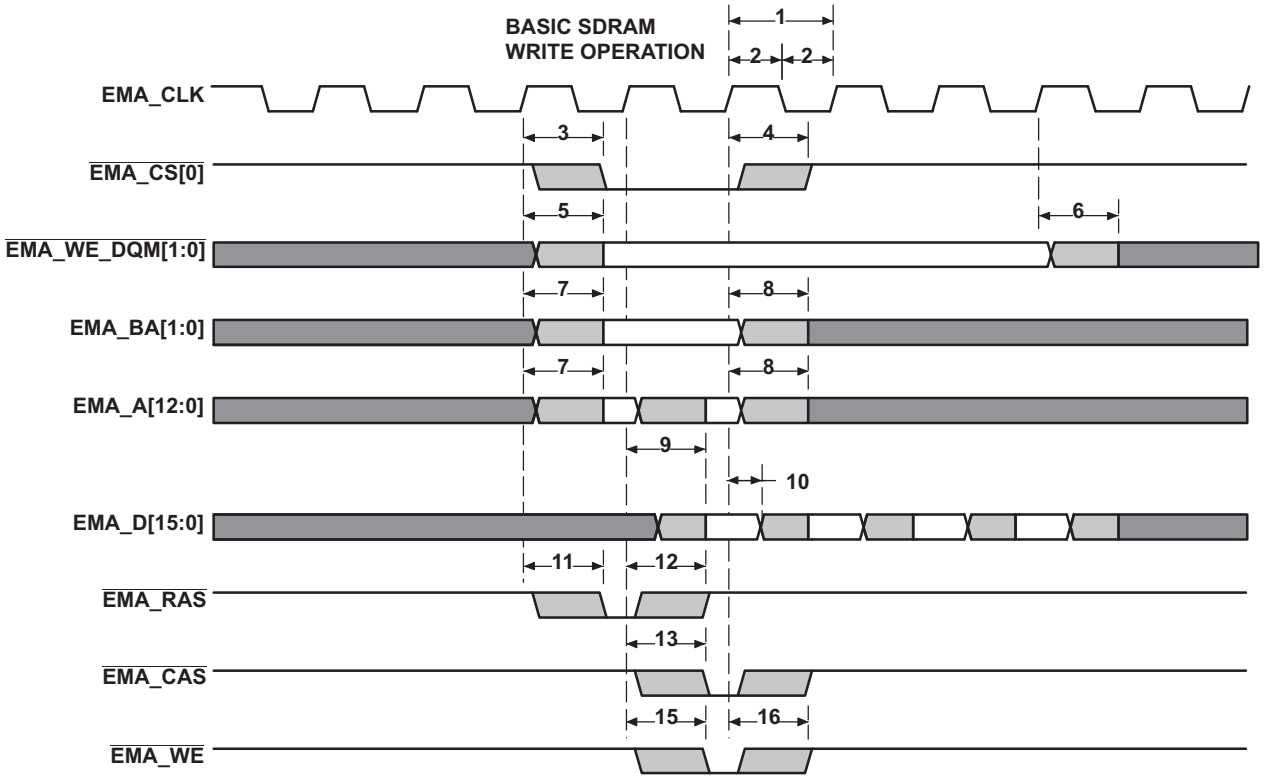

Figure 6-14. EMIFA Basic SDRAM Write Operation

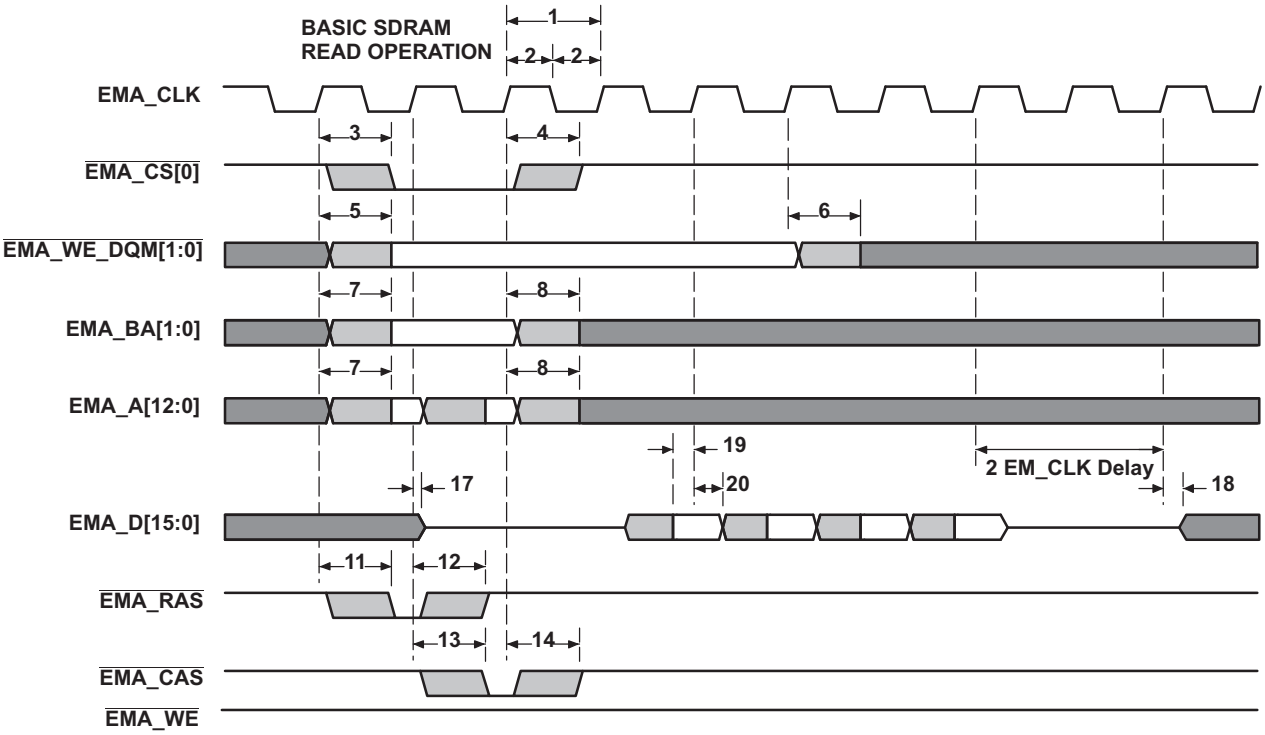

Figure 6-15. EMIFA Basic SDRAM Read Operation

Table 6-21. EMIFA Asynchronous Memory Timing Requirements(1)

No.	PARAMETER		MIN	NOM	MAX	UNIT
READS and WRITES						
E	$t_{c(CLK)}$	Cycle time, EMIFA module clock	10			ns
2	$t_{w(EM_WAIT)}$	Pulse duration, EM_WAIT assertion and deassertion	2E			ns
READS						
12	$t_{su(EMDV-EMOEH)}$	Setup time, EM_D[15:0] valid before $\overline{EM_OE}$ high	3			ns
13	$t_{h(EMOEH-EMDIV)}$	Hold time, EM_D[15:0] valid after $\overline{EM_OE}$ high	0			ns
14	$t_{su\ (EMOEL-EMWAIT)}$	Setup Time, EM_WAIT asserted before end of Strobe Phase(2)	4E+3			ns
WRITES						
28	$t_{su\ (EMWEL-EMWAIT)}$	Setup Time, EM_WAIT asserted before end of Strobe Phase(2)	4E+3			ns

(1) E = EMA_CLK period or in ns. EMA_CLK is selected either as SYSCLK3 or the PLL output clock divided by 4.5. As an example, when SYSCLK3 is selected and set to 100MHz, E=10ns.
(2) Setup before end of STROBE phase (if no extended wait states are inserted) by which EM_WAIT must be asserted to add extended wait states. Figure 6-18 and Figure 6-19 describe EMIF transactions that include extended wait states inserted during the STROBE phase. However, cycles inserted as part of this extended wait period should not be counted; the 4E requirement is to the start of where the HOLD phase would begin if there were no extended wait cycles.

Table 6-22. EMIFA Asynchronous Memory Switching Characteristics(1) (2) (3)

No.	PARAMETER		MIN	NOM	MAX	UNIT
READS and WRITES						
1	$t_{d(TURNAROUND)}$	Turn around time	(TA)*E - 3	(TA)*E	(TA)*E + 3	ns
READS						
3	$t_{c(EMRCYCLE)}$	EMIF read cycle time (EW = 0)	(RS+RST+RH)*E - 3	(RS+RST+RH)*E	(RS+RST+RH)*E + 3	ns
		EMIF read cycle time (EW = 1)	(RS+RST+RH+EWC)*E - 3	(RS+RST+RH+EWC)*E	(RS+RST+RH+EWC)*E + 3	ns
4	$t_{su(EMCEL-EMOEL)}$	Output setup time, $\overline{EMA_CE[5:2]}$ low to $\overline{EMA_OE}$ low (SS = 0)	(RS)*E-3	(RS)*E	(RS)*E+3	ns
		Output setup time, $\overline{EMA_CE[5:2]}$ low to $\overline{EMA_OE}$ low (SS = 1)	-3	0	+3	ns
5	$t_{h(EMOEH-EMCEH)}$	Output hold time, $\overline{EMA_OE}$ high to $\overline{EMA_CE[5:2]}$ high (SS = 0)	(RH)*E - 3	(RH)*E	(RH)*E + 3	ns
		Output hold time, $\overline{EMA_OE}$ high to $\overline{EMA_CE[5:2]}$ high (SS = 1)	-3	0	+3	ns
6	$t_{su(EMBAV-EMOEL)}$	Output setup time, $\overline{EMA_BA[1:0]}$ valid to $\overline{EMA_OE}$ low	(RS)*E-3	(RS)*E	(RS)*E+3	ns
7	$t_{h(EMOEH-EMBAIV)}$	Output hold time, $\overline{EMA_OE}$ high to $\overline{EMA_BA[1:0]}$ invalid	(RH)*E-3	(RH)*E	(RH)*E+3	ns
8	$t_{su(EMBAV-EMOEL)}$	Output setup time, $\overline{EMA_A[13:0]}$ valid to $\overline{EMA_OE}$ low	(RS)*E-3	(RS)*E	(RS)*E+3	ns
9	$t_{h(EMOEH-EMAIV)}$	Output hold time, $\overline{EMA_OE}$ high to $\overline{EMA_A[13:0]}$ invalid	(RH)*E-3	(RH)*E	(RH)*E+3	ns
10	$t_{w(EMOEL)}$	$\overline{EMA_OE}$ active low width (EW = 0)	(RST)*E-3	(RST)*E	(RST)*E+3	ns
		$\overline{EMA_OE}$ active low width (EW = 1)	(RST+EWC)*E-3	(RST+EWC)*E	(RST+EWC)*E+3	ns
11	$t_{d(EMWAITH-EMOEH)}$	Delay time from EMA_WAIT deasserted to $\overline{EMA_OE}$ high	3E-3	4E	4E+3	ns
WRITES						

(1) TA = Turn around, RS = Read setup, RST = Read strobe, RH = Read hold, WS = Write setup, WST = Write strobe, WH = Write hold, MEWC = Maximum external wait cycles. These parameters are programmed via the Asynchronous Bank and Asynchronous Wait Cycle Configuration Registers. These support the following range of values: TA[4-1], RS[16-1], RST[64-1], RH[8-1], WS[16-1], WST[64-1], WH[8-1], and MEW[1-256].
(2) E = EMA_CLK period or in ns. EMA_CLK is selected either as SYSCLK3 or the PLL output clock divided by 4.5. As an example, when SYSCLK3 is selected and set to 100MHz, E=10ns.
(3) EWC = external wait cycles determined by EMA_WAIT input signal. EWC supports the following range of values EWC[256-1]. Note that the maximum wait time before timeout is specified by bit field MEWC in the Asynchronous Wait Cycle Configuration Register.

Copyright © 2008–2014, Texas Instruments Incorporated

Table 6-22. EMIFA Asynchronous Memory Switching Characteristics[1] [2] [3] (continued)

No.	PARAMETER		MIN	NOM	MAX	UNIT
15	$t_{c(EMWCYCLE)}$	EMIF write cycle time (EW = 0)	(WS+WST+WH)*E-3	(WS+WST+WH)*E	(WS+WST+WH)*E+3	ns
		EMIF write cycle time (EW = 1)	(WS+WST+WH+EWC)*E - 3	(WS+WST+WH+EWC)*E	(WS+WST+WH+EWC)*E + 3	ns
16	$t_{su(EMCEL-EMWEL)}$	Output setup time, $\overline{EMA_CE[5:2]}$ low to $\overline{EMA_WE}$ low (SS = 0)	(WS)*E - 3	(WS)*E	(WS)*E + 3	ns
		Output setup time, $\overline{EMA_CE[5:2]}$ low to $\overline{EMA_WE}$ low (SS = 1)	-3	0	+3	ns
17	$t_{h(EMWEH-EMCEH)}$	Output hold time, $\overline{EMA_WE}$ high to $\overline{EMA_CE[5:2]}$ high (SS = 0)	(WH)*E-3	(WH)*E	(WH)*E+3	ns
		Output hold time, $\overline{EMA_WE}$ high to $\overline{EMA_CE[5:2]}$ high (SS = 1)	-3	0	+3	ns
18	$t_{su(EMDQMV-EMWEL)}$	Output setup time, $\overline{EMA_BA[1:0]}$ valid to $\overline{EMA_WE}$ low	(WS)*E-3	(WS)*E	(WS)*E+3	ns
19	$t_{h(EMWEH-EMDQMIV)}$	Output hold time, $\overline{EMA_WE}$ high to $\overline{EMA_BA[1:0]}$ invalid	(WH)*E-3	(WH)*E	(WH)*E+3	ns
20	$t_{su(EMBAV-EMWEL)}$	Output setup time, $\overline{EMA_BA[1:0]}$ valid to $\overline{EMA_WE}$ low	(WS)*E-3	(WS)*E	(WS)*E+3	ns
21	$t_{h(EMWEH-EMBAIV)}$	Output hold time, $\overline{EMA_WE}$ high to $\overline{EMA_BA[1:0]}$ invalid	(WH)*E-3	(WH)*E	(WH)*E+3	ns
22	$t_{su(EMAV-EMWEL)}$	Output setup time, $\overline{EMA_A[13:0]}$ valid to $\overline{EMA_WE}$ low	(WS)*E-3	(WS)*E	(WS)*E+3	ns
23	$t_{h(EMWEH-EMAIV)}$	Output hold time, $\overline{EMA_WE}$ high to $\overline{EMA_A[13:0]}$ invalid	(WH)*E-3	(WH)*E	(WH)*E+3	ns
24	$t_{w(EMWEL)}$	$\overline{EMA_WE}$ active low width (EW = 0)	(WST)*E-3	(WST)*E	(WST)*E+3	ns
		$\overline{EMA_WE}$ active low width (EW = 1)	(WST+EWC)*E-3	(WST+EWC)*E	(WST+EWC)*E+3	ns
25	$t_{d(EMWAITH-EMWEH)}$	Delay time from EMA_WAIT deasserted to $\overline{EMA_WE}$ high	3E-3	4E	4E+3	ns
26	$t_{su(EMDV-EMWEL)}$	Output setup time, $\overline{EMA_D[15:0]}$ valid to $\overline{EMA_WE}$ low	(WS)*E-3	(WS)*E	(WS)*E+3	ns
27	$t_{h(EMWEH-EMDIV)}$	Output hold time, $\overline{EMA_WE}$ high to $\overline{EMA_D[15:0]}$ invalid	(WH)*E-3	(WH)*E	(WH)*E+3	ns

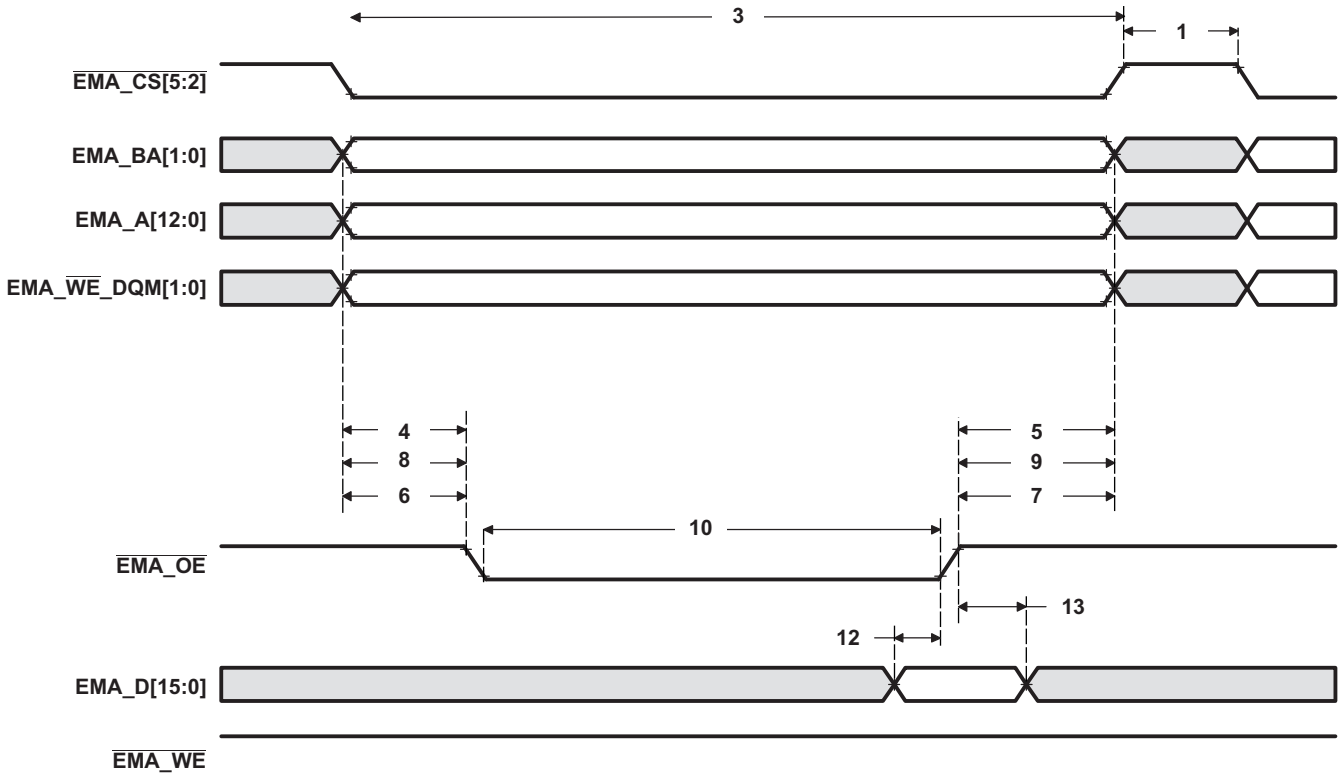

Figure 6-16. Asynchronous Memory Read Timing for EMIFA

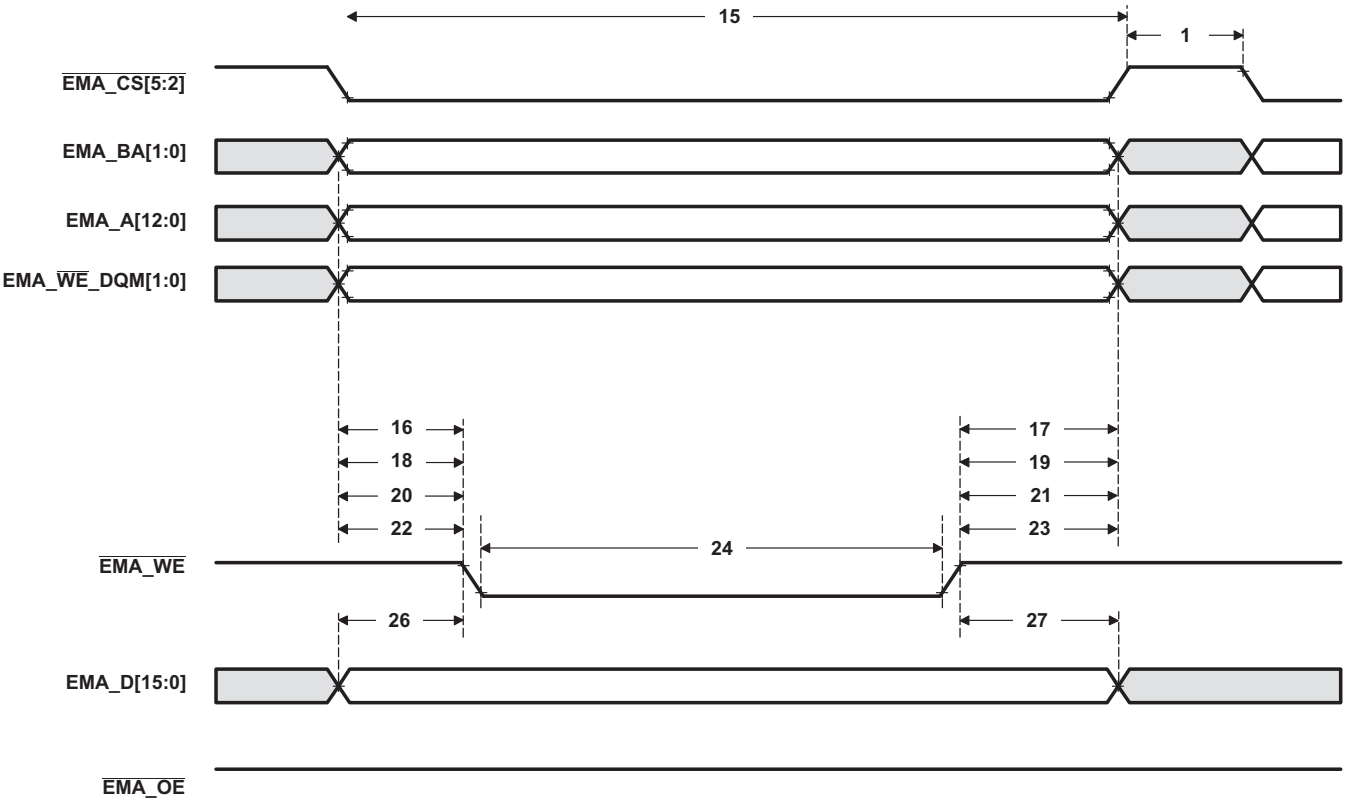

Figure 6-17. Asynchronous Memory Write Timing for EMIFA

Copyright © 2008–2014, Texas Instruments Incorporated

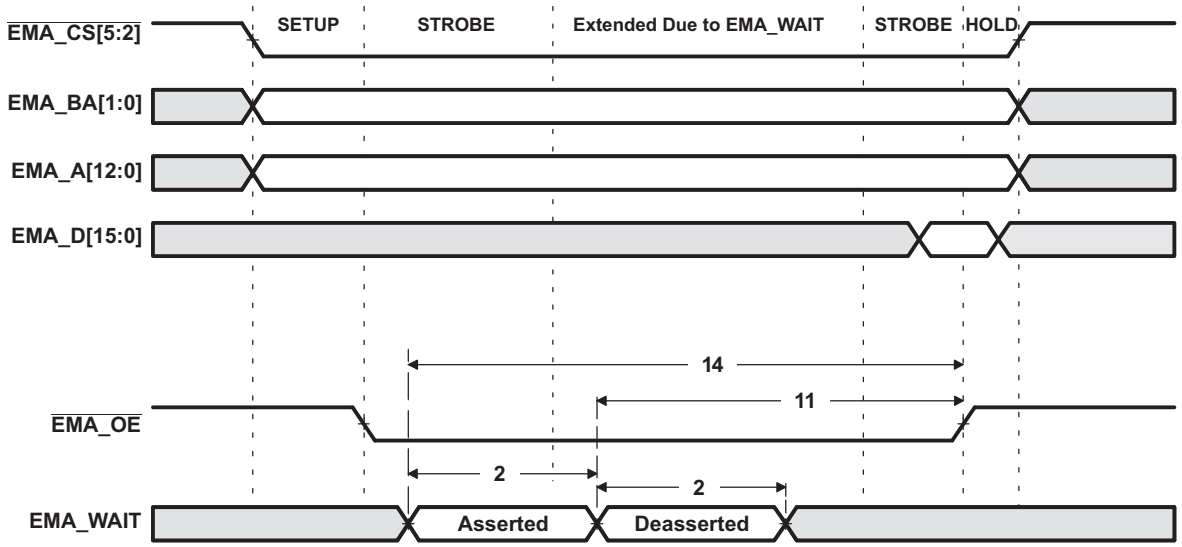

Figure 6-18. EMA_WAIT Read Timing Requirements

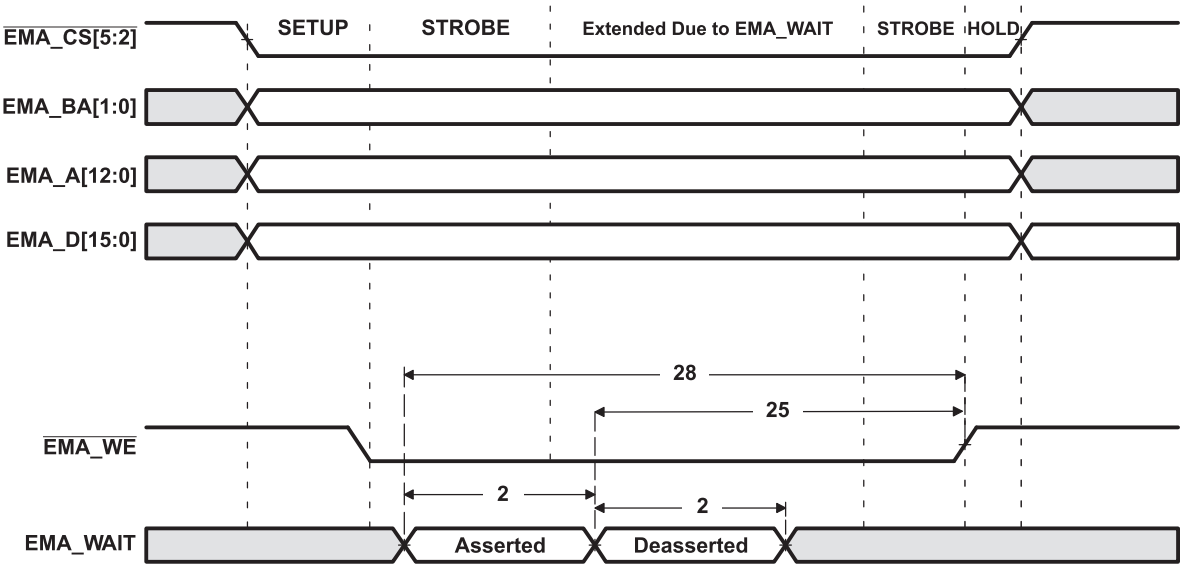

Figure 6-19. EMA_WAIT Write Timing Requirements

6.11 External Memory Interface B (EMIFB)

Figure 6-20 illustrates a high-level view of the EMIFB and its connections within the device. Multiple requesters have access to EMIFB through a switched central resource (indicated as crossbar in the figure). The EMIFB implements a split transaction internal bus, allowing concurrence between reads and writes from the various requesters.

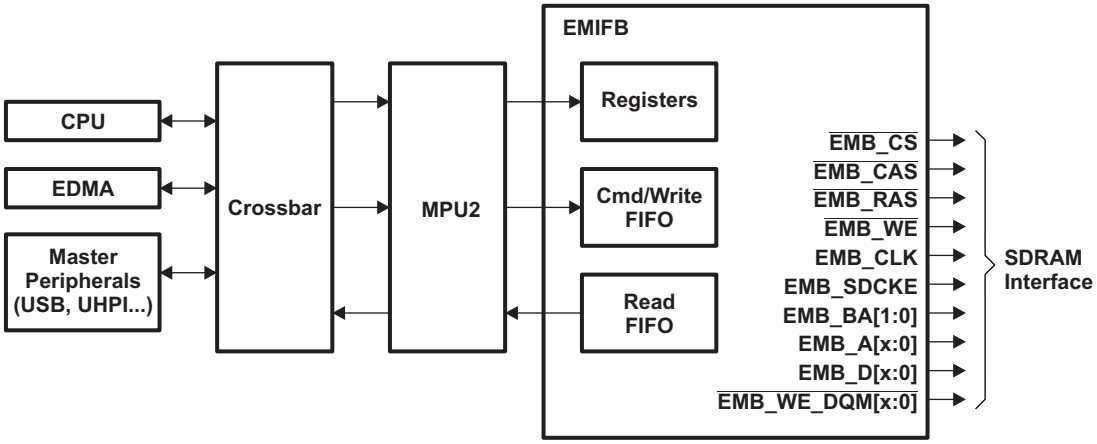

Figure 6-20. EMIFB Functional Block Diagram

EMIFB supports a 3.3V LVCMOS Interface.

6.11.1 EMIFB SDRAM Loading Limitations

EMIFB supports SDRAM up to 152MHz with up to two SDRAM or asynchronous memory loads. Additional loads will limit the SDRAM operation to lower speeds and the maximum speed should be confirmed by board simulation using IBIS models.

Copyright © 2008–2014, Texas Instruments Incorporated

6.11.2 Interfacing to SDRAM

The EMIFB supports a glueless interface to SDRAM devices with the following characteristics:

- Pre-charge bit is A[10]
- Supports 8, 9, 10 or 11 column address bits
- Supports up to 13 row address bits
- Supports 1, 2 or 4 internal banks

Table 6-23 shows the supported SDRAM configurations for EMIFB.

Table 6-23. EMIFB Supported SDRAM Configurations(1)

SDRAM Memory Data Bus Width (bits)	Number of Memories	EMIFB Data Bus Size	Rows	Columns	Banks	Total Memory (Mbits)	Total Memory (Mbytes)	Memory Density (Mbits)
32	1	32	13	8	1	64	8	64
	1	32	13	8	2	128	16	128
	1	32	13	8	4	256	32	256
	1	32	13	9	1	128	16	128
	1	32	13	9	2	256	32	256
	1	32	13	9	4	512	64	512
	1	32	13	10	1	256	32	256
	1	32	13	10	2	512	64	512
	1	32	13	10	4	1024	128	1024
	1	32	13	11	1	512	64	512
	1	32	13	11	2	1024	128	1024
	1	32	13	11	4	2048	256	2048
16	2	32	13	8	1	64	8	32
	2	32	13	8	2	128	16	64
	2	32	13	8	4	256	32	128
	2	32	13	9	1	128	16	64
	2	32	13	9	2	256	32	128
	2	32	13	9	4	512	64	256
	2	32	13	10	1	256	32	128
	2	32	13	10	2	512	64	256
	2	32	13	10	4	1024	128	512
	2	32	13	11	1	512	64	256
	2	32	13	11	2	1024	128	512
	2	32	13	11	4	2048	256	1024

(1) The shaded cells indicate configurations that are possible on the EMIFB interface but as of this writing SDRAM memories capable of supporting these densities are not available in the market.

Figure 6-21 shows an interface between the EMIFB and a 2M × 16 × 4 bank SDRAM device. In addition, Figure 6-22 shows an interface between the EMIFB and a 2M × 32 × 4 bank SDRAM device and Figure 6-23 shows an interface between the EMIFB and two 4M × 16 × 4 bank SDRAM devices. Refer to Table 6-24, as an example that shows additional list of commonly-supported SDRAM devices and the required connections for the address pins. Note that in Table 6-24, page size/column size (not indicated in the table) is varied to get the required addressability range.

Copyright © 2008–2014, Texas Instruments Incorporated

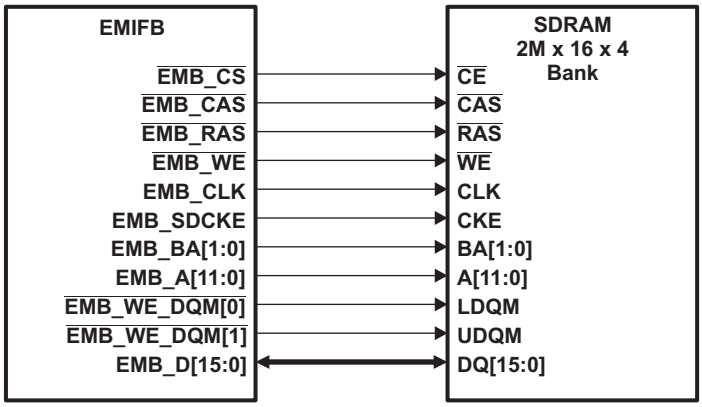

Figure 6-21. EMIFB to 2M × 16 × 4 bank SDRAM Interface

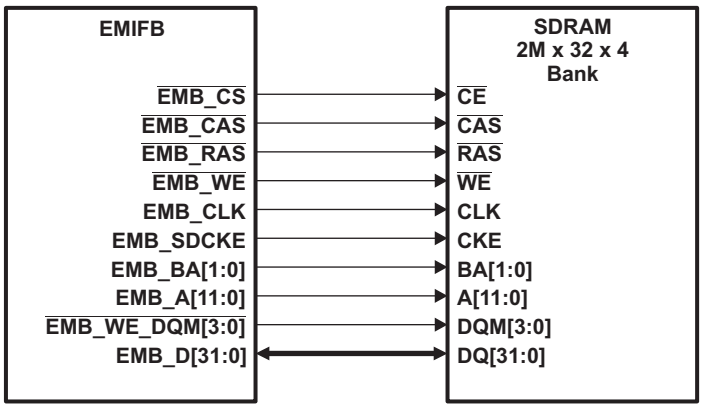

Figure 6-22. EMIFB to 2M × 32 × 4 bank SDRAM Interface

Copyright © 2008–2014, Texas Instruments Incorporated

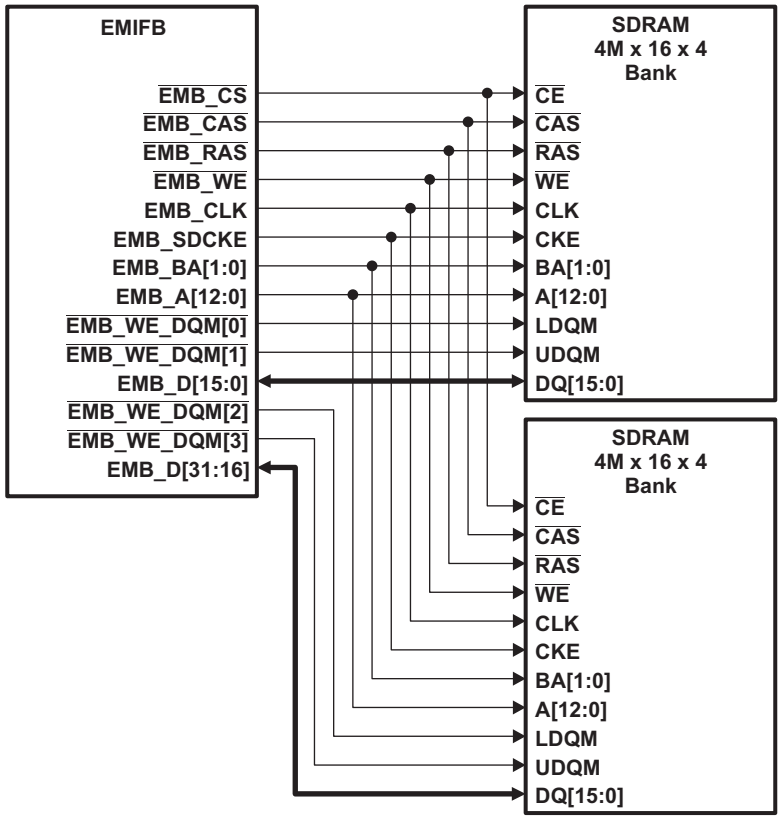

Figure 6-23. EMIFB to Dual 4M × 16 × 4 bank SDRAM Interface

Table 6-24. Example of 16/32-bit EMIFB Address Pin Connections

SDRAM SIZE	WIDTH	BANKS	MEMORY	ADDRESS PINS
64M bits	×16	4	SDRAM	A[11:0]
			EMIFB	EMB_A[11:0]
	×32	4	SDRAM	A[10:0]
			EMIFB	EMB_A[10:0]
128M bits	×16	4	SDRAM	A[11:0]
			EMIFB	EMB_A[11:0]
	×32	4	SDRAM	A[11:0]
			EMIFB	EMB_A[11:0]
256M bits	×16	4	SDRAM	A[12:0]
			EMIFB	EMB_A[12:0]
	×32	4	SDRAM	A[11:0]
			EMIFB	EMB_A[11:0]
512M bits	×16	4	SDRAM	A[12:0]
			EMIFB	EMB_A[12:0]
	×32	4	SDRAM	A[12:0]
			EMIFB	EMB_A[12:0]

Table 6-25 is a list of the EMIFB registers.

Table 6-25. EMIFB Base Controller Registers

BYTE ADDRESS	ACRONYM	REGISTER DESCRIPTION
0xB000 0000	MIDR	Module ID Register

Copyright © 2008–2014, Texas Instruments Incorporated

Table 6-25. EMIFB Base Controller Registers (continued)

BYTE ADDRESS	ACRONYM	REGISTER DESCRIPTION
0xB000 0008	SDCFG	SDRAM Configuration Register
0xB000 000C	SDRFC	SDRAM Refresh Control Register
0xB000 0010	SDTIM1	SDRAM Timing Register 1
0xB000 0014	SDTIM2	SDRAM Timing Register 2
0xB000 001C	SDCFG2	SDRAM Configuration 2 Register
0xB000 0020	BPRIO	Peripheral Bus Burst Priority Register
0xB000 0040	PC1	Performance Counter 1 Register
0xB000 0044	PC2	Performance Counter 2 Register
0xB000 0048	PCC	Performance Counter Configuration Register
0xB000 004C	PCMRS	Performance Counter Master Region Select Register
0xB000 0050	PCT	Performance Counter Time Register
0xB000 00C0	IRR	Interrupt Raw Register
0xB000 00C4	IMR	Interrupt Mask Register
0xB000 00C8	IMSR	Interrupt Mask Set Register
0xB000 00CC	IMCR	Interrupt Mask Clear Register

Copyright © 2008–2014, Texas Instruments Incorporated

6.11.3 EMIFB Electrical Data/Timing

Table 6-26. EMIFB SDRAM Interface Timing Requirements

NO.			CVDD = 1.3 V(1)		CVDD = 1.2V(2)		UNIT
			MIN	MAX	MIN	MAX	
19	$t_{(DV-CLKH)}$	Input setup time, read data valid on EMB_D[31:0] before EMB_CLK rising	0.59		0.8		ns
20	$t_{h(CLKH-DIV)}$	Input hold time, read data valid on EMB_D[31:0] after EMB_CLK rising	1.25		1.5		ns

(1) Commercial (default), Industrial and Extended temperature range rated devices for 456 MHz max CPU operating frequency as applicable to the device
(2) Commercial (default), Industrial, Extended and Automotive temperature range rated devices for 400/375/300/266/200 MHz max CPU operating frequencies as applicable to the device

Table 6-27. EMIFB SDRAM Interface Switching Characteristics for Commercial (Default) Temperature Range

NO.	PARAMETER		CVDD = 1.3 V(1)		CVDD = 1.2V(2)		UNIT
			MIN	MAX	MIN	MAX	
1	$t_{c(CLK)}$	Cycle time, EMIF clock EMB_CLK	6.579		7.5		ns
2	$t_{w(CLK)}$	Pulse width, EMIF clock EMB_CLK high or low	2.63		3		ns
3	$t_{d(CLKH-CSV)}$	Delay time, EMB_CLK rising to $\overline{EMB_CS[0]}$ valid		4.25		5.1	ns
4	$t_{oh(CLKH-CSIV)}$	Output hold time, EMB_CLK rising to $\overline{EMB_CS[0]}$ invalid	1.1		1.1		ns
5	$t_{d(CLKH-DQMV)}$	Delay time, EMB_CLK rising to EMB_$\overline{WE}$_DQM[3:0] valid		4.25		5.1	ns
6	$t_{oh(CLKH-DQMIV)}$	Output hold time, EMB_CLK rising to EMB_$\overline{WE}$_DQM[3:0] invalid	1.1		1.1		ns
7	$t_{d(CLKH-AV)}$	Delay time, EMB_CLK rising to EMB_A[12:0] and EMB_BA[1:0] valid		4.25		5.1	ns
8	$t_{oh(CLKH-AIV)}$	Output hold time, EMB_CLK rising to EMB_A[12:0] and EMB_BA[1:0] invalid	1.1		1.1		ns
9	$t_{d(CLKH-DV)}$	Delay time, EMB_CLK rising to EMB_D[31:0] valid		4.25		5.1	ns
10	$t_{oh(CLKH-DIV)}$	Output hold time, EMB_CLK rising to EMB_D[31:0] invalid	1.1		1.1		ns
11	$t_{d(CLKH-RASV)}$	Delay time, EMB_CLK rising to $\overline{EMB_RAS}$ valid		4.25		5.1	ns
12	$t_{oh(CLKH-RASIV)}$	Output hold time, EMB_CLK rising to $\overline{EMB_RAS}$ invalid	1.1		1.1		ns
13	$t_{d(CLKH-CASV)}$	Delay time, EMB_CLK rising to $\overline{EMB_CAS}$ valid		4.25		5.1	ns
14	$t_{oh(CLKH-CASIV)}$	Output hold time, EMB_CLK rising to $\overline{EMB_CAS}$ invalid	1.1		1.1		ns
15	$t_{d(CLKH-WEV)}$	Delay time, EMB_CLK rising to $\overline{EMB_WE}$ valid		4.25		5.1	ns
16	$t_{oh(CLKH-WEIV)}$	Output hold time, EMB_CLK rising to $\overline{EMB_WE}$ invalid	1.1		1.1		ns
17	$t_{dis(CLKH-DHZ)}$	Delay time, EMB_CLK rising to EMB_D[31:0] tri-stated		4.25		5.1	ns
18	$t_{(CLKH-DLZ)}$	Output hold time, EMB_CLK rising to EMB_D[31:0] driving	1.1		1.1		ns

(1) Commercial (default) temperature range rated devices for 456 MHz max CPU operating frequency as applicable to the device
(2) Commercial (default) temperature range rated devices for 400/375/300/266/200 MHz max CPU operating frequencies as applicable to the device

Copyright © 2008–2014, Texas Instruments Incorporated

Table 6-28. EMIFB SDRAM Interface Switching Characteristics for Industrial, Extended, and Automotive Temperature Ranges

NO.	PARAMETER		CVDD = 1.3 V(1)		CVDD = 1.2V(2)		UNIT
			MIN	MAX	MIN	MAX	
1	$t_{c(CLK)}$	Cycle time, EMIF clock EMB_CLK	6.579		7.5		ns
2	$t_{w(CLK)}$	Pulse width, EMIF clock EMB_CLK high or low	2.63		3		ns
3	$t_{d(CLKH-CSV)}$	Delay time, EMB_CLK rising to $\overline{EMB_CS[0]}$ valid		4.25		5.1	ns
4	$t_{oh(CLKH-CSIV)}$	Output hold time, EMB_CLK rising to $\overline{EMB_CS[0]}$ invalid	1.1		0.9		ns
5	$t_{d(CLKH-DQMV)}$	Delay time, EMB_CLK rising to EMB_$\overline{WE}$_DQM[3:0] valid		4.25		5.1	ns
6	$t_{oh(CLKH-DQMIV)}$	Output hold time, EMB_CLK rising to EMB_$\overline{WE}$_DQM[3:0] invalid	1.1		0.9		ns
7	$t_{d(CLKH-AV)}$	Delay time, EMB_CLK rising to EMB_A[12:0] and EMB_BA[1:0] valid		4.25		5.1	ns
8	$t_{oh(CLKH-AIV)}$	Output hold time, EMB_CLK rising to EMB_A[12:0] and EMB_BA[1:0] invalid	1.1		0.9		ns
9	$t_{d(CLKH-DV)}$	Delay time, EMB_CLK rising to EMB_D[31:0] valid		4.25		5.1	ns
10	$t_{oh(CLKH-DIV)}$	Output hold time, EMB_CLK rising to EMB_D[31:0] invalid	1.1		0.9		ns
11	$t_{d(CLKH-RASV)}$	Delay time, EMB_CLK rising to $\overline{EMB_RAS}$ valid		4.25		5.1	ns
12	$t_{oh(CLKH-RASIV)}$	Output hold time, EMB_CLK rising to $\overline{EMB_RAS}$ invalid	1.1		0.9		ns
13	$t_{d(CLKH-CASV)}$	Delay time, EMB_CLK rising to $\overline{EMB_CAS}$ valid		4.25		5.1	ns
14	$t_{oh(CLKH-CASIV)}$	Output hold time, EMB_CLK rising to $\overline{EMB_CAS}$ invalid	1.1		0.9		ns
15	$t_{d(CLKH-WEV)}$	Delay time, EMB_CLK rising to $\overline{EMB_WE}$ valid		4.25		5.1	ns
16	$t_{oh(CLKH-WEIV)}$	Output hold time, EMB_CLK rising to $\overline{EMB_WE}$ invalid	1.1		0.9		ns
17	$t_{dis(CLKH-DHZ)}$	Delay time, EMB_CLK rising to EMB_D[31:0] tri-stated		4.25		5.1	ns
18	$t_{(CLKH-DLZ)}$	Output hold time, EMB_CLK rising to EMB_D[31:0] driving	1.1		0.9		ns

(1) Industrial temperature range rated devices for 456 MHz max CPU operating frequency as applicable to the device
(2) Industrial, Extended and Automotive temperature range rated devices for 400/375/300/266/200 MHz max CPU operating frequencies as applicable to the device

Copyright © 2008–2014, Texas Instruments Incorporated

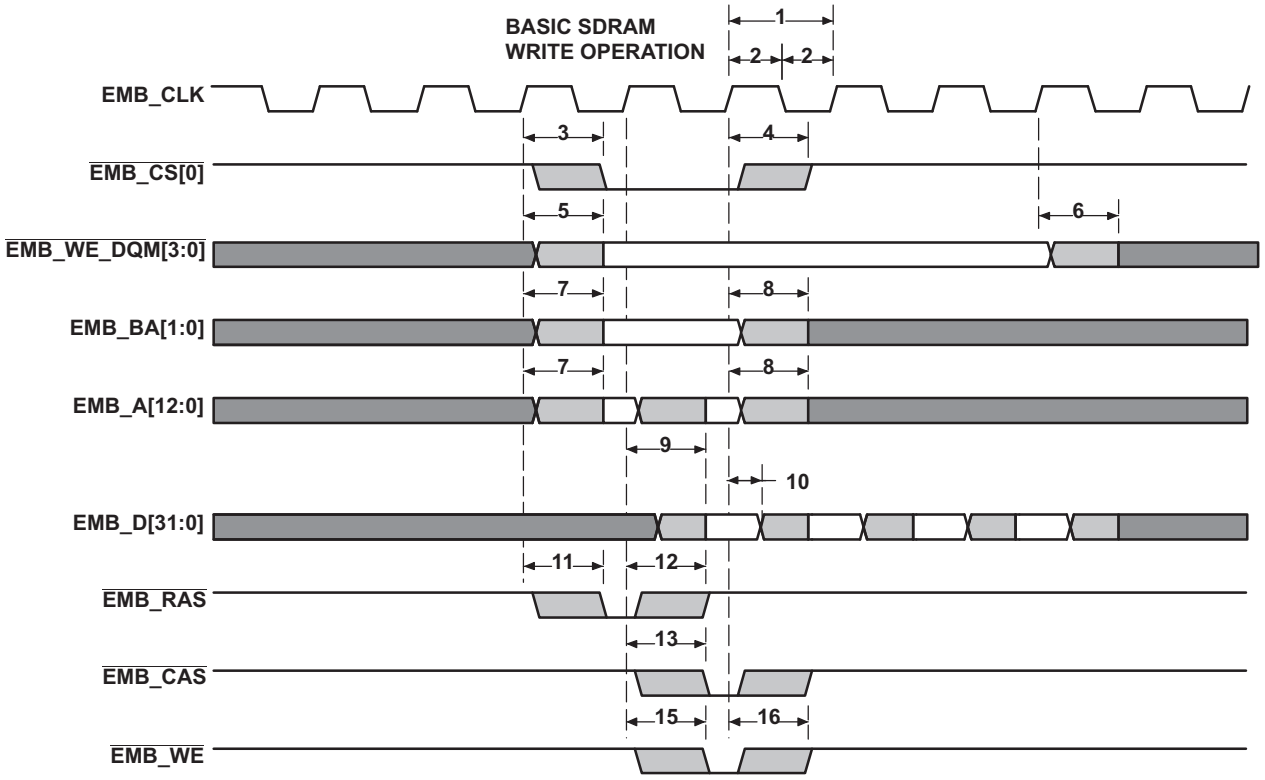

Figure 6-24. EMIFB Basic SDRAM Write Operation

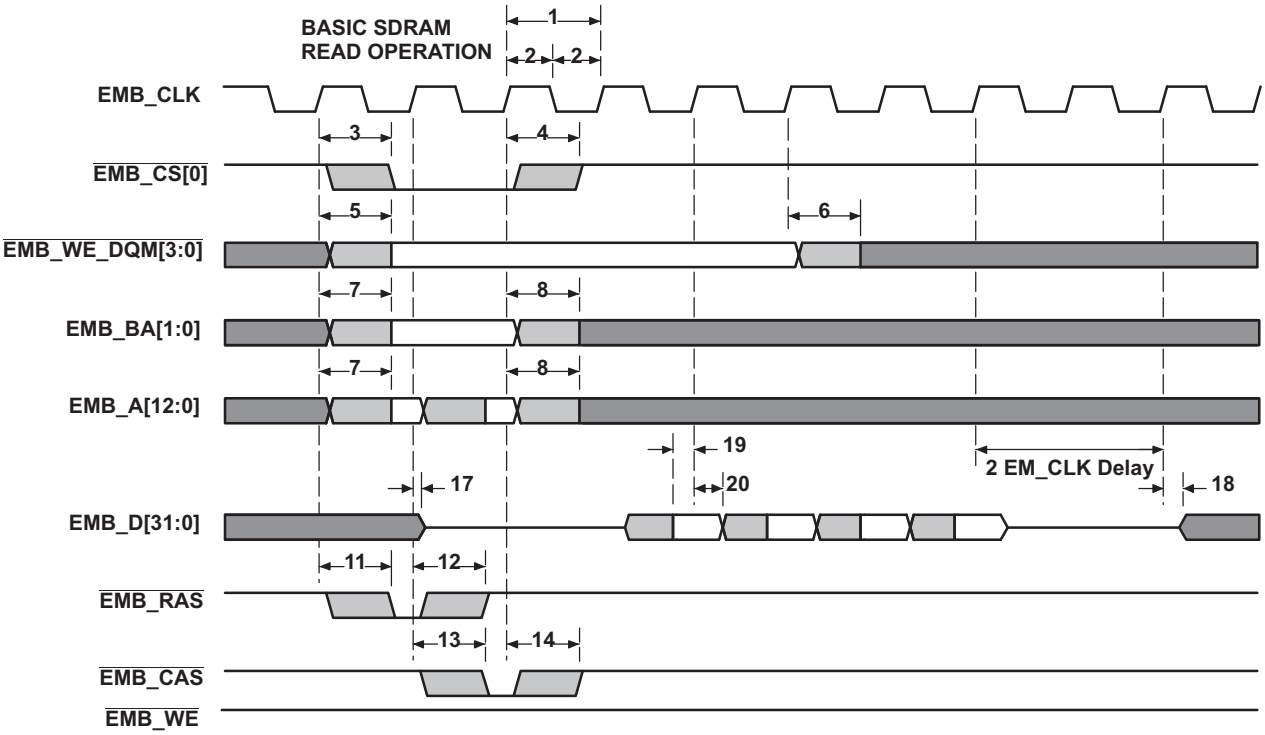

Figure 6-25. EMIFB Basic SDRAM Read Operation

6.12 Memory Protection Units

The MPU performs memory protection checking. It receives requests from a bus master in the system and checks the address against the fixed and programmable regions to see if the access is allowed. If allowed, the transfer is passed unmodified to its output bus (to the targeted address). If the transfer is illegal (fails the protection check) then the MPU does not pass the transfer to the output bus but rather services the transfer internally back to the input bus (to prevent a hang) returning the fault status to the requestor as well as generating an interrupt about the fault. The following features are supported by the MPU:

- Provides memory protection for fixed and programmable address ranges
- Supports multiple programmable address region
- Supports secure and debug access privileges
- Supports read, write, and execute access privileges
- Supports privid(8) associations with ranges
- Generates an interrupt when there is a protection violation, and saves violating transfer parameters
- MMR access is also protected

Table 6-29. MPU1 Configuration Registers

MPU1 BYTE ADDRESS	ACRONYM	REGISTER DESCRIPTION
0x01E1 4000	REVID	Revision ID
0x01E1 4004	CONFIG	Configuration
0x01E1 4010	IRAWSTAT	Interrupt raw status/set
0x01E1 4014	IENSTAT	Interrupt enable status/clear
0x01E1 4018	IENSET	Interrupt enable
0x01E1 401C	IENCLR	Interrupt enable clear
0x01E1 4020 - 0x01E1 41FF	-	Reserved
0x01E1 4200	PROG1_MPSAR	Programmable range 1, start address
0x01E1 4204	PROG1_MPEAR	Programmable range 1, end address
0x01E1 4208	PROG1_MPPA	Programmable range 1, memory page protection attributes
0x01E1 420C - 0x01E1 420F	-	Reserved
0x01E1 4210	PROG2_MPSAR	Programmable range 2, start address
0x01E1 4214	PROG2_MPEAR	Programmable range 2, end address
0x01E1 4218	PROG2_MPPA	Programmable range 2, memory page protection attributes
0x01E1 421C - 0x01E1 421F	-	Reserved
0x01E1 4220	PROG3_MPSAR	Programmable range 3, start address
0x01E1 4224	PROG3_MPEAR	Programmable range 3, end address
0x01E1 4228	PROG3_MPPA	Programmable range 3, memory page protection attributes
0x01E1 422C - 0x01E1 422F	-	Reserved
0x01E1 4230	PROG4_MPSAR	Programmable range 4, start address
0x01E1 4234	PROG4_MPEAR	Programmable range 4, end address
0x01E1 4238	PROG4_MPPA	Programmable range 4, memory page protection attributes
0x01E1 423C - 0x01E1 423F	-	Reserved
0x01E1 4240	PROG5_MPSAR	Programmable range 5, start address
0x01E1 4244	PROG5_MPEAR	Programmable range 5, end address
0x01E1 4248	PROG5_MPPA	Programmable range 5, memory page protection attributes
0x01E1 424C - 0x01E1 424F	-	Reserved
0x01E1 4250	PROG6_MPSAR	Programmable range 6, start address
0x01E1 4254	PROG6_MPEAR	Programmable range 6, end address
0x01E1 4258	PROG6_MPPA	Programmable range 6, memory page protection attributes
0x01E1 425C - 0x01E1 42FF	-	Reserved

Copyright © 2008–2014, Texas Instruments Incorporated

Table 6-29. MPU1 Configuration Registers (continued)

MPU1 BYTE ADDRESS	ACRONYM	REGISTER DESCRIPTION
0x01E14300	FLTADDRR	Fault address
0x01E1 4304	FLTSTAT	Fault status
0x01E1 4308	FLTCLR	Fault clear
0x01E1 430C - 0x01E1 4FFF	-	Reserved

Table 6-30. MPU2 Configuration Registers

MPU2 BYTE ADDRESS	ACRONYM	REGISTER DESCRIPTION
0x01E1 5000	REVID	Revision ID
0x01E1 5004	CONFIG	Configuration
0x01E1 5010	IRAWSTAT	Interrupt raw status/set
0x01E1 5014	IENSTAT	Interrupt enable status/clear
0x01E1 5018	IENSET	Interrupt enable
0x01E1 501C	IENCLR	Interrupt enable clear
0x01E1 5020 - 0x01E1 50FF	-	Reserved
0x01E1 5100	FXD_MPSAR	Fixed range start address
0x01E1 5104	FXD_MPEAR	Fixed range end start address
0x01E1 5108	FXD_MPPA	Fixed range memory page protection attributes
0x01E1 510C - 0x01E1 51FF	-	Reserved
0x01E1 5200	PROG1_MPSAR	Programmable range 1, start address
0x01E1 5204	PROG1_MPEAR	Programmable range 1, end address
0x01E1 5208	PROG1_MPPA	Programmable range 1, memory page protection attributes
0x01E1 520C - 0x01E1 520F	-	Reserved
0x01E1 5210	PROG2_MPSAR	Programmable range 2, start address
0x01E1 5214	PROG2_MPEAR	Programmable range 2, end address
0x01E1 5218	PROG2_MPPA	Programmable range 2, memory page protection attributes
0x01E1 521C - 0x01E1 521F	-	Reserved
0x01E1 5220	PROG3_MPSAR	Programmable range 3, start address
0x01E1 5224	PROG3_MPEAR	Programmable range 3, end address
0x01E1 5228	PROG3_MPPA	Programmable range 3, memory page protection attributes
0x01E1 522C - 0x01E1 522F	-	Reserved
0x01E1 5230	PROG4_MPSAR	Programmable range 4, start address
0x01E1 5234	PROG4_MPEAR	Programmable range 4, end address
0x01E1 5238	PROG4_MPPA	Programmable range 4, memory page protection attributes
0x01E1 523C - 0x01E1 523F	-	Reserved
0x01E1 5240	PROG5_MPSAR	Programmable range 5, start address
0x01E1 5244	PROG5_MPEAR	Programmable range 5, end address
0x01E1 5248	PROG5_MPPA	Programmable range 5, memory page protection attributes
0x01E1 524C - 0x01E1 524F	-	Reserved
0x01E1 5250	PROG6_MPSAR	Programmable range 6, start address
0x01E1 5254	PROG6_MPEAR	Programmable range 6, end address
0x01E1 5258	PROG6_MPPA	Programmable range 6, memory page protection attributes
0x01E1 525C - 0x01E1 525F	-	Reserved
0x01E1 5260	PROG7_MPSAR	Programmable range 7, start address
0x01E1 5264	PROG7_MPEAR	Programmable range 7, end address
0x01E1 5268	PROG7_MPPA	Programmable range 7, memory page protection attributes
0x01E1 526C - 0x01E1 526F	-	Reserved

Copyright © 2008–2014, Texas Instruments Incorporated

Table 6-30. MPU2 Configuration Registers (continued)

MPU2 BYTE ADDRESS	ACRONYM	REGISTER DESCRIPTION
0x01E1 5270	PROG8_MPSAR	Programmable range 8, start address
0x01E1 5274	PROG8_MPEAR	Programmable range 8, end address
0x01E1 5278	PROG8_MPPA	Programmable range 8, memory page protection attributes
0x01E1 527C - 0x01E1 527F	-	Reserved
0x01E1 5280	PROG9_MPSAR	Programmable range 9, start address
0x01E1 5284	PROG9_MPEAR	Programmable range 9, end address
0x01E1 5288	PROG9_MPPA	Programmable range 9, memory page protection attributes
0x01E1 528C - 0x01E1 528F	-	Reserved
0x01E1 5290	PROG10_MPSAR	Programmable range 10, start address
0x01E1 5294	PROG10_MPEAR	Programmable range 10, end address
0x01E1 5298	PROG10_MPPA	Programmable range 10, memory page protection attributes
0x01E1 529C - 0x01E1 529F	-	Reserved
0x01E1 52A0	PROG11_MPSAR	Programmable range 11, start address
0x01E1 52A4	PROG11_MPEAR	Programmable range 11, end address
0x01E1 52A8	PROG11_MPPA	Programmable range 11, memory page protection attributes
0x01E1 52AC - 0x01E1 52AF	-	Reserved
0x01E1 52B0	PROG12_MPSAR	Programmable range 12, start address
0x01E1 52B4	PROG12_MPEAR	Programmable range 12, end address
0x01E1 52B8	PROG12_MPPA	Programmable range 12, memory page protection attributes
0x01E1 52BC - 0x01E1 52FF	-	Reserved
0x01E1 5300	FLTADDRR	Fault address
0x01E1 5304	FLTSTAT	Fault status
0x01E1 5308	FLTCLR	Fault clear
0x01E1 530C - 0x01E1 5FFF	-	Reserved

Copyright © 2008–2014, Texas Instruments Incorporated

6.13 MMC / SD / SDIO (MMCSD)

6.13.1 MMCSD Peripheral Description

The C6745/6747 includes an MMCSD controller which is compliant with MMC V4.0, Secure Digital Part 1 Physical Layer Specification V1.1 and Secure Digital Input Output (SDIO) V2.0 specifications.

The MMC/SD Controller has following features:

- MultiMediaCard (MMC) support
- Secure Digital (SD) Memory Card support
- MMC/SD protocol support
- SD high capacity support
- SDIO protocol support
- Programmable clock frequency
- 512 bit Read/Write FIFO to lower system overhead
- Slave EDMA transfer capability

The C6745/6747 MMC/SD Controller does not support SPI mode.

6.13.2 MMCSD Peripheral Register Description(s)

Table 6-31. Multimedia Card/Secure Digital (MMC/SD) Card Controller Registers

BYTE ADDRESS	ACRONYM	REGISTER DESCRIPTION
0x01C4 0000	MMCCTL	MMC Control Register
0x01C4 0004	MMCCLK	MMC Memory Clock Control Register
0x01C4 0008	MMCST0	MMC Status Register 0
0x01C4 000C	MMCST1	MMC Status Register 1
0x01C4 0010	MMCIM	MMC Interrupt Mask Register
0x01C4 0014	MMCTOR	MMC Response Time-Out Register
0x01C4 0018	MMCTOD	MMC Data Read Time-Out Register
0x01C4 001C	MMCBLEN	MMC Block Length Register
0x01C4 0020	MMCNBLK	MMC Number of Blocks Register
0x01C4 0024	MMCNBLC	MMC Number of Blocks Counter Register
0x01C4 0028	MMCDRR	MMC Data Receive Register
0x01C4 002C	MMCDXR	MMC Data Transmit Register
0x01C4 0030	MMCCMD	MMC Command Register
0x01C4 0034	MMCARGHL	MMC Argument Register
0x01C4 0038	MMCRSP01	MMC Response Register 0 and 1
0x01C4 003C	MMCRSP23	MMC Response Register 2 and 3
0x01C4 0040	MMCRSP45	MMC Response Register 4 and 5
0x01C4 0044	MMCRSP67	MMC Response Register 6 and 7
0x01C4 0048	MMCDRSP	MMC Data Response Register
0x01C4 0050	MMCCIDX	MMC Command Index Register
0x01C4 0064	SDIOCTL	SDIO Control Register
0x01C4 0068	SDIOST0	SDIO Status Register 0
0x01C4 006C	SDIOIEN	SDIO Interrupt Enable Register
0x01C4 0070	SDIOIST	SDIO Interrupt Status Register
0x01C4 0074	MMCFIFOCTL	MMC FIFO Control Register

Copyright © 2008–2014, Texas Instruments Incorporated

6.13.3 MMC/SD Electrical Data/Timing

Table 6-32. Timing Requirements for MMC/SD Module (see Figure 6-27 and Figure 6-29)

No.	PARAMETER		MIN	MAX	UNIT
1	$t_{su(CMDV-CLKH)}$	Setup time, MMCSD_CMD valid before MMCSD_CLK high	3.2		ns
2	$t_{h(CLKH-CMDV)}$	Hold time, MMCSD_CMD valid after MMCSD_CLK high	1.5		ns
3	$t_{su(DATV-CLKH)}$	Setup time, MMCSD_DATx valid before MMCSD_CLK high	3.2		ns
4	$t_{h(CLKH-DATV)}$	Hold time, MMCSD_DATx valid after MMCSD_CLK high	1.5		ns

Table 6-33. Switching Characteristics Over Recommended Operating Conditions for MMC/SD Module (see Figure 6-26 through Figure 6-29)

No.	PARAMETER		MIN	MAX	UNIT
7	$f_{(CLK)}$	Operating frequency, MMCSD_CLK	0	52	MHz
8	$f_{(CLK_ID)}$	Identification mode frequency, MMCSD_CLK	0	400	KHz
9	$t_{W(CLKL)}$	Pulse width, MMCSD_CLK low	6.5		ns
10	$t_{W(CLKH)}$	Pulse width, MMCSD_CLK high	6.5		ns
11	$t_{r(CLK)}$	Rise time, MMCSD_CLK		3	ns
12	$t_{f(CLK)}$	Fall time, MMCSD_CLK		3	ns
13	$t_{d(CLKL-CMD)}$	Delay time, MMCSD_CLK low to MMCSD_CMD transition	-4.5	2.5	ns
14	$t_{d(CLKL-DAT)}$	Delay time, MMCSD_CLK low to MMCSD_DATx transition	-4.5	2.5	ns

Copyright © 2008–2014, Texas Instruments Incorporated

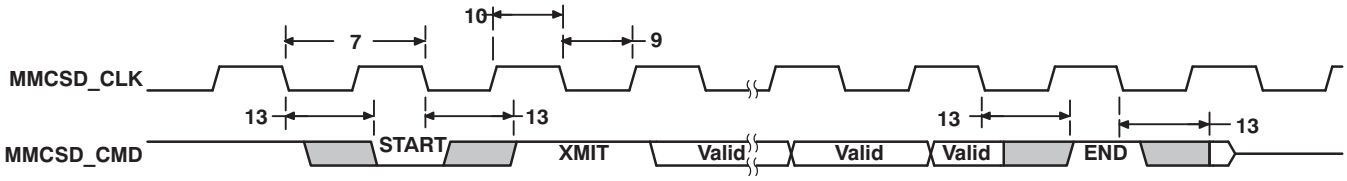

Figure 6-26. MMC/SD Host Command Timing

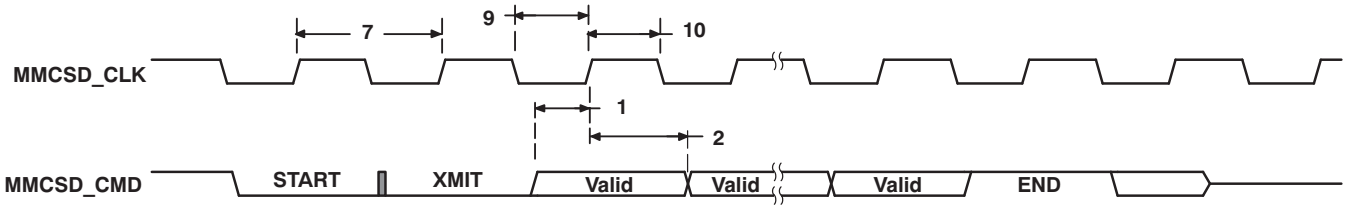

Figure 6-27. MMC/SD Card Response Timing

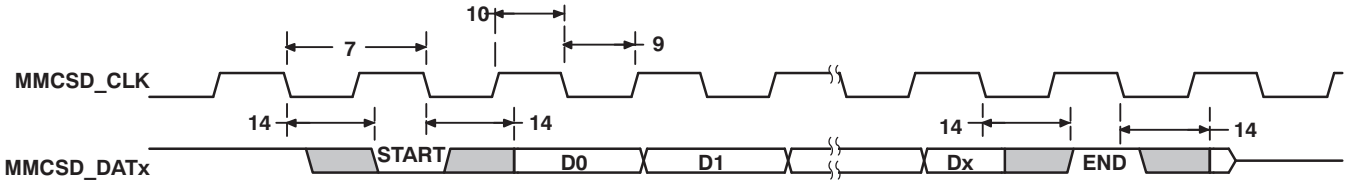

Figure 6-28. MMC/SD Host Write Timing

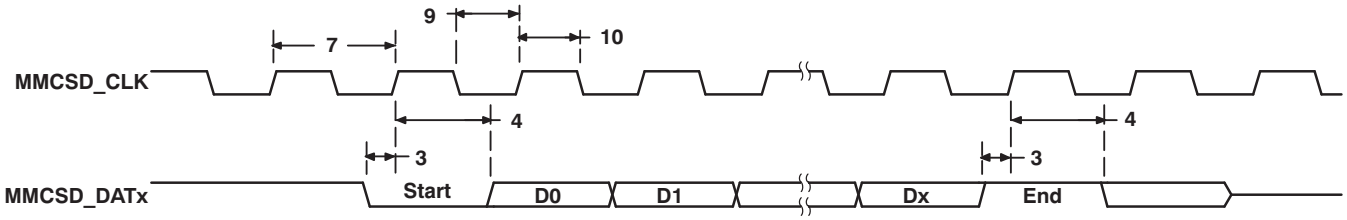

Figure 6-29. MMC/SD Host Read and Card CRC Status Timing

6.14 Ethernet Media Access Controller (EMAC)

The Ethernet Media Access Controller (EMAC) provides an efficient interface between C6745/6747 and the network. The EMAC supports both 10Base-T and 100Base-TX, or 10 Mbits/second (Mbps) and 100 Mbps in either half- or full-duplex mode, with hardware flow control and quality of service (QOS) support.

The EMAC controls the flow of packet data from the C6745/6747 device to the PHY. The MDIO module controls PHY configuration and status monitoring.

Both the EMAC and the MDIO modules interface to the C6745/6747 device through a custom interface that allows efficient data transmission and reception. This custom interface is referred to as the EMAC control module, and is considered integral to the EMAC/MDIO peripheral. The control module is also used to multiplex and control interrupts.

6.14.1 EMAC Peripheral Register Description(s)

Table 6-34. Ethernet Media Access Controller (EMAC) Registers

BYTE ADDRESS	ACRONYM	REGISTER DESCRIPTION
0x01E2 3000	TXREV	Transmit Revision Register
0x01E2 3004	TXCONTROL	Transmit Control Register
0x01E2 3008	TXTEARDOWN	Transmit Teardown Register
0x01E2 3010	RXREV	Receive Revision Register
0x01E2 3014	RXCONTROL	Receive Control Register
0x01E2 3018	RXTEARDOWN	Receive Teardown Register
0x01E2 3080	TXINTSTATRAW	Transmit Interrupt Status (Unmasked) Register
0x01E2 3084	TXINTSTATMASKED	Transmit Interrupt Status (Masked) Register
0x01E2 3088	TXINTMASKSET	Transmit Interrupt Mask Set Register
0x01E2 308C	TXINTMASKCLEAR	Transmit Interrupt Clear Register
0x01E2 3090	MACINVECTOR	MAC Input Vector Register
0x01E2 3094	MACEOIVECTOR	MAC End Of Interrupt Vector Register
0x01E2 30A0	RXINTSTATRAW	Receive Interrupt Status (Unmasked) Register
0x01E2 30A4	RXINTSTATMASKED	Receive Interrupt Status (Masked) Register
0x01E2 30A8	RXINTMASKSET	Receive Interrupt Mask Set Register
0x01E2 30AC	RXINTMASKCLEAR	Receive Interrupt Mask Clear Register
0x01E2 30B0	MACINTSTATRAW	MAC Interrupt Status (Unmasked) Register
0x01E2 30B4	MACINTSTATMASKED	MAC Interrupt Status (Masked) Register
0x01E2 30B8	MACINTMASKSET	MAC Interrupt Mask Set Register
0x01E2 30BC	MACINTMASKCLEAR	MAC Interrupt Mask Clear Register
0x01E2 3100	RXMBPENABLE	Receive Multicast/Broadcast/Promiscuous Channel Enable Register
0x01E2 3104	RXUNICASTSET	Receive Unicast Enable Set Register
0x01E2 3108	RXUNICASTCLEAR	Receive Unicast Clear Register
0x01E2 310C	RXMAXLEN	Receive Maximum Length Register
0x01E2 3110	RXBUFFEROFFSET	Receive Buffer Offset Register
0x01E2 3114	RXFILTERLOWTHRESH	Receive Filter Low Priority Frame Threshold Register
0x01E2 3120	RX0FLOWTHRESH	Receive Channel 0 Flow Control Threshold Register
0x01E2 3124	RX1FLOWTHRESH	Receive Channel 1 Flow Control Threshold Register
0x01E2 3128	RX2FLOWTHRESH	Receive Channel 2 Flow Control Threshold Register
0x01E2 312C	RX3FLOWTHRESH	Receive Channel 3 Flow Control Threshold Register
0x01E2 3130	RX4FLOWTHRESH	Receive Channel 4 Flow Control Threshold Register
0x01E2 3134	RX5FLOWTHRESH	Receive Channel 5 Flow Control Threshold Register
0x01E2 3138	RX6FLOWTHRESH	Receive Channel 6 Flow Control Threshold Register
0x01E2 313C	RX7FLOWTHRESH	Receive Channel 7 Flow Control Threshold Register

Copyright © 2008–2014, Texas Instruments Incorporated

Table 6-34. Ethernet Media Access Controller (EMAC) Registers (continued)

BYTE ADDRESS	ACRONYM	REGISTER DESCRIPTION
0x01E2 3140	RX0FREEBUFFER	Receive Channel 0 Free Buffer Count Register
0x01E2 3144	RX1FREEBUFFER	Receive Channel 1 Free Buffer Count Register
0x01E2 3148	RX2FREEBUFFER	Receive Channel 2 Free Buffer Count Register
0x01E2 314C	RX3FREEBUFFER	Receive Channel 3 Free Buffer Count Register
0x01E2 3150	RX4FREEBUFFER	Receive Channel 4 Free Buffer Count Register
0x01E2 3154	RX5FREEBUFFER	Receive Channel 5 Free Buffer Count Register
0x01E2 3158	RX6FREEBUFFER	Receive Channel 6 Free Buffer Count Register
0x01E2 315C	RX7FREEBUFFER	Receive Channel 7 Free Buffer Count Register
0x01E2 3160	MACCONTROL	MAC Control Register
0x01E2 3164	MACSTATUS	MAC Status Register
0x01E2 3168	EMCONTROL	Emulation Control Register
0x01E2 316C	FIFOCONTROL	FIFO Control Register
0x01E2 3170	MACCONFIG	MAC Configuration Register
0x01E2 3174	SOFTRESET	Soft Reset Register
0x01E2 31D0	MACSRCADDRLO	MAC Source Address Low Bytes Register
0x01E2 31D4	MACSRCADDRHI	MAC Source Address High Bytes Register
0x01E2 31D8	MACHASH1	MAC Hash Address Register 1
0x01E2 31DC	MACHASH2	MAC Hash Address Register 2
0x01E2 31E0	BOFFTEST	Back Off Test Register
0x01E2 31E4	TPACETEST	Transmit Pacing Algorithm Test Register
0x01E2 31E8	RXPAUSE	Receive Pause Timer Register
0x01E2 31EC	TXPAUSE	Transmit Pause Timer Register
0x01E2 3200 - 0x01E2 32FC	(see Table 6-35)	EMAC Statistics Registers
0x01E2 3500	MACADDRLO	MAC Address Low Bytes Register, Used in Receive Address Matching
0x01E2 3504	MACADDRHI	MAC Address High Bytes Register, Used in Receive Address Matching
0x01E2 3508	MACINDEX	MAC Index Register
0x01E2 3600	TX0HDP	Transmit Channel 0 DMA Head Descriptor Pointer Register
0x01E2 3604	TX1HDP	Transmit Channel 1 DMA Head Descriptor Pointer Register
0x01E2 3608	TX2HDP	Transmit Channel 2 DMA Head Descriptor Pointer Register
0x01E2 360C	TX3HDP	Transmit Channel 3 DMA Head Descriptor Pointer Register
0x01E2 3610	TX4HDP	Transmit Channel 4 DMA Head Descriptor Pointer Register
0x01E2 3614	TX5HDP	Transmit Channel 5 DMA Head Descriptor Pointer Register
0x01E2 3618	TX6HDP	Transmit Channel 6 DMA Head Descriptor Pointer Register
0x01E2 361C	TX7HDP	Transmit Channel 7 DMA Head Descriptor Pointer Register
0x01E2 3620	RX0HDP	Receive Channel 0 DMA Head Descriptor Pointer Register
0x01E2 3624	RX1HDP	Receive Channel 1 DMA Head Descriptor Pointer Register
0x01E2 3628	RX2HDP	Receive Channel 2 DMA Head Descriptor Pointer Register
0x01E2 362C	RX3HDP	Receive Channel 3 DMA Head Descriptor Pointer Register
0x01E2 3630	RX4HDP	Receive Channel 4 DMA Head Descriptor Pointer Register
0x01E2 3634	RX5HDP	Receive Channel 5 DMA Head Descriptor Pointer Register
0x01E2 3638	RX6HDP	Receive Channel 6 DMA Head Descriptor Pointer Register
0x01E2 363C	RX7HDP	Receive Channel 7 DMA Head Descriptor Pointer Register
0x01E2 3640	TX0CP	Transmit Channel 0 Completion Pointer Register
0x01E2 3644	TX1CP	Transmit Channel 1 Completion Pointer Register
0x01E2 3648	TX2CP	Transmit Channel 2 Completion Pointer Register
0x01E2 364C	TX3CP	Transmit Channel 3 Completion Pointer Register
0x01E2 3650	TX4CP	Transmit Channel 4 Completion Pointer Register

Copyright © 2008–2014, Texas Instruments Incorporated

Table 6-34. Ethernet Media Access Controller (EMAC) Registers (continued)

BYTE ADDRESS	ACRONYM	REGISTER DESCRIPTION
0x01E2 3654	TX5CP	Transmit Channel 5 Completion Pointer Register
0x01E2 3658	TX6CP	Transmit Channel 6 Completion Pointer Register
0x01E2 365C	TX7CP	Transmit Channel 7 Completion Pointer Register
0x01E2 3660	RX0CP	Receive Channel 0 Completion Pointer Register
0x01E2 3664	RX1CP	Receive Channel 1 Completion Pointer Register
0x01E2 3668	RX2CP	Receive Channel 2 Completion Pointer Register
0x01E2 366C	RX3CP	Receive Channel 3 Completion Pointer Register
0x01E2 3670	RX4CP	Receive Channel 4 Completion Pointer Register
0x01E2 3674	RX5CP	Receive Channel 5 Completion Pointer Register
0x01E2 3678	RX6CP	Receive Channel 6 Completion Pointer Register
0x01E2 367C	RX7CP	Receive Channel 7 Completion Pointer Register

Table 6-35. EMAC Statistics Registers

BYTE ADDRESS	ACRONYM	REGISTER DESCRIPTION
0x01E2 3200	RXGOODFRAMES	Good Receive Frames Register
0x01E2 3204	RXBCASTFRAMES	Broadcast Receive Frames Register (Total number of good broadcast frames received)
0x01E2 3208	RXMCASTFRAMES	Multicast Receive Frames Register (Total number of good multicast frames received)
0x01E2 320C	RXPAUSEFRAMES	Pause Receive Frames Register
0x01E2 3210	RXCRCERRORS	Receive CRC Errors Register (Total number of frames received with CRC errors)
0x01E2 3214	RXALIGNCODEERRORS	Receive Alignment/Code Errors Register (Total number of frames received with alignment/code errors)
0x01E2 3218	RXOVERSIZED	Receive Oversized Frames Register (Total number of oversized frames received)
0x01E2 321C	RXJABBER	Receive Jabber Frames Register (Total number of jabber frames received)
0x01E2 3220	RXUNDERSIZED	Receive Undersized Frames Register (Total number of undersized frames received)
0x01E2 3224	RXFRAGMENTS	Receive Frame Fragments Register
0x01E2 3228	RXFILTERED	Filtered Receive Frames Register
0x01E2 322C	RXQOSFILTERED	Received QOS Filtered Frames Register
0x01E2 3230	RXOCTETS	Receive Octet Frames Register (Total number of received bytes in good frames)
0x01E2 3234	TXGOODFRAMES	Good Transmit Frames Register (Total number of good frames transmitted)
0x01E2 3238	TXBCASTFRAMES	Broadcast Transmit Frames Register
0x01E2 323C	TXMCASTFRAMES	Multicast Transmit Frames Register
0x01E2 3240	TXPAUSEFRAMES	Pause Transmit Frames Register
0x01E2 3244	TXDEFERRED	Deferred Transmit Frames Register
0x01E2 3248	TXCOLLISION	Transmit Collision Frames Register
0x01E2 324C	TXSINGLECOLL	Transmit Single Collision Frames Register
0x01E2 3250	TXMULTICOLL	Transmit Multiple Collision Frames Register
0x01E2 3254	TXEXCESSIVECOLL	Transmit Excessive Collision Frames Register
0x01E2 3258	TXLATECOLL	Transmit Late Collision Frames Register
0x01E2 325C	TXUNDERRUN	Transmit Underrun Error Register
0x01E2 3260	TXCARRIERSENSE	Transmit Carrier Sense Errors Register
0x01E2 3264	TXOCTETS	Transmit Octet Frames Register

Copyright © 2008–2014, Texas Instruments Incorporated

Table 6-35. EMAC Statistics Registers (continued)

BYTE ADDRESS	ACRONYM	REGISTER DESCRIPTION
0x01E2 3268	FRAME64	Transmit and Receive 64 Octet Frames Register
0x01E2 326C	FRAME65T127	Transmit and Receive 65 to 127 Octet Frames Register
0x01E2 3270	FRAME128T255	Transmit and Receive 128 to 255 Octet Frames Register
0x01E2 3274	FRAME256T511	Transmit and Receive 256 to 511 Octet Frames Register
0x01E2 3278	FRAME512T1023	Transmit and Receive 512 to 1023 Octet Frames Register
0x01E2 327C	FRAME1024TUP	Transmit and Receive 1024 to 1518 Octet Frames Register
0x01E2 3280	NETOCTETS	Network Octet Frames Register
0x01E2 3284	RXSOFOVERRUNS	Receive FIFO or DMA Start of Frame Overruns Register
0x01E2 3288	RXMOFOVERRUNS	Receive FIFO or DMA Middle of Frame Overruns Register
0x01E2 328C	RXDMAOVERRUNS	Receive DMA Start of Frame and Middle of Frame Overruns Register

Table 6-36. EMAC Control Module Registers

BYTE ADDRESS	ACRONYM	REGISTER DESCRIPTION
0x01E2 2000	REV	EMAC Control Module Revision Register
0x01E2 2004	SOFTRESET	EMAC Control Module Software Reset Register
0x01E2 200C	INTCONTROL	EMAC Control Module Interrupt Control Register
0x01E2 2010	C0RXTHRESHEN	EMAC Control Module Interrupt Core 0 Receive Threshold Interrupt Enable Register
0x01E2 2014	C0RXEN	EMAC Control Module Interrupt Core 0 Receive Interrupt Enable Register
0x01E2 2018	C0TXEN	EMAC Control Module Interrupt Core 0 Transmit Interrupt Enable Register
0x01E2 201C	C0MISCEN	EMAC Control Module Interrupt Core 0 Miscellaneous Interrupt Enable Register
0x01E2 2020	C1RXTHRESHEN	EMAC Control Module Interrupt Core 1 Receive Threshold Interrupt Enable Register
0x01E2 2024	C1RXEN	EMAC Control Module Interrupt Core 1 Receive Interrupt Enable Register
0x01E2 2028	C1TXEN	EMAC Control Module Interrupt Core 1 Transmit Interrupt Enable Register
0x01E2 202C	C1MISCEN	EMAC Control Module Interrupt Core 1 Miscellaneous Interrupt Enable Register
0x01E2 2030	C2RXTHRESHEN	EMAC Control Module Interrupt Core 2 Receive Threshold Interrupt Enable Register
0x01E2 2034	C2RXEN	EMAC Control Module Interrupt Core 2 Receive Interrupt Enable Register
0x01E2 2038	C2TXEN	EMAC Control Module Interrupt Core 2 Transmit Interrupt Enable Register
0x01E2 203C	C2MISCEN	EMAC Control Module Interrupt Core 2 Miscellaneous Interrupt Enable Register
0x01E2 2040	C0RXTHRESHSTAT	EMAC Control Module Interrupt Core 0 Receive Threshold Interrupt Status Register
0x01E2 2044	C0RXSTAT	EMAC Control Module Interrupt Core 0 Receive Interrupt Status Register
0x01E2 2048	C0TXSTAT	EMAC Control Module Interrupt Core 0 Transmit Interrupt Status Register
0x01E2 204C	C0MISCSTAT	EMAC Control Module Interrupt Core 0 Miscellaneous Interrupt Status Register
0x01E2 2050	C1RXTHRESHSTAT	EMAC Control Module Interrupt Core 1 Receive Threshold Interrupt Status Register
0x01E2 2054	C1RXSTAT	EMAC Control Module Interrupt Core 1 Receive Interrupt Status Register
0x01E2 2058	C1TXSTAT	EMAC Control Module Interrupt Core 1 Transmit Interrupt Status Register
0x01E2 205C	C1MISCSTAT	EMAC Control Module Interrupt Core 1 Miscellaneous Interrupt Status Register
0x01E2 2060	C2RXTHRESHSTAT	EMAC Control Module Interrupt Core 2 Receive Threshold Interrupt Status Register
0x01E2 2064	C2RXSTAT	EMAC Control Module Interrupt Core 2 Receive Interrupt Status Register
0x01E2 2068	C2TXSTAT	EMAC Control Module Interrupt Core 2 Transmit Interrupt Status Register
0x01E2 206C	C2MISCSTAT	EMAC Control Module Interrupt Core 2 Miscellaneous Interrupt Status Register
0x01E2 2070	C0RXIMAX	EMAC Control Module Interrupt Core 0 Receive Interrupts Per Millisecond Register
0x01E2 2074	C0TXIMAX	EMAC Control Module Interrupt Core 0 Transmit Interrupts Per Millisecond Register
0x01E2 2078	C1RXIMAX	EMAC Control Module Interrupt Core 1 Receive Interrupts Per Millisecond Register
0x01E2 207C	C1TXIMAX	EMAC Control Module Interrupt Core 1 Transmit Interrupts Per Millisecond Register
0x01E2 2080	C2RXIMAX	EMAC Control Module Interrupt Core 2 Receive Interrupts Per Millisecond Register
0x01E2 2084	C2TXIMAX	EMAC Control Module Interrupt Core 2 Transmit Interrupts Per Millisecond Register

Copyright © 2008–2014, Texas Instruments Incorporated

Table 6-37. EMAC Control Module RAM

BYTE ADRESS	REGISTER DESCRIPTION
0x01E2 0000 - 0x01E2 1FFF	EMAC Local Buffer Descriptor Memory

Table 6-38. RMII Timing Requirements

No.	PARAMETER		MIN	TYP	MAX	UNIT
1	tc(REFCLK)	Cycle Time, RMII_MHZ_50_CLK		20		ns
2	tw(REFCLKH)	Pulse Width, RMII_MHZ_50_CLK High	7		13	ns
3	tw(REFCLKL)	Pulse Width, RMII_MHZ_50_CLK Low	7		13	ns
6	tsu(RXD-REFCLK)	Input Setup Time, RXD Valid before RMII_MHZ_50_CLK High	4			ns
7	th(REFCLK-RXD)	Input Hold Time, RXD Valid after RMII_MHZ_50_CLK High	2			ns
8	tsu(CRSDV-REFCLK)	Input Setup Time, CRSDV Valid before RMII_MHZ_50_CLK High	4			ns
9	th(REFCLK-CRSDV)	Input Hold Time, CRSDV Valid after RMII_MHZ_50_CLK High	2			ns
10	tsu(RXER-REFCLK)	Input Setup Time, RXER Valid before RMII_MHZ_50_CLK High	4			ns
11	th(REFCLKR-RXER)	Input Hold Time, RXER Valid after RMII_MHZ_50_CLK High	2			ns

Note: Per the RMII industry specification, the RMII reference clock (RMII_MHZ_50_CLK) must have jitter tolerance of 50 ppm or less.

Table 6-39. RMII Switching Characteristics

No.	PARAMETER		MIN	TYP	MAX	UNIT
4	td(REFCLK-TXD)	Output Delay Time, RMII_MHZ_50_CLK High to TXD Valid	2.5		13	ns
5	td(REFCLK-TXEN)	Output Delay Time, RMII_MHZ_50_CLK High to TXEN Valid	2.5		13	ns

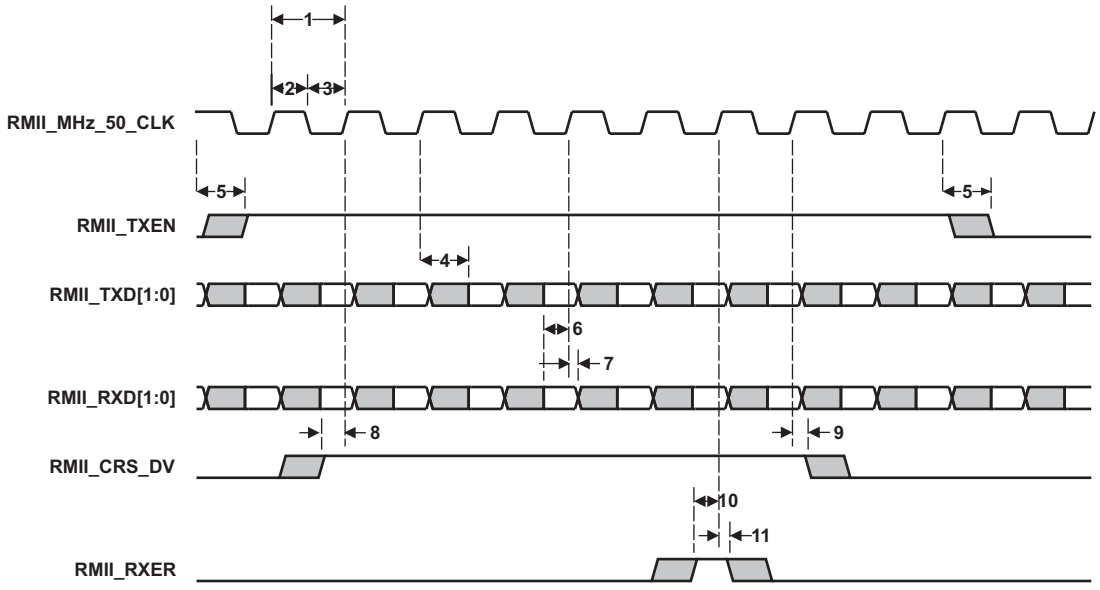

Figure 6-30. RMII Timing Diagram

Copyright © 2008–2014, Texas Instruments Incorporated

6.15 Management Data Input/Output (MDIO)

The Management Data Input/Output (MDIO) module continuously polls all 32 MDIO addresses in order to enumerate all PHY devices in the system.

The Management Data Input/Output (MDIO) module implements the 802.3 serial management interface to interrogate and control Ethernet PHY(s) using a shared two-wire bus. Host software uses the MDIO module to configure the auto-negotiation parameters of each PHY attached to the EMAC, retrieve the negotiation results, and configure required parameters in the EMAC module for correct operation. The module is designed to allow almost transparent operation of the MDIO interface, with very little maintenance from the core processor. Only one PHY may be connected at any given time.

For more detailed information on the MDIO peripheral, see the *TMS320C6745/C6747 DSP Peripherals Overview Reference Guide.* (SPRUFK9).

6.15.1 MDIO Registers

For a list of supported MDIO registers see Table 6-40 [MDIO Registers].

Table 6-40. MDIO Register Memory Map

BYTE ADDRESS	ACRONYM	REGISTER DESCRIPTION
0x01E2 4000	REV	Revision Identification Register
0x01E2 4004	CONTROL	MDIO Control Register
0x01E2 4008	ALIVE	MDIO PHY Alive Status Register
0x01E2 400C	LINK	MDIO PHY Link Status Register
0x01E2 4010	LINKINTRAW	MDIO Link Status Change Interrupt (Unmasked) Register
0x01E2 4014	LINKINTMASKED	MDIO Link Status Change Interrupt (Masked) Register
0x01E2 4018	–	Reserved
0x01E2 4020	USERINTRAW	MDIO User Command Complete Interrupt (Unmasked) Register
0x01E2 4024	USERINTMASKED	MDIO User Command Complete Interrupt (Masked) Register
0x01E2 4028	USERINTMASKSET	MDIO User Command Complete Interrupt Mask Set Register
0x01E2 402C	USERINTMASKCLEAR	MDIO User Command Complete Interrupt Mask Clear Register
0x01E2 4030 - 0x01E2 407C	–	Reserved
0x01E2 4080	USERACCESS0	MDIO User Access Register 0
0x01E2 4084	USERPHYSEL0	MDIO User PHY Select Register 0
0x01E2 4088	USERACCESS1	MDIO User Access Register 1
0x01E2 408C	USERPHYSEL1	MDIO User PHY Select Register 1
0x01E2 4090 - 0x01E2 47FF	–	Reserved

Copyright © 2008–2014, Texas Instruments Incorporated

6.15.2 Management Data Input/Output (MDIO) Electrical Data/Timing

Table 6-41. Timing Requirements for MDIO Input (see Figure 6-31 and Figure 6-32)

No.	PARAMETER		MIN	MAX	UNIT
1	$t_{c(MDIO_CLK)}$	Cycle time, MDIO_CLK	400		ns
2	$t_{w(MDIO_CLK)}$	Pulse duration, MDIO_CLK high/low	180		ns
3	$t_{t(MDIO_CLK)}$	Transition time, MDIO_CLK		5	ns
4	$t_{su(MDIO-MDIO_CLKH)}$	Setup time, MDIO_D data input valid before MDIO_CLK high	10		ns
5	$t_{h(MDIO_CLKH-MDIO)}$	Hold time, MDIO_D data input valid after MDIO_CLK high	0		ns

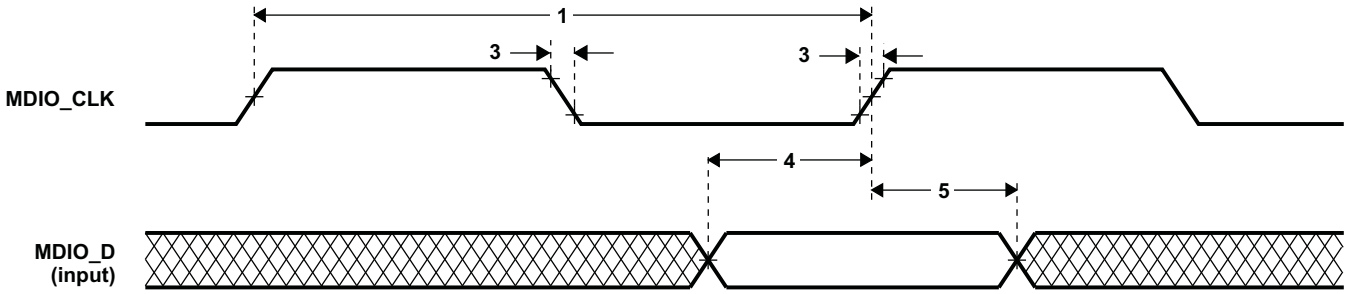

Figure 6-31. MDIO Input Timing

Table 6-42. Switching Characteristics Over Recommended Operating Conditions for MDIO Output (see Figure 6-32)

No.	PARAMETER		MIN	MAX	UNIT
7	$t_{d(MDIO_CLKL-MDIO)}$	Delay time, MDIO_CLK low to MDIO_D data output valid	0	100	ns

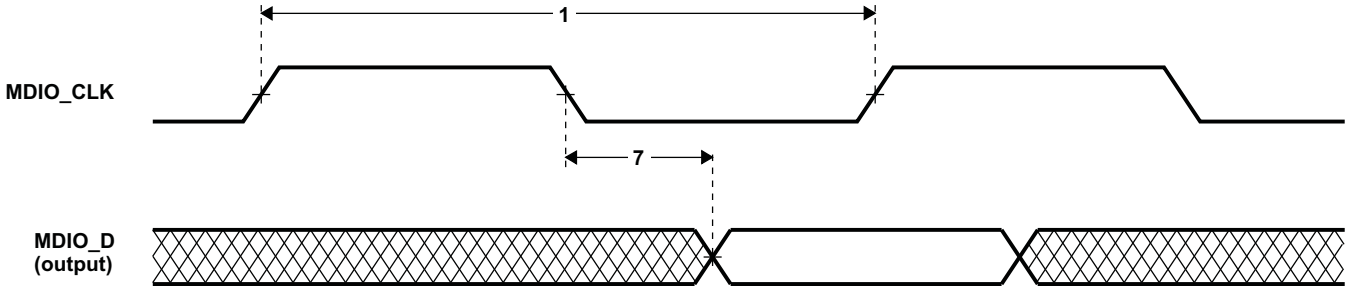

Figure 6-32. MDIO Output Timing

Copyright © 2008–2014, Texas Instruments Incorporated

6.16 Multichannel Audio Serial Ports (McASP0, McASP1, and McASP2)

The McASP serial port is specifically designed for multichannel audio applications. Its key features are:

- Flexible clock and frame sync generation logic and on-chip dividers
- Up to sixteen transmit or receive data pins and serializers
- Large number of serial data format options, including:
  - TDM Frames with 2 to 32 time slots per frame (periodic) or 1 slot per frame (burst)
  - Time slots of 8,12,16, 20, 24, 28, and 32 bits
  - First bit delay 0, 1, or 2 clocks
  - MSB or LSB first bit order
  - Left- or right-aligned data words within time slots
- DIT Mode (optional) with 384-bit Channel Status and 384-bit User Data registers
- Extensive error checking and mute generation logic
- All unused pins GPIO-capable

Additionally, while the C674x McASP modules are backward compatible with the McASP on previous devices; the C674x McASP includes the following new features:

- Transmit & Receive FIFO Buffers for each McASP. Allows the McASP to operate at a higher sample rate by making it more tolerant to DMA latency.
- Dynamic Adjustment of Clock Dividers
  - Clock Divider Value may be changed without resetting the McASP

The three McASPs on the C6745/6747 are configured with the following options:

Table 6-43. C6745/6747 McASP Configurations(1)

Module	Serializers	AFIFO	DIT	C6745/6747 Pins
McASP0	16	64 Word RX 64 Word TX	N	AXR0[15:0], AHCLKR0, ACLKR0, AFSR0, AHCLKX0, ACLKX0, AFSX0, AMUTE0
McASP1	12	64 Word RX 64 Word TX	N	AXR1[11:10], AXR1[8:0], AHCLKR1, ACLKR1, AFSR1, AHCLKX1, ACLKX1, AFSX1, AMUTE1
McASP2	4	16 Word RX 16 Word TX	Y	AXR2[3:0], AHCLKR2, ACLKR2, AFSR2, AHCLKX2, ACLKX2, AFSX2, AMUTE2

(1) Pins available are the maximum number of pins that may be configured for a particular McASP; not including pin multiplexing.

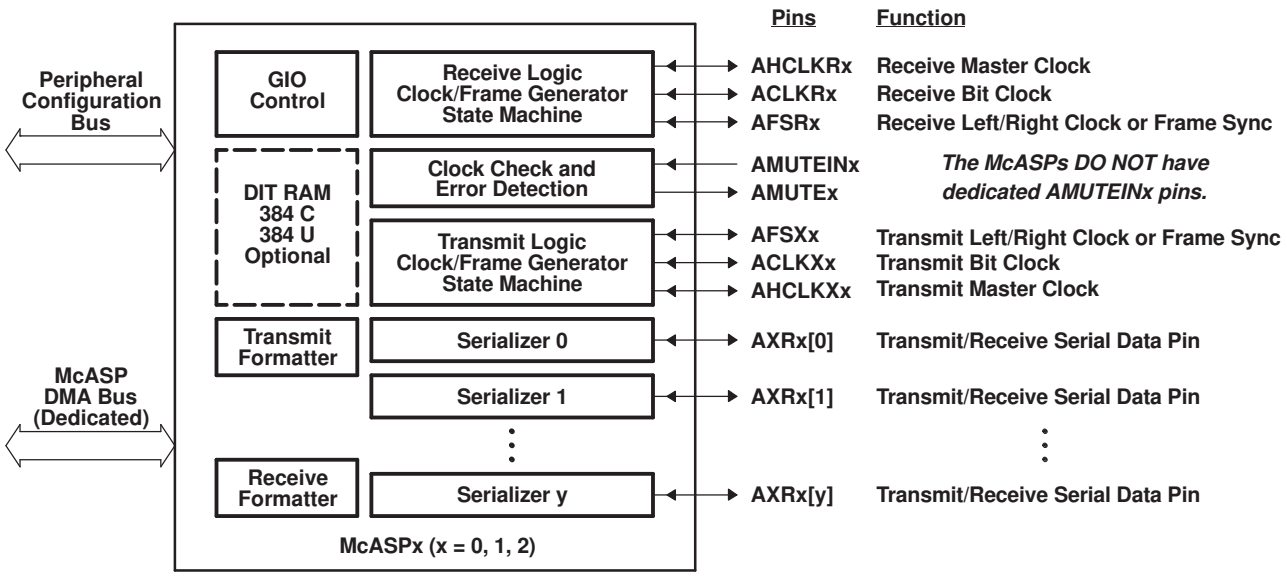

Figure 6-33. McASP Block Diagram

6.16.1 McASP Peripheral Registers Description(s)

Registers for the McASP are summarized in Table 6-44. The registers are accessed through the peripheral configuration port. The receive buffer registers (RBUF) and transmit buffer registers (XBUF) can also be accessed through the DMA port, as listed in Table 6-45

Registers for the McASP Audio FIFO (AFIFO) are summarized in Table 6-46. Note that the AFIFO Write FIFO (WFIFO) and Read FIFO (RFIFO) have independent control and status registers. The AFIFO control registers are accessed through the peripheral configuration port.

Table 6-44. McASP Registers Accessed Through Peripheral Configuration Port

McASP0 BYTE ADDRESS	McASP1 BYTE ADDRESS	McASP2 BYTE ADDRESS	ACRONYM	REGISTER DESCRIPTION
0x01D0 0000	0x01D0 4000	0x01D0 8000	REV	Revision identification register
0x01D0 0010	0x01D0 4010	0x01D0 8010	PFUNC	Pin function register
0x01D0 0014	0x01D0 4014	0x01D0 8014	PDIR	Pin direction register
0x01D0 0018	0x01D0 4018	0x01D0 8018	PDOUT	Pin data output register
0x01D0 001C	0x01D0 401C	0x01D0 801C	PDIN	Read returns: Pin data input register
0x01D0 001C	0x01D0 401C	0x01D0 801C	PDSET	Writes affect: Pin data set register (alternate write address: PDOUT)
0x01D0 0020	0x01D0 4020	0x01D0 8020	PDCLR	Pin data clear register (alternate write address: PDOUT)
0x01D0 0044	0x01D0 4044	0x01D0 8044	GBLCTL	Global control register
0x01D0 0048	0x01D0 4048	0x01D0 8048	AMUTE	Audio mute control register
0x01D0 004C	0x01D0 404C	0x01D0 804C	DLBCTL	Digital loopback control register
0x01D0 0050	0x01D0 4050	0x01D0 8050	DITCTL	DIT mode control register
0x01D0 0060	0x01D0 4060	0x01D0 8060	RGBLCTL	Receiver global control register: Alias of GBLCTL, only receive bits are affected - allows receiver to be reset independently from transmitter
0x01D0 0064	0x01D0 4064	0x01D0 8064	RMASK	Receive format unit bit mask register
0x01D0 0068	0x01D0 4068	0x01D0 8068	RFMT	Receive bit stream format register
0x01D0 006C	0x01D0 406C	0x01D0 806C	AFSRCTL	Receive frame sync control register
0x01D0 0070	0x01D0 4070	0x01D0 8070	ACLKRCTL	Receive clock control register
0x01D0 0074	0x01D0 4074	0x01D0 8074	AHCLKRCTL	Receive high-frequency clock control register
0x01D0 0078	0x01D0 4078	0x01D0 8078	RTDM	Receive TDM time slot 0-31 register
0x01D0 007C	0x01D0 407C	0x01D0 807C	RINTCTL	Receiver interrupt control register
0x01D0 0080	0x01D0 4080	0x01D0 8080	RSTAT	Receiver status register
0x01D0 0084	0x01D0 4084	0x01D0 8084	RSLOT	Current receive TDM time slot register
0x01D0 0088	0x01D0 4088	0x01D0 8088	RCLKCHK	Receive clock check control register
0x01D0 008C	0x01D0 408C	0x01D0 808C	REVTCTL	Receiver DMA event control register
0x01D0 00A0	0x01D0 40A0	0x01D0 80A0	XGBLCTL	Transmitter global control register. Alias of GBLCTL, only transmit bits are affected - allows transmitter to be reset independently from receiver
0x01D0 00A4	0x01D0 40A4	0x01D0 80A4	XMASK	Transmit format unit bit mask register
0x01D0 00A8	0x01D0 40A8	0x01D0 80A8	XFMT	Transmit bit stream format register
0x01D0 00AC	0x01D0 40AC	0x01D0 80AC	AFSXCTL	Transmit frame sync control register
0x01D0 00B0	0x01D0 40B0	0x01D0 80B0	ACLKXCTL	Transmit clock control register
0x01D0 00B4	0x01D0 40B4	0x01D0 80B4	AHCLKXCTL	Transmit high-frequency clock control register
0x01D0 00B8	0x01D0 40B8	0x01D0 80B8	XTDM	Transmit TDM time slot 0-31 register
0x01D0 00BC	0x01D0 40BC	0x01D0 80BC	XINTCTL	Transmitter interrupt control register
0x01D0 00C0	0x01D0 40C0	0x01D0 80C0	XSTAT	Transmitter status register
0x01D0 00C4	0x01D0 40C4	0x01D0 80C4	XSLOT	Current transmit TDM time slot register
0x01D0 00C8	0x01D0 40C8	0x01D0 80C8	XCLKCHK	Transmit clock check control register

Copyright © 2008–2014, Texas Instruments Incorporated

Table 6-44. McASP Registers Accessed Through Peripheral Configuration Port (continued)

McASP0 BYTE ADDRESS	McASP1 BYTE ADDRESS	McASP2 BYTE ADDRESS	ACRONYM	REGISTER DESCRIPTION
0x01D0 00CC	0x01D0 40CC	0x01D0 80CC	XEVTCTL	Transmitter DMA event control register
0x01D0 0100	0x01D0 4100	0x01D0 8100	DITCSRA0	Left (even TDM time slot) channel status register (DIT mode) 0
0x01D0 0104	0x01D0 4104	0x01D0 8104	DITCSRA1	Left (even TDM time slot) channel status register (DIT mode) 1
0x01D0 0108	0x01D0 4108	0x01D0 8108	DITCSRA2	Left (even TDM time slot) channel status register (DIT mode) 2
0x01D0 010C	0x01D0 410C	0x01D0 810C	DITCSRA3	Left (even TDM time slot) channel status register (DIT mode) 3
0x01D0 0110	0x01D0 4110	0x01D0 8110	DITCSRA4	Left (even TDM time slot) channel status register (DIT mode) 4
0x01D0 0114	0x01D0 4114	0x01D0 8114	DITCSRA5	Left (even TDM time slot) channel status register (DIT mode) 5
0x01D0 0118	0x01D0 4118	0x01D0 8118	DITCSRB0	Right (odd TDM time slot) channel status register (DIT mode) 0
0x01D0 011C	0x01D0 411C	0x01D0 811C	DITCSRB1	Right (odd TDM time slot) channel status register (DIT mode) 1
0x01D0 0120	0x01D0 4120	0x01D0 8120	DITCSRB2	Right (odd TDM time slot) channel status register (DIT mode) 2
0x01D0 0124	0x01D0 4124	0x01D0 8124	DITCSRB3	Right (odd TDM time slot) channel status register (DIT mode) 3
0x01D0 0128	0x01D0 4128	0x01D0 8128	DITCSRB4	Right (odd TDM time slot) channel status register (DIT mode) 4
0x01D0 012C	0x01D0 412C	0x01D0 812C	DITCSRB5	Right (odd TDM time slot) channel status register (DIT mode) 5
0x01D0 0130	0x01D0 4130	0x01D0 8130	DITUDRA0	Left (even TDM time slot) channel user data register (DIT mode) 0
0x01D0 0134	0x01D0 4134	0x01D0 8134	DITUDRA1	Left (even TDM time slot) channel user data register (DIT mode) 1
0x01D0 0138	0x01D0 4138	0x01D0 8138	DITUDRA2	Left (even TDM time slot) channel user data register (DIT mode) 2
0x01D0 013C	0x01D0 413C	0x01D0 813C	DITUDRA3	Left (even TDM time slot) channel user data register (DIT mode) 3
0x01D0 0140	0x01D0 4140	0x01D0 8140	DITUDRA4	Left (even TDM time slot) channel user data register (DIT mode) 4
0x01D0 0144	0x01D0 4144	0x01D0 8144	DITUDRA5	Left (even TDM time slot) channel user data register (DIT mode) 5
0x01D0 0148	0x01D0 4148	0x01D0 8148	DITUDRB0	Right (odd TDM time slot) channel user data register (DIT mode) 0
0x01D0 014C	0x01D0 414C	0x01D0 814C	DITUDRB1	Right (odd TDM time slot) channel user data register (DIT mode) 1
0x01D0 0150	0x01D0 4150	0x01D0 8150	DITUDRB2	Right (odd TDM time slot) channel user data register (DIT mode) 2
0x01D0 0154	0x01D0 4154	0x01D0 8154	DITUDRB3	Right (odd TDM time slot) channel user data register (DIT mode) 3
0x01D0 0158	0x01D0 4158	0x01D0 8158	DITUDRB4	Right (odd TDM time slot) channel user data register (DIT mode) 4
0x01D0 015C	0x01D0 415C	0x01D0 815C	DITUDRB5	Right (odd TDM time slot) channel user data register (DIT mode) 5
0x01D0 0180	0x01D0 4180	0x01D0 8180	SRCTL0	Serializer control register 0
0x01D0 0184	0x01D0 4184	0x01D0 8184	SRCTL1	Serializer control register 1
0x01D0 0188	0x01D0 4188	0x01D0 8188	SRCTL2	Serializer control register 2
0x01D0 018C	0x01D0 418C	0x01D0 818C	SRCTL3	Serializer control register 3
0x01D0 0190	0x01D0 4190	0x01D0 8190	SRCTL4	Serializer control register 4
0x01D0 0194	0x01D0 4194	0x01D0 8194	SRCTL5	Serializer control register 5
0x01D0 0198	0x01D0 4198	0x01D0 8198	SRCTL6	Serializer control register 6
0x01D0 019C	0x01D0 419C	0x01D0 819C	SRCTL7	Serializer control register 7
0x01D0 01A0	0x01D0 41A0	0x01D0 81A0	SRCTL8	Serializer control register 8
0x01D0 01A4	0x01D0 41A4	0x01D0 81A4	SRCTL9	Serializer control register 9
0x01D0 01A8	0x01D0 41A8	0x01D0 81A8	SRCTL10	Serializer control register 10
0x01D0 01AC	0x01D0 41AC	0x01D0 81AC	SRCTL11	Serializer control register 11
0x01D0 01B0	0x01D0 41B0	0x01D0 81B0	SRCTL12	Serializer control register 12
0x01D0 01B4	0x01D0 41B4	0x01D0 81B4	SRCTL13	Serializer control register 13
0x01D0 01B8	0x01D0 41B8	0x01D0 81B8	SRCTL14	Serializer control register 14
0x01D0 01BC	0x01D0 41BC	0x01D0 81BC	SRCTL15	Serializer control register 15
0x01D0 0200	0x01D0 4200	0x01D0 8200	XBUF0(1)	Transmit buffer register for serializer 0
0x01D0 0204	0x01D0 4204	0x01D0 8204	XBUF1(1)	Transmit buffer register for serializer 1
0x01D0 0208	0x01D0 4208	0x01D0 8208	XBUF2(1)	Transmit buffer register for serializer 2
0x01D0 020C	0x01D0 420C	0x01D0 820C	XBUF3(1)	Transmit buffer register for serializer 3

(1) Writes to XRBUF originate from peripheral configuration port only when XBUSEL = 1 in XFMT.

Copyright © 2008–2014, Texas Instruments Incorporated

Table 6-44. McASP Registers Accessed Through Peripheral Configuration Port (continued)

McASP0 BYTE ADDRESS	McASP1 BYTE ADDRESS	McASP2 BYTE ADDRESS	ACRONYM	REGISTER DESCRIPTION
0x01D0 0210	0x01D0 4210	0x01D0 8210	XBUF4(1)	Transmit buffer register for serializer 4
0x01D0 0214	0x01D0 4214	0x01D0 8214	XBUF5(1)	Transmit buffer register for serializer 5
0x01D0 0218	0x01D0 4218	0x01D0 8218	XBUF6(1)	Transmit buffer register for serializer 6
0x01D0 021C	0x01D0 421C	0x01D0 821C	XBUF7(1)	Transmit buffer register for serializer 7
0x01D0 0220	0x01D0 4220	0x01D0 8220	XBUF8(1)	Transmit buffer register for serializer 8
0x01D0 0224	0x01D0 4224	0x01D0 8224	XBUF9(1)	Transmit buffer register for serializer 9
0x01D0 0228	0x01D0 4228	0x01D0 8228	XBUF10(1)	Transmit buffer register for serializer 10
0x01D0 022C	0x01D0 422C	0x01D0 822C	XBUF11(1)	Transmit buffer register for serializer 11
0x01D0 0230	0x01D0 4230	0x01D0 8230	XBUF12(1)	Transmit buffer register for serializer 12
0x01D0 0234	0x01D0 4234	0x01D0 8234	XBUF13(1)	Transmit buffer register for serializer 13
0x01D0 0238	0x01D0 4238	0x01D0 8238	XBUF14(1)	Transmit buffer register for serializer 14
0x01D0 023C	0x01D0 423C	0x01D0 823C	XBUF15(1)	Transmit buffer register for serializer 15
0x01D0 0280	0x01D0 4280	0x01D0 8280	RBUF0(2)	Receive buffer register for serializer 0
0x01D0 0284	0x01D0 4284	0x01D0 8284	RBUF1(2)	Receive buffer register for serializer 1
0x01D0 0288	0x01D0 4288	0x01D0 8288	RBUF2(2)	Receive buffer register for serializer 2
0x01D0 028C	0x01D0 428C	0x01D0 828C	RBUF3(2)	Receive buffer register for serializer 3
0x01D0 0290	0x01D0 4290	0x01D0 8290	RBUF4(2)	Receive buffer register for serializer 4
0x01D0 0294	0x01D0 4294	0x01D0 8294	RBUF5(2)	Receive buffer register for serializer 5
0x01D0 0298	0x01D0 4298	0x01D0 8298	RBUF6(2)	Receive buffer register for serializer 6
0x01D0 029C	0x01D0 429C	0x01D0 829C	RBUF7(2)	Receive buffer register for serializer 7
0x01D0 02A0	0x01D0 42A0	0x01D0 82A0	RBUF8(2)	Receive buffer register for serializer 8
0x01D0 02A4	0x01D0 42A4	0x01D0 82A4	RBUF9(2)	Receive buffer register for serializer 9
0x01D0 02A8	0x01D0 42A8	0x01D0 82A8	RBUF10(2)	Receive buffer register for serializer 10
0x01D0 02AC	0x01D0 42AC	0x01D0 82AC	RBUF11(2)	Receive buffer register for serializer 11
0x01D0 02B0	0x01D0 42B0	0x01D0 82B0	RBUF12(2)	Receive buffer register for serializer 12
0x01D0 02B4	0x01D0 42B4	0x01D0 82B4	RBUF13(2)	Receive buffer register for serializer 13
0x01D0 02B8	0x01D0 42B8	0x01D0 82BB	RBUF14(2)	Receive buffer register for serializer 14
0x01D0 02BC	0x01D0 42BC	0x01D0 82BC	RBUF15(2)	Receive buffer register for serializer 15

(2) Reads from XRBUF originate on peripheral configuration port only when RBUSEL = 1 in RFMT.

Copyright © 2008–2014, Texas Instruments Incorporated

Table 6-45. McASP Registers Accessed Through DMA Port

Hex Address	Register Name	McASP0 BYTE ADDRESS	McASP1 BYTE ADDRESS	McASP2 BYTE ADDRESS	REGISTER DESCRIPTION
Read Accesses	RBUF	01D0 2000	01D0 6000	01D0 A000	Receive buffer DMA port address. Cycles through receive serializers, skipping over transmit serializers and inactive serializers. Starts at the lowest serializer at the beginning of each time slot. Reads from DMA port only if RBUSEL = 0 in RFMT.
Write Accesses	XBUF	01D0 2000	01D0 6000	01D0 A000	Transmit buffer DMA port address. Cycles through transmit serializers, skipping over receive and inactive serializers. Starts at the lowest serializer at the beginning of each time slot. Writes to DMA port only if XBUSEL = 0 in XFMT.

Table 6-46. McASP AFIFO Registers Accessed Through Peripheral Configuration Port

McASP0 BYTE ADDRESS	McASP1 BYTE ADDRESS	McASP2 BYTE ADDRESS	ACRONYM	REGISTER DESCRIPTION
0x01D0 1000	0x01D0 5000	0x01D0 9000	AFIFOREV	AFIFO revision identification register
0x01D0 1010	0x01D0 5010	0x01D0 9010	WFIFOCTL	Write FIFO control register
0x01D0 1014	0x01D0 5014	0x01D0 9014	WFIFOSTS	Write FIFO status register
0x01D0 1018	0x01D0 5018	0x01D0 9018	RFIFOCTL	Read FIFO control register
0x01D0 101C	0x01D0 501C	0x01D0 901C	RFIFOSTS	Read FIFO status register

Copyright © 2008–2014, Texas Instruments Incorporated

6.16.2 McASP Electrical Data/Timing

6.16.2.1 Multichannel Audio Serial Port 0 (McASP0) Timing

Table 6-47 and Table 6-48 assume testing over recommended operating conditions (see Figure 6-34 and Figure 6-35).

Table 6-47. McASP0 Timing Requirements(1) (2)

No.	PARAMATER		MIN	MAX	UNIT
1	$t_{c(AHCLKRX)}$	Cycle time, AHCLKR0 external, AHCLKR0 input	25		ns
		Cycle time, AHCLKX0 external, AHCLKX0 input	25		
2	$t_{w(AHCLKRX)}$	Pulse duration, AHCLKR0 external, AHCLKR0 input	12.5		ns
		Pulse duration, AHCLKX0 external, AHCLKX0 input	12.5		
3	$t_{c(ACLKRX)}$	Cycle time, ACLKR0 external, ACLKR0 input	greater of 2P or 25		ns
		Cycle time, ACLKX0 external, ACLKX0 input	greater of 2P or 25		
4	$t_{w(ACLKRX)}$	Pulse duration, ACLKR0 external, ACLKR0 input	12.5		ns
		Pulse duration, ACLKX0 external, ACLKX0 input	12.5		
5	$t_{su(AFSRX-ACLKRX)}$	Setup time, AFSR0 input to ACLKR0 internal(3)	9.4		ns
		Setup time, AFSX0 input to ACLKX0 internal	9.4		
		Setup time, AFSR0 input to ACLKR0 external input(3)	2.9		
		Setup time, AFSX0 input to ACLKX0 external input	2.9		
		Setup time, AFSR0 input to ACLKR0 external output(3)	2.9		
		Setup time, AFSX0 input to ACLKX0 external output	2.9		
6	$t_{h(ACLKRX-AFSRX)}$	Hold time, AFSR0 input after ACLKR0 internal(3)	-1.2		ns
		Hold time, AFSX0 input after ACLKX0 internal	-1.2		
		Hold time, AFSR0 input after ACLKR0 external input(3)	0.9		
		Hold time, AFSX0 input after ACLKX0 external input	0.9		
		Hold time, AFSR0 input after ACLKR0 external output(3)	0.9		
		Hold time, AFSX0 input after ACLKX0 external output	0.9		
7	$t_{su(AXR-ACLKRX)}$	Setup time, AXR0[n] input to ACLKR0 internal(3)	9.4		ns
		Setup time, AXR0[n] input to ACLKX0 internal(4)	9.4		
		Setup time, AXR0[n] input to ACLKR0 external input(3)	2.9		
		Setup time, AXR0[n] input to ACLKX0 external input(4)	2.9		
		Setup time, AXR0[n] input to ACLKR0 external output(3)	2.9		
		Setup time, AXR0[n] input to ACLKX0 external output(4)	2.9		
8	$t_{h(ACLKRX-AXR)}$	Hold time, AXR0[n] input after ACLKR0 internal(3)	-1.3		ns
		Hold time, AXR0[n] input after ACLKX0 internal(4)	-1.3		
		Hold time, AXR0[n] input after ACLKR0 external input(3)	0.5		
		Hold time, AXR0[n] input after ACLKX0 external input(4)	0.5		
		Hold time, AXR0[n] input after ACLKR0 external output(3)	0.5		
		Hold time, AXR0[n] input after ACLKX0 external output(4)	0.5		

(1) ACLKX0 internal – McASP0 ACLKXCTL.CLKXM = 1, PDIR.ACLKX = 1
ACLKX0 external input – McASP0 ACLKXCTL.CLKXM = 0, PDIR.ACLKX = 0
ACLKX0 external output – McASP0 ACLKXCTL.CLKXM = 0, PDIR.ACLKX = 1
ACLKR0 internal – McASP0 ACLKRCTL.CLKRM = 1, PDIR.ACLKR =1
ACLKR0 external input – McASP0 ACLKRCTL.CLKRM = 0, PDIR.ACLKR = 0
ACLKR0 external output – McASP0 ACLKRCTL.CLKRM = 0, PDIR.ACLKR = 1
(2) P = SYSCLK2 period
(3) McASP0 ACLKXCTL.ASYNC=1: Receiver is clocked by its own ACLKR0
(4) McASP0 ACLKXCTL.ASYNC=0: Receiver is clocked by transmitter's ACLKX0

Copyright © 2008–2014, Texas Instruments Incorporated

Table 6-48. McASP0 Switching Characteristics(1)

No.	PARAMETER		MIN	MAX	UNIT
9	$t_{c(AHCLKRX)}$	Cycle time, AHCLKR0 internal, AHCLKR0 output	25		ns
		Cycle time, AHCLKR0 external, AHCLKR0 output	25		
		Cycle time, AHCLKX0 internal, AHCLKX0 output	25		
		Cycle time, AHCLKX0 external, AHCLKX0 output	25		
10	$t_{w(AHCLKRX)}$	Pulse duration, AHCLKR0 internal, AHCLKR0 output	(AHR/2) – 2.5(2)		ns
		Pulse duration, AHCLKR0 external, AHCLKR0 output	(AHR/2) – 2.5(2)		
		Pulse duration, AHCLKX0 internal, AHCLKX0 output	(AHX/2) – 2.5(3)		
		Pulse duration, AHCLKX0 external, AHCLKX0 output	(AHX/2) – 2.5(3)		
11	$t_{c(ACLKRX)}$	Cycle time, ACLKR0 internal, ACLKR0 output	greater of 2P or 25(4)		ns
		Cycle time, ACLKR0 external, ACLKR0 output	greater of 2P or 25(4)		
		Cycle time, ACLKX0 internal, ACLKX0 output	greater of 2P or 25(4)		
		Cycle time, ACLKX0 external, ACLKX0 output	greater of 2P or 25(4)		
12	$t_{w(ACLKRX)}$	Pulse duration, ACLKR0 internal, ACLKR0 output	(AR/2) – 2.5(5)		ns
		Pulse duration, ACLKR0 external, ACLKR0 output	(AR/2) – 2.5(5)		
		Pulse duration, ACLKX0 internal, ACLKX0 output	(AX/2) – 2.5(6)		
		Pulse duration, ACLKX0 external, ACLKX0 output	(AX/2) – 2.5(6)		
13	$t_{d(ACLKRX-AFSRX)}$	Delay time, ACLKR0 internal, AFSR output(7)	0	5.8	ns
		Delay time, ACLKX0 internal, AFSX output	0	5.8	
		Delay time, ACLKR0 external input, AFSR output(7)	2.5	11.6	
		Delay time, ACLKX0 external input, AFSX output	2.5	11.6	
		Delay time, ACLKR0 external output, AFSR output(7)	2.5	11.6	
		Delay time, ACLKX0 external output, AFSX output	2.5	11.6	
14	$t_{d(ACLKX-AXRV)}$	Delay time, ACLKX0 internal, AXR0[n] output	0	5.8	ns
		Delay time, ACLKX0 external input, AXR0[n] output	2.5	11.6	
		Delay time, ACLKX0 external output, AXR0[n] output	2.5	11.6	
15	$t_{dis(ACLKX-AXRHZ)}$	Disable time, ACLKX0 internal, AXR0[n] output	0	5.8	ns
		Disable time, ACLKX0 external input, AXR0[n] output	3	11.6	
		Disable time, ACLKX0 external output, AXR0[n] output	3	11.6	

(1) McASP0 ACLKX0 internal – ACLKXCTL.CLKXM = 1, PDIR.ACLKX = 1
ACLKX0 external input – McASP0 ACLKXCTL.CLKXM = 0, PDIR.ACLKX = 0
ACLKX0 external output – McASP0ACLKXCTL.CLKXM = 0, PDIR.ACLKX = 1
ACLKR0 internal – McASP0 ACLKR0CTL.CLKRM = 1, PDIR.ACLKR =1
ACLKR0 external input – McASP0 ACLKRCTL.CLKRM = 0, PDIR.ACLKR = 0
ACLKR0 external output – McASP0 ACLKRCTL.CLKRM = 0, PDIR.ACLKR = 1
(2) AHR - Cycle time, AHCLKR0.
(3) AHX - Cycle time, AHCLKX0.
(4) P = SYSCLK2 period
(5) AR - ACLKR0 period.
(6) AX - ACLKX0 period.
(7) McASP0 ACLKXCTL.ASYNC=1: Receiver is clocked by its own ACLKR0

Copyright © 2008–2014, Texas Instruments Incorporated

6.16.2.2 Multichannel Audio Serial Port 1 (McASP1) Timing

Table 6-49 and Table 6-50 assume testing over recommended operating conditions (see Figure 6-34 and Figure 6-35).

Table 6-49. McASP1 Timing Requirements(1) (2)

No.	PARAMATER		MIN	MAX	UNIT
1	$t_{c(AHCLKRX)}$	Cycle time, AHCLKR1 external, AHCLKR1 input	25		ns
		Cycle time, AHCLKX1 external, AHCLKX1 input	25		
2	$t_{w(AHCLKRX)}$	Pulse duration, AHCLKR1 external, AHCLKR1 input	12.5		ns
		Pulse duration, AHCLKX1 external, AHCLKX1 input	12.5		
3	$t_{c(ACLKRX)}$	Cycle time, ACLKR1 external, ACLKR1 input	greater of 2P or 25		ns
		Cycle time, ACLKX1 external, ACLKX1 input	greater of 2P or 25		
4	$t_{w(ACLKRX)}$	Pulse duration, ACLKR1 external, ACLKR1 input	12.5		ns
		Pulse duration, ACLKX1 external, ACLKX1 input	12.5		
5	$t_{su(AFSRX-ACLKRX)}$	Setup time, AFSR1 input to ACLKR1 internal(3)	10.4		ns
		Setup time, AFSX1 input to ACLKX1 internal	10.4		
		Setup time, AFSR1 input to ACLKR1 external input(3)	2.6		
		Setup time, AFSX1 input to ACLKX1 external input	2.6		
		Setup time, AFSR1 input to ACLKR1 external output(3)	2.6		
		Setup time, AFSX1 input to ACLKX1 external output	2.6		
6	$t_{h(ACLKRX-AFSRX)}$	Hold time, AFSR1 input after ACLKR1 internal(3)	-1.9		ns
		Hold time, AFSX1 input after ACLKX1 internal	-1.9		
		Hold time, AFSR1 input after ACLKR1 external input(3)	0.7		
		Hold time, AFSX1 input after ACLKX1 external input	0.7		
		Hold time, AFSR1 input after ACLKR1 external output(3)	0.7		
		Hold time, AFSX1 input after ACLKX1 external output	0.7		
7	$t_{su(AXR-ACLKRX)}$	Setup time, AXR1[n] input to ACLKR1 internal(3)	10.4		ns
		Setup time, AXR1[n] input to ACLKX1 internal(4)	10.4		
		Setup time, AXR1[n] input to ACLKR1 external input(3)	2.6		
		Setup time, AXR1[n] input to ACLKX1 external input(4)	2.6		
		Setup time, AXR1[n] input to ACLKR1 external output(3)	2.6		
		Setup time, AXR1[n] input to ACLKX1 external output(4)	2.6		
8	$t_{h(ACLKRX-AXR)}$	Hold time, AXR1[n] input after ACLKR1 internal(3)	-1.8		ns
		Hold time, AXR1[n] input after ACLKX1 internal(4)	-1.8		
		Hold time, AXR1[n] input after ACLKR1 external input(3)	0.5		
		Hold time, AXR1[n] input after ACLKX1 external input(4)	0.5		
		Hold time, AXR1[n] input after ACLKR1 external output(3)	0.5		
		Hold time, AXR1[n] input after ACLKX1 external output(4)	0.5		

(1) ACLKX1 internal – McASP1 ACLKXCTL.CLKXM = 1, PDIR.ACLKX = 1
ACLKX1 external input – McASP1 ACLKXCTL.CLKXM = 0, PDIR.ACLKX = 0
ACLKX1 external output – McASP1 ACLKXCTL.CLKXM = 0, PDIR.ACLKX = 1
ACLKR1 internal – McASP1 ACLKRCTL.CLKRM = 1, PDIR.ACLKR =1
ACLKR1 external input – McASP1 ACLKRCTL.CLKRM = 0, PDIR.ACLKR = 0
ACLKR1 external output – McASP1 ACLKRCTL.CLKRM = 0, PDIR.ACLKR = 1
(2) P = SYSCLK2 period
(3) McASP1 ACLKXCTL.ASYNC=1: Receiver is clocked by its own ACLKR1
(4) McASP1 ACLKXCTL.ASYNC=0: Receiver is clocked by transmitter's ACLKX1

Copyright © 2008–2014, Texas Instruments Incorporated

Table 6-50. McASP1 Switching Characteristics[1]

NO.	PARAMETER		MIN	MAX	UNIT
9	$t_{c(AHCLKRX)}$	Cycle time, AHCLKR1 internal, AHCLKR1 output	25		ns
		Cycle time, AHCLKR1 external, AHCLKR1 output	25		
		Cycle time, AHCLKX1 internal, AHCLKX1 output	25		
		Cycle time, AHCLKX1 external, AHCLKX1 output	25		
10	$t_{w(AHCLKRX)}$	Pulse duration, AHCLKR1 internal, AHCLKR1 output	(AHR/2) – 2.5[2]		ns
		Pulse duration, AHCLKR1 external, AHCLKR1 output	(AHR/2) – 2.5[2]		
		Pulse duration, AHCLKX1 internal, AHCLKX1 output	(AHX/2) – 2.5[3]		
		Pulse duration, AHCLKX1 external, AHCLKX1 output	(AHX/2) – 2.5[3]		
11	$t_{c(ACLKRX)}$	Cycle time, ACLKR1 internal, ACLKR1 output	greater of 2P or 25[4]		ns
		Cycle time, ACLKR1 external, ACLKR1 output	greater of 2P or 25[4]		
		Cycle time, ACLKX1 internal, ACLKX1 output	greater of 2P or 25[4]		
		Cycle time, ACLKX1 external, ACLKX1 output	greater of 2P or 25[4]		
12	$t_{w(ACLKRX)}$	Pulse duration, ACLKR1 internal, ACLKR1 output	(AR/2) – 2.5[5]		ns
		Pulse duration, ACLKR1 external, ACLKR1 output	(AR/2) – 2.5[5]		
		Pulse duration, ACLKX1 internal, ACLKX1 output	(AX/2) – 2.5[6]		
		Pulse duration, ACLKX1 external, ACLKX1 output	(AX/2) – 2.5[6]		
13	$t_{d(ACLKRX-AFSRX)}$	Delay time, ACLKR1 internal, AFSR output[7]	0.5	6.7	ns
		Delay time, ACLKX1 internal, AFSX output	0.5	6.7	
		Delay time, ACLKR1 external input, AFSR output[7]	3.4	13.8	
		Delay time, ACLKX1 external input, AFSX output	3.4	13.8	
		Delay time, ACLKR1 external output, AFSR output[7]	3.4	13.8	
		Delay time, ACLKX1 external output, AFSX output	3.4	13.8	
14	$t_{d(ACLKX-AXRV)}$	Delay time, ACLKX1 internal, AXR1[n] output	0.5	6.7	ns
		Delay time, ACLKX1 external input, AXR1[n] output	3.4	13.8	
		Delay time, ACLKX1 external output, AXR1[n] output	3.4	13.8	
15	$t_{dis(ACLKX-AXRHZ)}$	Disable time, ACLKX1 internal, AXR1[n] output	0.5	6.7	ns
		Disable time, ACLKX1 external input, AXR1[n] output	3.9	13.8	
		Disable time, ACLKX1 external output, AXR1[n] output	3.9	13.8	

(1) McASP1 ACLKX1 internal – ACLKXCTL.CLKXM = 1, PDIR.ACLKX = 1
McASP1 ACLKX1 external input – ACLKXCTL.CLKXM = 0, PDIR.ACLKX = 0
McASP1 ACLKX1 external output – ACLKXCTL.CLKXM = 0, PDIR.ACLKX = 1
McASP1 ACLKR1 internal – ACLKR1CTL.CLKRM = 1, PDIR.ACLKR =1
McASP1 ACLKR1 external input – ACLKRCTL.CLKRM = 0, PDIR.ACLKR = 0
McASP1 ACLKR1 external output – ACLKRCTL.CLKRM = 0, PDIR.ACLKR = 1
(2) AHR - Cycle time, AHCLKR1.
(3) AHX - Cycle time, AHCLKX1.
(4) P = SYSCLK2 period
(5) AR - ACLKR1 period.
(6) AX - ACLKX1 period.
(7) McASP1 ACLKXCTL.ASYNC=1: Receiver is clocked by its own ACLKR1

Copyright © 2008–2014, Texas Instruments Incorporated

6.16.2.3 Multichannel Audio Serial Port 2 (McASP2) Timing

Table 6-51 and Table 6-52 assume testing over recommended operating conditions (see Figure 6-34 and Figure 6-35).

Table 6-51. McASP2 Timing Requirements(1) (2)

NO.			MIN	MAX	UNIT
1	$t_{c(AHCLKRX)}$	Cycle time, AHCLKR2 external, AHCLKR2 input	15		ns
		Cycle time, AHCLKX2 external, AHCLKX2 input	15		
2	$t_{w(AHCLKRX)}$	Pulse duration, AHCLKR2 external, AHCLKR2 input	7.5		ns
		Pulse duration, AHCLKX2 external, AHCLKX2 input	7.5		
3	$t_{c(ACLKRX)}$	Cycle time, ACLKR2 external, ACLKR2 input	greater of 2P or 15		ns
		Cycle time, ACLKX2 external, ACLKX2 input	greater of 2P or 15		
4	$t_{w(ACLKRX)}$	Pulse duration, ACLKR2 external, ACLKR2 input	7.5		ns
		Pulse duration, ACLKX2 external, ACLKX2 input	7.5		
5	$t_{su(AFSRX-ACLKRX)}$	Setup time, AFSR2 input to ACLKR2 internal(3)	10		ns
		Setup time, AFSX2 input to ACLKX2 internal	10		
		Setup time, AFSR2 input to ACLKR2 external input(3)	1.6		
		Setup time, AFSX2 input to ACLKX2 external input	1.6		
		Setup time, AFSR2 input to ACLKR2 external output(3)	1.6		
		Setup time, AFSX2 input to ACLKX2 external output	1.6		
6	$t_{h(ACLKRX-AFSRX)}$	Hold time, AFSR2 input after ACLKR2 internal(3)	-1.7		ns
		Hold time, AFSX2 input after ACLKX2 internal	-1.7		
		Hold time, AFSR2 input after ACLKR2 external input(3)	1.3		
		Hold time, AFSX2 input after ACLKX2 external input	1.3		
		Hold time, AFSR2 input after ACLKR2 external output(3)	1.3		
		Hold time, AFSX2 input after ACLKX2 external output	1.3		
7	$t_{su(AXR-ACLKRX)}$	Setup time, AXR2[n] input to ACLKR2 internal(3)	10		ns
		Setup time, AXR2[n] input to ACLKX2 internal(4)	10		
		Setup time, AXR2[n] input to ACLKR2 external input(3)	1.6		
		Setup time, AXR2[n] input to ACLKX2 external input(4)	1.6		
		Setup time, AXR2[n] input to ACLKR2 external output(3)	1.6		
		Setup time, AXR2[n] input to ACLKX2 external output(4)	1.6		
8	$t_{h(ACLKRX-AXR)}$	Hold time, AXR2[n] input after ACLKR2 internal(3)	-1.7		ns
		Hold time, AXR2[n] input after ACLKX2 internal(4)	-1.7		
		Hold time, AXR2[n] input after ACLKR2 external input(3)	1.3		
		Hold time, AXR2[n] input after ACLKX2 external input(4)	1.3		
		Hold time, AXR2[n] input after ACLKR2 external output(3)	1.3		
		Hold time, AXR2[n] input after ACLKX2 external output(4)	1.3		

(1) ACLKX2 internal – McASP2 ACLKXCTL.CLKXM = 1, PDIR.ACLKX = 1
ACLKX2 external input – McASP2 ACLKXCTL.CLKXM = 0, PDIR.ACLKX = 0
ACLKX2 external output – McASP2 ACLKXCTL.CLKXM = 0, PDIR.ACLKX = 1
ACLKR2 internal – McASP2 ACLKRCTL.CLKRM = 1, PDIR.ACLKR =1
ACLKR2 external input – McASP2 ACLKRCTL.CLKRM = 0, PDIR.ACLKR = 0
ACLKR2 external output – McASP2 ACLKRCTL.CLKRM = 0, PDIR.ACLKR = 1
(2) P = SYSCLK2 period
(3) McASP2 ACLKXCTL.ASYNC=1: Receiver is clocked by its own ACLKR2
(4) McASP2 ACLKXCTL.ASYNC=0: Receiver is clocked by transmitter's ACLKX2

Copyright © 2008–2014, Texas Instruments Incorporated

Table 6-52. McASP2 Switching Characteristics[1]

NO.	PARAMETER		MIN	MAX	UNIT
9	$t_{c(AHCLKRX)}$	Cycle time, AHCLKR2 internal, AHCLKR2 output	15		ns
		Cycle time, AHCLKR2 external, AHCLKR2 output	15		
		Cycle time, AHCLKX2 internal, AHCLKX2 output	15		
		Cycle time, AHCLKX2 external, AHCLKX2 output	15		
10	$t_{w(AHCLKRX)}$	Pulse duration, AHCLKR2 internal, AHCLKR2 output	(AHR/2) – 2.5[2]		ns
		Pulse duration, AHCLKR2 external, AHCLKR2 output	(AHR/2) – 2.5[2]		
		Pulse duration, AHCLKX2 internal, AHCLKX2 output	(AHX/2) – 2.5[3]		
		Pulse duration, AHCLKX2 external, AHCLKX2 output	(AHX/2) – 2.5[3]		
11	$t_{c(ACLKRX)}$	Cycle time, ACLKR2 internal, ACLKR2 output	greater of 2P or 15[4]		ns
		Cycle time, ACLKR2 external, ACLKR2 output	greater of 2P or 15[4]		
		Cycle time, ACLKX2 internal, ACLKX2 output	greater of 2P or 15[4]		
		Cycle time, ACLKX2 external, ACLKX2 output	greater of 2P or 15[4]		
12	$t_{w(ACLKRX)}$	Pulse duration, ACLKR2 internal, ACLKR2 output	(AR/2) – 2.5[5]		ns
		Pulse duration, ACLKR2 external, ACLKR2 output	(AR/2) – 2.5[5]		
		Pulse duration, ACLKX2 internal, ACLKX2 output	(AX/2) – 2.5[6]		
		Pulse duration, ACLKX2 external, ACLKX2 output	(AX/2) – 2.5[6]		
13	$t_{d(ACLKRX-AFSRX)}$	Delay time, ACLKR2 internal, AFSR output[7]	-1.4	2.8	ns
		Delay time, ACLKX2 internal, AFSX output	-1.4	2.8	
		Delay time, ACLKR2 external input, AFSR output[7]	2.1	10	
		Delay time, ACLKX2 external input, AFSX output	2.1	10	
		Delay time, ACLKR2 external output, AFSR output[7]	2.1	10	
		Delay time, ACLKX2 external output, AFSX output	2.1	10	
14	$t_{d(ACLKX-AXRV)}$	Delay time, ACLKX2 internal, AXR2[n] output	-1.4	2.8	ns
		Delay time, ACLKX2 external input, AXR2[n] output	2.1	10	
		Delay time, ACLKX2 external output, AXR2[n] output	2.1	10	
15	$t_{dis(ACLKX-AXRHZ)}$	Disable time, ACLKX2 internal, AXR2[n] output	-1.4	2.8	ns
		Disable time, ACLKX2 external input, AXR2[n] output	2.9	10	
		Disable time, ACLKX2 external output, AXR2[n] output	2.9	10	

(1) McASP2 ACLKX2 internal – ACLKXCTL.CLKXM = 1, PDIR.ACLKX = 1
McASP2 ACLKX2 external input – ACLKXCTL.CLKXM = 0, PDIR.ACLKX = 0
McASP2 ACLKX2 external output – ACLKXCTL.CLKXM = 0, PDIR.ACLKX = 1
McASP2 ACLKR2 internal – ACLKR2CTL.CLKRM = 1, PDIR.ACLKR =1
McASP2 ACLKR2 external input – ACLKRCTL.CLKRM = 0, PDIR.ACLKR = 0
McASP2 ACLKR2 external output – ACLKRCTL.CLKRM = 0, PDIR.ACLKR = 1
(2) AHR - Cycle time, AHCLKR2.
(3) AHX - Cycle time, AHCLKX2.
(4) P = SYSCLK2 period
(5) AR - ACLKR2 period.
(6) AX - ACLKX2 period.
(7) McASP2 ACLKXCTL.ASYNC=1: Receiver is clocked by its own ACLKR2

Copyright © 2008–2014, Texas Instruments Incorporated

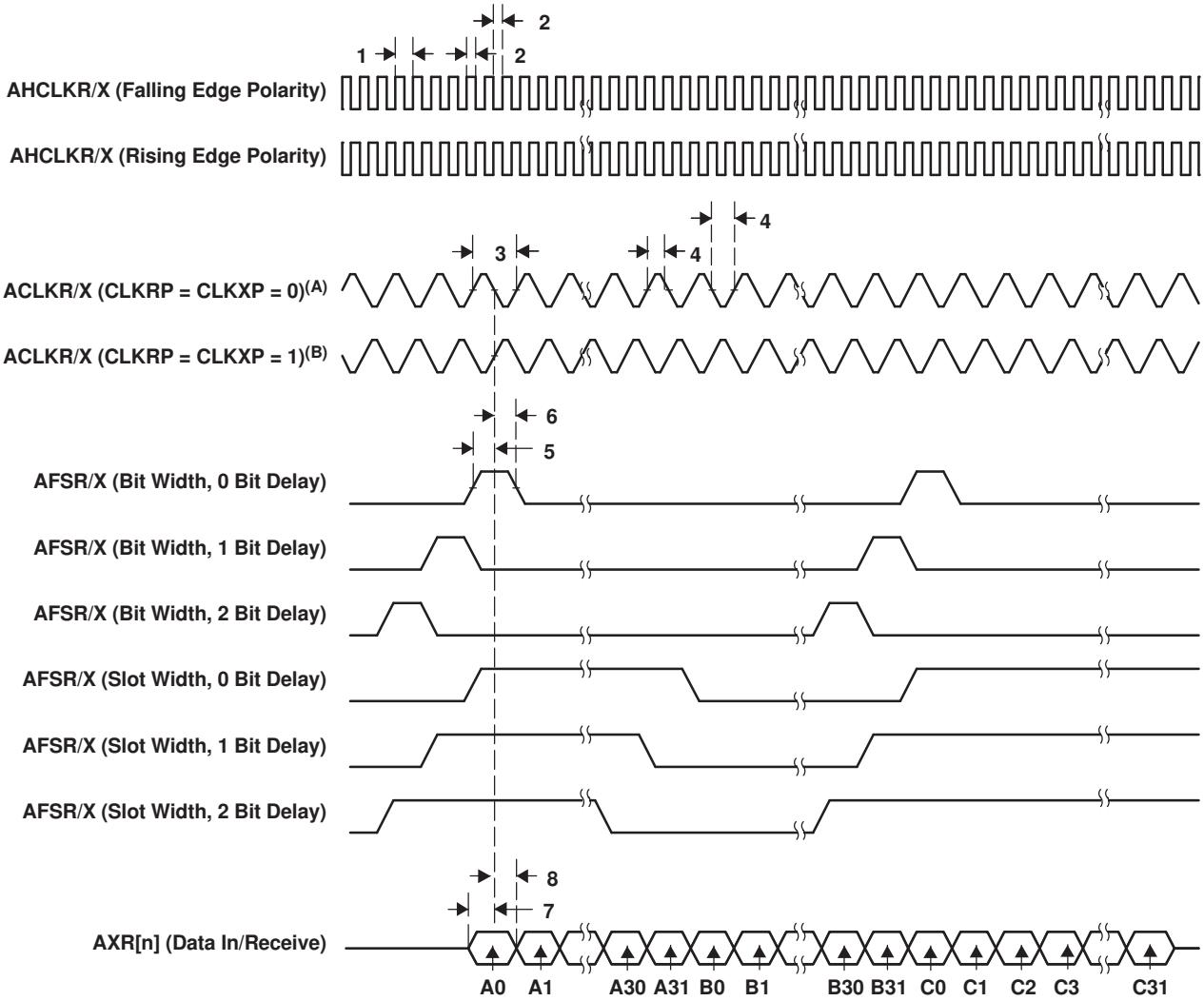

A. For CLKRP = CLKXP = 0, the McASP transmitter is configured for rising edge (to shift data out) and the McASP receiver is configured for falling edge (to shift data in).

B. For CLKRP = CLKXP = 1, the McASP transmitter is configured for falling edge (to shift data out) and the McASP receiver is configured for rising edge (to shift data in).

Figure 6-34. McASP Input Timings

Copyright © 2008–2014, Texas Instruments Incorporated

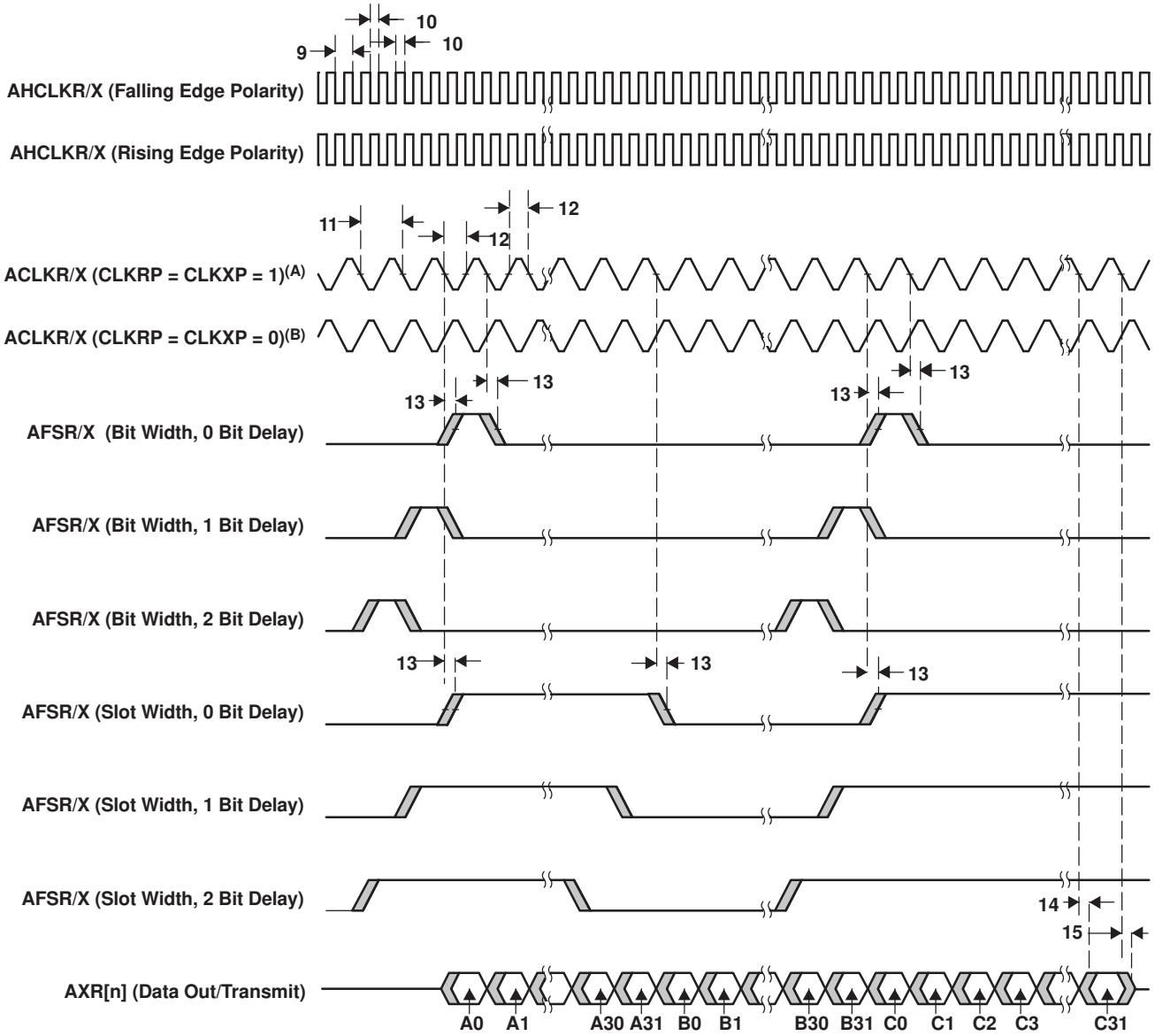

A. For CLKRP = CLKXP = 1, the McASP transmitter is configured for falling edge (to shift data out) and the McASP receiver is configured for rising edge (to shift data in).

B. For CLKRP = CLKXP = 0, the McASP transmitter is configured for rising edge (to shift data out) and the McASP receiver is configured for falling edge (to shift data in).

Figure 6-35. McASP Output Timings

6.17 Serial Peripheral Interface Ports (SPI0, SPI1)

Figure 6-36 is a block diagram of the SPI module, which is a simple shift register and buffer plus control logic. Data is written to the shift register before transmission occurs and is read from the buffer at the end of transmission. The SPI can operate either as a master, in which case, it initiates a transfer and drives the SPIx_CLK pin, or as a slave. Four clock phase and polarity options are supported as well as many data formatting options.

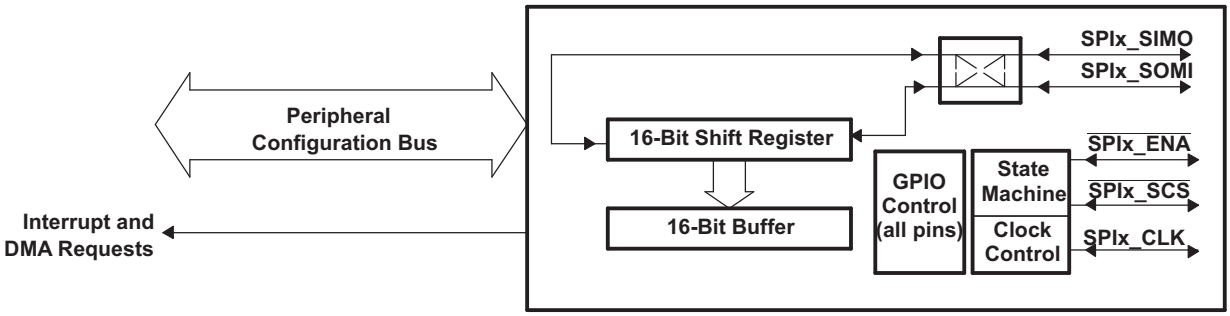

Figure 6-36. Block Diagram of SPI Module

The SPI supports 3-, 4-, and 5-pin operation with three basic pins (SPIx_CLK, SPIx_SIMO, and SPIx_SOMI) and two optional pins ($\overline{\text{SPIx_SCS}}$, $\overline{\text{SPIx_ENA}}$).

The optional $\overline{\text{SPIx_SCS}}$ (Slave Chip Select) pin is most useful to enable in slave mode when there are other slave devices on the same SPI port. The C6745/6747 will only shift data and drive the SPIx_SOMI pin when $\overline{\text{SPIx_SCS}}$ is held low.

In slave mode, $\overline{\text{SPIx_ENA}}$ is an optional output. The $\overline{\text{SPIx_ENA}}$ output provides the status of the internal transmit buffer (SPIDAT0/1 registers). In four-pin mode with the enable option, $\overline{\text{SPIx_ENA}}$ is asserted only when the transmit buffer is full, indicating that the slave is ready to begin another transfer. In five-pin mode, the $\overline{\text{SPIx_ENA}}$ is additionally qualified by $\overline{\text{SPIx_SCS}}$ being asserted. This allows a single handshake line to be shared by multiple slaves on the same SPI bus.

In master mode, the $\overline{\text{SPIx_ENA}}$ pin is an optional input and the master can be configured to delay the start of the next transfer until the slave asserts $\overline{\text{SPIx_ENA}}$. The addition of this handshake signal simplifies SPI communications and, on average, increases SPI bus throughput since the master does not need to delay each transfer long enough to allow for the worst-case latency of the slave device. Instead, each transfer can begin as soon as both the master and slave have actually serviced the previous SPI transfer.

Although the SPI module supports two interrupt outputs, SPIx_INT1 is the only interrupt connected on this device.

Copyright © 2008–2014, Texas Instruments Incorporated

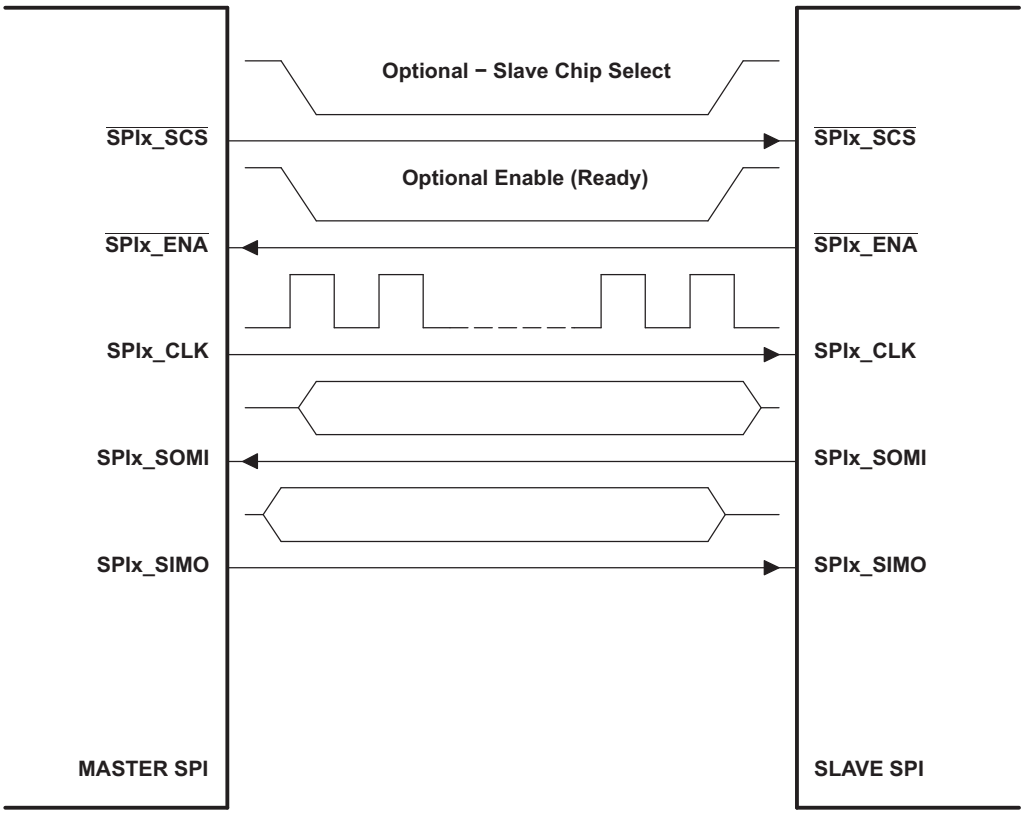

Figure 6-37. Illustration of SPI Master-to-SPI Slave Connection

6.17.1 SPI Peripheral Registers Description(s)

Table 6-53 is a list of the SPI registers.

Table 6-53. SPIx Configuration Registers

SPI0 BYTE ADDRESS	SPI1 BYTE ADDRESS	ACRONYM	REGISTER DESCRIPTION
0x01C4 1000	0x01E1 2000	SPIGCR0	Global Control Register 0
0x01C4 1004	0x01E1 2004	SPIGCR1	Global Control Register 1
0x01C4 1008	0x01E1 2008	SPIINT0	Interrupt Register
0x01C4 100C	0x01E1 200C	SPILVL	Interrupt Level Register
0x01C4 1010	0x01E1 2010	SPIFLG	Flag Register
0x01C4 1014	0x01E1 2014	SPIPC0	Pin Control Register 0 (Pin Function)
0x01C4 1018	0x01E1 2018	SPIPC1	Pin Control Register 1 (Pin Direction)
0x01C4 101C	0x01E1 201C	SPIPC2	Pin Control Register 2 (Pin Data In)
0x01C4 1020	0x01E1 2020	SPIPC3	Pin Control Register 3 (Pin Data Out)
0x01C4 1024	0x01E1 2024	SPIPC4	Pin Control Register 4 (Pin Data Set)
0x01C4 1028	0x01E1 2028	SPIPC5	Pin Control Register 5 (Pin Data Clear)
0x01C4 102C	0x01E1 202C	Reserved	Reserved - Do not write to this register
0x01C4 1030	0x01E1 2030	Reserved	Reserved - Do not write to this register
0x01C4 1034	0x01E1 2034	Reserved	Reserved - Do not write to this register
0x01C4 1038	0x01E1 2038	SPIDAT0	Shift Register 0 (without format select)
0x01C4 103C	0x01E1 203C	SPIDAT1	Shift Register 1 (with format select)
0x01C4 1040	0x01E1 2040	SPIBUF	Buffer Register
0x01C4 1044	0x01E1 2044	SPIEMU	Emulation Register
0x01C4 1048	0x01E1 2048	SPIDELAY	Delay Register
0x01C4 104C	0x01E1 204C	SPIDEF	Default Chip Select Register
0x01C4 1050	0x01E1 2050	SPIFMT0	Format Register 0
0x01C4 1054	0x01E1 2054	SPIFMT1	Format Register 1
0x01C4 1058	0x01E1 2058	SPIFMT2	Format Register 2
0x01C4 105C	0x01E1 205C	SPIFMT3	Format Register 3
0x01C4 1060	0x01E1 2060	Reserved	Reserved - Do not write to this register
0x01C4 1064	0x01E1 2064	INTVEC1	Interrupt Vector for SPI INT1

Copyright © 2008–2014, Texas Instruments Incorporated

6.17.2 SPI Electrical Data/Timing

6.17.2.1 Serial Peripheral Interface (SPI) Timing

Table 6-54 through Table 6-69 assume testing over recommended operating conditions (see Figure 6-38 through Figure 6-41).

Table 6-54. General Timing Requirements for SPI0 Master Modes(1)

No.	PARAMETER			MIN	MAX	UNIT
1	$t_{c(SPC)M}$	Cycle Time, SPI0_CLK, All Master Modes		greater of 3P or 20	256P	ns
2	$t_{w(SPCH)M}$	Pulse Width High, SPI0_CLK, All Master Modes		$0.5t_{c(SPC)M}$ - 1		ns
3	$t_{w(SPCL)M}$	Pulse Width Low, SPI0_CLK, All Master Modes		$0.5t_{c(SPC)M}$ - 1		ns
4	$t_{d(SIMO_SPC)M}$	Delay, initial data bit valid on SPI0_SIMO after initial edge on SPI0_CLK(2)	Polarity = 0, Phase = 0, to SPI0_CLK rising		5	ns
			Polarity = 0, Phase = 1, to SPI0_CLK rising		$-0.5t_{c(SPC)M}$ + 5	
			Polarity = 1, Phase = 0, to SPI0_CLK falling		5	
			Polarity = 1, Phase = 1, to SPI0_CLK falling		$-0.5t_{c(SPC)M}$ + 5	
5	$t_{d(SPC_SIMO)M}$	Delay, subsequent bits valid on SPI0_SIMO after transmit edge of SPI0_CLK	Polarity = 0, Phase = 0, from SPI0_CLK rising		5	ns
			Polarity = 0, Phase = 1, from SPI0_CLK falling		5	
			Polarity = 1, Phase = 0, from SPI0_CLK falling		5	
			Polarity = 1, Phase = 1, from SPI0_CLK rising		5	
6	$t_{oh(SPC_SIMO)M}$	Output hold time, SPI0_SIMO valid after receive edge of SPI0_CLK	Polarity = 0, Phase = 0, from SPI0_CLK falling	$0.5t_{c(SPC)M}$ -3		ns
			Polarity = 0, Phase = 1, from SPI0_CLK rising	$0.5t_{c(SPC)M}$ -3		
			Polarity = 1, Phase = 0, from SPI0_CLK rising	$0.5t_{c(SPC)M}$ -3		
			Polarity = 1, Phase = 1, from SPI0_CLK falling	$0.5t_{c(SPC)M}$ -3		
7	$t_{su(SOMI_SPC)M}$	Input Setup Time, SPI0_SOMI valid before receive edge of SPI0_CLK	Polarity = 0, Phase = 0, to SPI0_CLK falling	0		ns
			Polarity = 0, Phase = 1, to SPI0_CLK rising	0		
			Polarity = 1, Phase = 0, to SPI0_CLK rising	0		
			Polarity = 1, Phase = 1, to SPI0_CLK falling	0		
8	$t_{ih(SPC_SOMI)M}$	Input Hold Time, SPI0_SOMI valid after receive edge of SPI0_CLK	Polarity = 0, Phase = 0, from SPI0_CLK falling	5		ns
			Polarity = 0, Phase = 1, from SPI0_CLK rising	5		
			Polarity = 1, Phase = 0, from SPI0_CLK rising	5		
			Polarity = 1, Phase = 1, from SPI0_CLK falling	5		

(1) P = SYSCLK2 period
(2) First bit may be MSB or LSB depending upon SPI configuration. MO(0) refers to first bit and MO(n) refers to last bit output on SPI0_SIMO. MI(0) refers to the first bit input and MI(n) refers to the last bit input on SPI0_SOMI.

Table 6-55. General Timing Requirements for SPI0 Slave Modes(1)

No.	PARAMETER			MIN	MAX	UNIT
9	$t_{c(SPC)S}$	Cycle Time, SPI0_CLK, All Slave Modes		greater of 3P or 40		ns
10	$t_{w(SPCH)S}$	Pulse Width High, SPI0_CLK, All Slave Modes		18		ns
11	$t_{w(SPCL)S}$	Pulse Width Low, SPI0_CLK, All Slave Modes		18		ns
12	$t_{su(SOMI_SPC)S}$	Setup time, transmit data written to SPI before initial clock edge from master.(2) (3)	Polarity = 0, Phase = 0, to SPI0_CLK rising	2P		ns
			Polarity = 0, Phase = 1, to SPI0_CLK rising	2P		
			Polarity = 1, Phase = 0, to SPI0_CLK falling	2P		
			Polarity = 1, Phase = 1, to SPI0_CLK falling	2P		
13	$t_{d(SPC_SOMI)S}$	Delay, subsequent bits valid on SPI0_SOMI after transmit edge of SPI0_CLK	Polarity = 0, Phase = 0, from SPI0_CLK rising		18.5	ns
			Polarity = 0, Phase = 1, from SPI0_CLK falling		18.5	
			Polarity = 1, Phase = 0, from SPI0_CLK falling		18.5	
			Polarity = 1, Phase = 1, from SPI0_CLK rising		18.5	
14	$t_{oh(SPC_SOMI)S}$	Output hold time, SPI0_SOMI valid after receive edge of SPI0_CLK	Polarity = 0, Phase = 0, from SPI0_CLK falling	$0.5t_{c(SPC)S}$ -3		ns
			Polarity = 0, Phase = 1, from SPI0_CLK rising	$0.5t_{c(SPC)S}$ -3		
			Polarity = 1, Phase = 0, from SPI0_CLK rising	$0.5t_{c(SPC)S}$ -3		
			Polarity = 1, Phase = 1, from SPI0_CLK falling	$0.5t_{c(SPC)S}$ -3		
15	$t_{su(SIMO_SPC)S}$	Input Setup Time, SPI0_SIMO valid before receive edge of SPI0_CLK	Polarity = 0, Phase = 0, to SPI0_CLK falling	0		ns
			Polarity = 0, Phase = 1, to SPI0_CLK rising	0		
			Polarity = 1, Phase = 0, to SPI0_CLK rising	0		
			Polarity = 1, Phase = 1, to SPI0_CLK falling	0		
16	$t_{ih(SPC_SIMO)S}$	Input Hold Time, SPI0_SIMO valid after receive edge of SPI0_CLK	Polarity = 0, Phase = 0, from SPI0_CLK falling	5		ns
			Polarity = 0, Phase = 1, from SPI0_CLK rising	5		
			Polarity = 1, Phase = 0, from SPI0_CLK rising	5		
			Polarity = 1, Phase = 1, from SPI0_CLK falling	5		

(1) P = SYSCLK2 period
(2) First bit may be MSB or LSB depending upon SPI configuration. SO(0) refers to first bit and SO(n) refers to last bit output on SPI0_SOMI. SI(0) refers to the first bit input and SI(n) refers to the last bit input on SPI0_SIMO.
(3) Measured from the termination of the write of new data to the SPI module, In analyzing throughput requirements, additional internal bus cycles must be accounted for to allow data to be written to the SPI module by the DSP CPU.

Copyright © 2008–2014, Texas Instruments Incorporated

Table 6-56. Additional(1) SPI0 Master Timings, 4-Pin Enable Option(2) (3)

No.	PARAMATER			MIN	MAX	UNIT
17	$t_{d(ENA_SPC)M}$	Delay from slave assertion of SPI0_ENA active to first SPI0_CLK from master.(4)	Polarity = 0, Phase = 0, to SPI0_CLK rising		3P + 3.6	ns
			Polarity = 0, Phase = 1, to SPI0_CLK rising		$0.5t_{c(SPC)M}$ + 3P + 3.6	
			Polarity = 1, Phase = 0, to SPI0_CLK falling		3P + 3.6	
			Polarity = 1, Phase = 1, to SPI0_CLK falling		$0.5t_{c(SPC)M}$ + 3P + 3.6	
18	$t_{d(SPC_ENA)M}$	Max delay for slave to deassert SPI0_ENA after final SPI0_CLK edge to ensure master does not begin the next transfer.(5)	Polarity = 0, Phase = 0, from SPI0_CLK falling		$0.5t_{c(SPC)M}$ + P + 5	ns
			Polarity = 0, Phase = 1, from SPI0_CLK falling		P + 5	
			Polarity = 1, Phase = 0, from SPI0_CLK rising		$0.5t_{c(SPC)M}$ + P + 5	
			Polarity = 1, Phase = 1, from SPI0_CLK rising		P + 5	

(1) These parameters are in addition to the general timings for SPI master modes (Table 6-54).
(2) P = SYSCLK2 period
(3) Figure shows only Polarity = 0, Phase = 0 as an example. Table gives parameters for all four master clocking modes.
(4) In the case where the master SPI is ready with new data before SPI0_ENA assertion.
(5) In the case where the master SPI is ready with new data before SPI0_EN A deassertion.

Table 6-57. Additional(1) SPI0 Master Timings, 4-Pin Chip Select Option(2) (3)

No.	PARAMATER			MIN	MAX	UNIT
19	$t_{d(SCS_SPC)M}$	Delay from SPI0_SCS active to first SPI0_CLK(4) (5)	Polarity = 0, Phase = 0, to SPI0_CLK rising		2P - 5	ns
			Polarity = 0, Phase = 1, to SPI0_CLK rising		$0.5t_{c(SPC)M}$ + 2P - 5	
			Polarity = 1, Phase = 0, to SPI0_CLK falling		2P - 5	
			Polarity = 1, Phase = 1, to SPI0_CLK falling		$0.5t_{c(SPC)M}$ + 2P - 5	
20	$t_{d(SPC_SCS)M}$	Delay from final SPI0_CLK edge to master deasserting SPI0_SCS (6) (7)	Polarity = 0, Phase = 0, from SPI0_CLK falling		$0.5t_{c(SPC)M}$ + P - 3	ns
			Polarity = 0, Phase = 1, from SPI0_CLK falling		P - 3	
			Polarity = 1, Phase = 0, from SPI0_CLK rising		$0.5t_{c(SPC)M}$ + P - 3	
			Polarity = 1, Phase = 1, from SPI0_CLK rising		P - 3	

(1) These parameters are in addition to the general timings for SPI master modes (Table 6-54).
(2) P = SYSCLK2 period
(3) Figure shows only Polarity = 0, Phase = 0 as an example. Table gives parameters for all four master clocking modes.
(4) In the case where the master SPI is ready with new data before SPI0_SCS assertion.
(5) This delay can be increased under software control by the register bit field SPIDELAY.C2TDELAY[4:0].
(6) Except for modes when SPIDAT1.CSHOLD is enabled and there is additional data to transmit. In this case, SPI0_SCS will remain asserted.
(7) This delay can be increased under software control by the register bit field SPIDELAY.T2CDELAY[4:0].

Copyright © 2008–2014, Texas Instruments Incorporated

Table 6-58. Additional[1] SPI0 Master Timings, 5-Pin Option[2] [3]

No.	PARAMATER			MIN	MAX	UNIT
18	$t_{d(SPC_ENA)M}$	Max delay for slave to deassert SPI0_ENA after final SPI0_CLK edge to ensure master does not begin the next transfer.[4]	Polarity = 0, Phase = 0, from SPI0_CLK falling		$0.5t_{c(SPC)M}$ + P + 5	ns
			Polarity = 0, Phase = 1, from SPI0_CLK falling		P + 5	
			Polarity = 1, Phase = 0, from SPI0_CLK rising		$0.5t_{c(SPC)M}$ + P + 5	
			Polarity = 1, Phase = 1, from SPI0_CLK rising		P + 5	
20	$t_{d(SPC_SCS)M}$	Delay from final SPI0_CLK edge to master deasserting SPI0_SCS [5] [6]	Polarity = 0, Phase = 0, from SPI0_CLK falling	$0.5t_{c(SPC)M}$ + P - 3		ns
			Polarity = 0, Phase = 1, from SPI0_CLK falling	P - 3		
			Polarity = 1, Phase = 0, from SPI0_CLK rising	$0.5t_{c(SPC)M}$ + P -3		
			Polarity = 1, Phase = 1, from SPI0_CLK rising	P - 3		
21	$t_{d(SCSL_ENAL)M}$	Max delay for slave SPI to drive SPI0_ENA valid after master asserts SPI0_SCS to delay the master from beginning the next transfer,			C2TDELAY + P	ns
22	$t_{d(SCS_SPC)M}$	Delay from SPI0_SCS active to first SPI0_CLK[7] [8] [9]	Polarity = 0, Phase = 0, to SPI0_CLK rising	2P -5		ns
			Polarity = 0, Phase = 1, to SPI0_CLK rising	$0.5t_{c(SPC)M}$ + 2P -5		
			Polarity = 1, Phase = 0, to SPI0_CLK falling	2P -5		
			Polarity = 1, Phase = 1, to SPI0_CLK falling	$0.5t_{c(SPC)M}$ + 2P -5		
23	$t_{d(ENA_SPC)M}$	Delay from assertion of SPI0_ENA low to first SPI0_CLK edge.[10]	Polarity = 0, Phase = 0, to SPI0_CLK rising		3P + 3.6	ns
			Polarity = 0, Phase = 1, to SPI0_CLK rising		$0.5t_{c(SPC)M}$ + 3P + 3.6	
			Polarity = 1, Phase = 0, to SPI0_CLK falling		3P + 3.6	
			Polarity = 1, Phase = 1, to SPI0_CLK falling		$0.5t_{c(SPC)M}$ + 3P + 3.6	

(1) These parameters are in addition to the general timings for SPI master modes (Table 6-55).
(2) P = SYSCLK2 period
(3) Figure shows only Polarity = 0, Phase = 0 as an example. Table gives parameters for all four master clocking modes.
(4) In the case where the master SPI is ready with new data before SPI0_ENA deassertion.
(5) Except for modes when SPIDAT1.CSHOLD is enabled and there is additional data to transmit. In this case, SPI0_SCS will remain asserted.
(6) This delay can be increased under software control by the register bit field SPIDELAY.T2CDELAY[4:0].
(7) If SPI0_ENA is asserted immediately such that the transmission is not delayed by SPI0_ENA.
(8) In the case where the master SPI is ready with new data before SPI0_SCS assertion.
(9) This delay can be increased under software control by the register bit field SPIDELAY.C2TDELAY[4:0].
(10) If SPI0_ENA was initially deasserted high and SPI0_CLK is delayed.

Copyright © 2008–2014, Texas Instruments Incorporated

Table 6-59. Additional[1] SPI0 Slave Timings, 4-Pin Enable Option[2] [3]

No.	PARAMATER			MIN	MAX	UNIT
24	$t_{d(SPC_ENAH)S}$	Delay from final SPI0_CLK edge to slave deasserting SPI0_ENA.	Polarity = 0, Phase = 0, from SPI0_CLK falling	1.5 P -3	2.5 P + 18.5	ns
			Polarity = 0, Phase = 1, from SPI0_CLK falling	$-0.5t_{c(SPC)M}$ + 1.5 P -3	$-0.5t_{c(SPC)M}$ + 2.5 P + 18.5	
			Polarity = 1, Phase = 0, from SPI0_CLK rising	1.5 P -3	2.5 P + 18.5	
			Polarity = 1, Phase = 1, from SPI0_CLK rising	$-0.5t_{c(SPC)M}$ + 1.5 P -3	$-0.5t_{c(SPC)M}$ + 2.5 P + 18.5	

(1) These parameters are in addition to the general timings for SPI slave modes (Table 6-55).
(2) P = SYSCLK2 period
(3) Figure shows only Polarity = 0, Phase = 0 as an example. Table gives parameters for all four slave clocking modes.

Table 6-60. Additional[1] SPI0 Slave Timings, 4-Pin Chip Select Option[2] [3]

No.	PARAMATER			MIN	MAX	UNIT
25	$t_{d(SCSL_SPC)S}$	Required delay from SPI0_SCS asserted at slave to first SPI0_CLK edge at slave.		2P		ns
26	$t_{d(SPC_SCSH)S}$	Required delay from final SPI0_CLK edge before SPI0_SCS is deasserted.	Polarity = 0, Phase = 0, from SPI0_CLK falling	$0.5t_{c(SPC)M}$ + P+5		ns
			Polarity = 0, Phase = 1, from SPI0_CLK falling	P+5		
			Polarity = 1, Phase = 0, from SPI0_CLK rising	$0.5t_{c(SPC)M}$ + P+5		
			Polarity = 1, Phase = 1, from SPI0_CLK rising	P+5		
27	$t_{ena(SCSL_SOMI)S}$	Delay from master asserting SPI0_SCS to slave driving SPI0_SOMI valid			P + 18.5	ns
28	$t_{dis(SCSH_SOMI)S}$	Delay from master deasserting SPI0_SCS to slave 3-stating SPI0_SOMI			P + 18.5	ns

(1) These parameters are in addition to the general timings for SPI slave modes (Table 6-55).
(2) P = SYSCLK2 period
(3) Figure shows only Polarity = 0, Phase = 0 as an example. Table gives parameters for all four slave clocking modes.

Copyright © 2008–2014, Texas Instruments Incorporated

Table 6-61. Additional[1] SPI0 Slave Timings, 5-Pin Option[2] [3]

No.	PARAMATER			MIN	MAX	UNIT
25	$t_{d(SCSL_SPC)S}$	Required delay from $\overline{SPI0_SCS}$ asserted at slave to first SPI0_CLK edge at slave.		2P		ns
26	$t_{d(SPC_SCSH)S}$	Required delay from final SPI0_CLK edge before $\overline{SPI0_SCS}$ is deasserted.	Polarity = 0, Phase = 0, from SPI0_CLK falling	$0.5t_{c(SPC)M}$ + P + 5		ns
			Polarity = 0, Phase = 1, from SPI0_CLK falling	P + 5		
			Polarity = 1, Phase = 0, from SPI0_CLK rising	$0.5t_{c(SPC)M}$ + P + 5		
			Polarity = 1, Phase = 1, from SPI0_CLK rising	P + 5		
27	$t_{ena(SCSL_SOMI)S}$	Delay from master asserting $\overline{SPI0_SCS}$ to slave driving SPI0_SOMI valid			P + 18.5	ns
28	$t_{dis(SCSH_SOMI)S}$	Delay from master deasserting $\overline{SPI0_SCS}$ to slave 3-stating SPI0_SOMI			P + 18.5	ns
29	$t_{ena(SCSL_ENA)S}$	Delay from master deasserting $\overline{SPI0_SCS}$ to slave driving $\overline{SPI0_ENA}$ valid			18.5	ns
30	$t_{dis(SPC_ENA)S}$	Delay from final clock receive edge on SPI0_CLK to slave 3-stating or driving high $\overline{SPI0_ENA}$.[4]	Polarity = 0, Phase = 0, from SPI0_CLK falling		2.5 P + 18.5	ns
			Polarity = 0, Phase = 1, from SPI0_CLK rising		2.5 P + 18.5	
			Polarity = 1, Phase = 0, from SPI0_CLK rising		2.5 P + 18.5	
			Polarity = 1, Phase = 1, from SPI0_CLK falling		2.5 P + 18.5	

(1) These parameters are in addition to the general timings for SPI slave modes (Table 6-55).
(2) P = SYSCLK2 period
(3) Figure shows only Polarity = 0, Phase = 0 as an example. Table gives parameters for all four slave clocking modes.
(4) $\overline{SPI0_ENA}$ is driven low after the transmission completes if the SPIINT0.ENABLE_HIGHZ bit is programmed to 0. Otherwise it is 3-stated. If 3-stated, an external pullup resistor should be used to provide a valid level to the master. This option is useful when tying several SPI slave devices to a single master.

Table 6-62. General Timing Requirements for SPI1 Master Modes[1]

No.	PARAMATER			MIN	MAX	UNIT
1	$t_{c(SPC)M}$	Cycle Time, SPI1_CLK, All Master Modes		greater of 3P or 20 ns	256P	ns
2	$t_{w(SPCH)M}$	Pulse Width High, SPI1_CLK, All Master Modes		$0.5t_{c(SPC)M}$ - 1		ns
3	$t_{w(SPCL)M}$	Pulse Width Low, SPI1_CLK, All Master Modes		$0.5t_{c(SPC)M}$ - 1		ns
4	$t_{d(SIMO_SPC)M}$	Delay, initial data bit valid on SPI1_SIMO to initial edge on SPI1_CLK[2]	Polarity = 0, Phase = 0, to SPI1_CLK rising		5	ns
			Polarity = 0, Phase = 1, to SPI1_CLK rising		- $0.5t_{c(SPC)M}$ + 5	
			Polarity = 1, Phase = 0, to SPI1_CLK falling		5	
			Polarity = 1, Phase = 1, to SPI1_CLK falling		- $0.5t_{c(SPC)M}$ + 5	

(1) P = SYSCLK2 period
(2) First bit may be MSB or LSB depending upon SPI configuration. MO(0) refers to first bit and MO(n) refers to last bit output on SPI1_SIMO. MI(0) refers to the first bit input and MI(n) refers to the last bit input on SPI1_SOMI.

Copyright © 2008–2014, Texas Instruments Incorporated

Table 6-62. General Timing Requirements for SPI1 Master Modes[1] (continued)

No.	PARAMATER			MIN	MAX	UNIT
5	$t_{d(SPC_SIMO)M}$	Delay, subsequent bits valid on SPI1_SIMO after transmit edge of SPI1_CLK	Polarity = 0, Phase = 0, from SPI1_CLK rising		5	ns
			Polarity = 0, Phase = 1, from SPI1_CLK falling		5	
			Polarity = 1, Phase = 0, from SPI1_CLK falling		5	
			Polarity = 1, Phase = 1, from SPI1_CLK rising		5	
6	$t_{oh(SPC_SIMO)M}$	Output hold time, SPI1_SIMO valid after receive edge of SPI1_CLK	Polarity = 0, Phase = 0, from SPI1_CLK falling	$0.5t_{c(SPC)M}$ -3		ns
			Polarity = 0, Phase = 1, from SPI1_CLK rising	$0.5t_{c(SPC)M}$ -3		
			Polarity = 1, Phase = 0, from SPI1_CLK rising	$0.5t_{c(SPC)M}$ -3		
			Polarity = 1, Phase = 1, from SPI1_CLK falling	$0.5t_{c(SPC)M}$ -3		
7	$t_{su(SOMI_SPC)M}$	Input Setup Time, SPI1_SOMI valid before receive edge of SPI1_CLK	Polarity = 0, Phase = 0, to SPI1_CLK falling	0		ns
			Polarity = 0, Phase = 1, to SPI1_CLK rising	0		
			Polarity = 1, Phase = 0, to SPI1_CLK rising	0		
			Polarity = 1, Phase = 1, to SPI1_CLK falling	0		
8	$t_{ih(SPC_SOMI)M}$	Input Hold Time, SPI1_SOMI valid after receive edge of SPI1_CLK	Polarity = 0, Phase = 0, from SPI1_CLK falling	5		ns
			Polarity = 0, Phase = 1, from SPI1_CLK rising	5		
			Polarity = 1, Phase = 0, from SPI1_CLK rising	5		
			Polarity = 1, Phase = 1, from SPI1_CLK falling	5		

Table 6-63. General Timing Requirements for SPI1 Slave Modes[1]

No.	PARAMATER		MIN	MAX	UNIT
9	$t_{c(SPC)S}$	Cycle Time, SPI1_CLK, All Slave Modes	greater of 3P or 40 ns		ns
10	$t_{w(SPCH)S}$	Pulse Width High, SPI1_CLK, All Slave Modes	18		ns
11	$t_{w(SPCL)S}$	Pulse Width Low, SPI1_CLK, All Slave Modes	18		ns

(1) P = SYSCLK2 period

Copyright © 2008–2014, Texas Instruments Incorporated

Table 6-63. General Timing Requirements for SPI1 Slave Modes[1] (continued)

No.	PARAMATER			MIN	MAX	UNIT
12	$t_{su(SOMI_SPC)S}$	Setup time, transmit data written to SPI before initial clock edge from master.[2] [3]	Polarity = 0, Phase = 0, to SPI1_CLK rising	2P		ns
			Polarity = 0, Phase = 1, to SPI1_CLK rising	2P		
			Polarity = 1, Phase = 0, to SPI1_CLK falling	2P		
			Polarity = 1, Phase = 1, to SPI1_CLK falling	2P		
13	$t_{d(SPC_SOMI)S}$	Delay, subsequent bits valid on SPI1_SOMI after transmit edge of SPI1_CLK	Polarity = 0, Phase = 0, from SPI1_CLK rising		19	ns
			Polarity = 0, Phase = 1, from SPI1_CLK falling		19	
			Polarity = 1, Phase = 0, from SPI1_CLK falling		19	
			Polarity = 1, Phase = 1, from SPI1_CLK rising		19	
14	$t_{oh(SPC_SOMI)S}$	Output hold time, SPI1_SOMI valid after receive edge of SPI1_CLK	Polarity = 0, Phase = 0, from SPI1_CLK falling	$0.5t_{c(SPC)S}$ -3		ns
			Polarity = 0, Phase = 1, from SPI1_CLK rising	$0.5t_{c(SPC)S}$ -3		
			Polarity = 1, Phase = 0, from SPI1_CLK rising	$0.5t_{c(SPC)S}$ -3		
			Polarity = 1, Phase = 1, from SPI1_CLK falling	$0.5t_{c(SPC)S}$ -3		
15	$t_{su(SIMO_SPC)S}$	Input Setup Time, SPI1_SIMO valid before receive edge of SPI1_CLK	Polarity = 0, Phase = 0, to SPI1_CLK falling	0		ns
			Polarity = 0, Phase = 1, to SPI1_CLK rising	0		
			Polarity = 1, Phase = 0, to SPI1_CLK rising	0		
			Polarity = 1, Phase = 1, to SPI1_CLK falling	0		
16	$t_{ih(SPC_SIMO)S}$	Input Hold Time, SPI1_SIMO valid after receive edge of SPI1_CLK	Polarity = 0, Phase = 0, from SPI1_CLK falling	5		ns
			Polarity = 0, Phase = 1, from SPI1_CLK rising	5		
			Polarity = 1, Phase = 0, from SPI1_CLK rising	5		
			Polarity = 1, Phase = 1, from SPI1_CLK falling	5		

(2) First bit may be MSB or LSB depending upon SPI configuration. SO(0) refers to first bit and SO(n) refers to last bit output on SPI1_SOMI. SI(0) refers to the first bit input and SI(n) refers to the last bit input on SPI1_SIMO.
(3) Measured from the termination of the write of new data to the SPI module, In analyzing throughput requirements, additional internal bus cycles must be accounted for to allow data to be written to the SPI module by the DSP CPU.

Copyright © 2008–2014, Texas Instruments Incorporated

Table 6-64. Additional(1) SPI1 Master Timings, 4-Pin Enable Option(2) (3)

No.	PARAMETER			MIN	MAX	UNIT
17	$t_{d(EN\ A_SPC)M}$	Delay from slave assertion of SPI1_ENA active to first SPI1_CLK from master.(4)	Polarity = 0, Phase = 0, to SPI1_CLK rising		3P + 3	ns
			Polarity = 0, Phase = 1, to SPI1_CLK rising		$0.5t_{c(SPC)M}$ + 3P + 3	
			Polarity = 1, Phase = 0, to SPI1_CLK falling		3P + 3	
			Polarity = 1, Phase = 1, to SPI1_CLK falling		$0.5t_{c(SPC)M}$ + 3P + 3	
18	$t_{d(SPC_ENA)M}$	Max delay for slave to deassert SPI1_ENA after final SPI1_CLK edge to ensure master does not begin the next transfer.(5)	Polarity = 0, Phase = 0, from SPI1_CLK falling		$0.5t_{c(SPC)M}$ + P + 5	ns
			Polarity = 0, Phase = 1, from SPI1_CLK falling		P + 5	
			Polarity = 1, Phase = 0, from SPI1_CLK rising		$0.5t_{c(SPC)M}$ + P + 5	
			Polarity = 1, Phase = 1, from SPI1_CLK rising		P + 5	

(1) These parameters are in addition to the general timings for SPI master modes (Table 6-62).
(2) P = SYSCLK2 period
(3) Figure shows only Polarity = 0, Phase = 0 as an example. Table gives parameters for all four master clocking modes.
(4) In the case where the master SPI is ready with new data before SPI1_ENA assertion.
(5) In the case where the master SPI is ready with new data before SPI1_ENA deassertion.

Table 6-65. Additional(1) SPI1 Master Timings, 4-Pin Chip Select Option(2) (3)

No.	PARAMATER			MIN	MAX	UNIT
19	$t_{d(SCS_SPC)M}$	Delay from SPI1_SCS active to first SPI1_CLK(4) (5)	Polarity = 0, Phase = 0, to SPI1_CLK rising	2P -5		ns
			Polarity = 0, Phase = 1, to SPI1_CLK rising	$0.5t_{c(SPC)M}$ + 2P -5		
			Polarity = 1, Phase = 0, to SPI1_CLK falling	2P -5		
			Polarity = 1, Phase = 1, to SPI1_CLK falling	$0.5t_{c(SPC)M}$ + 2P -5		
20	$t_{d(SPC_SCS)M}$	Delay from final SPI1_CLK edge to master deasserting SPI1_SCS (6) (7)	Polarity = 0, Phase = 0, from SPI1_CLK falling	$0.5t_{c(SPC)M}$ + P - 3		ns
			Polarity = 0, Phase = 1, from SPI1_CLK falling	P - 3		
			Polarity = 1, Phase = 0, from SPI1_CLK rising	$0.5t_{c(SPC)M}$ + P -3		
			Polarity = 1, Phase = 1, from SPI1_CLK rising	P - 3		

(1) These parameters are in addition to the general timings for SPI master modes (Table 6-62).
(2) P = SYSCLK2 period
(3) Figure shows only Polarity = 0, Phase = 0 as an example. Table gives parameters for all four master clocking modes.
(4) In the case where the master SPI is ready with new data before SPI1_SCS assertion.
(5) This delay can be increased under software control by the register bit field SPIDELAY.C2TDELAY[4:0].
(6) Except for modes when SPIDAT1.CSHOLD is enabled and there is additional data to transmit. In this case, SPI1_SCS will remain asserted.
(7) This delay can be increased under software control by the register bit field SPIDELAY.T2CDELAY[4:0].

Copyright © 2008–2014, Texas Instruments Incorporated

Table 6-66. Additional[1] SPI1 Master Timings, 5-Pin Option[2] [3]

No.	PARAMATER			MIN	MAX	UNIT
18	$t_{d(SPC_ENA)M}$	Max delay for slave to deassert SPI1_ENA after final SPI1_CLK edge to ensure master does not begin the next transfer.[4]	Polarity = 0, Phase = 0, from SPI1_CLK falling		$0.5t_{c(SPC)M}$+P+5	ns
			Polarity = 0, Phase = 1, from SPI1_CLK falling		P+5	
			Polarity = 1, Phase = 0, from SPI1_CLK rising		$0.5t_{c(SPC)M}$+P+5	
			Polarity = 1, Phase = 1, from SPI1_CLK rising		P+5	
20	$t_{d(SPC_SCS)M}$	Delay from final SPI1_CLK edge to master deasserting SPI1_SCS [5] [6]	Polarity = 0, Phase = 0, from SPI1_CLK falling	$0.5t_{c(SPC)M}$ + P -3		ns
			Polarity = 0, Phase = 1, from SPI1_CLK falling	P - 3		
			Polarity = 1, Phase = 0, from SPI1_CLK rising	$0.5t_{c(SPC)M}$+ P -3		
			Polarity = 1, Phase = 1, from SPI1_CLK rising	P - 3		
21	$t_{d(SCSL_ENAL)M}$	Max delay for slave SPI to drive SPI1_ENA valid after master asserts SPI1_SCS to delay the master from beginning the next transfer,			C2TDELAY + P	ns
22	$t_{d(SCS_SPC)M}$	Delay from SPI1_SCS active to first SPI1_CLK[7] [8] [9]	Polarity = 0, Phase = 0, to SPI1_CLK rising	2P -5		ns
			Polarity = 0, Phase = 1, to SPI1_CLK rising	$0.5t_{c(SPC)M}$ + 2P -5		
			Polarity = 1, Phase = 0, to SPI1_CLK falling	2P -5		
			Polarity = 1, Phase = 1, to SPI1_CLK falling	$0.5t_{c(SPC)M}$ + 2P -5		
23	$t_{d(ENA_SPC)M}$	Delay from assertion of SPI1_ENA low to first SPI1_CLK edge.[10]	Polarity = 0, Phase = 0, to SPI1_CLK rising		3P + 3	ns
			Polarity = 0, Phase = 1, to SPI1_CLK rising		$0.5t_{c(SPC)M}$ + 3P + 3	
			Polarity = 1, Phase = 0, to SPI1_CLK falling		3P + 3	
			Polarity = 1, Phase = 1, to SPI1_CLK falling		$0.5t_{c(SPC)M}$ + 3P + 3	

(1) These parameters are in addition to the general timings for SPI master modes (Table 6-63).
(2) P = SYSCLK2 period
(3) Figure shows only Polarity = 0, Phase = 0 as an example. Table gives parameters for all four master clocking modes.
(4) In the case where the master SPI is ready with new data before SPI1_ENA deassertion.
(5) Except for modes when SPIDAT1.CSHOLD is enabled and there is additional data to transmit. In this case, SPI1_SCS will remain asserted.
(6) This delay can be increased under software control by the register bit field SPIDELAY.T2CDELAY[4:0].
(7) If SPI1_ENA is asserted immediately such that the transmission is not delayed by SPI1_ENA.
(8) In the case where the master SPI is ready with new data before SPI1_SCS assertion.
(9) This delay can be increased under software control by the register bit field SPIDELAY.C2TDELAY[4:0].
(10) If SPI1_ENA was initially deasserted high and SPI1_CLK is delayed.

Copyright © 2008–2014, Texas Instruments Incorporated

Table 6-67. Additional(1) SPI1 Slave Timings, 4-Pin Enable Option(2) (3)

No.	PARAMETER			MIN	MAX	UNIT
24	$t_{d(SPC_ENAH)S}$	Delay from final SPI1_CLK edge to slave deasserting SPI1_ENA.	Polarity = 0, Phase = 0, from SPI1_CLK falling	1.5 P -3	2.5 P + 19	ns
			Polarity = 0, Phase = 1, from SPI1_CLK falling	$-0.5t_{c(SPC)M}$ + 1.5 P -3	$-0.5t_{c(SPC)M}$ + 2.5 P + 19	
			Polarity = 1, Phase = 0, from SPI1_CLK rising	1.5 P -3	2.5 P + 19	
			Polarity = 1, Phase = 1, from SPI1_CLK rising	$-0.5t_{c(SPC)M}$ + 1.5 P -3	$-0.5t_{c(SPC)M}$ + 2.5 P + 19	

(1) These parameters are in addition to the general timings for SPI slave modes (Table 6-63).
(2) P = SYSCLK2 period
(3) Figure shows only Polarity = 0, Phase = 0 as an example. Table gives parameters for all four slave clocking modes.

Table 6-68. Additional(1) SPI1 Slave Timings, 4-Pin Chip Select Option(2) (3)

No.	PARAMETER			MIN	MAX	UNIT
25	$t_{d(SCSL_SPC)S}$	Required delay from SPI1_SCS asserted at slave to first SPI1_CLK edge at slave.		2P		ns
26	$t_{d(SPC_SCSH)S}$	Required delay from final SPI1_CLK edge before SPI1_SCS is deasserted.	Polarity = 0, Phase = 0, from SPI1_CLK falling	$0.5t_{c(SPC)M}$ + P + 5		ns
			Polarity = 0, Phase = 1, from SPI1_CLK falling	P + 5		
			Polarity = 1, Phase = 0, from SPI1_CLK rising	$0.5t_{c(SPC)M}$ + P + 5		
			Polarity = 1, Phase = 1, from SPI1_CLK rising	P + 5		
27	$t_{ena(SCSL_SOMI)S}$	Delay from master asserting SPI1_SCS to slave driving SPI1_SOMI valid			P + 19	ns
28	$t_{dis(SCSH_SOMI)S}$	Delay from master deasserting SPI1_SCS to slave 3-stating SPI1_SOMI			P + 19	ns

(1) These parameters are in addition to the general timings for SPI slave modes (Table 6-63).
(2) P = SYSCLK2 period
(3) Figure shows only Polarity = 0, Phase = 0 as an example. Table gives parameters for all four slave clocking modes.

Table 6-69. Additional(1) SPI1 Slave Timings, 5-Pin Option(2) (3)

No.	PARAMETER			MIN	MAX	UNIT
25	$t_{d(SCSL_SPC)S}$	Required delay from SPI1_SCS asserted at slave to first SPI1_CLK edge at slave.		2P		ns
26	$t_{d(SPC_SCSH)S}$	Required delay from final SPI1_CLK edge before SPI1_SCS is deasserted.	Polarity = 0, Phase = 0, from SPI1_CLK falling	$0.5t_{c(SPC)M}$ + P + 5		ns
			Polarity = 0, Phase = 1, from SPI1_CLK falling	P + 5		
			Polarity = 1, Phase = 0, from SPI1_CLK rising	$0.5t_{c(SPC)M}$ + P + 5		
			Polarity = 1, Phase = 1, from SPI1_CLK rising	P + 5		
27	$t_{ena(SCSL_SOMI)S}$	Delay from master asserting SPI1_SCS to slave driving SPI1_SOMI valid			P + 19	ns
28	$t_{dis(SCSH_SOMI)S}$	Delay from master deasserting SPI1_SCS to slave 3-stating SPI1_SOMI			P + 19	ns
29	$t_{ena(SCSL_ENA)S}$	Delay from master deasserting SPI1_SCS to slave driving SPI1_ENA valid			19	ns

(1) These parameters are in addition to the general timings for SPI slave modes (Table 6-63).
(2) P = SYSCLK2 period
(3) Figure shows only Polarity = 0, Phase = 0 as an example. Table gives parameters for all four slave clocking modes.

Copyright © 2008–2014, Texas Instruments Incorporated

Table 6-69. Additional[1] SPI1 Slave Timings, 5-Pin Option[2] [3] (continued)

No.	PARAMETER			MIN	MAX	UNIT
30	$t_{dis(SPC_ENA)S}$	Delay from final clock receive edge on SPI1_CLK to slave 3-stating or driving high $\overline{\text{SPI1_ENA}}$.[4]	Polarity = 0, Phase = 0, from SPI1_CLK falling		2.5 P + 19	ns
			Polarity = 0, Phase = 1, from SPI1_CLK rising		2.5 P + 19	
			Polarity = 1, Phase = 0, from SPI1_CLK rising		2.5 P + 19	
			Polarity = 1, Phase = 1, from SPI1_CLK falling		2.5 P + 19	

(4) $\overline{\text{SPI1_ENA}}$ is driven low after the transmission completes if the SPIINT0.ENABLE_HIGHZ bit is programmed to 0. Otherwise it is 3-stated. If 3-stated, an external pullup resistor should be used to provide a valid level to the master. This option is useful when tying several SPI slave devices to a single master.

Copyright © 2008–2014, Texas Instruments Incorporated

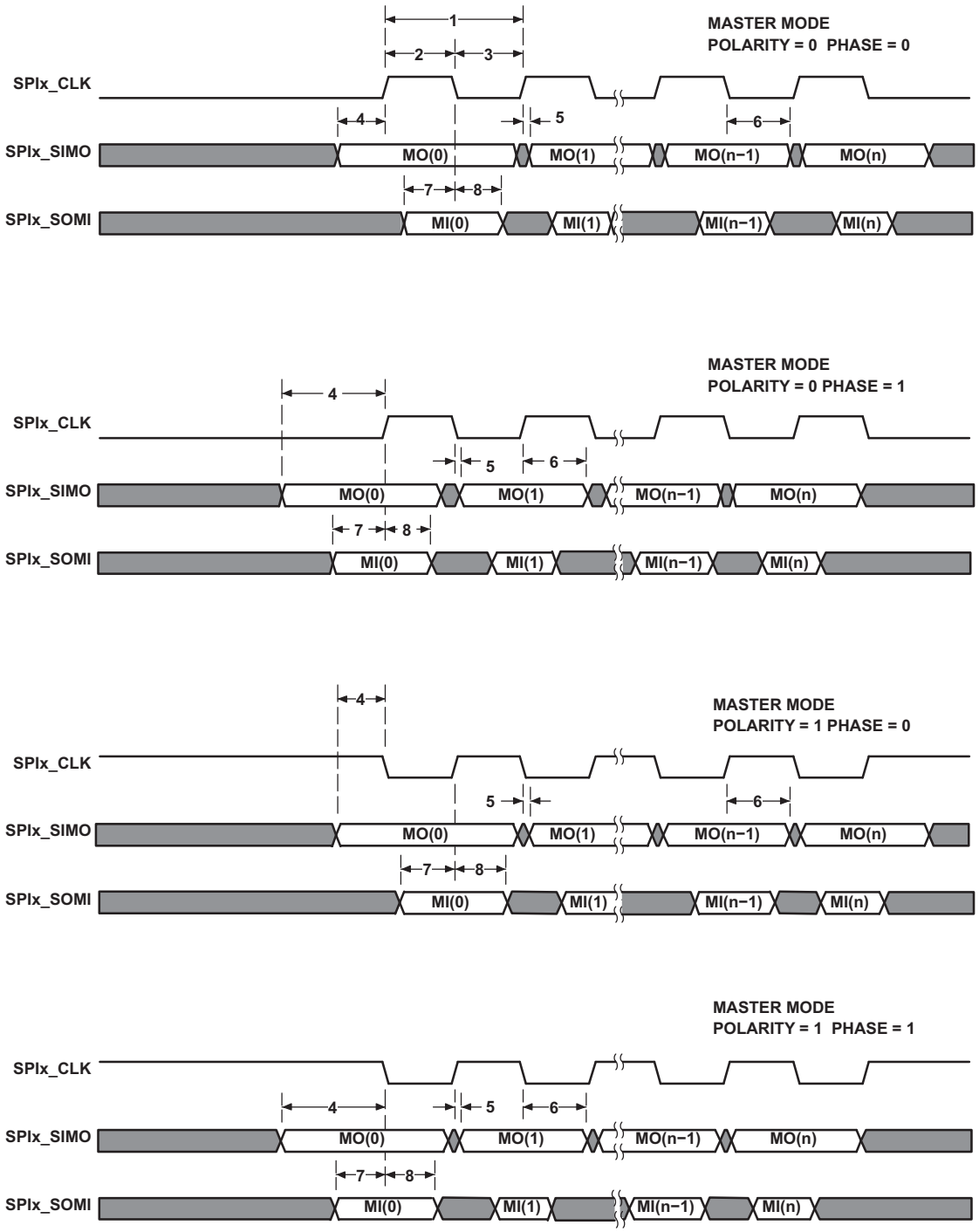

Figure 6-38. SPI Timings—Master Mode

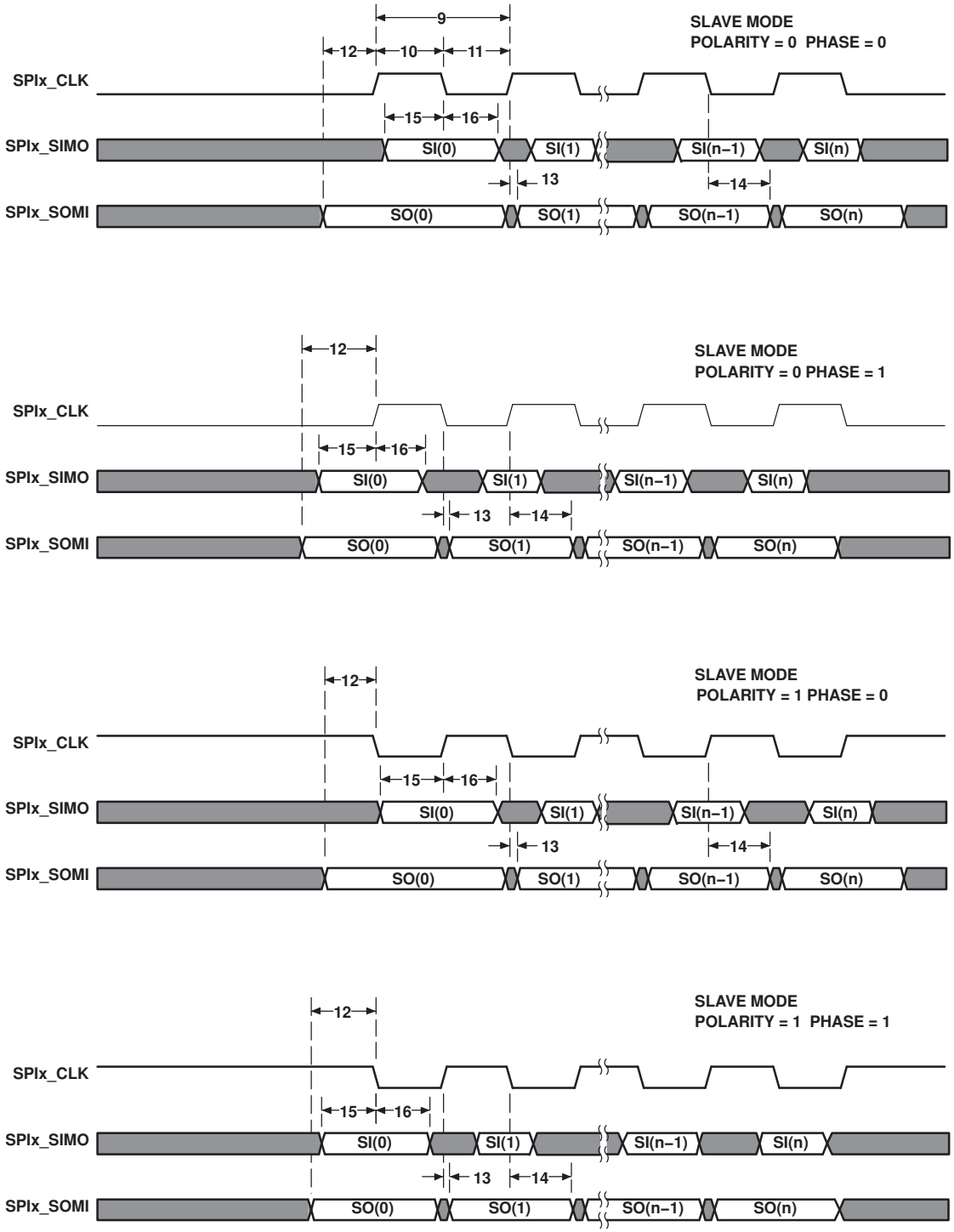

Figure 6-39. SPI Timings—Slave Mode

Copyright © 2008–2014, Texas Instruments Incorporated

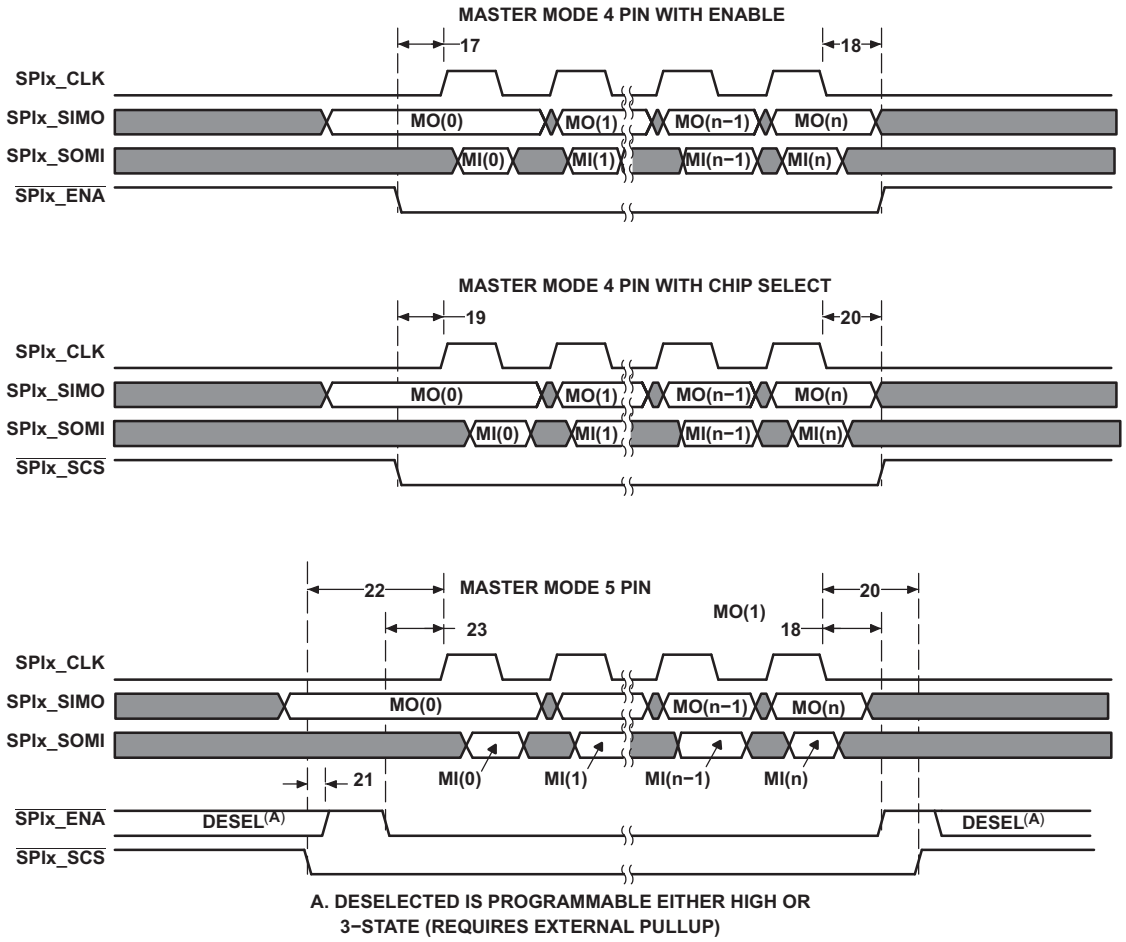

Figure 6-40. SPI Timings—Master Mode (4-Pin and 5-Pin)

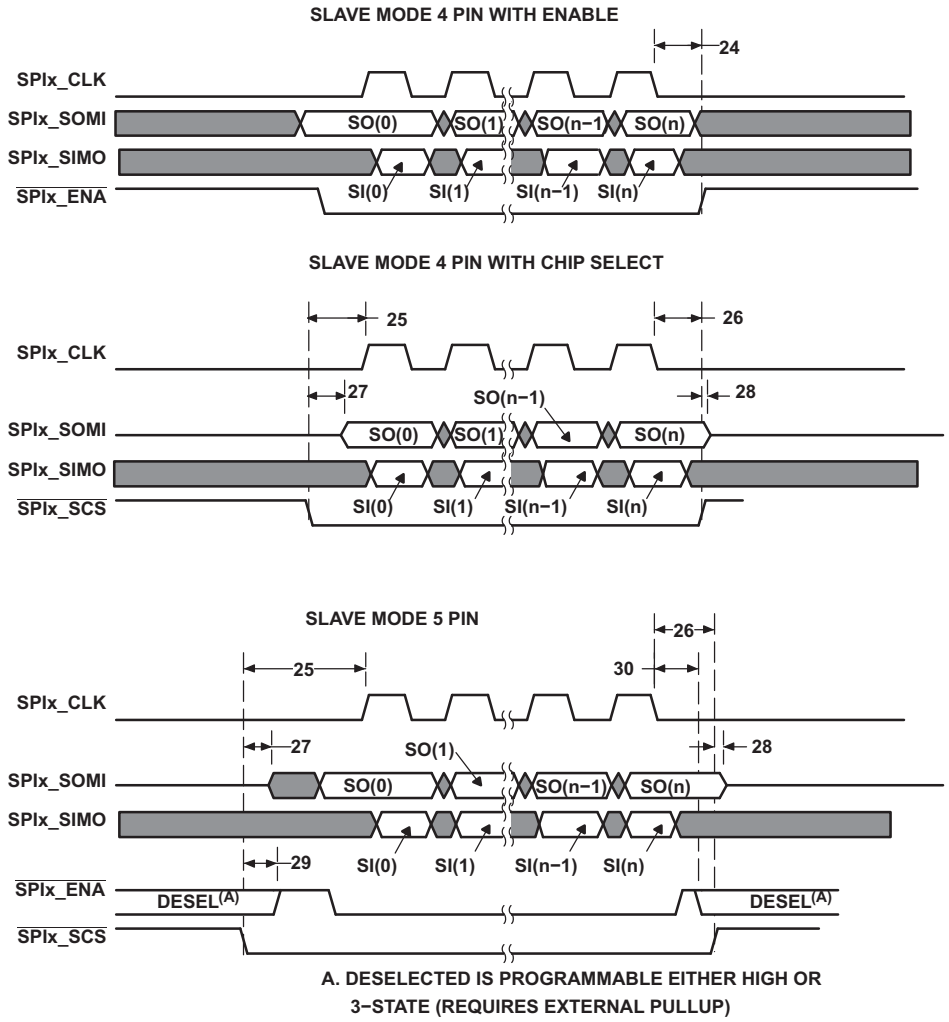

Figure 6-41. SPI Timings—Slave Mode (4-Pin and 5-Pin)

Copyright © 2008–2014, Texas Instruments Incorporated

6.18 Enhanced Capture (eCAP) Peripheral

The C6745/6747 device contains up to three enhanced capture (eCAP) modules. Figure 6-42 shows a functional block diagram of a module. See the *TMS320C6745/C6747 DSP Peripherals Overview Reference Guide.* (SPRUFK9) for more details.

Uses for ECAP include:

- Speed measurements of rotating machinery (e.g. toothed sprockets sensed via Hall sensors)
- Elapsed time measurements between position sensor triggers
- Period and duty cycle measurements of Pulse train signals
- Decoding current or voltage amplitude derived from cuty cycle encoded current/voltage sensors

The ECAP module described in this specification includes the following features:

- 32 bit time base
- 4 event time-stamp registers (each 32 bits)
- Edge polarity selection for up to 4 sequenced time-stamp capture events
- Interrupt on either of the 4 events
- Single shot capture of up to 4 event time-stamps
- Continuous mode capture of time-stamps in a 4 deep circular buffer
- Absolute time-stamp capture
- Difference mode time-stamp capture
- All the above resources are dedicated to a single input pin

The eCAP modules are clocked at the SYSCLK2 rate.

Copyright © 2008–2014, Texas Instruments Incorporated

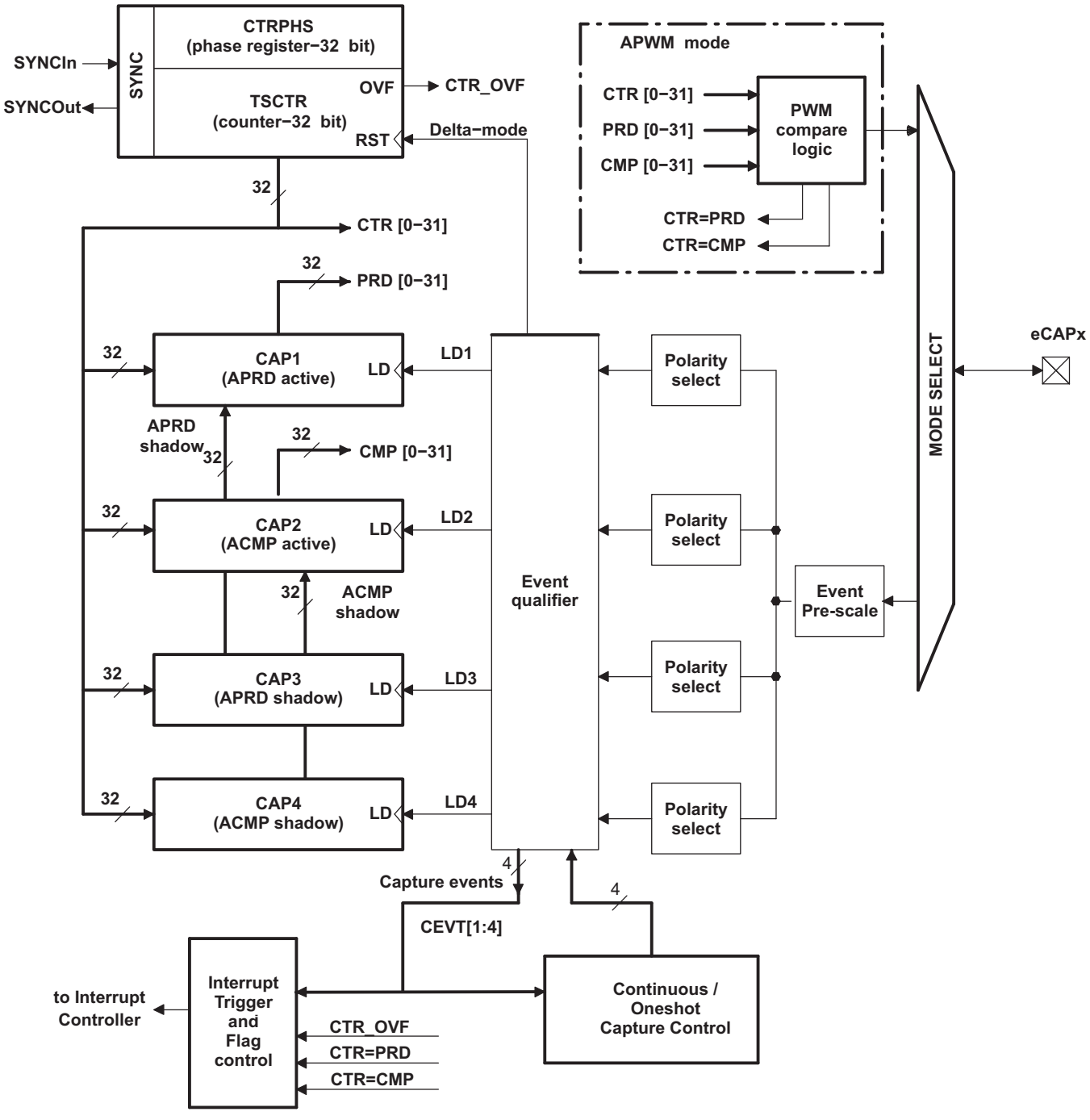

Figure 6-42. eCAP Functional Block Diagram

Copyright © 2008–2014, Texas Instruments Incorporated

Table 6-70 is the list of the ECAP registers.

Table 6-70. ECAPx Configuration Registers

ECAP0 BYTE ADDRESS	ECAP1 BYTE ADDRESS	ECAP2 BYTE ADDRESS	ACRONYM	REGISTER DESCRIPTION
0x01F0 6000	0x01F0 7000	0x01F0 8000	TSCTR	Time-Stamp Counter
0x01F0 6004	0x01F0 7004	0x01F0 8004	CTRPHS	Counter Phase Offset Value Register
0x01F0 6008	0x01F0 7008	0x01F0 8008	CAP1	Capture 1 Register
0x01F0 600C	0x01F0 700C	0x01F0 800C	CAP2	Capture 2 Register
0x01F0 6010	0x01F0 7010	0x01F0 8010	CAP3	Capture 3 Register
0x01F0 6014	0x01F0 7014	0x01F0 8014	CAP4	Capture 4 Register
0x01F0 6028	0x01F0 7028	0x01F0 8028	ECCTL1	Capture Control Register 1
0x01F0 602A	0x01F0 702A	0x01F0 802A	ECCTL2	Capture Control Register 2
0x01F0 602C	0x01F0 702C	0x01F0 802C	ECEINT	Capture Interrupt Enable Register
0x01F0 602E	0x01F0 702E	0x01F0 802E	ECFLG	Capture Interrupt Flag Register
0x01F0 6030	0x01F0 7030	0x01F0 8030	ECCLR	Capture Interrupt Clear Register
0x01F0 6032	0x01F0 7032	0x01F0 8032	ECFRC	Capture Interrupt Force Register
0x01F0 605C	0x01F0 705C	0x01F0 805C	REVID	Revision ID

Table 6-71 shows the eCAP timing requirement and Table 6-72 shows the eCAP switching characteristics.

Table 6-71. Enhanced Capture (eCAP) Timing Requirement

PARAMETER		TEST CONDITIONS	MIN	MAX	UNIT
$t_{w(CAP)}$	Capture input pulse width	Asynchronous	$2t_{c(SCO)}$		cycles
		Synchronous	$2t_{c(SCO)}$		cycles

Table 6-72. eCAP Switching Characteristics

PARAMETER		TEST CONDITIONS	MIN	MAX	UNIT
$t_{w(APWM)}$	Pulse duration, APWMx output high/low		20		ns

Copyright © 2008–2014, Texas Instruments Incorporated

6.19 Enhanced Quadrature Encoder (eQEP) Peripheral

The C6745/6747 device contains up to two enhanced quadrature encoder (eQEP) modules. See the *TMS320C6745/C6747 DSP Peripherals Overview Reference Guide.* (SPRUFK9) for more details.

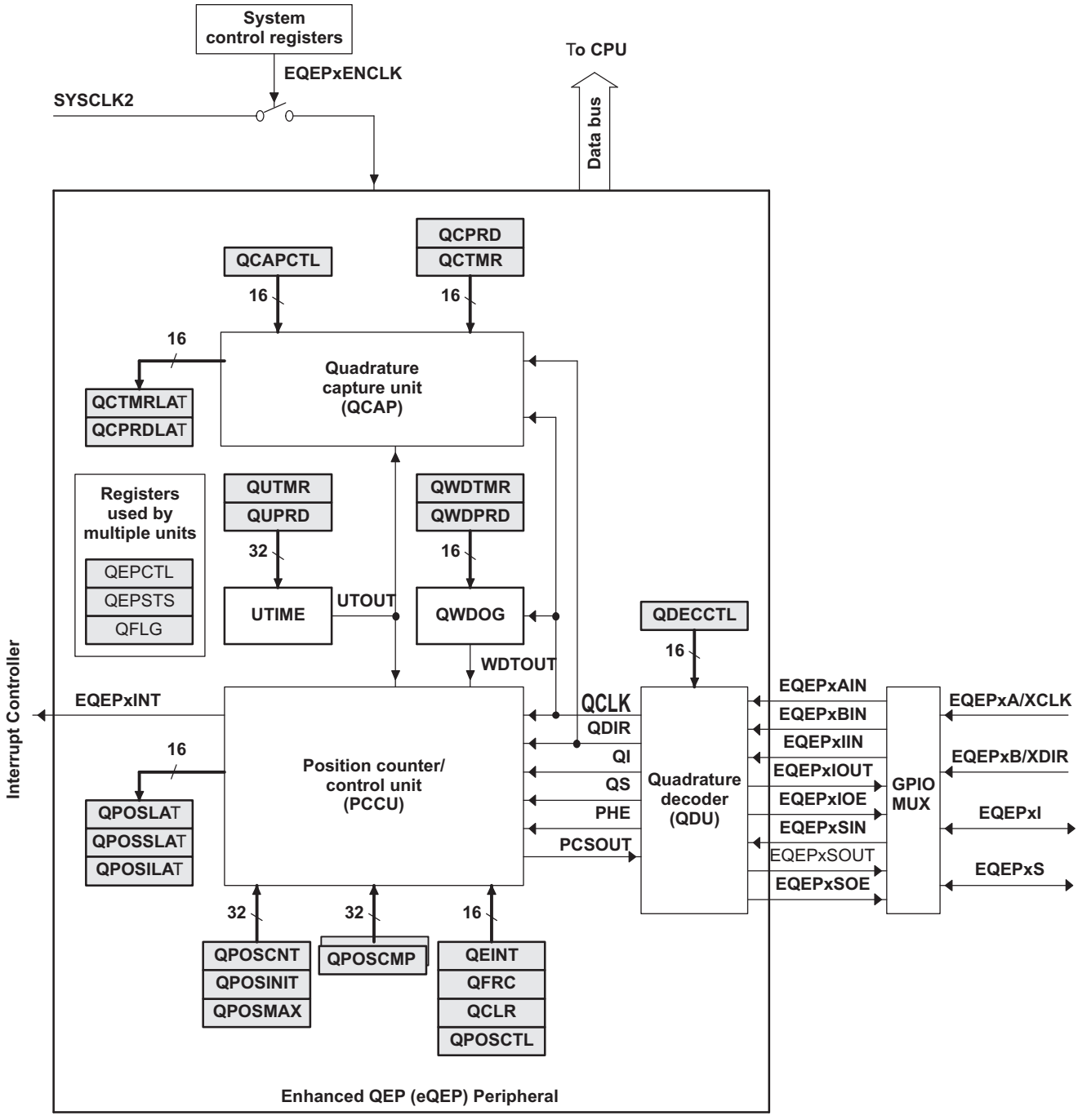

Figure 6-43. eQEP Functional Block Diagram

Table 6-73 is the list of the EQEP registers.

Table 6-74 shows the eQEP timing requirement and Table 6-75 shows the eQEP switching characteristics.

Copyright © 2008–2014, Texas Instruments Incorporated

Table 6-73. EQEP Registers

EQEP0 BYTE ADDRESS	EQEP1 BYTE ADDRESS	ACRONYM	REGISTER DESCRIPTION
0x01F0 9000	0x01F0 A000	QPOSCNT	eQEP Position Counter
0x01F0 9004	0x01F0 A004	QPOSINIT	eQEP Initialization Position Count
0x01F0 9008	0x01F0 A008	QPOSMAX	eQEP Maximum Position Count
0x01F0 900C	0x01F0 A00C	QPOSCMP	eQEP Position-compare
0x01F0 9010	0x01F0 A010	QPOSILAT	eQEP Index Position Latch
0x01F0 9014	0x01F0 A014	QPOSSLAT	eQEP Strobe Position Latch
0x01F0 9018	0x01F0 A018	QPOSLAT	eQEP Position Latch
0x01F0 901C	0x01F0 A01C	QUTMR	eQEP Unit Timer
0x01F0 9020	0x01F0 A020	QUPRD	eQEP Unit Period Register
0x01F0 9024	0x01F0 A024	QWDTMR	eQEP Watchdog Timer
0x01F0 9026	0x01F0 A026	QWDPRD	eQEP Watchdog Period Register
0x01F0 9028	0x01F0 A028	QDECCTL	eQEP Decoder Control Register
0x01F0 902A	0x01F0 A02A	QEPCTL	eQEP Control Register
0x01F0 902C	0x01F0 A02C	QCAPCTL	eQEP Capture Control Register
0x01F0 902E	0x01F0 A02E	QPOSCTL	eQEP Position-compare Control Register
0x01F0 9030	0x01F0 A030	QEINT	eQEP Interrupt Enable Register
0x01F0 9032	0x01F0 A032	QFLG	eQEP Interrupt Flag Register
0x01F0 9034	0x01F0 A034	QCLR	eQEP Interrupt Clear Register
0x01F0 9036	0x01F0 A036	QFRC	eQEP Interrupt Force Register
0x01F0 9038	0x01F0 A038	QEPSTS	eQEP Status Register
0x01F0 903A	0x01F0 A03A	QCTMR	eQEP Capture Timer
0x01F0 903C	0x01F0 A03C	QCPRD	eQEP Capture Period Register
0x01F0 903E	0x01F0 A03E	QCTMRLAT	eQEP Capture Timer Latch
0x01F0 9040	0x01F0 A040	QCPRDLAT	eQEP Capture Period Latch
0x01F0 905C	0x01F0 A05C	REVID	eQEP Revision ID

Table 6-74. Enhanced Quadrature Encoder Pulse (eQEP) Timing Requirements

PARAMETER		TEST CONDITIONS	MIN	MAX	UNIT
$t_{w(QEPP)}$	QEP input period	Asynchronous/synchronous	$2t_{c(SCO)}$		cycles
$t_{w(INDEXH)}$	QEP Index Input High time	Asynchronous/synchronous	$2t_{c(SCO)}$		cycles
$t_{w(INDEXL)}$	QEP Index Input Low time	Asynchronous/synchronous	$2t_{c(SCO)}$		cycles
$t_{w(STROBH)}$	QEP Strobe High time	Asynchronous/synchronous	$2t_{c(SCO)}$		cycles
$t_{w(STROBL)}$	QEP Strobe Input Low time	Asynchronous/synchronous	$2t_{c(SCO)}$		cycles

Table 6-75. eQEP Switching Characteristics

PARAMETER		MIN	MAX	UNIT
$t_{d(CNTR)xin}$	Delay time, external clock to counter increment		$4t_{c(SCO)}$	cycles
$t_{d(PCS-OUT)QEP}$	Delay time, QEP input edge to position compare sync output		$6t_{c(SCO)}$	cycles

Copyright © 2008–2014, Texas Instruments Incorporated

6.20 Enhanced High-Resolution Pulse-Width Modulator (eHRPWM)

The C6745/6747 device contains up to three enhanced PWM Modules (eHRPWM). Figure 6-44 shows a block diagram of multiple eHRPWM modules. Figure 4-4 shows the signal interconnections with the eHRPWM. See the *TMS320C6745/C6747 DSP Peripherals Overview Reference Guide.* (SPRUFK9) for more details.

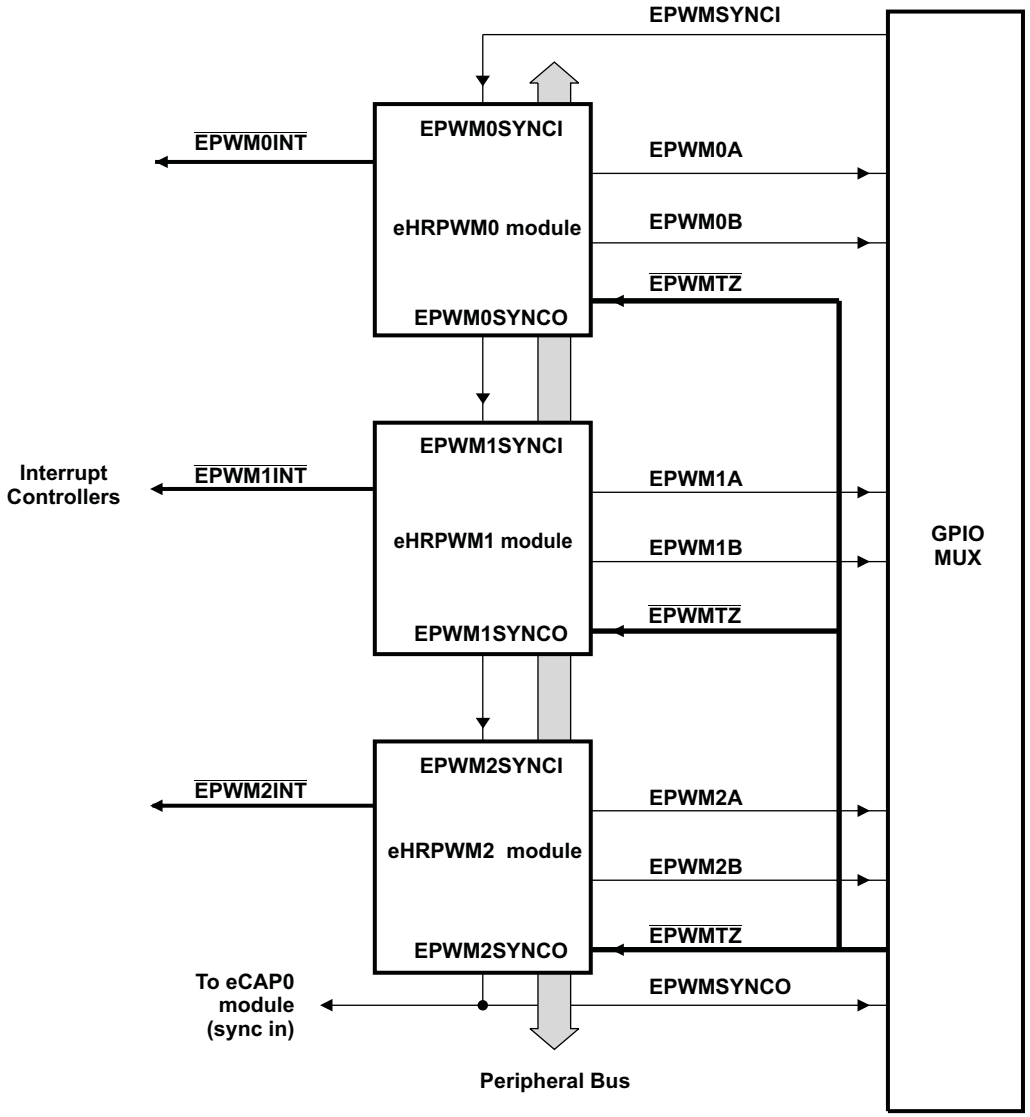

Figure 6-44. Multiple PWM Modules in a C6745/6747 System

Copyright © 2008–2014, Texas Instruments Incorporated

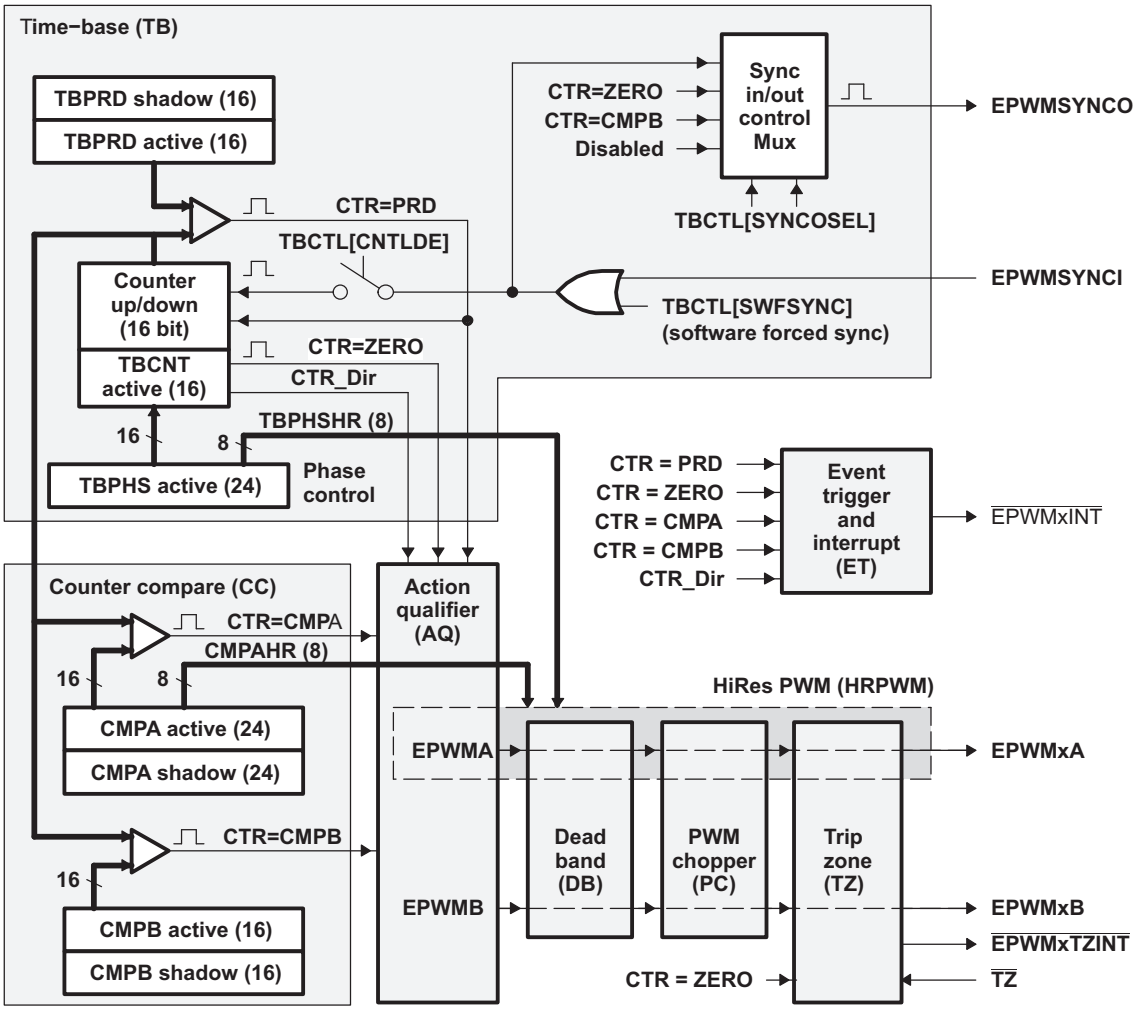

Figure 6-45. eHRPWM Sub-Modules Showing Critical Internal Signal Interconnections

Table 6-76. eHRPWM Module Control and Status Registers Grouped by Submodule

eHRPWM0 BYTE ADDRESS	eHRPWM1 BYTE ADDRESS	eHRPWM2 BYTE ADDRESS	ACRONYM	SIZE (×16)	SHADOW	REGISTER DESCRIPTION
			TIME-BASE SUBMODULE REGISTERS			
0x01F0 0000	0x01F0 2000	0x01F0 4000	TBCTL	1	No	Time-Base Control Register
0x01F0 0002	0x01F0 2002	0x01F0 4002	TBSTS	1	No	Time-Base Status Register
0x01F0 0004	0x01F0 2004	0x01F0 4004	TBPHSHR	1	No	Extension for HRPWM Phase Register (1)
0x01F0 0006	0x01F0 2006	0x01F0 4006	TBPHS	1	No	Time-Base Phase Register
0x01F0 0008	0x01F0 2008	0x01F0 4008	TBCNT	1	No	Time-Base Counter Register
0x01F0 000A	0x01F0 200A	0x01F0 400A	TBPRD	1	Yes	Time-Base Period Register
			COUNTER-COMPARE SUBMODULE REGISTERS			
0x01F0 000E	0x01F0 200E	0x01F0 400E	CMPCTL	1	No	Counter-Compare Control Register
0x01F0 0010	0x01F0 2010	0x01F0 4010	CMPAHR	1	No	Extension for HRPWM Counter-Compare A Register (1)
0x01F0 0012	0x01F0 2012	0x01F0 4012	CMPA	1	Yes	Counter-Compare A Register
0x01F0 0014	0x01F0 2014	0x01F0 4014	CMPB	1	Yes	Counter-Compare B Register
			ACTION-QUALIFIER SUBMODULE REGISTERS			
0x01F0 0016	0x01F0 2016	0x01F0 4016	AQCTLA	1	No	Action-Qualifier Control Register for Output A (eHRPWMxA)
0x01F0 0018	0x01F0 2018	0x01F0 4018	AQCTLB	1	No	Action-Qualifier Control Register for Output B (eHRPWMxB)
0x01F0 001A	0x01F0 201A	0x01F0 401A	AQSFRC	1	No	Action-Qualifier Software Force Register
0x01F0 001C	0x01F0 201C	0x01F0 401C	AQCSFRC	1	Yes	Action-Qualifier Continuous S/W Force Register Set
			DEAD-BAND GENERATOR SUBMODULE REGISTER			
0x01F0 001E	0x01F0 201E	0x01F0 401E	DBCTL	1	No	Dead-Band Generator Control Register
0x01F0 0020	0x01F0 2020	0x01F0 4020	DBRED	1	No	Dead-Band Generator Rising Edge Delay Count Register
0x01F0 0022	0x01F0 2022	0x01F0 4022	DBFED	1	No	Dead-Band Generator Falling Edge Delay Count Register
			PWM-CHOPPER SUBMODULE REGISTERS			
0x01F0 003C	0x01F0 203C	0x01F0 403C	PCCTL	1	No	PWM-Chopper Control Register
			TRIP-ZONE SUBMODULE REGISTERS			
0x01F0 0024	0x01F0 2024	0x01F0 4024	TZSEL	1	No	Trip-Zone Select Register
0x01F0 0028	0x01F0 2028	0x01F0 4028	TZCTL	1	No	Trip-Zone Control Register
0x01F0 002A	0x01F0 202A	0x01F0 402A	TZEINT	1	No	Trip-Zone Enable Interrupt Register
0x01F0 002C	0x01F0 202C	0x01F0 402C	TZFLG	1	No	Trip-Zone Flag Register
0x01F0 002E	0x01F0 202E	0x01F0 402E	TZCLR	1	No	Trip-Zone Clear Register
0x01F0 0030	0x01F0 2030	0x01F0 4030	TZFRC	1	No	Trip-Zone Force Register
			EVENT-TRIGGER SUBMODULE REGISTERS			
0x01F0 0032	0x01F0 2032	0x01F0 4032	ETSEL	1	No	Event-Trigger Selection Register
0x01F0 0034	0x01F0 2034	0x01F0 4034	ETPS	1	No	Event-Trigger Pre-Scale Register
0x01F0 0036	0x01F0 2036	0x01F0 4036	ETFLG	1	No	Event-Trigger Flag Register
0x01F0 0038	0x01F0 2038	0x01F0 4038	ETCLR	1	No	Event-Trigger Clear Register
0x01F0 003A	0x01F0 203A	0x01F0 403A	ETFRC	1	No	Event-Trigger Force Register
			HIGH-RESOLUTION PWM (HRPWM) SUBMODULE REGISTERS			
0x01F0 1040	0x01F0 3040	0x01F0 5040	HRCNFG	1	No	HRPWM Configuration Register (1)

(1) These registers are only available on eHRPWM instances that include the high-resolution PWM (HRPWM) extension; otherwise, these locations are reserved.

Copyright © 2008–2014, Texas Instruments Incorporated

6.20.1 Enhanced Pulse Width Modulator (eHRPWM) Timing

PWM refers to PWM outputs on eHRPWM1-6. Table 6-77 shows the PWM timing requirements and Table 6-78, switching characteristics.

Table 6-77. eHRPWM Timing Requirements

PARAMETER		TEST CONDITIONS	MIN	MAX	UNIT
$t_{w(SYNCIN)}$	Sync input pulse width	Asynchronous	$2t_{c(SCO)}$		cycles
		Synchronous	$2t_{c(SCO)}$		cycles

Table 6-78. eHRPWM Switching Characteristics

PARAMETER		TEST CONDITIONS	MIN	MAX	UNIT
$t_{w(PWM)}$	Pulse duration, PWMx output high/low		20		ns
$t_{w(SYNCOUT)}$	Sync output pulse width		$8t_{c(SCO)}$		cycles
$t_{d(PWM)TZA}$	Delay time, trip input active to PWM forced high Delay time, trip input active to PWM forced low	no pin load; no additional programmable delay		25	ns
$t_{d(TZ-PWM)HZ}$	Delay time, trip input active to PWM Hi-Z	no additional programmable delay		20	ns

6.20.2 Trip-Zone Input Timing

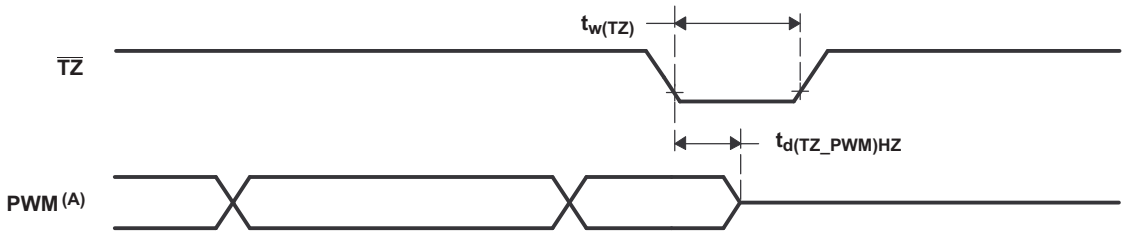

A. PWM refers to all the PWM pins in the device. The state of the PWM pins after $\overline{TZ}$ is taken high depends on the PWM recovery software.

Figure 6-46. PWM Hi-Z Characteristics

Table 6-79. Trip-Zone input Timing Requirements

PARAMETER			MIN	MAX	UNIT
$t_{w(TZ)}$	Pulse duration, $\overline{TZx}$ input low	Asynchronous	$1t_{c(SCO)}$		cycles
		Synchronous	$2t_{c(SCO)}$		cycles

Table 6-80 shows the high-resolution PWM switching characteristics.

Table 6-80. High Resolution PWM Characteristics at SYSCLKOUT = (60 - 100 MHz)

PARAMETER	MIN	TYP	MAX	UNIT
Micro Edge Positioning (MEP) step size (1)		200		ps

(1) MEP step size will increase with low voltage and high temperature and decrease with high voltage and cold temperature.

Copyright © 2008–2014, Texas Instruments Incorporated

6.21 LCD Controller

The LCD controller consists of two independent controllers, the Raster Controller and the LCD Interface Display Driver (LIDD) controller. Each controller operates independently from the other and only one of them is active at any given time.

- The Raster Controller handles the synchronous LCD interface. It provides timing and data for constant graphics refresh to a passive display. It supports a wide variety of monochrome and full-color display types and sizes by use of programmable timing controls, a built-in palette, and a gray-scale/serializer. Graphics data is processed and stored in frame buffers. A frame buffer is a contiguous memory block in the system. A built-in DMA engine supplies the graphics data to the Raster engine which, in turn, outputs to the external LCD device.
- The LIDD Controller supports the asynchronous LCD interface. It provides full-timing programmability of control signals (CS, WE, OE, ALE) and output data.

The maximum resolution for the LCD controller is 1024 x 1024 pixels. The maximum frame rate is determined by the image size in combination with the pixel clock rate. *OMAP-L1x/C674x/AM1x SOC Architecture and Throughput Overview* (SPRAB93).

Table 6-81 lists the LCD Controller registers

Table 6-81. LCD Controller (LCDC) Registers

BYTE ADDRESS	ACRONYM	REGISTER DESCRIPTION
0x01E1 3000	REVID	LCD Revision Identification Register
0x01E1 3004	LCD_CTRL	LCD Control Register
0x01E1 3008	LCD_STAT	LCD Status Register
0x01E1 300C	LIDD_CTRL	LCD LIDD Control Register
0x01E1 3010	LIDD_CS0_CONF	LCD LIDD CS0 Configuration Register
0x01E1 3014	LIDD_CS0_ADDR	LCD LIDD CS0 Address Read/Write Register
0x01E1 3018	LIDD_CS0_DATA	LCD LIDD CS0 Data Read/Write Register
0x01E1 301C	LIDD_CS1_CONF	LCD LIDD CS1 Configuration Register
0x01E1 3020	LIDD_CS1_ADDR	LCD LIDD CS1 Address Read/Write Register
0x01E1 3024	LIDD_CS1_DATA	LCD LIDD CS1 Data Read/Write Register
0x01E1 3028	RASTER_CTRL	LCD Raster Control Register
0x01E1 302C	RASTER_TIMING_0	LCD Raster Timing 0 Register
0x01E1 3030	RASTER_TIMING_1	LCD Raster Timing 1 Register
0x01E1 3034	RASTER_TIMING_2	LCD Raster Timing 2 Register
0x01E1 3038	RASTER_SUBPANEL	LCD Raster Subpanel Display Register
0x01E1 3040	LCDDMA_CTRL	LCD DMA Control Register
0x01E1 3044	LCDDMA_FB0_BASE	LCD DMA Frame Buffer 0 Base Address Register
0x01E1 3048	LCDDMA_FB0_CEILING	LCD DMA Frame Buffer 0 Ceiling Address Register
0x01E1 304C	LCDDMA_FB1_BASE	LCD DMA Frame Buffer 1 Base Address Register
0x01E1 3050	LCDDMA_FB1_CEILING	LCD DMA Frame Buffer 1 Ceiling Address Register

Copyright © 2008–2014, Texas Instruments Incorporated

6.21.1 LCD Interface Display Driver (LIDD Mode)

Table 6-82. LCD LIDD Mode Timing Requirements

No.	PARAMETER		MIN	MAX	UNIT
16	$t_{su(LCD_D)}$	Setup time, LCD_D[15:0] valid before LCD_MCLK high	7		ns
17	$t_{h(LCD_D)}$	Hold time, LCD_D[15:0] valid after LCD_MCLK high	0.5		ns

Table 6-83. LCD LIDD Mode Timing Characteristics

No.	PARAMETER		MIN	MAX	UNIT
4	$t_{d(LCD_D_V)}$	Delay time, LCD_MCLK high to LCD_D[15:0] valid (write)	-0.5	10	ns
5	$t_{d(LCD_D_I)}$	Delay time, LCD_MCLK high to LCD_D[15:0] invalid (write)	-0.5	10	ns
6	$t_{d(LCD_E_A)}$	Delay time, LCD_MCLK high to $\overline{\text{LCD_AC_ENB_CS}}$ low	-0.5	7	ns
7	$t_{d(LCD_E_I)}$	Delay time, LCD_MCLK high to $\overline{\text{LCD_AC_ENB_CS}}$ high	-0.5	7	ns
8	$t_{d(LCD_A_A)}$	Delay time, LCD_MCLK high to LCD_VSYNC low	-0.5	8	ns
9	$t_{d(LCD_A_I)}$	Delay time, LCD_MCLK high to LCD_VSYNC high	-0.5	8	ns
10	$t_{d(LCD_W_A)}$	Delay time, LCD_MCLK high to LCD_HSYNC low	-0.5	8	ns
11	$t_{d(LCD_W_I)}$	Delay time, LCD_MCLK high to LCD_HSYNC high	-0.5	8	ns
12	$t_{d(LCD_STRB_A)}$	Delay time, LCD_MCLK high to LCD_PCLK active	-0.5	12	ns
13	$t_{d(LCD_STRB_I)}$	Delay time, LCD_MCLK high to LCD_PCLK inactive	-0.5	12	ns
14	$t_{d(LCD_D_Z)}$	Delay time, LCD_MCLK high to LCD_D[15:0] in 3-state	-0.5	12	ns
15	$t_{d(Z_LCD_D)}$	Delay time, LCD_MCLK high to LCD_D[15:0] (valid from 3-state)	-0.5	12	ns

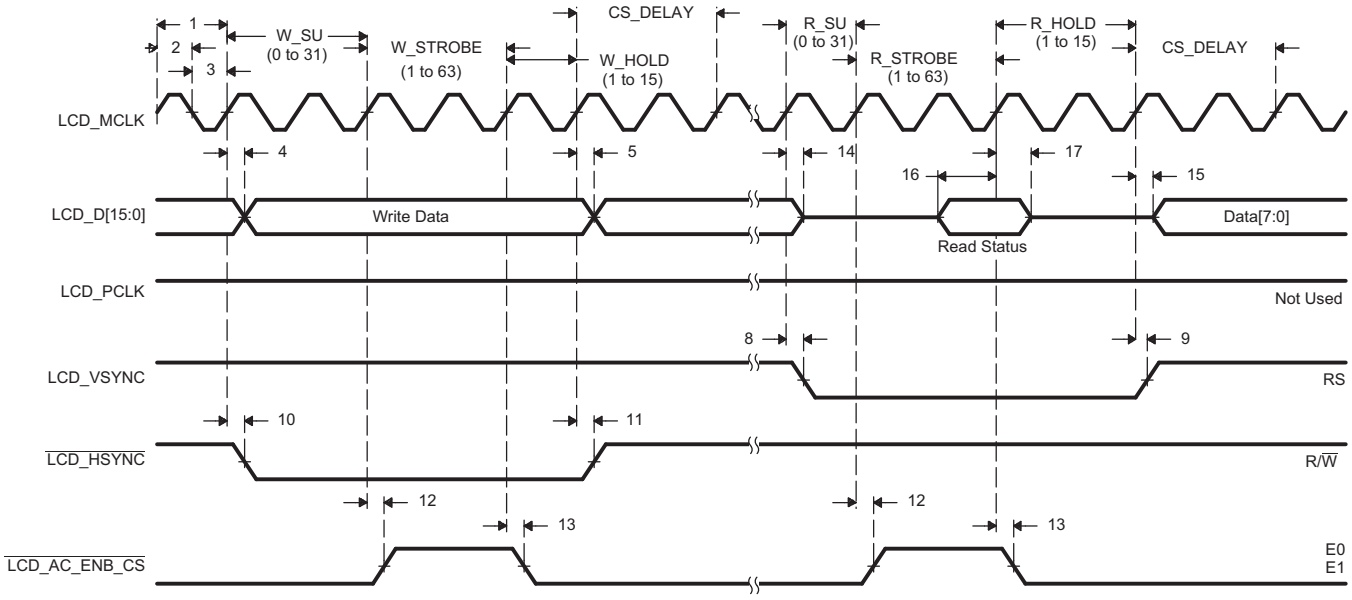

Figure 6-47. Character Display HD44780 Write

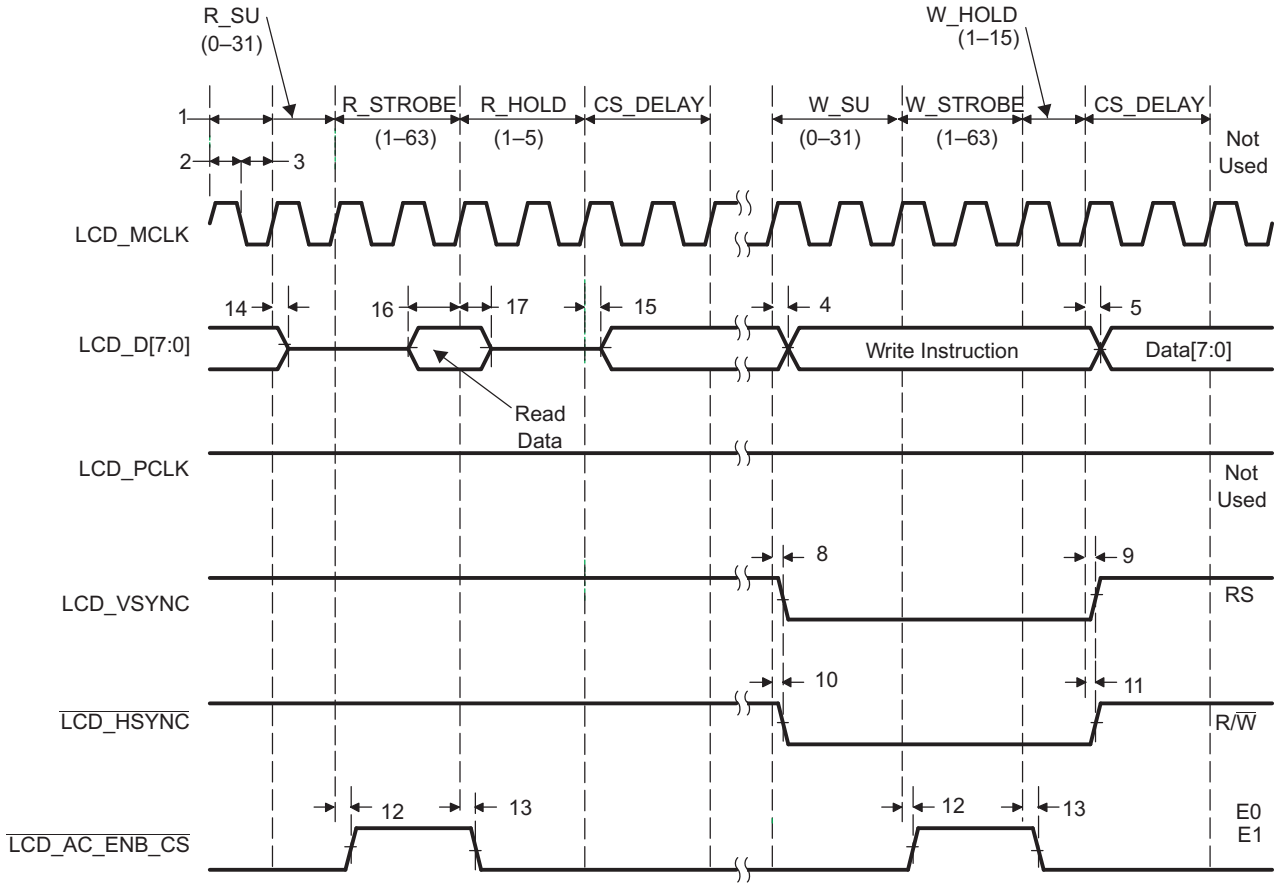

Figure 6-48. Character Display HD44780 Read

Copyright © 2008–2014, Texas Instruments Incorporated

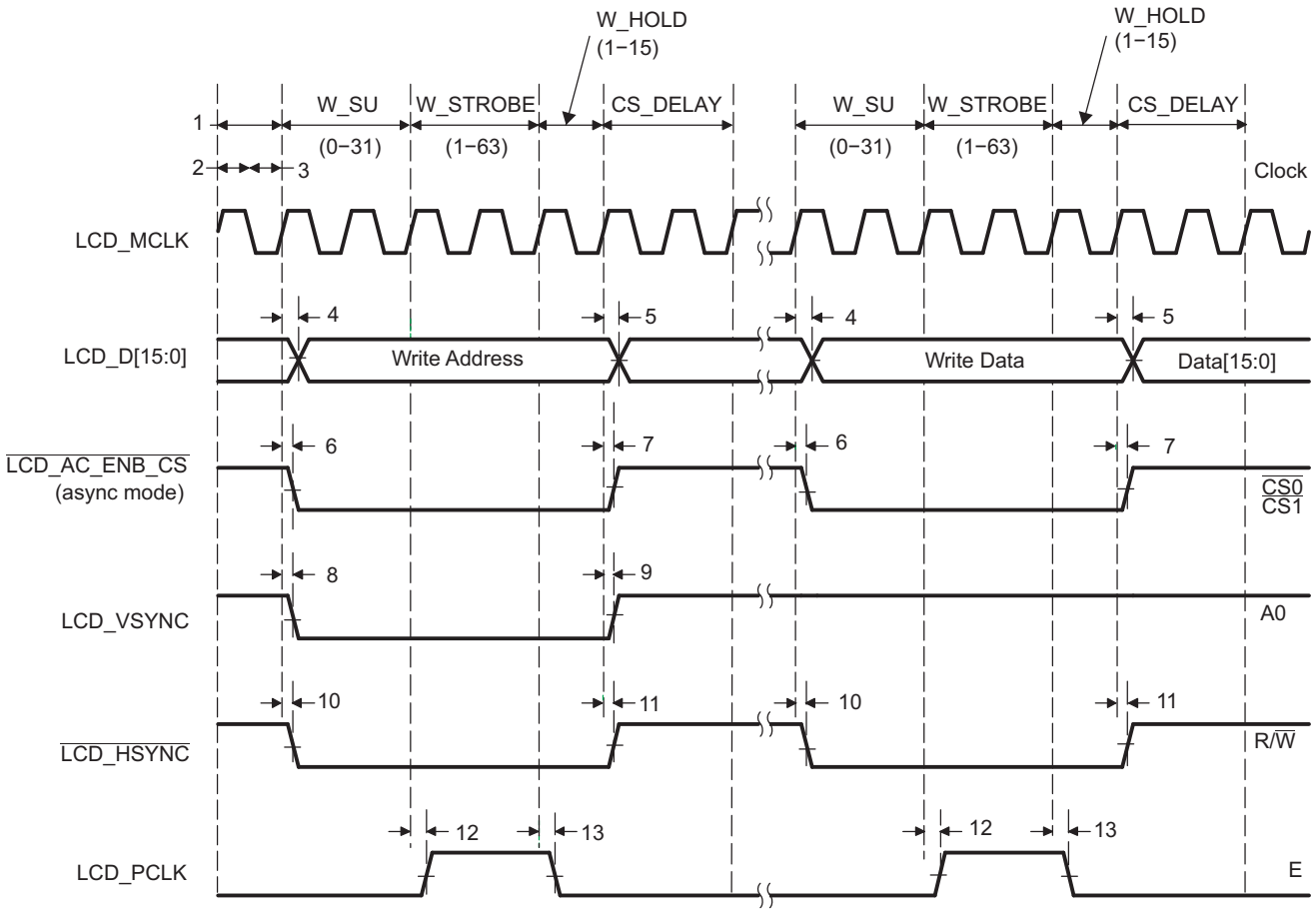

Figure 6-49. Micro-Interface Graphic Display 6800 Write

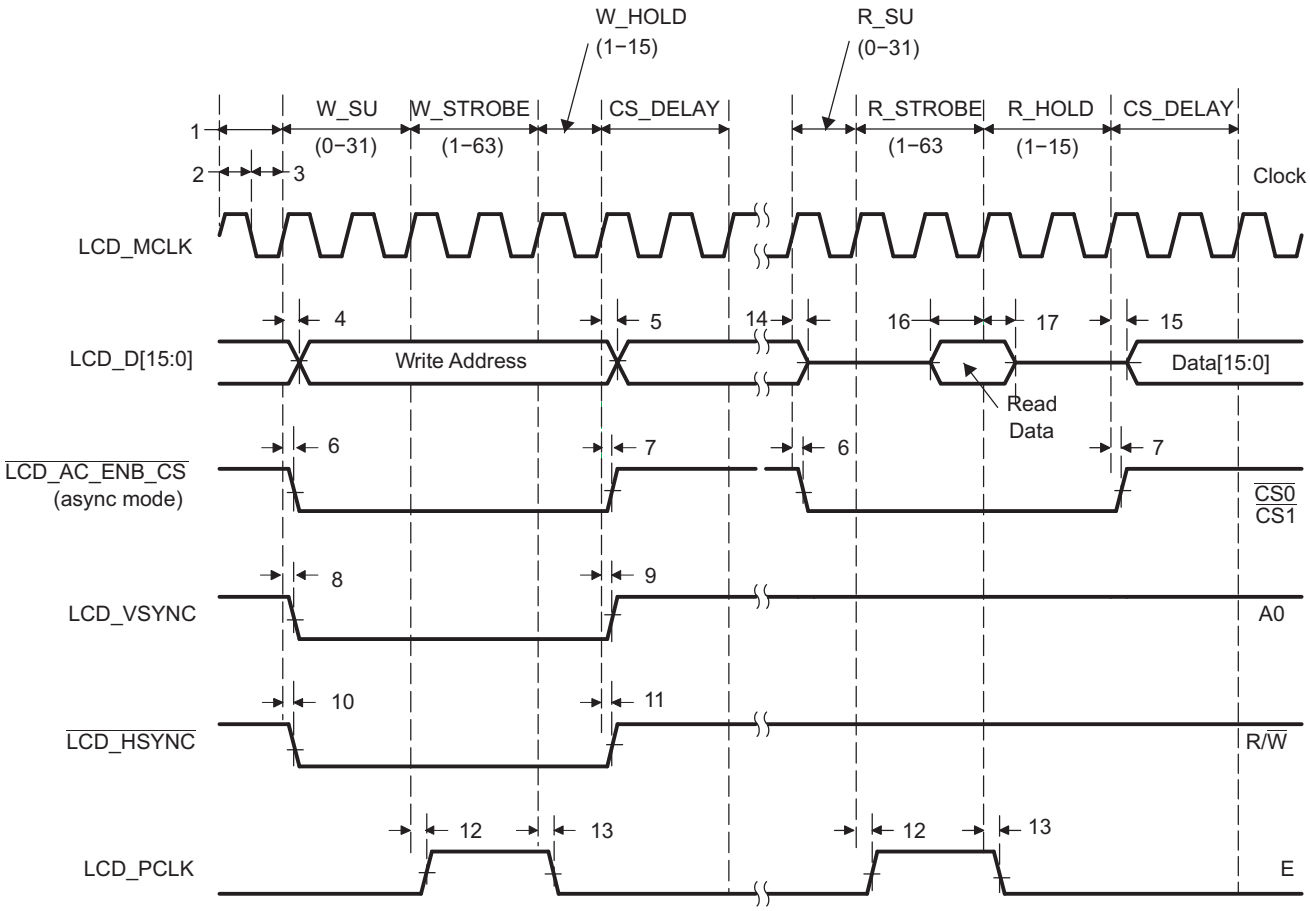

Figure 6-50. Micro-Interface Graphic Display 6800 Read

Copyright © 2008–2014, Texas Instruments Incorporated

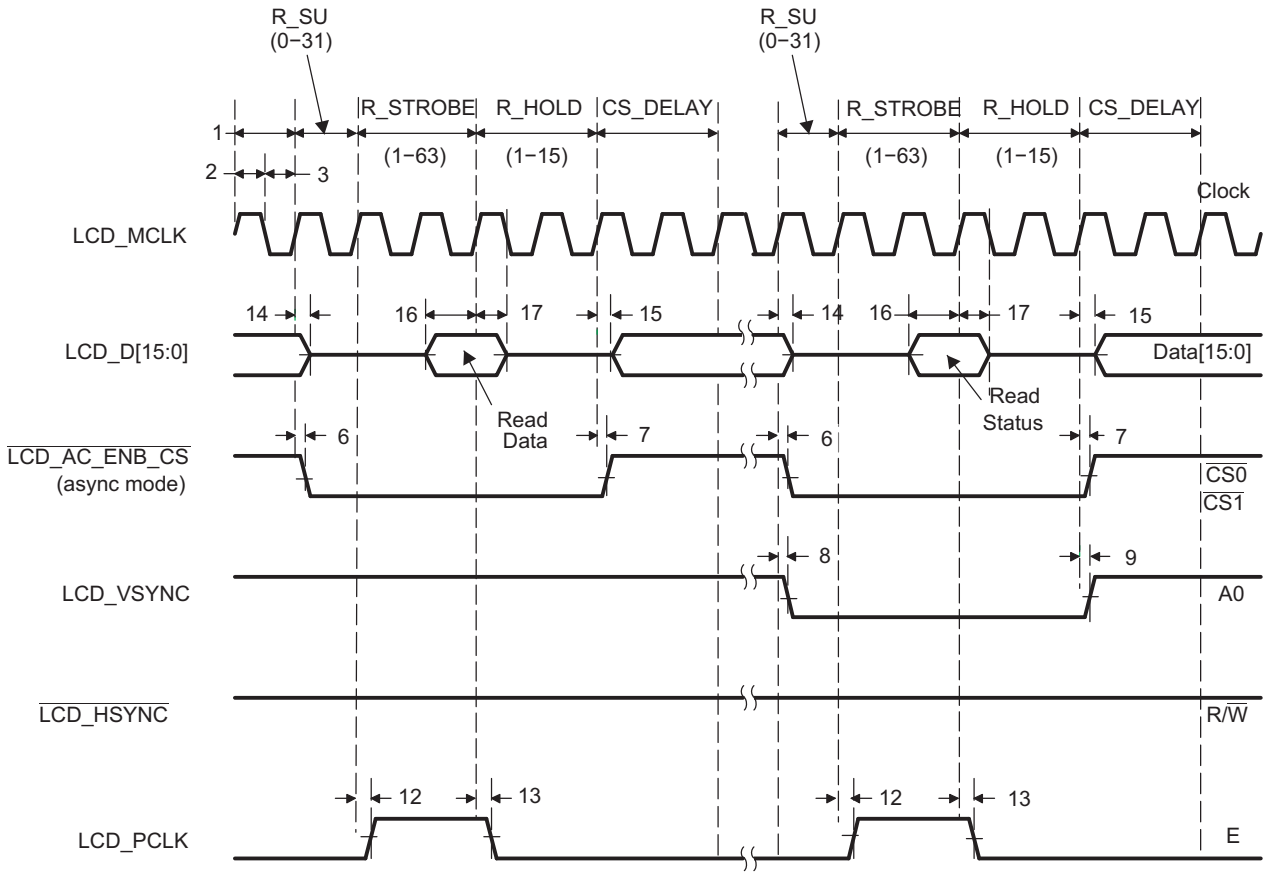

Figure 6-51. Micro-Interface Graphic Display 6800 Status

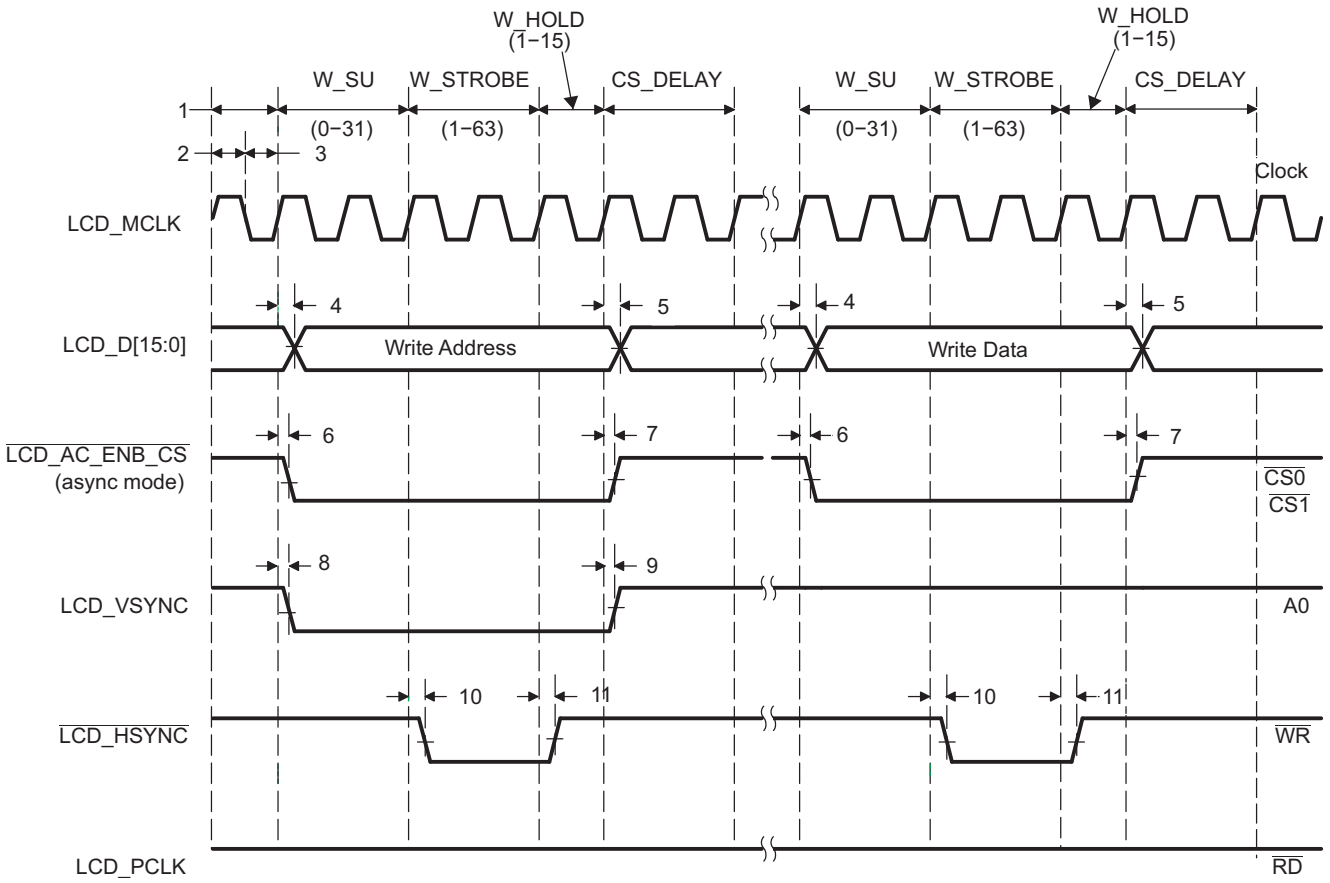

Figure 6-52. Micro-Interface Graphic Display 8080 Write

Copyright © 2008–2014, Texas Instruments Incorporated

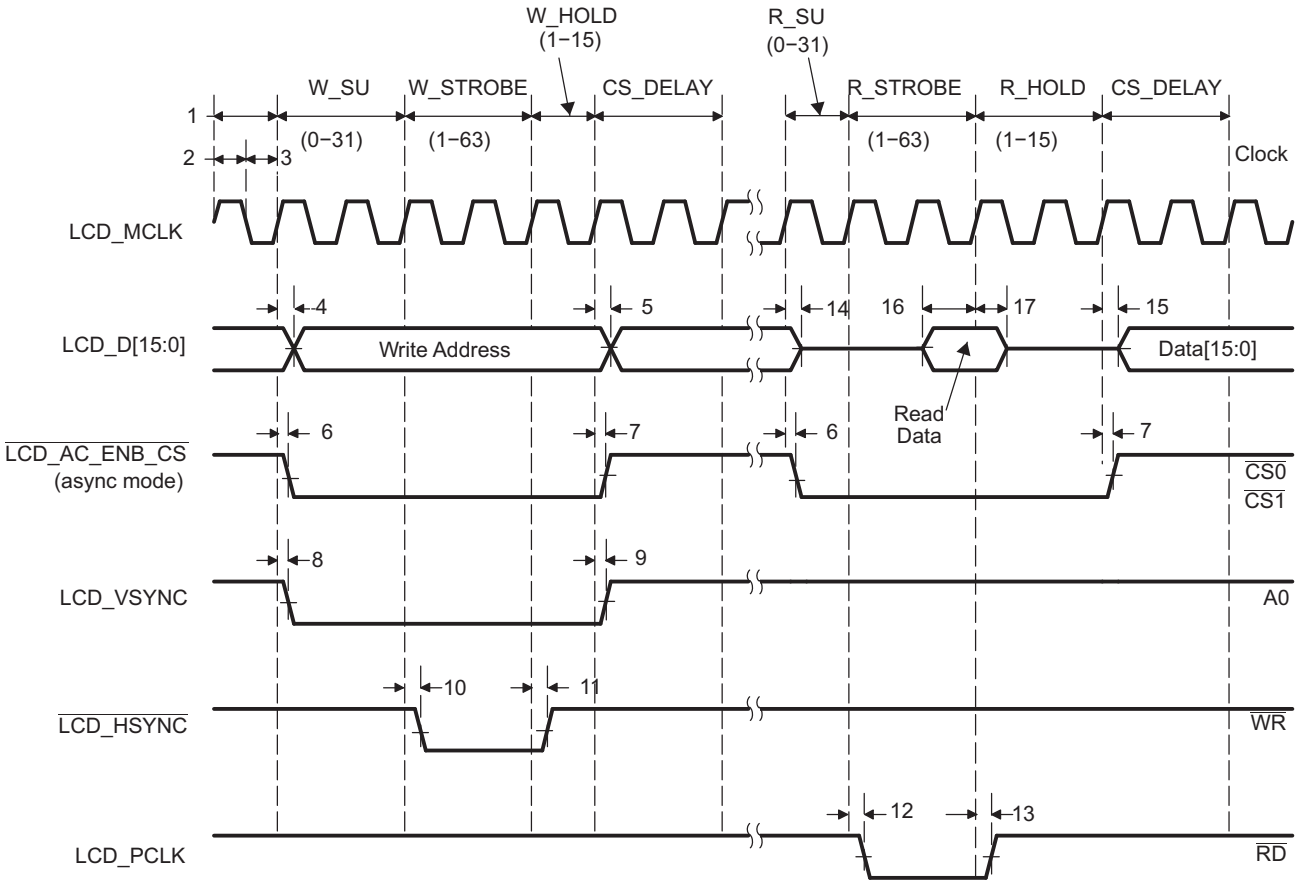

Figure 6-53. Micro-Interface Graphic Display 8080 Read

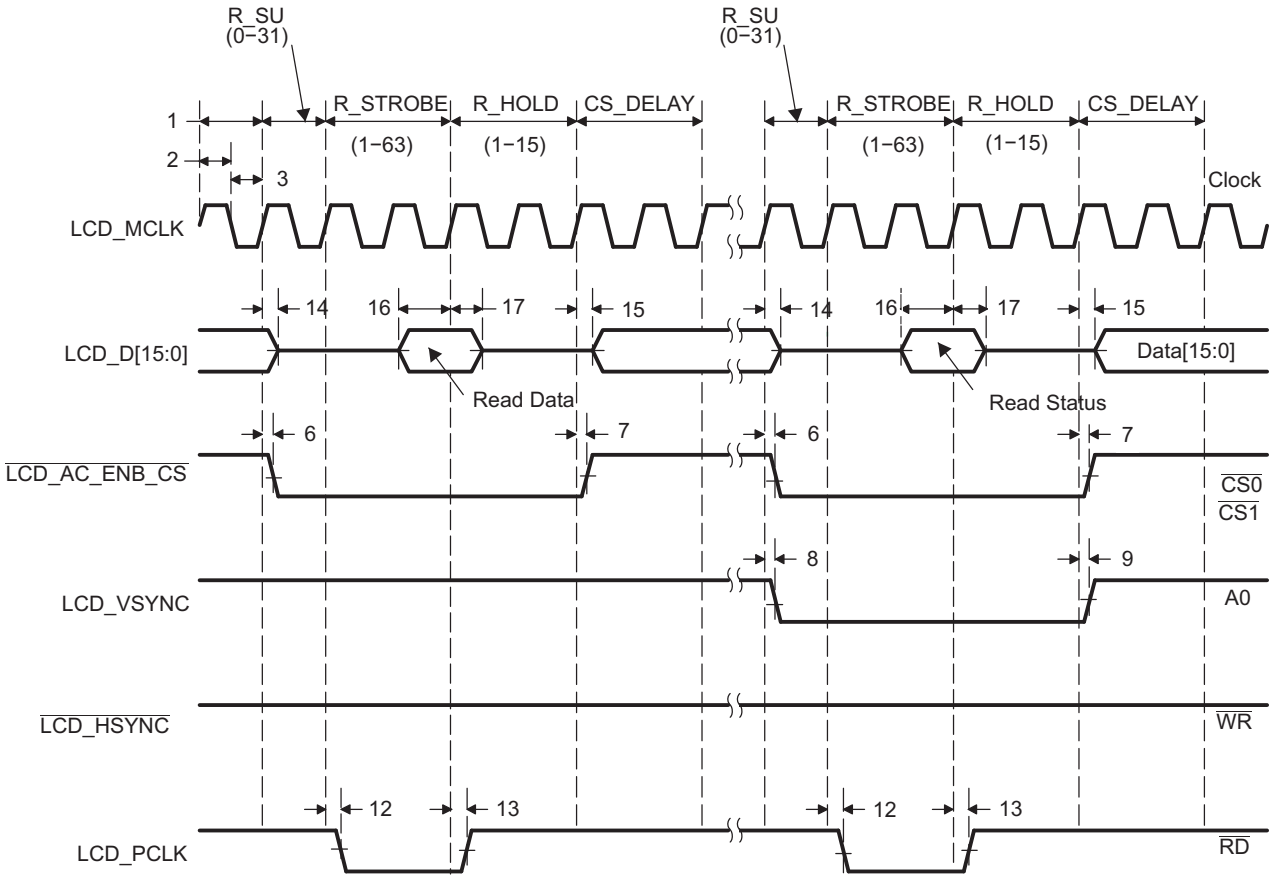

Figure 6-54. Micro-Interface Graphic Display 8080 Status

Copyright © 2008–2014, Texas Instruments Incorporated

6.21.2 LCD Raster Mode

Table 6-84. LCD Raster Mode Timing

See Figure 6-55 through Figure 6-59

No.	PARAMETER		MIN	MAX	UNIT
1	$t_{c(PIXEL_CLK)}$	Cycle time, pixel clock	26.6		ns
2	$t_{w(PIXEL_CLK_H)}$	Pulse duration, pixel clock high	10		ns
3	$t_{w(PIXEL_CLK_L)}$	Pulse duration, pixel clock low	10		ns
4	$t_{d(LCD_D_V)}$	Delay time, LCD_PCLK high to LCD_D[15:0] valid (write)	-0.5	9	ns
5	$t_{d(LCD_D_IV)}$	Delay time, LCD_PCLK high to LCD_D[15:0] invalid (write)	-0.5	9	ns
6	$t_{d(\overline{LCD_AC_ENB_CS_A})}$	Delay time, LCD_PCLK low to $\overline{LCD_AC_ENB_CS}$ high	S2 - 0.5(1)	S2 + 9(1)	ns
7	$t_{d(\overline{LCD_AC_ENB_CS_I})}$	Delay time, LCD_PCLK low to $\overline{LCD_AC_ENB_CS}$ low	S2 - 0.5(1)	S2 + 9(1)	ns
8	$t_{d(LCD_VSYNC_A)}$	Delay time, LCD_PCLK low to LCD_VSYNC high(2)	-0.5	12	ns
9	$t_{d(LCD_VSYNC_I)}$	Delay time, LCD_PCLK low to LCD_VSYNC low(2)	-0.5	12	ns
10	$t_{d(LCD_HSYNC_A)}$	Delay time, LCD_PCLK high to LCD_HSYNC high(2)	-0.5	12	ns
11	$t_{d(LCD_HSYNC_I)}$	Delay time, LCD_PCLK high to LCD_HSYNC low(2)	-0.5	12	ns

(1) S2 = SYSCLK2 cycle time in ns
(2) The activation edge of the control signals LCD_VSYNC and LCD_HSYNC may be programmed to either the rising or falling edge of the pixel clock through the LCD (RASTER_TIMING_2) register. In Figure 6-56 through Figure 6-59, all signal polarity and activation edges are based on the default LCD (RASTER_TIMING_2) register settings.

Frame-to-frame timing is derived through the following parameters in the LCD (RASTER_TIMING_1) register:

- Vertical front porch (VFP)
- Vertical sync pulse width (VSW)
- Vertical back porch (VBP)
- Lines per panel (LPP)

Line-to-line timing is derived through the following parameters in the LCD (RASTER_TIMING_0) register:

- Horizontal front porch (HFP)
- Horizontal sync pulse width (HSW)
- Horizontal back porch (HBP)
- Pixels per panel (PPL)

$\overline{LCD_AC_ENB_CS}$ timing is derived through the following parameter in the LCD (RASTER_TIMING_2) register:

- AC bias frequency (ACB)

The display format produced in raster mode is shown in Figure 6-55. An entire frame is delivered one line at a time. The first line delivered starts at data pixel (1, 1) and ends at data pixel (P, 1). The last line delivered starts at data pixel (1, L) and ends at data pixel (P, L). The beginning of each new frame is denoted by the activation of I/O signal LCD_VSYNC. The beginning of each new line is denoted by the activation of I/O signal LCD_HSYNC.

Copyright © 2008–2014, Texas Instruments Incorporated

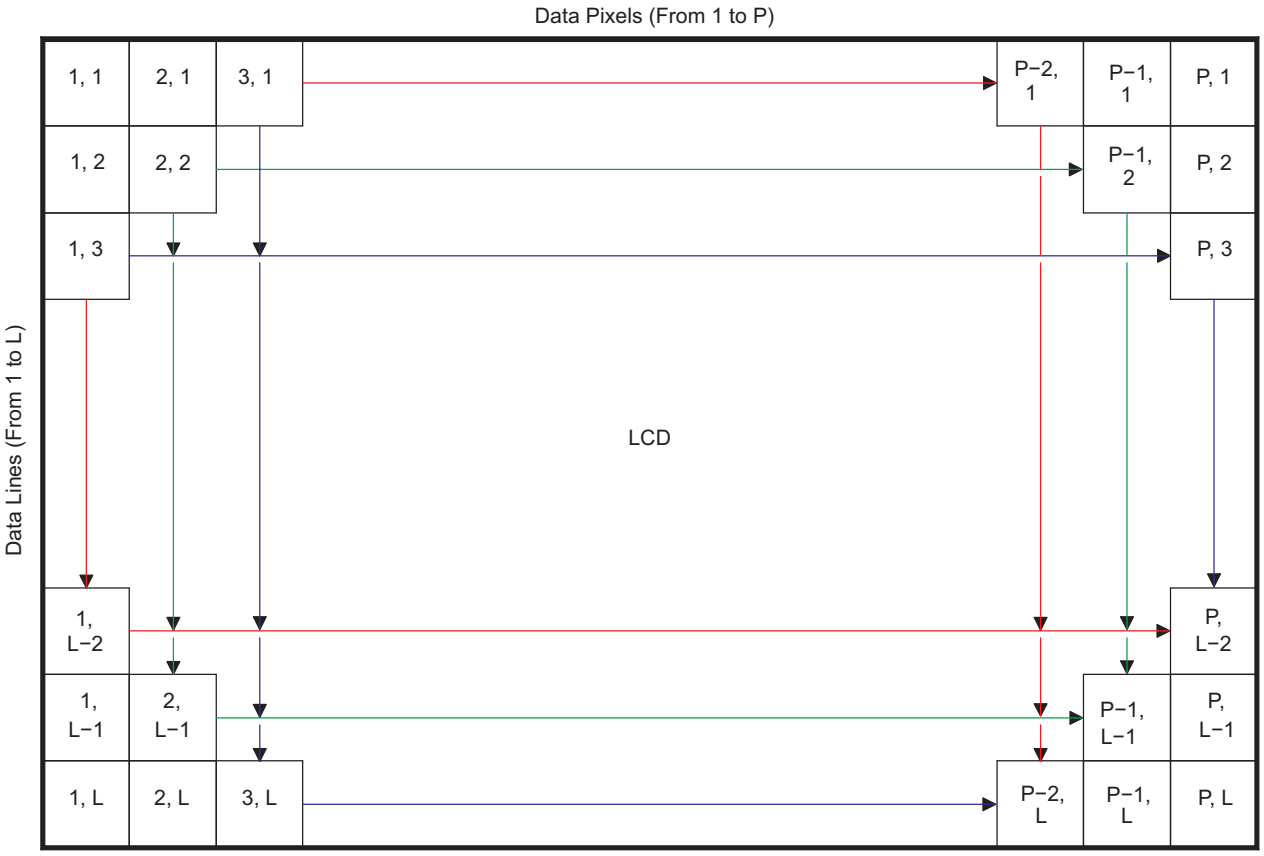

Figure 6-55. LCD Raster-Mode Display Format

Copyright © 2008–2014, Texas Instruments Incorporated

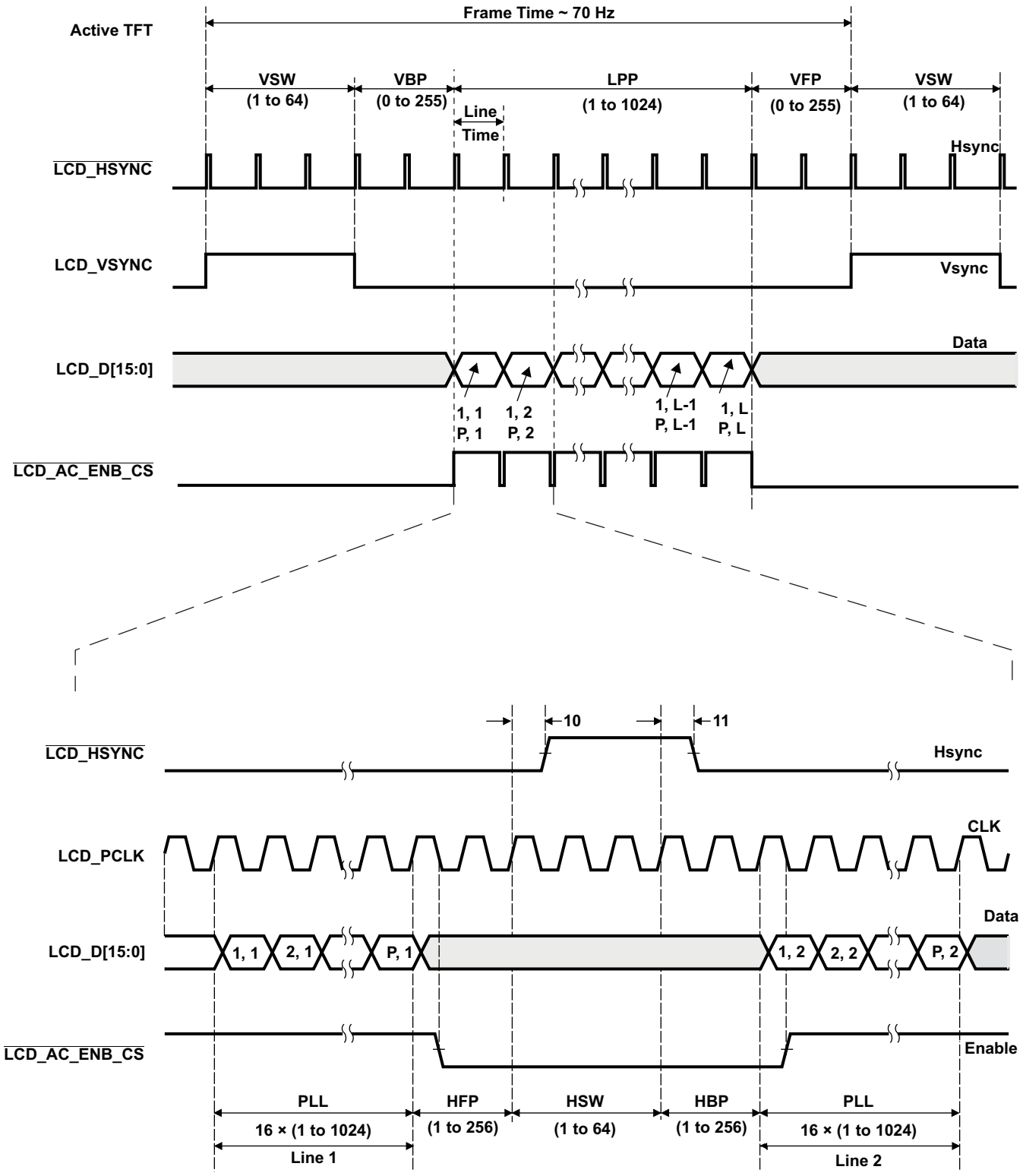

Figure 6-56. LCD Raster-Mode Active

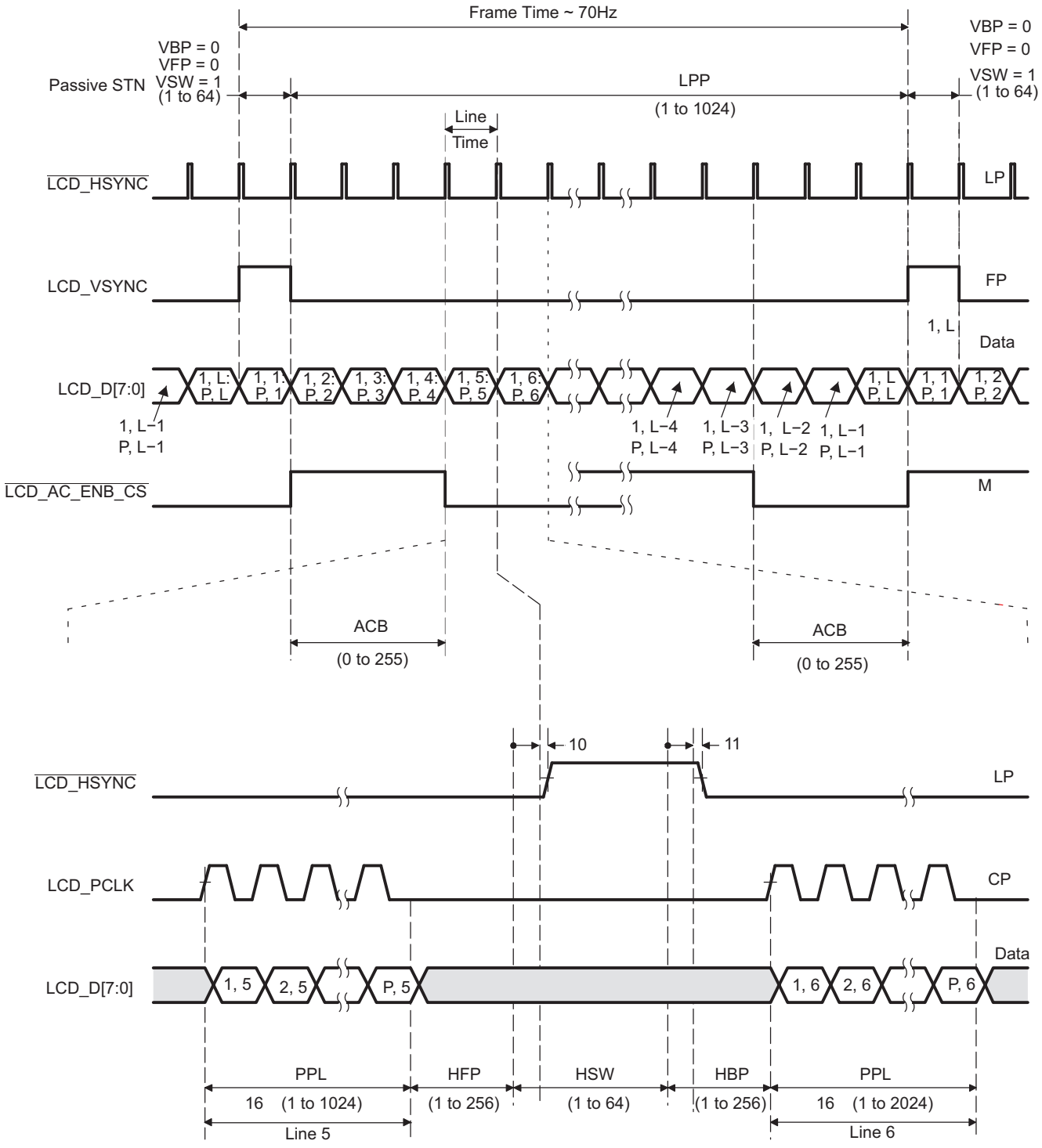

Figure 6-57. LCD Raster-Mode Passive

Copyright © 2008–2014, Texas Instruments Incorporated

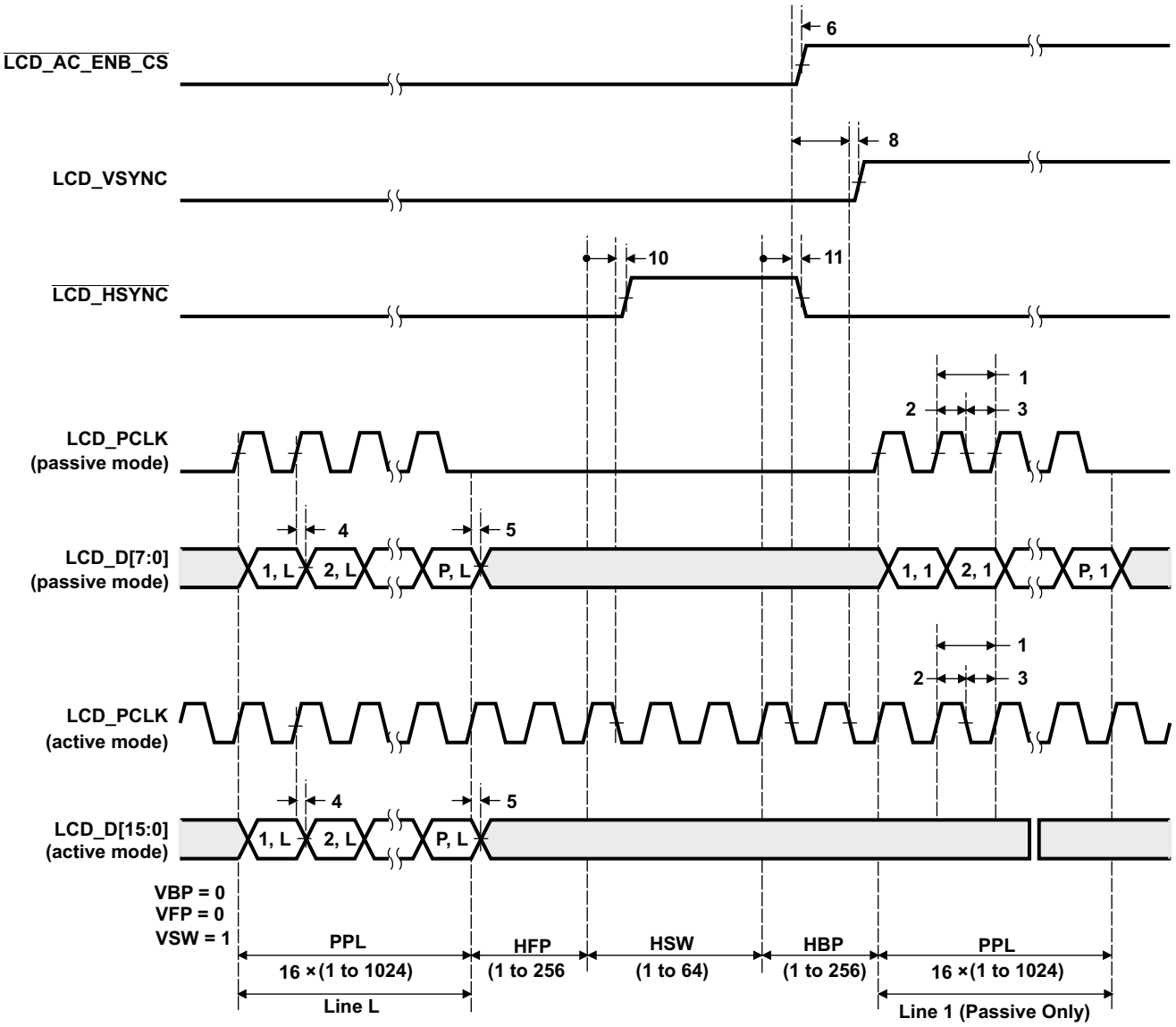

Figure 6-58. LCD Raster-Mode Control Signal Activation

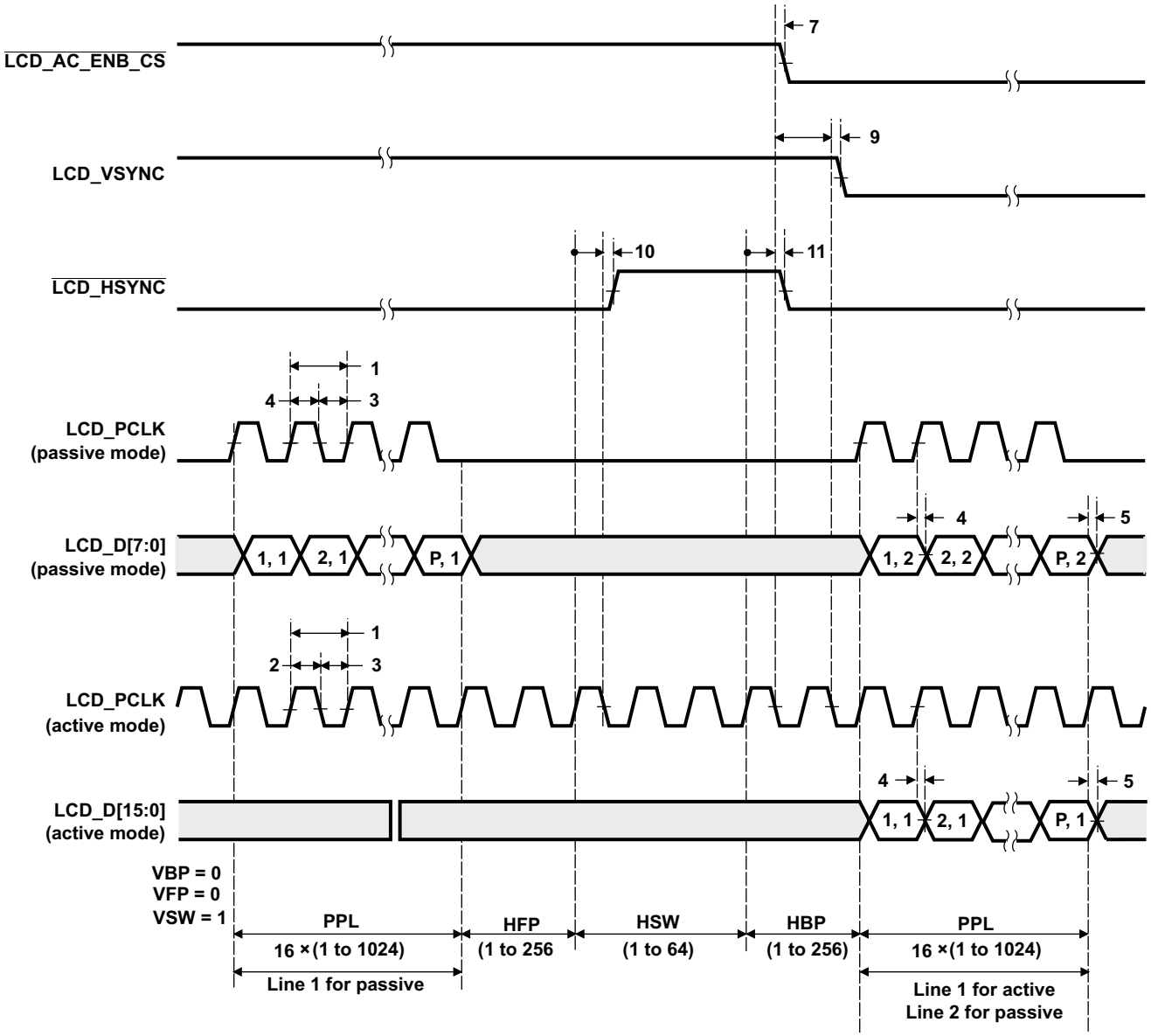

Figure 6-59. LCD Raster-Mode Control Signal Deactivation

Copyright © 2008–2014, Texas Instruments Incorporated

6.22 Timers

The timers support the following features:

- Configurable as single 64-bit timer or two 32-bit timers
- Period timeouts generate interrupts, DMA events or external pin events
- 8 32-bit compare registers
- Compare matches generate interrupt events
- Capture capability
- 64-bit Watchdog capability (Timer64P1 only)

Table 6-85 lists the timer registers.

Table 6-85. Timer Registers

Timer64P 0	Timer64P 1	ACRONYM	REGISTER DESCRIPTION
0x01C2 0000	0x01C2 1000	REV	Revision Register
0x01C2 0004	0x01C2 1004	EMUMGT	Emulation Management Register
0x01C2 0008	0x01C2 1008	GPINTGPEN	GPIO Interrupt and GPIO Enable Register
0x01C2 000C	0x01C2 100C	GPDATGPDIR	GPIO Data and GPIO Direction Register
0x01C2 0010	0x01C2 1010	TIM12	Timer Counter Register 12
0x01C2 0014	0x01C2 1014	TIM34	Timer Counter Register 34
0x01C2 0018	0x01C2 1018	PRD12	Timer Period Register 12
0x01C2 001C	0x01C2 101C	PRD34	Timer Period Register 34
0x01C2 0020	0x01C2 1020	TCR	Timer Control Register
0x01C2 0024	0x01C2 1024	TGCR	Timer Global Control Register
0x01C2 0028	0x01C2 1028	WDTCR	Watchdog Timer Control Register
0x01C2 0034	0x01C2 1034	REL12	Timer Reload Register 12
0x01C2 0038	0x01C2 1038	REL34	Timer Reload Register 34
0x01C2 003C	0x01C2 103C	CAP12	Timer Capture Register 12
0x01C2 0040	0x01C2 1040	CAP34	Timer Capture Register 34
0x01C2 0044	0x01C2 1044	INTCTLSTAT	Timer Interrupt Control and Status Register
0x01C2 0060	0x01C2 1060	CMP0	Compare Register 0
0x01C2 0064	0x01C2 1064	CMP1	Compare Register 1
0x01C2 0068	0x01C2 1068	CMP2	Compare Register 2
0x01C2 006C	0x01C2 106C	CMP3	Compare Register 3
0x01C2 0070	0x01C2 1070	CMP4	Compare Register 4
0x01C2 0074	0x01C2 1074	CMP5	Compare Register 5
0x01C2 0078	0x01C2 1078	CMP6	Compare Register 6
0x01C2 007C	0x01C2 107C	CMP7	Compare Register 7

Copyright © 2008–2014, Texas Instruments Incorporated

6.22.1 Timer Electrical Data/Timing

Table 6-86. Timing Requirements for Timer Input(1) (2) (see Figure 6-60)

No.	PARAMETER		MIN	MAX	UNIT
1	$t_{c(TM64Px_IN12)}$	Cycle time, TM64Px_IN12	4P		ns
2	$t_{w(TINPH)}$	Pulse duration, TM64Px_IN12 high	0.45C	0.55C	ns
3	$t_{w(TINPL)}$	Pulse duration, TM64Px_IN12 low	0.45C	0.55C	ns
4	$t_{t(TM64Px_IN12)}$	Transition time, TM64Px_IN12		0.25P or 10(3)	ns

(1) P = OSCIN cycle time in ns.
(2) C = TM64P0_IN12 cycle time in ns. For example, when TM64Px_IN12 frequency is 27 MHz, use C = 37.0$\overline{37}$ ns
(3) Whichever is smaller. P = the period of the applied signal. Maintaining transition times as fast as possible is recommended to improve noise immunity on input signals.

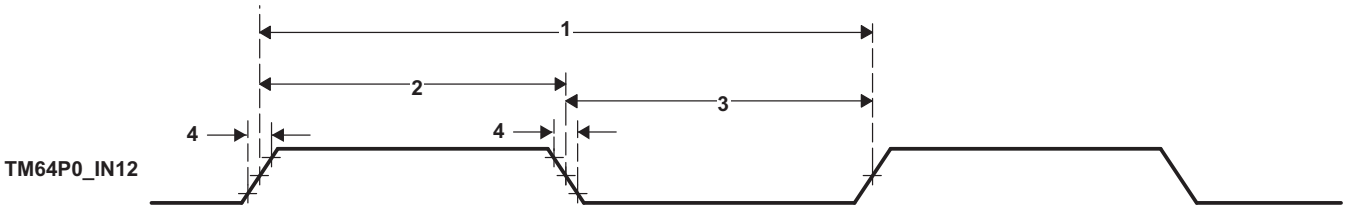

Figure 6-60. Timer Timing

Table 6-87. Switching Characteristics Over Recommended Operating Conditions for Timer Output (1)

No.	PARAMETER		MIN	MAX	UNIT
5	$t_{w(TOUTH)}$	Pulse duration, TM64P0_OUT12 high	4P		ns
6	$t_{w(TOUTL)}$	Pulse duration, TM64P0_OUT12 low	4P		ns

(1) P = OSCIN cycle time in ns. For example, when OSCIN frequency is 27 MHz, use P = 37.0$\overline{37}$ ns.

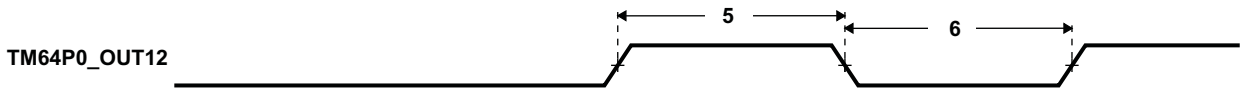

Figure 6-61. Timer Timing

Copyright © 2008–2014, Texas Instruments Incorporated

6.23 Inter-Integrated Circuit Serial Ports (I2C0, I2C1)

6.23.1 I2C Device-Specific Information

Having two I2C modules on the C6745/6747 simplifies system architecture, since one module may be used by the DSP to control local peripherals ICs (DACs, ADCs, etc.) while the other may be used to communicate with other controllers in a system or to implement a user interface. Figure 6-62 is block diagram of the C6745/6747 I2C Module.

Each I2C port supports:

- Compatible with Philips® I2C Specification Revision 2.1 (January 2000)
- Fast Mode up to 400 Kbps (no fail-safe I/O buffers)
- Noise Filter to Remove Noise 50 ns or less
- Seven- and Ten-Bit Device Addressing Modes
- Master (Transmit/Receive) and Slave (Transmit/Receive) Functionality
- Events: DMA, Interrupt, or Polling
- General-Purpose I/O Capability if not used as I2C

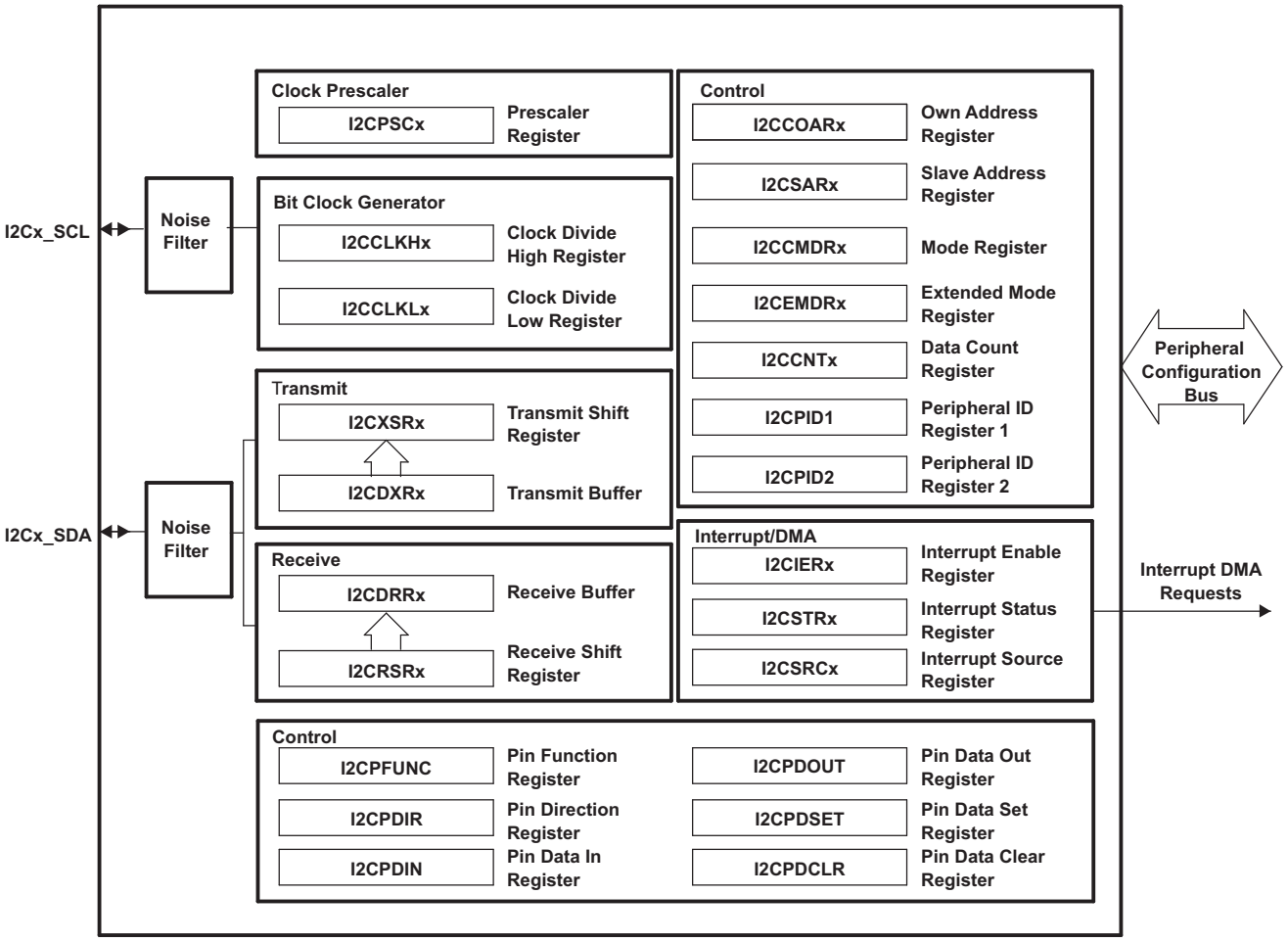

Figure 6-62. I2C Module Block Diagram

6.23.2 I2C Peripheral Registers Description(s)

Table 6-88 is the list of the I2C registers.

Table 6-88. Inter-Integrated Circuit (I2C) Registers

I2C0 BYTE ADDRESS	I2C1 BYTE ADDRESS	ACRONYM	REGISTER DESCRIPTION
0x01C2 2000	0x01E2 8000	ICOAR	I2C Own Address Register
0x01C2 2004	0x01E2 8004	ICIMR	I2C Interrupt Mask Register
0x01C2 2008	0x01E2 8008	ICSTR	I2C Interrupt Status Register
0x01C2 200C	0x01E2 800C	ICCLKL	I2C Clock Low-Time Divider Register
0x01C2 2010	0x01E2 8010	ICCLKH	I2C Clock High-Time Divider Register
0x01C2 2014	0x01E2 8014	ICCNT	I2C Data Count Register
0x01C2 2018	0x01E2 8018	ICDRR	I2C Data Receive Register
0x01C2 201C	0x01E2 801C	ICSAR	I2C Slave Address Register
0x01C2 2020	0x01E2 8020	ICDXR	I2C Data Transmit Register
0x01C2 2024	0x01E2 8024	ICMDR	I2C Mode Register
0x01C2 2028	0x01E2 8028	ICIVR	I2C Interrupt Vector Register
0x01C2 202C	0x01E2 802C	ICEMDR	I2C Extended Mode Register
0x01C2 2030	0x01E2 8030	ICPSC	I2C Prescaler Register
0x01C2 2034	0x01E2 8034	REVID1	I2C Revision Identification Register 1
0x01C2 2038	0x01E2 8038	REVID2	I2C Revision Identification Register 2
0x01C2 2048	0x01E2 8048	ICPFUNC	I2C Pin Function Register
0x01C2 204C	0x01E2 804C	ICPDIR	I2C Pin Direction Register
0x01C2 2050	0x01E2 8050	ICPDIN	I2C Pin Data In Register
0x01C2 2054	0x01E2 8054	ICPDOUT	I2C Pin Data Out Register
0x01C2 2058	0x01E2 8058	ICPDSET	I2C Pin Data Set Register
0x01C2 205C	0x01E2 805C	ICPDCLR	I2C Pin Data Clear Register

Copyright © 2008–2014, Texas Instruments Incorporated

6.23.3 I2C Electrical Data/Timing

6.23.3.1 Inter-Integrated Circuit (I2C) Timing

Table 6-89 and Table 6-90 assume testing over recommended operating conditions (see Figure 6-63 and Figure 6-64).

Table 6-89. I2C Input Timing Requirements

No.	PARAMETER			MIN	MAX	UNIT
1	$t_{c(SCL)}$	Cycle time, I2Cx_SCL	Standard Mode	10		µs
			Fast Mode	2.5		
2	$t_{su(SCLH-SDAL)}$	Setup time, I2Cx_SCL high before I2Cx_SDA low	Standard Mode	4.7		µs
			Fast Mode	0.6		
3	$t_{h(SCLL-SDAL)}$	Hold time, I2Cx_SCL low after I2Cx_SDA low	Standard Mode	4		µs
			Fast Mode	0.6		
4	$t_{w(SCLL)}$	Pulse duration, I2Cx_SCL low	Standard Mode	4.7		µs
			Fast Mode	1.3		
5	$t_{w(SCLH)}$	Pulse duration, I2Cx_SCL high	Standard Mode	4		µs
			Fast Mode	0.6		
6	$t_{su(SDA-SCLH)}$	Setup time, I2Cx_SDA before I2Cx_SCL high	Standard Mode	250		ns
			Fast Mode	100		
7	$t_{h(SDA-SCLL)}$	Hold time, I2Cx_SDA after I2Cx_SCL low	Standard Mode	0		µs
			Fast Mode	0	0.9	
8	$t_{w(SDAH)}$	Pulse duration, I2Cx_SDA high	Standard Mode	4.7		µs
			Fast Mode	1.3		
9	$t_{r(SDA)}$	Rise time, I2Cx_SDA	Standard Mode		1000	ns
			Fast Mode	$20 + 0.1C_b$	300	
10	$t_{r(SCL)}$	Rise time, I2Cx_SCL	Standard Mode		1000	ns
			Fast Mode	$20 + 0.1C_b$	300	
11	$t_{f(SDA)}$	Fall time, I2Cx_SDA	Standard Mode		300	ns
			Fast Mode	$20 + 0.1C_b$	300	
12	$t_{f(SCL)}$	Fall time, I2Cx_SCL	Standard Mode		300	ns
			Fast Mode	$20 + 0.1C_b$	300	
13	$t_{su(SCLH-SDAH)}$	Setup time, I2Cx_SCL high before I2Cx_SDA high	Standard Mode	4		µs
			Fast Mode	0.6		
14	$t_{w(SP)}$	Pulse duration, spike (must be suppressed)	Standard Mode	N/A		ns
			Fast Mode	0	50	
15	C_b	Capacitive load for each bus line	Standard Mode		400	pF
			Fast Mode		400	

Copyright © 2008–2014, Texas Instruments Incorporated

Table 6-90. I2C Switching Characteristics(1)

No.	PARAMETER			MIN	MAX	UNIT
16	$t_{c(SCL)}$	Cycle time, I2Cx_SCL	Standard Mode	10		µs
			Fast Mode	2.5		
17	$t_{su(SCLH-SDAL)}$	Setup time, I2Cx_SCL high before I2Cx_SDA low	Standard Mode	4.7		µs
			Fast Mode	0.6		
18	$t_{h(SDAL-SCLL)}$	Hold time, I2Cx_SCL low after I2Cx_SDA low	Standard Mode	4		µs
			Fast Mode	0.6		
19	$t_{w(SCLL)}$	Pulse duration, I2Cx_SCL low	Standard Mode	4.7		µs
			Fast Mode	1.3		
20	$t_{w(SCLH)}$	Pulse duration, I2Cx_SCL high	Standard Mode	4		µs
			Fast Mode	0.6		
21	$t_{su(SDAV-SCLH)}$	Setup time, I2Cx_SDA valid before I2Cx_SCL high	Standard Mode	250		ns
			Fast Mode	100		
22	$t_{h(SCLL-SDAV)}$	Hold time, I2Cx_SDA valid after I2Cx_SCL low	Standard Mode	0		µs
			Fast Mode	0	0.9	
23	$t_{w(SDAH)}$	Pulse duration, I2Cx_SDA high	Standard Mode	4.7		µs
			Fast Mode	1.3		
28	$t_{su(SCLH-SDAH)}$	Setup time, I2Cx_SCL high before I2Cx_SDA high	Standard Mode	4		µs
			Fast Mode	0.6		

(1) I2C must be configured correctly to meet the timings in Table 6-90.

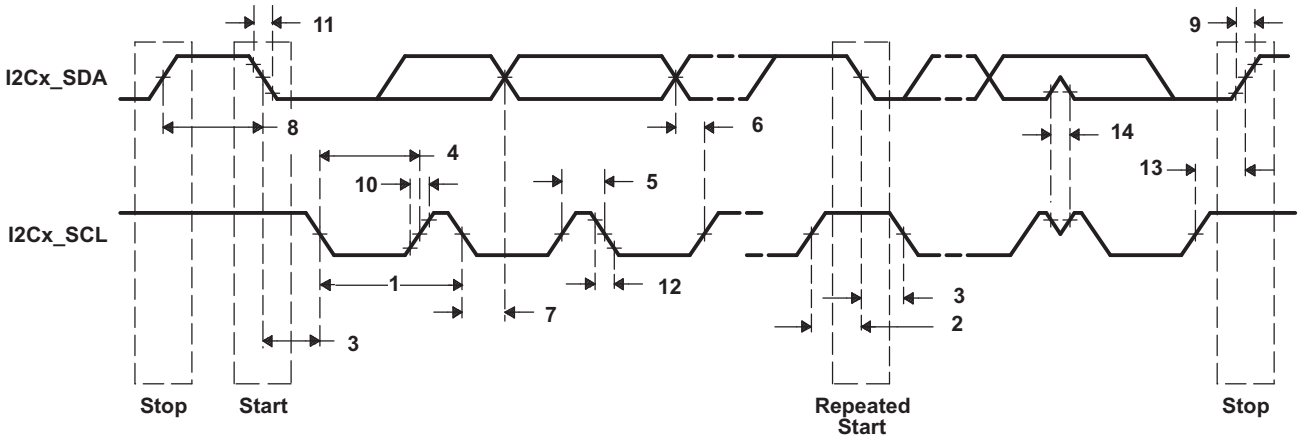

Figure 6-63. I2C Receive Timings

Copyright © 2008–2014, Texas Instruments Incorporated

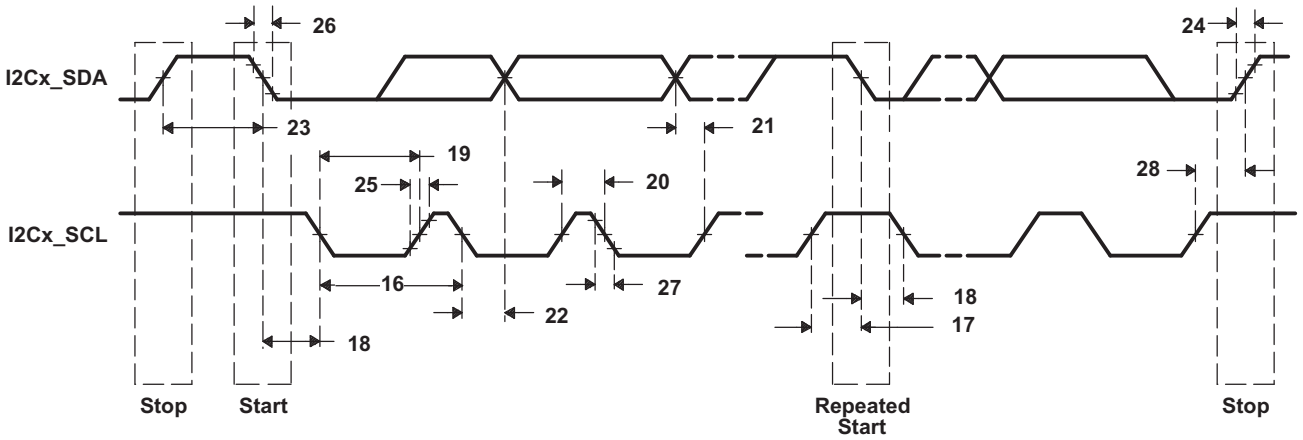

Figure 6-64. I2C Transmit Timings

6.24 Universal Asynchronous Receiver/Transmitter (UART)

C6745/6747 has three UART peripherals. Each UART has the following features:

- 16-byte storage space for both the transmitter and receiver FIFOs
- Autoflow control signals (CTS, RTS) on UART0 only
- 1, 4, 8, or 14 byte selectable receiver FIFO trigger level for autoflow control and DMA
- DMA signaling capability for both received and transmitted data
- Programmable auto-rts and auto-cts for autoflow control
- Programmable Baud Rate up to 3MBaud
- Programmable Oversampling Options of x13 and x16
- Frequency pre-scale values from 1 to 65,535 to generate appropriate baud rates
- Prioritized interrupts
- Programmable serial data formats
  - 5, 6, 7, or 8-bit characters
  - Even, odd, or no parity bit generation and detection
  - 1, 1.5, or 2 stop bit generation
- False start bit detection
- Line break generation and detection
- Internal diagnostic capabilities
  - Loopback controls for communications link fault isolation
  - Break, parity, overrun, and framing error simulation

The UART registers are listed in Section 6.24.1

6.24.1 UART Peripheral Registers Description(s)

Table 6-91 is the list of UART registers.

Table 6-91. UART Registers

UART0 BYTE ADDRESS	UART1 BYTE ADDRESS	UART2 BYTE ADDRESS	ACRONYM	REGISTER DESCRIPTION
0x01C4 2000	0x01D0 C000	0x01D0 D000	RBR	Receiver Buffer Register (read only)
0x01C4 2000	0x01D0 C000	0x01D0 D000	THR	Transmitter Holding Register (write only)
0x01C4 2004	0x01D0 C004	0x01D0 D004	IER	Interrupt Enable Register
0x01C4 2008	0x01D0 C008	0x01D0 D008	IIR	Interrupt Identification Register (read only)
0x01C4 2008	0x01D0 C008	0x01D0 D008	FCR	FIFO Control Register (write only)
0x01C4 200C	0x01D0 C00C	0x01D0 D00C	LCR	Line Control Register
0x01C4 2010	0x01D0 C010	0x01D0 D010	MCR	Modem Control Register
0x01C4 2014	0x01D0 C014	0x01D0 D014	LSR	Line Status Register
0x01C4 2018	0x01D0 C018	0x01D0 D018	MSR	Modem Status Register
0x01C4 201C	0x01D0 C01C	0x01D0 D01C	SCR	Scratchpad Register
0x01C4 2020	0x01D0 C020	0x01D0 D020	DLL	Divisor LSB Latch
0x01C4 2024	0x01D0 C024	0x01D0 D024	DLH	Divisor MSB Latch
0x01C4 2028	0x01D0 C028	0x01D0 D028	REVID1	Revision Identification Register 1
0x01C4 2030	0x01D0 C030	0x01D0 D030	PWREMU_MGMT	Power and Emulation Management Register
0x01C4 2034	0x01D0 C034	0x01D0 D034	MDR	Mode Definition Register

Copyright © 2008–2014, Texas Instruments Incorporated

6.24.2 UART Electrical Data/Timing

Table 6-92. Timing Requirements for UARTx Receive(1) (see Figure 6-65)

No.	PARAMETER		MIN	MAX	UNIT
4	$t_{w(URXDB)}$	Pulse duration, receive data bit (RXDn)	0.96U	1.05U	ns
5	$t_{w(URXSB)}$	Pulse duration, receive start bit	0.96U	1.05U	ns

(1) U = UART baud time = 1/programmed baud rate.

Table 6-93. Switching Characteristics Over Recommended Operating Conditions for UARTx Transmit(1) (see Figure 6-65)

No.	PARAMETER		MIN	MAX	UNIT
1	$f_{(baud)}$	Maximum programmable baud rate		D/E (2) (3)	MBaud(4)
2	$t_{w(UTXDB)}$	Pulse duration, transmit data bit (TXDn)	U - 2	U + 2	ns
3	$t_{w(UTXSB)}$	Pulse duration, transmit start bit	U - 2	U + 2	ns

(1) U = UART baud time = 1/programmed baud rate.
(2) D = UART input clock in MHz. The UART(s) input clock source is PLL0_SYSCLK2.
(3) E = UART divisor x UART sampling rate. The UART divisor is set through the UART divisor latch registers (DLL and DLH). The UART sampling rate is set through the over-sampling mode select bit (OSM_SEL) of the UART mode definition register (MDR).
(4) Baud rate is not indicative of data rate. Actual data rate will be limited by system factors such as EDMA loading, EMIF loading, system frequency, etc.

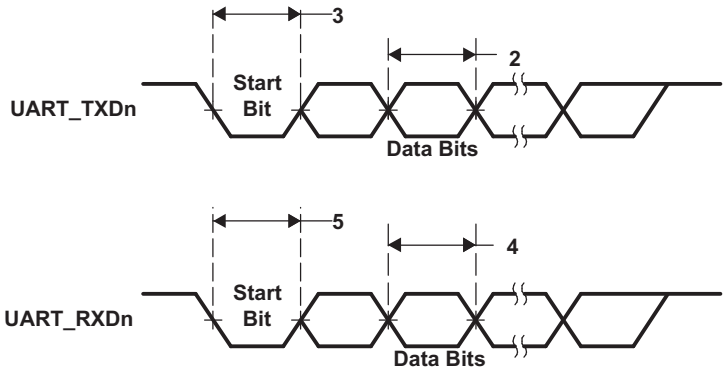

Figure 6-65. UART Transmit/Receive Timing

6.25 USB1 Host Controller Registers (USB1.1 OHCI)

All the device USB interfaces are compliant with Universal Serial Bus Specification, Revision 1.1.

Table 6-94 is the list of USB Host Controller registers.

Table 6-94. USB1 Host Controller Registers

BYTE ADDRESS	ACRONYM	REGISTER DESCRIPTION
0x01E2 5000	HCREVISION	OHCI Revision Number Register
0x01E2 5004	HCCONTROL	HC Operating Mode Register
0x01E2 5008	HCCOMMANDSTATUS	HC Command and Status Register
0x01E2 500C	HCINTERRUPTSTATUS	HC Interrupt and Status Register
0x01E2 5010	HCINTERRUPTENABLE	HC Interrupt Enable Register
0x01E2 5014	HCINTERRUPTDISABLE	HC Interrupt Disable Register
0x01E2 5018	HCHCCA	HC HCAA Address Register(1)
0x01E2 501C	HCPERIODCURRENTED	HC Current Periodic Register(1)
0x01E2 5020	HCCONTROLHEADED	HC Head Control Register(1)
0x01E2 5024	HCCONTROLCURRENTED	HC Current Control Register(1)
0x01E2 5028	HCBULKHEADED	HC Head Bulk Register(1)
0x01E2 502C	HCBULKCURRENTED	HC Current Bulk Register(1)
0x01E2 5030	HCDONEHEAD	HC Head Done Register(1)
0x01E2 5034	HCFMINTERVAL	HC Frame Interval Register
0x01E2 5038	HCFMREMAINING	HC Frame Remaining Register
0x01E2 503C	HCFMNUMBER	HC Frame Number Register
0x01E2 5040	HCPERIODICSTART	HC Periodic Start Register
0x01E2 5044	HCLSTHRESHOLD	HC Low-Speed Threshold Register
0x01E2 5048	HCRHDESCRIPTORA	HC Root Hub A Register
0x01E2 504C	HCRHDESCRIPTORB	HC Root Hub B Register
0x01E2 5050	HCRHSTATUS	HC Root Hub Status Register
0x01E2 5054	HCRHPORTSTATUS1	HC Port 1 Status and Control Register(2)
0x01E2 5058	HCRHPORTSTATUS2	HC Port 2 Status and Control Register(3)

(1) Restrictions apply to the physical addresses used in these registers.
(2) Connected to the integrated USB1.1 phy pins (USB1_DM, USB1_DP).
(3) Although the controller implements two ports, the second port cannot be used.

Table 6-95. Switching Characteristics Over Recommended Operating Conditions for USB1

No.	PARAMETER		LOW SPEED		FULL SPEED		UNIT
			MIN	MAX	MIN	MAX	
U1	t_r	Rise time, USB1_DP and USB1_DM signals(1)	75(1)	300(1)	4(1)	20(1)	ns
U2	t_f	Fall time, USB1_DP and USB1_DM signals(1)	75(1)	300(1)	4(1)	20(1)	ns
U3	t_{RFM}	Rise/Fall time matching(2)	80(2)	120(2)	90(2)	110(2)	%
U4	V_{CRS}	Output signal cross-over voltage(1)	1.3(1)	2(1)	1.3(1)	2(1)	V
U5	t_j	Differential propagation jitter(3)	-25(3)	25(3)	-2(3)	2(3)	ns
U6	f_{op}	Operating frequency(4)		1.5		12	MHz

(1) Low Speed: C_L = 200 pF. High Speed: C_L = 50pF
(2) t_{RFM} =(t_r/t_f) x 100
(3) $t_{jr} = t_{px(1)} - t_{px(0)}$
(4) $f_{op} = 1/t_{per}$

6.25.1 USB1 Unused Signal Configuration

If USB1 is unused, then the USB1 signals should be configured as shown in Section 3.6.23.

Copyright © 2008–2014, Texas Instruments Incorporated

6.26 USB0 OTG (USB2.0 OTG)

The C6745/6747 USB2.0 peripheral supports the following features:

- USB 2.0 peripheral at speeds high speed (HS: 480 Mb/s - C6747 only) and full speed (FS: 12 Mb/s)
- USB 2.0 host at speeds HS (C6747 only), FS, and low speed (LS: 1.5 Mb/s)
- All transfer modes (control, bulk, interrupt, and isochronous)
- 4 Transmit (TX) and 4 Receive (RX) endpoints in addition to endpoint 0
- FIFO RAM
  - 4K endpoint
  - Programmable size
- Integrated USB 2.0 High Speed PHY
- Connects to a standard Charge Pump for VBUS 5 V generation
- RNDIS mode for accelerating RNDIS type protocols using short packet termination over USB

Important Notice: On the original device pinout (marked "A" in the lower right corner of the package), pins USB0_VSSA33 (ZKB package pin H4; PTP package pin 139) and USB0_VSSA (ZKB package pin F3; PTP package pin 136) were connected to ground outside the package. For more robust ESD performance, the USB0 ground references are now connected inside the package on packages marked "B" and the package pins are unconnected. This change will require that any external filter circuits previously referenced to ground at these pins will need to reference the board ground instead.

Important Notice: The USB0 controller module clock (PLL0_SYSCLK2) must be greater than 30 MHz for proper operation of the USB controller. A clock rate of 60 MHz or greater is recommended to avoid data throughput reduction.

Table 6-96 is the list of USB OTG registers.

Table 6-96. Universal Serial Bus OTG (USB0) Registers

BYTE ADDRESS	ACRONYM	REGISTER DESCRIPTION
0x01E0 0000	REVID	Revision Register
0x01E0 0004	CTRLR	Control Register
0x01E0 0008	STATR	Status Register
0x01E0 000C	EMUR	Emulation Register
0x01E0 0010	MODE	Mode Register
0x01E0 0014	AUTOREQ	Autorequest Register
0x01E0 0018	SRPFIXTIME	SRP Fix Time Register
0x01E0 001C	TEARDOWN	Teardown Register
0x01E0 0020	INTSRCR	USB Interrupt Source Register
0x01E0 0024	INTSETR	USB Interrupt Source Set Register
0x01E0 0028	INTCLRR	USB Interrupt Source Clear Register
0x01E0 002C	INTMSKR	USB Interrupt Mask Register
0x01E0 0030	INTMSKSETR	USB Interrupt Mask Set Register
0x01E0 0034	INTMSKCLRR	USB Interrupt Mask Clear Register
0x01E0 0038	INTMASKEDR	USB Interrupt Source Masked Register
0x01E0 003C	EOIR	USB End of Interrupt Register
0x01E0 0040	-	Reserved
0x01E0 0050	GENRNDISSZ1	Generic RNDIS Size EP1
0x01E0 0054	GENRNDISSZ2	Generic RNDIS Size EP2
0x01E0 0058	GENRNDISSZ3	Generic RNDIS Size EP3
0x01E0 005C	GENRNDISSZ4	Generic RNDIS Size EP4
0x01E0 0400	FADDR	Function Address Register
0x01E0 0401	POWER	Power Management Register

Copyright © 2008–2014, Texas Instruments Incorporated

Table 6-96. Universal Serial Bus OTG (USB0) Registers (continued)

BYTE ADDRESS	ACRONYM	REGISTER DESCRIPTION
0x01E0 0402	INTRTX	Interrupt Register for Endpoint 0 plus Transmit Endpoints 1 to 4
0x01E0 0404	INTRRX	Interrupt Register for Receive Endpoints 1 to 4
0x01E0 0406	INTRTXE	Interrupt Enable Register for INTRTX
0x01E0 0408	INTRRXE	Interrupt Enable Register for INTRRX
0x01E0 040A	INTRUSB	Interrupt Register for Common USB Interrupts
0x01E0 040B	INTRUSBE	Interrupt Enable Register for INTRUSB
0x01E0 040C	FRAME	Frame Number Register
0x01E0 040E	INDEX	Index Register for Selecting the Endpoint Status and Control Registers
0x01E0 040F	TESTMODE	Register to Enable the USB 2.0 Test Modes
INDEXED REGISTERS These registers operate on the endpoint selected by the INDEX register		
0x01E0 0410	TXMAXP	Maximum Packet Size for Peripheral/Host Transmit Endpoint (Index register set to select Endpoints 1-4 only)
0x01E0 0412	PERI_CSR0	Control Status Register for Endpoint 0 in Peripheral Mode. (Index register set to select Endpoint 0)
	HOST_CSR0	Control Status Register for Endpoint 0 in Host Mode. (Index register set to select Endpoint 0)
	PERI_TXCSR	Control Status Register for Peripheral Transmit Endpoint. (Index register set to select Endpoints 1-4)
	HOST_TXCSR	Control Status Register for Host Transmit Endpoint. (Index register set to select Endpoints 1-4)
0x01E0 0414	RXMAXP	Maximum Packet Size for Peripheral/Host Receive Endpoint (Index register set to select Endpoints 1-4 only)
0x01E0 0416	PERI_RXCSR	Control Status Register for Peripheral Receive Endpoint. (Index register set to select Endpoints 1-4)
	HOST_RXCSR	Control Status Register for Host Receive Endpoint. (Index register set to select Endpoints 1-4)
0x01E0 0418	COUNT0	Number of Received Bytes in Endpoint 0 FIFO. (Index register set to select Endpoint 0)
	RXCOUNT	Number of Bytes in Host Receive Endpoint FIFO. (Index register set to select Endpoints 1- 4)
0x01E0 041A	HOST_TYPE0	Defines the speed of Endpoint 0
	HOST_TXTYPE	Sets the operating speed, transaction protocol and peripheral endpoint number for the host Transmit endpoint. (Index register set to select Endpoints 1-4 only)
0x01E0 041B	HOST_NAKLIMIT0	Sets the NAK response timeout on Endpoint 0. (Index register set to select Endpoint 0)
	HOST_TXINTERVAL	Sets the polling interval for Interrupt/ISOC transactions or the NAK response timeout on Bulk transactions for host Transmit endpoint. (Index register set to select Endpoints 1-4 only)
0x01E0 041C	HOST_RXTYPE	Sets the operating speed, transaction protocol and peripheral endpoint number for the host Receive endpoint. (Index register set to select Endpoints 1-4 only)
0x01E0 041D	HOST_RXINTERVAL	Sets the polling interval for Interrupt/ISOC transactions or the NAK response timeout on Bulk transactions for host Receive endpoint. (Index register set to select Endpoints 1-4 only)
0x01E0 041F	CONFIGDATA	Returns details of core configuration. (Index register set to select Endpoint 0)
FIFO		
0x01E0 0420	FIFO0	Transmit and Receive FIFO Register for Endpoint 0
0x01E0 0424	FIFO1	Transmit and Receive FIFO Register for Endpoint 1
0x01E0 0428	FIFO2	Transmit and Receive FIFO Register for Endpoint 2
0x01E0 042C	FIFO3	Transmit and Receive FIFO Register for Endpoint 3
0x01E0 0430	FIFO4	Transmit and Receive FIFO Register for Endpoint 4

Copyright © 2008–2014, Texas Instruments Incorporated

Table 6-96. Universal Serial Bus OTG (USB0) Registers (continued)

BYTE ADDRESS	ACRONYM	REGISTER DESCRIPTION
OTG DEVICE CONTROL		
0x01E0 0460	DEVCTL	Device Control Register
DYNAMIC FIFO CONTROL		
0x01E0 0462	TXFIFOSZ	Transmit Endpoint FIFO Size (Index register set to select Endpoints 1-4 only)
0x01E0 0463	RXFIFOSZ	Receive Endpoint FIFO Size (Index register set to select Endpoints 1-4 only)
0x01E0 0464	TXFIFOADDR	Transmit Endpoint FIFO Address (Index register set to select Endpoints 1-4 only)
0x01E0 0466	RXFIFOADDR	Receive Endpoint FIFO Address (Index register set to select Endpoints 1-4 only)
0x01E0 046C	HWVERS	Hardware Version Register
TARGET ENDPOINT 0 CONTROL REGISTERS, VALID ONLY IN HOST MODE		
0x01E0 0480	TXFUNCADDR	Address of the target function that has to be accessed through the associated Transmit Endpoint.
0x01E0 0482	TXHUBADDR	Address of the hub that has to be accessed through the associated Transmit Endpoint. This is used only when full speed or low speed device is connected via a USB2.0 high-speed hub.
0x01E0 0483	TXHUBPORT	Port of the hub that has to be accessed through the associated Transmit Endpoint. This is used only when full speed or low speed device is connected via a USB2.0 high-speed hub.
0x01E0 0484	RXFUNCADDR	Address of the target function that has to be accessed through the associated Receive Endpoint.
0x01E0 0486	RXHUBADDR	Address of the hub that has to be accessed through the associated Receive Endpoint. This is used only when full speed or low speed device is connected via a USB2.0 high-speed hub.
0x01E0 0487	RXHUBPORT	Port of the hub that has to be accessed through the associated Receive Endpoint. This is used only when full speed or low speed device is connected via a USB2.0 high-speed hub.
TARGET ENDPOINT 1 CONTROL REGISTERS, VALID ONLY IN HOST MODE		
0x01E0 0488	TXFUNCADDR	Address of the target function that has to be accessed through the associated Transmit Endpoint.
0x01E0 048A	TXHUBADDR	Address of the hub that has to be accessed through the associated Transmit Endpoint. This is used only when full speed or low speed device is connected via a USB2.0 high-speed hub.
0x01E0 048B	TXHUBPORT	Port of the hub that has to be accessed through the associated Transmit Endpoint. This is used only when full speed or low speed device is connected via a USB2.0 high-speed hub.
0x01E0 048C	RXFUNCADDR	Address of the target function that has to be accessed through the associated Receive Endpoint.
0x01E0 048E	RXHUBADDR	Address of the hub that has to be accessed through the associated Receive Endpoint. This is used only when full speed or low speed device is connected via a USB2.0 high-speed hub.
0x01E0 048F	RXHUBPORT	Port of the hub that has to be accessed through the associated Receive Endpoint. This is used only when full speed or low speed device is connected via a USB2.0 high-speed hub.
TARGET ENDPOINT 2 CONTROL REGISTERS, VALID ONLY IN HOST MODE		
0x01E0 0490	TXFUNCADDR	Address of the target function that has to be accessed through the associated Transmit Endpoint.
0x01E0 0492	TXHUBADDR	Address of the hub that has to be accessed through the associated Transmit Endpoint. This is used only when full speed or low speed device is connected via a USB2.0 high-speed hub.
0x01E0 0493	TXHUBPORT	Port of the hub that has to be accessed through the associated Transmit Endpoint. This is used only when full speed or low speed device is connected via a USB2.0 high-speed hub.
0x01E0 0494	RXFUNCADDR	Address of the target function that has to be accessed through the associated Receive Endpoint.

Copyright © 2008–2014, Texas Instruments Incorporated

Table 6-96. Universal Serial Bus OTG (USB0) Registers (continued)

BYTE ADDRESS	ACRONYM	REGISTER DESCRIPTION
0x01E0 0496	RXHUBADDR	Address of the hub that has to be accessed through the associated Receive Endpoint. This is used only when full speed or low speed device is connected via a USB2.0 high-speed hub.
0x01E0 0497	RXHUBPORT	Port of the hub that has to be accessed through the associated Receive Endpoint. This is used only when full speed or low speed device is connected via a USB2.0 high-speed hub.
TARGET ENDPOINT 3 CONTROL REGISTERS, VALID ONLY IN HOST MODE		
0x01E0 0498	TXFUNCADDR	Address of the target function that has to be accessed through the associated Transmit Endpoint.
0x01E0 049A	TXHUBADDR	Address of the hub that has to be accessed through the associated Transmit Endpoint. This is used only when full speed or low speed device is connected via a USB2.0 high-speed hub.
0x01E0 049B	TXHUBPORT	Port of the hub that has to be accessed through the associated Transmit Endpoint. This is used only when full speed or low speed device is connected via a USB2.0 high-speed hub.
0x01E0 049C	RXFUNCADDR	Address of the target function that has to be accessed through the associated Receive Endpoint.
0x01E0 049E	RXHUBADDR	Address of the hub that has to be accessed through the associated Receive Endpoint. This is used only when full speed or low speed device is connected via a USB2.0 high-speed hub.
0x01E0 049F	RXHUBPORT	Port of the hub that has to be accessed through the associated Receive Endpoint. This is used only when full speed or low speed device is connected via a USB2.0 high-speed hub.
TARGET ENDPOINT 4 CONTROL REGISTERS, VALID ONLY IN HOST MODE		
0x01E0 04A0	TXFUNCADDR	Address of the target function that has to be accessed through the associated Transmit Endpoint.
0x01E0 04A2	TXHUBADDR	Address of the hub that has to be accessed through the associated Transmit Endpoint. This is used only when full speed or low speed device is connected via a USB2.0 high-speed hub.
0x01E0 04A3	TXHUBPORT	Port of the hub that has to be accessed through the associated Transmit Endpoint. This is used only when full speed or low speed device is connected via a USB2.0 high-speed hub.
0x01E0 04A4	RXFUNCADDR	Address of the target function that has to be accessed through the associated Receive Endpoint.
0x01E0 04A6	RXHUBADDR	Address of the hub that has to be accessed through the associated Receive Endpoint. This is used only when full speed or low speed device is connected via a USB2.0 high-speed hub.
0x01E0 04A7	RXHUBPORT	Port of the hub that has to be accessed through the associated Receive Endpoint. This is used only when full speed or low speed device is connected via a USB2.0 high-speed hub.
CONTROL AND STATUS REGISTER FOR ENDPOINT 0		
0x01E0 0502	PERI_CSR0	Control Status Register for Endpoint 0 in Peripheral Mode
	HOST_CSR0	Control Status Register for Endpoint 0 in Host Mode
0x01E0 0508	COUNT0	Number of Received Bytes in Endpoint 0 FIFO
0x01E0 050A	HOST_TYPE0	Defines the Speed of Endpoint 0
0x01E0 050B	HOST_NAKLIMIT0	Sets the NAK Response Timeout on Endpoint 0
0x01E0 050F	CONFIGDATA	Returns details of core configuration.
CONTROL AND STATUS REGISTER FOR ENDPOINT 1		
0x01E0 0510	TXMAXP	Maximum Packet Size for Peripheral/Host Transmit Endpoint
0x01E0 0512	PERI_TXCSR	Control Status Register for Peripheral Transmit Endpoint (peripheral mode)
	HOST_TXCSR	Control Status Register for Host Transmit Endpoint (host mode)
0x01E0 0514	RXMAXP	Maximum Packet Size for Peripheral/Host Receive Endpoint

Copyright © 2008–2014, Texas Instruments Incorporated

Table 6-96. Universal Serial Bus OTG (USB0) Registers (continued)

BYTE ADDRESS	ACRONYM	REGISTER DESCRIPTION
0x01E0 0516	PERI_RXCSR	Control Status Register for Peripheral Receive Endpoint (peripheral mode)
	HOST_RXCSR	Control Status Register for Host Receive Endpoint (host mode)
0x01E0 0518	RXCOUNT	Number of Bytes in Host Receive endpoint FIFO
0x01E0 051A	HOST_TXTYPE	Sets the operating speed, transaction protocol and peripheral endpoint number for the host Transmit endpoint.
0x01E0 051B	HOST_TXINTERVAL	Sets the polling interval for Interrupt/ISOC transactions or the NAK response timeout on Bulk transactions for host Transmit endpoint.
0x01E0 051C	HOST_RXTYPE	Sets the operating speed, transaction protocol and peripheral endpoint number for the host Receive endpoint.
0x01E0 051D	HOST_RXINTERVAL	Sets the polling interval for Interrupt/ISOC transactions or the NAK response timeout on Bulk transactions for host Receive endpoint.
CONTROL AND STATUS REGISTER FOR ENDPOINT 2		
0x01E0 0520	TXMAXP	Maximum Packet Size for Peripheral/Host Transmit Endpoint
0x01E0 0522	PERI_TXCSR	Control Status Register for Peripheral Transmit Endpoint (peripheral mode)
	HOST_TXCSR	Control Status Register for Host Transmit Endpoint (host mode)
0x01E0 0524	RXMAXP	Maximum Packet Size for Peripheral/Host Receive Endpoint
0x01E0 0526	PERI_RXCSR	Control Status Register for Peripheral Receive Endpoint (peripheral mode)
	HOST_RXCSR	Control Status Register for Host Receive Endpoint (host mode)
0x01E0 0528	RXCOUNT	Number of Bytes in Host Receive endpoint FIFO
0x01E0 052A	HOST_TXTYPE	Sets the operating speed, transaction protocol and peripheral endpoint number for the host Transmit endpoint.
0x01E0 052B	HOST_TXINTERVAL	Sets the polling interval for Interrupt/ISOC transactions or the NAK response timeout on Bulk transactions for host Transmit endpoint.
0x01E0 052C	HOST_RXTYPE	Sets the operating speed, transaction protocol and peripheral endpoint number for the host Receive endpoint.
0x01E0 052D	HOST_RXINTERVAL	Sets the polling interval for Interrupt/ISOC transactions or the NAK response timeout on Bulk transactions for host Receive endpoint.
CONTROL AND STATUS REGISTER FOR ENDPOINT 3		
0x01E0 0530	TXMAXP	Maximum Packet Size for Peripheral/Host Transmit Endpoint
0x01E0 0532	PERI_TXCSR	Control Status Register for Peripheral Transmit Endpoint (peripheral mode)
	HOST_TXCSR	Control Status Register for Host Transmit Endpoint (host mode)
0x01E0 0534	RXMAXP	Maximum Packet Size for Peripheral/Host Receive Endpoint
0x01E0 0536	PERI_RXCSR	Control Status Register for Peripheral Receive Endpoint (peripheral mode)
	HOST_RXCSR	Control Status Register for Host Receive Endpoint (host mode)
0x01E0 0538	RXCOUNT	Number of Bytes in Host Receive endpoint FIFO
0x01E0 053A	HOST_TXTYPE	Sets the operating speed, transaction protocol and peripheral endpoint number for the host Transmit endpoint.
0x01E0 053B	HOST_TXINTERVAL	Sets the polling interval for Interrupt/ISOC transactions or the NAK response timeout on Bulk transactions for host Transmit endpoint.
0x01E0 053C	HOST_RXTYPE	Sets the operating speed, transaction protocol and peripheral endpoint number for the host Receive endpoint.
0x01E0 053D	HOST_RXINTERVAL	Sets the polling interval for Interrupt/ISOC transactions or the NAK response timeout on Bulk transactions for host Receive endpoint.
CONTROL AND STATUS REGISTER FOR ENDPOINT 4		

Copyright © 2008–2014, Texas Instruments Incorporated

Table 6-96. Universal Serial Bus OTG (USB0) Registers (continued)

BYTE ADDRESS	ACRONYM	REGISTER DESCRIPTION
0x01E0 0540	TXMAXP	Maximum Packet Size for Peripheral/Host Transmit Endpoint
0x01E0 0542	PERI_TXCSR	Control Status Register for Peripheral Transmit Endpoint (peripheral mode)
	HOST_TXCSR	Control Status Register for Host Transmit Endpoint (host mode)
0x01E0 0544	RXMAXP	Maximum Packet Size for Peripheral/Host Receive Endpoint
0x01E0 0546	PERI_RXCSR	Control Status Register for Peripheral Receive Endpoint (peripheral mode)
	HOST_RXCSR	Control Status Register for Host Receive Endpoint (host mode)
0x01E0 0548	RXCOUNT	Number of Bytes in Host Receive endpoint FIFO
0x01E0 054A	HOST_TXTYPE	Sets the operating speed, transaction protocol and peripheral endpoint number for the host Transmit endpoint.
0x01E0 054B	HOST_TXINTERVAL	Sets the polling interval for Interrupt/ISOC transactions or the NAK response timeout on Bulk transactions for host Transmit endpoint.
0x01E0 054C	HOST_RXTYPE	Sets the operating speed, transaction protocol and peripheral endpoint number for the host Receive endpoint.
0x01E0 054D	HOST_RXINTERVAL	Sets the polling interval for Interrupt/ISOC transactions or the NAK response timeout on Bulk transactions for host Receive endpoint.
DMA REGISTERS		
0x01E0 1000	DMAREVID	DMA Revision Register
0x01E0 1004	TDFDQ	DMA Teardown Free Descriptor Queue Control Register
0x01E0 1008	DMAEMU	DMA Emulation Control Register
0x01E0 1800	TXGCR[0]	Transmit Channel 0 Global Configuration Register
0x01E0 1808	RXGCR[0]	Receive Channel 0 Global Configuration Register
0x01E0 180C	RXHPCRA[0]	Receive Channel 0 Host Packet Configuration Register A
0x01E0 1810	RXHPCRB[0]	Receive Channel 0 Host Packet Configuration Register B
0x01E0 1820	TXGCR[1]	Transmit Channel 1 Global Configuration Register
0x01E0 1828	RXGCR[1]	Receive Channel 1 Global Configuration Register
0x01E0 182C	RXHPCRA[1]	Receive Channel 1 Host Packet Configuration Register A
0x01E0 1830	RXHPCRB[1]	Receive Channel 1 Host Packet Configuration Register B
0x01E0 1840	TXGCR[2]	Transmit Channel 2 Global Configuration Register
0x01E0 1848	RXGCR[2]	Receive Channel 2 Global Configuration Register
0x01E0 184C	RXHPCRA[2]	Receive Channel 2 Host Packet Configuration Register A
0x01E0 1850	RXHPCRB[2]	Receive Channel 2 Host Packet Configuration Register B
0x01E0 1860	TXGCR[3]	Transmit Channel 3 Global Configuration Register
0x01E0 1868	RXGCR[3]	Receive Channel 3 Global Configuration Register
0x01E0 186C	RXHPCRA[3]	Receive Channel 3 Host Packet Configuration Register A
0x01E0 1870	RXHPCRB[3]	Receive Channel 3 Host Packet Configuration Register B
0x01E0 2000	DMA_SCHED_CTRL	DMA Scheduler Control Register
0x01E0 2800	WORD[0]	DMA Scheduler Table Word 0
0x01E0 2804	WORD[1]	DMA Scheduler Table Word 1
. . .	. . .	. . .
0x01E0 28FC	WORD[63]	DMA Scheduler Table Word 63
QUEUE MANAGER REGISTERS		
0x01E0 4000	QMGRREVID	Queue Manager Revision Register
0x01E0 4008	DIVERSION	Queue Diversion Register
0x01E0 4020	FDBSC0	Free Descriptor/Buffer Starvation Count Register 0
0x01E0 4024	FDBSC1	Free Descriptor/Buffer Starvation Count Register 1
0x01E0 4028	FDBSC2	Free Descriptor/Buffer Starvation Count Register 2

Copyright © 2008–2014, Texas Instruments Incorporated

Table 6-96. Universal Serial Bus OTG (USB0) Registers (continued)

BYTE ADDRESS	ACRONYM	REGISTER DESCRIPTION
0x01E0 402C	FDBSC3	Free Descriptor/Buffer Starvation Count Register 3
0x01E0 4080	LRAM0BASE	Linking RAM Region 0 Base Address Register
0x01E0 4084	LRAM0SIZE	Linking RAM Region 0 Size Register
0x01E0 4088	LRAM1BASE	Linking RAM Region 1 Base Address Register
0x01E0 4090	PEND0	Queue Pending Register 0
0x01E0 4094	PEND1	Queue Pending Register 1
0x01E0 5000	QMEMRBASE[0]	Memory Region 0 Base Address Register
0x01E0 5004	QMEMRCTRL[0]	Memory Region 0 Control Register
0x01E0 5010	QMEMRBASE[1]	Memory Region 1 Base Address Register
0x01E0 5014	QMEMRCTRL[1]	Memory Region 1 Control Register
. . .	. . .	. . .
0x01E0 50F0	QMEMRBASE[15]	Memory Region 15 Base Address Register
0x01E0 50F4	QMEMRCTRL[15]	Memory Region 15 Control Register
0x01E0 600C	CTRLD[0]	Queue Manager Queue 0 Control Register D
0x01E0 601C	CTRLD[1]	Queue Manager Queue 1 Control Register D
. . .	. . .	. . .
0x01E0 63FC	CTRLD[63]	Queue Manager Queue 63 Status Register D
0x01E0 6800	QSTATA[0]	Queue Manager Queue 0 Status Register A
0x01E0 6804	QSTATB[0]	Queue Manager Queue 0 Status Register B
0x01E0 6808	QSTATC[0]	Queue Manager Queue 0 Status Register C
0x01E0 6810	QSTATA[1]	Queue Manager Queue 1 Status Register A
0x01E0 6814	QSTATB[1]	Queue Manager Queue 1 Status Register B
0x01E0 6818	QSTATC[1]	Queue Manager Queue 1 Status Register C
. . .	. . .	. . .
0x01E0 6BF0	QSTATA[63]	Queue Manager Queue 63 Status Register A
0x01E0 6BF4	QSTATB[63]	Queue Manager Queue 63 Status Register B
0x01E0 6BF8	QSTATC[63]	Queue Manager Queue 63 Status Register C

Copyright © 2008–2014, Texas Instruments Incorporated

6.26.1 USB2.0 Electrical Data/Timing

The USB PHY PLL can support input clock of the following frequencies: 12.0 MHz, 13.0 MHz, 19.2 MHz, 20.0 MHz, 24.0 MHz, 26.0 MHz, 38.4 MHz, 40.0 MHz or 48.0 MHz. USB_REFCLKIN jitter tolerance is 50 ppm maximum.

C6747 supports low-speed, full-speed and high-speed.

C6745 supports only low-speed and full-speed.

Table 6-97. Switching Characteristics Over Recommended Operating Conditions for USB2.0 (see Figure 6-66)

No.	PARAMETER		LOW SPEED 1.5 Mbps		FULL SPEED 12 Mbps		HIGH SPEED 480 Mbps		UNIT
			MIN	MAX	MIN	MAX	MIN	MAX	
1	$t_{r(D)}$	Rise time, USB0_DP and USB0_DM signals (1)	75	300	4	20	0.5		ns
2	$t_{f(D)}$	Fall time, USB0_DP and USB0_DM signals (1)	75	300	4	20	0.5		ns
3	t_{rfM}	Rise/Fall time, matching (2)	80	120	90	111	–	–	%
4	V_{CRS}	Output signal cross-over voltage (1)	1.3	2	1.3	2	–	–	V
5	$t_{jr(source)NT}$	Source (Host) Driver jitter, next transition		2		2			(3)ns
	$t_{jr(FUNC)NT}$	Function Driver jitter, next transition		25		2		(3)	ns
6	$t_{jr(source)PT}$	Source (Host) Driver jitter, paired transition (4)		1		1		(3)	ns
	$t_{jr(FUNC)PT}$	Function Driver jitter, paired transition		10		1		(3)	ns
7	$t_{w(EOPT)}$	Pulse duration, EOP transmitter (5)	1250	1500	160	175	–	–	ns
8	$t_{w(EOPR)}$	Pulse duration, EOP receiver (5)	670		82		–		ns
9	$t_{(DRATE)}$	Data Rate		1.5		12		480	Mb/s
10	Z_{DRV}	Driver Output Resistance	–	–	40.5	49.5	40.5	49.5	Ω
11	Z_{INP}	Receiver Input Impedance	100k		100k		-	-	Ω

(1) Low Speed: C_L = 200 pF, Full Speed: C_L = 50 pF, High Speed: C_L = 50 pF
(2) $t_{RFM} = (t_r/t_f) \times 100$. [Excluding the first transaction from the Idle state.]
(3) For more detailed information, see the Universal Serial Bus Specification Revision 2.0, Chapter 7. Electrical.
(4) $t_{jr} = t_{px(1)} - t_{px(0)}$
(5) Must accept as valid EOP

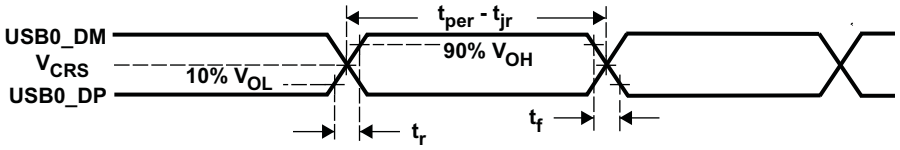

Figure 6-66. USB0 Integrated Transceiver Interface Timing

6.26.2 USB0 Unused Signal Configuration

If USB0 is unused, then the USB0 signals should be configured as shown in Section 3.6.23.

Copyright © 2008–2014, Texas Instruments Incorporated

6.27 Host-Port Interface (UHPI)

6.27.1 HPI Device-Specific Information

The device includes a user-configurable 16-bit Host-port interface (HPI16). See the *TMS320C6745/C6747 DSP Peripherals Overview Reference Guide.* (SPRUFK9) for more details.

6.27.2 HPI Peripheral Register Description(s)

Table 6-98. HPI Control Registers

BYTE ADDRESS	ACRONYM	REGISTER DESCRIPTION	COMMENTS
0x01E1 0000	PID	Peripheral Identification Register	
0x01E1 0004	PWREMU_MGMT	HPI power and emulation management register	The CPU has read/write access to the PWREMU_MGMT register.
0x01E1 0008	-	Reserved	
0x01E1 000C	GPIO_EN	General Purpose IO Enable Register	
0x01E1 0010	GPIO_DIR1	General Purpose IO Direction Register 1	
0x01E1 0014	GPIO_DAT1	General Purpose IO Data Register 1	
0x01E1 0018	GPIO_DIR2	General Purpose IO Direction Register 2	
0x01E1 001C	GPIO_DAT2	General Purpose IO Data Register 2	
0x01E1 0020	GPIO_DIR3	General Purpose IO Direction Register 3	
0x01E1 0024	GPIO_DAT3	General Purpose IO Data Register 3	
01E1 0028	-	Reserved	
01E1 002C	-	Reserved	
01E1 0030	HPIC	HPI control register	The Host and the CPU both have read/write access to the HPIC register.
01E1 0034	HPIA (HPIAW)(1)	HPI address register (Write)	The Host has read/write access to the HPIA registers. The CPU has only read access to the HPIA registers.
01E1 0038	HPIA (HPIAR)(1)	HPI address register (Read)	
01E1 000C - 01E1 07FF	-	Reserved	

(1) There are two 32-bit HPIA registers: HPIAR for read operations and HPIAW for write operations. The HPI can be configured such that HPIAR and HPIAW act as a single 32-bit HPIA (single-HPIA mode) or as two separate 32-bit HPIAs (dual-HPIA mode) from the perspective of the Host. The CPU can access HPIAW and HPIAR independently.

Copyright © 2008–2014, Texas Instruments Incorporated

6.27.3 HPI Electrical Data/Timing

Table 6-99. Timing Requirements for Host-Port Interface Cycles(1) (2)

No.	PARAMETER		MIN	MAX	UNIT
1	$t_{su(SELV-HSTBL)}$	Setup time, select signals(3) valid before $\overline{\text{UHPI_HSTROBE}}$ low	5		ns
2	$t_{h(HSTBL-SELV)}$	Hold time, select signals(3) valid after $\overline{\text{UHPI_HSTROBE}}$ low	2		ns
3	$t_{w(HSTBL)}$	Pulse duration, $\overline{\text{UHPI_HSTROBE}}$ active low	15		ns
4	$t_{w(HSTBH)}$	Pulse duration, $\overline{\text{UHPI_HSTROBE}}$ inactive high between consecutive accesses	2M		ns
9	$t_{su(SELV-HASL)}$	Setup time, selects signals valid before $\overline{\text{UHPI_HAS}}$ low	5		ns
10	$t_{h(HASL-SELV)}$	Hold time, select signals valid after $\overline{\text{UHPI_HAS}}$ low	2		ns
11	$t_{su(HDV-HSTBH)}$	Setup time, host data valid before $\overline{\text{UHPI_HSTROBE}}$ high	5		ns
12	$t_{h(HSTBH-HDV)}$	Hold time, host data valid after $\overline{\text{UHPI_HSTROBE}}$ high	2		ns
13	$t_{h(HRDYL-HSTBH)}$	Hold time, $\overline{\text{UHPI_HSTROBE}}$ high after $\overline{\text{UHPI_HRDY}}$ low. $\overline{\text{UHPI_HSTROBE}}$ should not be inactivated until $\overline{\text{UHPI_HRDY}}$ is active (low); otherwise, HPI writes will not complete properly.	2		ns
16	$t_{su(HASL-HSTBL)}$	Setup time, $\overline{\text{UHPI_HAS}}$ low before $\overline{\text{UHPI_HSTROBE}}$ low	2		ns
17	$t_{h(HSTBL-HASH)}$	Hold time, $\overline{\text{UHPI_HAS}}$ low after $\overline{\text{UHPI_HSTROBE}}$ low	2		ns

(1) $\overline{\text{UHPI_HSTROBE}}$ refers to the following logical operation on $\overline{\text{UHPI_HCS}}$, $\overline{\text{UHPI_HDS1}}$, and $\overline{\text{UHPI_HDS2}}$: [NOT($\overline{\text{UHPI_HDS1}}$ XOR $\overline{\text{UHPI_HDS2}}$)] OR $\overline{\text{UHPI_HCS}}$.
(2) M=SYSCLK2 period (CPU clock frequency)/2 in ns. For example, when running parts at 300 MHz, use M=6.67 ns.
(3) Select signals include: UHPI_HCNTL[1:0], UHPI_$\overline{\text{HRW}}$ and UHPI_HHWIL.

Copyright © 2008–2014, Texas Instruments Incorporated

Table 6-100. Switching Characteristics for Host-Port Interface Cycles(1) (2) (3)

No.	PARAMETER			MIN	MAX	UNIT
5	$t_{d(HSTBL-HRDYV)}$	Delay time, UHPI_HSTROBE low to UHPI_HRDY valid	For HPI Write, UHPI_HRDY can go high (*not ready*) for these HPI Write conditions; otherwise, UHPI_HRDY stays low (*ready*): *Case 1*: Back-to-back HPIA writes (can be either first or second half-word) *Case 2*: HPIA write following a PREFETCH command (can be either first or second half-word) *Case 3*: HPID write when FIFO is full or flushing (can be either first or second half-word) *Case 4*: HPIA write and Write FIFO not empty For HPI Read, UHPI_HRDY can go high (*not ready*) for these HPI Read conditions: *Case 1*: HPID read (with auto-increment) and data not in Read FIFO (can only happen to first half-word of HPID access) *Case 2*: First half-word access of HPID Read without auto-increment For HPI Read, UHPI_HRDY stays low (*ready*) for these HPI Read conditions: *Case 1*: HPID read with auto-increment and data is already in Read FIFO (applies to either half-word of HPID access) *Case 2*: HPID read without auto-increment and data is already in Read FIFO (always applies to second half-word of HPID access) *Case 3*: HPIC or HPIA read (applies to either half-word access)		12	ns
5a	$t_{d(HASL-HRDYV)}$	Delay time, UHPI_HAS low to UHPI_HRDY valid			13	
6	$t_{en(HSTBL-HDLZ)}$	Enable time, HD driven from UHPI_HSTROBE low		2		ns
7	$t_{d(HRDYL-HDV)}$	Delay time, UHPI_HRDY low to HD valid			0	ns
8	$t_{oh(HSTBH-HDV)}$	Output hold time, HD valid after UHPI_HSTROBE high		1.5		ns
14	$t_{dis(HSTBH-HDHZ)}$	Disable time, HD high-impedance from UHPI_ HSTROBE high			12	ns
15	$t_{d(HSTBL-HDV)}$	Delay time, UHPI_HSTROBE low to HD valid	For HPI Read. Applies to conditions where data is already residing in HPID/FIFO: *Case 1*: HPIC or HPIA read *Case 2*: First half-word of HPID read with auto-increment and data is already in Read FIFO *Case 3*: Second half-word of HPID read with or without auto-increment		15	ns
18	$t_{d(HSTBH-HRDYV)}$	Delay time, UHPI_HSTROBE high to UHPI_HRDY valid	For HPI Write, UHPI_HRDY can go high (*not ready*) for these HPI Write conditions; otherwise, UHPI_HRDY stays low (*ready*): *Case 1*: HPID write when Write FIFO is full (can happen to either half-word) *Case 2*: HPIA write (can happen to either half-word) *Case 3*: HPID write without auto-increment (only happens to second half-word)		12	ns

(1) M=SYSCLK2 period (CPU clock frequency)/2 in ns.
(2) UHPI_HSTROBE refers to the following logical operation on UHPI_HCS, UHPI_HDS1, and UHPI_HDS2: [NOT(UHPI_HDS1 XOR UHPI_HDS2)] OR UHPI_HCS.
(3) By design, whenever UHPI_HCS is driven inactive (high), HPI will drive UHPI_HRDY active (low).

Copyright © 2008–2014, Texas Instruments Incorporated

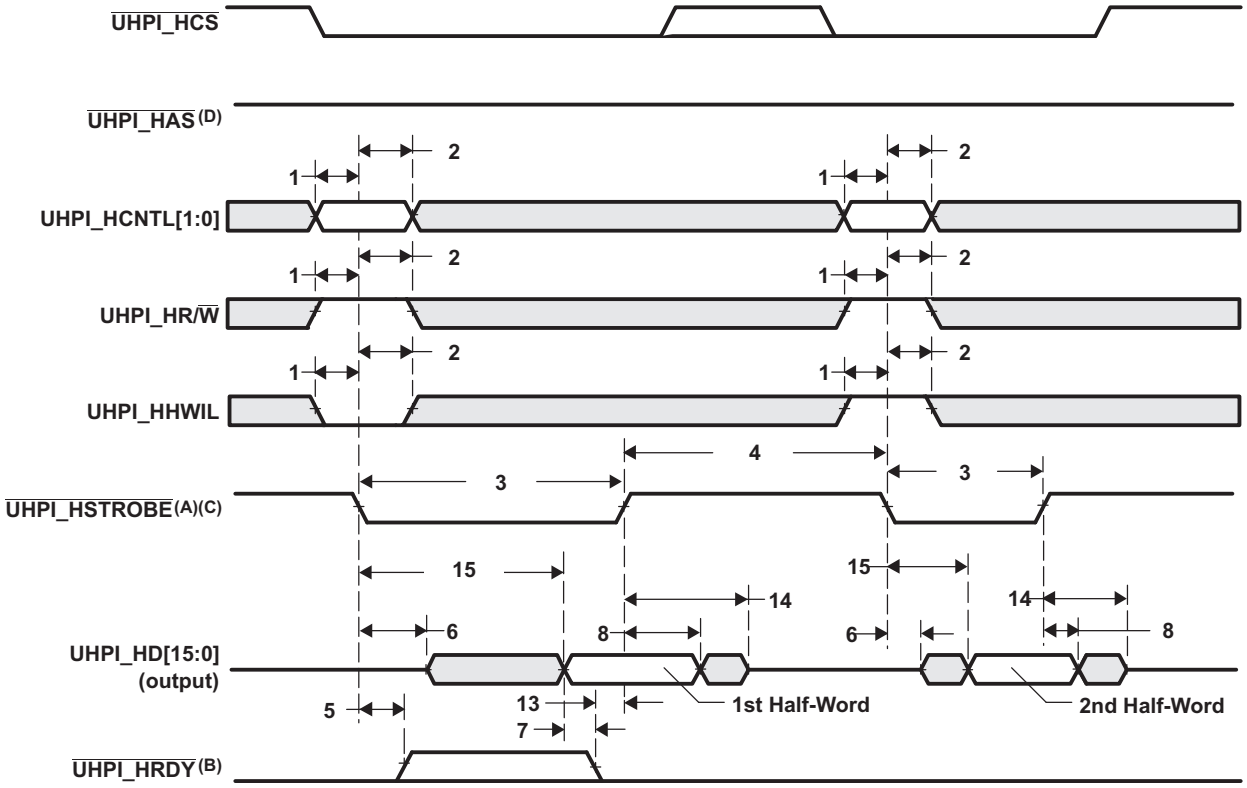

A. UHPI_HSTROBE refers to the following logical operation on UHPI_HCS, UHPI_HDS1, and UHPI_HDS2: [NOT(UHPI_HDS1 XOR UHPI_HDS2)] OR UHPI_HCS.

B. Depending on the type of write or read operation (HPID without auto-incrementing; HPIA, HPIC, or HPID with auto-incrementing) and the state of the FIFO, transitions on UHPI_HRDY may or may not occur.

C. UHPI_HCS reflects typical UHPI_HCS behavior when UHPI_HSTROBE assertion is caused by UHPI_HDS1 or UHPI_HDS2. UHPI_HCS timing requirements are reflected by parameters for UHPI_HSTROBE.

D. The diagram above assumes UHPI_HAS has been pulled high.

Figure 6-67. UHPI Read Timing (UHPI_HAS Not Used, Tied High)

Copyright © 2008–2014, Texas Instruments Incorporated

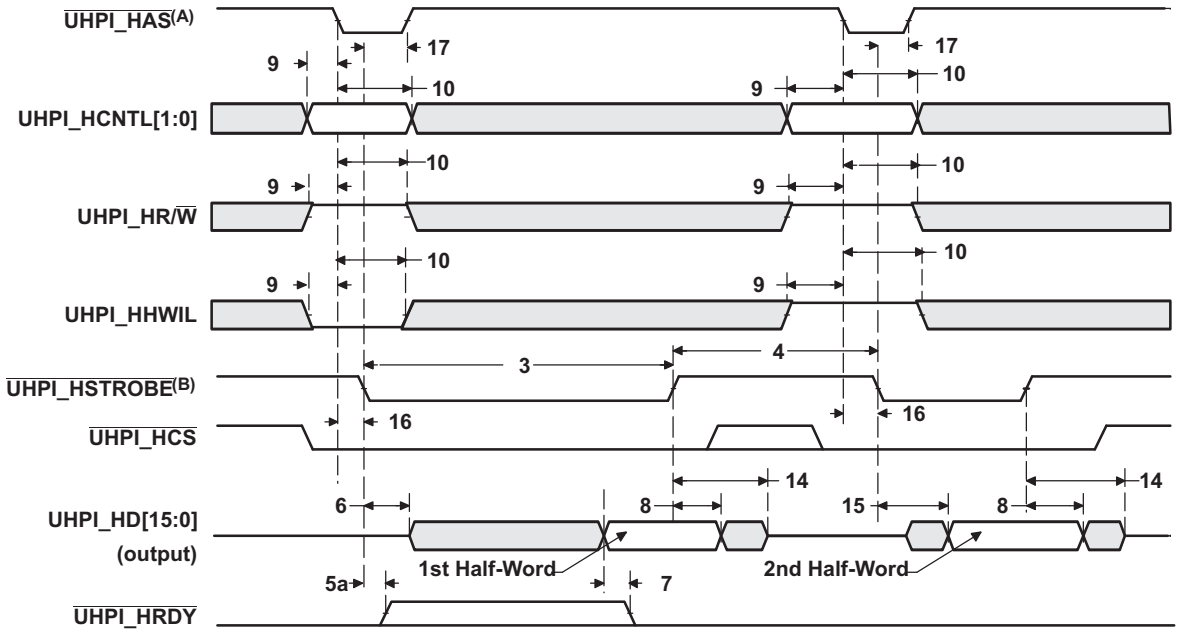

A. For correct operation, strobe the UHPI_HAS signal only once per UHPI_HSTROBE active cycle.

B. UHPI_HSTROBE refers to the following logical operation on UHPI_HCS, UHPI_HDS1, and UHPI_HDS2: [NOT(UHPI_HDS1 XOR UHPI_HDS2)] OR UHPI_HCS.

Figure 6-68. UHPI Read Timing (UHPI_HAS Used)

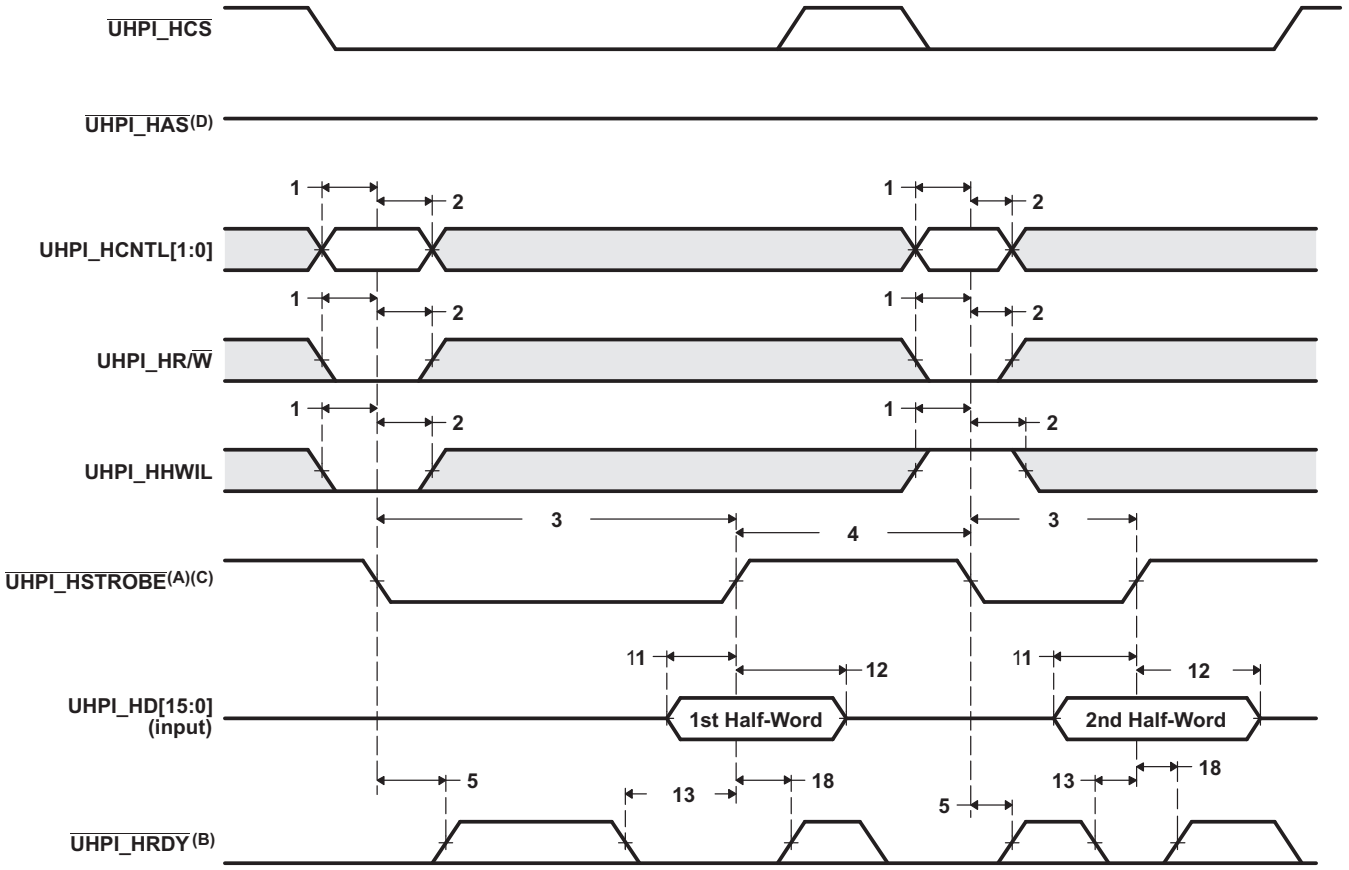

A. UHPI_HSTROBE refers to the following logical operation on UHPI_HCS, UHPI_HDS1, and UHPI_HDS2: [NOT(UHPI_HDS1 XOR UHPI_HDS2)] OR UHPI_HCS.

B. Depending on the type of write or read operation (HPID without auto-incrementing; HPIA, HPIC, or HPID with auto-incrementing) and the state of the FIFO, transitions on UHPI_HRDY may or may not occur.

C. UHPI_HCS reflects typical UHPI_HCS behavior when UHPI_HSTROBE assertion is caused by UHPI_HDS1 or UHPI_HDS2. UHPI_HCS timing requirements are reflected by parameters for UHPI_HSTROBE.

D. he diagram above assumes UHPI_HAS has been pulled high.

Figure 6-69. UHPI Write Timing (UHPI_HAS Not Used, Tied High)

Copyright © 2008–2014, Texas Instruments Incorporated

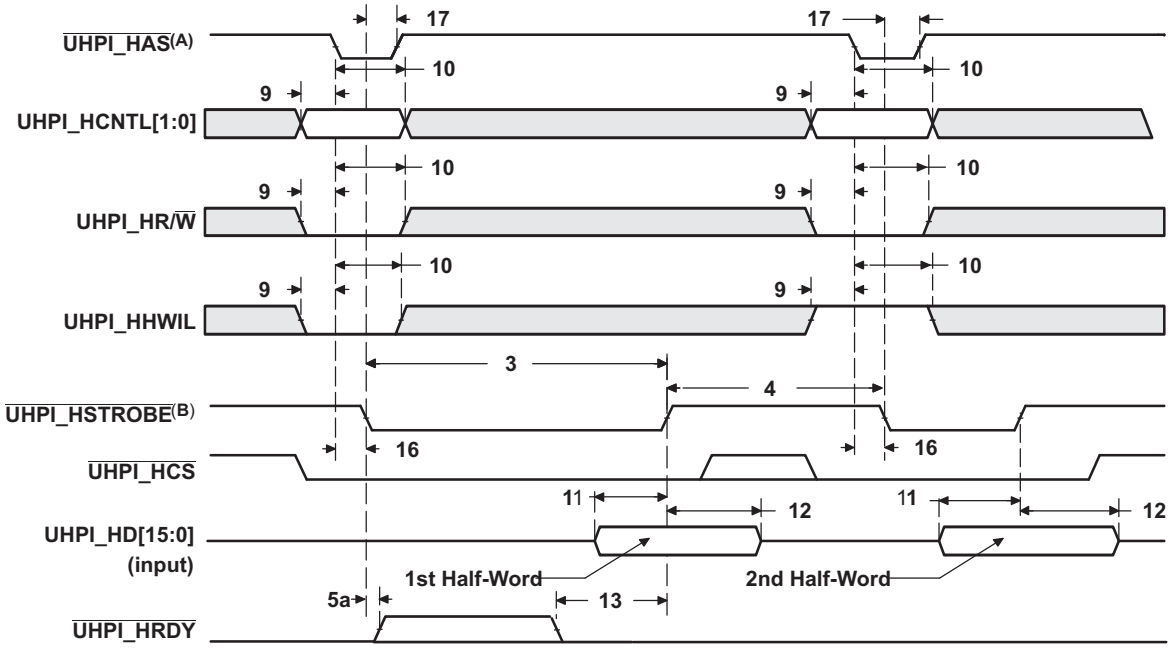

A. For correct operation, strobe the UHPI_HAS signal only once per UHPI_HSTROBE active cycle.
B. UHPI_HSTROBE refers to the following logical operation on UHPI_HCS, UHPI_HDS1, and UHPI_HDS2: [NOT(UHPI_HDS1 XOR UHPI_HDS2)] OR UHPI_HCS.

Figure 6-70. UHPI Write Timing (UHPI_HAS Used)

6.28 Power and Sleep Controller (PSC)

The Power and Sleep Controllers (PSC) are responsible for managing transitions of system power on/off, clock on/off, resets (device level and module level). It is used primarily to provide granular power control for on chip modules (peripherals and CPU). A PSC module consists of a Global PSC (GPSC) and a set of Local PSCs (LPSCs). The GPSC contains memory mapped registers, PSC interrupts, a state machine for each peripheral/module it controls. An LPSC is associated with every module that is controlled by the PSC and provides clock and reset control.

The PSC includes the following features:

- Provides a software interface to:
  - Control module clock enable/disable
  - Control module reset
  - Control CPU local reset
- Supports ICEpick TAP Router power, clock and reset features. For details on ICEpick features see http://tiexpressdsp.com/wiki/index.php?title=ICEPICK.

Table 6-101. Power and Sleep Controller (PSC) Registers

PSC0 BYTE ADDRESS	PSC1 BYTE ADDRESS	ACRONYM	REGISTER DESCRIPTION
0x01C1 0000	0x01E2 7000	REVID	Peripheral Revision and Class Information Register
0x01C1 0018	0x01E2 7018	INTEVAL	Interrupt Evaluation Register
0x01C1 0040	0x01E2 7040	MERRPR0	Module Error Pending Register 0 (module 0-15) (PSC0) Module Error Pending Register 0 (module 0-31) (PSC1)
0x01C1 0050	0x01E2 7050	MERRCR0	Module Error Clear Register 0 (module 0-15) (PSC0) Module Error Clear Register 0 (module 0-31) (PSC1)
0x01C1 0060	0x01E2 7060	PERRPR	Power Error Pending Register
0x01C1 0068	0x01E2 7068	PERRCR	Power Error Clear Register
0x01C1 0120	0x01E2 7120	PTCMD	Power Domain Transition Command Register
0x01C1 0128	0x01E2 7128	PTSTAT	Power Domain Transition Status Register
0x01C1 0200	0x01E2 7200	PDSTAT0	Power Domain 0 Status Register
0x01C1 0204	0x01E2 7204	PDSTAT1	Power Domain 1 Status Register
0x01C1 0300	0x01E2 7300	PDCTL0	Power Domain 0 Control Register
0x01C1 0304	0x01E2 7304	PDCTL1	Power Domain 1 Control Register
0x01C1 0400	0x01E2 7400	PDCFG0	Power Domain 0 Configuration Register
0x01C1 0404	0x01E2 7404	PDCFG1	Power Domain 1 Configuration Register
0x01C1 0800 - 0x01C1 083C	0x01E2 7800 - 0x01E2 787C	MDSTAT0-MDSTAT15	Module Status *n* Register (modules 0-15) (PSC0)
		MDSTAT0-MDSTAT31	Module Status *n* Register (modules 0-31) (PSC1)
0x01C1 0A00 - 0x01C1 0A3C	0x01E2 7A00 - 0x01E2 7A7C	MDCTL0-MDCTL15	Module Control *n* Register (modules 0-15) (PSC0)
		MDCTL0-MDCTL31	Module Control *n* Register (modules 0-31) (PSC1)

6.28.1 Power Domain and Module Topology

The device includes two PSC modules.

Each PSC module controls clock states for several of the on chip modules, controllers and interconnect components. Table 6-102 and Table 6-103 lists the set of peripherals/modules that are controlled by the PSC, the power domain they are associated with, the LPSC assignment and the default (power-on reset) module states. The module states and terminology are defined in Section 6.28.1.2.

Copyright © 2008–2014, Texas Instruments Incorporated

Table 6-102. PSC0 Default Module Configuration

LPSC Number	Module Name	Power Domain	Default Module State	Auto Sleep/Wake Only
0	EDMA3 Channel Controller	AlwaysON (PD0)	SwRstDisable	—
1	EDMA3 Transfer Controller 0	AlwaysON (PD0)	SwRstDisable	—
2	EDMA3 Transfer Controller 1	AlwaysON (PD0)	SwRstDisable	—
3	EMIFA (BR7)	AlwaysON (PD0)	SwRstDisable	—
4	SPI 0	AlwaysON (PD0)	SwRstDisable	—
5	MMC/SD 0	AlwaysON (PD0)	SwRstDisable	—
6-8	Not Used	—	—	—
9	UART 0	AlwaysON (PD0)	SwRstDisable	—
10	SCR0 (Br 0, Br 1, Br 2, Br 8)	AlwaysON (PD0)	Enable	Yes
11	SCR1 (Br 4)	AlwaysON (PD0)	Enable	Yes
12	SCR2 (Br 3, Br 5, Br 6)	AlwaysON (PD0)	Enable	Yes
13	PRUSS	AlwaysON (PD0)	SwRstDisable	—
14	Not Used	—	—	—
15	DSP	PD_DSP (PD1)	Enable	—

Table 6-103. PSC1 Default Module Configuration

LPSC Number	Module Name	Power Domain	Default Module State	Auto Sleep/Wake Only
0	Not Used	—	—	—
1	USB0 (USB2.0)	AlwaysON (PD0)	SwRstDisable	—
2	USB1 (USB1.1)	AlwaysON (PD0)	SwRstDisable	—
3	GPIO	AlwaysON (PD0)	SwRstDisable	—
4	UHPI	AlwaysON (PD0)	SwRstDisable	—
5	EMAC	AlwaysON (PD0)	SwRstDisable	—
6	EMIFB (Br 20)	AlwaysON (PD0)	SwRstDisable	—
7	McASP0 (+ McASP0 FIFO)	AlwaysON (PD0)	SwRstDisable	—
8	McASP1 (+ McASP1 FIFO)	AlwaysON (PD0)	SwRstDisable	—
9	McASP2(+ McASP2 FIFO)	AlwaysON (PD0)	SwRstDisable	—
10	SPI 1	AlwaysON (PD0)	SwRstDisable	—
11	I2C 1	AlwaysON (PD0)	SwRstDisable	—
12	UART 1	AlwaysON (PD0)	SwRstDisable	—
13	UART 2	AlwaysON (PD0)	SwRstDisable	—
14-15	Not Used	—	—	—
16	LCDC	AlwaysON (PD0)	SwRstDisable	—
17	eHRPWM0/1/2	AlwaysON (PD0)	SwRstDisable	—
18-19	Not Used	—	—	—
20	ECAP0/1/2	AlwaysON (PD0)	SwRstDisable	—
21	EQEP0/1	AlwaysON (PD0)	SwRstDisable	—
22-23	Not Used	—	—	—
24	SCR8 (Br 15)	AlwaysON (PD0)	Enable	Yes
25	SCR7 (Br 12)	AlwaysON (PD0)	Enable	Yes
26	SCR12 (Br 18)	AlwaysON (PD0)	Enable	Yes
27-30	Not Used	—	—	—
31	Shared RAM (Br 13)	PD_SHRAM	Enable	Yes

Copyright © 2008–2014, Texas Instruments Incorporated

6.28.1.1 Power Domain States

A power domain can only be in one of the two states: ON or OFF, defined as follows:

- ON: power to the domain is on
- OFF: power to the domain is off

In the device, for both PSC0 and PSC1, the Always ON domain, or PD0 power domain, is always in the ON state when the chip is powered-on. This domain is not programmable to OFF state.

- On PSC0 PD1/PD_DSP Domain: Controls the sleep state for DSP L1 and L2 Memories
- On PSC1 PD1/PD_SHRAM Domain: Controls the sleep state for the 128K Shared RAM

6.28.1.2 Module States

The PSC defines several possible states for a module. This states are essentially a combination of the module reset asserted or de-asserted and module clock on/enabled or off/disabled. The module states are defined in Table 6-104.

Table 6-104. Module States

Module State	Module Reset	Module Clock	Module State Definition
Enable	De-asserted	On	A module in the enable state has its module reset de-asserted and it has its clock on. This is the normal operational state for a given module
Disable	De-asserted	Off	A module in the disabled state has its module reset de-asserted and it has its module clock off. This state is typically used for disabling a module clock to save power. The device is designed in full static CMOS, so when you stop a module clock, it retains the module's state. When the clock is restarted, the module resumes operating from the stopping point.
SyncReset	Asserted	On	A module state in the SyncReset state has its module reset asserted and it has its clock on. Generally, software is not expected to initiate this state
SwRstDisable	Asserted	Off	A module in the SwResetDisable state has its module reset asserted and it has its clock disabled. After initial power-on, several modules come up in the SwRstDisable state. Generally, software is not expected to initiate this state
Auto Sleep	De-asserted	Off	A module in the Auto Sleep state also has its module reset de-asserted and its module clock disabled, similar to the Disable state. However this is a special state, once a module is configured in this state by software, it can "automatically" transition to "Enable" state whenever there is an internal read/write request made to it, and after servicing the request it will "automatically" transition into the sleep state (with module reset re de-asserted and module clock disabled), without any software intervention. The transition from sleep to enabled and back to sleep state has some cycle latency associated with it. It is not envisioned to use this mode when peripherals are fully operational and moving data.
Auto Wake	De-asserted	Off	A module in the Auto Wake state also has its module reset de-asserted and its module clock disabled, similar to the Disable state. However this is a special state, once a module is configured in this state by software, it will "automatically" transition to "Enable" state whenever there is an internal read/write request made to it, and will remain in the "Enabled" state from then on (with module reset re de-asserted and module clock on), without any software intervention. The transition from sleep to enabled state has some cycle latency associated with it. It is not envisioned to use this mode when peripherals are fully operational and moving data.

Copyright © 2008–2014, Texas Instruments Incorporated

6.29 Programmable Real-Time Unit Subsystem (PRUSS)

The Programmable Real-Time Unit Subsystem (PRUSS) consists of

- Two Programmable Real-Time Units (PRU0 and PRU1) and their associated memories
- An Interrupt Controller (INTC) for handling system interrupt events. The INTC also supports posting events back to the device level host CPU.
- A Switched Central Resource (SCR) for connecting the various internal and external masters to the resources inside the PRUSS.

The two PRUs can operate completely independently or in coordination with each other. The PRUs can also work in coordination with the device level host CPU. This is determined by the nature of the program which is loaded into the PRUs instruction memory. Several different signaling mechanisms are available between the two PRUs and the device level host CPU.

The PRUs are optimized for performing embedded tasks that require manipulation of packed memory mapped data structures, handling of system events that have tight realtime constraints and interfacing with systems external to the device.

The PRUSS comprises various distinct addressable regions. Externally the subsystem presents a single 64Kbyte range of addresses. The internal interconnect bus (also called switched central resource, or SCR) of the PRUSS decodes accesses for each of the individual regions. The PRUSS memory map is documented in Table 6-105 and in Table 6-106. Note that these two memory maps are implemented inside the PRUSS and are local to the components of the PRUSS.

Table 6-105. Programmable Real-Time Unit Subsystem (PRUSS) Local Instruction Space Memory Map

BYTE ADDRESS	PRU0	PRU1
0x0000 0000 - 0x0000 0FFF	PRU0 Instruction RAM	PRU1 Instruction RAM

Table 6-106. Programmable Real-Time Unit Subsystem (PRUSS) Local Data Space Memory Map

BYTE ADDRESS	PRU0	PRU1
0x0000 0000 - 0x0000 01FF	Data RAM 0 (1)	Data RAM 1 (1)
0x0000 0200 - 0x0000 1FFF	Reserved	Reserved
0x0000 2000 - 0x0000 21FF	Data RAM 1 (1)	Data RAM 0 (1)
0x0000 2200 - 0x0000 3FFF	Reserved	Reserved
0x0000 4000 - 0x0000 6FFF	INTC Registers	INTC Registers
0x0000 7000 - 0x0000 73FF	PRU0 Control Registers	PRU0 Control Registers
0x0000 7400 - 0x0000 77FF	Reserved	Reserved
0x0000 7800 - 0x0000 7BFF	PRU1 Control Registers	PRU1 Control Registers
0x0000 7C00 - 0xFFFF FFFF	Reserved	Reserved

(1) Note that PRU0 accesses Data RAM**0** at address 0x0000 0000, also PRU1 accesses Data RAM**1** at address 0x0000 0000. Data RAM0 is intended to be the primary data memory for PRU0 and Data RAM1 is intended to be the primary data memory for PRU1. However for passing information between PRUs, each PRU can access the data ram of the 'other' PRU through address 0x0000 2000.

The global view of the PRUSS internal memories and control ports is documented in Table 6-107. The offset addresses of each region are implemented inside the PRUSS but the global device memory mapping places the PRUSS slave port in the address range 0x01C3 0000-0x01C3 FFFF. The PRU0 and PRU1 can use either the local or global addresses to access their internal memories, but using the local addresses will provide access time several cycles faster than using the global addresses. This is because when accessing via the global address the access needs to be routed through the switch fabric outside PRUSS and back in through the PRUSS slave port.

Copyright © 2008–2014, Texas Instruments Incorporated

Table 6-107. Programmable Real-Time Unit Subsystem (PRUSS) Global Memory Map

BYTE ADDRESS	REGION
0x01C3 0000 - 0x01C3 01FF	Data RAM 0
0x01C3 0200 - 0x01C3 1FFF	Reserved
0x01C3 2000 - 0x01C3 21FF	Data RAM 1
0x01C3 2200 - 0x01C3 3FFF	Reserved
0x01C3 4000 - 0x01C3 6FFF	INTC Registers
0x01C3 7000 - 0x01C3 73FF	PRU0 Control Registers
0x01C3 7400 - 0x01C3 77FF	PRU0 Debug Registers
0x01C3 7800 - 0x01C3 7BFF	PRU1 Control Registers
0x01C3 7C00 - 0x01C3 7FFF	PRU1 Debug Registers
0x01C3 8000 - 0x01C3 8FFF	PRU0 Instruction RAM
0x01C3 9000 - 0x01C3 BFFF	Reserved
0x01C3 C000 - 0x01C3 CFFF	PRU1 Instruction RAM
0x01C3 D000 - 0x01C3 FFFF	Reserved

Each of the PRUs can access the rest of the device memory (including memory mapped peripheral and configuration registers) using the global memory space addresses.

6.29.1 PRUSS Register Descriptions

Table 6-108. Programmable Real-Time Unit Subsystem (PRUSS) Control / Status Registers

PRU0 BYTE ADDRESS	PRU1 BYTE ADDRESS	ACRONYM	REGISTER DESCRIPTION
0x01C3 7000	0x01C3 7800	CONTROL	PRU Control Register
0x01C3 7004	0x01C3 7804	STATUS	PRU Status Register
0x01C3 7008	0x01C3 7808	WAKEUP	PRU Wakeup Enable Register
0x01C3 700C	0x01C3 780C	CYCLCNT	PRU Cycle Count
0x01C3 7010	0x01C3 7810	STALLCNT	PRU Stall Count
0x01C3 7020	0x01C3 7820	CONTABBLKIDX0	PRU Constant Table Block Index Register 0
0x01C3 7028	0x01C3 7828	CONTABPROPTR0	PRU Constant Table Programmable Pointer Register 0
0x01C3 702C	0x01C3 782C	CONTABPROPTR1	PRU Constant Table Programmable Pointer Register 1
0x01C37400 - 0x01C3747C	0x01C3 7C00 - 0x01C3 7C7C	INTGPR0 – INTGPR31	PRU Internal General Purpose Register 0 (for Debug)
0x01C37480 - 0x01C374FC	0x01C3 7C80 - 0x01C3 7CFC	INTCTER0 – INTCTER31	PRU Internal General Purpose Register 0 (for Debug)

Table 6-109. Programmable Real-Time Unit Subsystem Interrupt Controller (PRUSS INTC) Registers

BYTE ADDRESS	ACRONYM	REGISTER DESCRIPTION
0x01C3 4000	REVID	Revision ID Register
0x01C3 4004	CONTROL	Control Register
0x01C3 4010	GLBLEN	Global Enable Register
0x01C3 401C	GLBLNSTLVL	Global Nesting Level Register
0x01C3 4020	STATIDXSET	System Interrupt Status Indexed Set Register
0x01C3 4024	STATIDXCLR	System Interrupt Status Indexed Clear Register
0x01C3 4028	ENIDXSET	System Interrupt Enable Indexed Set Register
0x01C3 402C	ENIDXCLR	System Interrupt Enable Indexed Clear Register
0x01C3 4034	HSTINTENIDXSET	Host Interrupt Enable Indexed Set Register
0x01C3 4038	HSTINTENIDXCLR	Host Interrupt Enable Indexed Clear Register

Copyright © 2008–2014, Texas Instruments Incorporated

Table 6-109. Programmable Real-Time Unit Subsystem Interrupt Controller (PRUSS INTC) Registers (continued)

BYTE ADDRESS	ACRONYM	REGISTER DESCRIPTION
0x01C3 4080	GLBLPRIIDX	Global Prioritized Index Register
0x01C3 4200	STATSETINT0	System Interrupt Status Raw/Set Register 0
0x01C3 4204	STATSETINT1	System Interrupt Status Raw/Set Register 1
0x01C3 4280	STATCLRINT0	System Interrupt Status Enabled/Clear Register 0
0x01C3 4284	STATCLRINT1	System Interrupt Status Enabled/Clear Register 1
0x01C3 4300	ENABLESET0	System Interrupt Enable Set Register 0
0x01C3 4304	ENABLESET1	System Interrupt Enable Set Register 1
0x01C3 4380	ENABLECLR0	System Interrupt Enable Clear Register 0
0x01C3 4384	ENABLECLR1	System Interrupt Enable Clear Register 1
0x01C3 4400 - 0x01C3 4440	CHANMAP0 - CHANMAP15	Channel Map Registers 0-15
0x01C3 4800 - 0x01C3 4808	HOSTMAP0 - HOSTMAP2	Host Map Register 0-2
0x01C3 4900 - 0x01C3 4928	HOSTINTPRIIDX0 - HOSTINTPRIIDX9	Host Interrupt Prioritized Index Registers 0-9
0x01C3 4D00	POLARITY0	System Interrupt Polarity Register 0
0x01C3 4D04	POLARITY1	System Interrupt Polarity Register 1
0x01C3 4D80	TYPE0	System Interrupt Type Register 0
0x01C3 4D84	TYPE1	System Interrupt Type Register 1
0x01C3 5100 - 0x01C3 5128	HOSTINTNSTLVL0- HOSTINTNSTLVL9	Host Interrupt Nesting Level Registers 0-9
0x01C3 5500	HOSTINTEN	Host Interrupt Enable Register

Copyright © 2008–2014, Texas Instruments Incorporated

6.30 Emulation Logic

This section describes the steps to use a third party debugger. The debug capabilities and features for DSP are as shown below.

For TI's latest debug and emulation information see :

http://tiexpressdsp.com/wiki/index.php?title=Category:Emulation

DSP:

- Basic Debug
  - Execution Control
  - System Visibility
- Real-Time Debug
  - Interrupts serviced while halted
  - Low/non-intrusive system visibility while running
- Advanced Debug
  - Global Start
  - Global Stop
  - Specify targeted memory level(s) during memory accesses
  - HSRTDX (High Speed Real Time Data eXchange)
- Advanced System Control
  - Subsystem reset via debug
  - Peripheral notification of debug events
  - Cache-coherent debug accesses
- Analysis Actions
  - Stop program execution
  - Generate debug interrupt
  - Benchmarking with counters
  - External trigger generation
  - Debug state machine state transition
  - Combinational and Sequential event generation
- Analysis Events
  - Program event detection
  - Data event detection
  - External trigger Detection
  - System event detection (i.e. cache miss)
  - Debug state machine state detection
- Analysis Configuration
  - Application access
  - Debugger access

Copyright © 2008–2014, Texas Instruments Incorporated

Table 6-110. DSP Debug Features

Category	Hardware Feature	Availability
Basic Debug	Software breakpoint	Unlimited
	Hardware breakpoint	Up to 10 HWBPs, including: 4 precise(1) HWBPs inside DSP core and one of them is associated with a counter. 2 imprecise(1) HWBPs from AET. 4 imprecise(1) HWBPs from AET which are shared for watch point.
Analysis	Watch point	Up to 4 watch points, which are shared with HWBPs, and can also be used as 2 watch points with data (32 bits)
	Watch point with Data	Up to 2, Which can also be used as 4 watch points.
	Counters/timers	1x64-bits (cycle only) + 2x32-bits (watermark counters)
	External Event Trigger In	1
	External Event Trigger Out	1

(1) Precise hardware breakpoints will halt the processor immediately prior to the execution of the selected instruction. Imprecise breakpoints will halt the processor some number of cycles after the selected instruction depending on device conditions.

6.30.1 JTAG Port Description

The device target debug interface uses the five standard IEEE 1149.1(JTAG) signals ($\overline{\text{TRST}}$, TCK, TMS, TDI, and TDO).

TRST holds the debug and boundary scan logic in reset (normal DSP operation) when pulled low (its default state). Since TRST has an internal pull-down resistor, this ensures that at power up the device functions in its normal (non-test) operation mode if TRST is not connected. Otherwise, TRST should be driven inactive by the emulator or boundary scan controller. Boundary scan test cannot be performed while the TRST pin is pulled low.

Table 6-111. JTAG Port Description

PIN	TYPE	NAME	DESCRIPTION
$\overline{\text{TRST}}$	I	Test Logic Reset	When asserted (active low) causes all test and debug logic in the device to be reset along with the IEEE 1149.1 interface
TCK	I	Test Clock	This is the test clock used to drive an IEEE 1149.1 TAP state machine and logic.
TMS	I	Test Mode Select	Directs the next state of the IEEE 1149.1 test access port state machine
TDI	I	Test Data Input	Scan data input to the device
TDO	O	Test Data Output	Scan data output of the device
EMU[0]	I/O	Emulation 0	Channel 0 trigger + HSRTDX

6.30.2 Scan Chain Configuration Parameters

Table 6-112 shows the TAP configuration details required to configure the router/emulator for this device.

Table 6-112. JTAG Port Description

Router Port ID	Default TAP	TAP Name	Tap IR Length
17	No	C674x	38

The router is ICEpick revision C and has a 6-bit IR length.

Copyright © 2008–2014, Texas Instruments Incorporated

6.30.3 JTAG 1149.1 Boundary Scan Considerations

To use boundary scan, the following sequence should be followed:

- Execute a valid reset sequence and exit reset
- Wait at least 6000 OSCIN clock cycles
- Enter boundary scan mode using the JTAG pins

No specific value is required on the EMU[0] pin for boundary scan testing. If TRST is not driven by the boundary scan tool or tester, TRST should be externally pulled high during boundary scan testing.

Copyright © 2008–2014, Texas Instruments Incorporated

6.31 IEEE 1149.1 JTAG

The JTAG (1) interface is used for BSDL testing and emulation of the device.

The device requires that both TRST and RESET be asserted upon power up to be properly initialized. While RESET initializes the device, TRST initializes the device's emulation logic. Both resets are required for proper operation.

While both TRST and RESET need to be asserted upon power up, only RESET needs to be released for the device to boot properly. TRST may be asserted indefinitely for normal operation, keeping the JTAG port interface and device's emulation logic in the reset state.

TRST only needs to be released when it is necessary to use a JTAG controller to debug the device or exercise the device's boundary scan functionality. Note: TRST is synchronous and ***must*** be clocked by TCK; otherwise, the boundary scan logic may not respond as expected after TRST is asserted.

RESET must be released only in order for boundary-scan JTAG to read the variant field of IDCODE correctly. Other boundary-scan instructions work correctly independent of current state of RESET.

For maximum reliability, the device includes an internal pulldown (IPD) on the TRST pin to ensure that TRST will always be asserted upon power up and the device's internal emulation logic will always be properly initialized.

JTAG controllers from Texas Instruments actively drive TRST high. However, some third-party JTAG controllers may not drive TRST high but expect the use of a pullup resistor on TRST.

When using this type of JTAG controller, assert TRST to initialize the device after powerup and externally drive TRST high before attempting any emulation or boundary scan operations.

6.31.1 JTAG Peripheral Register Description(s) – JTAG ID Register (DEVIDR0)

Table 6-113. DEVIDR0 Register

BYTE ADDRESS	ACRONYM	REGISTER DESCRIPTION	COMMENTS
0x01C1 4018	DEVIDR0	JTAG Identification Register	Read-only. Provides 32-bit JTAG ID of the device.

(1) IEEE Standard 1149.1-1990 Standard-Test-Access Port and Boundary Scan Architecture.

The JTAG ID register is a read-only register that identifies to the customer the JTAG/Device ID. For the device, the JTAG ID register resides at address location 0x01C1 4018. The register hex value for each silicon revision is:

- 0x0B7D F02F for silicon revision 1.0
- 0x8B7D F02F for silicon revision 1.1
- 0x9B7D F02F for silicon revisions 3.0, 2.1, and 2.0

For the actual register bit names and their associated bit field descriptions, see Figure 6-71 and Table 6-114.

Figure 6-71. JTAG ID (DEVIDR0) Register Description - Register Value

31 28	27 12	11 1	0
VARIANT (4-bit)	PART NUMBER (16-bit)	MANUFACTURER (11-bit)	LSB
R-xxxx	R-1011 1001 0110 1011	R-0000 0010 111	R-1

LEGEND: R = Read, W = Write, n = value at reset

Table 6-114. JTAG ID Register Selection Bit Descriptions

BIT	NAME	DESCRIPTION
31:28	VARIANT	Variant (4-Bit) value
27:12	PART NUMBER	Part Number (16-Bit) value
11-1	MANUFACTURER	Manufacturer (11-Bit) value
0	LSB	LSB. This bit is read as a "1".

6.31.2 JTAG Test-Port Electrical Data/Timing

Table 6-115. Timing Requirements for JTAG Test Port (see Figure 6-72)

No.	PARAMETER		MIN	MAX	UNIT
1	$t_{c(TCK)}$	Cycle time, TCK	40		ns
2	$t_{w(TCKH)}$	Pulse duration, TCK high	16		ns
3	$t_{w(TCKL)}$	Pulse duration, TCK low	16		ns
4	$t_{su(TDIV-TCKH)}$	Setup time, TDI/TMS/$\overline{TRST}$ valid before TCK high	4		ns
5	$t_{h(TCLKH-TDIV)}$	Hold time, TDI/TMS/$\overline{TRST}$ valid after TCK high	4		ns

Table 6-116. Switching Characteristics Over Recommended Operating Conditions for JTAG Test Port (see Figure 6-72)

No.	PARAMETER		MIN	MAX	UNIT
6	$t_{d(TCKL-TDOV)}$	Delay time, TCK low to TDO valid		15	ns

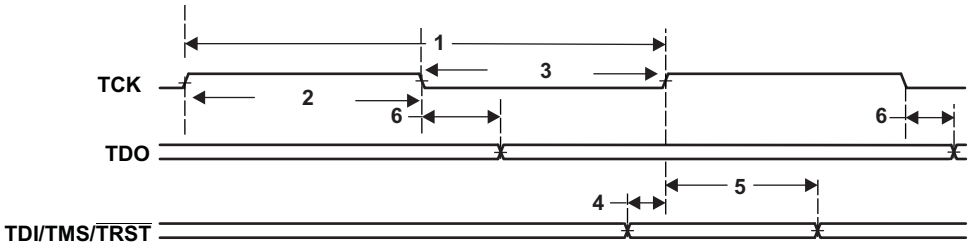

Figure 6-72. JTAG Test-Port Timing

Copyright © 2008–2014, Texas Instruments Incorporated

6.32 Real Time Clock (RTC)

The RTC provides a time reference to an application running on the device. The current date and time is tracked in a set of counter registers that update once per second. The time can be represented in 12-hour or 24-hour mode. The calendar and time registers are buffered during reads and writes so that updates do not interfere with the accuracy of the time and date.

Alarms are available to interrupt the CPU at a particular time, or at periodic time intervals, such as once per minute or once per day. In addition, the RTC can interrupt the CPU every time the calendar and time registers are updated, or at programmable periodic intervals.

The real-time clock (RTC) provides the following features:

- 100-year calendar (xx00 to xx99)
- Counts seconds, minutes, hours, day of the week, date, month, and year with leap year compensation
- Binary-coded-decimal (BCD) representation of time, calendar, and alarm
- 12-hour clock mode (with AM and PM) or 24-hour clock mode
- Alarm interrupt
- Periodic interrupt
- Single interrupt to the CPU
- Supports external 32.768-kHz crystal or external clock source of the same frequency
- Separate isolated power supply

Figure 6-73 shows a block diagram of the RTC.

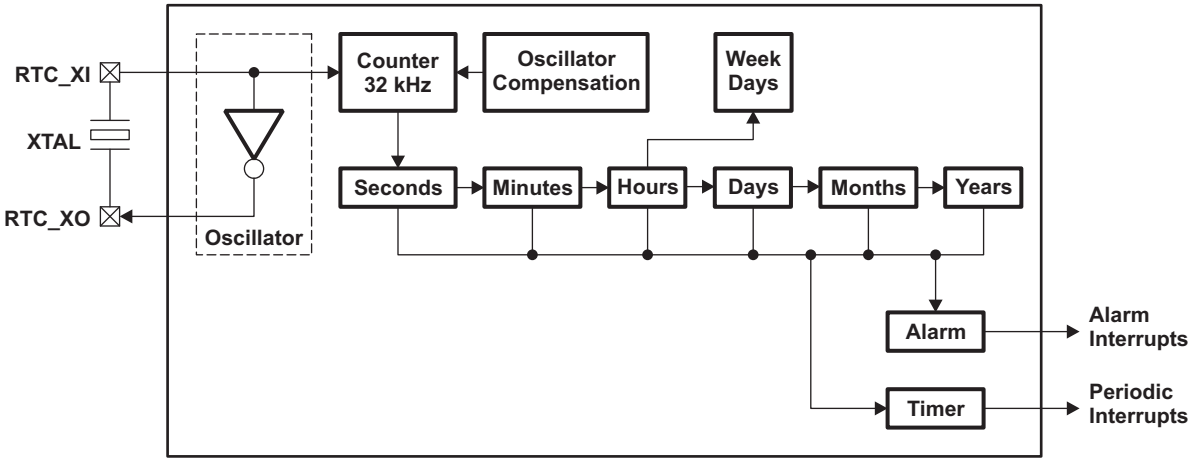

Figure 6-73. Real-Time Clock Block Diagram

6.32.1 Clock Source

The clock reference for the RTC is an external 32.768-kHz crystal or an external clock source of the same frequency. The RTC also has a separate power supply that is isolated from the rest of the system. When the CPU and other peripherals are without power, the RTC can remain powered to preserve the current time and calendar information.

The source for the RTC reference clock may be provided by a crystal or by an external clock source. The RTC has an internal oscillator buffer to support direct operation with a crystal. The crystal is connected between pins RTC_XI and RTC_XO. RTC_XI is the input to the on-chip oscillator and RTC_XO is the output from the oscillator back to the crystal. A crystal with 70k-ohm max ESR is recommended. Typical load capacitance values are 10-20 pF, where the load capacitance is the series combination of C1 and C2.

An external 32.768-kHz clock source may be used instead of a crystal. In such a case, the clock source is connected to RTC_XI, and RTC_XO is left unconnected.

If the RTC is not used, the RTC_XI pin should be static held high or low and RTC_XO should be left unconnected.

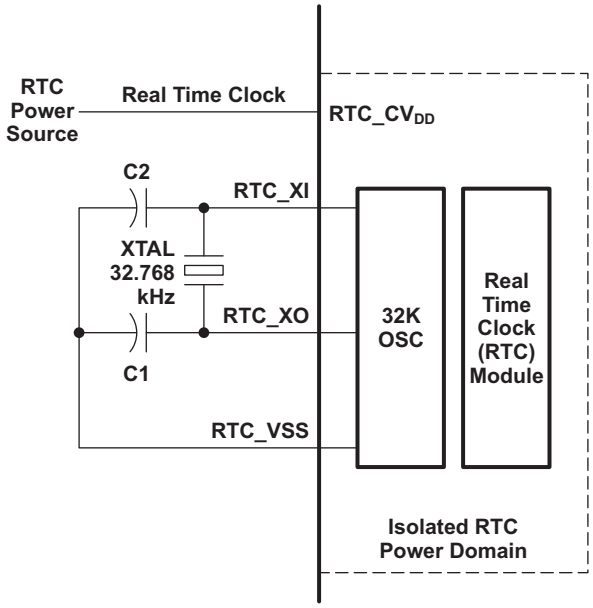

Figure 6-74. Clock Source

Copyright © 2008–2014, Texas Instruments Incorporated

6.32.2 Real-Time Clock Registers

Table 6-117 lists the memory-mapped registers for the RTC.

Table 6-117. Real-Time Clock (RTC) Registers

BYTE ADDRESS	ACRONYM	REGISTER DESCRIPTION
0x01C2 3000	SECOND	Seconds Register
0x01C2 3004	MINUTE	Minutes Register
0x01C2 3008	HOUR	Hours Register
0x01C2 300C	DAY	Day of the Month Register
0x01C2 3010	MONTH	Month Register
0x01C2 3014	YEAR	Year Register
0x01C2 3018	DOTW	Day of the Week Register
0x01C2 3020	ALARMSECOND	Alarm Seconds Register
0x01C2 3024	ALARMMINUTE	Alarm Minutes Register
0x01C2 3028	ALARMHOUR	Alarm Hours Register
0x01C2 302C	ALARMDAY	Alarm Days Register
0x01C2 3030	ALARMMONTH	Alarm Months Register
0x01C2 3034	ALARMYEAR	Alarm Years Register
0x01C2 3040	CTRL	Control Register
0x01C2 3044	STATUS	Status Register
0x01C2 3048	INTERRUPT	Interrupt Enable Register
0x01C2 304C	COMPLSB	Compensation (LSB) Register
0x01C2 3050	COMPMSB	Compensation (MSB) Register
0x01C2 3054	OSC	Oscillator Register
0x01C2 3060	SCRATCH0	Scratch 0 (General-Purpose) Register
0x01C2 3064	SCRATCH1	Scratch 1 (General-Purpose) Register
0x01C2 3068	SCRATCH2	Scratch 2 (General-Purpose) Register
0x01C2 306C	KICK0	Kick 0 (Write Protect) Register
0x01C2 3070	KICK1	Kick 1 (Write Protect) Register

Copyright © 2008–2014, Texas Instruments Incorporated

7 Device and Documentation Support

7.1 Device Support

7.1.1 Development Support

TI offers an extensive line of development tools for the TMS320C6745/47 platform, including tools to evaluate the performance of the processors, generate code, develop algorithm implementations, and fully integrate and debug software and hardware modules. The tool's support documentation is electronically available within the Code Composer Studio™ Integrated Development Environment (IDE).

The following products support development of TMS320C6745/47 applications:

Software Development Tools:

Code Composer Studio™ Integrated Development Environment (IDE): including Editor

C/C++/Assembly Code Generation, and Debug plus additional development tools

Scalable, Real-Time Foundation Software (DSP/BIOS™), which provides the basic run-time target software needed to support any application.

Hardware Development Tools:

Extended Development System (XDS™) Emulator

For a complete listing of development-support tools for TMS320C6745/47, visit the Texas Instruments web site on the Worldwide Web at www.ti.com uniform resource locator (URL). For information on pricing and availability, contact the nearest TI field sales office or authorized distributor.

7.1.2 Device and Development-Support Tool Nomenclature

To designate the stages in the product development cycle, TI assigns prefixes to the part numbers of all DSP devices and support tools. Each DSP commercial family member has one of three prefixes: TMX, TMP, or TMS (e.g., TMS320C6745). Texas Instruments recommends two of three possible prefix designators for its support tools: TMDX and TMDS. These prefixes represent evolutionary stages of product development from engineering prototypes (TMX/TMDX) through fully qualified production devices/tools (TMS/TMDS).

Device development evolutionary flow:

TMX Experimental device that is not necessarily representative of the final device's electrical specifications.

TMP Final silicon die that conforms to the device's electrical specifications but has not completed quality and reliability verification.

TMS Fully-qualified production device.

Support tool development evolutionary flow:

TMDX Development-support product that has not yet completed Texas Instruments internal qualification testing.

TMDS Fully qualified development-support product.

TMX and TMP devices and TMDX development-support tools are shipped against the following disclaimer:

"Developmental product is intended for internal evaluation purposes."

TMS devices and TMDS development-support tools have been characterized fully, and the quality and reliability of the device have been demonstrated fully. TI's standard warranty applies.

Copyright © 2008–2014, Texas Instruments Incorporated

Predictions show that prototype devices (TMX or TMP) have a greater failure rate than the standard production devices. Texas Instruments recommends that these devices not be used in any production system because their expected end-use failure rate still is undefined. Only qualified production devices are to be used.

TI nomenclature also includes a suffix with the device family name. This suffix indicates the package type (for example, ZKB), the temperature range (for example, "Blank" is the commercial temperature range), and the device speed range in megahertz (for example, "Blank" is the default).

Figure 7-1 provides a legend for reading the complete device name for any TMS320C674x member.

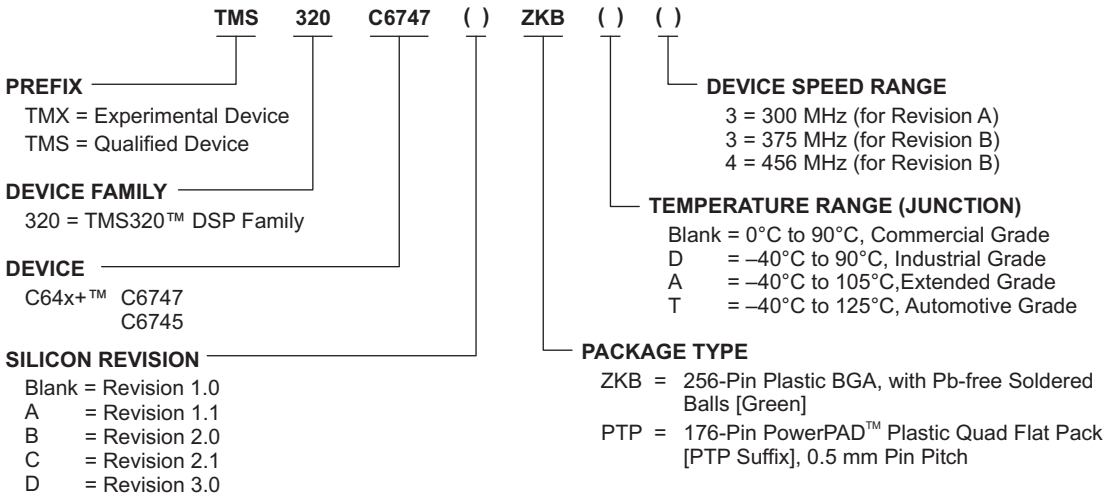

Figure 7-1. Device Nomenclature

7.2 Documentation Support

The following documents describe the TMS320C6745/47 Low-power digital signal processor. Copies of these documents are available on the Internet at www.ti.com. *Tip:* Enter the literature number in the search box provided at www.ti.com.

DSP Reference Guides

SPRUFE8 ***TMS320C674x DSP CPU and Instruction Set Reference Guide.*** Describes the CPU architecture, pipeline, instruction set, and interrupts for the TMS320C674x digital signal processors (DSPs). The C674x DSP is an enhancement of the C64x+ and C67x+ DSPs with added functionality and an expanded instruction set.

SPRUFK5 ***TMS320C674x DSP Megamodule Reference Guide.*** Describes the TMS320C674x digital signal processor (DSP) megamodule. Included is a discussion on the internal direct memory access (IDMA) controller, the interrupt controller, the power-down controller, memory protection, bandwidth management, and the memory and cache.

SPRUH91 ***TMS320C6745/C6747 DSP Technical Reference Manual.*** Describes the System-on-Chip (SoC) and each peripheral in the device.

User's Guides

SPRU186 ***TMS320C6000 Assembly Language Tools User's Guide.***Describes the assembly language tools (assembler, linker, and other tools used to develop assembly language code), assembler directives, macros, common object file format, and symbolic debugging directives for the TMS320C6000 platform of devices (including the C64x+, C67x+, and C674x generations).

SPRU187 ***TMS320C6000 Optimizing Compiler User's Guide.*** Describes the TMS320C6000 C compiler and the assembly optimizer. This C compiler accepts ANSI standard C source code and produces assembly language source code for the TMS320C6000 platform of devices (including the C64x+, C67x+, and C674x generations). The assembly optimizer helps you optimize your assembly code.

SPRUG82 ***TMS320C674x DSP Cache User's Guide.*** Explains the fundamentals of memory caches

Copyright © 2008–2014, Texas Instruments Incorporated

and describes how the two-level cache-based internal memory architecture in the TMS320C674x digital signal processor (DSP) can be efficiently used in DSP applications. Shows how to maintain coherence with external memory, how to use DMA to reduce memory latencies, and how to optimize your code to improve cache efficiency. The internal memory architecture in the C674x DSP is organized in a two-level hierarchy consisting of a dedicated program cache (L1P) and a dedicated data cache (L1D) on the first level. Accesses by the CPU to the these first level caches can complete without CPU pipeline stalls. If the data requested by the CPU is not contained in cache, it is fetched from the next lower memory level, L2 or external memory.

7.3 Support Resources

TI E2E™ support forums are an engineer's go-to source for fast, verified answers and design help — straight from the experts. Search existing answers or ask your own question to get the quick design help you need.

Linked content is provided "AS IS" by the respective contributors. They do not constitute TI specifications and do not necessarily reflect TI's views; see TI's Terms of Use.

7.4 Related Links

The table below lists quick access links. Categories include technical documents, support and community resources, tools and software, and quick access to sample or buy.

Table 7-1. Related Links

PARTS	PRODUCT FOLDER	SAMPLE & BUY	TECHNICAL DOCUMENTS	TOOLS & SOFTWARE	SUPPORT & COMMUNITY
TMS320C6745	Click here	Click here	Click here	Click here	Click here
TMS320C6747	Click here	Click here	Click here	Click here	Click here

7.5 Trademarks

DSP/BIOS, PowerPAD, TMS320C6000, C6000, TI E2E are trademarks of Texas Instruments.
All other trademarks are the property of their respective owners.

7.6 Electrostatic Discharge Caution



This integrated circuit can be damaged by ESD. Texas Instruments recommends that all integrated circuits be handled with appropriate precautions. Failure to observe proper handling and installation procedures can cause damage.

ESD damage can range from subtle performance degradation to complete device failure. Precision integrated circuits may be more susceptible to damage because very small parametric changes could cause the device not to meet its published specifications.

7.7 Glossary

TI Glossary This glossary lists and explains terms, acronyms, and definitions.

Copyright © 2008–2014, Texas Instruments Incorporated

8 Mechanical Packaging and Orderable Information

This section describes the C6745/6747 orderable part numbers, packaging options, materials, thermal and mechanical parameters.

This section contains mechanical drawings for the ZKB Plastic Ball Grid Array package and the PTP PowerPAD™ plastic quad flat pack package. Additionally, for the PTP package a detailed drawing of the actual thermal pad dimensions as well as a recommended PCB footprint are provided.

8.1 Thermal Data for ZKB

The following table(s) show the thermal resistance characteristics for the PBGA–ZKB mechanical package.

Table 8-1. Thermal Resistance Characteristics (PBGA Package) [ZKB]

No.			°C/W(1)	°C/W(2)	AIR FLOW (m/s)(3)
1	$R\Theta_{JC}$	Junction-to-case	12.8	13.5	N/A
2	$R\Theta_{JB}$	Junction-to-board	15.1	19.7	N/A
3	$R\Theta_{JA}$	Junction-to-free air	24.5	33.8	0.00
4	$R\Theta_{JMA}$	Junction-to-moving air	21.9	30	0.50
5			21.1	28.7	1.00
6			20.4	27.4	2.00
7			19.6	26	4.00
8	Psi_{JT}	Junction-to-package top	0.6	0.8	0.00
9			0.8	1	0.50
10			0.9	1.2	1.00
11			1.1	1.4	2.00
12			1.3	1.8	4.00
13	Psi_{JB}	Junction-to-board	14.9	19.1	0.00
14			14.4	18.2	0.50
15			14.4	18	1.00
16			14.3	17.7	2.00
17			14.1	17.4	4.00

(1) These measurements were conducted in a JEDEC defined 2S2P system and will change based on environment as well as application. For more information, see these EIA/JEDEC standards – EIA/JESD51-2, *Integrated Circuits Thermal Test Method Environment Conditions - Natural Convection (Still Air)* and JESD51-7, *High Effective Thermal Conductivity Test Board for Leaded Surface Mount Packages*. Power dissipation of 1W and ambient temp of 70C assumed. PCB with 2oz (70um) top and bottom copper thickness and 1.5oz (50um) inner copper thickness

(2) Simulation data, using the same model but with 1oz (35um) top and bottom copper thickness and 0.5oz (18um) inner copper thickness. Power dissipation of 1W and ambient temp of 70C assumed.

(3) m/s = meters per second

Copyright © 2008–2014, Texas Instruments Incorporated

8.2 Thermal Data for PTP

The following table(s) show the thermal resistance characteristics for the PowerPAD™ PTP mechanical package.

Table 8-2. Thermal Resistance Characteristics (PowerPAD™ Package) [PTP]"

No.			°C/W(1)	°C/W(2)	°C/W(3)	°C/W(4)	AIR FLOW (m/s)(5)
1	$R\Theta_{JC}$	Junction-to-case	7.8	9.4	8.6	10.1	N/A
2	$R\Theta_{JB}$	Junction-to-board	6.2	9.9	7.1	10.6	N/A
3	$R\Theta_{JA}$	Junction-to-free air	21.3	27.9	23.2	30.6	0.00
4	$R\Theta_{JMA}$	Junction-to-moving air	14.3	20.2		22.6	0.50
5			13.1	18.6		21.0	1.00
6			12.1	17.4		19.6	2.00
7			11.2	16.2		18.2	4.00
8	Psi_{JT}	Junction-to-package top	0.5	0.7		0.8	0.00
9			0.6	0.9		1.0	0.50
10			0.7	1.0		1.1	1.00
11			0.8	1.1		1.3	2.00
12			1.0	1.3		1.5	4.00
13	Psi_{JB}	Junction-to-board	6.3	9.5		10.8	0.00
14			5.9	8.8		9.9	0.50
15			5.9	8.7		9.8	1.00
16			5.8	8.6		9.7	2.00
17			5.8	8.5		9.6	4.00

(1) Simulation data, using a model of a JEDEC defined 2S2P system with a 12mmx12mm copper pad on the top and bottom copper layers connected with an 8x8 thermal via array and soldered to the package thermal pad. Power dissipation of 1W assumed, 70C Ambient temp assumed. Signal layer copper coverage 20%, inner layer copper coverage 90%. Actual performance will change based on environment as well as application. For more information, see these EIA/JEDEC standards – EIA/JESD51-2, *Integrated Circuits Thermal Test Method Environment Conditions - Natural Convection (Still Air)* and JESD51-7, *High Effective Thermal Conductivity Test Board for Leaded Surface Mount Packages*.
(2) Simulation data, using the same model but with 1oz (35um) top and bottom copper thickness and 0.5oz (18um) inner copper thickness. Power dissipation of 1W and ambient temp of 70C assumed.
(3) Simulation data, 1S1P PCB model with 12x12mm copper pad on the top layer soldered to device thermal pad and connected to the bottom copper layer (90% copper) with an 8x8 thermal via array. Power dissipation of 1W and ambient temp of 70C assumed. Copper thickness 2oz (70um) top and bottom.
(4) Simulation data, 1S1P PCB model with 12x12mm copper pad on the top layer soldered to device thermal pad and connected to the bottom copper layer (90% copper) with an 8x8 thermal via array. Power dissipation of 1W and ambient temp of 70C assumed. Copper thickness 1oz (35um) top and bottom.
(5) m/s = meters per second

8.3 Supplementary Information About the 176-pin PTP PowerPAD™ Package

This section highlights a few important details about the 176-pin PTP PowerPAD™ package. Texas Instruments' PowerPAD Thermally Enhanced Package Technical Brief (SLMA002) should be consulted when creating a PCB footprint for this device.

8.3.1 Standoff Height

As illustrated in Figure 8-1, the standoff height specification for this device (between 0.050 mm and 0.150 mm) is measured from the seating plane established by the three lowest package pins to the **lowest** point on the package body. Due to warpage, the lowest point on the package body is located in the center of the package at the exposed thermal pad.

Using this definition of standoff height provides the correct result for determining the correct solder paste thickness. According to TI's PowerPAD Thermally Enhanced Package Technical Brief (SLMA002), the recommended range of solder paste thickness for this package is between 0.152 mm and 0.178 mm.

Copyright © 2008–2014, Texas Instruments Incorporated



Figure 8-1. Standoff Height Measurement on 176-pin PTP Package

8.3.2 PowerPAD™ PCB Footprint

In general, for proper thermal performance, the thermal pad under the package body should be as large as possible. However, the soldermask opening for the PowerPAD™ should be sized to match the pad size on the 176-pin PTP package; as illustrated in Figure 8-2.

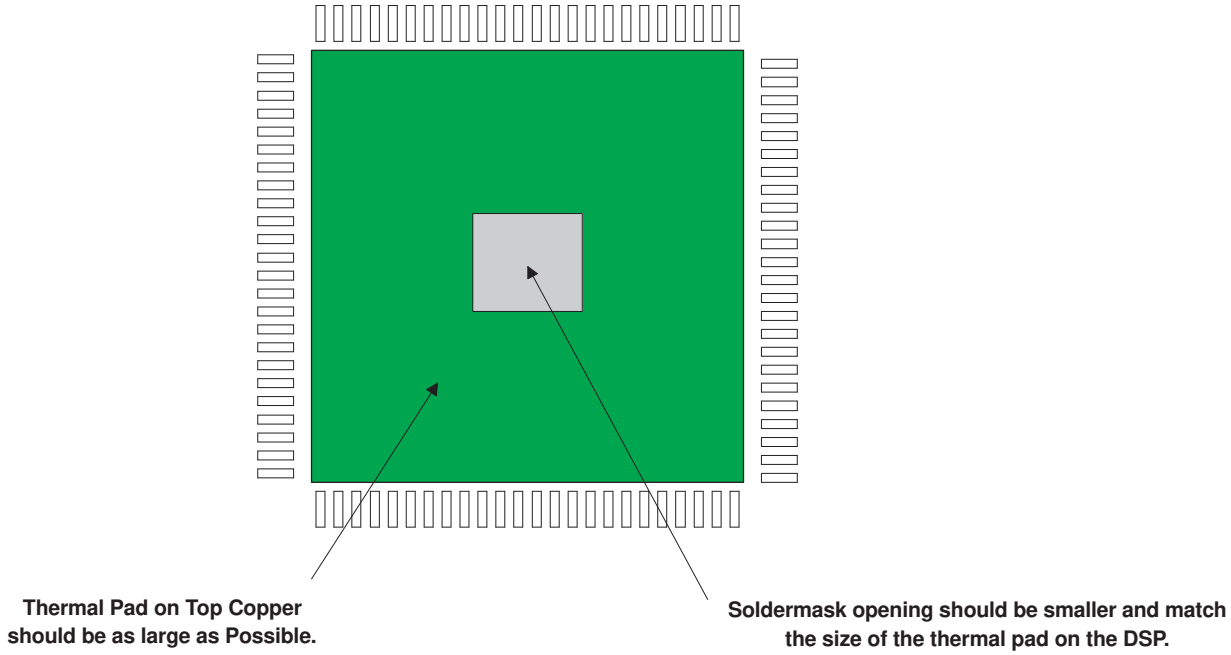

Figure 8-2. Soldermask Opening Should Match Size of DSP Thermal Pad

8.4 Packaging Information

The following packaging information and addendum reflect the most current data available for the designated device(s). This data is subject to change without notice and without revision of this document.

PACKAGING INFORMATION

Orderable part number	Status (1)	Material type (2)	Package | Pins	Package qty | Carrier	RoHS (3)	Lead finish/ Ball material (4)	MSL rating/ Peak reflow (5)	Op temp (°C)	Part marking (6)
TMS320C6745DPTP3	Active	Production	HLQFP (PTP) | 176	40 | JEDEC TRAY (5+1)	Yes	Call TI	Level-4-260C-72 HR	0 to 90	TMS320 C6745DPTP3
TMS320C6745DPTP3.B	Active	Production	HLQFP (PTP) | 176	40 | JEDEC TRAY (5+1)	Yes	Call TI	Level-4-260C-72 HR	-40 to 125	TMS320 C6745DPTP3
TMS320C6745DPTP4	Active	Production	HLQFP (PTP) | 176	40 | JEDEC TRAY (5+1)	Yes	Call TI	Level-4-260C-72 HR	-40 to 125	TMS320 C6745DPTP4
TMS320C6745DPTP4.B	Active	Production	HLQFP (PTP) | 176	40 | JEDEC TRAY (5+1)	Yes	Call TI	Level-4-260C-72 HR	-40 to 125	TMS320 C6745DPTP4
TMS320C6745DPTPA3	Active	Production	HLQFP (PTP) | 176	40 | JEDEC TRAY (5+1)	Yes	Call TI	Level-4-260C-72 HR	-40 to 105	TMS320 C6745DPTPA3
TMS320C6745DPTPA3.B	Active	Production	HLQFP (PTP) | 176	40 | JEDEC TRAY (5+1)	Yes	Call TI	Level-4-260C-72 HR	-40 to 125	TMS320 C6745DPTPA3
TMS320C6745DPTPD4	Active	Production	HLQFP (PTP) | 176	40 | JEDEC TRAY (5+1)	Yes	NIPDAU	Level-4-260C-72 HR	-40 to 90	TMS320 C6745DPTPD4
TMS320C6745DPTPD4.B	Active	Production	HLQFP (PTP) | 176	40 | JEDEC TRAY (5+1)	Yes	NIPDAU	Level-4-260C-72 HR	-40 to 125	TMS320 C6745DPTPD4
TMS320C6745DPTPT3	Active	Production	HLQFP (PTP) | 176	40 | JEDEC TRAY (5+1)	Yes	NIPDAU	Level-4-260C-72 HR	-40 to 125	TMS320 C6745DPTPT3
TMS320C6745DPTPT3.B	Active	Production	HLQFP (PTP) | 176	40 | JEDEC TRAY (5+1)	Yes	NIPDAU	Level-4-260C-72 HR	-40 to 125	TMS320 C6745DPTPT3
TMS320C6747DZKB3	Active	Production	BGA (ZKB) | 256	90 | JEDEC TRAY (5+1)	Yes	SNAGCU	Level-3-260C-168 HR	0 to 90	TMS320 C6747DZKB3
TMS320C6747DZKB3.B	Active	Production	BGA (ZKB) | 256	90 | JEDEC TRAY (5+1)	Yes	SNAGCU	Level-3-260C-168 HR	0 to 90	TMS320 C6747DZKB3
TMS320C6747DZKB4	Active	Production	BGA (ZKB) | 256	90 | JEDEC TRAY (5+1)	Yes	SNAGCU	Level-3-260C-168 HR	-	TMS320 C6747DZKB4
TMS320C6747DZKB4.B	Active	Production	BGA (ZKB) | 256	90 | JEDEC TRAY (5+1)	Yes	SNAGCU	Level-3-260C-168 HR	-40 to 125	TMS320 C6747DZKB4
TMS320C6747DZKBA3	Active	Production	BGA (ZKB) | 256	90 | JEDEC TRAY (5+1)	Yes	Call TI	Level-3-260C-168 HR	-40 to 105	TMS320 C6747DZKBA3
TMS320C6747DZKBA3.B	Active	Production	BGA (ZKB) | 256	90 | JEDEC TRAY (5+1)	Yes	Call TI	Level-3-260C-168 HR	-40 to 105	TMS320 C6747DZKBA3

Orderable part number	Status (1)	Material type (2)	Package | Pins	Package qty | Carrier	RoHS (3)	Lead finish/ Ball material (4)	MSL rating/ Peak reflow (5)	Op temp (°C)	Part marking (6)
TMS320C6747DZKBD4	Active	Production	BGA (ZKB) | 256	90 | JEDEC TRAY (5+1)	Yes	Call TI	Level-3-260C-168 HR	-40 to 90	TMS320 C6747DZKBD4
TMS320C6747DZKBD4.B	Active	Production	BGA (ZKB) | 256	90 | JEDEC TRAY (5+1)	Yes	Call TI	Level-3-260C-168 HR	-40 to 90	TMS320 C6747DZKBD4
TMS320C6747DZKBT3	Active	Production	BGA (ZKB) | 256	90 | JEDEC TRAY (5+1)	Yes	SNAGCU	Level-3-260C-168 HR	-40 to 125	TMS320 C6747DZKBT3
TMS320C6747DZKBT3.B	Active	Production	BGA (ZKB) | 256	90 | JEDEC TRAY (5+1)	Yes	SNAGCU	Level-3-260C-168 HR	-40 to 125	TMS320 C6747DZKBT3

(1) **Status:** For more details on status, see our product life cycle.

(2) **Material type:** When designated, preproduction parts are prototypes/experimental devices, and are not yet approved or released for full production. Testing and final process, including without limitation quality assurance, reliability performance testing, and/or process qualification, may not yet be complete, and this item is subject to further changes or possible discontinuation. If available for ordering, purchases will be subject to an additional waiver at checkout, and are intended for early internal evaluation purposes only. These items are sold without warranties of any kind.

(3) **RoHS values:** Yes, No, RoHS Exempt. See the TI RoHS Statement for additional information and value definition.

(4) **Lead finish/Ball material:** Parts may have multiple material finish options. Finish options are separated by a vertical ruled line. Lead finish/Ball material values may wrap to two lines if the finish value exceeds the maximum column width.

(5) **MSL rating/Peak reflow:** The moisture sensitivity level ratings and peak solder (reflow) temperatures. In the event that a part has multiple moisture sensitivity ratings, only the lowest level per JEDEC standards is shown. Refer to the shipping label for the actual reflow temperature that will be used to mount the part to the printed circuit board.

(6) **Part marking:** There may be an additional marking, which relates to the logo, the lot trace code information, or the environmental category of the part.

Multiple part markings will be inside parentheses. Only one part marking contained in parentheses and separated by a "~" will appear on a part. If a line is indented then it is a continuation of the previous line and the two combined represent the entire part marking for that device.

Important Information and Disclaimer: The information provided on this page represents TI's knowledge and belief as of the date that it is provided. TI bases its knowledge and belief on information provided by third parties, and makes no representation or warranty as to the accuracy of such information. Efforts are underway to better integrate information from third parties. TI has taken and continues to take reasonable steps to provide representative and accurate information but may not have conducted destructive testing or chemical analysis on incoming materials and chemicals. TI and TI suppliers consider certain information to be proprietary, and thus CAS numbers and other limited information may not be available for release.

In no event shall TI's liability arising out of such information exceed the total purchase price of the TI part(s) at issue in this document sold by TI to Customer on an annual basis.

ZKB (S–PBGA–N256) PLASTIC BALL GRID ARRAY

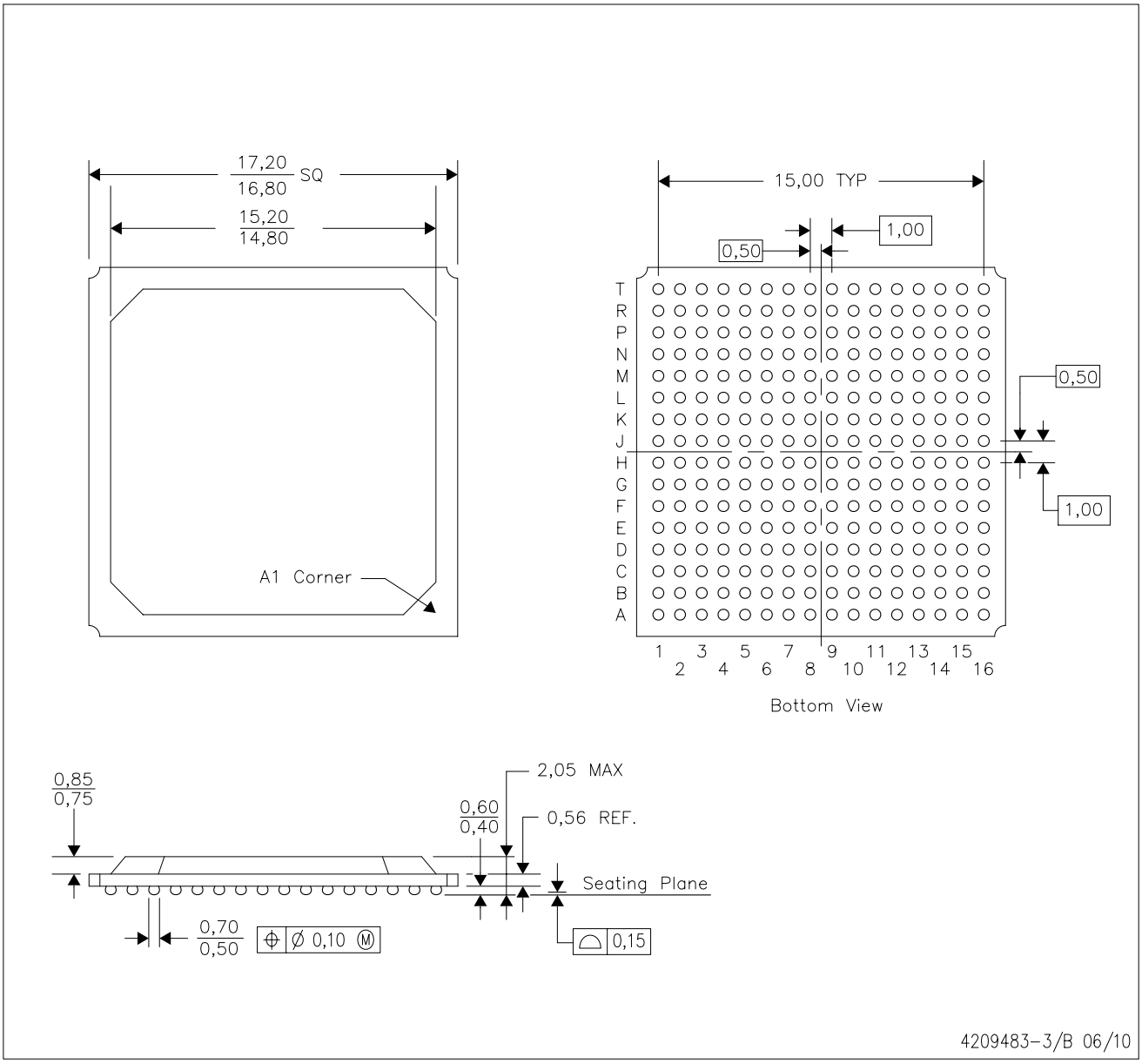

NOTES:
A. All linear dimensions are in millimeters. Dimensioning and tolerancing per ASME Y14.5–1994.
B. This drawing is subject to change without notice.
C. This is a Pb–free solder ball design.

GENERIC PACKAGE VIEW

PTP 176

HLQFP - 1.6 mm max height

24 x 24, 0.5 mm pitch

PLASTIC QUAD FLATPACK

This image is a representation of the package family, actual package may vary.
Refer to the product data sheet for package details.

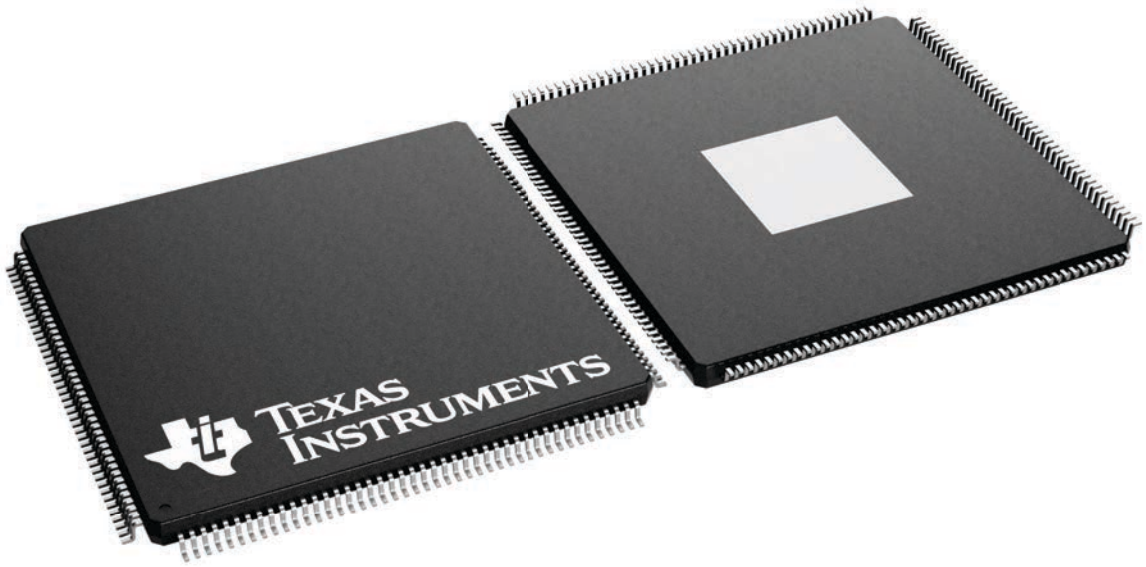

4226435/A

PTP (S–PQFP–G176) PowerPAD™ PLASTIC QUAD FLATPACK

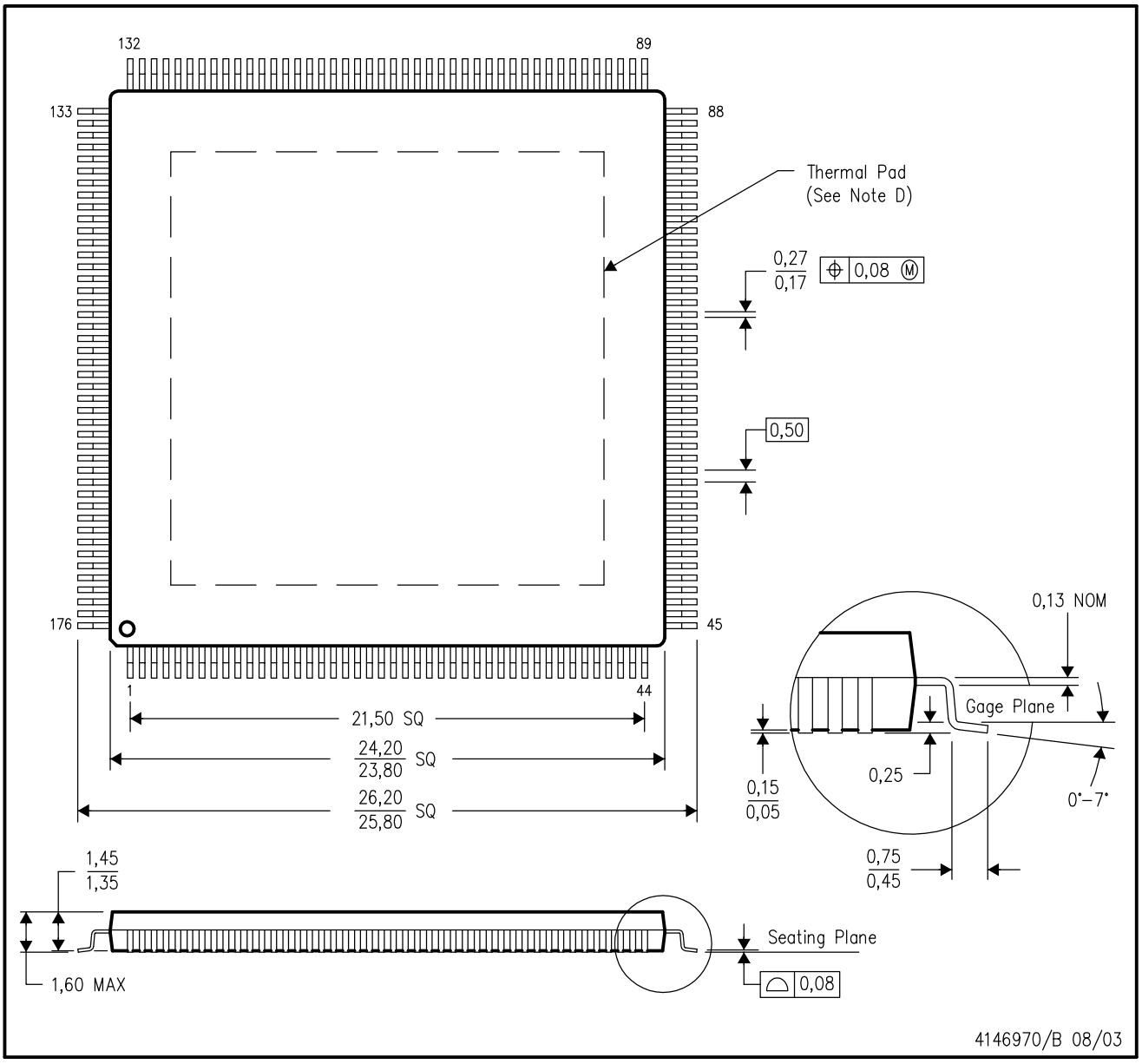

NOTES:
A. All linear dimensions are in millimeters.
B. This drawing is subject to change without notice.
C. Body dimensions do not include mold flash or protrusion.
D. This package is designed to be soldered to a thermal pad on the board. Refer to Technical Brief, PowerPad Thermally Enhanced Package, Texas Instruments Literature No. SLMA002 for information regarding recommended board layout. This document is available at www.ti.com <http://www.ti.com>.
E. Falls within JEDEC MO–026

PowerPAD is a trademark of Texas Instruments.

PTP (S–PQFP–G176) PowerPAD™ PLASTIC QUAD FLATPACK

THERMAL INFORMATION

This PowerPAD™ package incorporates an exposed thermal pad that is designed to be attached to a printed circuit board (PCB). The thermal pad must be soldered directly to the PCB. After soldering, the PCB can be used as a heatsink. In addition, through the use of thermal vias, the thermal pad can be attached directly to the appropriate copper plane shown in the electrical schematic for the device, or alternatively, can be attached to a special heatsink structure designed into the PCB. This design optimizes the heat transfer from the integrated circuit (IC).

For additional information on the PowerPAD package and how to take advantage of its heat dissipating abilities, refer to Technical Brief, PowerPAD Thermally Enhanced Package, Texas Instruments Literature No. SLMA002 and Application Brief, PowerPAD Made Easy, Texas Instruments Literature No. SLMA004. Both documents are available at www.ti.com.

The exposed thermal pad dimensions for this package are shown in the following illustration.

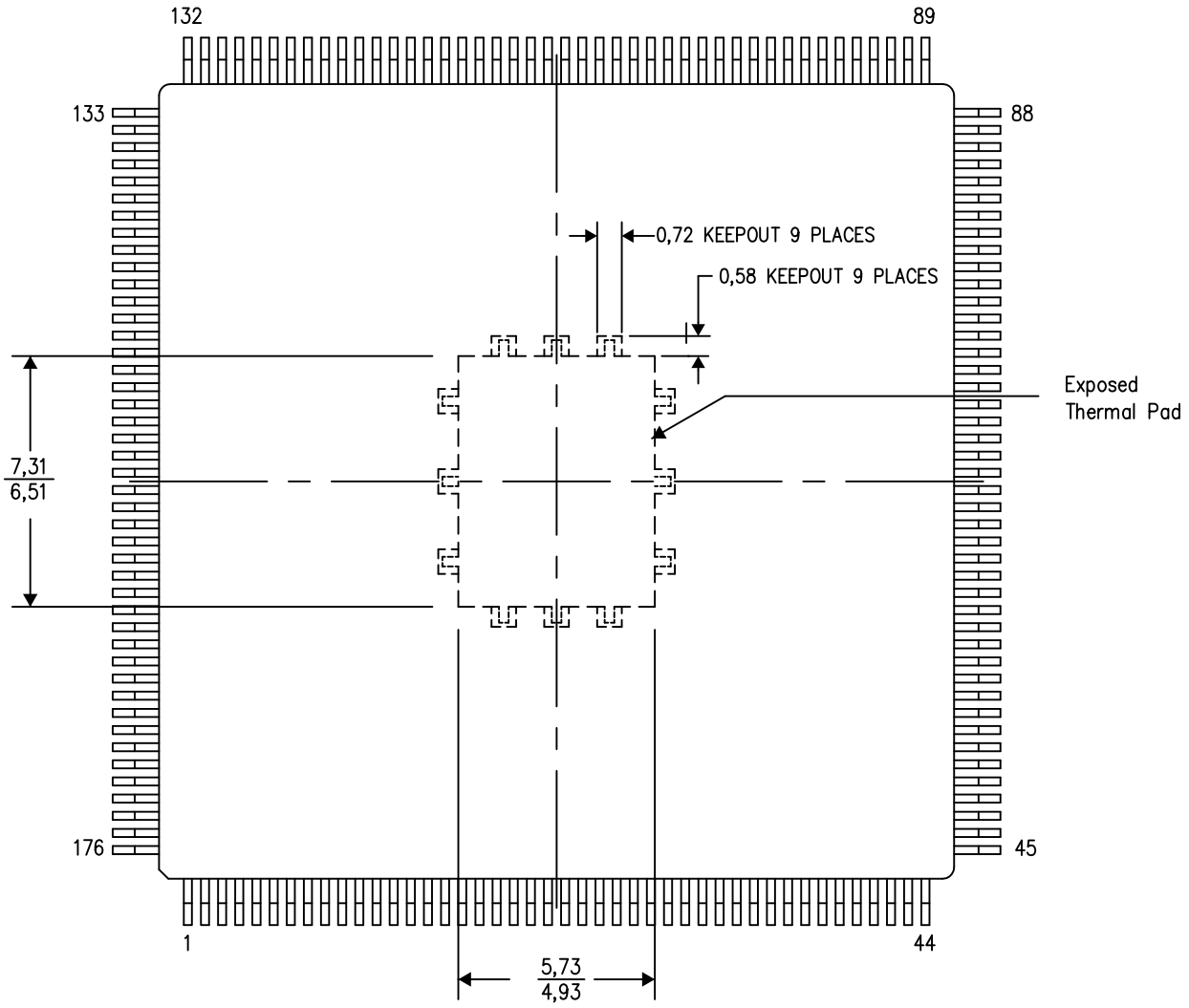

Top View

Exposed Thermal Pad Dimensions 4209350–6/F 04/13

NOTE: All linear dimensions are in millimeters

PowerPAD is a trademark of Texas Instruments

PTP (S–PQFP–G176) PowerPAD™ PLASTIC QUAD FLATPACK

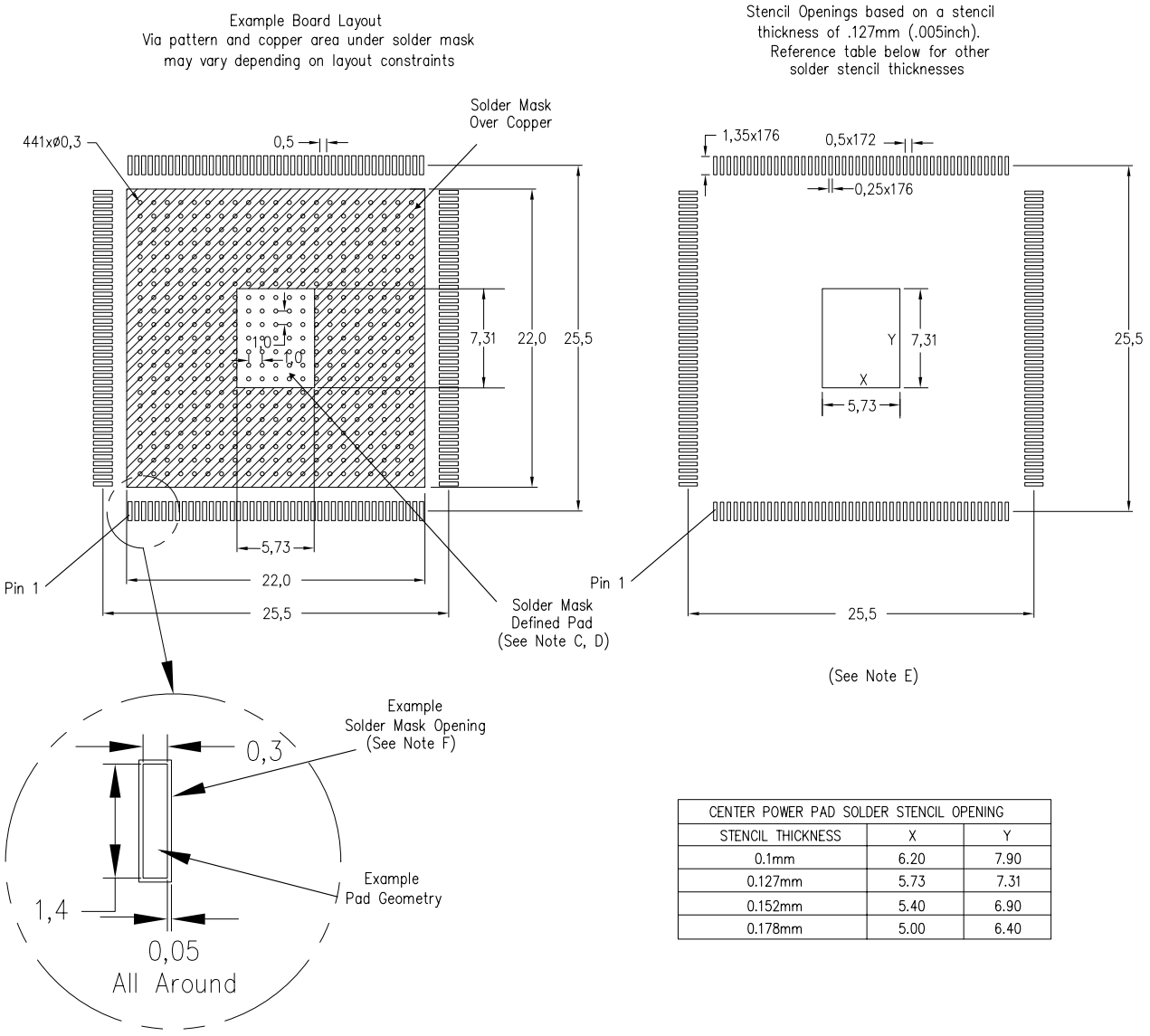

CENTER POWER PAD SOLDER STENCIL OPENING		
STENCIL THICKNESS	X	Y
0.1mm	6.20	7.90
0.127mm	5.73	7.31
0.152mm	5.40	6.90
0.178mm	5.00	6.40

NOTES:
A. All linear dimensions are in millimeters.
B. This drawing is subject to change without notice.
C. Customers should place a note on the circuit board fabrication drawing not to alter the center solder mask defined pad.
D. This package is designed to be soldered to a thermal pad on the board. Refer to Technical Brief, PowerPad Thermally Enhanced Package, Texas Instruments Literature No. SLMA002, SLMA004, and also the Product Data Sheets for specific thermal information, via requirements, and recommended board layout. These documents are available at www.ti.com <http://www.ti.com>. Publication IPC–7351 is recommended for alternate designs.
E. Laser cutting apertures with trapezoidal walls and also rounding corners will offer better paste release. Customers should contact their board assembly site for stencil design recommendations. Example stencil design based on a 50% volumetric metal load solder paste. Refer to IPC–7525 for other stencil recommendations.
F. Customers should contact their board fabrication site for solder mask tolerances between and around signal pads.

PowerPAD is a trademark of Texas Instruments.

IMPORTANT NOTICE AND DISCLAIMER

TI PROVIDES TECHNICAL AND RELIABILITY DATA (INCLUDING DATASHEETS), DESIGN RESOURCES (INCLUDING REFERENCE DESIGNS), APPLICATION OR OTHER DESIGN ADVICE, WEB TOOLS, SAFETY INFORMATION, AND OTHER RESOURCES “AS IS” AND WITH ALL FAULTS, AND DISCLAIMS ALL WARRANTIES, EXPRESS AND IMPLIED, INCLUDING WITHOUT LIMITATION ANY IMPLIED WARRANTIES OF MERCHANTABILITY, FITNESS FOR A PARTICULAR PURPOSE OR NON-INFRINGEMENT OF THIRD PARTY INTELLECTUAL PROPERTY RIGHTS.

These resources are intended for skilled developers designing with TI products. You are solely responsible for (1) selecting the appropriate TI products for your application, (2) designing, validating and testing your application, and (3) ensuring your application meets applicable standards, and any other safety, security, regulatory or other requirements.

These resources are subject to change without notice. TI grants you permission to use these resources only for development of an application that uses the TI products described in the resource. Other reproduction and display of these resources is prohibited. No license is granted to any other TI intellectual property right or to any third party intellectual property right. TI disclaims responsibility for, and you fully indemnify TI and its representatives against any claims, damages, costs, losses, and liabilities arising out of your use of these resources.

TI’s products are provided subject to TI’s Terms of Sale, TI’s General Quality Guidelines, or other applicable terms available either on ti.com or provided in conjunction with such TI products. TI’s provision of these resources does not expand or otherwise alter TI’s applicable warranties or warranty disclaimers for TI products. Unless TI explicitly designates a product as custom or customer-specified, TI products are standard, catalog, general purpose devices.

TI objects to and rejects any additional or different terms you may propose.

Copyright © 2026, Texas Instruments Incorporated

Last updated 10/2025

Looking for pricing, stock, or lifecycle information?

Click below to explore more details on WIN SOURCE:

- View TMS320C6747CZKBA3 on WIN SOURCE
- Texas Instruments Information

Optimize Your Supply Chain with WIN SOURCE Solutions

- Global Sourcing Solution
- Obsolete Management
- Cost Control Management
- Shortage Management
- Alternative Solution
- Excess Inventory Management