THE DATASHEET OF

TMS320C6474FZUN8

www.win-source.net 0086-755-83957316

TMS320C6474 Multicore Digital Signal Processor

1 Features

- *Key Features*
  - High-Performance Multicore DSP (C6474)
  - Instruction Cycle Time: 0.83 ns (1.2-GHz Device); 1 ns (1-GHz Device); 1.18 ns (850-MHz Device)
  - Clock Rate: 1 GHz to 1.2 GHz (1.2-GHz Device); 1 GHz (1-GHz Device); 850 MHz (850-MHz Device)
  - Commercial Temperature and Extended Temperature
  - 3 TMS320C64x+™ DSP Cores; Six RSAs for CDMA Processing (2 per core)
  - Enhanced VCP2/TCP2
  - Frame Synchronization Interface
  - 16-/32-Bit DDR2-667 Memory Controller
  - EDMA3 Controller
  - Antenna Interface
  - Two 1x Serial RapidIO® Links, v1.2 Compliant
  - One 1.8-V Inter-Integrated Circuit (I2C) Bus
  - Two 1.8-V McBSPs
  - 1000 Mbps Ethernet MAC (EMAC)
  - Six 64-Bit General-Purpose Timers
  - 16 General-Purpose I/O (GPIO) Pins
  - Internal Semaphore Module
  - System PLL and PLL Controller/DDR PLL and PLL Controller, Dedicated to DDR2 Memory Controller
- High-Performance Multicore DSP (C6474)
  - Instruction Cycle Time:
    - 1.2-GHz Device: 0.83-ns
    - 1-GHz Device: 1-ns
    - 850-MHz Device: 1.18 ns
  - Clock Rate:
    - 1.2-GHz Device: 1 GHz to 1.2 GHz
    - 1-GHz Device: 1 GHz
    - 850-MHz Device: 850 MHz
  - Eight 32-Bit Instructions/Cycle
  - Commercial Temperature:
    - 1.2-GHz Device: 0°C to 95°C
    - 850-MHZ and 1-GHz Device: 0°C to 100°C
  - Extended Temperature:
    - 1.2-GHz Device: -40°C to 95°C(1)
    - 1-GHz Device: -40°C to 100°C
- 3 TMS320C64x+™ DSP Cores
  - Dedicated SPLOOP Instructions
  - Compact Instructions (16-Bit)
  - Exception Handling
- TMS320C64x+ Megamodule L1 Memory Architecture
  - 256 K-Bit (32 K-Byte) L1P Program Cache [Direct Mapped]
  - 256 K-Bit (32 K-Byte) L1D Data Cache [2-Way Set-Associative]
  - 512 K-Bit (64 K-Byte) L3 ROM
- Enhanced VCP2
  - Supports Over 694 7.95-Kbps AMR
- Enhanced Turbo Decoder Coprocessor (TCP2)
  - Supports up to Eight 2-Mbps 3 GPP (6 Iterations)
- Endianness: Little Endian, Big Endian
- Frame Synchronization Interface
  - Time Alignment Between Internal Subsystems, External Devices/System
  - OBSAI RP1 Compliant for Frame Burst Data
  - Alternate Interfaces for non-RP1 and non-UMTS Systems
- 16-/32-Bit DDR2-667 Memory Controller
- EDMA3 Controller (64 Independent Channels)
- Antenna Interface
  - 6 Configurable Links (Full Duplex)
  - Supports OBSAI RP3 Protocol, v1.0: 768-Mbps, 1.536-, 3.072-Gbps Link Rates
  - Supports CPRI Protocol V2.0: 614.4-Mbps, 1.2288-, 2.4576-Gbps Link Rates
  - Clock Input Independent or Shared with CPU (Selectable at Boot-Time)
- Two 1x Serial RapidIO® Links, v1.2 Compliant
  - 1.25-, 2.5-, 3.125-Gbps Link Rates
  - Message Passing and DirectIO Support
  - Error Management Extensions and Congestion Control
- One 1.8-V Inter-Integrated Circuit (I2C) Bus
- Two 1.8-V McBSPs

(1) **Note:** Advance Information is presented in this document for the C6474 1.2-GHz extended temperature device.

Please be aware that an important notice concerning availability, standard warranty, and use in critical applications of Texas Instruments semiconductor products and disclaimers thereto appears at the end of this data sheet.
All trademarks are the property of their respective owners.

PRODUCTION DATA information is current as of publication date. Products conform to specifications per the terms of the Texas Instruments standard warranty. Production processing does not necessarily include testing of all parameters.

Copyright © 2008–2011, Texas Instruments Incorporated

- **1000 Mbps Ethernet MAC (EMAC)**
  - **IEEE 802.3 Compliant**
  - **Supports SGMII, v1.8 Compliant**
  - **8 Independent Transmit (TX) and 8 Independent Receive (RX) Channels**
- **Six 64-Bit General-Purpose Timers**
  - **Configurable up to Twelve 32-Bit Timers**
  - **Configurable in a Watchdog Timer mode**
- **16 General-Purpose I/O (GPIO) Pins**
- **Internal Semaphore Module**
  - **Software Method to Control Access to Shared Resources**
  - **32 General Purpose Semaphore Resources**
- **System PLL and PLL Controller**
- **DDR PLL and PLL Controller, Dedicated to DDR2 Memory Controller**
- **IEEE-1149.1 and IEEE-1149.6 (JTAG™) Boundary-Scan-Compatible**
- **561-Pin Ball Grid Array (BGA) Packages (CUN, GUN, or ZUN Suffix), 0.8-mm Ball Pitch**
- **0.065-µm/7-Level Cu Metal Process (CMOS)**
- **SmartReflex™ Class 0 - 0.9-V to 1.2-V Adaptive Core Voltage**
- **1.8-V, 1.1-V I/Os**

1.1 CUN/GUN/ZUN BGA Package (Bottom View)

The devices are designed for a package temperature range of 0°C to 100°C (commercial temperature range; 1-GHz device), -40°C to 100°C (extended temperature range; 1-GHz device), 0°C to 95°C (commercial temperature range; 850-MHz and 1.2-GHz device), and -40°C to 95°C (extended temperature range; 1.2-GHz device). A heatsink is required so that this range is not exceeded.

NOTE

Advance Information is presented in this document for the C6474 1.2-GHz extended temperature device.

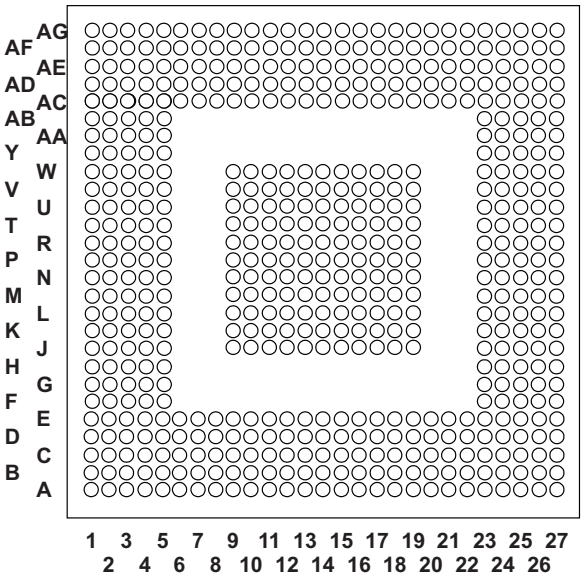

Figure 1-1. CUN/GUN/ZUN 561-Pin BGA Package (Bottom View)

Copyright © 2008–2011, Texas Instruments Incorporated

1.2 Description

The TMS320C64x+ DSPs (including the TMS320C6474 device) are the highest-performance multicore DSP generation in the TMS320C6000™ DSP platform.

The C6474 device is based on the third-generation high-performance, advanced VelociTI™ very-long-instruction-word (VLIW) architecture developed by Texas Instruments (TI).

The C64x+™ devices are upward code-compatible from previous devices that are part of the C6000™ DSP platform.

1.2.1 Core Processor

Based on 65-nm process technology and 3.6 GHz of total raw DSP processing power with performance of up to 28,800 million instructions per second (MIPS) [or 28,800 16-bit MMACs per cycle], the C6474 device offers cost-effective solutions to high-performance DSP programming challenges with three independent DSP subsystems. The DSP possesses the operational flexibility of high-speed controllers and numerical capability of array processors.

The C64x+ DSP core employs eight functional units, two register files, and two data paths. Like the earlier C6000 devices, two of these functional units are multipliers or .M units. Each C64x+ .M unit doubles the multiply throughput versus the C64x core by performing four 16-bit x 16-bit multiply-accumulates (MACs) every clock cycle. Thus, eight 16-bit x 16-bit MACs can be executed every cycle on the C64x+ core. At a1.2-GHz rate, this means 9600 16-bit MMACs can occur every microsecond. Moreover, each multiplier on the C64x+ core can compute one 32-bit x 32-bit MAC or four 8-bit x 8-bit MACs every clock cycle.

The C6474 DSP integrates a large amount of on-chip memory organized as a three-level memory system. The level-1 data memories on the device are 32 KB each. This memory can be configured as mapped RAM, cache, or some combination of the two. When configured as cache, L1 program (L1P) is a direct-mapped cache where as L1 data (L1D) is a two-way set associative cache. The level-3 (L3) ROM is 64 KB in the device. The C64x+ megamodule also has a 32-bit peripheral configuration (CFG) port, an internal DMA (IDMA) controller, a system component with reset/boot control, and a free-running 32-bit timer for time stamp.

The C64x+ DSP core has a complete set of development tools which includes: a new C compiler, an assembly optimizer to simplify programming and scheduling, and a Windows® debugger interface for visibility into source code execution.

The DMA switch fabric provides enhanced on-chip connectivity between the DSP cores and the peripherals and accelerators.

1.2.2 Peripherals

The peripheral set includes: an inter-integrated circuit bus module (I2C); two multichannel buffered serial ports (McBSPs) each at 100 Mbps; six 64-bit general-purpose timers (also configurable as twelve 32-bit timers); 16 general-purpose input/output ports (GPIO) with programmable interrupt/event generation modes; a 1000-Mbps Ethernet media access controller (EMAC), which provides an efficient interface between the C6474 DSP core processor and the network; a management data input/output (MDIO) module (also part of EMAC), which controls PHY configuration and status monitoring; a frame synchronization (FSYNC) module, which synchronizes DMA transactions; a semaphore hardware block (Semaphore), which allows access to shared resources with unique interrupts to each of the cores to identify when that core has acquired the resource; and a 16-/32-bit DDR2 SDRAM interface.

The I2C port allows the DSP to easily control peripheral devices and communicate with a host processor.

Copyright © 2008–2011, Texas Instruments Incorporated

The device includes two Serial RapidIO® (SRIO) with link rates of 1.25 Gbps, 2.5 Gbps or 3.125 Gbps. This high-bandwidth peripheral is used for point-to-point inter-device communication and may connect the C6474 device to other DSPs, ASICs, or switches on the same board or across the backplane. This dramatically improves system performance and reduces system cost for applications that include multiple DSPs on a board such as video and telecom infrastructures and medical/imaging. The SRIO also provides alarm, interrupt, and messaging events.

The device includes the SerDes-based antenna interface (AIF) capable of up to 3.072 Gbps operation per link. The AIF comprises six high-speed serial links, compliant to OBSAI RP3 and CPRI standards. The antenna interface is used to connect the backplane for antenna data transmission and reception. Each link of the AIF includes a differential receive and transmit signal pair.

1.2.3 Accelerators

The device has two high-performance embedded coprocessors [enhanced Viterbi Decoder Coprocessor (VCP2) and enhanced turbo decoder coprocessor (TCP2)] that significantly speed up channel-decoding operations on-chip. The VCP2 operating at CPU clock divided-by-3 can decode over 694 7.95-Kbps adaptive multi-rate (AMR) [K=9, R=1/3] voice channels. The VCP2 supports constraint lengths K = 5, 6, 7, 8, and 9, rates R = 3/4, 1/2, 1/3, and 1/5, and flexible polynomials, while generating hard decisions or soft decisions. The TCP2 operating at CPU clock divided-by-3 can decode up to fifty 384-Kbps or eight 2-Mbps turbo encoded channels (assuming 6 iterations). The TCP2 implements the max*log-map algorithm and is designed to support all polynomials and rates required by third-generation partnership projects (3 GPP and 3 GPP2), with fully programmable frame length and turbo interleaver. Decoding parameters such as the number of iterations and stopping criteria are also programmable. Communications between the VCP2/TCP2 and the CPU are carried out through the EDMA3 controller.

Copyright © 2008–2011, Texas Instruments Incorporated

1.3 C6474 Functional Block Diagram

Figure 1-2 shows the functional block diagram of the C6474 device.

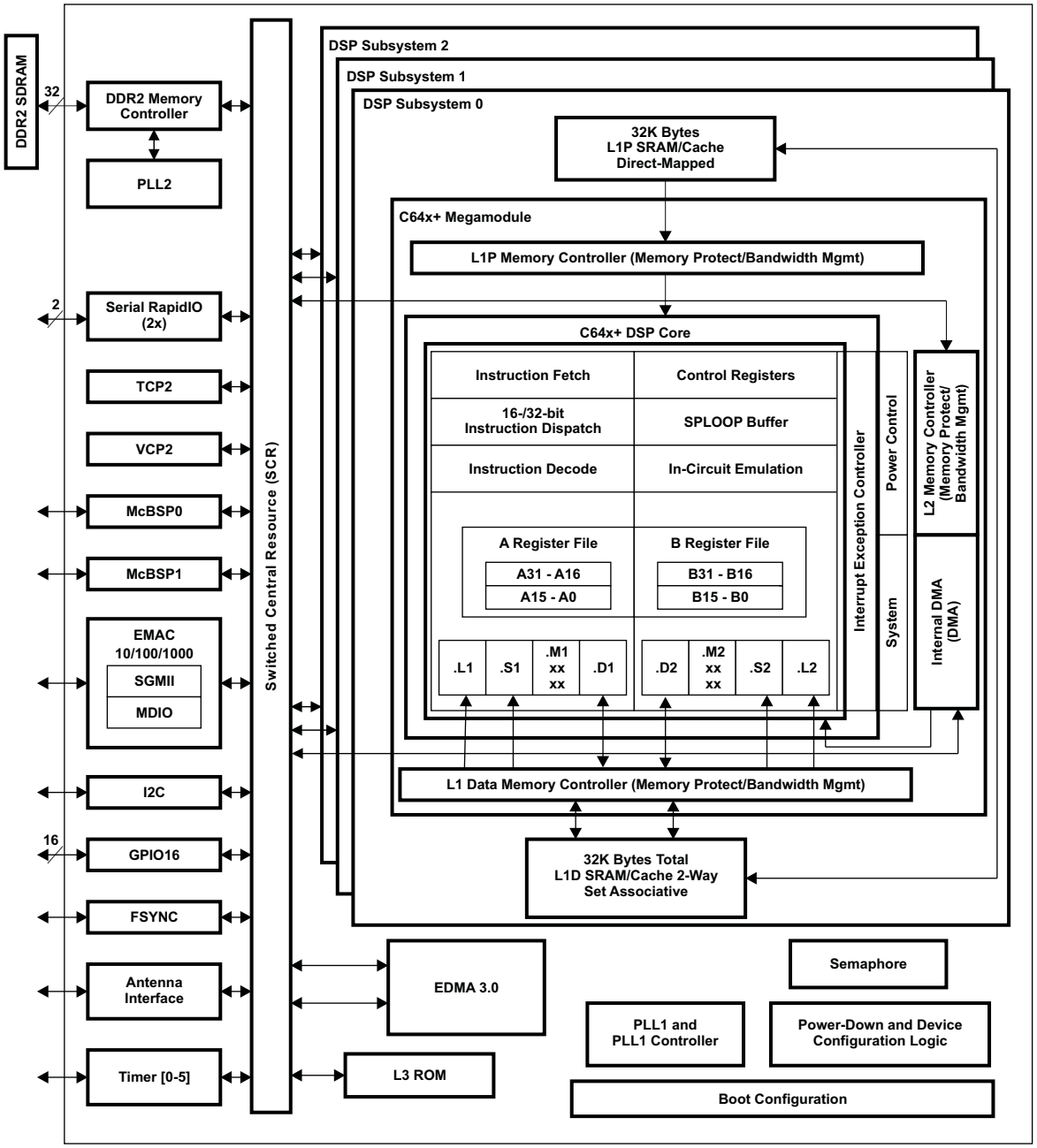

Figure 1-2. Functional Block Diagram

1 Features 1
1.1 CUN/GUN/ZUN BGA Package (Bottom View) 2
1.2 Description 3
1.3 C6474 Functional Block Diagram 5
Revision History 7
2 Device Overview 8
2.1 Device Characteristics 8
2.2 CPU (DSP Core) Description 9
2.3 Memory Map Summary 12
2.4 Boot Sequence 15
2.5 Pin Assignments 17
2.6 Signal Groups Description 21
2.7 Terminal Functions 26
2.8 Development and Device Support 41
2.9 Documentation Support 42
2.10 Community Resources 44
3 Device Configuration 45
3.1 Device Configuration at Device Reset 45
3.2 Peripheral Selection After Device Reset 45
3.3 Device State Control Registers 46
3.4 Device Status Register Descriptions 47
3.5 Inter-DSP Interrupt Registers (IPCGR0-IPCGR2 and IPCAR0-IPCAR2) 49
3.6 JTAG ID (JTAGID) Register Description 50
3.7 Debugging Considerations 50
4 System Interconnect 51
4.1 Internal Buses, Switch Fabrics, and Bridges/Gaskets 51
4.2 Data Switch Fabric Connections 52
4.3 Configuration Switch Fabric 55
4.4 Priority Allocation 57
5 C64x+ Megamodule 58
5.1 Megamodule Diagram 58
5.2 Memory Architecture 59
5.3 Memory Protection 61
5.4 Bandwidth Management 62
5.5 Power-Down Control 63
5.6 Megamodule Resets 63
5.7 Megamodule Revision 63
5.8 C64X+ Megamodule Register Description(s) 64
6 Device Operating Conditions 72
6.1 Absolute Maximum Ratings Over Operating Case Temperature Range (Unless Otherwise Noted) 72
6.2 Recommended Operating Conditions 73
6.3 Electrical Characteristics Over Recommended Ranges of Supply Voltage and Operating Case Temperature (Unless Otherwise Noted) 74
7 Peripheral Information and Electrical Specifications 75
7.1 Parameter Information 75
7.2 Recommended Clock and Control Signal Transition Behavior 76
7.3 Power Supplies 76
7.4 Peripheral IDs (PIDs) 79
7.5 Enhanced Direct Memory Access (EDMA3) Controller 80
7.6 Interrupts 104
7.7 Reset Controller 112
7.8 PLL1 and PLL1 Controller 117
7.9 PLL2 and PLL2 Controller 130
7.10 DDR2 Memory Controller 132
7.11 I2C Peripheral 135
7.12 Multichannel Buffered Serial Port (McBSP) 140
7.13 Ethernet MAC (EMAC) 149
7.14 Management Data Input/Output (MDIO) 157
7.15 Timers 159
7.16 Enhanced Viterbi-Decoder Coprocessor (VCP2) 168
7.17 Enhanced Turbo Decoder Coprocessor (TCP2) 170
7.18 Serial RapidIO (SRIO) Port 172
7.19 General Purpose Input/Output (GPIO) 184
7.20 Emulation Features and Capability 185
7.21 Semaphore 189
7.22 Antenna Interface Subsystem 192
7.23 Frame Synchronization 204
8 Mechanical Data 208
8.1 Thermal Data 208
8.2 Packaging Information 208

Copyright © 2008–2011, Texas Instruments Incorporated

Revision History

NOTE: Page numbers for previous revisions may differ from page numbers in the current version.

This data manual revision history highlights the technical changes made to the data manual in this revision.

Scope: Applicable updates to the C64x device family, specifically relating to the TMS320C6474 device, have been incorporated.

C6474 Revision History

SEE	ADDITIONS/MODIFICATIONS/DELETIONS
Section 7.13.2	EMAC Peripheral Register Descriptions: Corrected starting address for Table 7-57, EMAC Descriptor Memory Modified Table 7-59, EMAC Interrupt Control (EMIC) Registers

Copyright © 2008–2011, Texas Instruments Incorporated

2 Device Overview

2.1 Device Characteristics

Table 2-1 provides an overview of the C6474 DSP. The tables show significant features of the C6474 device, including the capacity of on-chip RAM, the peripherals, the CPU frequency, and the package type with pin count.

Table 2-1. Characteristics of the C6474 Processor

HARDWARE FEATURES		C6474
Peripherals Not all peripherals pins are available at the same time. (For more detail, see Section 3, *Device Configuration*)	DDR2 Memory Controller (32-bit bus width) [1.8 V I/O] (clock memory = DDRREFCLK(N|P)	1
	EDMA3 (64 independent channels [CPU/3 clock rate]	1
	High-speed 1x Serial RapidIO Port (2 lanes)	1
	I2C	1
	McBSPs (internal or external clock source up to 100 Mbps)	2
	1000 Ethernet MAC (EMAC)	1
	Management Data Input/Output (MDIO)	1
	Antenna Interface (AIF)	1
	Frame Synchronization (FSYNC)	1
	64-bit Timers (Configurable) (internal clock source CPU/6 clock frequency)	6 64-bit **or** 12 32-bit
	SYSCLKOUT	1
	General Purpose Input/Output Port (GPIO)	16
Decoder Coprocessors	VCP2 (clock source = CPU/3 clock frequency)	1
	TCP2 (clock source = CPU/3 clock frequency)	1
On-Chip Memory	Size (Bytes)	3200 KB
	Organization	32KB L1P Program Cache (SRAM/Cache) 32KB L1D Data Cache (SRAM/Cache) 32KB Data Memory Controller 3072KB Total L2 Unified Memory SRAM/Cache 64KB L3 ROM
CPU Megamodule Revision ID	Revision ID Register (MM_REVID. [15:0]) 0x0181 2000)	0x0
JTAG Device_ID	JTAG Register (address location: 0x0288 0814)	For details, see Section 3.6
Frequency	MHz	850 - 1200 (850 MHz to 1.2 GHz)
Cycle Time	ns	1.18 ns - 0.83 ns (850 MHz to 1.2 GHz CPU)
Voltage	Core (V)	0.9-V to 1.2-V SmartReflex(1) 1.1 V
	I/O (V)	1.8 V, 1.1 V
PLL1 and PLL1 Controller Options	CLKIN1 Frequency Multiplier	Bypass (x1), (x4 to x32)
PLL2	DDR Clock	X10
BGA Package	23 X 23 mm	561-Pin Flip-Chip with BGA CUN/GUN/ZUN
Process Technology	µm	0.065 µm

(1) A heatsink and implementation of the SmartReflex solution is required for proper device operation. For more details on SmartReflex, see Section 7.3.4.

Copyright © 2008–2011, Texas Instruments Incorporated

Table 2-1. Characteristics of the C6474 Processor (continued)

HARDWARE FEATURES		C6474
Product Status(1)	Product Preview (PP), Advance Information (AI), or Production Data (PD)	PD
Device Part Numbers	(For more details on C64x+ DSP part numbering, see Figure 2-11)	TMS320C6474CUN/GUN/ZUN

(1) PRODUCTION DATA information is current as of publication date. Products conform to specifications per the terms of Texas Instruments standard warranty. Production processing does not necessarily include testing of all parameters. **Note:** Advance Information is presented in this document for the C6474 1.2-GHz extended temperature device.

2.2 CPU (DSP Core) Description

The C64x+ central processing unit (CPU) consists of eight functional units, two register files, and two data paths as shown in Figure 2-1. The two general-purpose register files (A and B) each contain 32 (thirty-two) 32-bit registers for a total of 64 registers. The general-purpose registers can be used for data or can be data address pointers. The data types supported include packed 8-bit data, 32-bit data, 40-bit data, and 64-bit data. Values larger than 32 bits, such as 40-bit-long or 64-bit-long values are stored in register pairs, with the 32 LSBs of data placed in an even register and the remaining 8 or 32 MSBs in the next upper register (which is always an odd-numbered register).

The eight functional units (.M1, .L1, .D1, .S1, .M2, .L2, .D2, and .S2) are each capable of executing one instruction every clock cycle. The .M functional units perform all multiply operations. The .S and .L units perform a general set of arithmetic, logical, and branch functions. The .D units primarily load data from memory to the register file and store results from the register file into memory.

The C64x+ CPU extends the performance of the C64x core through enhancements and new features.

Each C64x+ .M unit can perform one of the following each clock cycle: one 32 x 32 bit multiply, two 16 x 16 bit multiplies, two 16 x 32 bit multiplies, four 8 x 8 bit multiplies, four 8 x 8 multiplies with add operations and four 16 x 16 multiplies with add/subtract capabilities (including a complex multiply). There is also support for Galois filed multiplication for 8-bit and 32-bit data. Many communications algorithms such FFTs and modems require complex multiplication. The complex multiply (CMPY) instruction takes four 16-bit inputs and produces a 32-bit real and a 32-bit imaginary output. There are also complex multiplies with rounding capability that produces one 32-bit packed output that contain 16-bit real and 16-bit imaginary values. The 32 x 32 bit multiply instructions provide the extended precision necessary for audio and other high-precision algorithms on a variety of signed and unsigned 32-bit data types.

The .L or arithmetic logic unit now incorporates the ability to do parallel add/subtract operations on a pair of common inputs. Versions of this instruction exist to work on 32-bit data or on pairs of 16-bit data performing dual 16-bit add and subtracts in parallel. There are also saturated forms of these instructions.

The C64x+ core enhances the .S unit in several ways. In the C64x core, dual 16-bit MIN2 and MAX2 comparisons were only available on the .L units. On the C64X+ core, they are also available on the .S unit which increases the performance of algorithms that do searching and sorting. Finally, to increase data packing and unpacking throughput, the .S unit allows sustained high performance for the quad 8-bit/16-bit and dual 16-bit instructions. Unpack instructions prepare 8-bit data for parallel 16-bit operations. Pack instructions return parallel results to output precision including saturation support.

Other new features include:

- **SPLOOP** - a small instruction buffer in the CPU that aids in creation of software pipelining loops where multiple iterations of a loop are executed in parallel. The SPLOOP buffer reduces the code size associated with software pipelining. Furthermore, loops in the SPLOOP buffer are fully interruptible.
- **Compact Instructions** - The native instruction size of the C6000 devices is 32 bits. Many common instructions such as MPY, AND, OR, ADD, and SUB can be expressed as 16 bits if the C64x+ compiler can restrict the code to use certain registers in the register file. This compression is performed by the code generation tools.

Copyright © 2008–2011, Texas Instruments Incorporated

- **Instruction Set Enhancements** - As noted above, there are new instructions such as 32-bit multiplications, complex multiplications, packing, sorting, bit manipulation, and 32-bit Galois field multiplication.
- **Exception Handling** - Intended to aid the programmer in isolating bugs. The C64x+ CPU is able to detect and respond to exceptions, both from internally detected sources (such as illegal op-codes) and from system events (such as watchdog time expiration).
- **Privilege** - Defines user and supervisor modes of operation, allowing the operating system to give a basic level of protection to sensitive resources. Local memory is divided into multiple pages, each with read, write, and execute permissions.
- **Time-Stamp Counter** - Primarily targeted for real-time operating system (RTOS) robustness, a free-running time-stamp counter is implemented in the CPU that is *not* sensitive to system stalls.

For more details on the C64x+ CPU and its enhancements over the C64x architecture, see the following documents:

- *TMS320C64x/C64x+ DSP CPU and Instruction Set Reference Guide* (literature number SPRU732)
- *TMS320C64x+ DSP Cache User's Guide* (literature number SPRU862)
- *TMS320C64x+ Megamodule Reference Guide* (literature number SPRU871)
- *TMS320C64X to TMS320C64x+ CPU Migration Guide* (literature number SPRAA84)

Copyright © 2008–2011, Texas Instruments Incorporated

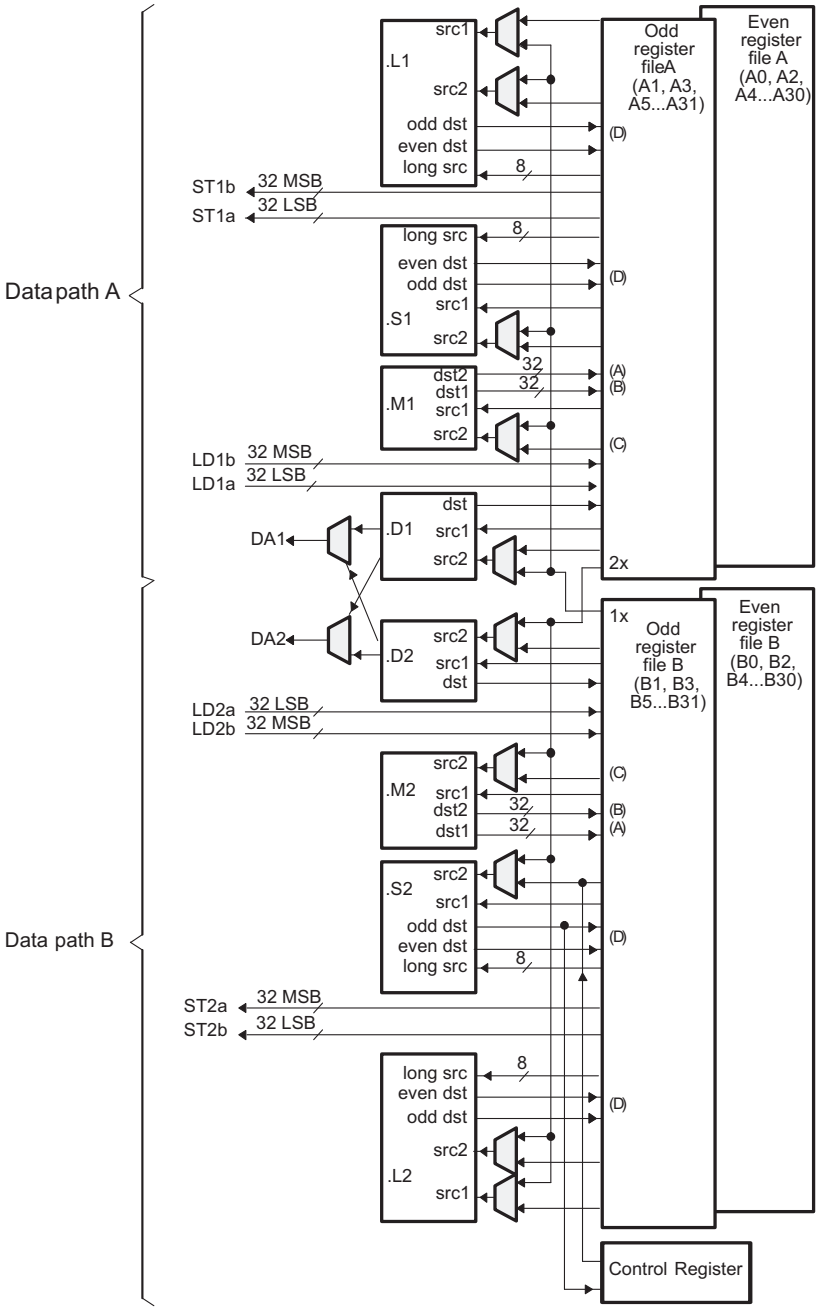

A. On .M unit, dst2 is 32 MB.
B. On .M unit, dst1 is 32 LSB.
C. On 64x+ CPU .M unit, src2 is 32 bits; on C64x+ CPU .M unit, src2 is 64 bits.
D. On .L and .S units, odd dst connects to odd register files and even dst connects to even register files.

Figure 2-1. TMS320C64x+TM CPU (DSP Core) Data Path

2.3 Memory Map Summary

Table 2-2 shows the memory map address of the C6474 device. For more information about the registers in these address ranges, click on the links in the table. The external memory configuration register address ranges in the C6474 device begin at the hex address location 0x7000 for DDR2 Memory Controller.

Table 2-2. Memory Map Summary

HEX ADDRESS RANGE		SIZE	MEMORY BLOCK DESCRIPTION		
START	END		C64x+ MEGAMODULE CORE 0	C64x+ MEGAMODULE CORE 1	C64x+ MEGAMODULE CORE 2
Internal RAM					
0000 0000	007F FFFF	8M	Reserved		
0080 0000	0087 FFFF	512K	L2 SRAM		
0088 0000	008F FFFF	512K			
009 00000	0097 FFFF	512K	Reserved		
0098 0000	009F FFFF	512K	Reserved		
00A0 0000	00DF FFFF	4M	Reserved		
00E0 0000	00E0 7FFF	32K	L1P SRAM		
00E0 8000	00EF FFFF	1M - 32K	Reserved		
00F0 0000	00F0 7FFF	32K	L1D SRAM		
00F0 8000	00FF FFFF	1M - 32K	Reserved		
0100 0000	01BF FFFF	4M	C64x+ Megamodule Registers		
01C0 0000	027F FFFF	12.5M	Reserved		
Control Registers on CFG SCR					
0280 0000	0280 03FF	1K	Frame Synchronization (FSYNC)		
0280 0400	0287 FFFF	511K	Reserved		
0288 0000	0288 00FF	256	Chip Interrupt Controller 0 (CIC0)		
0288 0100	0288 01FF	256	Chip Interrupt Controller 1 (CIC1)		
0288 0200	0288 02FF	256	Chip Interrupt Controller 2 (CIC2)		
0288 0300	0288 03FF	256	Chip Interrupt Controller 3 (CIC3)		
0288 0400	0288 0403	4	DSP Trace Formatter 1 (DTF1)		
0288 0404	0288 0407	4	DSP Trace Formatter 2 (DTF2)		
0288 0408	0288 040B	4	DSP Trace Formatter 3 (DTF3)		
0288 040C	0288 07FF	1K- 6	Reserved		
0288 0800	0288 0BFF	1K	CFGC		
0288 0900	0288 0903	4B	IPCGR0		
0288 0904	0288 0907	4B	IPCGR1		
0288 0908	0288 090B	4B	IPCGR2		
0288 090C	0288 093F	52B	Reserved		
0288 0940	0288 0943	4B	IPCAR0		
0288 0944	0288 0947	4B	IPCAR1		
0288 0948	0288 094B	4B	IPCAR2		
0288 0C00	028B FFFF	253K	Reserved		
028C 0000	028C 00FF	256	McBSP0		
028C 0100	028C FFFF	64K - 256	Reserved		
028D 0000	208D 00FF	256	McBSP1		
028D 0100	028D FFFF	64K - 256	Reserved		
028E 0000	028F FFFF	128K	Reserved		
0290 0000	0290 003F	64	Timer Pin Manager (TPMGR)		
0290 0040	0290 FFFF	64K - 64	Reserved		
0291 0000	0291 003F	64	Timer0		
0291 0040	0291 FFFF	64K - 64	Reserved		
0292 0000	0292 003F	64	Timer1		
0292 0040	0292 FFFF	64K - 64	Reserved		
0293 0000	0293 003F	64	Timer2		
0293 0040	0293 FFFF	64K - 64	Reserved		
0294 0000	0294 003F	64	Timer3		
0294 0040	0294 FFFF	64K - 64	Reserved		

Copyright © 2008–2011, Texas Instruments Incorporated

HEX ADDRESS RANGE		SIZE	MEMORY BLOCK DESCRIPTION		
START	END		C64x+ MEGAMODULE CORE 0	C64x+ MEGAMODULE CORE 1	C64x+ MEGAMODULE CORE 2
0295 0000	0295 003F	64	Timer4		
0295 0040	0295 FFFF	64K - 64	Reserved		
0296 0000	0296 003F	64	Timer5		
0296 0040	0296 FFFF	256K - 64	Reserved		
029A 0000	029A 01FF	512	PLL Controller 1 (Main)		
029A 0200	029B FFFF	128K - 512	Reserved		
029C 0000	029C 01FF	512	Reserved		
029C 0200	029C 02FF	256K - 512	Reserved		
02A0 0000	02A0 7FFF	32K	EDMA3 Channel Controller (TPCC)		
02A0 8000	02A1 FFFF	96K	Reserved		
02A2 0000	02A2 7FFF	32K	EDMA3 Transfer Controller 0 (TPTC0)		
02A2 8000	02A2 FFFF	32K	EDMA3 Transfer Controller 1 (TPTC1)		
02A3 0000	02A3 7FFF	32K	EDMA3 Transfer Controller 2 (TPTC2)		
02A3 8000	02A3 FFFF	32K	EDMA3 Transfer Controller 3 (TPTC3)		
02A4 0000	02A4 7FFF	32K	EDMA3 Transfer Controller 4 (TPTC4)		
02A4 8000	02A4 FFFF	32K	EDMA3 Transfer Controller 5 (TPTC5)		
02A5 0000	02A7 FFFF	192K	Reserved		
02A8 0000	02A8 00FF	256	Reserved		
02A8 0100	02AB FFFF	256K - 256	Reserved		
02AC 0000	02AC 0FFF	4K	Power/Sleep Controller (PSC)		
02AC 1000	02AC 3FFF	12K	Reserved		
02AC 4000	02AC 40FF	256	Reserved		
02AC 4100	02AC FFFF	48K - 256	Reserved		
02AD 0000	02AD 7FFF	32K	Embedded Trace Buffer 0 (ETB0)		
02AD 8000	02AD FFFF	32K	Embedded Trace Buffer 1 (ETB1)		
02AE 0000	02AE 7FFF	32K	Embedded Trace Buffer 2 (ETB2)		
02AE 8000	02AF FFFF	96K	Reserved		
02B0 0000	02B0 00FF	256	GPIO		
02B0 0100	02B0 1FFF	8K - 256	Reserved		
02B0 2000	02B0 23FF	1K	Reserved		
02B0 2400	02B0 3FFF	7K	Reserved		
02B0 4000	02B0 407F	128	I2C Data and Control		
02B0 4080	02B3 FFFF	256K - 128	Reserved		
02B4 0000	02B4 07FF	2K	Semaphore		
02B4 0800	02B7 FFFF	254K	Reserved		
02B8 0000	02B8 00FF	256	VCP2 Control		
02B8 0100	02B8 FFFF	128K - 256	Reserved		
02BA 0000	02BA 00FF	256	TCP2 Control		
02BA 0100	02BB FFFF	128K - 256	Reserved		
02BC 0000	02BF FFFF	256K	Antenna Interface Control		
02C0 0000	02C0 03FF	1K	Reserved		
02C0 0400	02C3 FFFF	255K	Reserved		
02C4 0000	02C4 00FF	256	SMGII Control		
02C4 0100	02C7 FFFF	256K - 256	Reserved		
02C8 0000	02C8 07FF	2K	EMAC Control		
02C8 0800	02C8 0FFF	2K	Reserved		
02C8 1000	02C8 10FF	256	EMAC Interrupt Controller		
02C8 1100	02C8 17FF	2K - 256	Reserved		
02C8 1800	02C8 18FF	256	MDIO		
02C8 1900	02C8 FFFF	2K - 256	Reserved		
02C8 2000	02C8 3FFF	8K	EMAC Descriptor Memory		
02C8 4000	02CF FFFF	496K	Reserved		
02D0 0000	02D2 0FFF	132K	RapidIO		
02D2 1000	02D3 FFFF	124K	Reserved		
02D4 0000	02D7 FFFF	256K	Reserved		
02D8 0000	02DB FFFF	256K	Reserved		

Copyright © 2008–2011, Texas Instruments Incorporated

HEX ADDRESS RANGE		SIZE	MEMORY BLOCK DESCRIPTION		
START	END		C64x+ MEGAMODULE CORE 0	C64x+ MEGAMODULE CORE 1	C64x+ MEGAMODULE CORE 2
02DC 0000	02DF FFFF	256K	Reserved		
02E0 0000	02E0 3FFF	16K	RapidIO Descriptor Memory		
02E0 4000	02EF FFFF	1M - 16K	Reserved		
02F0 0000	02F0 FFFF	64K	Reserved		
02F1 0000	02F1 FFFF	64K	Reserved		
02F2 0000	02F3 FFFF	128K	Reserved		
02F4 0000	02F5 FFFF	128K	Reserved		
02F6 0000	02FF FFFF	576K	Reserved		
Reserved					
0300 0000	03FF FFFF	16M	Reserved		
0400 0000	0FFF FFFF	192M	Reserved		
Global Ram					
1000 0000	107F FFFF	8M	Reserved		
1080 0000	1087 FFFF	512K	C64x+ Megamodule Core 0 L2 RAM		
1088 0000	108F FFFF	512K			
1090 0000	1097 FFFF	512K	Reserved		
1098 0000	109F FFFF	512K	Reserved		
10A0 0000	10DF FFFF	4M	Reserved		
10E0 0000	10E0 7FFF	32K	C64x+ Megamodule Core 0 L1P SRAM		
10E0 8000	10EF FFFF	1M - 32K	Reserved		
10F0 0000	10F0 7FFF	32K	C64x+ Megamodule Core 0 L1D SRAM		
10F0 8000	10FF FFFF	1M - 32K	Reserved		
1100 0000	117F FFFF	8M	Reserved		
1180 0000	1187 FFFF	512K	C64x+ Megamodule Core 1 L2 SRAM		
1188 0000	118F FFFF	512K			
1190 0000	1197 FFFF	512K	Reserved		
1198 0000	119F FFFF	512K	Reserved		
11A0 0000	11DF FFFF	4M	Reserved		
11E0 0000	11E0 7FFF	32K	C64x+ Megamodule Core 1 L1P SRAM		
11E0 8000	11EF FFFF	1M - 32K	Reserved		
11F0 0000	11F0 7FFF	32K	C64x+ Megamodule Core 1 L1D SRAM		
11F0 8000	11FF FFFF	1M - 32K	Reserved		
1200 0000	127F FFFF	8M	Reserved		
1280 0000	1287 FFFF	512K	C64x+ Megamodule Core 2 L2 SRAM		
1288 0000	128F FFFF	512K			
1290 0000	1297 FFFF	512K	Reserved		
1298 0000	129F FFFF	512K	Reserved		
12A0 0000	12DF FFFF	4M	Reserved		
12E0 0000	12E0 7FFF	32K	C64x+ Megamodule Core 2 L1P SRAM		
12E0 8000	12EF FFFF	1M - 32K	Reserved		
12F0 0000	12F0 7FFF	32K	C64x+ Megamodule Core 2 L1D SRAM		
12F0 8000	12FF FFFF	1M - 32K	Reserved		
1300 0000	1FFF FFFF	208M	Reserved		
Data Space on EDMA SCR					
2000 0000	2FFF FFFF	256M	Reserved		
3000 0000	3000 00FF	256	McBSP0 Data		
3000 0100	33FF FFFF	64M - 256	Reserved		
3400 0000	3400 00FF	256	McBSP1 Data		
3400 0100	3BFF FFFF	128M - 256	Reserved		
3C00 0000	3C00 FFFF	64K	L3 ROM		
3C01 0000	3FFF FFFF	64M - 64K	Reserved		
4000 0000	4FFF FFFF	256M	Reserved		
5000 0000	500F FFFF	1M	TCP2 Data		
5010 0000	57FF FFFF	127M	Reserved		
5800 0000	5800 FFFF	64K	VCP2 Data		
5801 0000	5FFF FFFF	128M 64K	Reserved		

Copyright © 2008–2011, Texas Instruments Incorporated

HEX ADDRESS RANGE		SIZE	MEMORY BLOCK DESCRIPTION		
START	END		C64x+ MEGAMODULE CORE 0	C64x+ MEGAMODULE CORE 1	C64x+ MEGAMODULE CORE 2
6000 0000	603F FFFF	4M	Reserved		
6040 0000	6FFF FFFF	252M	Reserved		
7000 0000	7000 00FF	256	DDR2 EMIF Configuration		
7000 0100	7FFF FFFF	256M - 256	Reserved		
8000 0000	9FFF FFFF	512M	DDR2 EMIF Data		
A000 0000	AFFF FFFF	256M	AIF Data		
B000 0000	BFFF FFFF	256m	Reserved		
C000 0000	CFFF FFFF	256m	Reserved		
D000 0000	DFFF FFFF	256m	Reserved		
E000 0000	EFFF FFFF	256m	Reserved		
F000 0000	FFFF FFFF	256m	Reserved		

2.4 Boot Sequence

The boot sequence is a process by which the DSP's internal memory is loaded with program and data sections. The DSP's internal registers are programmed with predetermined values. The boot sequence is started automatically after each power-on reset, warm reset, and system reset. A local reset to an individual C64x+ Megamodule should not affect the state of the hardware boot controller on the device. For more details on the initiators of the resets, see Section 7.7, *Reset Controller*.

The C6474 device supports several boot processes begins execution at the ROM base address, which contains the bootloader code necessary to support various device boot modes. The boot processes are software driven; using the BOOTMODE[3:0] device configuration inputs to determine the software configuration that must be completed.

2.4.1 Boot Modes Supported

The device supports several boot processes, which leverage the internal boot ROM. Most boot processes are software driven, using the BOOTMODE[3:0] device configuration inputs to determine the software configuration that must be completed. From a hardware perspective, there are three possible boot modes:

- No Boot (BOOTMODE[3:0] = 0000b)

  With no boot, the CPU executes directly from the internal L2 RAM located at address 0x80 0000. **Note:** Device operations are undefined if invalid code is located at address 0x80 0000. This boot mode is a hardware boot mode.

- Public ROM Boot

  The C64x+ Megamodule Core 0 is released from reset and begins executing from the L3 ROM base address. C64x+ Megamodule Core 0 is responsible for performing the boot process (e.g., from I2C ROM, Ethernet, or RapidIO), after which C64x+ Megamodule Core 0 brings the other C64x+ megamodule cores out of reset by setting to 1 the EVTPULSE4 bit (bit 4) of the C64x+ Megamodule Core 0's EVTASRT register. This process is valid only once: writing 1, then writing 1 again will not bring Core 1 and 2 out of reset again. Then, the C64x+ Megamodule Core 0 begins execution from the entry address defined in the boot table. The C64x+ Megamodule Core 1 and 2 begin execution from their L2 RAMs' base address.

The boot process performed by C64x+ Megamodule Core 0 in public ROM boot is determined by the BOOTMODE[3:0] value in the DEVSTAT register. C64x+ Megamodule Core 0 reads this value, and then executes the associated boot process in software.

Copyright © 2008–2011, Texas Instruments Incorporated

Table 2-3. C6474 Supported Boot Modes

MODE NAME	BOOTMODE[3:0]	DESCRIPTION
No Boot	0000b	No Boot (BOOTMODE[3:0] = 0000b)
I2C Master Boot A	0001b	Slave I2C address is 0x50. C64x+ Megamodule Core 0 configures I2C, acts as a master to the I2C bus and copies data from an I2C EEPROM or a device acting as an I2C slave to the DSP using a predefined boot table format. The destination address and length are contained within the boot table. After boot table copy is complete, the C64x+ Megamodule Core 0 brings the other C64x+ Megamodule Cores out of reset by setting to 1 the EVTPULSE4 bit (bit 4) of the C64x+ Megamodule Core EVTASRT register.
I2C Master Boot B	0010b	Similar to I2C boot A except the slave I2C address is 0x51.
I2C Slave Boot	0011	The C64x+ Megamodule Core 0 configures I2C and acts as a slave and will accept data and code section packets through the I2C interface. It is required that an I2C master in present in the system.
EMAC Master Boot	0100b	TI Ethernet Boot, C64x+ Megamodule Core 0 configures EMAC0 and EDMA, if required, and brings the code image into the internal on-chip memory via the protocol defined by the boot method (EMAC bootloader). After initializing the on-chip memory to the known state, C64x+ Megamodule Core 0 brings the other C64x+ Megamodule Cores out of reset.
EMAC Slave Boot	0101b	
EMAC Forced-Mode Boot	0110b	
Reserved	0111b	Reserved
Serial RapidIO Boot (Config 0)	1000b	The C64x+ Megamodule Core 0 configures the SRIO and an external host loads the application via SRIO peripheral, using directIO protocol. A doorbell interrupt is used to indicate that the code has been loaded. For more details on the Serial RapidIO configurations, see Table 2-4.
Serial RapidIO Boot (Config 1)	1001b	
Serial RapidIO Boot (Config 2)	1010b	
Serial RapidIO Boot (Config 3)	1011b	

C64x+ Megamodule Core 0 configures Serial RapidIO and EDMA, if required, and brings the code image into the internal on-chip memory via the protocol defined by the boot method (SRIO bootloader) and then C64x+ Megamodule Core 0 brings the other C64x+ Megamodule Cores out of reset. Note that SRIO boot modes are only supported on port 0.

Table 2-4. Serial RapidIO (SRIO) Supported Boot Modes

SRIO BOOT MODE	SERDES CLOCK	LINK RATE	BOOTMODE[3:0]
Bootmode 8 - Config 0	125 MHz	1.25 Gbps	1000b
Bootmode 9 - Config 1	125 MHz	3.125 Gbps	1001b
Bootmode 10 - Config 2	156.25 MHz	1.25 Gbps	1010b
Bootmode 11 - Config 3	156.25 MHz	3.125 Gbps	1011b

All the other BOOTMODE[3:0] modes are reserved.

2.4.2 Second-Level Bootloaders

Any of the boot modes can be used to download a second-level bootloader. A second-level bootloader allows for any level of customization to current boot methods as well as the definition of a completely customized boot.

Copyright © 2008–2011, Texas Instruments Incorporated

2.5 Pin Assignments

2.5.1 Pin Map

Figure 2-2 through Figure 2-5 show the C6474 pin assignments in four quadrants (A, B, C, and D).

	1	2	3	4	5	6	7	8	9	10	11	12	13	14	
AG	DV_{DD18}	V_{SS}	V_{SS}	V_{SS}	V_{SS}	CV_{DDMON}	$DV_{DD18MON}$	DV_{DD18}	AV_{DD118}	RSV04	AIF_V_{DDT11}	V_{SS}	AIFTXN4	AIFTXP4	AG
AF	V_{SS}	V_{SS}	V_{SS}	$\overline{RESETSTAT}$	DV_{DD18}	ALTFSYNC CLK	CORECLK SEL	V_{SS}	ALTCORE CLKP	ALTCORE CLKN	V_{SS}	AIFRXN5	AIFRXP5	V_{SS}	AF
AE	V_{SS}	V_{SS}	V_{SS}	RSV23	$\overline{POR}$	ALTFSYNC PULSE	RSV06	RSV07	SYSCLKP	SYSCLKN	V_{SS}	V_{SS}	AIFRXP4	AIFRXN4	AE
AD	V_{SS}	V_{SS}	TRT	SMFRAME CLK	$\overline{XWRST}$	SYSCLK OUT	FSYNC CLKP	FSYNC CLKN	FRAME BURSTP	FRAME BURSTN	V_{SS}	AIFTXP5	AIFTXN5	RSV02	AD
AC	DV_{DD18}	V_{SS}	GP15	TRTCLK	DV_{DD18}	V_{SS}	DV_{DD18}	V_{SS}	DV_{DD18}	V_{SS}	AIF_V_{DDT11}	AIF_V_{DDA11}	V_{SS}	AIF_V_{DDT11}	AC
AB	V_{SS}	GP13	GP12	GP11	V_{SS}										AB
AA	V_{SS}	GP09	GP10	GP14	DV_{DD18}										AA
Y	V_{SS}	DV_{DD18}	GP07	GP08	V_{SS}										Y
W	TMS	$\overline{TRST}$	TDO	TCK	DV_{DD18}				CV_{DD}	V_{SS}	CV_{DD}	V_{SS}	CV_{DD}	V_{SS}	W
V	GP02	GP05	GP06	TDI	V_{SS}				V_{SS}	CV_{DD}	V_{SS}	CV_{DD}	V_{SS}	CV_{DD}	V
U	DV_{DD18}	V_{SS}	GP03	GP01	DV_{DD18}				CV_{DD}	V_{SS}	CV_{DD}	V_{SS}	CV_{DD}	V_{SS}	U
T	EMU15	EMU11	GP00	GP04	V_{SS}				V_{SS}	CV_{DD}	V_{SS}	CV_{DD}	V_{SS}	CV_{DD}	T
R	EMU10	EMU01	EMU07	EMU00	DV_{DD18}				CV_{DD}	V_{SS}	CV_{DD}	V_{SS}	CV_{DD}	V_{SS}	R
	1	2	3	4	5	6	7	8	9	10	11	12	13	14	

Figure 2-2. C6474 Pin Map (Bottom View) [Quadrant A]

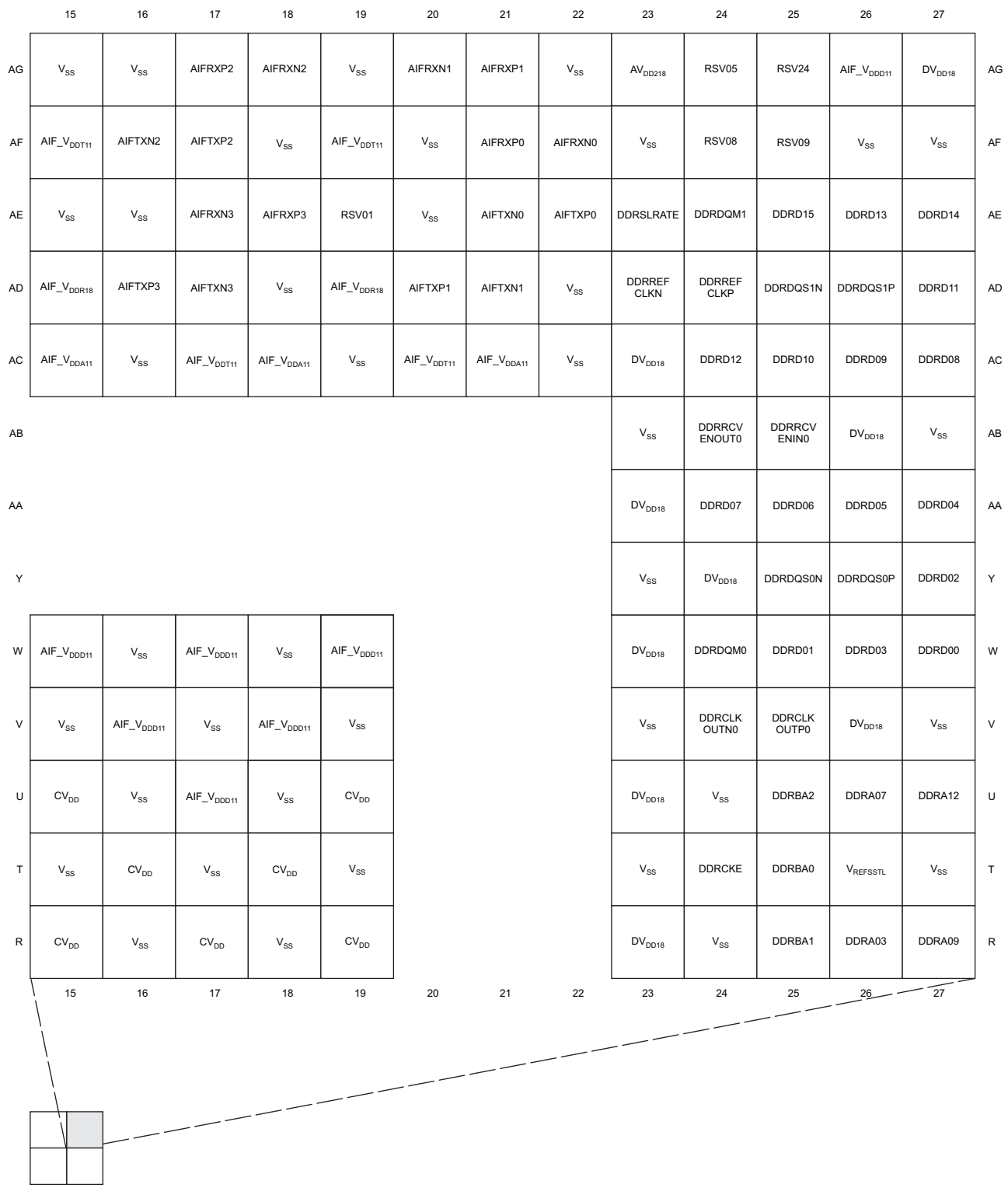

Figure 2-3. C6474 Pin Map (Bottom View) [Quadrant B]

Copyright © 2008–2011, Texas Instruments Incorporated



Figure 2-4. C6474 Pin Map (Bottom View) [Quadrant C]



Figure 2-5. C6474 Pin Map (Bottom View) [Quadrant D]

Copyright © 2008–2011, Texas Instruments Incorporated

2.6 Signal Groups Description

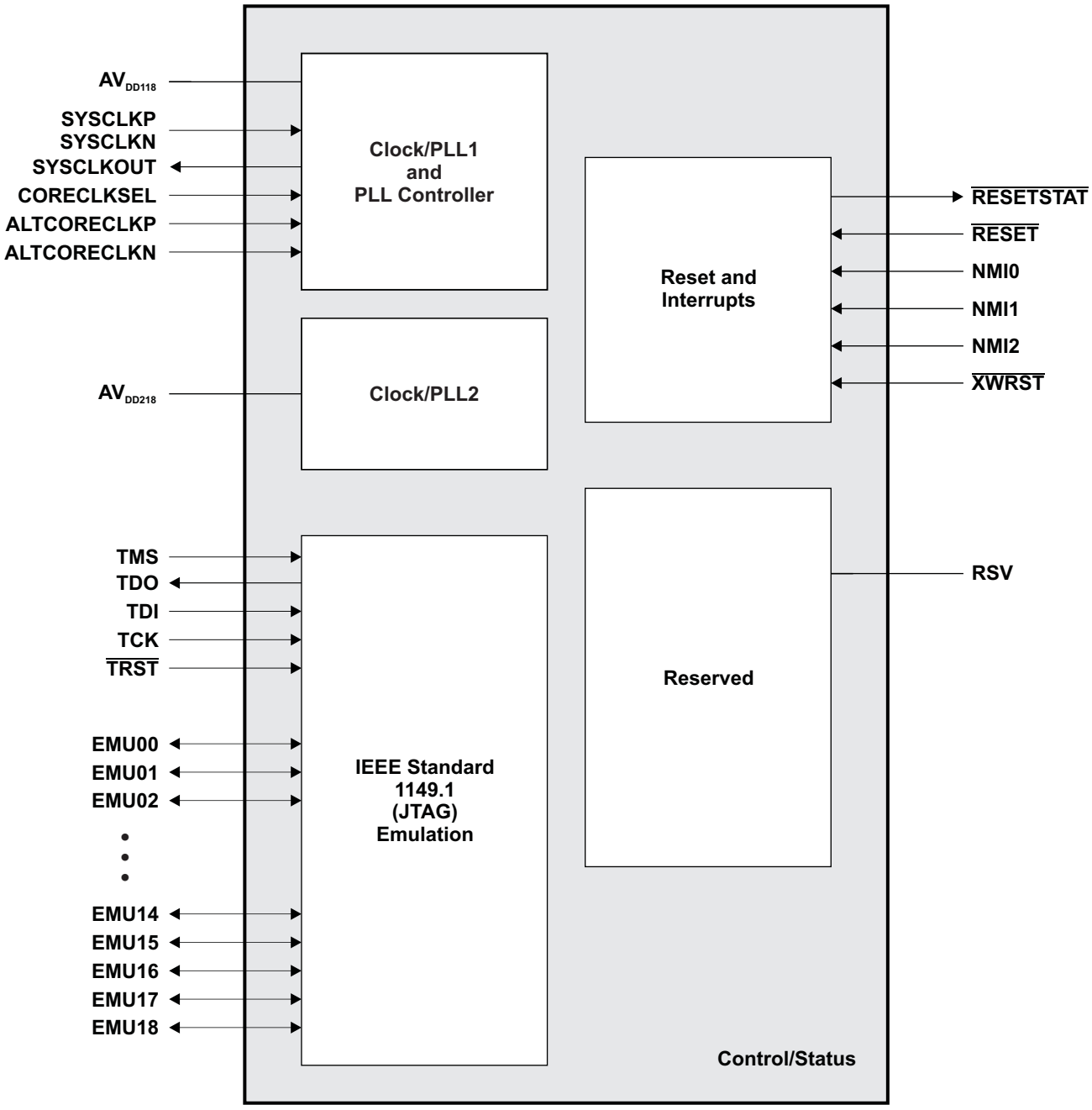

Figure 2-6. CPU and Peripheral Signals

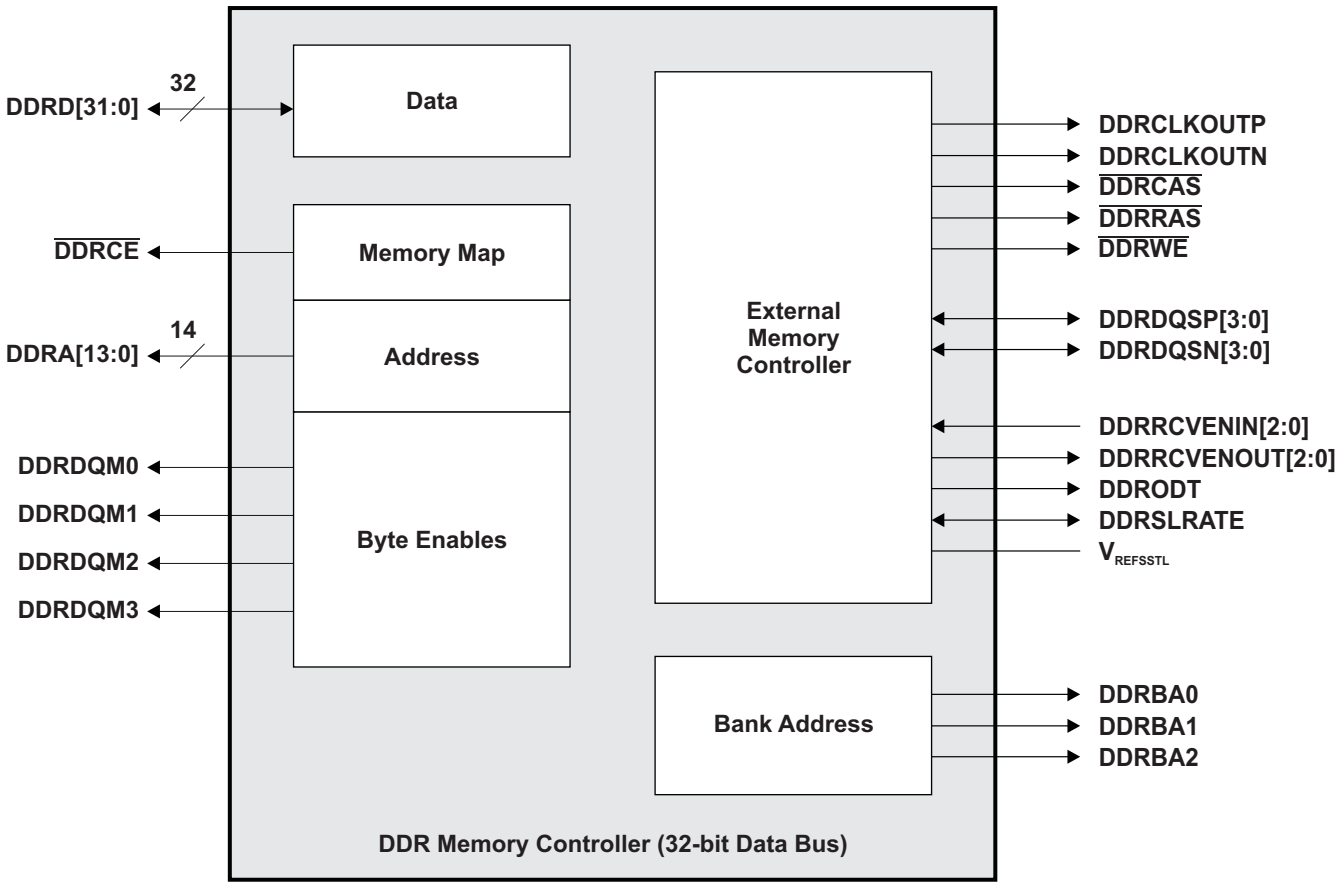

Figure 2-7. DDR Memory Controller Peripheral Signals

Copyright © 2008–2011, Texas Instruments Incorporated

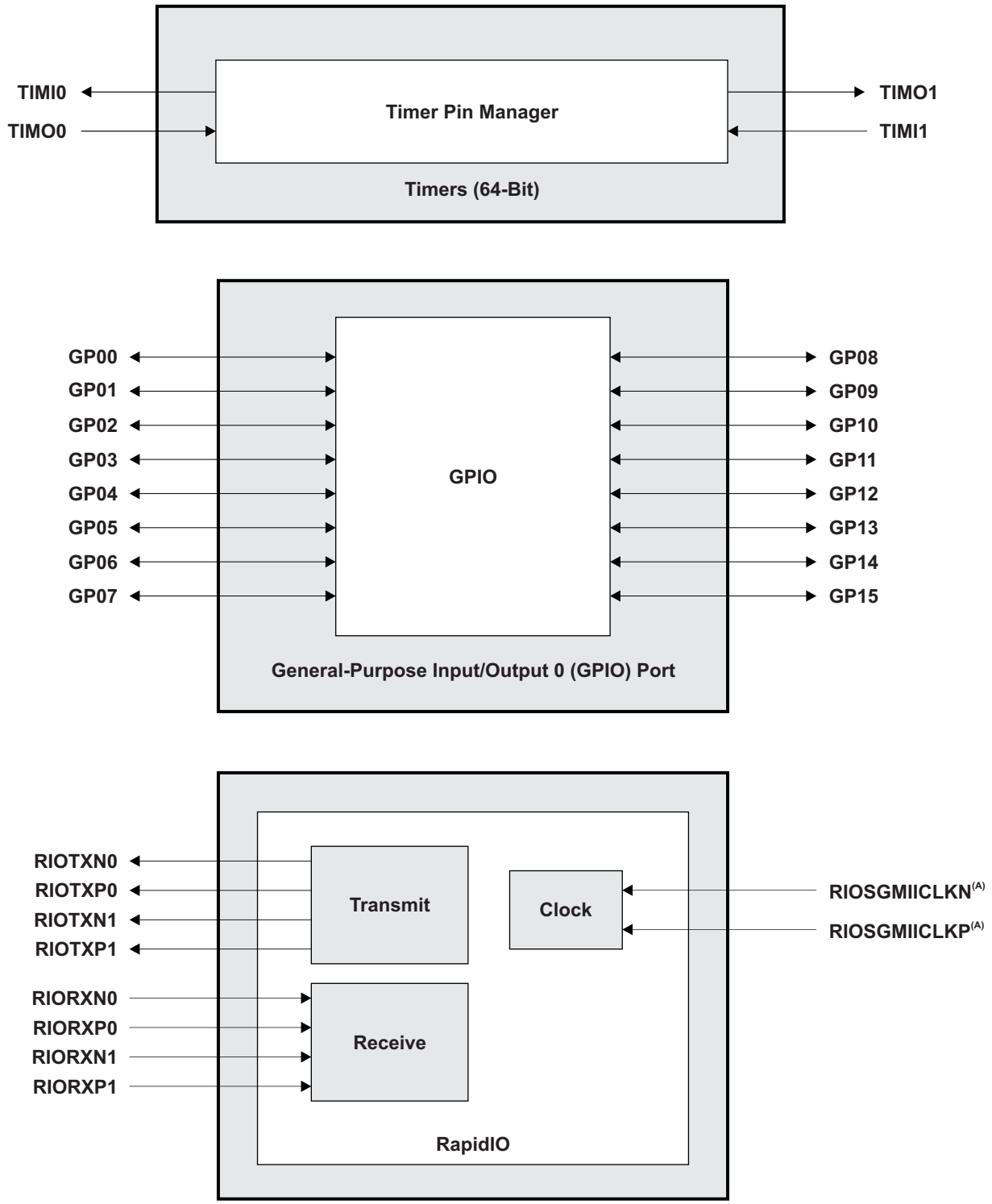

A. Reference Clock to drive RapidIO and SGMII.

Figure 2-8. Timers/GPIO/RapidIO Peripheral Signals

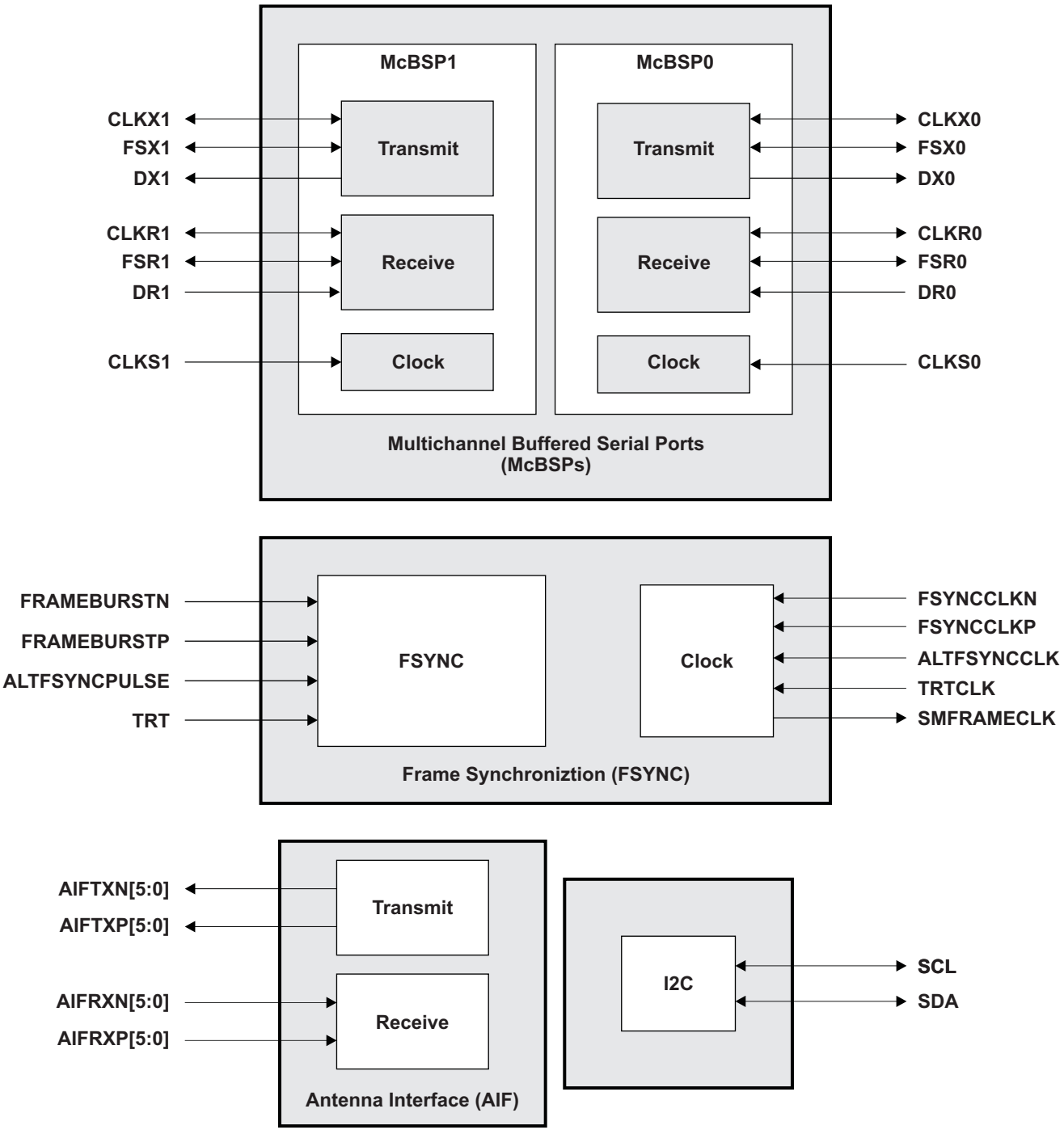

Figure 2-9. McBSP/FSYNC/AIF/I2C Peripheral Signals

Copyright © 2008–2011, Texas Instruments Incorporated

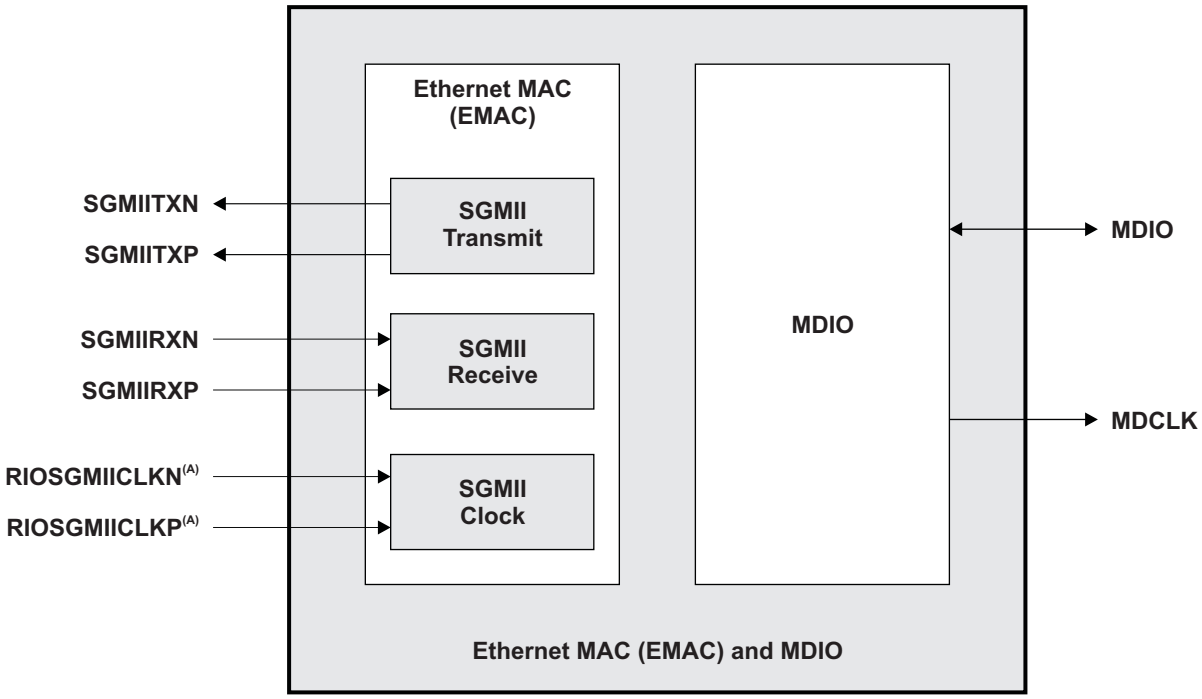

A. Reference Clock to drive RapidIO and SGMII.

Figure 2-10. EMAC/MDIO [SGMII] Peripheral Signals

2.7 Terminal Functions

The terminal functions table (Table 2-5) identifies the external signal names, the pin type (I, O, O/Z, or I/O/Z), whether the pin has any internal pullup/pulldown resistors, and the signal function description.

Table 2-5. Terminal Functions

SIGNAL NAME	SIGNAL NO.	TYPE(1)	IPD/IPU(2)	SIGNAL DESCRIPTION
ANTENNA INTERFACE				
AIFRXN0	AF22	I		Antenna Interface Receive Data (6 links)
AIFRXP0	AF21	I		
AIFRXN1	AG20	I		
AIFRXP1	AG21	I		
AIFRXN2	AG18	I		
AIFRXP2	AG17	I		
AIFRXN3	AE17	I		
AIFRXP3	AE18	I		
AIFRXN4	AE14	I		
AIFRXP4	AE13	I		
AIFRXN5	AF12	I		
AIFRXP5	AF13	I		
AIFTXN0	AE21	O		Antenna Interface Transmit Data (6 links)
AIFTXP0	AE22	O		
AIFTXN1	AD21	O		
AIFTXP1	AD20	O		
AIFTXN2	AF16	O		
AIFTXP2	AF17	O		
AIFTXN3	AD17	O		
AIFTXP3	AD16	O		
AIFTXN4	AG13	O		
AIFTXP4	AG14	O		
AIFTXN5	AD13	O		
AIFTXP5	AD12	O		
CLOCK/RESETS				
NMI0	J4	I	IPD	Non-maskable interrupts. NMI0, NMI1, and NMI2 pins are mapped to C64x+ Megamodule Core 0, C64x+ Megamodule Core 1, and C64x+ Megamodule Core 2, respectively. NMIs are edge-driven (rising edge). Any noise on the NMI pin may trigger an NMI interrupt; therefore, if the NMI pin is not used, it is recommended that the NMI pin be grounded rather than relying on the IPD.
NMI1	J2	I	IPD	
NMI2	J1	I	IPD	
$\overline{\text{XWRST}}$	AD5	I		Warm Reset
$\overline{\text{RESETSTAT}}$	AF4	O		Reset Status Output
$\overline{\text{POR}}$	AE5	I		Power-on Reset
SYSCLKP	AE9	I		System Clock Input to Antenna Interface and main PLL (Main PLL optional vs ALTCORECLK)
SYSCLKN	AE10	I		
ALTCORECLKN	AF10	I		Alternate Core Clock Input to main PLL (vs SYSCLK)
ALTCORECLKP	AF9	I		
DDRREFCLKN	AD23	I		DDR Reference Clock Input to DDR PLL
DDRREFCLKP	AD24	I		
SYSCLKOUT	AD6	O/Z	IPD	System Clock Output to be used as a general purpose output clock for debug purposes

(1) I = Input, O = Output, Z = High impedance, S = Supply voltage, GND = Ground, A = Analog signal
(2) IPD = internal pulldown, IPU = internal pullup. All internal pullups and pulldowns are 100 µA.

Copyright © 2008–2011, Texas Instruments Incorporated

Table 2-5. Terminal Functions (continued)

SIGNAL NAME	SIGNAL NO.	TYPE[1]	IPD/IPU[2]	SIGNAL DESCRIPTION
CORECLKSEL	AF7	I		Core Clock Select to select between SYSCLK(N|P) and ALTCORECCLK to the main PLL
RIOSGMIICLKN	D9	I		RapidIO/SGMII Reference Clock to drive the RapidIO and SGMII SERDES
RIOSGMIICLKP	C9	I		
DDR MEMORY CONTROLLER				
DDRDQM0	W24	O/Z		DDR2 EMIF Data Masks
DDRDQM1	AE24	O/Z		
DDRDQM2	B24	O/Z		
DDRDQM3	H24	O/Z		
$\overline{\text{DDRCE}}$	L24	O/Z		DDR2 EMIF Chip Enable
DDRBA0	T25	O/Z		DDR Bank Address
DDRBA1	R25	O/Z		
DDRBA2	U25	O/Z		
DDRA00	K25	O/Z		DDR2 EMIF Address Bus
DDRA01	N25	O/Z		
DDRA02	M25	O/Z		
DDRA03	R26	O/Z		
DDRA04	L25	O/Z		
DDRA05	N27	O/Z		
DDRA06	L26	O/Z		
DDRA07	U26	O/Z		
DDRA08	K26	O/Z		
DDRA09	R27	O/Z		
DDRA10	P25	O/Z		
DDRA11	L27	O/Z		
DDRA12	U27	O/Z		
DDRA13	K27	O/Z		
DDRCLKOUTP0	V25	O/Z		DDR2 EMIF Output Clocks to drive SDRAMs (one clock pair per SDRAM)
DDRCLKOUTN0	V24	O/Z		
DDRCLKOUTP1	J25	O/Z		
DDRCLKOUTN1	J24	O/Z		

Copyright © 2008–2011, Texas Instruments Incorporated

Table 2-5. Terminal Functions (continued)

SIGNAL NAME	SIGNAL NO.	TYPE[1]	IPD/IPU[2]	SIGNAL DESCRIPTION
DDRD00	W27	I/O/Z		DDR2 EMIF Data Bus
DDRD01	W25	I/O/Z		
DDRD02	Y27	I/O/Z		
DDRD03	W26	I/O/Z		
DDRD04	AA27	I/O/Z		
DDRD05	AA26	I/O/Z		
DDRD06	AA25	I/O/Z		
DDRD07	AA24	I/O/Z		
DDRD08	AC27	I/O/Z		
DDRD09	AC26	I/O/Z		
DDRD10	AC25	I/O/Z		
DDRD11	AD27	I/O/Z		
DDRD12	AC24	I/O/Z		
DDRD13	AE26	I/O/Z		
DDRD14	AE27	I/O/Z		
DDRD15	AE25	I/O/Z		
DDRD16	B25	I/O/Z		
DDRD17	D25	I/O/Z		
DDRD18	B26	I/O/Z		
DDRD19	D24	I/O/Z		
DDRD20	B27	I/O/Z		
DDRD21	D26	I/O/Z		
DDRD22	D27	I/O/Z		
DDRD23	C27	I/O/Z		
DDRD24	F24	I/O/Z		
DDRD25	F25	I/O/Z		
DDRD26	F26	I/O/Z		
DDRD27	F27	I/O/Z		
DDRD28	G27	I/O/Z		
DDRD29	H25	I/O/Z		
DDRD30	H26	I/O/Z		
DDRD31	H27	I/O/Z		
$\overline{\text{DDRCAS}}$	N26	O/Z		DDR2 EMIF Column Address Strobe
$\overline{\text{DDRRAS}}$	M24	O/Z		DDR2 Row Address Strobe
$\overline{\text{DDRWE}}$	P24	O/Z		DDR2 EMIF Write Enable
DDRCKE	T24	O/Z		DDR2 EMIF Clock Enable
DDRDQS0P	Y26	I/O/Z		DDR2 EMIF Data Strobe
DDRDQS0N	Y25	I/O/Z		
DDRDQS1P	AD26	I/O/Z		
DDRDQS1N	AD25	I/O/Z		
DDRDQS2P	C26	I/O/Z		
DDRDQS2N	C25	I/O/Z		
DDRDQS3P	G25	I/O/Z		
DDRDQS3N	G26	I/O/Z		

Copyright © 2008–2011, Texas Instruments Incorporated

Table 2-5. Terminal Functions (continued)

SIGNAL NAME	SIGNAL NO.	TYPE(1)	IPD/IPU(2)	SIGNAL DESCRIPTION
DDRRCVENIN0	AB25	I		DDR2 EMIF Data Strobe Gate Input/Outputs to help meet DDR Timing
DDRRCVENOUT0	AB24	O/Z		
DDRRCVENIN1	E24	I		
DDRRCVENOUT1	E25	O/Z		
DDRODT	K24	O/Z		DDR2 EMIF On-Die Termination Outputs used to set termination on the SDRAMs The DDR2 ODT control register is found at 0x7000 00F0 Bits 1:0 are the ODT status, these bits are Read/Write: 00 - no termination 01- half termination 11 - full termination
DDRSLRATE	AE23	I		DDR2 Slew rate control
$V_{REFSSTL}$	T26	A		Reference Voltage Input for SSTL18 buffers used by DDR2 EMIF ($V_{DDS18/2}$)
JTAG EMULATION				
TCK	W4	I	IPU	JTAG Clock Input
TDI	V4	I	IPU	JTAG Data Input
TDO	W3	O/Z		JTAG Data Output
TMS	W1	I	IPU	JTAG Test Mode Input
$\overline{TRST}$	W2	I	IPD	JTAG Reset
EMU00	R4	I/O/Z	IPU	Emulation and Trace Port
EMU01	R2	I/O/Z	IPU	
EMU02	N3	I/O/Z	IPU	
EMU03	N1	I/O/Z	IPU	
EMU04	M2	I/O/Z	IPU	
EMU05	M1	I/O/Z	IPU	
EMU06	N4	I/O/Z	IPU	
EMU07	R3	I/O/Z	IPU	
EMU08	M4	I/O/Z	IPU	
EMU09	N2	I/O/Z	IPU	
EMU10	R1	I/O/Z	IPU	
EMU11	T2	I/O/Z	IPU	
EMU12	L3	I/O/Z	IPU	
EMU13	P4	I/O/Z	IPU	
EMU14	K2	I/O/Z	IPU	
EMU15	T1	I/O/Z	IPU	
EMU16	P3	I/O/Z	IPU	
EMU17	L4	I/O/Z	IPU	
EMU18	M3	I/O/Z	IPU	
FRAME SYNCHRONIZATION (FSYNC)				
FSYNCCLKN	AD8	I		Frame Sync Interface Clock used to drive the frame synchronization interface (OBSAI RP1 clock)
FSYNCCLKP	AD7	I		
SMFRAMECLK	AD4	O/Z	IPD	Frame Sync Clock Output
FRAMEBURSTN	AD10	I		Frame Burst to drive frame indicators to the frame synchronization module (OBSAI RP1)
FRAMEBURSTP	AD9	I		
ALTFSYNCCLK	AF6	I	IPD	Alternate Frame Sync Clock Input (vs FSYNCCLK(N|P)
ALTFSYNCPULSE	AE6	I	IPD	Alternate Frame Sync Input (vs FRAMEBURST (N|P)
TRT	AD3	I	IPD	Multi-standard Frame Synchronization Tick
TRTCLK	AC4	I	IPD	Multi-standard Frame Synchronization Clock

Copyright © 2008–2011, Texas Instruments Incorporated

Table 2-5. Terminal Functions (continued)

SIGNAL NAME	SIGNAL NO.	TYPE(1)	IPD/IPU(2)	SIGNAL DESCRIPTION
GENERAL PURPOSE INPUT/OUTPUT (GPIO)				
GP00	T3	I/O/Z	IPD	General Purpose Input/Output GPIO[3:0] are mapped to BOOTMODE[3:0] (see Section 2.4.1, *Boot Modes Supported*) GPIO4 is mapped to LENDIAN 0 = Big Endian 1 = Little Endian (default) GPIO5 is mapped to L2_CONFIG is a reserved bootstrap pin and should be pulled up to DV_{DD18} during bootstrap GPIO[7:6] are not multiplexed GPIO[11:8] are mapped to DEVNUM[3:0] (see Section 2.4.1, *Boot Modes Supported*) GPIO[15:12] are not multiplexed
GP01	U4	I/O/Z	IPD	
GP02	V1	I/O/Z	IPD	
GP03	U3	I/O/Z	IPD	
GP04	T4	I/O/Z	IPU	
GP05	V2	I/O/Z	IPD	
GP06	V3	I/O/Z	IPD	
GP07	Y3	I/O/Z	IPD	
GP08	Y4	I/O/Z	IPD	
GP09	AA2	I/O/Z	IPD	
GP10	AA3	I/O/Z	IPD	
GP11	AB4	I/O/Z	IPD	
GP12	AB3	I/O/Z	IPD	
GP13	AB2	I/O/Z	IPD	
GP14	AA4	I/O/Z	IPD	
GP15	AC3	I/O/Z	IPD	
I2C				
SCL	E4	I/O/Z		I2C Clock (open drain)
SDA	D4	I/O/Z		I2C Data (open drain)
MULTICHANNEL BUFFERED SERIAL PORT (McBSP)				
CLKS0	D20	I	IPD	McBSP0 Module Clock
CLKR0	B20	I/O/Z	IPD	McBSP0 Receive Clock
CLKX0	C20	I/O/Z	IPD	McBSP0 Transmit Clock
DR0	A20	I	IPD	McBSP0 Receive Data
DX0	D19	O/Z	IPD	McBSP0 Transmit Data
FSR0	B21	I/O/Z	IPD	McBSP0 Receive Frame Sync
FSX0	A21	I/O/Z	IPD	McBSP0 Transmit Frame Sync
CLKS1	A25	I	IPD	McBSP1 Module Clock
CLKR1	A24	I/O/Z	IPD	McBSP1 Receive Clock
CLKX1	C22	I/O/Z	IPD	McBSP1 Transmit Clock
DR1	D21	I	IPD	McBSP1 Receive Data
DX1	B22	O/Z	IPD	McBSP1 Transmit Data
FSR1	C21	I/O/Z	IPD	McBSP1 Receive Frame Sync
FSX1	A22	I/O/Z	IPD	McBSP1 Transmit Frame Sync
MISCELLANEOUS				
VCNTL0	G3	O		Voltage Control Outputs to variable core power supply (open-drain buffers) Note: These pins must be externally pulled up. For more infomation, see the *TMS320C6474 Hardware Design Guide* application report (literature number SPRAAW7).
VCNTL1	G2	O		
VCNTL2	H4	O		
VCNTL3	H3	O		
SERIAL RAPIDIO (SRIO)				
RIORXN0	A9	I		Serial RapidIO Receive Data (2 links)
RIORXP0	A10	I		
RIORXN1	A13	I		
RIORXP1	A12	I		

Copyright © 2008–2011, Texas Instruments Incorporated

Table 2-5. Terminal Functions (continued)

SIGNAL NAME	SIGNAL NO.	TYPE[1]	IPD/IPU[2]	SIGNAL DESCRIPTION
RIOTXN0	C11	O		Serial RapidIO Transmit data (2 links)
RIOTXP0	C10	O		
RIOTXN1	C13	O		
RIOTXP1	C14	O		
ETHERNET MAC (EMAC) AND SGMII				
SGMIIRXN	C16	I		Ethernet MAC SGMII Receive Data
SGMIIRXP	C17	I		
SGMIITXN	A16	O		Ethernet MAC SGMII Transmit Data
SGMIITXP	A15	O		
MANAGEMENT DATA INPUT/OUTPUT (MDIO)				
MDIO	B19	I/O/Z	IPU	MDIO Data
MDCLK	C19	O	IPD	MDIO Clock
TIMERS				
TIMI0	E3	I	IPD	Timer Inputs
TIMI1	C4	I	IPD	
TIMO0	F2	O/Z	IPD	Timer Outputs
TIMO1	F4	O/Z	IPD	
RESERVED				
RSV01	AE19	A		Reserved, unconnected
RSV02	AD14	A		Reserved, unconnected
RSV03	N24	A		Reserved, 45.3-Ω 1% resistor to GND
RSV04	AG10	A		Reserved, unconnected
RSV05	AG24	A		Reserved, unconnected
RSV06	AE7	O		Reserved, unconnected
RSV07	AE8	O		Reserved, unconnected
RSV08	AF24	O		Reserved, unconnected
RSV09	AF25	O		Reserved, unconnected
RSV10	K4	I/O/Z	IPU	Reserved, unconnected
RSV11	K3	I/O/Z	IPU	Reserved, unconnected
RSV12	K1	I/O/Z	IPU	Reserved, unconnected
RSV13	G4	O/Z	IPD	Reserved, unconnected
RSV14	F3	O/Z	IPD	Reserved, unconnected
RSV15	D7	A		Reserved, GND connection
RSV16	C7	A		Reserved, unconnected
RSV17	B12	A		Reserved, unconnected
RSV18	B18	A		Reserved, unconnected
RSV19	D6	I/O/Z	IPU	Reserved, unconnected
RSV20	C6	I/O/Z	IPU	Reserved, unconnected
RSV21	E6			Reserved, CV_{DD} connection
RSV22	E7			Reserved, CV_{DD} connection
RSV23	AE4	O/Z	IPD	Reserved, unconnected
RSV24	AG25	O/Z	IPD	Reserved, unconnected
RSV25	D22	A		Reserved, GND connection
RSV26	C23	A		Reserved, GND connection
RSV27	D5	A		Reserved, unconnected
RSV28	C5	A		Reserved, unconnected

Copyright © 2008–2011, Texas Instruments Incorporated

Table 2-5. Terminal Functions (continued)

SIGNAL NAME	SIGNAL NO.	TYPE(1)	IPD/IPU(2)	SIGNAL DESCRIPTION
RSV29	J3			Reserved, DV_{DD18} connection
SUPPLY VOLTAGE PINS				
CV_{DD}	J11	S		0.9 - 1.2-V Core Supply Voltage
	J17	S		
	J19	S		
	J9	S		
	K10	S		
	K18	S		
	L11	S		
	L13	S		
	L15	S		
	L17	S		
	L19	S		
	L9	S		
	M10	S		
	M12	S		
	M14	S		
	M16	S		
	M18	S		
	N11	S		
	N13	S		
	N15	S		
	N17	S		
	N19	S		
	N9	S		
	P10	S		
	P12	S		
	P14	S		
	P16	S		
	P18	S		
	R11	S		
	R13	S		
	R15	S		
	R17	S		
	R19	S		
	R9	S		
	T10	S		
	T12	S		
	T14	S		

Copyright © 2008–2011, Texas Instruments Incorporated

Table 2-5. Terminal Functions (continued)

SIGNAL NAME	NO.	TYPE[1]	IPD/IPU[2]	SIGNAL DESCRIPTION
CV_{DD}	T16	S		0.9 - 1.2-V Core Supply Voltage
	T18	S		
	U11	S		
	U13	S		
	U15	S		
	U19	S		
	U9	S		
	V10	S		
	V12	S		
	V14	S		
	W11	S		
	W13	S		
	W9	S		
AIF_V_{DDA11}	AC12	A		1.1-V AIF Serdes Analog Supply
	AC15	A		
	AC18	A		
	AC21	A		
SGR_V_{DDA11}	D12	A		1.1-V SRIO/SGMII Serdes Analog Supply
	D18	A		
	E11	A		
	E15	A		
AV_{DD218}	AG23	A		1.8-V PLL Supply
AV_{DD118}	AG9	A		
AIF _V_{DDD11}	AG26	S		1.1-V AIF Serdes Digital Supply
	U17	S		
	V16	S		
	V18	S		
	W15	S		
	W17	S		
	W19	S		
SGR_V_{DDD11}	J13	S		1.1-V SRIO/SGMII Serdes Digital Supply
	J15	S		
	K12	S		
	K14	S		
	K16	S		
CV_{DDMON}	AG6	S		0.9 - 1.2-V CV_{DD} Supply Monitor
AIF_V_{DDR18}	AD19	S		1.8-V AIF Serdes Regulator Supply
	AD15	S		
SGR_V_{DDR18}	C12	S		1.8-V SRIO/SGMII Serdes Regulator Supply
	A18	S		

Copyright © 2008–2011, Texas Instruments Incorporated

Table 2-5. Terminal Functions (continued)

SIGNAL NAME	SIGNAL NO.	TYPE[1]	IPD/IPU[2]	SIGNAL DESCRIPTION
DV_{DD18}	A1	S		1.8-V I/O Supply
	A19	S		
	A23	S		
	A27	S		
	A5	S		
	AA23	S		
	AA5	S		
	AB26	S		
	AC1	S		
	AC23	S		
	AC5	S		
	AC7	S		
	AC9	S		
	AF5	S		
	AG1	S		
	AG27	S		
	AG8	S		
	E1	S		
	E19	S		
	E21	S		
	E23	S		
	E27	S		
	E5	S		
	G23	S		
	G5	S		
	H2	S		
	J23	S		
	J27	S		
	J5	S		
	L1	S		
	L23	S		
	L5	S		
	M26	S		
	N23	S		
	N5	S		
	P2	S		
	P26	S		
	R23	S		
	R5	S		
	U1	S		
	U23	S		
	U5	S		
	V26	S		

Copyright © 2008–2011, Texas Instruments Incorporated

Table 2-5. Terminal Functions (continued)

SIGNAL NAME	SIGNAL NO.	TYPE[1]	IPD/IPU[2]	SIGNAL DESCRIPTION
DV_{DD18}	W23	S		1.8-V I/O Supply
	W5	S		
	Y2	S		
	Y24	S		
$DV_{DD18MON}$	AG7	S		1.8-V DV_{DD18} Supply Monitor
AIF_V_{DDT11}	AC11	S		1.1-V AIF Serdes Termination Supply
	AC14	S		
	AC17	S		
	AC20	S		
	AF15	S		
	AF19	S		
	AG11	S		
SGR_V_{DDT11}	B13	S		1.1-V SRIO/SGMII Serdes Termination Supply
	B17	S		
	B8	S		
	E13	S		
	E17	S		
	E9	S		

Copyright © 2008–2011, Texas Instruments Incorporated

Table 2-5. Terminal Functions (continued)

SIGNAL NAME	SIGNAL NO.	TYPE[1]	IPD/IPU[2]	SIGNAL DESCRIPTION
GROUND PINS				
V_{SS}	A11	GND		Ground
	A14			
	A17			
	A2			
	A26			
	A3			
	A4			
	A6			
	A7			
	A8			
	AA1			
	AB1			
	AB23			
	AB27			
	AB5			
	AC10			
	AC13			
	AC16			
	AC19			
	AC2			
	AC22			
	AC6			
	AC8			
	AD1			
	AD11			
	AD18			
	AD2			
	AD22			
	AE1			
	AE11			
	AE12			
	AE15			
	AE16			
	AE2			
	AE20			
	AE3			
	AF1			
	AF11			
	AF14			
	AF18			
	AF2			
	AF20			
	AF23			

Copyright © 2008–2011, Texas Instruments Incorporated

Table 2-5. Terminal Functions (continued)

SIGNAL NAME	SIGNAL NO.	TYPE[1]	IPD/IPU[2]	SIGNAL DESCRIPTION
	AF26			
	AF27			
	AF3			
	AF8			
	AG12			
	AG15			
	AG16			
	AG19			
	AG2			
	AG22			
	AG3			
	AG4			
	AG5			
	B1			
	B10			
	B11			
	B14			
	B15			
	B16			
	B2			
	B23			
V_{SS}	B3	GND		Ground
	B4			
	B5			
	B6			
	B7			
	B9			
	C1			
	C15			
	C18			
	C2			
	C24			
	C3			
	C8			
	D1			
	D10			
	D11			
	D13			
	D14			
	D15			
	D16			
	D17			
	D2			

Copyright © 2008–2011, Texas Instruments Incorporated

Table 2-5. Terminal Functions (continued)

SIGNAL NAME	SIGNAL NO.	TYPE[1]	IPD/IPU[2]	SIGNAL DESCRIPTION
	D23			
	D3			
	D8			
	E10			
	E12			
	E14			
	E16			
	E18			
	E2			
	E20			
	E22			
	E26			
	E8			
	F1			
	F23			
	F5			
	G1			
	G24			
	H1			
	H23			
	H5			
V_{SS}	J10	GND		Ground
	J12			
	J14			
	J16			
	J18			
	J26			
	K11			
	K13			
	K15			
	K17			
	K19			
	K23			
	K5			
	K9			
	L10			
	L12			
	L14			
	L16			
	L18			
	L2			
	M11			
	M13			

Copyright © 2008–2011, Texas Instruments Incorporated

Table 2-5. Terminal Functions (continued)

SIGNAL NAME	SIGNAL NO.	TYPE[1]	IPD/IPU[2]	SIGNAL DESCRIPTION
	M15			
	M17			
	M19			
	M23			
	M27			
	M5			
	M9			
	N10			
	N12			
	N14			
	N16			
	N18			
	P1			
	P11			
	P13			
	P15			
	P17			
	P19			
	P23			
	P27			
	P5			
V_{SS}	P9	GND		Ground
	R10			
	R12			
	R14			
	R16			
	R18			
	R24			
	T11			
	T13			
	T15			
	T17			
	T19			
	T23			
	T27			
	T5			
	T9			
	U10			
	U12			
	U14			
	U16			
	U18			
	U2			

Copyright © 2008–2011, Texas Instruments Incorporated

Table 2-5. Terminal Functions (continued)

SIGNAL NAME	SIGNAL NO.	TYPE[1]	IPD/IPU[2]	SIGNAL DESCRIPTION
V_{SS}	U24	GND		Ground
	V11			
	V13			
	V15			
	V17			
	V19			
	V23			
	V27			
	V5			
	V9			
	W10			
	W12			
	W14			
	W16			
	W18			
	Y1			
	Y23			
	Y5			

Copyright © 2008–2011, Texas Instruments Incorporated

2.8 Development and Device Support

2.8.1 Development Support

In case the customer would like to develop their own features and software on the C6474 device, TI offers an extensive line of development tools for the TMS320C6000 DSP platform, including tools to evaluate the performance of the processors, generate code, develop algorithm implementations, and fully integrate and debug software and hardware modules. The tool's support documentation is electronically available within the Code Composer Studio™ Integrated Development Environment (IDE). The following products support development of C6000 DSP-based applications:

Software Development Tools: Code Composer Studio Integrated Development Environment (IDE): including Editor C/C++/Assembly Code Generation, and Debug plus additional development tools Scalable, Real-Time Foundation Software (DSP/BIOS™), which provides the basic run-time target software needed to support any DSP application.

Hardware Development Tools: Extended Development System (XDS™) Emulator (supports C6000 DSP multiprocessor system debug) Evaluation Module (EVM).

2.8.2 Device Nomenclature

To designate the stages in the product development cycle, TI assigns prefixes to the part numbers of all DSP devices and support tools. Each DSP commercial family member has one of three prefixes: TMX, TMP, or TMS (e.g., TMS320C6474ZUN). Texas Instruments recommends two of three possible prefix designators for its support tools: TMDX and TMDS. These prefixes represent evolutionary stages of product development from engineering prototypes (TMX/TMDX) through fully qualified production devices/tools (TMS/TMDS).

Device development evolutionary flow:

- **TMX**: Experimental device that is not necessarily representative of the final device's electrical specifications.
- **TMP**: Final silicon die that conforms to the device's electrical specifications but has not completed quality and reliability verification.
- **TMS**: Fully qualified production device.

Support tool development evolutionary flow:

- **TMDX**: Development-support product that has not yet completed Texas Instruments internal qualification testing.
- **TMDS**: Fully qualified development-support product .

TMX and TMP devices and TMDX development-support tools are shipped with against the following disclaimer:

"Developmental product is intended for internal evaluation purposes."

TMS devices and TMDS development-support tools have been characterized fully, and the quality and reliability of the device have been demonstrated fully. TI's standard warranty applies.

Predictions show that prototype devices (TMX or TMP) have a greater failure rate than the standard production devices. Texas Instruments recommends that these devices not be used in any production system because their expected end-use failure rate still is undefined. Only qualified production devices are to be used.

Copyright © 2008–2011, Texas Instruments Incorporated

TI device nomenclature also includes a suffix with the device family name. This suffix indicates the package type (for example, ZUN), the temperature range (for example, Blank is the default commercial temperature range), and the device speed range in megahertz (for example, Blank is 1000 [1 GHz]). Figure 2-11 provides a legend for reading the complete device name for any TMS320C64x+ DSP generation member. For device part numbers and further ordering information for TMS320C6474 in the CUN, GUN, or ZUN package type, see the TI website (www.ti.com) or contact your TI sales representative.

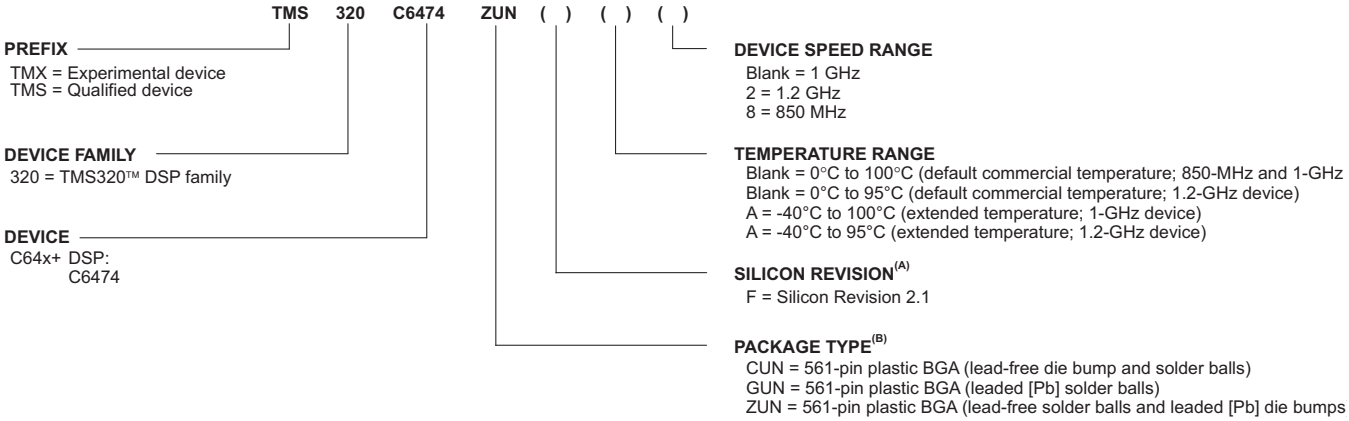

A. Silicon revision correlates to the lot trace code found on the second line of the package marking. For more information, see the *TMS320C6474 Digital Signal Processor Silicon Errata* (literature number SPRZ283).

B. BGA = Ball Grid Array

Figure 2-11. TMS320C64x+™ DSP Device Nomenclature (including TMS320C6474 DSP)

2.9 Documentation Support

The following documents describe the TMS320C6474 multicore digital signal processor. Copies of these documents are available on the Internet at www.ti.com. *Tip:* Enter the literature number in the search box provided at www.ti.com.

SPRU732 ***TMS320C64x/C64x+ DSP CPU and Instruction Set Reference Guide.*** Describes the CPU architecture, pipeline, instruction set, and interrupts for the TMS320C64x and TMS320C64x+ digital signal processors (DSPs) of the TMS320C6000 DSP family. The C64x/C64x+ DSP generation comprises fixed-point devices in the C6000 DSP platform. The C64x+ DSP is an enhancement of the C64x DSP with added functionality and an expanded instruction set.

SPRU871 ***TMS320C64x+ DSP Megamodule Reference Guide.*** Describes the TMS320C64x+ digital signal processor (DSP) megamodule. Included is a discussion on the internal direct memory access (IDMA) controller, the interrupt controller, the power-down controller, memory protection, bandwidth management, and the memory and cache.

SPRAA84 ***TMS320C64x to TMS320C64x+ CPU Migration Guide.*** Describes migrating from the Texas Instruments TMS320C64x digital signal processor (DSP) to the TMS320C64x+ DSP. The objective of this document is to indicate differences between the two cores. Functionality in the devices that is identical is not included.

SPRU889 ***High-Speed DSP Systems Design Reference Guide.*** Provides recommendations for meeting the many challenges of high-speed DSP system design. These recommendations include information about DSP audio, video, and communications systems for the C5000 and C6000 DSP platforms.

SPRUG08 ***TMS320C6474 DSP Ethernet Media Access Controller (EMAC)/ Management Data Input/Output (MDIO) User's Guide.*** This document provides a functional description of the Ethernet Media Access Controller (EMAC) and Physical layer (PHY) device Management Data Input/Output (MDIO) module integrated with the TMS320C6474 digital signal

Copyright © 2008–2011, Texas Instruments Incorporated

processors (DSPs).

SPRUG09 ***TMS320C6474 DSP Software-Programmable Phase-Locked Loop (PLL) Controller User's Guide.*** This document describes the operation of the software-programmable phase-locked loop (PLL) controller in the TMS320C6474 digital signal processors (DSPs).

SPRUG10 ***TMS320C6474 DSP PSC User's Guide.*** This document describes the Power/Sleep Controller (PSC) for the TMS320C6474 digital signal processors (DSPs).

SPRUG11 ***TMS320C6474 DSP Enhanced DMA (EDMA3) Controller User's Guide.*** This document describes the Enhanced DMA (EDMA3) Controller on the TMS320C6474 digital signal processors (DSPs).

SPRUG12 ***TMS320C6474 DSP Antenna Interface User's Guide.*** This document describes the Antenna Interface module on the TMS320C6474 digital signal processors (DSPs).

SPRUG13 ***TMS320C6474 DSP Frame Synchronization User's Guide.*** This document describes the reference guide for Frame Synchronization module on the TMS320C6474 digital signal processors (DSPs).

SPRUG14 ***TMS320C6474 DSP Semaphore User's Guide.*** This document describes the usage of the semaphore and some of the CSL calls used to configure/use the Semaphore module on the TMS320C6474 digital signal processors (DSPs).

SPRUG16 ***TMS320C6474 DSP General-Purpose Input/Output (GPIO) User's Guide.*** This document describes the general-purpose input/output (GPIO) peripheral in the digital signal processors (DSPs) of the TMS320C6474 DSP family.

SPRUG17 ***TMS320C6474 DSP Multichannel Buffered Serial Port (McBSP) Reference Guide.*** This document describes the operation of the multichannel buffered serial port (McBSP) in the digital signal processors (DSPs) of the TMS320C6474 device.

SPRUG18 ***TMS320C6474 DSP 64-Bit Timer User's Guide.*** This document provides an overview of the 64-bit timer in the TMS320C6474 digital signal processors (DSPs).

SPRUG19 ***TMS320C6474 DSP DDR2 Memory Controller User's Guide.*** This document describes the DDR2 memory controller in the TMS320C6474 digital signal processors (DSPs).

SPRUG20 ***TMS320C6474 DSP Viterbi-Decoder Coprocessor 2 (VCP2) Reference Guide.*** This document describes the operation and programming of the VCP2 in the TMS320C6474 digital signal processors (DSPs).

SPRUG21 ***TMS320C6474 DSP Turbo-Decoder Coprocessor 2 (TCP2) Reference Guide.*** This document describes the operation and programming of the TCP2 in the TMS320C6474 digital signal processors (DSPs).

SPRUG22 ***TMS320C6474 DSP Inter-Integrated Circuit (I2C) Module User's Guide.*** This document describes the inter-integrated circuit (I2C) module in the TMS320C6474 digital signal processors (DSPs).

SPRUG23 ***TMS320C6474 DSP Serial RapidIO (SRIO) User's Guide.*** This document describes the Serial RapidIO (SRIO) on the TMS320C6474 digital signal processors (DSPs).

SPRUEC6 ***TMS320C645x/C647x DSP Bootloader User's Guide.*** This document describes the features of the on-chip Bootloader provided with the TMS320C645x/C647x digital signal processors (DSPs).

SPRUFK6 ***TMS320C6474 DSP Chip Interrupt Controller (CIC) User's Guide.*** This document describes the system event routing using the chip interrupt controller (CIC) for the TMS320C6474 digital signal processors (DSPs).

SPRAAW5 ***TMS320C6474 Module Throughput.*** This document provides information on the TMS320C6474 module throughput.

Copyright © 2008–2011, Texas Instruments Incorporated

SPRAAW7 ***TMS320C6474 Hardware Design Guide.*** This document describes hardware system design considerations for the TMS320C6474 DSP.

SPRAAW8 ***TMS320C6474 DDR2 Implementation Guidelines.*** This document provides implementation instructions for the DDR2 interface contained on the TMS320C6474 DSP.

SPRAAW9 ***TMS320C6474 SERDES Implementation Guidelines.*** This document contains implementation instructions for the three serializer/deserializer (SERDES) based interfaces on the TMS320C6474 DSP.

SPRAAX3 ***TMS320C6474 Power Consumption Summary.*** This document discusses the power consumption of the Texas Instruments TMS320C6474 digital signal processor (DSP).

SPRAB25 ***How to Approach Inter-Core Communication on TMS320C6474.*** This document discusses the of handling the three cores that are present on the TMS320C6474 DSP along with what features are supported and how can they be used, how the cores communicate effectively with each other, and how board-level scalability is allowed.

2.10 Community Resources

The following links connect to TI community resources. Linked contents are provided "AS IS" by the respective contributors. They do not constitute TI specifications and do not necessarily reflect TI's views; see TI's Terms of Use.

TI E2E Community ***TI's Engineer-to-Engineer (E2E) Community.*** Created to foster collaboration among engineers. At e2e.ti.com, you can ask questions, share knowledge, explore ideas and help solve problems with fellow engineers.

TI Embedded Processors Wiki ***Texas Instruments Embedded Processors Wiki.*** Established to help developers get started with Embedded Processors from Texas Instruments and to foster innovation and growth of general knowledge about the hardware and software surrounding these devices.

Copyright © 2008–2011, Texas Instruments Incorporated

3 Device Configuration

On the C6474 device, certain device configurations (like boot mode, pin multiplexing, and endianness) are selected at device reset. The status of the peripherals (enabled/disabled) is determined after device reset. By default, the peripherals on the device are disabled and must be enabled by software before being used.

3.1 Device Configuration at Device Reset

Table 3-1 describes the C6474 device. The logic level is latched at reset to determine the device configuration. The logic level can be set by using external pullup/pulldown resistors or by using some control device to intelligently drive these pins. When using a control device, take care to avoid contention on the lines when the device is out of reset. The are sampled during power-on reset and are driven after the reset is removed. To avoid contention, the control device must stop driving the of the DSP.

NOTE

If a configuration pin must be routed out from the device, the internal pullup/pulldown (IPU/IPD) resistor should not be relied upon; TI recommends the use of an external pullup/pulldown resistor.

Table 3-1. Device Configuration Pins

CONFIGURATION PIN	DEFAULT IPU/IPD	FUNCTIONAL DESCRIPTION
BOOTMODE[3:0]	0000b	Boot Mode Selection
LENDIAN	1b	Device Endian Mode 0 Big Endian 1 Little Endian
DEVNUM[3:0]	0000b	Device number
CORECLKSEL	0b	Core Clock Select 0 SYSCLK is shared between the Antenna Interface and the input to PLLCTL1. 1 ALTCORECLK is used as the input to PLLCTL1 and SYSCLK is used only for the Antenna Interface.

3.2 Peripheral Selection After Device Reset

Several of the peripherals on the C6474 device are controlled by the Power/Sleep Controller (PSC). By default the AIF, SRIO, TCP, and VCP are held in reset and clock-gated. The memories in these modules are also in a low-leakage sleep mode. Software will be required to turn these memories on then enable the modules (turn on clocks and de-assert reset) before these modules can be used.

If one of the above modules is used in the selected boot mode, the ROM code will automatically enable the used module.

All other modules come up enabled by default and there is no special software sequence to enable.

For more detailed information on the PSC usage, see the *TMS320C6474 DSP Power/Sleep Controller (PSC) User's Guide* (literature number SPRUG10).

Copyright © 2008–2011, Texas Instruments Incorporated

3.3 Device State Control Registers

The C6474 device has a set of registers that are used to control the status of its peripherals. These registers are shown in Table 3-2.

Table 3-2. Device State Control Registers

ADDRESS START	ADDRESS END	SIZE	ACRONYM	DESCRIPTION
0288 0800	0288 0803	4B	DEVCFG1	The first register with the parameters is set through software to configure different components on the device
0288 0804	0288 0807	4B	DEVSTAT	Stores all parameters latched from configuration pins or configured through the DEVCFG register
0288 0808	0288 080B	4B	DSP_BOOT_ADDR0	The boot address for C64x+ Megamodule Core 0
0288 080C	0288 080F	4B	DSP_BOOT_ADDR1	The boot address for C64x+ Megamodule Core 1
0288 0810	0288 0813	4B	DSP_BOOT_ADDR2	The boot address for C64x+ Megamodule Core 2
0288 0814	0288 0817	4B	DEVID	Parameters for DSP device IDs also referred to as JTAG or BSDL IDs. These must be readable by the configuration bus so that this can be accessed via JTAG and CPU
0288 0818	0288 0827	16B	Reserved	
0288 0828	0288 082B	4B	Reserved	
0288 082C	0288 082F	4B	Reserved	
0288 0830	0288 0833	4B	Reserved	
0288 0834	0288 083B	8B	EFUSE_MAC	Required for EMAC boot
0288 083C	0288 083F	4B	PRI_ALLOC	Priority Allocation Register
0288 0840	0288 08FF	192B	Reserved	N/A
0288 0900	0288 0903	4B	IPCGR0	Register provided to facilitate inter-DSP interrupts and utilized by hosts or C64x+ Megamodules to generate interrupts to other DSPs
0288 0904	0288 0907	4B	IPCGR1	Register provided to facilitate inter-DSP interrupts and utilized by hosts or C64x+ Megamodules to generate interrupts to other DSPs
0288 0908	0288 090B	4B	IPCGR2	Register provided to facilitate inter-DSP interrupts and utilized by hosts or C64x+ Megamodules to generate interrupts to other DSPs
0288 090C	0288 093F	52B	Reserved	N/A
0288 0940	0288 0943	4B	IPCAR0	Register provided to facilitate inter-DSP interrupts and utilized by hosts or C64x+ Megamodules to generate interrupts to other DSPs
0288 0944	0288 0947	4B	IPCAR1	Register provided to facilitate inter-DSP interrupts and utilized by hosts or C64x+ Megamodules to generate interrupts to other DSPs
0288 0948	0288 094B	4B	IPCAR2	Register provided to facilitate inter-DSP interrupts and utilized by hosts or C64x+ Megamodules to generate interrupts to other DSPs

Copyright © 2008–2011, Texas Instruments Incorporated

3.4 Device Status Register Descriptions

The device status register depicts the device configuration selected upon device reset. Once set, these bits remain set until a device reset.

Figure 3-1 shows the device configuration register 1 and Table 3-3 describes the parameters that are set through software to configure different components on the device. The configuration is done through the device configuration DEVCFG register, which is one-time writeable through software. The register is reset on all hard resets and is locked after the first write.

31	3	2	1	0
Reserved		CLKS1	CLKS0	SYSCLKOUTEN
R-00000000000000000000000000000		R/W-0	R/W-0	R/W-1

LEGEND: R/W = Read/Write; R = Read only; -*n* = value after reset

Figure 3-1. Device Configuration Register (DEVCFG)

Table 3-3. Device Configuration Register (DEVCFG) Field Descriptions

Bit	Field	Value	Description
31:3	Reserved		Reserved
2	CLKS1		McBSP1 CLKS Select
		0	CLKS1 device pin
		1	chip_clks from Main.PLL
1	CLKS0		McBSP0 CLKS Select
		0	CLKS0 device pin
		1	chip_clks from Main.PLL
0	SYSCLKOUTEN		SYSCLKOUT Enable
		0	No Clock Output
		1	Clock output Enabled

Copyright © 2008–2011, Texas Instruments Incorporated

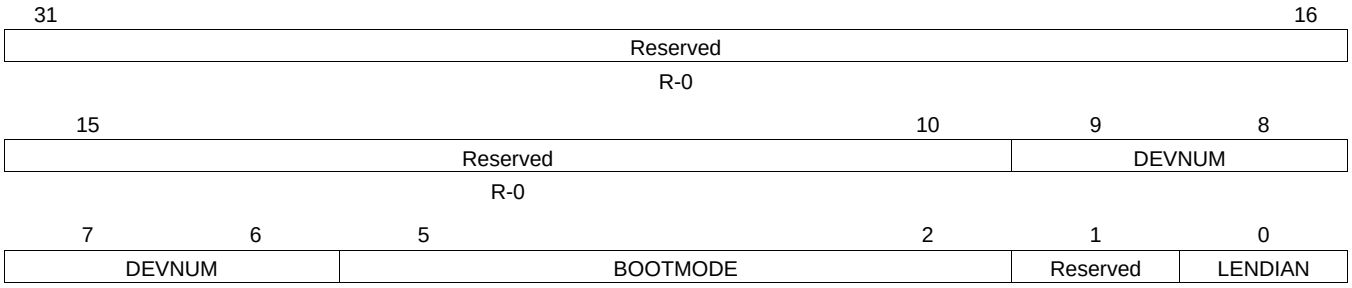

LEGEND: R/W = Read/Write; R = Read only; -*n* = value after reset

Figure 3-2. Device Configuration Status Register (DEVSTAT)

Table 3-4. Device Configuration Status Register Field Descriptions

Bit	Field	Value	Description
31:10	Reserved		Reserved
9:6	DEVNUM		Device number
5:2	BOOTMODE		Determines the boot method for the device. For more information on bootmode, see Section 2.4.
		0000	No Boot
		0001	I2C Master Boot (Slave Address 0x50)
		0010	I2C Master Boot (Slave Address 0x51)
		0011	I2C Slave Boot
		0100	EMAC Master Boot
		0101	EMAC Slave Boot
		0110	EMAC Forced Mode Boot
		0111	Reserved
		1000	RapidIO Boot (Configuration 0)
		1001	RapidIO Boot (Configuration 1)
		1010	RapidIO Boot (Configuration 2)
		1011	RapidIO Boot (Configuration 3)
		11xx	Reserved
1	Reserved		Reserved
0	LENDIAN		Device Endian mode. Shows the status of whether the system is operating in Big Endian mode or Little Endian mode.
		0	Big Endian mode
		1	Little Endian mode

Copyright © 2008–2011, Texas Instruments Incorporated

3.5 Inter-DSP Interrupt Registers (IPCGR0-IPCGR2 and IPCAR0-IPCAR2)

The IPCGR*n* (IPCGR0 thru IPCGR2) and IPCAR*n* (IPCAR0 thru IPCAR2) registers facilitate inter-DSP interrupts. This can be utilized by external hosts or C64x+ megamodules to generate interrupts to other DSPs. A write of 1 to the IPCG field of IPCGR*n* register generates an interrupt pulse to C64x+ Megamodule*n* (*n* = 0-2). These registers also provide a source ID, by which up to 28 different sources of interrupts can be identified.

31	30	29	28	27	26	25	24	23	22	21	20	19	18	17	16
SRCS27	SRCS26	SRCS25	SRCS24	SRCS23	SRCS22	SRCS21	SRCS20	SRCS19	SRCS18	SRCS17	SRCS16	SRCS15	SRCS14	SRCS13	SRCS12
R/W-0	R/W-0	R/W-0	R/W-0	R/W-0	R/W-0	R/W-0	R/W-0	R/W-0	R/W-0	R/W-0	R/W-0	R/W-0	R/W-0	R/W-0	R/W-0

15	14	13	12	11	10	9	8	7	6	5	4	3		1	0
SRCS11	SRCS10	SRCS9	SRCS8	SRCS7	SRCS6	SRCS5	SRCS4	SRCS3	SRCS2	SRCS1	SRCS0	Reserved			IPCG
R/W-0	R/W-0	R/W-0	R/W-0	R/W-0	R/W-0	R/W-0	R/W-0	R/W-0	R/W-0	R/W-0	R/W-0	R-000			R/W-0

LEGEND: R/W = Read/Write; R = Read only; -*n* = value after reset

Figure 3-3. IPC Generation Registers (IPCGR0-IPCGR2)

Table 3-5. IPC Generation Registers (IPCGR0-IPCGR2) Field Descriptions

Bit	Field	Value	Description
31:4	SRCS[27:0]		Write:
		0	No effect
		1	Set register bit
			Read:
			Returns current value of internal register bit
3:1	Reserved		Reserved
0	IPCG		Write:
		0	No effect
		1	Create an inter-DSP interrupt pulse to the corresponding C64x+ megamodule (C64x+ Megamodule0 for IPCGR0, etc.)
			Read:
			Returns 0, no effect

Copyright © 2008–2011, Texas Instruments Incorporated

31	30	29	28	27	26	25	24	23	22	21	20	19	18	17	16
SRCC27	SRCC26	SRCC25	SRCC24	SRCC23	SRCC22	SRCC21	SRCC20	SRCC19	SRCC18	SRCC17	SRCC16	SRCC15	SRCC14	SRCC13	SRCC12
R/W-0	R/W-0	R/W-0	R/W-0	R/W-0	R/W-0	R/W-0	R/W-0	R/W-0	R/W-0	R/W-0	R/W-0	R/W-0	R/W-0	R/W-0	R/W-0

15	14	13	12	11	10	9	8	7	6	5	4	3	0
SRCC11	SRCC10	SRCC9	SRCC8	SRCC7	SRCC6	SRCC5	SRCC4	SRCC3	SRCC2	SRCC1	SRCC0	Reserved	
R/W-0	R/W-0	R/W-0	R/W-0	R/W-0	R/W-0	R/W-0	R/W-0	R/W-0	R/W-0	R/W-0	R/W-0	R-0000	

LEGEND: R/W = Read/Write; R = Read only; *-n* = value after reset

Figure 3-4. IPC Acknowledgment Registers (IPCAR0-IPCAR2)

Table 3-6. IPC Acknowledgment Registers (IPCAR0-IPCAR2) Field Descriptions

Bit	Field	Value	Description
31:4	SRCC[27:0]		Write:
		0	No effect
		1	Clear register bit
			Read:
			Returns current value of internal register bit
3:0	Reserved		Reserved

3.6 JTAG ID (JTAGID) Register Description

The JTAG ID register is a read-only register that identifies to the customer the JTAG/Device ID. For the C6474 device, the JTAG ID register resides at address location 0x0288 0814. For the actual register bit names and their associated bit field descriptions, see Figure 3-5 and Table 3-7.

31 28	27 12	11 1	0
VARIANT (4-bit)	PART NUMBER (16-bit)	MANUFACTURER (11-bit)	LSB
R-n	R-0000 0000 1001 0010b	R-000 0001 0111b	R-1

LEGEND: R = Read only; *-n* = value after reset

Figure 3-5. JTAG ID (JTAGID) Register

Table 3-7. JTAG ID (JTAGID) Register Field Descriptions

Bit	Field	Value	Description
31:28	VARIANT		Variant (4-Bit) value. The value of this field depends on the silicon revision being used. **Note:** the VARIANT filed may be invalid if no CLKIN1 signal is applied.
27:12	PART NUMBER		Part Number (16-Bit) value. C6474 value: 0000 0000 1001 0010b.
11:1	MANUFACTURER		Manufacturer (11-Bit) value. C6474 value: 000 0001 0111b.
0	LSB		LSB value. This bit is read as 1 for C6474.

3.7 Debugging Considerations

It is recommended that external connections be provided to device configuration pins. Although internal pullup/pulldown resistors exist on these pins, providing external connectivity adds convenience to the user in debugging and flexibility in switching operating modes.

For the internal pullup/pulldown resistors for all device pins, see Table 2-5.

Copyright © 2008–2011, Texas Instruments Incorporated

4 System Interconnect

On the C6474 device, the C64x+ Megamodule, the EDMA3 transfer controllers, and the system peripherals are interconnected through two switch fabrics. The switch fabrics allow for low-latency, concurrent data transfers between master peripherals and slave peripherals. Through a switch fabric the CPU can send data to the Viterbi co-processor (VCP2) without affecting a data transfer through the DDR2 memory controller. The switch fabrics also allow for seamless arbitration between the system masters when accessing system slaves.

4.1 Internal Buses, Switch Fabrics, and Bridges/Gaskets

Two types of buses exist in the C6474 device: data buses and configuration buses. Some C6474 peripherals have both a data bus and a configuration bus interface, while others only have one type of interface. Furthermore, the bus interface width and speed varies from peripheral to peripheral.

Configuration buses are mainly used to access the register space of a peripheral and the data buses are used mainly for data transfers. However, in some cases, the configuration bus is also used to transfer data. For example, data is transferred to the VCP2 and TCP2 via their configuration bus interface. Similarly, the data bus can also be used to access the register space of a peripheral. For example, the DDR2 memory controller registers are accessed through their data bus interface.

The C64x+ megamodule, the EDMA3 transfer controllers, and the various system peripherals can be classified into two categories: masters and slaves. Masters are capable of initiating read and write transfers in the system and do not rely on the EDMA3 for their data transfers. Slaves on the other hand rely on the EDMA3 to perform transfers to and from them. Examples of masters include the EDMA3 transfer controllers, SRIO, and EMAC. Examples of slaves include the McBSP and I2C.

The C6474 device contains two switch fabrics through which masters and slaves communicate. The data switch fabric, known as the data switched central resource (SCR), is a high-throughput interconnect mainly used to move data across the system (for more information, see Section 4.3). The SCR adds no latency and allows seamless arbitration (i.e., no dead cycles inserted by the fabric) between the masters and slaves. The data SCR connects masters to slaves via 128-bit data buses (SCR B) and 64-bit data buses (SCR A) running at a CPU/3 frequency (CPU/3 is generated from PLL1 controller). Peripherals that have a 128-bit data bus interface running at this speed can connect directly to the data SCR; other peripherals require a bridge.

The configuration switch fabric, also known as the configuration switch central resource (SCR) is mainly used by the C64x+ Megamodule to access peripheral registers (for more information, see Section 4.4). The configuration SCR connects C64x+ Megamodule to slaves via 32-bit configuration buses running at a CPU/3 frequency (CPU/3 is generated from PLL1 controller). As with the data SCR, some peripherals require the use of a bridge to interface to the configuration SCR. Note that the data SCR also connects to the configuration SCR.

Bridges and gaskets are required to perform a variety of functions. For the purpose of this document, bridges and gaskets can be considered as identical. Within the switch fabric infrastructure, gaskets are simpler than bridges in that they only modify control signals to convert protocols. Bridges perform a variety of functions:

- Conversion between configuration bus and data bus.
- Width conversion between peripheral bus width and SCR bus width.
- Frequency conversion between peripheral bus frequency and SCR bus frequency.

For more information on the common bus architecture and its throughput in the C6474 device, see the *TMS320C6474 Common Bus Architecture Throughput* application report (literature number SPRAAX6) and the *TMS320C6474 Module Throughput* application report (literature number SPRAAW5).

Copyright © 2008–2011, Texas Instruments Incorporated

4.2 Data Switch Fabric Connections

Figure 4-1 shows the DMA switch fabric, including the EDMA3, connection between slaves and masters through the data switched central resource (SCR). Masters are shown on the right and slaves on the left. The number of master ports for the EDMA is 2x the number of TPTCs implemented because each TPTC has a read port and a write port.

Copyright © 2008–2011, Texas Instruments Incorporated

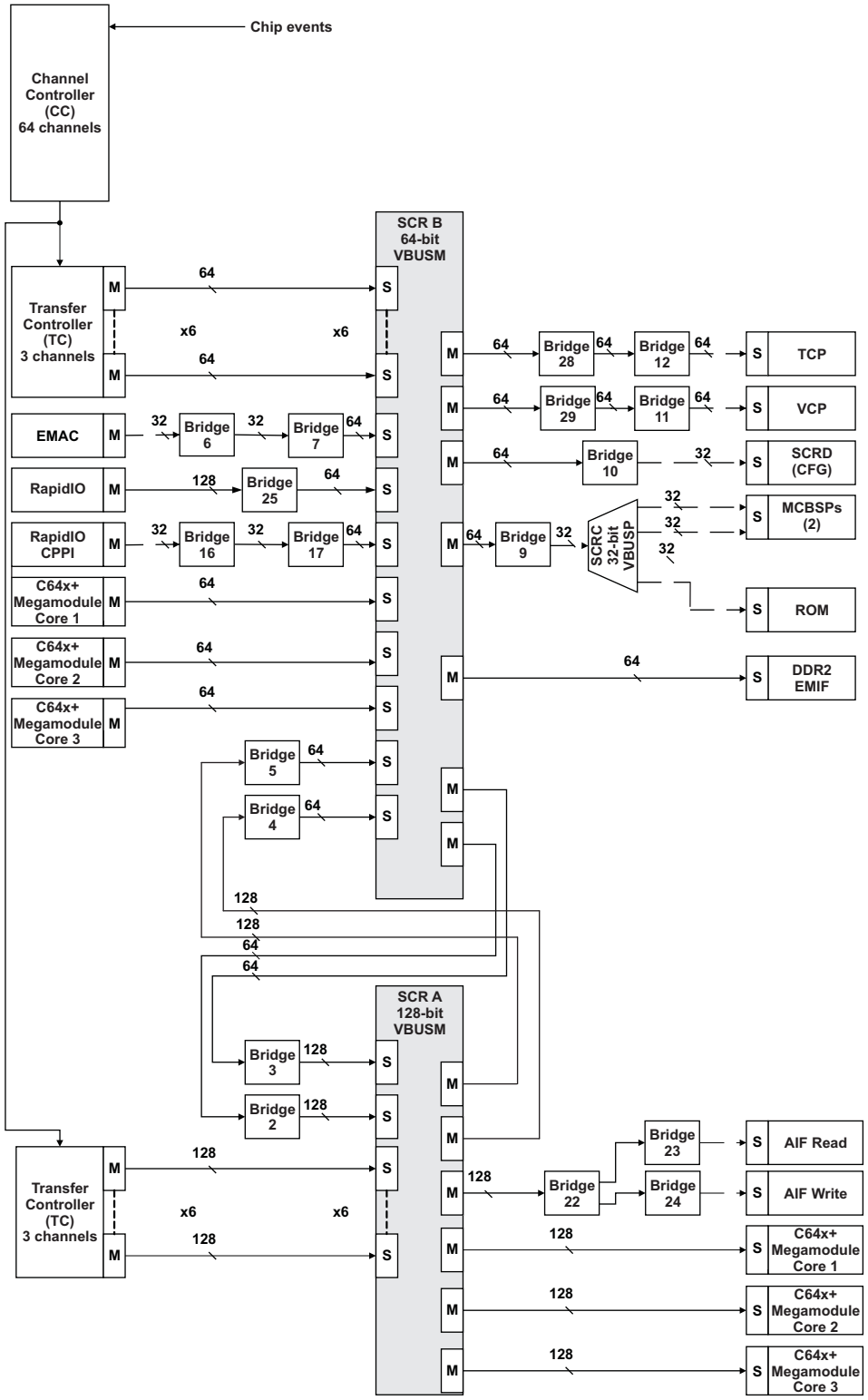

Figure 4-1. Switched Central Resource Block Diagram

Not all masters on the C6474 DSP may connect to slaves. Allowed connections are summarized in Table 4-1 and Table 4-2.

SCR A is the main 128-bit switch fabric, which includes the slave ports of all C64x+ Megamodules. There are three dedicated, 128-bit TPTC channels for internal memory-to-memory transfers, though the channels can be used to access anything on SCR B as well. Note that any module accessing these particular C64x+ Megamodules ports, including the EDMA, must use the global addresses, not the local addresses.

The Antenna Interface (AIF) is connected to the SCR via a special bridge that separates the read and write interfaces into individual ports. The AIF is fully accessible to TPTC channels 3, 4, and 5, allowing antenna data to be transferred between the AIF and any DSP memory.

Two of the SCR slave ports are driven by masters from SCR B, allowing data to be transferred between the device peripherals and L2 memory.

Table 4-1. SCR A Connection Matrix

	SCR B (Br4)	SCR B (Br5)	AIF (Br22)	C64x+ MEGAMODULE CORE 0	C64x+ MEGAMODULE CORE 1	C64x+ MEGAMODULE CORE 2
SCR B (Br2)	N	N	Y	Y	Y	Y
SCR B (Br3)	N	N	Y	Y	Y	Y
TPTC3-RM	Y	N	Y	Y	Y	Y
TPTC3-WM	Y	N	Y	Y	Y	Y
TPTC4-RM	N	Y	Y	Y	Y	Y
TPTC4-WM	N	Y	Y	Y	Y	Y
TPTC5-RM	N	Y	Y	Y	Y	Y
TPTC5-WM	N	Y	Y	Y	Y	Y

SCR B is a secondary, 64-bit switch fabric, primarily dedicated to slave peripherals that require servicing by the TPDMA. Additionally, master peripherals that are sub-128 bit are connected to this switch fabric. There are two master ports on the SCR that allow masters to send commands to any of the slaves on SCR A. There are three TPTC channels directly connected to SCR B to service the slave peripherals.

The Ethernet MAC (EMAC) is connected to the switch fabric with a pair of bridges to convert from VBUSP to VBUSM (Br 6), along with a change in the bus width and frequency (Br 7). The Br 7 handles a majority of this conversion, with the Br 6 bridge serving as a protocol-conversion gasket.

The RapidIO CPPI port is connected to the switch fabric similarly to the EMAC connection. This enables RapidIO to use L2 or DDR2 for buffer descriptors. RapidIO is connected directly to the switch fabric and can master any memory.

The DDR EMIF is also directly connected as a slave, allowing any master full access to the external memory space.

Copyright © 2008–2011, Texas Instruments Incorporated

Table 4-2. SCR B Connection Matrix

	TCP (Br12)	VCP (Br11)	SCR D (Br10)	SCR C (Br9)	L3 ROM	DDR2	SCR A (Br2)	SCR A (Br3)
TPTC0-RM	Y	Y	Y	N	N	Y	Y	N
TPTC0-WM	Y	Y	Y	N	N	Y	Y	N
TPTC1-RM	N	N	N	Y	Y	Y	N	Y
TPTC1-WM	N	N	N	Y	Y	Y	N	Y
TPTC2-RM	Y	Y	Y	Y	Y	Y	Y	N
TPTC2-WM	Y	Y	Y	Y	Y	Y	Y	N
EMAC (Br7)	N	N	N	N	N	Y	N	Y
RapidIO	N	N	Y	N	N	Y	N	Y
RapidIO CPPI (Br17)	N	N	N	N	N	Y	N	Y
SCR A (Br4)	N	N	Y	Y	Y	Y	N	N
SCR A (Br5)	N	N	Y	Y	Y	Y	N	N
C64x+ Megamodule Core 0	Y	Y	N	Y	Y	Y	N	Y
C64x+ Megamodule Core 1	Y	Y	N	Y	Y	Y	N	Y
C64x+ Megamodule Core 2	Y	Y	N	Y	Y	Y	N	Y

The SCR C connection matrix allows for the master to SCR B to access any of the 32-bit slaves on the switch fabric, plus the boot ROM. The SCR C switch connections between SCR B (Br9) to McBSP0 and McBSP1 are required.

4.3 Configuration Switch Fabric

Figure 4-2 shows the connections between the C64x+ Megamodules and the configuration switched central resource (SCR).

Copyright © 2008–2011, Texas Instruments Incorporated

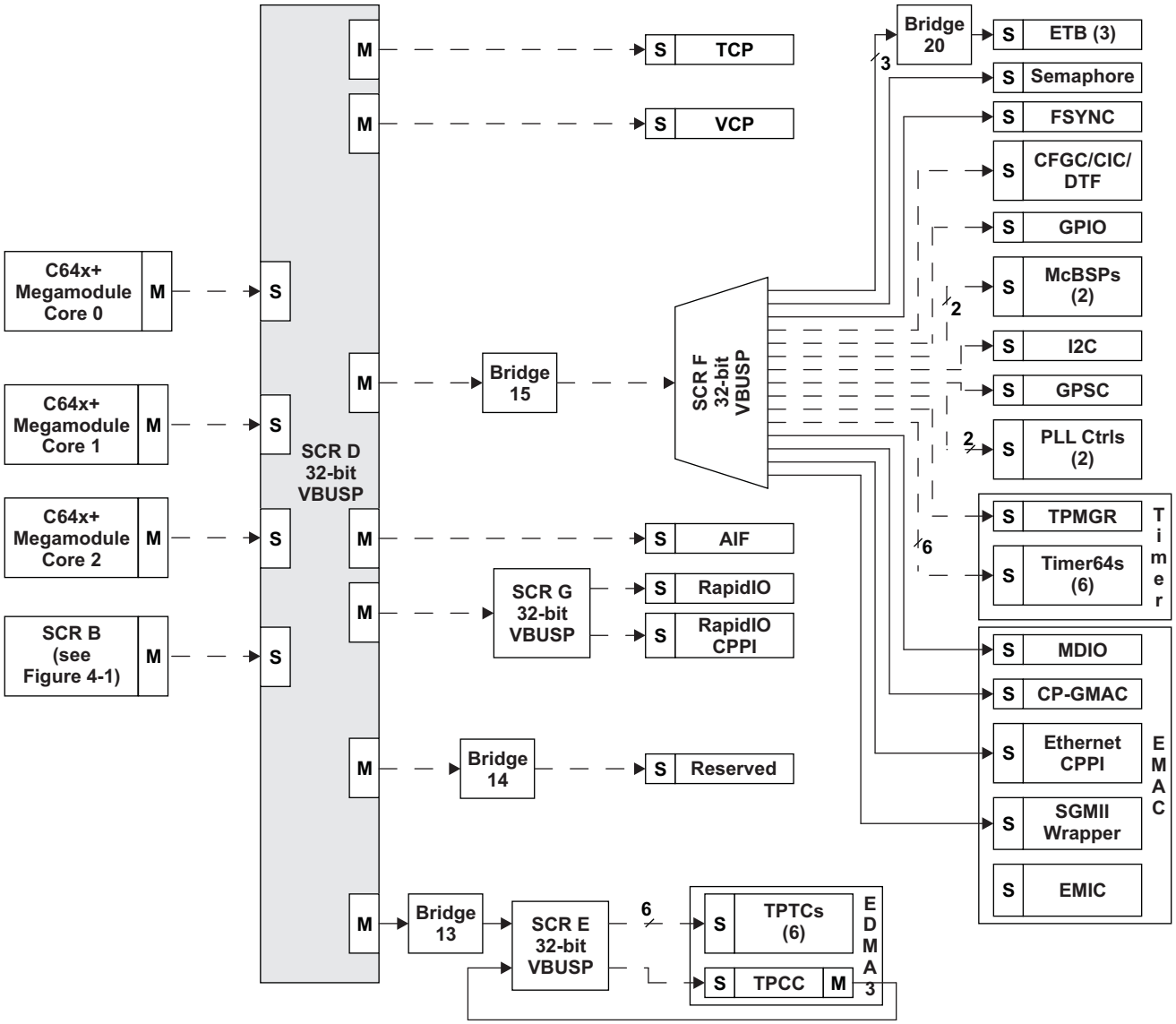

Figure 4-2. Configuration Switched Central Resource Block Diagram

Copyright © 2008–2011, Texas Instruments Incorporated

4.4 Priority Allocation

On the C6474 device, each of the masters is assigned a priority via the Priority Allocation Register (PRI_ALLOC), see Figure 4-3. User-programmable priority registers allow software configuration of the data traffic through the SCR. The priority is enforced when several masters in the system vie for the same endpoint. The PRI value of 000b has the highest priority, while the PRI value 111b has the lowest priority. A chip-level register must be provided to set these values for masters that do not have their own register internally.

The configuration SCR port on the data SCR is considered a single endpoint meaning priority will be enforced when multiple masters try to access the configuration SCR. Priority is also enforced on the configuration SCR side when a master (through the data SCR) tries to access the same endpoint as the C64x+ Megamodule.

The 4-Byte PRI_ALLOC register address range is 0288 083C - 0288 083F.

31 6	5 3	2 0
Reserved	RapidIO CPPI	EMAC
RW, +00 0000 0000 0000 0000 0000 0000	RW, +001	RW, +001

Figure 4-3. Priority Allocation Register (PRI_ALLOC)

All other master peripherals are not present in the PRI_ALLOC register, as they have their own registers to program their priorities and do not need a default priority setting. For more information on the default priority values in these peripheral registers, see the device-compatible peripheral reference guides. TI recommends that these priority registers be reprogrammed upon initial use.

Copyright © 2008–2011, Texas Instruments Incorporated

5 C64x+ Megamodule

5.1 Megamodule Diagram

The C64x+ Megamodule consists of several components - the C64x+ CPU and associated C64x+ Megamodule core, level-one and level-two memories (L1P, L1D, L2), data trace formatter (DTF), embedded trace buffer (ETB), the interrupt controller, power-down controller, external memory controller and a dedicated power/sleep controller (LPSC). The C64x+ Megamodule also provides support for memory protection and bandwidth management (for resources local to the C64x+ Megamodule). Figure 5-1 provides a block diagram of the C64x+ Megamodule.

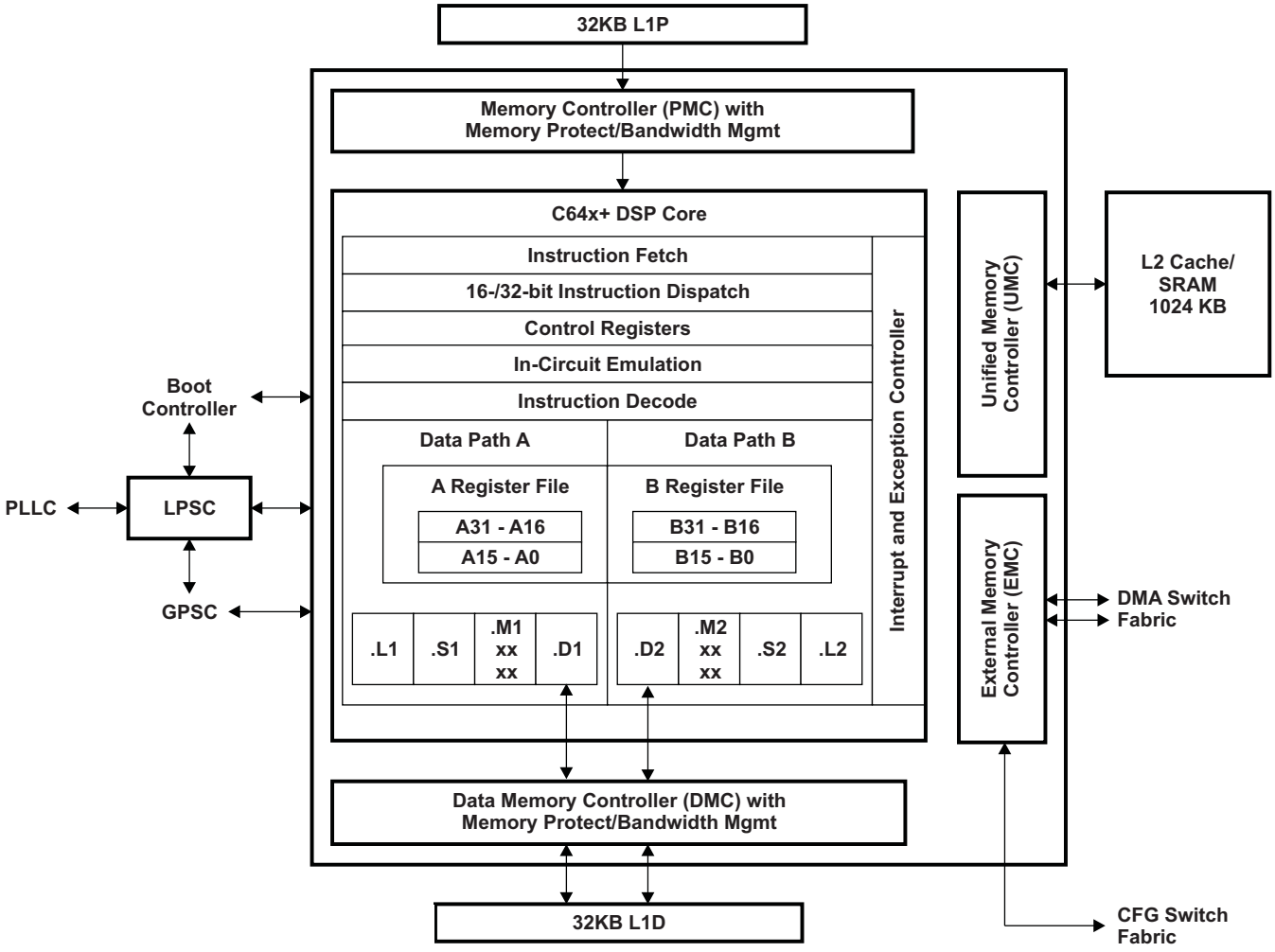

Figure 5-1. C64x+ Megamodule Block Diagram

Copyright © 2008–2011, Texas Instruments Incorporated

5.2 Memory Architecture

The C6474 device contains a 3MB level-2 memory (L2) total, a 32KB level-1 program memory (L1P) per core, and a 32KB level-1 data memory (L1D) per core. All memory has a unique location in the memory map and can be directly accessed by any master on the device.

The L1P memory configuration for the device is as follows:

- Region 0 size is 0K bytes (disabled).
- Region 1 size is 32K bytes with no wait states.

The L1D memory configuration for the device is as follows:

- Region 0 size is 0K bytes (disabled).
- Region 1 size is 32K bytes with no wait states.

After core reset, L1P and L1D cache are configured as all cache by default. The L1P and L1D cache can be reconfigured via software through the L1PMODE field of the L1P Configuration Register (L1PMODE) and the L1DMODE field of the L1D Configuration Register (L1DCFG) of the C64x+ Megamodule. L1D is a two-way set-associative cache while L1P is a direct-mapped cache.

L1P and L1D are configured as memory-mapped SRAM, rather than only unmapped cache. Though all-cache is the default configuration after device reset, the amount of cache for L1P and L1D may be programmed to be 0Kb, 4Kb, 8Kb, 16Kb, or 32Kb. All additional L1P or L1D memory space is memory-mapped SRAM. Figure 5-2 provides the memory mapping of L1P. Figure 5-2 provides the memory mapping of L1D. L1P SRAM and L1D SRAM begin at the same address regardless of the SRAM size configured.

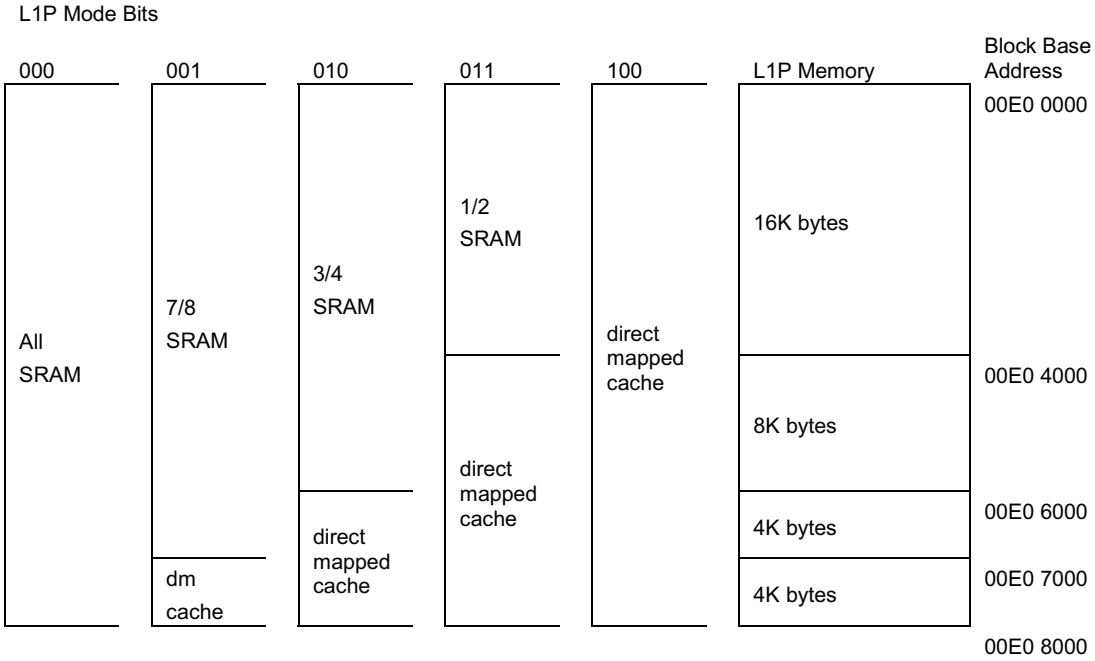

Figure 5-2. TMS320C6474 L1P Memory Configurations

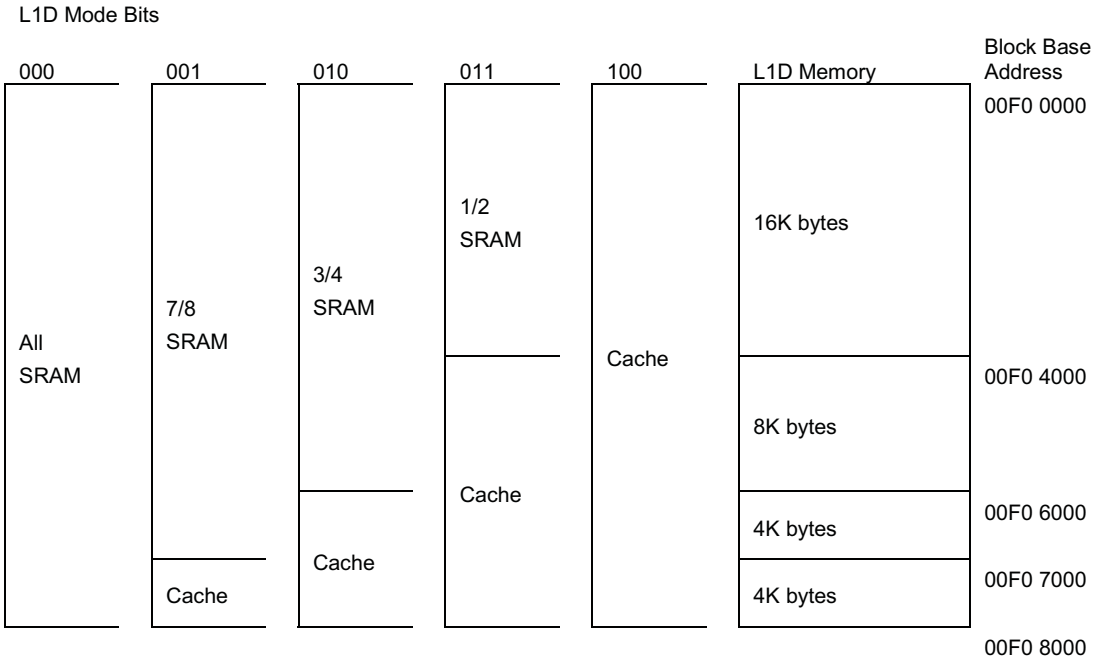

Figure 5-3. TMS320C6474 L1D Memory Configurations

Each core has 1024K bytes of local L2 RAM, with up to 256KB configurable as cache. The following figure provides the possible memory maps for the local L2. The L2 memory is typically shared across the two unified memory access ports (UMAP0 and UMAP1). The L2 SRAM begins at the same address.

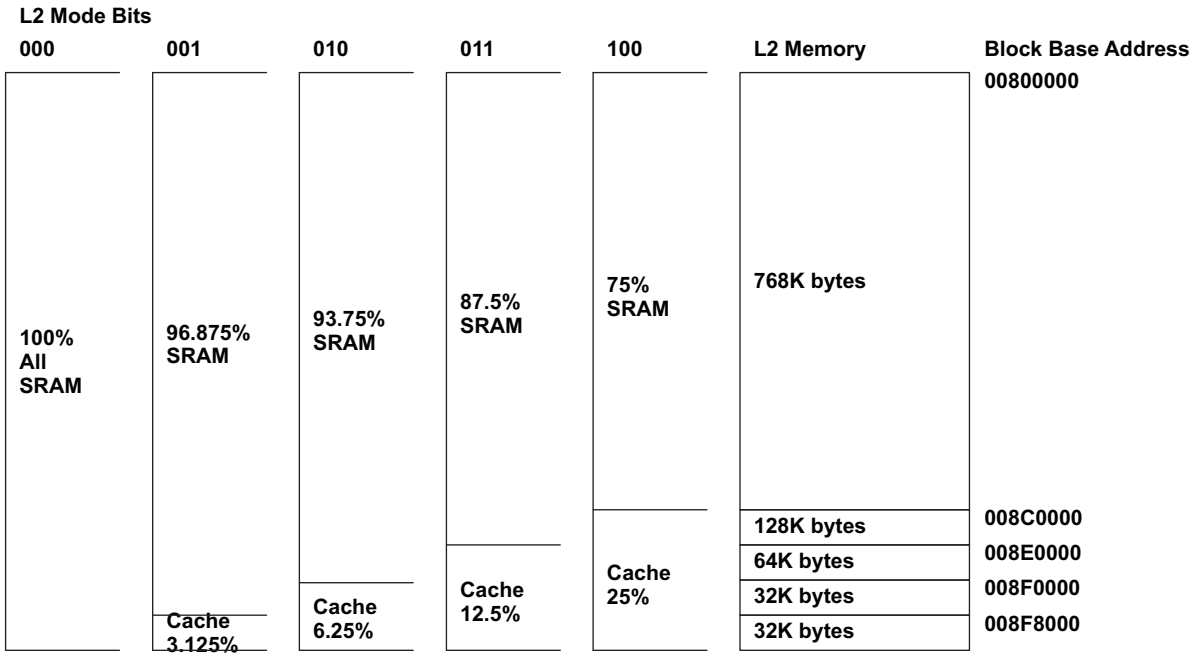

Figure 5-4. L2 Memory Configuration 1024KB

All memory on the device has a unique location in the memory (see Section 2.3, *Memory Map Summary*).

Global addresses that are accessible to all masters in the system are in all memory local to the processors. Additionally, local memory can be accessed directly by the associated processor through aliased addresses, where the eight MSBs are masked to zero. The aliasing is handled within the C64x+ Megamodule and allows for common code to be run unmodified on multiple cores. For example, address

Copyright © 2008–2011, Texas Instruments Incorporated

location 0x**10**800000 is the global base address for C64x+ Megamodule Core 0's L2 memory. C64x+ Megamodule Core 0 can access this location by either using 0x**10**800000 or 0x**00**800000. Any other master on the device must use 0x**10**800000 only. Conversely, 0x**00**800000 can by used by any of the three cores as their own L2 base addresses. For C64x+ Megamodule Core 0, as mentioned this is equivalent to 0x**10**800000, for C64x+ Megamodule Core 1 this is equivalent to 0x**11**800000, and for C64x+ Megamodule Core 2 this is equivalent to 0x**12**800000. Local addresses should only be used for shared code or data, allowing a single image to be included in memory. Any code/data targeted to a specific core, or a memory region allocated during run-time by a particular core should always use the global address only.

5.3 Memory Protection

Memory protection allows an operating system to define who or what is authorized to access L1D, L1P, and L2 memory. To accomplish this, the L1D, L1P, and L2 memories are divided into pages. There are 16 pages of L1P (2KB each), 16 pages of L1D (2KB each), and up to 64 pages of L2. The L1D, L1P, and L2 memory controllers in the C64x+ Megamodule are equipped with a set of registers that specify the permissions for each memory page. For L2, the number of protection pages and their sizes depend on the L2 configuration of the device, as defined in the previous section. The actual sizes are listed in Table 5-1.

Table 5-1. L2 Memory Protection Page Sizes

ADDRESS RANGE	C64x+ MEGAMODULE CORE 0	C64x+ MEGAMODULE CORE 1	C64x+ MEGAMODULE CORE 2
0x0080 0000 - 0x0087 FFFF	32 KB	32 KB	32 KB
0x0088 0000 - 0x008F FFFF	32 KB	32 KB	32 KB
0x0090 0000 - 0x0097 FFFF	N/A	N/A	N/A
0x0098 0000 - 0x009F FFFF	N/A	N/A	N/A

Table 5-2 shows the memory addresses used to access the L2 memory. Cells in normal font should be used by the software for memory accesses. The L2 addresses are common between all three cores, allowing for the same code to be run unmodified on each. Cells in italic (*N/A*) are not accessible. Memory protection pages are 1/32nd of the size of each UMAP. The memory protection sizes are constant across all three cores.

Table 5-2. L2 Memory Address Ranges

ADDRESS RANGE	C64x+ MEGAMODULE CORE 0	C64x+ MEGAMODULE CORE 1	C64x+ MEGAMODULE CORE 2
0x0080 0000 - 0x0087 FFFF	UMAP 0	UMAP 0	UMAP 0
0x0088 0000 - 0x008F FFFF	UMAP 0	UMAP 0	UMAP 0
0x0090 0000 - 0x0097 FFFF	N/A	N/A	N/A
0x0098 0000 - 0x009F FFFF	N/A	N/A	N/A

Each page may be assigned with fully orthogonal user and supervisor read, write, and execute permissions. Additionally, a page may be marked as either (or both) locally or globally accessible. A local access is one initiated by the CPU, while a global access is initiated by a DMA (either IDMA or DMA access by any C64x+ Megamodule or master peripheral).

The CPU and each of the system masters on the device are all assigned a privilege ID (see Table 5-3). The AIDx (x=0,1,2,3,4,5) and LOCAL bits of the memory protection page attribute registers specify the memory page protection scheme as listed in Table 5-4.

Whenever the CPU is the initiator of a memory transaction, the privilege mode (user or supervisor) in which the CPU is running at that time is carried with those transactions. This includes EDMA3 transfers that are programmed by the CPU. Other system masters (EMAC, RapidIO) are always in user mode.

Copyright © 2008–2011, Texas Instruments Incorporated

Table 5-3. Available Memory Page Protection Scheme with Privilege ID

PRIVID MODULE	PRIVILEGE MODE	DESCRIPTION
0	Inherited from CPU(1)	C64x+ Megamodule Core 0
1	Inherited from CPU(1)	C64x+ Megamodule Core 1
2	Inherited from CPU(1)	C64x+ Megamodule Core 2
3	User	EMAC
4	User	RapidIO and RapidIO CPPI

(1) Also applies to EDMA3 transfers that are programmed by the CPU.

Table 5-4. Available Memory Page Protection Scheme with AIDx and Local Bits

AIDx BIT (x=0,1,2,3,4,5)	LOCAL BIT	DESCRIPTION
0	0	No access to memory page is permitted.
0	1	Only direct access by CPU is permitted
1	0	Only accesses by system masters and IDMA are permitted (includes EDMA and IDMA accesses initiated by the CPU)
1	1	All accesses permitted

Faults are handled by software in an interrupt (or exception, programmable within each C64x+ Megamodule interrupt controller) service routine. A CPU or DMA access to a page without the proper permissions will:

- Block the access - reads return zero, writes are voided.
- Capture the initiator in a status register - ID, address, and access type are stored.
- Signal event to CPU interrupt controller.

The software is responsible for taking corrective action to respond to the event and resetting the error status in the memory controller.

5.4 Bandwidth Management

When multiple requesters contend for a single C64x+ Megamodule resource, the conflict is solved by granting access to the highest priority requestor. The following four resources are managed by the Bandwidth Management control hardware:

- Level 1 Program (L1P) SRAM/Cache
- Level 1 Data (L1D) SRAM/Cache
- Level 2 (L2) SRAM/Cache
- Memory-mapped registers configuration bus

The priority level for operations initiated within the C64x+ Megamodule; e.g., CPU-initiated transfers, user-programmed cache coherency operations, and IDMA-initiated transfers, are declared through registers in the C64x+ Megamodule. The priority level for operations initiated outside the C64x+ Megamodule by system peripherals is declared through the Priority Allocation Register (PRI_ALLOC), see Section 4.4. System peripherals with no fields in PRI_ALLOC have their own registers to program their priorities.

Table 5-5 shows the default priorities of all masters in the device.

Copyright © 2008–2011, Texas Instruments Incorporated

Table 5-5. C6474 Default Master Priorities

MASTER	DEFAULT MASTER PRIORITIES (0 = Highest priority, 7 = Lowest priority)	PRIORITY CONTROL
EDMA3TCx	0	QUEPRI.PRIQx (EDMA3 register)
SRIO (Data Access)	0	PER_SET_CNTL.CBA_TRANS_PRI (SRIO register)
SRIO (Descriptor Access)	1	PRI_ALLOC.SRIO_CPPI
EMAC	1	PRI_ALLOC.EMAC
C64x+ Megamodule (MDMA port)	7	MDMAARBE.PRI (C64x+ Megamodule register)
C64x+ Megamodule (CPU Arbitration control to L2)	1	CPUARBU (C64x+ Megamodule register)
C64x+ Megamodule (IDMA channel 1)	0	IDMA1_COUNT (C64x+ Megamodule register)

5.5 Power-Down Control

The C64x+ Megamodule supports the ability to power-down various parts of the C64x+ Megamodule. The power-down controller (PDC) of the C64x+ Megamodule can be used to power down L1P, the cache control hardware, the CPU, and the entire C64x+ Megamodule. These power-down features can be used to design systems for lower overall system power requirements. Note that the device does not support power-down modes for the L2 memory at this time.

5.6 Megamodule Resets

Table 5-6 shows the reset types supported on the device and if the resetting affects the Megamodule globally or just locally.

Table 5-6. Megamodule Reset (Global or Local)

RESET TYPE	GLOBAL RESET	LOCAL RESET
Power-On	Y	Y
Warm	Y	Y
System	Y	Y
CPU	N	Y

5.7 Megamodule Revision

The version and revision of the C64x+ Megamodule can be read from the Megamodule Revision ID Register (MM_REVID) located at address 0181 2000h. The MM_REVID register is shown in Figure 5-5 and described in Table 5-7. The C64x+ Megamodule revision is dependant on the silicon revision being used.

Figure 5-5. Megamodule Revision ID Register (MM_REVID) [Hex Address: 0181 2000h]

31	16	15	0
VERSION		REVISION(1)	
R-3h		R-n	

LEGEND: R/W = Read/Write; R = Read only; -*n* = value after reset

(1) The C64x+ Megamodule revision is dependent on the silicon revision being used.

Copyright © 2008–2011, Texas Instruments Incorporated

Table 5-7. Megamodule Revision ID Register (MM_REVID) Field Descriptions

BIT	FIELD	VALUE	DESCRIPTION
31:16	VERSION	3H	Version of the C64x+ Megamodule implemented on the device. This field is always read as 3h.
15:0	REVISION		Revision of the C64x+ Megamodule version implemented on the device. The C64x+ Megamodule revision is dependent on the silicon revision being used.

5.8 C64X+ Megamodule Register Description(s)

In some applications, some specific addresses may need to be read from their physical locations each time they are accessed (e.g., a status register within FPGA).

The L2 controller offers registers that control whether certain ranges of memory are cacheable and whether one or more requestors are actually permitted to access these ranges. The registers are referred to as memory attribute registers (MARs). A list of MARs is provided in Table 5-12.

Table 5-8. Megamodule Interrupt Registers

HEX ADDRESS	ACRONYM	REGISTER NAME
0180 0000	EVTFLAG0	Event Flag Register 0 (Events [31:0])
0180 0004	EVTFLAG1	Event Flag Register 1
0180 0008	EVTFLAG2	Event Flag Register 2
0180 000C	EVTFLAG3	Event Flag Register 3
0180 0010 - 0180 001C	-	Reserved
0180 0020	EVTSET0	Event Set Register 0 (Events [31:0])
0180 0024	EVTSET1	Event Set Register 1
0180 0028	EVTSET2	Event Set Register 2
0180 002C	EVTSET3	Event Set Register 3
0180 0030 - 0180 003C	-	Reserved
0180 0040	EVTCLR0	Event Clear Register 0 (Events [31:0])
0180 0044	EVTCLR1	Event Clear Register 1
0180 0048	EVTCLR2	Event Clear Register 2
0180 004C	EVTCLR3	Event Clear Register 3
0180 0050 - 0180 007C	-	Reserved
0180 0080	EVTMASK0	Event Mask Register 0 (Events [31:0])
0180 0084	EVTMASK1	Event Mask Register 1
0180 0088	EVTMASK2	Event Mask Register 2
0180 008C	EVTMASK3	Event Mask Register 3
0180 0090 - 0180 009C	-	Reserved
0180 00A0	MEVFLAG0	Masked Event Flag Status Register 0 (Events [31:0])
0180 00A4	MEVFLAG1	Masked Event Flag Status Register 1
0180 00A8	MEVFLAG2	Masked Event Flag Status Register 2
0180 00AC	MEVFLAG3	Masked Event Flag Status Register 3
0180 00B0 - 0180 00BC	-	Reserved
0180 00C0	EXPMASK0	Exception Mask Register 0 (Events [31:0])
0180 00C4	EXPMASK1	Exception Mask Register 1
0180 00C8	EXPMASK2	Exception Mask Register 2
0180 00CC	EXPMASK3	Exception Mask Register 3
0180 00D0 - 0180 00DC	-	Reserved
0180 00E0	MEXPFLAG0	Masked Exception Flag Register 0(Events [31:0])
0180 00E4	MEXPFLAG1	Masked Exception Flag Register 1
0180 00E8	MEXPFLAG2	Masked Exception Flag Register 2
0180 00EC	MEXPFLAG3	Masked Exception Flag Register 3

Copyright © 2008–2011, Texas Instruments Incorporated

Table 5-8. Megamodule Interrupt Registers (continued)

HEX ADDRESS	ACRONYM	REGISTER NAME
0180 00F0 - 0180 00FC	-	Reserved
0180 0100	-	Reserved
0180 0104	INTMUX1	Interrupt Multiplexer Register 1
0180 0108	INTMUX2	Interrupt Multiplexer Register 2
0180 010C	INTMUX3	Interrupt Multiplexer Register 3
0180 0110 - 0180 013C	-	Reserved
0180 0140	AEGMUX0	Advanced Event Generator Mux Register 0
0180 0144	AEGMUX1	Advanced Event Generator Mux Register 1
0180 0148 - 0180 017C	-	Reserved
0180 0180	INTXSTAT	Interrupt Exception Status Register
0180 0184	INTXCLER	Interrupt Exception Clear Register
0180 0188	INTDMASK	Dropped Interrupt Mask Register
0180 0188 - 0180 01BC	-	Reserved
0180 01C0	EVTASRT	Event Asserting Register (boot complete register)(1)
0180 01C4 - 0180 FFFF	-	Reserved

(1) Only bit 4 is used, all other bits are reserved. Bit 4 is write only and has the default 0. After boot is complete, bit 4 is set to 1 and Cores 1 and 2 are released out of reset and start executing their codes.

Table 5-9. Megamodule Power-Down Control Registers

HEX ADDRESS	ACRONYM	REGISTER NAME
0181 0000	PDCCMD	Power-Down Controller Command Register
0181 0004 - 0181 1FFF	-	Reserved

Table 5-10. Megamodule Revision Register

HEX ADDRESS	ACRONYM	REGISTER NAME
0181 2000	MM_REVID	Megamodule Revision ID Register
0181 2004 - 0181 2FFF	-	Reserved

Table 5-11. Megamodule IDMA Registers

HEX ADDRESS	ACRONYM	REGISTER NAME
0182 0000	IDMA0STAT	IDMA Channel 0 Status Register
0182 0004	IDMA0MASK	IDMA Channel 0 Mask Register
0182 0008	IDMA0SCR	IDMA Channel 0 Source Address Register
0182 000C	IDMA0DST	IDMA Channel 0 Destination Address Register
0182 0010	IDMA0CNT	IDMA Channel 0 Count Register
0182 0014 - 0182 00FC	-	Reserved
0182 0100	IDMA1STAT	IDMA Channel 1 Status Register
0182 0104	-	Reserved
0182 0108	IDMA1SRC	IDMA Channel 1 Source Address Register
0182 010C	IDMA1DST	IDMA Channel 1 Destination Address Register
0182 0110	IDMA1CNT	IDMA Channel 1 Count Register
0182 0114 - 0182 017C	-	Reserved
0182 0180	-	Reserved
0182 0184 - 0182 01FC	-	Reserved

Copyright © 2008–2011, Texas Instruments Incorporated

Table 5-12. Megamodule Cache Configuration Registers

HEX ADDRESS	ACRONYM	REGISTER NAME
0184 0000	L2CFG	L2 Cache Configuration Register
0184 0004 - 0184 001F	-	Reserved
0184 0020	L1PCFG	L1P Configuration Register
0184 0024	L1PCC	L1P Cache Control Register
0184 0028 - 0184 003F	-	Reserved
0184 0040	L1DCFG	L1D Configuration Register
0184 0044	L1DCC	L1D Cache Control Register
0184 0048 - 0184 0FFF	-	Reserved
0184 1000 - 0184 104F	-	See Table 5-15, *CPU Megamodule Bandwidth Management Registers*
0184 1050 - 0184 3FFF	-	Reserved
0184 4000	L2WBAR	L2 Writeback Base Address Register - for Block Writebacks
0184 4004	L2WWC	L2 Writeback Word Count Register
0184 4008 - 0184 400C	-	Reserved
0184 4010	L2WIBAR	L2 Writeback and Invalidate Base Address Register - for Block Writebacks
0184 4014	L2WIWC	L2 Writeback and Invalidate Word Count Register
0184 4018	L2IBAR	L2 Invalidate Base Address Register
0184 401C	L2IWC	L2 Invalidate Word Count Register
0184 4020	L1PIBAR	L1P Invalidate Base Address Register
0184 4024	L1PIWC	L1P Invalidate Word Count Register
0184 4030	L1DWIBAR	L1D Writeback and Invalidate Base Address Register
0184 4034	L1DWIWC	L1D Writeback and Invalidate Word Count Register
0184 4038	-	Reserved
0184 4040	L1DWBAR	L1D Writeback Base Address Register - for Block Writebacks
0184 4044	L1DWWC	L1D Writeback Word Count Register
0184 4048	L1DIBAR	L1D Invalidate Base Address Register
0184 404C	L1DIWC	L1D Invalidate Word Count Register
0184 4050 - 0184 4FFF	-	Reserved
0184 5000	L2WB	L2 Global Writeback Register
0184 5004	L2WBINV	L2 Global Writeback and Invalidate Register
0184 5008	L2INV	L2 Global Invalidate Register
0184 500C - 0184 5024	-	Reserved
0184 5028	L1PINV	L1P Global Invalidate Register
0184 502C - 0184 503C	-	Reserved
0184 5040	L1DWB	L1D Global Writeback Register
0184 5044	L1DWBINV	L1D Global Writeback and Invalidate Register
0184 5048	L1DINV	L1D Global Invalidate Register
0184 504C - 0184 5FFF	-	Reserved
0184 6000 - 0184 640F	-	See Table 5-13, *Megamodule Error Detection Correct Registers*
0184 6400 - 0184 7FFF	-	Reserved
0184 8000 - 0184 803C	-	Reserved
0184 8040	MAR16	Controls the Global L2 Locations 1000 0000 - 10FF FFFF
0184 8044	MAR17	Controls the Global L2 Locations 1100 0000 - 11FF FFFF
0184 8048	MAR18	Controls the Global L2 Locations 1200 0000 - 12FF FFFF
0184 804C - 0184 81FC	-	Reserved
0184 8200	MAR128	Controls DDR2 CE0 Range 8000 0000 - 80FF FFFF
0184 8204	MAR129	Controls DDR2 CE0 Range 8100 0000 - 81FF FFFF
0184 8208	MAR130	Controls DDR2 CE0 Range 8200 0000 - 82FF FFFF

Copyright © 2008–2011, Texas Instruments Incorporated

Table 5-12. Megamodule Cache Configuration Registers (continued)

HEX ADDRESS	ACRONYM	REGISTER NAME
0184 820C	MAR131	Controls DDR2 CE0 Range 8300 0000 - 83FF FFFF
0184 8210	MAR132	Controls DDR2 CE0 Range 8400 0000 - 84FF FFFF
0184 8214	MAR133	Controls DDR2 CE0 Range 8500 0000 - 85FF FFFF
0184 8218	MAR134	Controls DDR2 CE0 Range 8600 0000 - 86FF FFFF
0184 821C	MAR135	Controls DDR2 CE0 Range 8700 0000 - 87FF FFFF
0184 8220	MAR136	Controls DDR2 CE0 Range 8800 0000 - 88FF FFFF
0184 8224	MAR137	Controls DDR2 CE0 Range 8900 0000 - 89FF FFFF
0184 8228	MAR138	Controls DDR2 CE0 Range 8A00 0000 - 8AFF FFFF
0184 822C	MAR139	Controls DDR2 CE0 Range 8B00 0000 - 8BFF FFFF
0184 8230	MAR140	Controls DDR2 CE0 Range 8C00 0000 - 8CFF FFFF
0184 8234	MAR141	Controls DDR2 CE0 Range 8D00 0000 - 8DFF FFFF
0184 8238	MAR142	Controls DDR2 CE0 Range 8E00 0000 - 8EFF FFFF
0184 823C	MAR143	Controls DDR2 CE0 Range 8F00 0000 - 8FFF FFFF
0184 8240	MAR144	Controls DDR2 CE0 Range 9000 0000 - 90FF FFFF
0184 8244	MAR145	Controls DDR2 CE0 Range 9100 0000 - 91FF FFFF
0184 8248	MAR146	Controls DDR2 CE0 Range 9200 0000 - 92FF FFFF
0184 824C	MAR147	Controls DDR2 CE0 Range 9300 0000 - 93FF FFFF
0184 8250	MAR148	Controls DDR2 CE0 Range 9400 0000 - 94FF FFFF
0184 8254	MAR149	Controls DDR2 CE0 Range 9500 0000 - 95FF FFFF
0184 8258	MAR150	Controls DDR2 CE0 Range 9600 0000 - 96FF FFFF
0184 825C	MAR151	Controls DDR2 CE0 Range 9700 0000 - 97FF FFFF
0184 8260	MAR152	Controls DDR2 CE0 Range 9800 0000 - 98FF FFFF
0184 8264	MAR153	Controls DDR2 CE0 Range 9900 0000 - 99FF FFFF
0184 8268	MAR154	Controls DDR2 CE0 Range 9A00 0000 - 9AFF FFFF
0184 826C	MAR155	Controls DDR2 CE0 Range 9B00 0000 - 9BFF FFFF
0184 8270	MAR156	Controls DDR2 CE0 Range 9C00 0000 - 9CFF FFFF
0184 8274	MAR157	Controls DDR2 CE0 Range 9D00 0000 - 9DFF FFFF
0184 8278	MAR158	Controls DDR2 CE0 Range 9E00 0000 - 9EFF FFFF
0184 827C	MAR159	Controls DDR2 CE0 Range 9F00 0000 - 9FFF FFFF
0184 8280 - 0184 837C	-	Reserved
0184 8380 - 0184 83BC	-	Reserved
0184 83C0 - 0184 83FC	-	Reserved

Table 5-13. Megamodule Error Detection Correct Registers

HEX ADDRESS	ACRONYM	REGISTER NAME
0184 6000	-	Reserved
0184 6004	L2EDSTAT	L2 Error Detection Status Register
0184 6008	L2EDCMD	L2 Error Detection Command Register
0184 600C	L2EDADDR	L2 Error Detection Address Register
0184 6010	L2EDEN0	L2 Error Detection Enable Map 0 Register
0184 6014	L2EDEN1	L2 Error Detection Enable Map 1 Register
0184 6018	L2EDCPEC	L2 Error Detection - Correctable Parity Error Count Register
0184 601C	L2EDNPEC	L2 Error Detection - Non-correctable Parity Error Count Register
0184 6020 - 0184 6400	-	Reserved
0184 6404	L1Pedstat	L1P Error Detection Status Register
0184 6408	L1PEDCMD	L1P Error Detection Command Register
0184 640C	L1PEDADDR	L1P Error Detection Address Register

Copyright © 2008–2011, Texas Instruments Incorporated

Table 5-14. Megamodule L1/L2 Memory Protection Registers

HEX ADDRESS	ACRONYM	REGISTER NAME
0184 A000	L2MPFAR	L2 Memory Protection Fault Address Register
0184 A004	L2MPFSR	L2 Memory Protection Fault Status Register
0184 A008	L2MPFCR	L2 memory protection Fault Command Register
0184 A00C - 0184 A0FF	-	Reserved
0184 A100	L2MPLKO	L2 Memory Protection Lock Key Bits [31:0]
0184 A104	L2MPLK1	L2 Memory Protection Lock Key Bits [63:32]
0184 A108	L2MPLK2	L2 Memory Protection Lock Key Bits [95:64]
0184 A10C	L2MPLK3	L2 Memory Protection Lock Key Bits [127:96]
0184 A110	L2MPLKCMD	L2 Memory Protection Lock Key Command Register
0184 A114	L2MPLKSTAT	L2 Memory Protection Lock Key Status Register
0184 A118 - 0184 A1FF	-	Reserved
0184 A200	L2MPPA0	L2 Memory Protection Page Attribute Register 0(1)
0184 A204	L2MPPA1	L2 Memory Protection Page Attribute Register 1
0184 A208	L2MPPA2	L2 Memory Protection Page Attribute Register 2
0184 A20C	L2MPPA3	L2 Memory Protection Page Attribute Register 3
0184 A210	L2MPPA4	L2 Memory Protection Page Attribute Register 4
0184 A214	L2MPPA5	L2 Memory Protection Page Attribute Register 5
0184 A218	L2MPPA6	L2 Memory Protection Page Attribute Register 6
0184 A21C	L2MPPA7	L2 Memory Protection Page Attribute Register 7
0184 A220	L2MPPA8	L2 Memory Protection Page Attribute Register 8
0184 A224	L2MPPA9	L2 Memory Protection Page Attribute Register 9
0184 A228	L2MPPA10	L2 Memory Protection Page Attribute Register 10
0184 A22C	L2MPPA11	L2 Memory Protection Page Attribute Register 11
0184 A230	L2MPPA12	L2 Memory Protection Page Attribute Register 12
0184 A234	L2MPPA13	L2 Memory Protection Page Attribute Register 13
0184 A238	L2MPPA14	L2 Memory Protection Page Attribute Register 14
0184 A23C	L2MPPA15	L2 Memory Protection Page Attribute Register 15
0184 A240	L2MPPA16	L2 Memory Protection Page Attribute Register 16
0184 A244	L2MPPA17	L2 Memory Protection Page Attribute Register 17
0184 A248	L2MPPA18	L2 Memory Protection Page Attribute Register 18
0184 A24C	L2MPPA19	L2 Memory Protection Page Attribute Register 19
0184 A250	L2MPPA20	L2 Memory Protection Page Attribute Register 20
0184 A254	L2MPPA21	L2 Memory Protection Page Attribute Register 21
0184 A258	L2MPPA22	L2 Memory Protection Page Attribute Register 22
0184 A25C	L2MPPA23	L2 Memory Protection Page Attribute Register 23
0184 A260	L2MPPA24	L2 Memory Protection Page Attribute Register 24
0184 A264	L2MPPA25	L2 Memory Protection Page Attribute Register 25
0184 A268	L2MPPA26	L2 Memory Protection Page Attribute Register 26
0184 A26C	L2MPPA27	L2 Memory Protection Page Attribute Register 27
0184 A270	L2MPPA28	L2 Memory Protection Page Attribute Register 28
0184 A274	L2MPPA29	L2 Memory Protection Page Attribute Register 29
0184 A278	L2MPPA30	L2 Memory Protection Page Attribute Register 30
0184 A27C	L2MPPA31	L2 Memory Protection Page Attribute Register 31
0184 A280	L2MPPA32	L2 Memory Protection Page Attribute Register 32
0184 A284	L2MPPA33	L2 Memory Protection Page Attribute Register 33
0184 A288	L2MPPA34	L2 Memory Protection Page Attribute Register 34

(1) The default value of all L2MPPAn registers is 0x0000 FFFF.

Copyright © 2008–2011, Texas Instruments Incorporated

Table 5-14. Megamodule L1/L2 Memory Protection Registers (continued)

HEX ADDRESS	ACRONYM	REGISTER NAME
0184 A28C	L2MPPA35	L2 Memory Protection Page Attribute Register 35
0184 A290	L2MPPA36	L2 Memory Protection Page Attribute Register 36
0184 A294	L2MPPA37	L2 Memory Protection Page Attribute Register 37
0184 A298	L2MPPA38	L2 Memory Protection Page Attribute Register 38
0184 A29C	L2MPPA39	L2 Memory Protection Page Attribute Register 39
0184 A2A0	L2MPPA40	L2 Memory Protection Page Attribute Register 40
0184 A2A4	L2MPPA41	L2 Memory Protection Page Attribute Register 41
0184 A2A8	L2MPPA42	L2 Memory Protection Page Attribute Register 42
0184 A2AC	L2MPPA43	L2 Memory Protection Page Attribute Register 43
0184 A2B0	L2MPPA44	L2 Memory Protection Page Attribute Register 44
0184 A2B4	L2MPPA45	L2 Memory Protection Page Attribute Register 45
0184 A2B8	L2MPPA46	L2 Memory Protection Page Attribute Register 46
0184 A2BC	L2MPPA47	L2 Memory Protection Page Attribute Register 47
0184 A2C0	L2MPPA48	L2 Memory Protection Page Attribute Register 48
0184 A2C4	L2MPPA49	L2 Memory Protection Page Attribute Register 49
0184 A2C8	L2MPPA50	L2 Memory Protection Page Attribute Register 50
0184 A2CC	L2MPPA51	L2 Memory Protection Page Attribute Register 51
0184 A2D0	L2MPPA52	L2 Memory Protection Page Attribute Register 52
0184 A2D4	L2MPPA53	L2 Memory Protection Page Attribute Register 53
0184 A2D8	L2MPPA54	L2 Memory Protection Page Attribute Register 54
0184 A2DC	L2MPPA55	L2 Memory Protection Page Attribute Register 55
0184 A2E0	L2MPPA56	L2 Memory Protection Page Attribute Register 56
0184 A2E4	L2MPPA57	L2 Memory Protection Page Attribute Register 57
0184 A2E8	L2MPPA58	L2 Memory Protection Page Attribute Register 58
0184 A2EC	L2MPPA59	L2 Memory Protection Page Attribute Register 59
0184 A2F0	L2MPPA60	L2 Memory Protection Page Attribute Register 60
0184 A2F4	L2MPPA61	L2 Memory Protection Page Attribute Register 61
0184 A2F8	L2MPPA62	L2 Memory Protection Page Attribute Register 62
0184 A2FC	L2MPPA63	L2 Memory Protection Page Attribute Register 63
0184 A300 - 0184 A3FF	-	Reserved
0184 A400	L1PMPFAR	L1 Program (L1P) Memory Protection Fault Address Register
0184 A404	L1PMPFSR	L1P Memory Protection Fault Status Register
0184 A408	L1PMPFCR	L1P Memory Protection Fault Command Register
0184 A40C - 0184 A4FF	-	Reserved
0184 A500	L1PMPLK0	L1P Memory Protection Lock Key Bits [31:0]
0184 A504	L1PMPLK1	L1P Memory Protection Lock Key Bits [63:32]
0184 A508	L1PMPLK2	L1P Memory Protection Lock Key Bits [95:64]
0184 A50C	L1PMPLK3	L1P Memory Protection Lock Key Bits [127:96]
0184 A510	L1PMPLKCMD	L1P Memory Protection Lock Key Command Register
0184 A514	L1PMPLKSTAT	L1P Memory Protection Lock Key Status Register
0184 A518 - 0184 A5FF	-	Reserved
0184 A600 - 0184 A63C(2)	-	Reserved
0184 A640	L1PMPPA16	L1P Memory Protection Page Attribute Register 16
0184 A644	L1PMPPA17	L1P Memory Protection Page Attribute Register 17
0184 A648	L1PMPPA18	L1P Memory Protection Page Attribute Register 18

(2) These addresses correspond to the L1P memory protection page attribute registers 0-15 (L1PMPPA0-L1PMPPA15) of the C64x+ megamodule. These registers are not supported for the C6474 device. The default value after the device reset for registers L1PMPPA16 to L1PMPPA31 is 0x0000 FFFF.

Copyright © 2008–2011, Texas Instruments Incorporated

Table 5-14. Megamodule L1/L2 Memory Protection Registers (continued)

HEX ADDRESS	ACRONYM	REGISTER NAME
0184 A64C	L1PMPPA19	L1P Memory Protection Page Attribute Register 19
0184 A650	L1PMPPA20	L1P Memory Protection Page Attribute Register 20
0184 A654	L1PMPPA21	L1P Memory Protection Page Attribute Register 21
0184 A658	L1PMPPA22	L1P Memory Protection Page Attribute Register 22
0184 A65C	L1PMPPA23	L1P Memory Protection Page Attribute Register 23
0184 A660	L1PMPPA24	L1P Memory Protection Page Attribute Register 24
0184 A664	L1PMPPA25	L1P Memory Protection Page Attribute Register 25
0184 A668	L1PMPPA26	L1P Memory Protection Page Attribute Register 26
0184 A66C	L1PMPPA27	L1P Memory Protection Page Attribute Register 27
0184 A670	L1PMPPA28	L1P Memory Protection Page Attribute Register 28
0184 A674	L1PMPPA29	L1P Memory Protection Page Attribute Register 29
0184 A678	L1PMPPA30	L1P Memory Protection Page Attribute Register 30
0184 A67C	L1PMPPA31	L1P Memory Protection Page Attribute Register 31
0184 A680 - 0184 ABFF	-	Reserved
0184 AC00	L1DMPFAR	L1 Data (L1D) Memory Protection Fault Address Register
0184 AC04	L1DMPFSR	L1D Memory Protection Fault Status Register
0184 AC08	L1DMPFCR	L1D Memory Protection Fault Command Register
0184 AC0C - 0184 ACFF	-	Reserved
0184 AD00	L1DMPLK0	L1D Memory Protection Lock Key Bits [31:0]
0184 AD04	L1DMPLK1	L1D Memory Protection Lock Key Bits [63:32]
0184 AD08	L1DMPLK2	L1D Memory Protection Lock Key Bits [95:64]
0184 AD0C	L1DMPLK3	L1D Memory Protection Lock Key Bits [127:96]
0184 AD10	L1DMPLKCMD	L1D Memory Protection Lock Key Command Register
0184 AD14	L1DMPLKSTAT	L1D Memory Protection Lock Key Status Register
0184 AD18 - 0184 ADFF	-	Reserved
0184 AE00 - 0184 AE3C(3)	-	Reserved
0184 AE40	L1DMPPA16	L1D Memory Protection Page Attribute Register 16
0184 AE44	L1DMPPA17	L1D Memory Protection Page Attribute Register 17
0184 AE48	L1DMPPA18	L1D Memory Protection Page Attribute Register 18
0184 AE4C	L1DMPPA19	L1D Memory Protection Page Attribute Register 19
0184 AE50	L1DMPPA20	L1D Memory Protection Page Attribute Register 20
0184 AE54	L1DMPPA21	L1D Memory Protection Page Attribute Register 21
0184 AE58	L1DMPPA22	L1D Memory Protection Page Attribute Register 22
0184 AE5C	L1DMPPA23	L1D Memory Protection Page Attribute Register 23
0184 AE60	L1DMPPA24	L1D Memory Protection Page Attribute Register 24
0184 AE64	L1DMPPA25	L1D Memory Protection Page Attribute Register 25
0184 AE68	L1DMPPA26	L1D Memory Protection Page Attribute Register 26
0184 AE6C	L1DMPPA27	L1D Memory Protection Page Attribute Register 27
0184 AE70	L1DMPPA28	L1D Memory Protection Page Attribute Register 28
0184 AE74	L1DMPPA29	L1D Memory Protection Page Attribute Register 29
0184 AE78	L1DMPPA30	L1D Memory Protection Page Attribute Register 30
0184 AE7C	L1DMPPA31	L1D Memory Protection Page Attribute Register 31
0184 AE80 - 0185 FFFF	-	Reserved

(3) These addresses correspond to the L1D memory protection page attribute registers 0-15 (L1DMPPA0-L1DMPPA15) of the C64x+ megamodule. These registers are not supported for the C6474 device. The default value after the device reset for registers L1DMPPA16 to L1DMPPA31 is 0x0000 FFF6.

Copyright © 2008–2011, Texas Instruments Incorporated

Table 5-15. CPU Megamodule Bandwidth Management Registers

HEX ADDRESS	ACRONYM	REGISTER NAME
0182 0200	EMCCPUARBE	EMC CPU Arbitration Control Register
0182 0204	EMCIDMAARBE	EMC IDMA Arbitration Control Register
0182 0208	EMCSDMAARBE	EMC Slave DMA Arbitration Control Register
0182 020C	EMCMDMAARBE	EMC Master DMA Arbitration Control Register
0182 0210 - 0182 02FF	-	Reserved
0184 1000	L2DCPUARBU	L2D CPU Arbitration Control Register
0184 1004	L2DIDMAARBU	L2D IDMA Arbitration Control Register
0184 1008	L2DSDMAARBU	L2D Slave DMA Arbitration Control Register
0184 100C	L2DUCARBU	L2D User Coherence Arbitration Control Register
0184 1010 - 0184 103F	-	Reserved
0184 1040	L1DCPUARBD	L1D CPU Arbitration Control Register
0184 1044	L1DIDMAARBD	L1D IDMA Arbitration Control Register
0184 1048	L1DSDMAARBD	L1D Slave DMA Arbitration Control Register
0184 104C	L1DUCARBD	L1D User Coherence Arbitration Control Register

Copyright © 2008–2011, Texas Instruments Incorporated

6 Device Operating Conditions

Based on JESD22-C101C (*Field-Induced Charged-Device Model Test Method for Electrostatic-Discharge-Withstand Thresholds of Microelectronic Components*), the TMS320C6474 device's charged-device model (CDM) sensitivity classification is Class II (200 to <500 V). Specifically, DDR memory interface and SERDES pins conform to ±200-V level. All other pins conform to ±500 V.

6.1 Absolute Maximum Ratings Over Operating Case Temperature Range (Unless Otherwise Noted)(1)

Supply voltage range(2):	CV_{DD}	-0.3 V - 1.35 V
	DV_{DD11}(3)	-0.3 V to 1.35 V
	DV_{DD18}	-0.3 V to 2.45 V
	$V_{REFSSTL}$	0.49 * DV_{DD18} to 0.51 * DV_{DD18}
	AIF_V_{DDA11}, AIF_V_{DDD11}, AIF_V_{DDT11}	-0.3 V to 1.35 V
	AIF_V_{DDR18}	-0.3 V to 2.45 V
	SGR_V_{DDA11}, SGR_V_{DDD11}, SGR_V_{DDT11}	-0.3 V to 1.35 V
	SGR_V_{DDR18}	-0.3 V to 2.45 V
	AV_{DD118}, AV_{DD218}	-0.3 V to 2.45 V
	V_{SS} Ground	0 V
Input voltage (V_I) range:	1.8-V Single-Ended I/Os	-0.3 V to DV_{DD18} + 0.3 V
	DDR2	-0.3 V to 2.45 V
	I2C/VCNTL	-0.3 V to 2.45 V
	Frame Sync Differential Clocks	-0.3 V to DV_{DD18} + 0.3 V
	SYSCLK, CORECLK, DDR REFCLK, SRIO/EMAC REFCLK	-0.3 V to 1.35 V
	SERDES	-0.3 V to DV_{DD11} + 0.3 V
Output voltage (V_O) range:	1.8-V Single-Ended I/Os	-0.3 V to DV_{DD18} + 0.3 V
	DDR2	-0.3 V to 2.45 V
	I2C/VCNTL	-0.3 V to 2.45 V
	SERDES	-0.3 V to DV_{DD11} + 0.3 V
Operating case temperature range, T_C:	850-MHz and 1-GHz device commercial temperature	0°C to 100°C(4)
	1.2-GHz device commercial temperature	0°C to 95°C(4)
	1-GHz device extended temperature	-40°C to 100°C(4)
	1.2-GHz device extended temperature(5)	-40°C to 95°C(4)
Storage temperature range, T_{stg}:		-65°C to 150°C

(1) Stresses beyond those listed under "absolute maximum ratings" may cause permanent damage to the device. These are stress ratings only, and functional operation of the device at these or any other conditions beyond those indicated under "recommended operating conditions" is not implied. Exposure to absolute-maximum-rated conditions for extended periods may affect device reliability.
(2) All voltage values are with respect to V_{SS}.
(3) There is no pin named DV_{DD11} available on the device. DV_{DD11} represents the AIF_V_{DDA11}, AIF_V_{DDD11}, AIF_V_{DDT11}, SGR_V_{DDA11}, SGR_V_{DDD11}, and SGR_V_{DDT11} pins.
(4) A heatsink is required for proper device operation.
(5) Advance Information is presented in this document for the C6474 1.2-GHz extended temperature device.

Copyright © 2008–2011, Texas Instruments Incorporated

6.2 Recommended Operating Conditions[1][2]

			MIN	NOM	MAX	UNIT
CV_{DD}	Supply core voltage (scalable)[1]		CV_{DD} - (0.03CV_{DD})	0.9 - 1.2	CV_{DD} + (0.03CV_{DD})	V
DV_{DD11}	1.1-V supply core I/O voltage		1.045	1.1	1.155	V
DV_{DD18}	1.8-V supply I/O voltage		1.71	1.8	1.89	V
$V_{REFSSTL}$	DDR2 reference voltage		0.49 * DV_{DD18}	0.5 * DV_{DD18}	0.51 * DV_{DD18}	V
AIF_V_{DDA11}	AIF SERDES analog supply		1.045	1.1	1.155	V
AIF_V_{DDD11}	AIF SERDES digital supply		1.045	1.1	1.155	V
AIF_V_{DDR18}	AIF SERDES regulator supply		1.71	1.8	1.89	V
AIF_V_{DDT11}	AIF SERDES termination supply		1.045	1.1	1.155	V
SGR_V_{DDA11}	SRIO/SGMII SERDES analog supply		1.045	1.1	1.155	V
SGR_V_{DDD11}	SRIO/SGMII SERDES digital supply		1.045	1.1	1.155	V
SGR_V_{DDR18}	SRIO/SGMII SERDES regulator supply		1.71	1.8	1.89	V
SGR_V_{DDT11}	SRIO/SGMII SERDES termination supply		1.045	1.1	1.155	V
AV_{DD118}	PLL1 analog supply		1.71	1.8	1.89	V
AV_{DD218}	PLL2 analog supply		1.71	1.8	1.89	V
V_{SS}	Ground		0	0	0	V
V_I	Input voltage at PADP or PADN		0		2	V
	Input frequency		30		625	MHz
V_{ID}	Peak-to-peak differential input voltage		250		2000	mV
V_{IH}	High-level input voltage[3]	1.8-V Single Ended I/Os	0.65 * DV_{DD18}			V
		I2C/VCNTL, SmartReflex	0.7 * DV_{DD18}			V
		DDR2 EMIF	$V_{REFSSTL}$ + 0.125		DV_{DD18} + 0.3	V
V_{IL}	Low-level input voltage[3]	1.8-V Single Ended I/Os			0.35 * DV_{DD18}	V
		DDR2 EMIF	-0.3		$V_{REFSSTL}$ - 0.1	V
		I2C/VCNTL			0.3 * DV_{DD18}	V
T_C	Operating case temperature	1.2-GHz device (commercial temperature)	0		95	°C
		1.2-GHz device (extended temperature)[4]	-40		95	
		850-MHz and 1.0-GHz device (commercial temperature)	0		100	
		1.0-GHz device (extended temperature)	-40		100	

(1) A heatsink and implementation of the SmartReflex solution is required for proper device operation. For more details on SmartReflex, see Section 7.3.4.
(2) All SERDES I/Os comply with the XAUI Electical Specification, IEEE 802.3ae-2002.
(3) All differential clock inputs comply with the Frame Sync Differential Clocks Electrical Specification, IEEE 1596.3-1996 and all SERDES I/Os comply with the XAUI Electical Specification, IEEE 802.3ae-2002.
(4) Advance Information is presented in this document for the C6474 1.2-GHz extended temperature device.

Copyright © 2008–2011, Texas Instruments Incorporated

6.3 Electrical Characteristics Over Recommended Ranges of Supply Voltage and Operating Case Temperature (Unless Otherwise Noted)

PARAMETER			TEST CONDITIONS(1)	MIN	TYP	MAX	UNIT
V_{OH}	High-level output voltage	1.8-V Single Ended I/Os	$I_O = I_{OH}$	DV_{DD18} - 0.45			V
		DDR2		1.4			
		I2C/VCNTL		0.1 * DVdd18			
V_{OL}	Low-level output voltage	1.8-V Single Ended I/Os	$I_O = I_{OL}$			0.45	V
		DDR2				0.4	
		I2C/VCNTL	I_O = 3 mA, pulled up to 1.8 V			0.4	
I_I (2)	Input current [DC]	1.8-V Single Ended I/Os	No IPD/IPU	-5		5	µA
			Internal pullup	-169	-100	-47	
			Internal pulldown	49	100	160	
		I2C/VCNTL	0.1 * DV_{DD18} V < V_I < 0.9 * DV_{DD18} V	-20		20	µA
I_{OH}	High-level output current [DC]	EMU[18:00], GPIO[15:0], TIMO[1:0]				-8	mA
		SYSCLKOUT, TDO, CLKR0, CLKX0, DX0, FSR0, FSX0, CLKR1, CLKX1, DX1, FSR1, FSX1				-6	
		$\overline{\text{RESETSTAT}}$, SMFRAMECLK, MDIO, MDCLK				-4	
		DDR2				4	
I_{OL}	Low-level output current [DC]	EMU[18:00], GPIO[15:0], TIM[1:0]				8	mA
		SYSCLKOUT, TDO, CLKR0, CLKX0, DX0, FSR0, FSX0, CLKR1, CLKX1, DX1, FSR1, FSX1				6	
		$\overline{\text{RESETSTAT}}$, SMFRAMECLK, MDIO, MDCLK				4	
		DDR2				-4	
I_{OZ} (3)	Off-state output current [DC]	1.8-V Single Ended I/Os		-20		20	µA

(1) For test conditions shown as MIN, MAX, or TYP, use the appropriate value specified in the recommended operating conditions table.
(2) I_I applies to input-only pins and bi-directional pins. For input-only pins, I_I indicates the input leakage current. For bi-directional pins, I_I includes input leakage current and off-state (hi-Z) output leakage current.
(3) I_{OZ} applies to output-only pins, indicating off-state (hi-Z) output leakage current.

Copyright © 2008–2011, Texas Instruments Incorporated

7 Peripheral Information and Electrical Specifications

7.1 Parameter Information

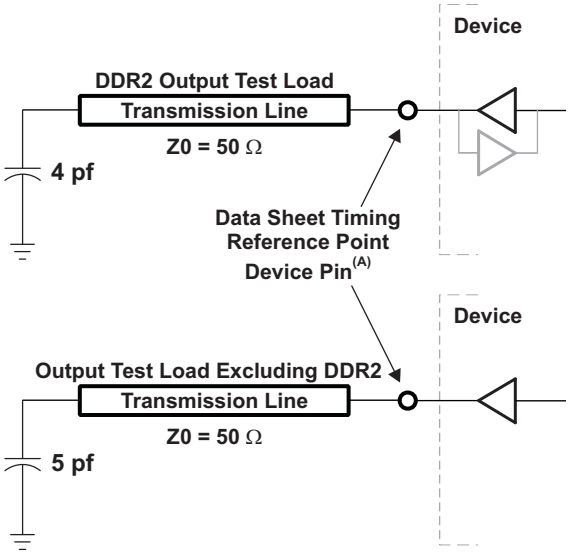

A. The data sheet provides timing at the device pin. For output analysis, the transmission line and associated parasitics (vias, multiple nodes, etc.) must also be taken into account. The transmission line delay varies depending on the trace length. An approximate range for output delays can vary from 176 ps to 2 ns depending on the end product design. For recommended transmission line lengths, see the appropriate application notes, user's guides, and design guides. A transmission line delay of 2 ns was used for all output measurements, except the DDR2 which was evaluated using a 528-ps delay.

B. This figure represents all outputs, except differential or I2C.

Figure 7-1. Test Load Circuit for AC Timing Measurements

The load capacitance value stated is for characterization and measurement of AC timing signals. This load capacitance value does not indicate the maximum load the device is capable of driving.

7.1.1 1.8 V Signal Transition Levels

All input and output timing parameters are referenced to 0.9 V for both "0" and "1" logic levels.

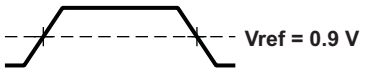

Figure 7-2. Input and Output Voltage Reference Levels for AC Timing Measurements

All rise and fall transition timing parameters are reference to V_{IL} MAX and V_{IH} MIN for input clocks.

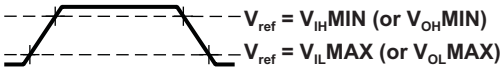

Figure 7-3. Rise and Fall Transition Time Voltage Reference Levels

7.2 Recommended Clock and Control Signal Transition Behavior

All clocks and control signals must transition between V_{IH} and V_{IL} (or between V_{IL} and V_{IH}) in a monotonic manner.

7.3 Power Supplies

7.3.1 Power-Supply Sequencing

Power supply sequencing must be followed as seen in Figure 7-4.

Table 7-1. Timing Requirements for Power Supply Ramping

(see Figure 7-4)

NO.	PARAMETERS		MIN	MAX	UNIT
3	$t_{su(DVDD18-DVDD11)}$	Setup Time, DV_{DD18} and VREFSSTL supply stable before DV_{DD11} and CV_{DD11} supplies stable(1)	0.5	200	ms
4	$t_{h(DVDD11-POR)}$	Hold time, $\overline{POR}$ low after CV_{DD11} and DV_{DD11} supplies stable(1)	100		µs

(1) Stable means that the voltage is valid as per Section 6.2, *Recommended Operating Conditions*.

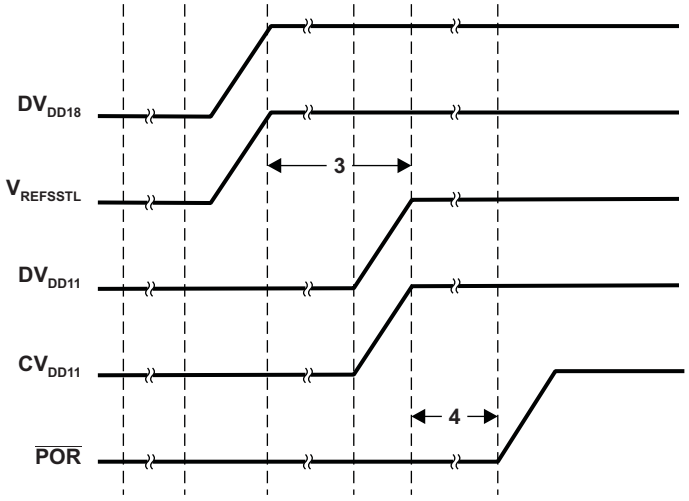

Figure 7-4. Power-Supply Timing

For more information on power-supply sequencing, see the *TMS320C6474 Hardware Design Guide* application report (literature number SPRAAW7)

7.3.2 Power-Supply Decoupling

In order to properly decouple the supply planes from system noise, place as many capacitors (caps) as possible close to the DSP. These caps need to be close to the DSP, no more than 1.25 cm maximum distance to be effective. Physically smaller caps are better, such as 0402, but need to be evaluated from a yield/manufacturing point-of-view. Parasitic inductance limits the effectiveness of the decoupling capacitors, therefore physically smaller capacitors should be used while maintaining the largest available capacitance value. As with the selection of any component, verification of capacitor availability over the product's production lifetime should be considered.

7.3.3 Power-Down Operation

One of the power goals for the C6474 device is to reduce power dissipation due to unused peripherals. There are different ways to power down peripherals on the C6474 device.

Copyright © 2008–2011, Texas Instruments Incorporated

Some peripherals can be statically powered down at device reset through the device configuration pins (see Section 3.1, *Device Configuration at Device Reset*). Once in a static power-down state, the peripheral is held in reset and its clock is turned off. Peripherals cannot be enabled once they are in a static power-down state. To take a peripheral out of the static power-down state, a device reset must be executed with a different configuration pin setting.

After device reset, all peripherals on the C6474 device are in a disabled state and must be enabled by software before being used. It is possible to enable only the peripherals needed by the application while keeping the rest disabled. Note that peripherals in a disabled state are held in reset with their clocks gated. For more information on how to enable peripherals, see Section 3.2, *Peripheral Selection After Device Reset*.

Peripherals used for booting, like I2C, are automatically enabled after device reset. It is possible to disable peripherals used for booting after the boot process is complete. This, too, results in gating of the clock(s) to the powered-down peripheral. Once a peripheral is powered-down, it must remain powered down until the next device reset.

The C64x+ Megamodule also allows for software-driven power-down management for all of the C64x+ Megamodule components through its Power-Down Controller (PDC). The CPU can power-down part or the entire C64x+ Megamodule through the power-down controller based on its own execution thread or in response to an external stimulus from a host or global controller. More information on the power-down features of the C64x+ Megamodule can be found in the *TMS320C64x+ Megamodule Reference Guide* (literature number SPRU871).

Table 7-2 lists the Power/Sleep Controller (PSC) registers.

Table 7-2. Power/Sleep Controller Registers

HEX ADDRESS	ACRONYM	REGISTER NAME
02AC 0000	PID	Peripheral Revision and Class Information
02AC 0120	PTCMD	Power Domain Transition Command Register
02AC 0128	PTSTAT	Power Domain Transition Status Register
02AC 0200	PDSTAT	Power Domain Status Register
02AC 0300	PDCTL0	Power Domain Control Register 0 (AlwaysOn)
02AC 0304	PDCTL1	Power Domain Control Register 1 (Antenna Interface)
02AC 0308	PDCTL2	Power Domain Control Register 2 (Serial RapidIO)
02AC 030C	-	Reserved
02AC 0310	PDCTL4	Power Domain Control Register 4 (TCP)
02AC 0314	PDCTL5	Power Domain Control Register 5 (VCP)
02AC 0800	-	Reserved
02AC 0804	-	Reserved
02AC 0808	-	Reserved
02AC 080C	MDSTAT3	Module Status Register 3 (C64x+ Core 0)
02AC 0810	MDSTAT4	Module Status Register 4 (C64x+ Core 1)
02AC 0814	MDSTAT5	Module Status Register 5 (C64x+ Core 2)
02AC 0818	MDSTAT6	Module Status Register 6 (Antenna Interface)
02AC 081C	MDSTAT7	Module Status Register 7 (Serial RapidIO)
02AC 0820	-	Reserved
02AC 0824	MDSTAT9	Module Status Register 9 (TCP)
02AC 0828	MDSTAT10	Module Status Register 10 (VCP)
02AC 082C	MDSTAT11	Module Status Register 11 (Never Gated)
02AC 0A00	-	Reserved
02AC 0A04	-	Reserved
02AC 0A08	-	Reserved

Copyright © 2008–2011, Texas Instruments Incorporated

Table 7-2. Power/Sleep Controller Registers (continued)

HEX ADDRESS	ACRONYM	REGISTER NAME
02AC 0A0C	MDCTL3	Module Control Register 3 (C64x+ Core 0)
02AC 0A10	MDCTL4	Module Control Register 4 (C64x+ Core 1)
02AC 0A14	MDCTL5	Module Control Register 5 (C64x+ Core 2)
02AC 0A18	MDCTL6	Module Control Register 6 (Antenna Interface)
02AC 0A1C	MDCTL7	Module Control Register 7 (Serial RapidIO)
02AC 0A20	-	Reserved
02AC 0A24	MDCTL9	Module Control Register 9 (TCP)
02AC 0A28	MDCTL10	Module Control Register 10 (VCP)
02AC 0A2C	MDCTL11	Module Control Register 11 (Never Gated)

7.3.4 SmartReflex

Increasing the device complexity increases its power consumption and with the smaller transistor structures responsible for higher achievable clock rates and increased performance, comes an inevitable penalty, increasing the leakage currents. Leakage currents are present in any active circuit, independently of clock rates and usage scenarios. This static power consumption is mainly determined by transistor type and process technology. Higher clock rates also increase dynamic power, the power used when transistors switch. The dynamic power depends mainly on a specific usage scenario, clock rates, and I/O activity.

Texas Instruments' SmartReflex™ technology is used to decrease both static and dynamic power consumption while maintaining the device performance. SmartReflex in the C6474 device is a feature that allows the core voltage to be optimized based on the process corner of the device. This requires a voltage regulator for each C6474 device.

To guarantee maximizing performance and minimizing power consumption of the device, SmartReflex is required to be implemented whenever the C6474 device is used.

The voltage selection is done using 4 VCNTL pins which are used to select the output voltage of the core voltage regulator. For complete information on SmartReflex, see the *TMS320C6474 Hardware Design Guide* application report (literature number SPRAAW7).

Copyright © 2008–2011, Texas Instruments Incorporated

7.4 Peripheral IDs (PIDs)

The peripheral ID is a unique ID for each peripheral module. It represents the module version details. Table 7-3 shows the PIDs for each peripheral module.

Table 7-3. C6474 Modules Peripheral IDs

SR NO.	MODULE	MEMORY MAPPED ADDRESS	PID		
			PG1.2	PG1.3	PG2.0
1	EDMA TC0	0x02A20000	0x40003300	0x40003300	0x40003300
2	EDMA TC1	0x02A28000	0x40003300	0x40003300	0x40003300
3	EDMA TC2	0x02A30000	0x40003300	0x40003300	0x40003300
4	EDMA TC3	0x02A38000	0x40003300	0x40003300	0x40003300
5	EDMA TC4	0x02A40000	0x40003300	0x40003300	0x40003300
6	EDMA TC5	0x02A48000	0x40003300	0x40003300	0x40003300
7	EDMA CC	0x02A00000	0x40015300	0x40015340	0x40015340
8	DDR2	0x70000000	0x0031031b	0x0031031b	0x0031031b
9	McBSP0	0x028C0058	0x00020103	0x00020103	0x00020103
10	McBSP1	0x028D0058	0x00020103	0x00020103	0x00020103
11	I2C PID1	0x02B04034	0x00000106	0x00000106	0x00000106
12	I2C PID2	0x02B04038	0x00000005	0x00000005	0x00000005
13	Timer64_0	0x02910000	0x00010701	0x00010701	0x00010701
14	Timer64_1	0x02920000	0x00010701	0x00010701	0x00010701
15	Timer64_2	0x02930000	0x00010701	0x00010701	0x00010701
16	Timer64_3	0x02940000	0x00010701	0x00010701	0x00010701
17	Timer64_4	0x02950000	0x00010701	0x00010701	0x00010701
18	Timer64_5	0x02960000	0x00010701	0x00010701	0x00010701
19	PLL CTRL	0x029A0000	0x0001080d	0x0001080d	0x0001080d
20	PSC	0x02AC0000	0x44821105	0x44821105	0x44821105
21	GPIO	0x02B00000	0x44830105	0x44830105	0x44830105
22	SRIO	0x02D00000	0x44A43102	0x44A43102	0x44A43102
23	AIF	0x02BC0000	0x4800200C	0x4800200C	0x4800200C
24	FSYNC	0x02800000	0x48010900	0x48010900	0x48010900
25	-	Not used	Not used	Not used	Not used
26	TCP3	0x02BA0000	0x00021105	0x00021105	0x00021105
27	EMAC TX	0x02C80000	0x000C0A0B	0x000C0A0B	0x000C0A0B
28	EMAC RX	0x02C80010	0x000C0A0B	0x000C0A0B	0x000C0A0B
29	MDIO	0X02C81800	0x00070104	0x00070104	0x00070104
30	SGMII	0x02C40000	0x002c0100	0x002C0100	0x002C0100
31	EMAC Control Module	0x02C81000	0x002d0102	0x002d0102	0x002d0102
32	SEM	0x02B40000	0x48020100	0x48020100	0x48020100
33	VCP	0x02B80000	0x00011107	0x00011107	0x00011107

Copyright © 2008–2011, Texas Instruments Incorporated

7.5 Enhanced Direct Memory Access (EDMA3) Controller

The primary purpose of the EDMA3 is to service user-programmed data transfers between two memory-mapped slave endpoints on the device. The EDMA3 services software-driven paging transfers (e.g., data movement between external memory and internal memory), performs sorting or subframe extraction of various data structures, services event driven peripherals such as a McBSP port, and offloads data transfers from the device CPU.

The EDMA3 includes the following features:

- Fully orthogonal transfer description
  - 3 transfer dimensions: array (multiple bytes), frame (multiple arrays), and block (multiple frames)
  - Single event can trigger transfer of array, frame, or entire block
  - Independent indexes on source and destination
- Flexible transfer definition:
  - Increment or FIFO transfer addressing modes
  - Linking mechanism allows for ping-pong buffering, circular buffering, and repetitive/continuous transfers, all with no CPU intervention
  - Chaining allows multiple transfers to execute with one event
- 256 PaRAM entries
  - Used to define transfer context for channels
  - Each PaRAM entry can be used as a DMA entry, QDMA entry, or link entry
- 64 DMA channels
  - Manually triggered (CPU writes to channel controller register), external event triggered, and chain triggered (completion of one transfer triggers another)
- 8 Quick DMA (QDMA) channels
  - Used for software-driven transfers
  - Triggered upon writing to a single PaRAM set entry
- 6 transfer controllers and 6 event queues with programmable system-level priority
- Interrupt generation for transfer completion and error conditions
- Debug visibility
  - Queue watermarking/threshold allows detection of maximum usage of event queues
  - Error and status recording to facilitate debug

Each of the transfer controllers has a direct connection to the switched central resource (SCR). Table 4-1 lists the peripherals that can be accessed by the transfer controllers.

Copyright © 2008–2011, Texas Instruments Incorporated

7.5.1 EDMA3 Channel Synchronization Events

The EDMA3 supports up to 64 DMA channels that can be used to service system peripherals and to move data between system memories. DMA channels can be triggered by synchronization events generated by system peripherals. Table 7-4 lists the source of the synchronization event associated with each of the DMA channels. The association of each synchronization event and DMA channel is fixed and cannot be reprogrammed. Additional events are available to the EDMA3 via an external interrupt controller. For more details on Chip Interrupt Controller 3 (CIC3), see Section 7.6.2.

Table 7-4. EDMA3 Channel Synchronization Events(1)

EVENT CHANNEL	EVENT	EVENT DESCRIPTION
0	TINT0L	Timer Interrupt Low
1	TINT0H	Timer Interrupt High
2	TINT1L	Timer Interrupt Low
3	TINT1H	Timer Interrupt High
4	TINT2L	Timer Interrupt Low
5	TINT2H	Timer Interrupt High
6	CIC3_EVT0	CIC_EVT_o [0] from Chip Interrupt Controller
7	CIC3_EVT1	CIC_EVT_o [1] from Chip Interrupt Controller
8	CIC3_EVT2	CIC_EVT_o [2] from Chip Interrupt Controller
9	CIC3_EVT3	CIC_EVT_o [3] from Chip Interrupt Controller
10	CIC3_EVT4	CIC_EVT_o [4] from Chip Interrupt Controller
11	CIC3_EVT5	CIC_EVT_o [5] from Chip Interrupt Controller
12	XEVT0	McBSP 0 Transmit Event
13	REVT0	McBSP 0 Receive Event
14	XEVT1	McBSP 1 Transmit Event
15	REVT1	McBSP 1Receive Event
16	FSEVT4	Frame Synchronization Event 4
17	FSEVT5	Frame Synchronization Event 5
18	FSEVT6	Frame Synchronization Event 6
19	FSEVT7	Frame Synchronization Event 7
20	FSEVT8	Frame Synchronization Event 8
21	FSEVT9	Frame Synchronization Event 9
22	FSEVT10	Frame Synchronization Event 10
23	FSEVT11	Frame Synchronization Event 11
24	FSEVT12	Frame Synchronization Event 12
25	FSEVT13	Frame Synchronization Event 13
26	CIC3_EVT6	CIC_EVT_o [6] from Chip Interrupt Controller
27	CIC3_EVT7	CIC_EVT_o [7] from Chip Interrupt Controller
28	VCPREVT	VCP Receive Event
29	VCPXEVT	VCP Transmit Event
30	TCPREVT	TCP Receive Event
31	TCPXEVT	TCP Transmit Event
32	SEMINT0	Semaphore Interrupt 0
33	SEMINT1	Semaphore Interrupt 1
34	SEMINT2	Semaphore Interrupt 2
35	-	Reserved
36	AIF_EVT0	AIF CPU Interrupt 0
37	AIF_EVT1	AIF CPU Interrupt 1

(1) In addition to the events shown in this table, each of the 64 channels can also be synchronized with the manual event set or transfer completion events.

Copyright © 2008–2011, Texas Instruments Incorporated

Table 7-4. EDMA3 Channel Synchronization Events[1] (continued)

EVENT CHANNEL	EVENT	EVENT DESCRIPTION
38	AIF_EVT2	AIF CPU Interrupt 2
39	AIF_EVT3	AIF CPU Interrupt 3
40	AIF_PSEVT1	Packet Switched Transfer Event 1
41	AIF_PSEVT3	Packet Switched Transfer Event 3
42	AIF_PSEVT5	Packet Switched Transfer Event 5
43	CIC3_EVT8	CIC_EVT_o [8] from Chip Interrupt Controller
44	IREVT	I2C Receive Event
45	IXEVT	I2C Transmit Event
46	CIC3_EVT9	CIC_EVT_o [9] from Chip Interrupt Controller
47	CIC3_EVT10	CIC_EVT_o [10] from Chip Interrupt Controller
48	CIC3_EVT11	CIC_EVT_o [11] from Chip Interrupt Controller
49	CIC3_EVT12	CIC_EVT_o [12 from Chip Interrupt Controller
50	CIC3_EVT13	CIC_EVT_o [13] from Chip Interrupt Controller
51	CIC3_EVT14	CIC_EVT_o [14] from Chip Interrupt Controller
52	CIC3_EVT15	CIC_EVT_o [15] from Chip Interrupt Controller
53	GPINT5	GPIO Event 5
54	GPINT6	GPIO Event 6
55	GPINT7	GPIO Event 7
56	GPINT8	GPIO Event 8
57	GPINT9	GPIO Event 9
58	GPINT10	GPIO Event 10
59	GPINT11	GPIO Event 11
60	GPINT12	GPIO Event 12
61	GPINT13	GPIO Event 13
62	GPINT14	GPIO Event 14
63	GPINT15	GPIO Event 15

7.5.2 EDMA3 Peripheral Register Description(s)

Table 7-5. EDMA3 Registers

HEX ADDRESS	ACRONYM	REGISTER NAME
02A0 0000	PID	Peripheral ID Register
02A0 0004	CCCFG	EDMA3CC Configuration Register
02A0 0008 - 02A0 00FC	-	Reserved
02A0 0100	DCHMAP0	DMA Channel 0 Mapping Register
02A0 0104	DCHMAP1	DMA Channel 1 Mapping Register
02A0 0108	DCHMAP2	DMA Channel 2 Mapping Register
02A0 010C	DCHMAP3	DMA Channel 3 Mapping Register
02A0 0110	DCHMAP4	DMA Channel 4 Mapping Register
02A0 0114	DCHMAP5	DMA Channel 5 Mapping Register
02A0 0118	DCHMAP6	DMA Channel 6 Mapping Register
02A0 011C	DCHMAP7	DMA Channel 7 Mapping Register
02A0 0120	DCHMAP8	DMA Channel 8 Mapping Register
02A0 0124	DCHMAP9	DMA Channel 9 Mapping Register
02A0 0128	DCHMAP10	DMA Channel 10 Mapping Register
02A0 012C	DCHMAP11	DMA Channel 11 Mapping Register
02A0 0130	DCHMAP12	DMA Channel 12 Mapping Register

Copyright © 2008–2011, Texas Instruments Incorporated

Table 7-5. EDMA3 Registers (continued)

HEX ADDRESS	ACRONYM	REGISTER NAME
02A0 0134	DCHMAP13	DMA Channel 13 Mapping Register
02A0 0138	DCHMAP14	DMA Channel 14 Mapping Register
02A0 013C	DCHMAP15	DMA Channel 15 Mapping Register
02A0 0140	DCHMAP16	DMA Channel 16 Mapping Register
02A0 0144	DCHMAP17	DMA Channel 17 Mapping Register
02A0 0148	DCHMAP18	DMA Channel 18 Mapping Register
02A0 014C	DCHMAP19	DMA Channel 19 Mapping Register
02A0 0150	DCHMAP20	DMA Channel 20 Mapping Register
02A0 0154	DCHMAP21	DMA Channel 21 Mapping Register
02A0 0158	DCHMAP22	DMA Channel 22 Mapping Register
02A0 015C	DCHMAP23	DMA Channel 23 Mapping Register
02A0 0160	DCHMAP24	DMA Channel 24 Mapping Register
02A0 0164	DCHMAP25	DMA Channel 25 Mapping Register
02A0 0168	DCHMAP26	DMA Channel 26 Mapping Register
02A0 016C	DCHMAP27	DMA Channel 27 Mapping Register
02A0 0170	DCHMAP28	DMA Channel 28 Mapping Register
02A0 0174	DCHMAP29	DMA Channel 29 Mapping Register
02A0 0178	DCHMAP30	DMA Channel 30 Mapping Register
02A0 017C	DCHMAP31	DMA Channel 31 Mapping Register
02A0 0180	DCHMAP32	DMA Channel 32 Mapping Register
02A0 0184	DCHMAP33	DMA Channel 33 Mapping Register
02A0 0188	DCHMAP34	DMA Channel 34 Mapping Register
02A0 018C	DCHMAP35	DMA Channel 35 Mapping Register
02A0 0190	DCHMAP36	DMA Channel 36 Mapping Register
02A0 0194	DCHMAP37	DMA Channel 37 Mapping Register
02A0 0198	DCHMAP38	DMA Channel 38 Mapping Register
02A0 019C	DCHMAP39	DMA Channel 39 Mapping Register
02A0 01A0	DCHMAP40	DMA Channel 40 Mapping Register
02A0 01A4	DCHMAP41	DMA Channel 41 Mapping Register
02A0 01A8	DCHMAP42	DMA Channel 42 Mapping Register
02A0 01AC	DCHMAP43	DMA Channel 43 Mapping Register
02A0 01B0	DCHMAP44	DMA Channel 44 Mapping Register
02A0 01B4	DCHMAP45	DMA Channel 45 Mapping Register
02A0 01B8	DCHMAP46	DMA Channel 46 Mapping Register
02A0 01BC	DCHMAP47	DMA Channel 47 Mapping Register
02A0 01C0	DCHMAP48	DMA Channel 48 Mapping Register
02A0 01C4	DCHMAP49	DMA Channel 49 Mapping Register
02A0 01C8	DCHMAP50	DMA Channel 50 Mapping Register
02A0 01CC	DCHMAP51	DMA Channel 51 Mapping Register
02A0 01D0	DCHMAP52	DMA Channel 52 Mapping Register
02A0 01D4	DCHMAP53	DMA Channel 53 Mapping Register
02A0 01D8	DCHMAP54	DMA Channel 54 Mapping Register
02A0 01DC	DCHMAP55	DMA Channel 55 Mapping Register
02A0 01E0	DCHMAP56	DMA Channel 56 Mapping Register
02A0 01E4	DCHMAP57	DMA Channel 57 Mapping Register
02A0 01E8	DCHMAP58	DMA Channel 58 Mapping Register
02A0 01EC	DCHMAP59	DMA Channel 59 Mapping Register

Copyright © 2008–2011, Texas Instruments Incorporated

Table 7-5. EDMA3 Registers (continued)

HEX ADDRESS	ACRONYM	REGISTER NAME
02A0 01F0	DCHMAP60	DMA Channel 60 Mapping Register
02A0 01F4	DCHMAP61	DMA Channel 61 Mapping Register
02A0 01F8	DCHMAP62	DMA Channel 62 Mapping Register
02A0 01FC	DCHMAP63	DMA Channel 63 Mapping Register
02A0 0200	QCHMAP0	QDMA Channel 0 Mapping Register
02A0 0204	QCHMAP1	QDMA Channel 1 Mapping Register
02A0 0208	QCHMAP2	QDMA Channel 2 Mapping Register
02A0 020C	QCHMAP3	QDMA Channel 3 Mapping Register
02A0 0210	QCHMAP4	QDMA Channel 4 Mapping Register
02A0 0214	QCHMAP5	QDMA Channel 5 Mapping Register
02A0 0218	QCHMAP6	QDMA Channel 6 Mapping Register
02A0 021C	QCHMAP7	QDMA Channel 7 Mapping Register
02A0 0220 - 02A0 023C	-	Reserved
02A0 0240	DMAQNUM0	DMA Queue Number Register 0
02A0 0244	DMAQNUM1	DMA Queue Number Register 1
02A0 0248	DMAQNUM2	DMA Queue Number Register 2
02A0 024C	DMAQNUM3	DMA Queue Number Register 3
02A0 0250	DMAQNUM4	DMA Queue Number Register 4
02A0 0254	DMAQNUM5	DMA Queue Number Register 5
02A0 0258	DMAQNUM6	DMA Queue Number Register 6
02A0 025C	DMAQNUM7	DMA Queue Number Register 7
02A0 0260	QDMAQNUM	QDMA Queue Number Register
02A0 0264 - 02A0 027C	-	Reserved
02A0 0280	QUETCMAP	Queue to TC Mapping Register
02A0 0284	QUEPRI	Queue Priority Register
02A0 0288 - 02A0 02FC	-	Reserved
02A0 0300	EMR	Event Missed Register
02A0 0304	EMRH	Event Missed Register High
02A0 0308	EMCR	Event Missed Clear Register
02A0 030C	EMCRH	Event Missed Clear Register High
02A0 0310	QEMR	QDMA Event Missed Register
02A0 0314	QEMCR	QDMA Event Missed Clear Register
02A0 0318	CCERR	EDMA3CC Error Register
02A0 031C	CCERRCLR	EDMA3CC Error Clear Register
02A0 0320	EEVAL	Error Evaluate Register
02A0 0324 - 02A0 033C	-	Reserved
02A0 0340	DRAE0	DMA Region Access Enable Register for Region 0
02A0 0344	DRAEH0	DMA Region Access Enable Register High for Region 0
02A0 0348	DRAE1	DMA Region Access Enable Register for Region 1
02A0 034C	DRAEH1	DMA Region Access Enable Register High for Region 1
02A0 0350	DRAE2	DMA Region Access Enable Register for Region 2
02A0 0354	DRAEH2	DMA Region Access Enable Register High for Region 2
02A0 0358	DRAE3	DMA Region Access Enable Register for Region 3
02A0 035C	DRAEH3	DMA Region Access Enable Register High for Region 3
02A0 0360	DRAE4	DMA Region Access Enable Register for Region 4
02A0 0364	DRAEH4	DMA Region Access Enable Register High for Region 4
02A0 0368	DRAE5	DMA Region Access Enable Register for Region 5

Copyright © 2008–2011, Texas Instruments Incorporated

Table 7-5. EDMA3 Registers (continued)

HEX ADDRESS	ACRONYM	REGISTER NAME
02A0 036C	DRAEH5	DMA Region Access Enable Register High for Region 5
02A0 0370	DRAE6	DMA Region Access Enable Register for Region 6
02A0 0374	DRAEH6	DMA Region Access Enable Register High for Region 6
02A0 0378	DRAE7	DMA Region Access Enable Register for Region 7
02A0 037C	DRAEH7	DMA Region Access Enable Register High for Region 7
02A0 0380	QRAE0	QDMA Region Access Enable Register for Region 0
02A0 0384	QRAE1	QDMA Region Access Enable Register for Region 1
02A0 0388	QRAE2	QDMA Region Access Enable Register for Region 2
02A0 038C	QRAE3	QDMA Region Access Enable Register for Region 3
02A0 0390	QRAE4	QDMA Region Access Enable Register for Region 4
02A0 0394	QRAE5	QDMA Region Access Enable Register for Region 5
02A0 0398	QRAE6	QDMA Region Access Enable Register for Region 6
02A0 039C	QRAE7	QDMA Region Access Enable Register for Region 7
02A0 0400	Q0E0	Event Queue 0 Entry Register 0
02A0 0404	Q0E1	Event Queue 0 Entry Register 1
02A0 0408	Q0E2	Event Queue 0 Entry Register 2
02A0 040C	Q0E3	Event Queue 0 Entry Register 3
02A0 0410	Q0E4	Event Queue 0 Entry Register 4
02A0 0414	Q0E5	Event Queue 0 Entry Register 5
02A0 0418	Q0E6	Event Queue 0 Entry Register 6
02A0 041C	Q0E7	Event Queue 0 Entry Register 7
02A0 0420	Q0E8	Event Queue 0 Entry Register 8
02A0 0424	Q0E9	Event Queue 0 Entry Register 9
02A0 0428	Q0E10	Event Queue 0 Entry Register 10
02A0 042C	Q0E11	Event Queue 0 Entry Register 11
02A0 0430	Q0E12	Event Queue 0 Entry Register 12
02A0 0434	Q0E13	Event Queue 0 Entry Register 13
02A0 0438	Q0E14	Event Queue 0 Entry Register 14
02A0 043C	Q0E15	Event Queue 0 Entry Register 15
02A0 0440	Q1E0	Event Queue 1 Entry Register 0
02A0 0444	Q1E1	Event Queue 1 Entry Register 1
02A0 0448	Q1E2	Event Queue 1 Entry Register 2
02A0 044C	Q1E3	Event Queue 1 Entry Register 3
02A0 0450	Q1E4	Event Queue 1 Entry Register 4
02A0 0454	Q1E5	Event Queue 1 Entry Register 5
02A0 0458	Q1E6	Event Queue 1 Entry Register 6
02A0 045C	Q1E7	Event Queue 1 Entry Register 7
02A0 0460	Q1E8	Event Queue 1 Entry Register 8
02A0 0464	Q1E9	Event Queue 1 Entry Register 9
02A0 0468	Q1E10	Event Queue 1 Entry Register 10
02A0 046C	Q1E11	Event Queue 1 Entry Register 11
02A0 0470	Q1E12	Event Queue 1 Entry Register 12
02A0 0474	Q1E13	Event Queue 1 Entry Register 13
02A0 0478	Q1E14	Event Queue 1 Entry Register 14
02A0 047C	Q1E15	Event Queue 1 Entry Register 15
02A0 0480	Q2E0	Event Queue 2 Entry Register 0
02A0 0484	Q2E1	Event Queue 2 Entry Register 1

Copyright © 2008–2011, Texas Instruments Incorporated

Table 7-5. EDMA3 Registers (continued)

HEX ADDRESS	ACRONYM	REGISTER NAME
02A0 0488	Q2E2	Event Queue 2 Entry Register 2
02A0 048C	Q2E3	Event Queue 2 Entry Register 3
02A0 0490	Q2E4	Event Queue 2 Entry Register 4
02A0 0494	Q2E5	Event Queue 2 Entry Register 5
02A0 0498	Q2E6	Event Queue 2 Entry Register 6
02A0 049C	Q2E7	Event Queue 2 Entry Register 7
02A0 04A0	Q2E8	Event Queue 2 Entry Register 8
02A0 04A4	Q2E9	Event Queue 2 Entry Register 9
02A0 04A8	Q2E10	Event Queue 2 Entry Register 10
02A0 04AC	Q2E11	Event Queue 2 Entry Register 11
02A0 04B0	Q2E12	Event Queue 2 Entry Register 12
02A0 04B4	Q2E13	Event Queue 2 Entry Register 13
02A0 04B8	Q2E14	Event Queue 2 Entry Register 14
02A0 04BC	Q2E15	Event Queue 2 Entry Register 15
02A0 04C0	Q3E0	Event Queue 3 Entry Register 0
02A0 04C4	Q3E1	Event Queue 3 Entry Register 1
02A0 04C8	Q3E2	Event Queue 3 Entry Register 2
02A0 04CC	Q3E3	Event Queue 3 Entry Register 3
02A0 04D0	Q3E4	Event Queue 3 Entry Register 4
02A0 04D4	Q3E5	Event Queue 3 Entry Register 5
02A0 04D8	Q3E6	Event Queue 3 Entry Register 6
02A0 04DC	Q3E7	Event Queue 3 Entry Register 7
02A0 04E0	Q3E8	Event Queue 3 Entry Register 8
02A0 04E4	Q3E9	Event Queue 3 Entry Register 9
02A0 04E8	Q3E10	Event Queue 3 Entry Register 10
02A0 04EC	Q3E11	Event Queue 3 Entry Register 11
02A0 04F0	Q3E12	Event Queue 3 Entry Register 12
02A0 04F4	Q3E13	Event Queue 3 Entry Register 13
02A0 04F8	Q3E14	Event Queue 3 Entry Register 14
02A0 04FC	Q3E15	Event Queue 3 Entry Register 15
02A0 0500	Q4E0	Event Queue 4 Entry Register 0
02A0 0504	Q4E1	Event Queue 4 Entry Register 1
02A0 0508	Q4E2	Event Queue 4 Entry Register 2
02A0 050C	Q4E3	Event Queue 4 Entry Register 3
02A0 0510	Q4E4	Event Queue 4 Entry Register 4
02A0 0514	Q4E5	Event Queue 4 Entry Register 5
02A0 0518	Q4E6	Event Queue 4 Entry Register 6
02A0 051C	Q4E7	Event Queue 4 Entry Register 7
02A0 0520	Q4E8	Event Queue 4 Entry Register 8
02A0 0524	Q4E9	Event Queue 4 Entry Register 9
02A0 0528	Q4E10	Event Queue 4 Entry Register 10
02A0 052C	Q4E11	Event Queue 4 Entry Register 11
02A0 0530	Q4E12	Event Queue 4 Entry Register 12
02A0 0534	Q4E13	Event Queue 4 Entry Register 13
02A0 0538	Q4E14	Event Queue 4 Entry Register 14
02A0 053C	Q4E15	Event Queue 4 Entry Register 15
02A0 0540	Q5E0	Event Queue 5 Entry Register 0

Copyright © 2008–2011, Texas Instruments Incorporated

Table 7-5. EDMA3 Registers (continued)

HEX ADDRESS	ACRONYM	REGISTER NAME
02A0 0544	Q5E1	Event Queue 5 Entry Register 1
02A0 0548	Q5E2	Event Queue 5 Entry Register 2
02A0 054C	Q5E3	Event Queue 5 Entry Register 3
02A0 0550	Q5E4	Event Queue 5 Entry Register 4
02A0 0554	Q5E5	Event Queue 5 Entry Register 5
02A0 0558	Q5E6	Event Queue 5 Entry Register 6
02A0 055C	Q5E7	Event Queue 5 Entry Register 7
02A0 0560	Q5E8	Event Queue 5 Entry Register 8
02A0 0564	Q5E9	Event Queue 5 Entry Register 9
02A0 0568	Q5E10	Event Queue 5 Entry Register 10
02A0 056C	Q5E11	Event Queue 5 Entry Register 11
02A0 0570	Q5E12	Event Queue 5 Entry Register 12
02A0 0574	Q5E13	Event Queue 5 Entry Register 13
02A0 0578	Q5E14	Event Queue 5 Entry Register 14
02A0 057C	Q5E15	Event Queue 5 Entry Register 15
02A0 0580 - 02A0 05FC	-	Reserved
02A0 0600	QSTAT0	Queue Status Register 0
02A0 0604	QSTAT1	Queue Status Register 1
02A0 0608	QSTAT2	Queue Status Register 2
02A0 060C	QSTAT3	Queue Status Register 3
02A0 0610	QSTAT4	Queue Status Register 4
02A0 0614	QSTAT5	Queue Status Register 5
02A0 0618 - 02A0 061C	-	Reserved
02A0 0620	QWMTHRA	Queue Watermark Threshold A Register
02A0 0624	QWMTHRB	Queue Watermark Threshold B Register
02A0 0628 - 02A0 063C	-	Reserved
02A0 0640	CCSTAT	EDMA3CC Status Register
02A0 0644 - 02A0 06FC	-	Reserved
02A0 0700 - 02A0 07FC	-	Reserved
02A0 0800	MPFAR	Memory Protection Fault Address Register
02A0 0804	MPFSR	Memory Protection Fault Status Register
02A0 0808	MPFCR	Memory Protection Fault Command Register
02A0 080C	MPPA0	Memory Protection Page Attribute Register 0
02A0 0810	MPPA1	Memory Protection Page Attribute Register 1
02A0 0814	MPPA2	Memory Protection Page Attribute Register 2
02A0 0818	MPPA3	Memory Protection Page Attribute Register 3
02A0 081C	MPPA4	Memory Protection Page Attribute Register 4
02A0 0820	MPPA5	Memory Protection Page Attribute Register 5
02A0 0824	MPPA6	Memory Protection Page Attribute Register 6
02A0 0828	MPPA7	Memory Protection Page Attribute Register 7
02A0 082C - 02A0 0FFC	-	Reserved
02A0 1000	ER	Event Register
02A0 1004	ERH	Event Register High
02A0 1008	ECR	Event Clear Register
02A0 100C	ECRH	Event Clear Register High
02A0 1010	ESR	Event Set Register
02A0 1014	ESRH	Event Set Register High

Copyright © 2008–2011, Texas Instruments Incorporated

Table 7-5. EDMA3 Registers (continued)

HEX ADDRESS	ACRONYM	REGISTER NAME
02A0 1018	CER	Chained Event Register
02A0 101C	CERH	Chained Event Register High
02A0 1020	EER	Event Enable Register
02A0 1024	EERH	Event Enable Register High
02A0 1028	EECR	Event Enable Clear Register
02A0 102C	EECRH	Event Enable Clear Register High
02A0 1030	EESR	Event Enable Set Register
02A0 1034	EESRH	Event Enable Set Register High
02A0 1038	SER	Secondary Event Register
02A0 103C	SERH	Secondary Event Register High
02A0 1040	SECR	Secondary Event Clear Register
02A0 1044	SECRH	Secondary Event Clear Register High
02A0 1048 - 02A0 104C	-	Reserved
02A0 1050	IER	Interrupt Enable Register
02A0 1054	IERH	Interrupt Enable High Register
02A0 1058	IECR	Interrupt Enable Clear Register
02A0 105C	IECRH	Interrupt Enable Clear High Register
02A0 1060	IESR	Interrupt Enable Set Register
02A0 1064	IESRH	Interrupt Enable Set High Register
02A0 1068	IPR	Interrupt Pending Register
02A0 106C	IPRH	Interrupt Pending High Register
02A0 1070	ICR	Interrupt Clear Register
02A0 1074	ICRH	Interrupt Clear High Register
02A0 1078	IEVAL	Interrupt Evaluate Register
02A0 107C	-	Reserved
02A0 1080	QER	QDMA Event Register
02A0 1084	QEER	QDMA Event Enable Register
02A0 1088	QEECR	QDMA Event Enable Clear Register
02A0 108C	QEESR	QDMA Event Enable Set Register
02A0 1090	QSER	QDMA Secondary Event Register
02A0 1094	QSECR	QDMA Secondary Event Clear Register
02A0 1098 - 02A0 1FFF	-	Reserved
Shadow Region 0 Channel Registers		
02A0 2000	ER	Event Register
02A0 2004	ERH	Event Register High
02A0 2008	ECR	Event Clear Register
02A0 200C	ECRH	Event Clear Register High
02A0 2010	ESR	Event Set Register
02A0 2014	ESRH	Event Set Register High
02A0 2018	CER	Chained Event Register
02A0 201C	CERH	Chained Event Register Hig
02A0 2020	EER	Event Enable Register
02A0 2024	EERH	Event Enable Register High
02A0 2028	EECR	Event Enable Clear Register
02A0 202C	EECRH	Event Enable Clear Register High
02A0 2030	EESR	Event Enable Set Register
02A0 2034	EESRH	Event Enable Set Register High

Copyright © 2008–2011, Texas Instruments Incorporated

Table 7-5. EDMA3 Registers (continued)

HEX ADDRESS	ACRONYM	REGISTER NAME
02A0 2038	SER	Secondary Event Register
02A0 203C	SERH	Secondary Event Register High
02A0 2040	SECR	Secondary Event Clear Register
02A0 2044	SECRH	Secondary Event Clear Register High
02A0 2048 - 02A0 204C	-	Reserved
02A0 2050	IER	Interrupt Enable Register
02A0 2054	IERH	Interrupt Enable Register High
02A0 2058	IECR	Interrupt Enable Clear Register
02A0 205C	IECRH	Interrupt Enable Clear Register High
02A0 2060	IESR	Interrupt Enable Set Register
02A0 2064	IESRH	Interrupt Enable Set Register High
02A0 2068	IPR	Interrupt Pending Register
02A0 206C	IPRH	Interrupt Pending Register High
02A0 2070	ICR	Interrupt Clear Register
02A0 2074	ICRH	Interrupt Clear Register High
02A0 2078	IEVAL	Interrupt Evaluate Register
02A0 207C	-	Reserved
02A0 2080	QER	QDMA Event Register
02A0 2084	QEER	QDMA Event Enable Register
02A0 2088	QEECR	QDMA Event Enable Clear Register
02A0 208C	QEESR	QDMA Event Enable Set Register
02A0 2090	QSER	QDMA Secondary Event Register
02A0 2094	QSECR	QDMA Secondary Event Clear Register
02A0 2098 - 02A0 21FF	-	Reserved
Shadow Region 1 Channel Registers		
02A0 2200	ER	Event Register
02A0 2204	ERH	Event Register High
02A0 2208	ECR	Event Clear Register
02A0 220C	ECRH	Event Clear Register High
02A0 2210	ESR	Event Set Register
02A0 2214	ESRH	Event Set Register High
02A0 2218	CER	Chained Event Register
02A0 221C	CERH	Chained Event Register Hig
02A0 2220	EER	Event Enable Register
02A0 2224	EERH	Event Enable Register High
02A0 2228	EECR	Event Enable Clear Register
02A0 222C	EECRH	Event Enable Clear Register High
02A0 2230	EESR	Event Enable Set Register
02A0 2234	EESRH	Event Enable Set Register High
02A0 2238	SER	Secondary Event Register
02A0 223C	SERH	Secondary Event Register High
02A0 2240	SECR	Secondary Event Clear Register
02A0 2244	SECRH	Secondary Event Clear Register High
02A0 2248 - 02A0 224C	-	Reserved
02A0 2250	IER	Interrupt Enable Register
02A0 2254	IERH	Interrupt Enable Register High
02A0 2258	IECR	Interrupt Enable Clear Register

Copyright © 2008–2011, Texas Instruments Incorporated

Table 7-5. EDMA3 Registers (continued)

HEX ADDRESS	ACRONYM	REGISTER NAME
02A0 225C	IECRH	Interrupt Enable Clear Register High
02A0 2260	IESR	Interrupt Enable Set Register
02A0 2264	IESRH	Interrupt Enable Set Register High
02A0 2268	IPR	Interrupt Pending Register
02A0 226C	IPRH	Interrupt Pending Register High
02A0 2270	ICR	Interrupt Clear Register
02A0 2274	ICRH	Interrupt Clear Register High
02A0 2278	IEVAL	Interrupt Evaluate Register
02A0 227C	-	Reserved
02A0 2280	QER	QDMA Event Register
02A0 2284	QEER	QDMA Event Enable Register
02A0 2288	QEECR	QDMA Event Enable Clear Register
02A0 228C	QEESR	QDMA Event Enable Set Register
02A0 2290	QSER	QDMA Secondary Event Register
02A0 2294	QSECR	QDMA Secondary Event Clear Register
02A0 2298 - 02A0 23FF	-	Reserved
Shadow Region 2 Channel Registers		
02A0 2400	ER	Event Register
02A0 2404	ERH	Event Register High
02A0 2408	ECR	Event Clear Register
02A0 240C	ECRH	Event Clear Register High
02A0 2410	ESR	Event Set Register
02A0 2414	ESRH	Event Set Register High
02A0 2418	CER	Chained Event Register
02A0 241C	CERH	Chained Event Register Hig
02A0 2420	EER	Event Enable Register
02A0 2424	EERH	Event Enable Register High
02A0 2428	EECR	Event Enable Clear Register
02A0 242C	EECRH	Event Enable Clear Register High
02A0 2430	EESR	Event Enable Set Register
02A0 2434	EESRH	Event Enable Set Register High
02A0 2438	SER	Secondary Event Register
02A0 243C	SERH	Secondary Event Register High
02A0 2440	SECR	Secondary Event Clear Register
02A0 2444	SECRH	Secondary Event Clear Register High
02A0 2448 - 02A0 244C	-	Reserved
02A0 2450	IER	Interrupt Enable Register
02A0 2454	IERH	Interrupt Enable Register High
02A0 2458	IECR	Interrupt Enable Clear Register
02A0 245C	IECRH	Interrupt Enable Clear Register High
02A0 2460	IESR	Interrupt Enable Set Register
02A0 2464	IESRH	Interrupt Enable Set Register High
02A0 2468	IPR	Interrupt Pending Register
02A0 246C	IPRH	Interrupt Pending Register High
02A0 2470	ICR	Interrupt Clear Register
02A0 2474	ICRH	Interrupt Clear Register High
02A0 2478	IEVAL	Interrupt Evaluate Register

Copyright © 2008–2011, Texas Instruments Incorporated

Table 7-5. EDMA3 Registers (continued)

HEX ADDRESS	ACRONYM	REGISTER NAME
02A0 247C	-	Reserved
02A0 2480	QER	QDMA Event Register
02A0 2484	QEER	QDMA Event Enable Register
02A0 2488	QEECR	QDMA Event Enable Clear Register
02A0 248C	QEESR	QDMA Event Enable Set Register
02A0 2490	QSER	QDMA Secondary Event Register
02A0 2494	QSECR	QDMA Secondary Event Clear Register
02A0 2498 - 02A0 25FF	-	Reserved
Shadow Region 3 Channel Registers		
02A0 2600	ER	Event Register
02A0 2604	ERH	Event Register High
02A0 2608	ECR	Event Clear Register
02A0 260C	ECRH	Event Clear Register High
02A0 2610	ESR	Event Set Register
02A0 2614	ESRH	Event Set Register High
02A0 2618	CER	Chained Event Register
02A0 261C	CERH	Chained Event Register Hig
02A0 2620	EER	Event Enable Register
02A0 2624	EERH	Event Enable Register High
02A0 2628	EECR	Event Enable Clear Register
02A0 262C	EECRH	Event Enable Clear Register High
02A0 2630	EESR	Event Enable Set Register
02A0 2634	EESRH	Event Enable Set Register High
02A0 2638	SER	Secondary Event Register
02A0 263C	SERH	Secondary Event Register High
02A0 2640	SECR	Secondary Event Clear Register
02A0 2644	SECRH	Secondary Event Clear Register High
02A0 2648 - 02A0 264C	-	Reserved
02A0 2650	IER	Interrupt Enable Register
02A0 2654	IERH	Interrupt Enable Register High
02A0 2658	IECR	Interrupt Enable Clear Register
02A0 265C	IECRH	Interrupt Enable Clear Register High
02A0 2660	IESR	Interrupt Enable Set Register
02A0 2664	IESRH	Interrupt Enable Set Register High
02A0 2668	IPR	Interrupt Pending Register
02A0 266C	IPRH	Interrupt Pending Register High
02A0 2670	ICR	Interrupt Clear Register
02A0 2674	ICRH	Interrupt Clear Register High
02A0 2678	IEVAL	Interrupt Evaluate Register
02A0 267C	-	Reserved
02A0 2680	QER	QDMA Event Register
02A0 2684	QEER	QDMA Event Enable Register
02A0 2688	QEECR	QDMA Event Enable Clear Register
02A0 268C	QEESR	QDMA Event Enable Set Register
02A0 2690	QSER	QDMA Secondary Event Register
02A0 2694	QSECR	QDMA Secondary Event Clear Register
02A0 2698 - 02A0 27FF	-	Reserved

Copyright © 2008–2011, Texas Instruments Incorporated

Table 7-5. EDMA3 Registers (continued)

HEX ADDRESS	ACRONYM	REGISTER NAME
Shadow Region 4 Channel Registers		
02A0 2800	ER	Event Register
02A0 2804	ERH	Event Register High
02A0 2808	ECR	Event Clear Register
02A0 280C	ECRH	Event Clear Register High
02A0 2810	ESR	Event Set Register
02A0 2814	ESRH	Event Set Register High
02A0 2818	CER	Chained Event Register
02A0 281C	CERH	Chained Event Register Hig
02A0 2820	EER	Event Enable Register
02A0 2824	EERH	Event Enable Register High
02A0 2828	EECR	Event Enable Clear Register
02A0 282C	EECRH	Event Enable Clear Register High
02A0 2830	EESR	Event Enable Set Register
02A0 2834	EESRH	Event Enable Set Register High
02A0 2838	SER	Secondary Event Register
02A0 283C	SERH	Secondary Event Register High
02A0 2840	SECR	Secondary Event Clear Register
02A0 2844	SECRH	Secondary Event Clear Register High
02A0 2848 - 02A0 284C	-	Reserved
02A0 2850	IER	Interrupt Enable Register
02A0 2854	IERH	Interrupt Enable Register High
02A0 2858	IECR	Interrupt Enable Clear Register
02A0 285C	IECRH	Interrupt Enable Clear Register High
02A0 2860	IESR	Interrupt Enable Set Register
02A0 2864	IESRH	Interrupt Enable Set Register High
02A0 2868	IPR	Interrupt Pending Register
02A0 286C	IPRH	Interrupt Pending Register High
02A0 2870	ICR	Interrupt Clear Register
02A0 2874	ICRH	Interrupt Clear Register High
02A0 2878	IEVAL	Interrupt Evaluate Register
02A0 287C	-	Reserved
02A0 2880	QER	QDMA Event Register
02A0 2884	QEER	QDMA Event Enable Register
02A0 2888	QEECR	QDMA Event Enable Clear Register
02A0 288C	QEESR	QDMA Event Enable Set Register
02A0 2890	QSER	QDMA Secondary Event Register
02A0 2894	QSECR	QDMA Secondary Event Clear Register
02A0 2898 - 02A0 29FF	-	Reserved
Shadow Region 5 Channel Registers		
02A0 2A00	ER	Event Register
02A0 2A04	ERH	Event Register High
02A0 2A08	ECR	Event Clear Register
02A0 2A0C	ECRH	Event Clear Register High
02A0 2A10	ESR	Event Set Register
02A0 2A14	ESRH	Event Set Register High
02A0 2A18	CER	Chained Event Register

Copyright © 2008–2011, Texas Instruments Incorporated

Table 7-5. EDMA3 Registers (continued)

HEX ADDRESS	ACRONYM	REGISTER NAME
02A0 2A1C	CERH	Chained Event Register Hig
02A0 2A20	EER	Event Enable Register
02A0 2A24	EERH	Event Enable Register High
02A0 2A28	EECR	Event Enable Clear Register
02A0 2A2C	EECRH	Event Enable Clear Register High
02A0 2A30	EESR	Event Enable Set Register
02A0 2A34	EESRH	Event Enable Set Register High
02A0 2A38	SER	Secondary Event Register
02A0 2A3C	SERH	Secondary Event Register High
02A0 2A40	SECR	Secondary Event Clear Register
02A0 2A44	SECRH	Secondary Event Clear Register High
02A0 2A48 - 02A0 2A4C	-	Reserved
02A0 2A50	IER	Interrupt Enable Register
02A0 2A54	IERH	Interrupt Enable Register High
02A0 2A58	IECR	Interrupt Enable Clear Register
02A0 2A5C	IECRH	Interrupt Enable Clear Register High
02A0 2A60	IESR	Interrupt Enable Set Register
02A0 2A64	IESRH	Interrupt Enable Set Register High
02A0 2A68	IPR	Interrupt Pending Register
02A0 2A6C	IPRH	Interrupt Pending Register High
02A0 2A70	ICR	Interrupt Clear Register
02A0 2A74	ICRH	Interrupt Clear Register High
02A0 2A78	IEVAL	Interrupt Evaluate Register
02A0 2A7C	-	Reserved
02A0 2A80	QER	QDMA Event Register
02A0 2A84	QEER	QDMA Event Enable Register
02A0 2A88	QEECR	QDMA Event Enable Clear Register
02A0 2A8C	QEESR	QDMA Event Enable Set Register
02A0 2A90	QSER	QDMA Secondary Event Register
02A0 2A94	QSECR	QDMA Secondary Event Clear Register
02A0 2A98 - 02A0 2BFF	-	Reserved
Shadow Region 6 Channel Registers		
02A0 2C00	ER	Event Register
02A0 2C04	ERH	Event Register High
02A0 2C08	ECR	Event Clear Register
02A0 2C0C	ECRH	Event Clear Register High
02A0 2C10	ESR	Event Set Register
02A0 2C14	ESRH	Event Set Register High
02A0 2C18	CER	Chained Event Register
02A0 2C1C	CERH	Chained Event Register Hig
02A0 2C20	EER	Event Enable Register
02A0 2C24	EERH	Event Enable Register High
02A0 2C28	EECR	Event Enable Clear Register
02A0 2C2C	EECRH	Event Enable Clear Register High
02A0 2C30	EESR	Event Enable Set Register
02A0 2C34	EESRH	Event Enable Set Register High
02A0 2C38	SER	Secondary Event Register

Copyright © 2008–2011, Texas Instruments Incorporated

Table 7-5. EDMA3 Registers (continued)

HEX ADDRESS	ACRONYM	REGISTER NAME
02A0 2C3C	SERH	Secondary Event Register High
02A0 2C40	SECR	Secondary Event Clear Register
02A0 2C44	SECRH	Secondary Event Clear Register High
02A0 2C48 - 02A0 2C4C	-	Reserved
02A0 2C50	IER	Interrupt Enable Register
02A0 2C54	IERH	Interrupt Enable Register High
02A0 2C58	IECR	Interrupt Enable Clear Register
02A0 2C5C	IECRH	Interrupt Enable Clear Register High
02A0 2C60	IESR	Interrupt Enable Set Register
02A0 2C64	IESRH	Interrupt Enable Set Register High
02A0 2C68	IPR	Interrupt Pending Register
02A0 2C6C	IPRH	Interrupt Pending Register High
02A0 2C70	ICR	Interrupt Clear Register
02A0 2C74	ICRH	Interrupt Clear Register High
02A0 2C78	IEVAL	Interrupt Evaluate Register
02A0 2C7C	-	Reserved
02A0 2C80	QER	QDMA Event Register
02A0 2C84	QEER	QDMA Event Enable Register
02A0 2C88	QEECR	QDMA Event Enable Clear Register
02A0 2C8C	QEESR	QDMA Event Enable Set Register
02A0 2C90	QSER	QDMA Secondary Event Register
02A0 2C94	QSECR	QDMA Secondary Event Clear Register
02A0 2C98 - 02A0 2DFF	-	Reserved
Shadow Region 7 Channel Registers		
02A0 2E00	ER	Event Register
02A0 2E04	ERH	Event Register High
02A0 2E08	ECR	Event Clear Register
02A0 2E0C	ECRH	Event Clear Register High
02A0 2E10	ESR	Event Set Register
02A0 2E14	ESRH	Event Set Register High
02A0 2E18	CER	Chained Event Register
02A0 2E1C	CERH	Chained Event Register Hig
02A0 2E20	EER	Event Enable Register
02A0 2E24	EERH	Event Enable Register High
02A0 2E28	EECR	Event Enable Clear Register
02A0 2E2C	EECRH	Event Enable Clear Register High
02A0 2E30	EESR	Event Enable Set Register
02A0 2E34	EESRH	Event Enable Set Register High
02A0 2E38	SER	Secondary Event Register
02A0 2E3C	SERH	Secondary Event Register High
02A0 2E40	SECR	Secondary Event Clear Register
02A0 2E44	SECRH	Secondary Event Clear Register High
02A0 2E48 - 02A0 2E4C	-	Reserved
02A0 2E50	IER	Interrupt Enable Register
02A0 2E54	IERH	Interrupt Enable Register High
02A0 2E58	IECR	Interrupt Enable Clear Register
02A0 2E5C	IECRH	Interrupt Enable Clear Register High

Copyright © 2008–2011, Texas Instruments Incorporated

Table 7-5. EDMA3 Registers (continued)

HEX ADDRESS	ACRONYM	REGISTER NAME
02A0 2E60	IESR	Interrupt Enable Set Register
02A0 2E64	IESRH	Interrupt Enable Set Register High
02A0 2E68	IPR	Interrupt Pending Register
02A0 2E6C	IPRH	Interrupt Pending Register High
02A0 2E70	ICR	Interrupt Clear Register
02A0 2E74	ICRH	Interrupt Clear Register High
02A0 2E78	IEVAL	Interrupt Evaluate Register
02A0 2E7C	-	Reserved
02A0 2E80	QER	QDMA Event Register
02A0 2E84	QEER	QDMA Event Enable Register
02A0 2E88	QEECR	QDMA Event Enable Clear Register
02A0 2E8C	QEESR	QDMA Event Enable Set Register
02A0 2E90	QSER	QDMA Secondary Event Register
02A0 2E94	QSECR	QDMA Secondary Event Clear Register
02A0 2E98 - 02A0 2FFF	-	Reserved

Copyright © 2008–2011, Texas Instruments Incorporated

Table 7-6. EDMA3 Parameter RAM

HEX ADDRESS	ACRONYM	REGISTER NAME
02A0 4000 - 02A0 401F		Parameter Set 0
02A0 4020 - 02A0 403F		Parameter Set 1
02A0 4040 - 02A0 405F		Parameter Set 2
02A0 4060 - 02A0 407F		Parameter Set 3
02A0 4080 - 02A0 409F		Parameter Set 4
02A0 40A0 - 02A0 40BF		Parameter Set 5
02A0 40C0 - 02A0 40DF		Parameter Set 6
02A0 40E0 - 02A0 40FF		Parameter Set 7
02A0 4100 - 02A0 411F		Parameter Set 8
02A0 4120 - 02A0 413F		Parameter Set 9
...		...
02A0 47E0 - 02A0 47FF		Parameter Set 63
02A0 4800 - 02A0 481F		Parameter Set 64
02A0 4820 - 02A0 483F		Parameter Set 65
...		...
02A0 5FC0 - 02A0 5FDF		Parameter Set 254
02A0 5FE0 - 02A0 5FFF		Parameter Set 255

Table 7-7. EDMA3 Transfer Controller 0 Registers

HEX ADDRESS RANGE	ACRONYM	REGISTER NAME
02A2 0000	PID	Peripheral Identification Register
02A2 0004	TCCFG	EDMA3TC Configuration Register
02A2 0008 - 02A2 00FC	-	Reserved
02A2 0100	TCSTAT	EDMA3TC Channel Status Register
02A2 0104 - 02A2 011C	-	Reserved
02A2 0120	ERRSTAT	Error Register
02A2 0124	ERREN	Error Enable Register
02A2 0128	ERRCLR	Error Clear Register
02A2 012C	ERRDET	Error Details Register
02A2 0130	ERRCMD	Error Interrupt Command Register
02A2 0134 - 02A2 013C	-	Reserved
02A2 0140	RDRATE	Read Rate Register
02A2 0144 - 02A2 023C	-	Reserved
02A2 0240	SAOPT	Source Active Options Register
02A2 0244	SASRC	Source Active Source Address Register
02A2 0248	SACNT	Source Active Count Register
02A2 024C	SADST	Source Active Destination Address Register
02A2 0250	SABIDX	Source Active Source B-Index Register
02A2 0254	SAMPPRXY	Source Active Memory Protection Proxy Register
02A2 0258	SACNTRLD	Source Active Count Reload Register
02A2 025C	SASRCBREF	Source Active Source Address B-Reference Register
02A2 0260	SADSTBREF	Source Active Destination Address B-Reference Register
02A2 0264 - 02A2 027C	-	Reserved
02A2 0280	DFCNTRLD	Destination FIFO Set Count Reload
02A2 0284	DFSRCBREF	Destination FIFO Set Destination Address B Reference Register
02A2 0288	DFDSTBREF	Destination FIFO Set Destination Address B Reference Register
02A2 028C - 02A2 02FC	-	Reserved

Copyright © 2008–2011, Texas Instruments Incorporated

Table 7-7. EDMA3 Transfer Controller 0 Registers (continued)

HEX ADDRESS RANGE	ACRONYM	REGISTER NAME
02A2 0300	DFOPT0	Destination FIFO Options Register 0
02A2 0304	DFSRC0	Destination FIFO Source Address Register 0
02A2 0308	DFCNT0	Destination FIFO Count Register 0
02A2 030C	DFDST0	Destination FIFO Destination Address Register 0
02A2 0310	DFBIDX0	Destination FIFO BIDX Register 0
02A2 0314	DFMPPRXY0	Destination FIFO Memory Protection Proxy Register 0
02A2 0318 - 02A2 033C	-	Reserved
02A2 0340	DFOPT1	Destination FIFO Options Register 1
02A2 0344	DFSRC1	Destination FIFO Source Address Register 1
02A2 0348	DFCNT1	Destination FIFO Count Register 1
02A2 034C	DFDST1	Destination FIFO Destination Address Register 1
02A2 0350	DFBIDX1	Destination FIFO BIDX Register 1
02A2 0354	DFMPPRXY1	Destination FIFO Memory Protection Proxy Register 1
02A2 0358 - 02A2 037C	-	Reserved
02A2 0380	DFOPT2	Destination FIFO Options Register 2
02A2 0384	DFSRC2	Destination FIFO Source Address Register 2
02A2 0388	DFCNT2	Destination FIFO Count Register 2
02A2 038C	DFDST2	Destination FIFO Destination Address Register 2
02A2 0390	DFBIDX2	Destination FIFO BIDX Register 2
02A2 0394	DFMPPRXY2	Destination FIFO Memory Protection Proxy Register 2
02A2 0398 - 02A2 03BC	-	Reserved
02A2 03C0	DFOPT3	Destination FIFO Options Register 3
02A2 03C4	DFSRC3	Destination FIFO Source Address Register 3
02A2 03C8	DFCNT3	Destination FIFO Count Register 3
02A2 03CC	DFDST3	Destination FIFO Destination Address Register 3
02A2 03D0	DFBIDX3	Destination FIFO BIDX Register 3
02A2 03D4	DFMPPRXY3	Destination FIFO Memory Protection Proxy Register 3
02A2 03D8 - 02A2 7FFC	-	Reserved

Table 7-8. EDMA3 Transfer Controller 1 Registers

HEX ADDRESS RANGE	ACRONYM	REGISTER NAME
02A2 8000	PID	Peripheral Identification Register
02A2 8004	TCCFG	EDMA3TC Configuration Register
02A2 8008 - 02A2 80FC	-	Reserved
02A2 8100	TCSTAT	EDMA3TC Channel Status Register
02A2 8104 - 02A2 811C	-	Reserved
02A2 8120	ERRSTAT	Error Register
02A2 8124	ERREN	Error Enable Register
02A2 8128	ERRCLR	Error Clear Register
02A2 812C	ERRDET	Error Details Register
02A2 8130	ERRCMD	Error Interrupt Command Register
02A2 8134 - 02A2 813C	-	Reserved
02A2 8140	RDRATE	Read Rate Register
02A2 8144 - 02A2 823C	-	Reserved
02A2 8240	SAOPT	Source Active Options Register
02A2 8244	SASRC	Source Active Source Address Register
02A2 8248	SACNT	Source Active Count Register

Copyright © 2008–2011, Texas Instruments Incorporated

Table 7-8. EDMA3 Transfer Controller 1 Registers (continued)

HEX ADDRESS RANGE	ACRONYM	REGISTER NAME
02A2 824C	SADST	Source Active Destination Address Register
02A2 8250	SABIDX	Source Active Source B-Index Register
02A2 8254	SAMPPRXY	Source Active Memory Protection Proxy Register
02A2 8258	SACNTRLD	Source Active Count Reload Register
02A2 825C	SASRCBREF	Source Active Source Address B-Reference Register
02A2 8260	SADSTBREF	Source Active Destination Address B-Reference Register
02A2 8264 - 02A2 827C	-	Reserved
02A2 8280	DFCNTRLD	Destination FIFO Set Count Reload
02A2 8284	DFSRCBREF	Destination FIFO Set Destination Address B Reference Register
02A2 8288	DFDSTBREF	Destination FIFO Set Destination Address B Reference Register
02A2 828C - 02A2 82FC	-	Reserved
02A2 8300	DFOPT0	Destination FIFO Options Register 0
02A2 8304	DFSRC0	Destination FIFO Source Address Register 0
02A2 8308	DFCNT0	Destination FIFO Count Register 0
02A2 830C	DFDST0	Destination FIFO Destination Address Register 0
02A2 8310	DFBIDX0	Destination FIFO BIDX Register 0
02A2 8314	DFMPPRXY0	Destination FIFO Memory Protection Proxy Register 0
02A2 8318 - 02A2 833C	-	Reserved
02A2 8340	DFOPT1	Destination FIFO Options Register 1
02A2 8344	DFSRC1	Destination FIFO Source Address Register 1
02A2 8348	DFCNT1	Destination FIFO Count Register 1
02A2 834C	DFDST1	Destination FIFO Destination Address Register 1
02A2 8350	DFBIDX1	Destination FIFO BIDX Register 1
02A2 8354	DFMPPRXY1	Destination FIFO Memory Protection Proxy Register 1
02A2 8358 - 02A2 837C	-	Reserved
02A2 8380	DFOPT2	Destination FIFO Options Register 2
02A2 8384	DFSRC2	Destination FIFO Source Address Register 2
02A2 8388	DFCNT2	Destination FIFO Count Register 2
02A2 838C	DFDST2	Destination FIFO Destination Address Register 2
02A2 8390	DFBIDX2	Destination FIFO BIDX Register 2
02A2 8394	DFMPPRXY2	Destination FIFO Memory Protection Proxy Register 2
02A2 8398 - 02A2 83BC	-	Reserved
02A2 83C0	DFOPT3	Destination FIFO Options Register 3
02A2 83C4	DFSRC3	Destination FIFO Source Address Register 3
02A2 83C8	DFCNT3	Destination FIFO Count Register 3
02A2 83CC	DFDST3	Destination FIFO Destination Address Register 3
02A2 83D0	DFBIDX3	Destination FIFO BIDX Register 3
02A2 83D4	DFMPPRXY3	Destination FIFO Memory Protection Proxy Register 3
02A2 83D8 - 02A2 FFFC	-	Reserved

Copyright © 2008–2011, Texas Instruments Incorporated

Table 7-9. EDMA3 Transfer Controller 2 Registers

HEX ADDRESS RANGE	ACRONYM	REGISTER NAME
02A3 0000	PID	Peripheral Identification Register
02A3 0004	TCCFG	EDMA3TC Configuration Register
02A3 0008 - 02A3 00FC	-	Reserved
02A3 0100	TCSTAT	EDMA3TC Channel Status Register
02A3 0104 - 02A3 011C	-	Reserved
02A3 0120	ERRSTAT	Error Register
02A3 0124	ERREN	Error Enable Register
02A3 0128	ERRCLR	Error Clear Register
02A3 012C	ERRDET	Error Details Register
02A3 0130	ERRCMD	Error Interrupt Command Register
02A3 0134 - 02A3 013C	-	Reserved
02A3 0140	RDRATE	Read Rate Register
02A3 0144 - 02A3 023C	-	Reserved
02A3 0240	SAOPT	Source Active Options Register
02A3 0244	SASRC	Source Active Source Address Register
02A3 0248	SACNT	Source Active Count Register
02A3 024C	SADST	Source Active Destination Address Register
02A3 0250	SABIDX	Source Active Source B-Index Register
02A3 0254	SAMPPRXY	Source Active Memory Protection Proxy Register
02A3 0258	SACNTRLD	Source Active Count Reload Register
02A3 025C	SASRCBREF	Source Active Source Address B-Reference Register
02A3 0260	SADSTBREF	Source Active Destination Address B-Reference Register
02A3 0264 - 02A3 027C	-	Reserved
02A3 0280	DFCNTRLD	Destination FIFO Set Count Reload
02A3 0284	DFSRCBREF	Destination FIFO Set Destination Address B Reference Register
02A3 0288	DFDSTBREF	Destination FIFO Set Destination Address B Reference Register
02A3 028C - 02A3 02FC	-	Reserved
02A3 0300	DFOPT0	Destination FIFO Options Register 0
02A3 0304	DFSRC0	Destination FIFO Source Address Register 0
02A3 0308	DFCNT0	Destination FIFO Count Register 0
02A3 030C	DFDST0	Destination FIFO Destination Address Register 0
02A3 0310	DFBIDX0	Destination FIFO BIDX Register 0
02A3 0314	DFMPPRXY0	Destination FIFO Memory Protection Proxy Register 0
02A3 0318 - 02A3 033C	-	Reserved
02A3 0340	DFOPT1	Destination FIFO Options Register 1
02A3 0344	DFSRC1	Destination FIFO Source Address Register 1
02A3 0348	DFCNT1	Destination FIFO Count Register 1
02A3 034C	DFDST1	Destination FIFO Destination Address Register 1
02A3 0350	DFBIDX1	Destination FIFO BIDX Register 1
02A3 0354	DFMPPRXY1	Destination FIFO Memory Protection Proxy Register 1
02A3 0358 - 02A3 037C	-	Reserved
02A3 0380	DFOPT2	Destination FIFO Options Register 2
02A3 0384	DFSRC2	Destination FIFO Source Address Register 2
02A3 0388	DFCNT2	Destination FIFO Count Register 2
02A3 038C	DFDST2	Destination FIFO Destination Address Register 2
02A3 0390	DFBIDX2	Destination FIFO BIDX Register 2
02A3 0394	DFMPPRXY2	Destination FIFO Memory Protection Proxy Register 2

Copyright © 2008–2011, Texas Instruments Incorporated

Table 7-9. EDMA3 Transfer Controller 2 Registers (continued)

HEX ADDRESS RANGE	ACRONYM	REGISTER NAME
02A3 0398 - 02A3 03BC	-	Reserved
02A3 03C0	DFOPT3	Destination FIFO Options Register 3
02A3 03C4	DFSRC3	Destination FIFO Source Address Register 3
02A3 03C8	DFCNT3	Destination FIFO Count Register 3
02A3 03CC	DFDST3	Destination FIFO Destination Address Register 3
02A3 03D0	DFBIDX3	Destination FIFO BIDX Register 3
02A3 03D4	DFMPPRXY3	Destination FIFO Memory Protection Proxy Register 3
02A3 03D8 - 02A3 7FFC	-	Reserved

Table 7-10. EDMA3 Transfer Controller 3 Registers

HEX ADDRESS RANGE	ACRONYM	REGISTER NAME
02A3 8000	PID	Peripheral Identification Register
02A3 8004	TCCFG	EDMA3TC Configuration Register
02A3 8008 - 02A3 80FC	-	Reserved
02A3 8100	TCSTAT	EDMA3TC Channel Status Register
02A3 8104 - 02A3 811C	-	Reserved
02A3 8120	ERRSTAT	Error Register
02A3 8124	ERREN	Error Enable Register
02A3 8128	ERRCLR	Error Clear Register
02A3 812C	ERRDET	Error Details Register
02A3 8130	ERRCMD	Error Interrupt Command Register
02A3 8134 - 02A3 813C	-	Reserved
02A3 8140	RDRATE	Read Rate Register
02A3 8144 - 02A3 823C	-	Reserved
02A3 8240	SAOPT	Source Active Options Register
02A3 8244	SASRC	Source Active Source Address Register
02A3 8248	SACNT	Source Active Count Register
02A3 824C	SADST	Source Active Destination Address Register
02A3 8250	SABIDX	Source Active Source B-Index Register
02A3 8254	SAMPPRXY	Source Active Memory Protection Proxy Register
02A3 8258	SACNTRLD	Source Active Count Reload Register
02A3 825C	SASRCBREF	Source Active Source Address B-Reference Register
02A3 8260	SADSTBREF	Source Active Destination Address B-Reference Register
02A3 8264 - 02A3 827C	-	Reserved
02A3 8280	DFCNTRLD	Destination FIFO Set Count Reload
02A3 8284	DFSRCBREF	Destination FIFO Set Destination Address B Reference Register
02A3 8288	DFDSTBREF	Destination FIFO Set Destination Address B Reference Register
02A3 828C - 02A3 82FC	-	Reserved
02A3 8300	DFOPT0	Destination FIFO Options Register 0
02A3 8304	DFSRC0	Destination FIFO Source Address Register 0
02A3 8308	DFCNT0	Destination FIFO Count Register 0
02A3 830C	DFDST0	Destination FIFO Destination Address Register 0
02A3 8310	DFBIDX0	Destination FIFO BIDX Register 0
02A3 8314	DFMPPRXY0	Destination FIFO Memory Protection Proxy Register 0
02A3 8318 - 02A3 833C	-	Reserved
02A3 8340	DFOPT1	Destination FIFO Options Register 1
02A3 8344	DFSRC1	Destination FIFO Source Address Register 1

Copyright © 2008–2011, Texas Instruments Incorporated

Table 7-10. EDMA3 Transfer Controller 3 Registers (continued)

HEX ADDRESS RANGE	ACRONYM	REGISTER NAME
02A3 8348	DFCNT1	Destination FIFO Count Register 1
02A3 834C	DFDST1	Destination FIFO Destination Address Register 1
02A3 8350	DFBIDX1	Destination FIFO BIDX Register 1
02A3 8354	DFMPPRXY1	Destination FIFO Memory Protection Proxy Register 1
02A3 8358 - 02A3 837C	-	Reserved
02A3 8380	DFOPT2	Destination FIFO Options Register 2
02A3 8384	DFSRC2	Destination FIFO Source Address Register 2
02A3 8388	DFCNT2	Destination FIFO Count Register 2
02A3 838C	DFDST2	Destination FIFO Destination Address Register 2
02A3 8390	DFBIDX2	Destination FIFO BIDX Register 2
02A3 8394	DFMPPRXY2	Destination FIFO Memory Protection Proxy Register 2
02A3 8398 - 02A3 83BC	-	Reserved
02A3 83C0	DFOPT3	Destination FIFO Options Register 3
02A3 83C4	DFSRC3	Destination FIFO Source Address Register 3
02A3 83C8	DFCNT3	Destination FIFO Count Register 3
02A3 83CC	DFDST3	Destination FIFO Destination Address Register 3
02A3 83D0	DFBIDX3	Destination FIFO BIDX Register 3
02A3 83D4	DFMPPRXY3	Destination FIFO Memory Protection Proxy Register 3
02A3 83D8 - 02A3 FFFC	-	Reserved

Table 7-11. EDMA3 Transfer Controller 4 Registers

HEX ADDRESS RANGE	ACRONYM	REGISTER NAME
02A4 0000	PID	Peripheral Identification Register
02A4 0004	TCCFG	EDMA3TC Configuration Register
02A4 0008 - 02A4 00FC	-	Reserved
02A4 0100	TCSTAT	EDMA3TC Channel Status Register
02A4 0104 - 02A4 011C	-	Reserved
02A4 0120	ERRSTAT	Error Register
02A4 0124	ERREN	Error Enable Register
02A4 0128	ERRCLR	Error Clear Register
02A4 012C	ERRDET	Error Details Register
02A4 0130	ERRCMD	Error Interrupt Command Register
02A4 0134 - 02A4 013C	-	Reserved
02A4 0140	RDRATE	Read Rate Register
02A4 0144 - 02A4 023C	-	Reserved
02A4 0240	SAOPT	Source Active Options Register
02A4 0244	SASRC	Source Active Source Address Register
02A4 0248	SACNT	Source Active Count Register
02A4 024C	SADST	Source Active Destination Address Register
02A4 0250	SABIDX	Source Active Source B-Index Register
02A4 0254	SAMPPRXY	Source Active Memory Protection Proxy Register
02A4 0258	SACNTRLD	Source Active Count Reload Register
02A4 025C	SASRCBREF	Source Active Source Address B-Reference Register
02A4 0260	SADSTBREF	Source Active Destination Address B-Reference Register
02A4 0264 - 02A4 027C	-	Reserved
02A4 0280	DFCNTRLD	Destination FIFO Set Count Reload
02A4 0284	DFSRCBREF	Destination FIFO Set Destination Address B Reference Register

Copyright © 2008–2011, Texas Instruments Incorporated

Table 7-11. EDMA3 Transfer Controller 4 Registers (continued)

HEX ADDRESS RANGE	ACRONYM	REGISTER NAME
02A4 0288	DFDSTBREF	Destination FIFO Set Destination Address B Reference Register
02A4 028C - 02A4 02FC	-	Reserved
02A4 0300	DFOPT0	Destination FIFO Options Register 0
02A4 0304	DFSRC0	Destination FIFO Source Address Register 0
02A4 0308	DFCNT0	Destination FIFO Count Register 0
02A4 030C	DFDST0	Destination FIFO Destination Address Register 0
02A4 0310	DFBIDX0	Destination FIFO BIDX Register 0
02A4 0314	DFMPPRXY0	Destination FIFO Memory Protection Proxy Register 0
02A4 0318 - 02A4 033C	-	Reserved
02A4 0340	DFOPT1	Destination FIFO Options Register 1
02A4 0344	DFSRC1	Destination FIFO Source Address Register 1
02A4 0348	DFCNT1	Destination FIFO Count Register 1
02A4 034C	DFDST1	Destination FIFO Destination Address Register 1
02A4 0350	DFBIDX1	Destination FIFO BIDX Register 1
02A4 0354	DFMPPRXY1	Destination FIFO Memory Protection Proxy Register 1
02A4 0358 - 02A4 037C	-	Reserved
02A4 0380	DFOPT2	Destination FIFO Options Register 2
02A4 0384	DFSRC2	Destination FIFO Source Address Register 2
02A4 0388	DFCNT2	Destination FIFO Count Register 2
02A4 038C	DFDST2	Destination FIFO Destination Address Register 2
02A4 0390	DFBIDX2	Destination FIFO BIDX Register 2
02A4 0394	DFMPPRXY2	Destination FIFO Memory Protection Proxy Register 2
02A4 0398 - 02A4 03BC	-	Reserved
02A4 03C0	DFOPT3	Destination FIFO Options Register 3
02A4 03C4	DFSRC3	Destination FIFO Source Address Register 3
02A4 03C8	DFCNT3	Destination FIFO Count Register 3
02A4 03CC	DFDST3	Destination FIFO Destination Address Register 3
02A4 03D0	DFBIDX3	Destination FIFO BIDX Register 3
02A4 03D4	DFMPPRXY3	Destination FIFO Memory Protection Proxy Register 3
02A4 03D8 - 02A4 FFFC	-	Reserved

Table 7-12. EDMA3 Transfer Controller 5 Registers

HEX ADDRESS RANGE	ACRONYM	REGISTER NAME
02A4 8000	PID	Peripheral Identification Register
02A4 8004	TCCFG	EDMA3TC Configuration Register
02A4 8008 - 02A4 80FC	-	Reserved
02A4 8100	TCSTAT	EDMA3TC Channel Status Register
02A4 8104 - 02A4 811C	-	Reserved
02A4 8120	ERRSTAT	Error Register
02A4 8124	ERREN	Error Enable Register
02A4 8128	ERRCLR	Error Clear Register
02A4 812C	ERRDET	Error Details Register
02A4 8130	ERRCMD	Error Interrupt Command Register
02A4 8134 - 02A4 813C	-	Reserved
02A4 8140	RDRATE	Read Rate Register
02A4 8144 - 02A4 823C	-	Reserved
02A4 8240	SAOPT	Source Active Options Register

Copyright © 2008–2011, Texas Instruments Incorporated

Table 7-12. EDMA3 Transfer Controller 5 Registers (continued)

HEX ADDRESS RANGE	ACRONYM	REGISTER NAME
02A4 8244	SASRC	Source Active Source Address Register
02A4 8248	SACNT	Source Active Count Register
02A4 824C	SADST	Source Active Destination Address Register
02A4 8250	SABIDX	Source Active Source B-Index Register
02A4 8254	SAMPPRXY	Source Active Memory Protection Proxy Register
02A4 8258	SACNTRLD	Source Active Count Reload Register
02A4 825C	SASRCBREF	Source Active Source Address B-Reference Register
02A4 8260	SADSTBREF	Source Active Destination Address B-Reference Register
02A4 8264 - 02A4 827C	-	Reserved
02A4 8280	DFCNTRLD	Destination FIFO Set Count Reload
02A4 8284	DFSRCBREF	Destination FIFO Set Destination Address B Reference Register
02A4 8288	DFDSTBREF	Destination FIFO Set Destination Address B Reference Register
02A4 828C - 02A4 82FC	-	Reserved
02A4 8300	DFOPT0	Destination FIFO Options Register 0
02A4 8304	DFSRC0	Destination FIFO Source Address Register 0
02A4 8308	DFCNT0	Destination FIFO Count Register 0
02A4 830C	DFDST0	Destination FIFO Destination Address Register 0
02A4 8310	DFBIDX0	Destination FIFO BIDX Register 0
02A4 8314	DFMPPRXY0	Destination FIFO Memory Protection Proxy Register 0
02A4 8318 - 02A4 833C	-	Reserved
02A4 8340	DFOPT1	Destination FIFO Options Register 1
02A4 8344	DFSRC1	Destination FIFO Source Address Register 1
02A4 8348	DFCNT1	Destination FIFO Count Register 1
02A4 834C	DFDST1	Destination FIFO Destination Address Register 1
02A4 8350	DFBIDX1	Destination FIFO BIDX Register 1
02A4 8354	DFMPPRXY1	Destination FIFO Memory Protection Proxy Register 1
02A4 8358 - 02A4 837C	-	Reserved
02A4 8380	DFOPT2	Destination FIFO Options Register 2
02A4 8384	DFSRC2	Destination FIFO Source Address Register 2
02A4 8388	DFCNT2	Destination FIFO Count Register 2
02A4 838C	DFDST2	Destination FIFO Destination Address Register 2
02A4 8390	DFBIDX2	Destination FIFO BIDX Register 2
02A4 8394	DFMPPRXY2	Destination FIFO Memory Protection Proxy Register 2
02A4 8398 - 02A4 83BC	-	Reserved
02A4 83C0	DFOPT3	Destination FIFO Options Register 3
02A4 83C4	DFSRC3	Destination FIFO Source Address Register 3
02A4 83C8	DFCNT3	Destination FIFO Count Register 3
02A4 83CC	DFDST3	Destination FIFO Destination Address Register 3
02A4 83D0	DFBIDX3	Destination FIFO BIDX Register 3
02A4 83D4	DFMPPRXY3	Destination FIFO Memory Protection Proxy Register 3
02A4 83D8 - 02A4 FFFC	-	Reserved

Copyright © 2008–2011, Texas Instruments Incorporated

7.6 Interrupts

7.6.1 Interrupt Sources and Interrupt Controller

The CPU interrupts on the device are configured through the C64x+ Megamodule Interrupt Controller. The interrupt controller allows for up to 128 system events to be programmed to any of the twelve CPU interrupt inputs, the CPU exception input, or the advanced emulation logic. Table 7-13 shows the mapping of system events to the interrupt controller inputs. Event numbers 0-31 correspond to the default interrupt mapping of the device. The remaining events must be mapped using software. Table 7-14 lists the Chip Interrupt Controller (CIC) registers. For more details on chip interrupt controller 0-2 (CIC0, CIC1, and CIC2), see Section 7.6.2.

Table 7-13. Interrupts

EVENT CHANNEL	EVENT	EVENT DESCRIPTION
0	EVT0	Output of Event Combiner 0 for Events [31:4]
1	EVT1	Output of Event Combiner 1 for Events [63:32]
2	EVT2	Output of Event Combiner 2 for Events [95:64]
3	EVT3	Output of Event Combiner 3 for Events [127:96]
4	SEMINT*n* (1)	Semaphore Grant Interrupt
5	MACINT*n* (2)	Ethernet MAC Control Interrupt
6	MACRXINT*n* (2)	Ethernet MAC Receive Interrupt
7	MACTXINT*n* (2)	Ethernet MAC Transmit Interrupt
8	MACTHRESH*n* (2)	Ethernet MAC Receive Threshold Interrupt
9	EMU_DTDMA*n* (3)	ECM Interrupt for: 1. Host Scan Access 2. DTDMA Transfer Complete 3. AET Interrupt
10	Unused	Reserved
11	EMU_RTDXRX	RTDX Receive Complete
12	EMU_RTDXTX	RTDX Transmit Complete
13	IDMAINT0	IDMA Channel 0 Interrupt
14	IDMAINT1	IDMA Channel 1 Interrupt
15	FSEVT0	Frame Synchronization Event 0
16	FSEVT1	Frame Synchronization Event 1
17	FSEVT2	Frame Synchronization Event 2
18	FSEVT3	Frame Synchronization Event 3
19	FSEVT4	Frame Synchronization Event 4
20	FSEVT5	Frame Synchronization Event 5
21	FSEVT6	Frame Synchronization Event 6
22	FSEVT7	Frame Synchronization Event 7
23	FSEVT8	Frame Synchronization Event 8
24	FSEVT9	Frame Synchronization Event 9
25	FSEVT10	Frame Synchronization Event 10
26	FSEVT11	Frame Synchronization Event 11
27	FSEVT12	Frame Synchronization Event 12
28	FSEVT13	Frame Synchronization Event 13

(1) C64x+ Megamodule Core 0, C64x+ Megamodule Core 1, and C64x+ Megamodule Core 2 receive SEMINT0, SEMINT1, and SEMINT2, respectively.
(2) EMAC interrupts, MACINT*n*, MACRXINT*n*, MACTXINT*n*, and MACTHRESH*n* are received by the C64x+ Megamodules, as follows:
- C64x+ Megamodule Core 0 receives MACINT[0], MACRXINT[0], MACTXINT[0], and MACTHRESH[0]
- C64x+ Megamodule Core 1 receives MACINT[1], MACRXINT[1], MACTXINT[1], and MACTHRESH[1]
- C64x+ Megamodule Core 2 receives MACINT[2], MACRXINT[2], MACTXINT[2], and MACTHRESH[2]

(3) C64x+ Megamodule Core 0, C64x+ Megamodule Core 1, and C64x+ Megamodule Core 2 receive EMU_DTDMA0, EMU_DTDMA1, and EMU_DTDMA2, respectively.

Copyright © 2008–2011, Texas Instruments Incorporated

Table 7-13. Interrupts (continued)

EVENT CHANNEL	EVENT	EVENT DESCRIPTION
29	FSEVT14	Frame Synchronization Event 14
30	FSEVT15	Frame Synchronization Event 15
31	FSEVT16	Frame Synchronization Event 16
32	FSEVT17	Frame Synchronization Event 17
33	TINT0L	Timer 0 Interrupt Low
34	TINT0H	Timer 0 Interrupt High
35	TINT1L	Timer 1 Interrupt Low
36	TINT1H	Timer 1 Interrupt High
37	TINT2L	Timer 2 Interrupt Low
38	TINT2H	Timer 2 Interrupt High
39	TINT3L	Timer 3 Interrupt Low
40	TINT3H	Timer 3 Interrupt High
41	TINT4L	Timer 4 Interrupt Low
42	TINT4H	Timer 4 Interrupt High
43	TINT5L	Timer 5 Interrupt Low
44	TINT5H	Timer 5 Interrupt High
45	GPINT0	GPIO Interrupt 0
46	GPINT1	GPIO Interrupt 1
47	GPINT2	GPIO Interrupt 2
48	GPINT3	GPIO Interrupt 3
49	GPINT4	GPIO Interrupt 4
50	GPINT5	GPIO Interrupt 5
51	GPINT6	GPIO Interrupt 6
52	GPINT7	GPIO Interrupt 7
53	GPINT8	GPIO Interrupt 8
53	GPINT9	GPIO Interrupt 9
55	GPINT10	GPIO Interrupt 10
56	GPINT11	GPIO Interrupt 11
57	GPINT12	GPIO Interrupt 12
58	GPINT13	GPIO Interrupt 13
59	GPINT14	GPIO Interrupt 14
60	GPINT15	GPIO Interrupt 15
61	TPCC_GINT	EDMA Channel Global Completion Interrupt
62	TPCC_INT0	TPCC Completion Interrupt - Mask 0
63	TPCC_INT1	TPCC Completion Interrupt - Mask 1
64	TPCC_INT2	TPCC Completion Interrupt - Mask 2
65	TPCC_INT3	TPCC Completion Interrupt - Mask 3
66	TPCC_INT4	TPCC Completion Interrupt - Mask 4
67	TPCC_INT5	TPCC Completion Interrupt - Mask 5
68	TPCC_INT6	TPCC Completion Interrupt - Mask 6
69	TPCC_INT7	TPCC Completion Interrupt - Mask 7
70	Unused	Reserved
71	RIOINT (2*n*)(4)	RapidIO Interrupt (2*n*)

(4) RIOINT interrupts are received by the C64x+ Megamodules, as follows:
- C64x+ Megamodule Core 0 receives RIOINT[1:0]
- C64x+ Megamodule Core 1 receives RIOINT[3:2]
- C64x+ Megamodule Core 2 receives RIOINT[5:4]

Copyright © 2008–2011, Texas Instruments Incorporated

Table 7-13. Interrupts (continued)

EVENT CHANNEL	EVENT	EVENT DESCRIPTION
72	RIOINT (2*n*+1) (5)	RapidIO Interrupt (2*n*+1)
73	AIF_EVT0	Error/Alarm Event 0
74	AIF_EVT1	Error/Alarm Event 1
75	Unused	Reserved
76	IPC_LOCAL	Inter DSP Interrupt from IPCGRn
77	Unused	Reserved
78	Unused	Reserved
79	Unused	Reserved
80	CIC*n*_EVT0	System Event 0 (Combined) from Chip Interrupt Controller[*n*] (6)
81	CIC*n*_EVT1	System Event 1 (Combined) from Chip Interrupt Controller[*n*]
82	CIC*n*_EVT2	System Event 2 from Chip Interrupt Controller[*n*]
83	CIC*n*_EVT3	System Event 3 from Chip Interrupt Controller[*n*]
84	CIC*n*_EVT4	System Event 4 from Chip Interrupt Controller[*n*]
85	CIC*n*_EVT5	System Event 5 from Chip Interrupt Controller[*n*]
86	CIC*n*_EVT6	System Event 6 from Chip Interrupt Controller[*n*]
87	CIC*n*_EVT7	System Event 7 from Chip Interrupt Controller[*n*]
88	CIC*n*_EVT8	System Event 8 from Chip Interrupt Controller[*n*]
89	CIC*n*_EVT9	System Event 9 from Chip Interrupt Controller[*n*]
90	CIC*n*_EVT10	System Event 10 from Chip Interrupt Controller[*n*]
91	CIC*n*_EVT11	System Event 11 from Chip Interrupt Controller[*n*]
92	CIC*n*_EVT12	System Event 12 from Chip Interrupt Controller[*n*]
93	CIC*n*_EVT13	System Event 13 from Chip Interrupt Controller[*n*]
94	Unused	Reserved
95	Unused	Reserved
96	INTERR	Dropped CPU Interrupt Event
97	EMC_IDMAERR	Invalid IDMA Parameters
98	Unused	Reserved
99	Unused	Reserved
100	EFINTA	EFI Interrupt from Side A
101	EFIINTB	EFI Interrupt from Side B
102-112	Unused	Reserved
113	PMC_ED	Single Bit Error Detected during DMA Read
114-115	Unused	Reserved
116	UMC_ED1	Corrected Bit Error Detected
117	UMC_ED2	Uncorrected Bit Error Detected
118	PDC_INT	PDC Sleep Interrupt
119	SYS_CMPA	CPU Memory Protection Fault
120	PMC_CMPA	CPU Memory Protection Fault
121	PMC_DMPA	DMA Memory Protection Fault
122	DMC_CMPA	CPU Memory Protection Fault
123	DMC_DMPA	DMA Memory Protection Fault
124	UMC_CMPA	CPU Memory Protection Fault
125	UMC_DMPA	DMA Memory Protection Fault

(5) RIOINT interrupts are received by the C64x+ Megamodules, as follows:
- C64x+ Megamodule Core 0 receives RIOINT[1:0]
- C64x+ Megamodule Core 1 receives RIOINT[3:2]
- C64x+ Megamodule Core 2 receives RIOINT[5:4]

(6) For more information on CIC*n* events, see the *TMS320C6474 DSP Chip Interrupt Controller (CIC) User's Guide* (literature number SPRUFK6).

Copyright © 2008–2011, Texas Instruments Incorporated

Table 7-13. Interrupts (continued)

EVENT CHANNEL	EVENT	EVENT DESCRIPTION
126	EMC_CMPA	CPU Memory Protection Fault
127	EMC_BUSERR	Bus Error Interrupt

Table 7-14. Chip Interrupt Controller Registers

HEX ADDRESS	ACRONYM	REGISTER NAME
0288 0000	CIC0	Chip Interrupt Controller 0 Registers
0288 0100	CIC1	Chip Interrupt Controller 1 Registers
0288 0200	CIC2	Chip Interrupt Controller 2 Registers
0288 0300	CIC3	Chip Interrupt Controller 3 Registers

7.6.2 System Event Routing

Additional system events are routed to each of the C64x+ Megamodules to provide chip-level events that are not required as CPU interrupts/exceptions to be routed to the interrupt controller as emulation events. Additionally, error-class events or infrequently used events are also routed through the system event router to offload the C64x+ Megamodule interrupt selector. This is accomplished through Chip Interrupt Controllers, CIC[2:0], with one controller per C64x+ Megamodule. This is clocked using CPU/6.

The event controllers consist of simple combination logic to provide sixteen events to each C64x+ Megamodule, plus the TPCC.

These events are routed to the C64x+ Megamodules for AET purposes, from those TPCC and FSYNC events that are not otherwise provided to each C64x+ Megamodule. The event controllers each include two event combiners to provide two combined events to each C64x+ Megamodule, for use. Each of the 16 event outputs from the controllers can select any of the 64 inputs, or either of the two combined events to pass on to their respective C64x+ Megamodule.

Table 7-15 lists the system events that are available to each C64x+ Megamodule through their respective event controllers. Note that *n* implies the event number matches the C64x+ Megamodule number to which it is routed.

Table 7-15. C64x+ Megamodule Chip Interrupt Controller Event List CIC[2:0]

EVENT CHANNEL	EVENT	EVENT DESCRIPTION
0	EVT0	Output of Event Controller 0 for Events [31:2]
1	EVT1	Output of Event Controller 1 for Events [63:32]
2-3	Unused	Reserved
4	I2CINT	Error Interrupt
5	FSERR1	Error/Alarm Interrupt 1
6	RIOINT7	RapidIO Interrupt 7
7	FSERR2	Error/Alarm Interrupt 2
8	VCPINT	Error Interrupt
9	TCPINT	Error Interrupt
10	RINT0	McBSP0 Receive Interrupt
11	XINT0	McBSP0 Transmit Interrupt
12	RINT1	McBSP1 Receive Interrupt
13	XINT1	McBSP1 Transmit Interrupt
14	REVT0	McBSP0 Receive EDMA Event
15	XEVT0	McBSP0 Transmit EDMA Event
16	REVT1	McBSP1 Receive EDMA Event
17	XEVT1	McBSP1 Transmit EDMA Event

Copyright © 2008–2011, Texas Instruments Incorporated

Table 7-15. C64x+ Megamodule Chip Interrupt Controller Event List CIC[2:0] (continued)

EVENT CHANNEL	EVENT	EVENT DESCRIPTION
18	IREVT	I2C Receive EDMA Event
19	IXEVT	I2C Transmit EDMA Event
20	FSEVT18	FSYNC Event 18
21	FSEVT19	FSYNC Event 19
22	FSEVT20	FSYNC Event 20
23	FSEVT21	FSYNC Event 21
24	FSEVT22	FSYNC Event 22
25	FSEVT23	FSYNC Event 23
26	FSEVT24	FSYNC Event 24
27	FSEVT25	FSYNC Event 25
28	FSEVT26	FSYNC Event 26
29	FSEVT27	FSYNC Event 27
30	FSEVT28	FSYNC Event 28
31	FSEVT29	FSYNC Event 28
32	VCPREVT	VCP Receive Event
33	VCPXEVT	VCP Transmit Event
34	TCPREVT	TCP Receive Event
35	TCPXEVT	TCP Transmit Event
36	TPCC_ERRINT	TPCC Error Interrupt
37	TPCC_MPINT	TPCC Memory Protection Interrupt
38	TPTC_ERRINT0	TPTC0 Error Interrupt
39	TPTC_ERRINT1	TPTC1 Error Interrupt
40	TPTC_ERRINT2	TPTC2 Error Interrupt
41	TPTC_ERRINT3	TPTC3 Error Interrupt
42	TPTC_ERRINT4	TPTC4 Error Interrupt
43	TPTC_ERRINT5	TPTC5 Error Interrupt
44	TPCC_AETEVT	TPCC AET Event
45	AIF_EVT2	AIF CPU Interrupt 2
46	AIF_EVT3	AIF CPU Interrupt 2
47	AIF_PSEVT0	Packet Switched Transfer Event 0
48	AIF_PSEVT1	Packet Switched Transfer Event 1
49	AIF_PSEVT2	Packet Switched Transfer Event 2
50	AIF_PSEVT3	Packet Switched Transfer Event 3
51	AIF_PSEVT4	Packet Switched Transfer Event 4
52	AIF_PSEVT5	Packet Switched Transfer Event 5
53	AIF_PSEVT6	Packet Switched Transfer Event 6
54	AIF_BUFEVT	AIF Capture Buffer Event.
55-57	Unused	Reserved
58	SEMERR*n* (1)	Semaphore Error Event for C64x+ Megamodule*n*
59-63	Unused	Reserved

(1) C64x+ Megamodule Core 0, C64x+ Megamodule Core 1, and C64x+ Megamodule Core 2 receive SEMERR0, SEMERR1, and SEMERR2, respectively.

Another system event selector is present to route events to the TPCC. Most system events routed through the event controller to the TPCC are CPU events that do not normally require DMA servicing, but may be used to trigger a statistics capture. Several events are routed through the event controller that may be used to trigger a DMA transaction in normal operation, but the programmer must make a resource tradeoff to use these events. Table 7-16 lists all of the events routed through the TPCCs system event controller.

Copyright © 2008–2011, Texas Instruments Incorporated

Table 7-16. TPCC Interrupt Controller Event List (CIC3)

EVENT CHANNEL	EVENT	EVENT DESCRIPTION
0	EVT0	Output of Event Controller 0 for Events [31:2]
1	EVT1	Output of Event Controller 1 for Events [63:32]
2	FSEVT0	Frame Synchronization Event 0
3	FSEVT1	Frame Synchronization Event 1
4	FSEVT2	Frame Synchronization Event 2
5	FSEVT3	Frame Synchronization Event 3
6	FSEVT14	Frame Synchronization Event 14
7	FSEVT15	Frame Synchronization Event 15
8	FSEVT16	Frame Synchronization Event 16
9	FSEVT17	Frame Synchronization Event 17
10	FSEVT18	Frame Synchronization Event 18
11	FSEVT19	Frame Synchronization Event 19
12	FSEVT20	Frame Synchronization Event 20
13	FSEVT21	Frame Synchronization Event 21
14	FSEVT22	Frame Synchronization Event 22
15	FSEVT23	Frame Synchronization Event 23
16	FSEVT24	Frame Synchronization Event 24
17	FSEVT25	Frame Synchronization Event 25
18	FSEVT26	Frame Synchronization Event 26
19	FSEVT27	Frame Synchronization Event 27
20	FSEVT28	Frame Synchronization Event 28
21	RIOINT0	RapidIO Interrupt 0
22	RIOINT1	RapidIO Interrupt 1
23	RIOINT2	RapidIO Interrupt 2
24	RIOINT3	RapidIO Interrupt 3
25	RIOINT4	RapidIO Interrupt 4
26	RIOINT5	RapidIO Interrupt 5
27	RIOINT7	RapidIO Interrupt 7
28	MACINT[0]	Ethernet EMAC Interrupt
29	MACRXINT[0]	Ethernet EMAC Interrupt
30	MACTXINT[0]	Ethernet EMAC Interrupt
31	MACINT[1]	Ethernet EMAC Interrupt
32	MACRXINT[1]	Ethernet EMAC Interrupt
33	MACTXINT[1]	Ethernet EMAC Interrupt
34	MACINT[2]	Ethernet EMAC Interrupt
35	MACRXINT[2]	Ethernet EMAC Interrupt
36	MACTXINT[2]	Ethernet EMAC Interrupt
37	SEMERR0	Semaphore Error Interrupt
38	SEMERR1	Semaphore Error Interrupt
39	SEMERR2	Semaphore Error Interrupt
40-42	Unused	Reserved
43	TINT3L	Timer Interrupt Low
44	TINT3H	Timer Interrupt High
45	TINT4L	Timer Interrupt Low
46	TINT4H	Timer Interrupt High
47	TINT5L	Timer Interrupt Low
48	TINT5H	Timer Interrupt High

Copyright © 2008–2011, Texas Instruments Incorporated

Table 7-16. TPCC Interrupt Controller Event List (CIC3) (continued)

EVENT CHANNEL	EVENT	EVENT DESCRIPTION
49	AIF_BUFEVT	AIF Capture Buffer Event
50	FSEVT29	Frame Synchronization Event 29
51-52	Unused	Reserved
53	GPINT0	GPIO Event
54	GPINT1	GPIO Event
55	GPINT2	GPIO Event
56	GPINT3	GPIO Event
57	GPINT4	GPIO Event
58	CIC0_EVT14	CIC_EVT_o[14] from Chip Interrupt Controller[0]
59	CIC0_EVT15	CIC_EVT_o[15] from Chip Interrupt Controller[0]
60	CIC1_EVT14	CIC_EVT_o[14] from Chip Interrupt Controller[1]
61	CIC1_EVT15	CIC_EVT_o[15] from Chip Interrupt Controller[1]
62	CIC2_EVT14	CIC_EVT_o[14] from Chip Interrupt Controller[2]
63	CIC2_EVT15	CIC_EVT_o[15] from Chip Interrupt Controller[2]

Copyright © 2008–2011, Texas Instruments Incorporated

7.6.3 External Interrupts Electrical Data/Timing

Table 7-17. Timing Requirements for External Interrupts(1)

(see Figure 7-5)

NO.	PARAMETERS		MIN	MAX	UNIT
1	$t_{w(NMIL)}$	Width of the NMI interrupt pulse low	6P		ns
2	$t_{w(NMIH)}$	Width of the NMI interrupt pulse high	6P		ns

(1) P = 1/CPU clock frequency, in ns. For example, when running parts at 1000 MHz, use P = 1 ns.

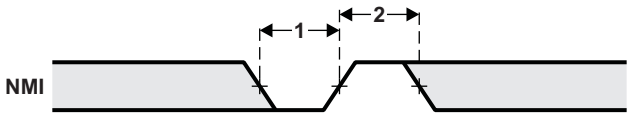

Figure 7-5. NMI Interrupt Timing

7.7 Reset Controller

The reset controller detects the different type of resets supported on the device and manages the distribution of those resets throughout the device.

The C6474 device has several types of resets: power-on reset, warm reset, system reset, and CPU reset. Table 7-18 explains further the types of reset, the reset initiator, and the effects of each reset on the chip.

Table 7-18. Reset Types

TYPE	INITIATOR	EFFECT(S)
Power-on Reset	$\overline{\text{POR}}$ pin	Resets the entire chip including the test and emulation logic.
Warm Reset	$\overline{\text{XWRST}}$ pin	Resets everything except for the test and emulation logic PLL2, AIF, and FSYNC. Emulation stays alive during warm reset.
System Reset	Emulator Serial RapidIO	A system reset maintains memory contents and does not reset the test and emulation circuitry. The device configuration pins are also not re-latched and the state of the peripherals (enabled/disabled) are also not affected.
CPU Local Reset	Watchdog Timer	CPU local reset.

7.7.1 Power-on Reset ($\overline{\text{POR}}$ Pin)

Power-on Reset is a special reset needed when powering on the DSP. The device is globally reset through the assertion of the active-low Power-on Reset ($\overline{\text{POR}}$) input. The power-on reset is intended to be asserted to the device while the system power supplies are ramped.

For power-on reset, the main PLL Controller comes up in bypass and the PLL is not enabled. Other resets do not affect the state of the PLL or the dividers in the PLL Controller. For the secondary PLL Controller, this is different as the PLL is enabled and clocking always when $\overline{\text{POR}}$ is not asserted.

The following sequence must be followed during a power-on reset.

1. Wait for all power supplies to reach normal operating conditions while keeping the $\overline{\text{POR}}$ pin asserted (driven low). While $\overline{\text{POR}}$ is asserted, all pins except $\overline{\text{RESETSTAT}}$ will be set to high-impedance. After the $\overline{\text{POR}}$ pin is de-asserted (driven high), all Z group pins, low group pins, and high group pins are set to their reset state and will remain at their reset state until otherwise configured by their respective peripheral. All peripherals that are power managed, are disabled after a Power-on Reset and must be enabled through the Device State Control registers (for more details, see Section 3.2, *Peripheral Selection After Device Reset*.
2. Clocks are reset, and they are propagated throughout the chip to reset any logic that was using reset synchronously. All logic is now reset and $\overline{\text{RESETSTAT}}$ will be driven low indicating that the device is in reset.
3. $\overline{\text{POR}}$ must be held active until all supplies on the board are stable then for at least an additional 100 µs.
4. The $\overline{\text{POR}}$ pin can now be de-asserted. Reset sampled pin values are latched at this point. PLL2 is taken out of reset and begins its locking sequence, and all power-on device initialization also begins.
5. After device initialization is complete, the $\overline{\text{RESETSTAT}}$ pin is de-asserted (driven high). By this time, PLL2 has already completed its locking sequence and is outputting a valid clock. The system clocks of both PLL controllers are allowed to finish their current cycles and then paused for 10 cycles of their respective system reference clocks. After the pause, the system clocks are restarted at their default divide by settings.
6. The device is now out of reset and device execution begins as dictated by the selected boot mode.

Copyright © 2008–2011, Texas Instruments Incorporated

7.7.2 Warm Reset

A warm reset will reset everything on the chip except the AIF, FSYNC, PLLs, PLL Controllers, test, and emulation logic. $\overline{\text{POR}}$ should also remain de-asserted during this time.

1. $\overline{\text{XWRST}}$ pin is pulled active low for a minimum of 24 CLKIN1 cycles. The reset signals flow to the modules reset by warm reset and sends a tri-state signal to most the I/O pads, to prevent off chip contention.
2. Once all logic is reset, $\overline{\text{RESETSTAT}}$ is driven active to denote that the device is in reset.
3. $\overline{\text{XWRST}}$ pin can now be released. A minimal device initialization begins to occur. Note that configuration pins are not re-latched and clocking is unaffected within the device.
4. After device initialization is complete, the $\overline{\text{RESETSTAT}}$ pin is de-asserted (driven high).

During warm reset, the DDR2 SDRAM memory content can be retained if the user places the DDR2 SDRAM in self-refresh mode before invoking the warm reset; however, warm reset will reset the DDR2 EMIF registers. The software needs to re-program all DDR2 EMIF registers to correct values after warm reset.

7.7.3 System Reset

System reset is initiated by the emulator or by the RapidIO module. It is triggered by clicking on the **Debug → Advanced Resets → System Reset** menu in Code Composer Studio using the emulator. System reset is also triggered by RIOINT[6], which is connected to the reset controller. It is considered a soft reset, meaning memory contents are maintained, it does not affect the clock logic, or the power control logic of the peripherals.

1. The $\overline{\text{RESETSTAT}}$ pin goes low to indicate an internal reset is being generated. The reset is allowed to propagate through the system. Internal system clocks are not affected. PLLs also remain locked.
2. The boot sequence is started after the system clocks are restarted. Since the configuration pins (including the BOOTMODE[3:0] pins) are not latched with a System Reset, the previous values, as shown in the DEVSTAT register, are used to select the boot mode.

7.7.4 CPU Reset

(Timer 64 3, 4, and 5) can provide a local CPU reset if they are setup in watchdog mode. Timer64 3, 4, and 5 are allowed to reset C64x+ Megamodule Core 0, C64x+ Megamodule Core 1, and C64x+ Megamodule Core 2, respectively.

7.7.5 Reset Priority

If any of the above reset sources occur simultaneously, the PLLCTRL only processes the highest priority reset request. The reset request priorities are as follows (high to low):

- Power-on Reset
- Warm Reset
- System Reset
- CPU Reset

Copyright © 2008–2011, Texas Instruments Incorporated

7.7.6 Reset Controller Register

The reset type status (RSTYPE) register (029A 00E4) is the only register for the reset controller. This register falls in the same memory range as the PLL1 controller registers [029A 0000 - 029A 01FF] (see Table 7-19).

7.7.6.1 Reset Type Status Register Description

The reset type status (RSTYPE) register latches the cause of the last reset. If multiple reset sources occur simultaneously, this register latches the highest priority reset source. The reset type status register is shown in Figure 7-6 and described in Table 7-19.

31	16
Reserved	
R-0	

15	4	3	2	1	0
Reserved		SRST	Rsvd	WRST	$\overline{\text{POR}}$
R-0		R-0	R-0	R-0	R-0

LEGEND: R/W = Read/Write; R = Read only; -*n* = value after reset

Figure 7-6. Reset Type Status Register (RSTYPE) [Hex Address: 029A 00E4]

Table 7-19. Reset Type Status Register (RSTYPE) Field Descriptions

BIT	FIELD	VALUE	DESCRIPTION
31:4	Reserved		Reserved. The reserved bit location is always read as 0. A value written to this field has not effect.
3	SRST		System Reset.
		0	System Reset was not the last reset to occur.
		1	System Reset was the last reset to occur.
1	WRST		Warm Reset.
		0	Warm Reset was not the last reset to occur.
		1	Warm Reset was the last reset to occur.
2	Reserved		Reserved. The reserved bit location is always read as 0. A value written to this field has not effect.
0	$\overline{\text{POR}}$		Power-on Reset.
		0	Power-on Reset was not the last reset to occur.
		1	Power-on Reset was the last reset to occur.

Copyright © 2008–2011, Texas Instruments Incorporated

7.7.7 Reset Electrical Data/Timing

Table 7-20. Timing Requirements for Reset(1) (2)

(see Figure 7-7 and Figure 7-8)

NO.			MIN	MAX	UNIT
1	$t_{h(SUPPLY-POR)}$	Hold Time, $\overline{POR}$ low after supplies stable and input clocks valid	100		µs
2	$t_{su(XWRSTH-PORH)}$	Setup Time, $\overline{XWRST}$x high to $\overline{POR}$ high	100		µs
4	$t_{w(XWRST)}$	Pulse Duration, $\overline{XWRST}$ low	24C		ns
7	$t_{s(BOOT)}$	Setup time, boot mode and configuration pins valid before $\overline{POR}$ or $\overline{XWRST}$ high	12C		ns
8	$t_{h(BOOT)}$	Hold time, bootmode and configuration pins valid after $\overline{POR}$ or $\overline{XWRST}$ high	12C		ns

(1) If CORECLKSEL = 0, C = 1/SYSCLK(N|P) frequency, in ns.
(2) If CORECLKSEL = 1, C = 1/ALTCORECLK(N|P) frequency, in ns.

Table 7-21. Switching Characteristics Over Recommended Operating Conditions During Reset(1)

(see Figure 7-7 and Figure 7-8)

NO.			MIN	MAX	UNIT
3	$t_{d(PORH-RSTATH)}$	Delay Time, $\overline{POR}$ high to $\overline{RESETSTAT}$ high		21000C	ns
5	$t_{d(XWRSTH-RSTATH)}$	Delay Time, $\overline{XWRST}$ high to $\overline{RESETSTAT}$ high		35C	ns

(1) C = 1/CPU frequency, in ns.

Table 7-22. Switching Characteristics Over Recommended Operating Conditions for Warm Reset

(see Figure 7-9)

NO.			MIN	MAX	UNIT
9	$t_{su(PORH-XWRSTL)}$	Setup time, $\overline{POR}$ high to $\overline{XWRST}$ low	1.34		ms

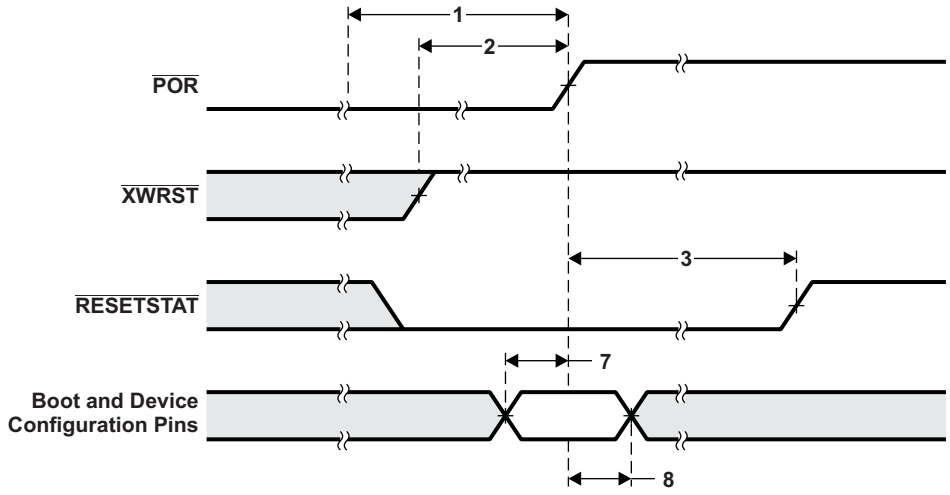

Figure 7-7. Power-On Reset Timing

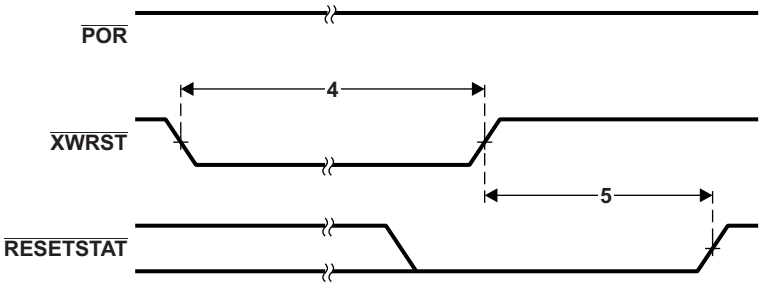

Figure 7-8. Warm Reset Timing

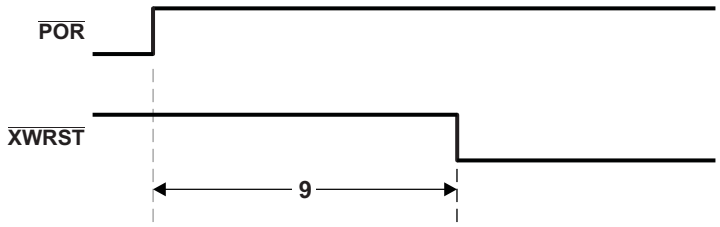

Figure 7-9. Warm Reset Timing

Copyright © 2008–2011, Texas Instruments Incorporated

7.8 PLL1 and PLL1 Controller

This section provides a description of the PLL1 controller registers. For details on the operation of the PLL controller module, see the *TMS320C6474 DSP Software-Programmable Phase-Locked Loop (PLL) Controller User's Guide* (literature number SPRUG09).

Note: The PLL1 controller registers can only be accessed using the CPU or the emulator.

Not all of the registers documented in the *TMS320C6474 DSP Software-Programmable Phase-Locked Loop (PLL) Controller User's Guide* (literature number SPRUG09) are supported on the C6474 device. Only those registers documented in this section are supported. Furthermore, only the bits within the registers described here are supported. You should not write to any reserved memory location or change the value of reserved bits.

The Main and DDR PLLs are controlled by standard PLL Controller peripherals. The PLL Controllers manage the clock ratios, alignment, and gating for the system clocks to the chip. Figure 7-10 includes a block diagram of the PLL Controller, and the two subsequent sections define the clocks and PLL Controller parameters for each of the two standard PLLs.

The PLL controller logic is responsible for controlling all modes of the PLL through software, in terms multiply factor within the PLL and post-division for each of the chip-level clocks from the PLL output. The PLL controller also controls reset propagation through the chip, clock alignment, and test points. The PLL controller monitors the PLL status and provides an output signal indicating when the PLL is locked.

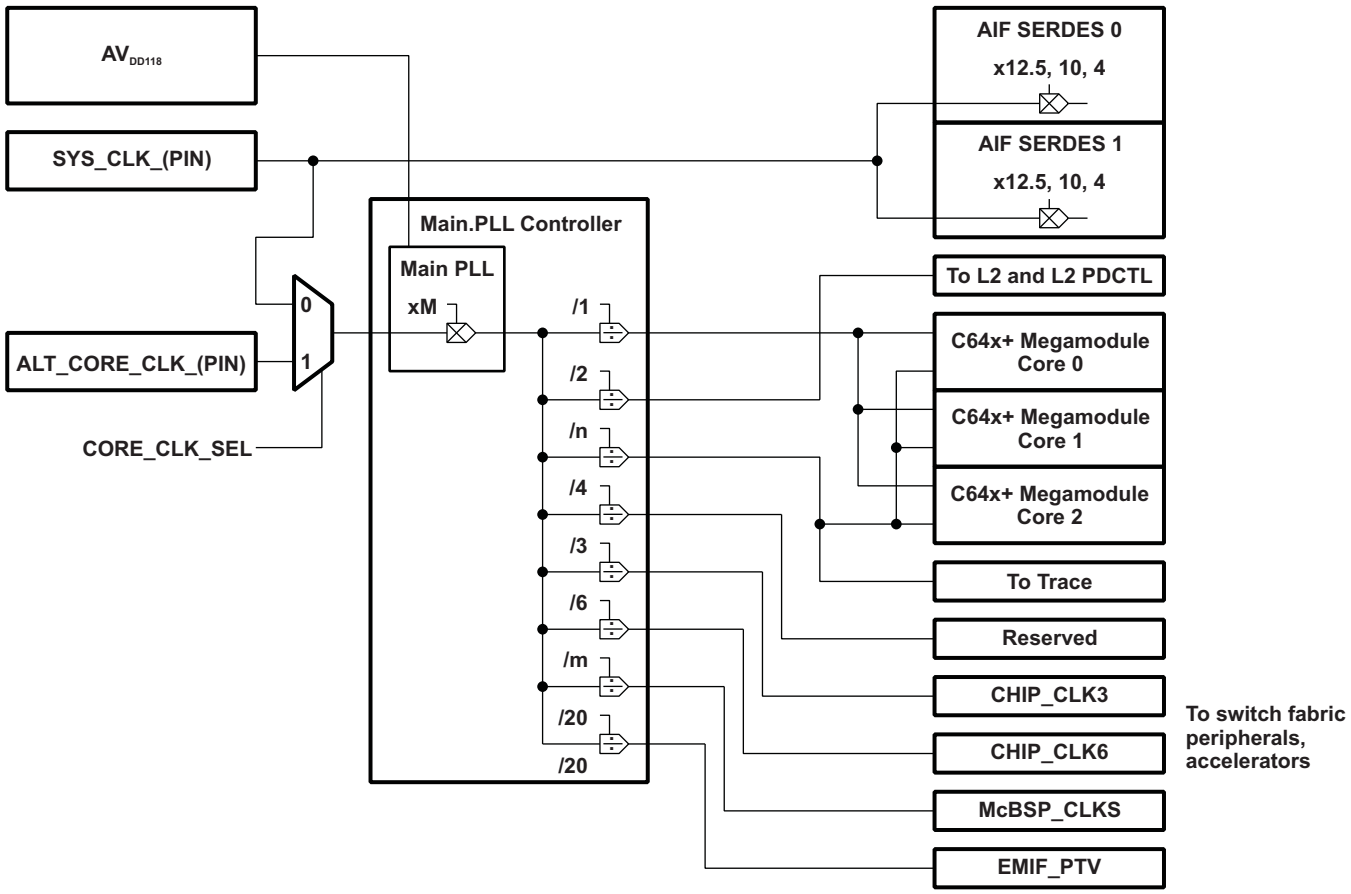

Figure 7-10. PLL Controller Diagram

7.8.1 PLL1 Controller Device-Specific Information

7.8.1.1 Internal Clocks and Maximum Operating Frequencies

The Main PLL, used to drive all of the cores, the switch fabric, and a majority of the peripheral clocks (all but the DDR2 clocks) requires a PLL controller to manage the various clock divisions, gating, and synchronization. The Main PLL controller has seven CPU/6 outputs that are listed below, along with the clock description. Each CPU/6 has a corresponding divide that divides down the output clock of the PLL. Note that dividers are not programmable unless explicitly mentioned in the description below.

- **SYSCLK1 - SYSCLK6**: Reserved.
- **SYSCLK7**: Full-rate clock for all C64x+ Megamodules.
- **SYSCLK8**: Reserved.
- **SYSCLK9**: 1/3-rate clock (chip_clk3) for the switch fabrics, CIC blocks, and fast peripherals (AIF, SRIO, TCP, VCP, EDMA).
- **SYSCLK10**: 1/6-rate clock (chip_clk6) for other peripherals (PLL Controllers, McBSPs, Timer64s, Semaphore, EMAC, GPIO, I2C, PSC) and L3 ROM.
- **SYSCLK11**: 1/n-rate clock (chip_clks) for an optional McBSP CLKS module input to drive the clock generator. Default for this will be 1/10. This is programmable from /8 to /32, where this clock does not violate the max clock of 100 MHz. This clock is also output to the SYSCLKOUT pin.
- **SYSCLK12**: 1/2-rate clock used to clock the L2 and L2 Powerdown Controller.
- **SYSCLK13**: 1/n-rate clock for trace. Default rate for this will be 1/6. This is programmable from /1 to /32, where this clock does not violate the max of 333 MHz. Please note that the data rate on the trace pins are 1/2 of this clock.

7.8.1.2 PLL1 Controller Operating Modes

The PLL1 controller has two modes of operation: bypass mode and PLL mode. The mode of operation is determined by the PLLEN bit of the PLL control register (PLLCTL). In PLL mode, SYSREFCLK is generated from the device input clock CLKIN1 and the PLL multiplier PLLM. In bypass mode, CLKIN1 is fed directly to SYSREFCLK.

All hosts must hold off accesses to the DSP while the frequency of its internal clocks is changing. A mechanism must be in place such that the DSP notifies the host when the PLL configuration has completed.

7.8.1.3 PLL1 Stabilization, Lock, and Reset Times

The PLL stabilization time is the amount of time that must be allotted for the internal PLL regulators to become stable after device powerup. The PLL should not be operated until this stabilization time has expired.

The PLL reset time is the amount of wait time needed when resetting the PLL (writing PLLRST = 1), in order for the PLL to properly reset, before bringing the PLL out of reset (writing PLLRST = 0). For the PLL1 reset time value, see Table 7-23.

The PLL lock time is the amount of time needed from when the PLL is taken out of reset (PLLRST = 1 with PLLEN = 0) to when the PLL controller can be switched to PLL mode (PLLEN = 1). The PLL1 lock time is given in Table 7-24.

Table 7-23. PLL1 Stabilization, Lock, and Reset Times(1)

	MIN	TYPE	MAX	UNIT
PLL1 Stabilization Time	100			µS
PLL Lock Time			2000P	
PLL Reset Time	1000			ns

(1) P = CLKIN1 cycle time in ns.

Copyright © 2008–2011, Texas Instruments Incorporated

7.8.2 PLL1 Controller Memory Map

The memory map of the PLL1 controller is shown in Table 7-24. Note that only registers documented here are accessible on the device. Other addresses in the PLL1 controller memory map should not be modified.

Table 7-24. PLL1 Controller Registers (Including Reset Controller)

HEX ADDRESS	ACRONYM	REGISTER NAME
029A 0000 - 029A 00E3	-	Reserved
029A 00E4	RSTYPE	Reset Type Status Register (Reset Controller)
029A 00E8 - 029A 00FF	-	Reserved
029A 0100	PLLCTL	PLL Control Register
029A 0104	-	Reserved
029A 0108	-	Reserved
029A 010C	-	Reserved
029A 0110	PLLM	PLL Multiplier Control Register
029A 0114	-	Reserved
029A 0118	-	Reserved
029A 011C	-	Reserved
029A 0120	-	Reserved
029A 0124	-	Reserved
029A 0128	-	Reserved
029A 012C	-	Reserved
029A 0130	-	Reserved
029A 0134	-	Reserved
029A 0138	PLLCMD	PLL Controller Command Register
029A 013C	PLLSTAT	PLL Controller Status Register
029A 0140	ALNCTL	PLL Controller Clock Align Control Register
029A 0144	DCHANGE	PLLDIV Ratio Change Status Register
029A 0148	-	Reserved
029A 014C	-	Reserved
029A 0150	SYSTAT	SYSCLK Status Register
029A 0154	-	Reserved
029A 0158	-	Reserved
029A 015C	-	Reserved
029A 0160	-	Reserved
029A 0164	-	Reserved
029A 0168	-	Reserved
029A 016C	-	Reserved
029A 0170	-	Reserved
029A 0174	-	Reserved
029A 0178	-	Reserved
029A 017C	PLLDIV11	PLL Controller Divider 11 Register
029A 0180	-	Reserved
029A 0184	PLLDIV13	PLL Controller Divider 13 Register
029A 0188	-	Reserved
029A 018C	-	Reserved

Copyright © 2008–2011, Texas Instruments Incorporated

7.8.3 PLL1 Controller Register Descriptions

This section provides a description of the PLL1 controller registers. For details on the operation of the PLL controller module, see the *TMS320C6474 DSP Software-Programmable Phase-Locked Loop (PLL) Controller User's Guide* (literature number SPRUG09).

NOTE: The PLL1 controller registers can only be accessed using the CPU or the emulator.

Not all of the registers documented in the *TMS320C6474 DSP Software-Programmable Phase-Locked Loop (PLL) Controller User's Guide* (literature number SPRUG09) are supported on the C6474 device. Only those registers documented in this section are supported. Furthermore, only the bits within the registers described here are supported. You should not write to any reserved memory location or change the value of reserved bits.

7.8.3.1 PLL1 Control Register

The PLL control register (PLLCTL) is shown in Figure 7-11 and described in Table 7-25.

31	16
Reserved	
R-0	

15	8	7	6	5	4	3	2	1	0
Reserved		Rsvd	Rsvd	Reserved		PLLRST	Rsvd	PLL PWRDN	PLLEN
R-0		R/W-0	R-1	R/W-0		R/W-1	R-0	R/W-0	R/W-0

LEGEND: R/W = Read/Write; R = Read only; -*n* = value after reset

Figure 7-11. PLL1 Control Register (PLLCTL) [Hex Address: 029A 0100]

Table 7-25. PLL1 Control Register (PLLCTL) Field Descriptions

Bit	Field	Value	Description
31:8	Reserved		Reserved. The reserved bit location is always read as 0. A value written to this field has no effect.
7	Reserved		Reserved. Writes to this register must keep this bit as 0.
6	Reserved		Reserved. The reserved bit location is always read as 1. A value written to this field has no effect.
5:4	Reserved		Reserved. Writes to this register must keep this bit as 0.
3	PLLRST		PLL reset bit
		0	PLL reset is released
		1	PLL reset is asserted
2	Reserved		Reserved. The reserved bit location is always read as 0. A value written to this field has no effect.
1	PLLPWRDN		PLL power-down mode select bit
		0	PLL is operational
		1	PLL is placed in power-down state, i.e., all analog circuitry in the PLL is turned-off
0	PLLEN		PLL enable bit
		0	Bypass mode. PLL is bypassed. All the system clocks (SYSCLK*n*) are divided down directly from input reference clock.
		1	PLL mode. PLL is not bypassed. PLL output path is enabled. All the system clocks (SYSCLK*n*) are divided down from PLL output.

Copyright © 2008–2011, Texas Instruments Incorporated

7.8.3.2 PLL Multiplier Control Register

The PLL multiplier control register (PLLM) is shown in Figure 7-12 and described in Table 7-26. The PLLM register defines the input reference clock frequency multiplier.

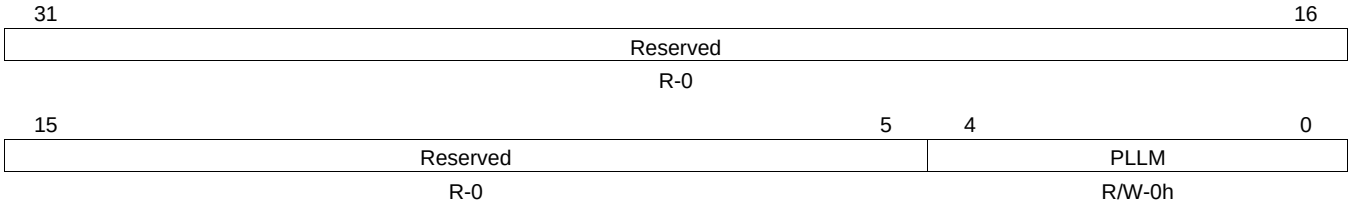

LEGEND: R/W = Read/Write; R = Read only; -*n* = value after reset

Figure 7-12. PLL Multiplier Control Register (PLLM) [Hex Address: 029A 0110]

Table 7-26. PLL Multiplier Control Register (PLLM) Field Descriptions(1)

Bit	Field	Value	Description
31:5	Reserved	0	Reserved. The reserved bit location is always read as 0. A value written to this field has no effect.
4:0	PLLM		PLL multiplier bits. Defines the input reference clock frequency multiplier.
		0h	Bypass
		3h	x4 multiplier rate
		4h	x5 multiplier rate
		.	.
		.	.
		.	.
		1Eh	x31 multiplier rate
		1Fh	x32 multiplier rate

(1) For more information, see Section 7.8.4.

7.8.3.3 PLL Controller Divider 11 Register

The PLL controller divider 11 register (PLLDIV11) is shown in Figure 7-13 and described in Table 7-27.

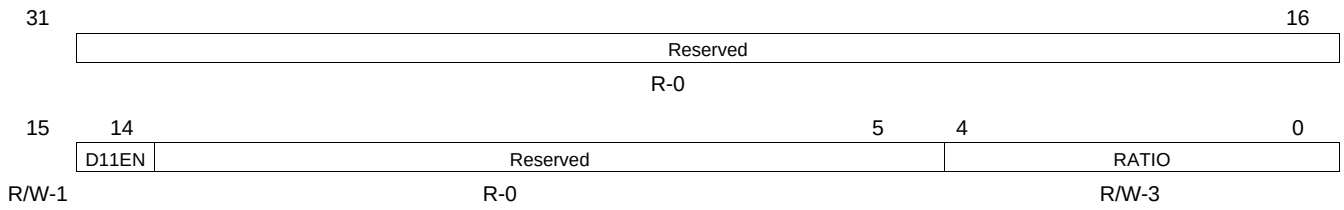

LEGEND: R/W = Read/Write; R = Read only; -*n* = value after reset

Figure 7-13. PLL Controller Divider 11 Register (PLLDIV11) [Hex Address: 029A 017C]

Table 7-27. PLL Controller Divider 11 Register (PLLDIV11) Field Descriptions

Bit	Field	Value	Description
31:16	Reserved	0	Reserved. The reserved bit location is always read as 0. A value written to this field has no effect.
15	D11EN		Divider 11 enable bit.
		0	Divider 11 is disabled. No clock output.
		1	Divider 11 is enabled.
14:5	Reserved	0	Reserved. The reserved bit location is always read as 0. A value written to this field has no effect.
4:0	RATIO(1)	0-1Fh	Divider ratio bits.
		0h-4h	Reserved, do not use.
		7h-31h	÷8 to ÷ 32. Divide frequency by 8 to divide frequency by 32.
		32h-1Fh	Reserved, do not use.

(1) For more details, see SYSCLK11 description in Section 7.8.1.1.

Copyright © 2008–2011, Texas Instruments Incorporated

7.8.3.4 PLL Controller Divider 13 Register

The PLL controller divider 13 register (PLLDIV13) is shown in Figure 7-14 and described in Table 7-28.

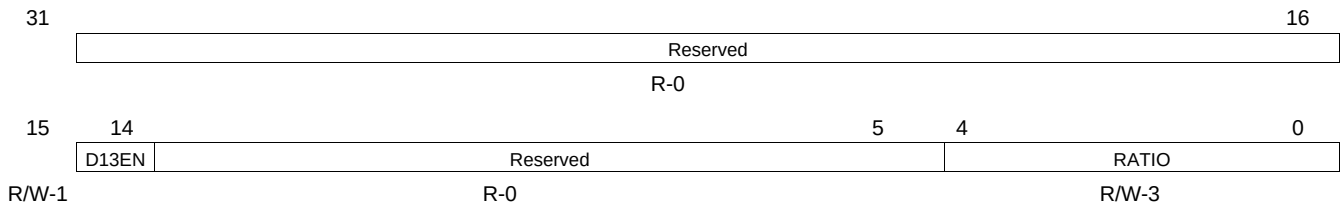

LEGEND: R/W = Read/Write; R = Read only; -*n* = value after reset

Figure 7-14. PLL Controller Divider 13 Register (PLLDIV13) [Hex Address: 029A 0184]

Table 7-28. PLL Controller Divider 13 Register (PLLDIV13) Field Descriptions

Bit	Field	Value	Description
31:16	Reserved	0	Reserved. The reserved bit location is always read as 0. A value written to this field has no effect.
15	D13EN		Divider 13 enable bit.
		0	Divider 13 is disabled. No clock output.
		1	Divider 13 is enabled.
14:5	Reserved	0	Reserved. The reserved bit location is always read as 0. A value written to this field has no effect.
4:0	RATIO	0-1Fh	Divider ratio bits.
		0h-31h	÷1 to ÷32. Divide frequency by 1 to divide frequency by 32.
		32h-1Fh	Reserved, do not use.

Copyright © 2008–2011, Texas Instruments Incorporated

7.8.3.5 PLL Controller Command Register

The PLL controller command register (PLLCMD) contains the command bit for GO operation. PLLCMD is shown in Figure 7-15 and described in Table 7-29.

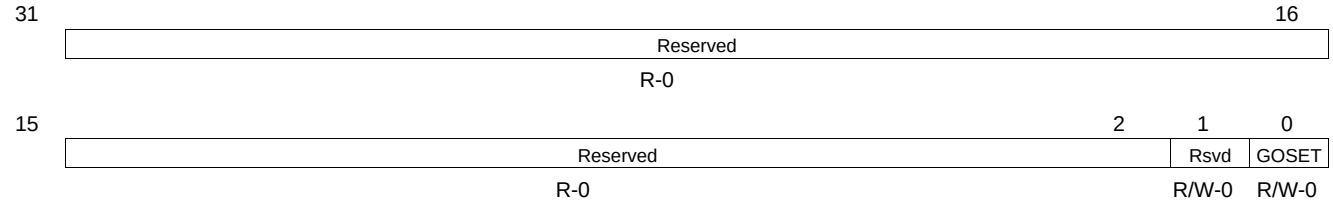

LEGEND: R/W = Read/Write; R = Read only; -*n* = value after reset

Figure 7-15. PLL Controller Command Register (PLLCMD) [Hex Address: 029A 0138]

Table 7-29. PLL Controller Command Register (PLLCMD) Field Descriptions

Bit	Field	Value	Description
31:2	Reserved	0	Reserved. The reserved bit location is always read as 0. A value written to this field has no effect.
1	Reserved		Reserved. The reserved bit location is always read as 0. A value written to this field has no effect.
0	GOSET		GO operation command for SYSCLK rate change and phase alignment. Before setting this bit to 1 to initiate a GO operation, check the GOSTAT bit in the PLLSTAT register to ensure all previous GO operations have completed.
		0	No effect. Write of 0 clears bit to 0.
		1	Initiates GO operation. Write of 1 initiates GO operation. Once set, GOSET remains set but further writes of 1 can initiate the GO operation.

Copyright © 2008–2011, Texas Instruments Incorporated

7.8.3.6 PLL Controller Status Register

The PLL controller status register (PLLSTAT) shows the PLL controller status. PLLSTAT is shown in Figure 7-16 and described in Table 7-30.

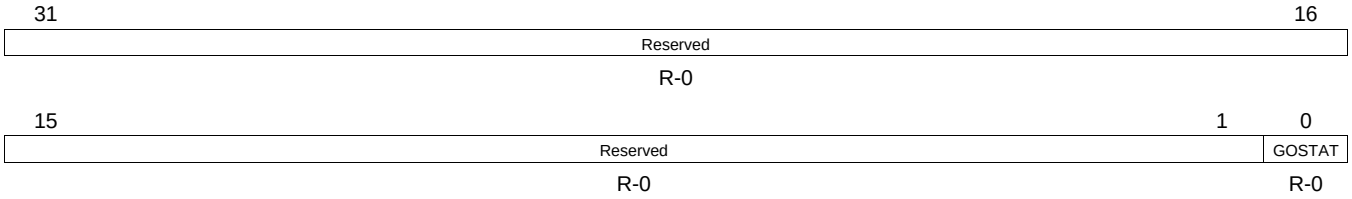

LEGEND: R/W = Read/Write; R = Read only; *-n* = value after reset

Figure 7-16. PLL Controller Status Register (PLLSTAT) [Hex Address: 029A 013C]

Table 7-30. PLL Controller Status Register (PLLSTAT) Field Descriptions

Bit	Field	Value	Description
31:1	Reserved	0	Reserved. The reserved bit location is always read as 0. A value written to this field has no effect.
0	GOSTAT		GO operation status.
		0	GO operation is not in progress. SYSCLK divide ratios are not being changed.
		1	GO operation is in progress. SYSCLK divide ratios are being changed.

7.8.3.7 PLL Controller Clock Align Control Register

The PLL controller clock align control register (ALNCTL) is shown in Figure 7-17 and described in Table 7-31.

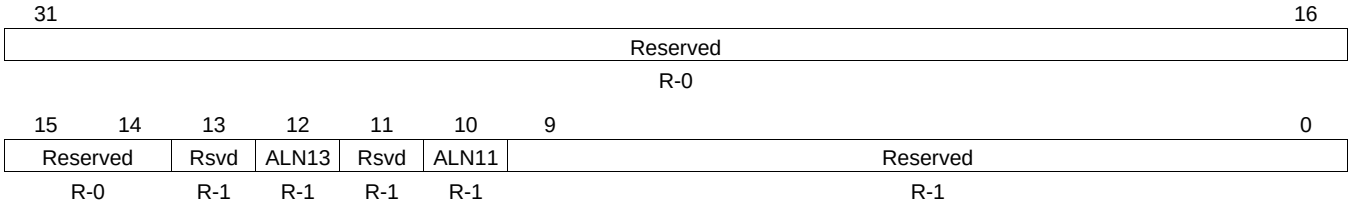

LEGEND: R/W = Read/Write; R = Read only; -*n* = value after reset

Figure 7-17. PLL Controller Clock Align Control Register (ALNCTL) [Hex Address: 029A 0140]

Table 7-31. PLL Controller Clock Align Control Register (ALNCTL) Field Descriptions

Bit	Field	Value	Description
31:14	Reserved	0	Reserved. The reserved bit location is always read as 0. A value written to this field has no effect.
13	Reserved	1	Reserved. The reserved bit location is always read as 1. A value written to this field has no effect.
12	ALN13		SYSCLK13 alignment. Do not change the default values of these fields.
		0	Do not align SYSCLK13 to other SYSCLKs during GO operation. If SYS13 in DCHANGE is set to 1, SYSCLK13 switches to the new ratio immediately after the GOSET bit in PLLCMD is set.
		1	Align SYSCLK13 to other SYSCLKs selected in ALNCTL when the GOSET bit in PLLCMD is set. The SYSCLK13 ratio is set to the ratio programmed in the RATIO bit in PLLDIV13.
11	Reserved	1	Reserved. The reserved bit location is always read as 1. A value written to this field has no effect.
10	ALN11		SYSCLK11 alignment. Do not change the default values of these fields.
		0	Do not align SYSCLK11 to other SYSCLKs during GO operation. If SYS11 in DCHANGE is set to 1, SYSCLK11 switches to the new ratio immediately after the GOSET bit in PLLCMD is set.
		1	Align SYSCLK11 to other SYSCLKs selected in ALNCTL when the GOSET bit in PLLCMD is set. The SYSCLK11 ratio is set to the ratio programmed in the RATIO bit in PLLDIV11.
9:0	Reserved	1	Reserved. The reserved bit location is always read as 1. A value written to this field has no effect.

Copyright © 2008–2011, Texas Instruments Incorporated

7.8.3.8 PLLDIV Divider Ratio Change Status Register

Whenever a different ratio is written to the PLLDIV*n* registers, the PLLCTRL flags the change in the PLLDIV ratio change status registers (DCHANGE). During the GO operation, the PLL controller will only change the divide ratio of the SYSCLKs with the bit set in DCHANGE. Note that changed clocks will be automatically aligned to other clocks. The PLLDIV divider ratio change status register is shown in Figure 7-18 and described in Table 7-32.

31 16
Reserved
R-0

15 13	12	11	10	9 0
Reserved	SYS13	Rsvd	SYS11	Reserved
R-0	R/W-0	R-0	R/W-0	R-0

LEGEND: R/W = Read/Write; R = Read only; -*n* = value after reset

Figure 7-18. PLLDIV Divider Ratio Change Status Register (DCHANGE) [Hex Address: 029A 0144]

Table 7-32. PLLDIV Divider Ratio Change Status Register (DCHANGE) Field Descriptions

Bit	Field	Value	Description
31:13	Reserved	0	Reserved. The reserved bit location is always read as 0. A value written to this field has no effect.
12	SYS13		Identifies when the SYSCLK13 divide ratio has been modified.
		0	SYSCLK13 ratio has not been modified. When GOSET is set, SYSCLK13 will not be affected.
		1	SYSCLK13 ratio has been modified. When GOSET is set, SYSCLK13 will change to the new ratio.
11	Reserved	0	Reserved. The reserved bit location is always read as 0. A value written to this field has no effect.
10	SYS11		Identifies when the SYSCLK11 divide ratio has been modified.
		0	SYSCLK11 ratio has not been modified. When GOSET is set, SYSCLK11 will not be affected.
		1	SYSCLK11 ratio has been modified. When GOSET is set, SYSCLK11 will change to the new ratio.
2:0	Reserved	0	Reserved. The reserved bit location is always read as 0. A value written to this field has no effect.

Copyright © 2008–2011, Texas Instruments Incorporated

7.8.3.9 SYSCLK Status Register

The SYSCLK status register (SYSTAT) shows the status of the system clocks (SYSCLK*n*). SYSTAT is shown in Figure 7-19 and described in Table 7-33.

31	16
Reserved	
R-1	

15	13	12	11	10	9	8
Reserved		SYS13ON	SYS12ON	SYS11ON	SYS10ON	SYS9ON
R-1		R-1	R-1	R-1	R-1	R-1

7	6	5	0
SYS8ON	SYS7ON	Reserved	
R-1	R-1	R-1	

LEGEND: R = Read only; -*n* = value after reset

Figure 7-19. SYSCLK Status Register (SYSTAT) [Hex Address: 029A 0150]

Table 7-33. SYSCLK Status Register (SYSTAT) Field Descriptions

Bit	Field	Value	Description
31:13	Reserved	1	Reserved. The reserved bit location is always read as 1. A value written to this field has no effect.
12:6	SYS*n*ON		SYSCLK*n* on status.
		0	SYSCLK*n* is gated.
		1	SYSCLK*n* is on.
5:0	Reserved	1	Reserved. The reserved bit location is always read as 1. A value written to this field has no effect.

Copyright © 2008–2011, Texas Instruments Incorporated

7.8.4 PLL1 Controller Input and Output Electrical Data/Timing

Table 7-34. Timing Requirements for SYSCLK and ALTCORECLK(1)

(see Figure 7-20)

NO.	PARAMETERS		MIN	MAX	UNIT
		AIF Used, CORECLKSEL=0			
1	$t_{c(SYSCLK)}$	Cycle time, SYSCLK(N|P)	16.276	16.276	ns
2	$t_{w(SYSCLKH)}$	Pulse duration, SYSCLK(N|P) high	0.4C		ns
3	$t_{w(SYSCLKL)}$	Pulse duration, SYSCLK(N|P) low	0.4C		ns
4	$t_{t(SYSCLK)}$	Transition time, SYSCLK(N|P)	50	1300	ps
5	$t_{j(SYSCLK)}$	Period Jitter (RMS), SYSCLK(N|P)		4	ps
		AIF Used, CORECLKSEL=1			
1	$t_{c(SYSCLK)}$	Cycle time, SYSCLK(N|P)	6.51	16.276	ns
2	$t_{w(SYSCLKH)}$	Pulse duration, SYSCLK(N|P) high	0.4C		ns
3	$t_{w(SYSCLKL)}$	Pulse duration, SYSCLK(N|P) low	0.4C		ns
4	$t_{t(SYSCLK)}$	Transition time, SYSCLK(N|P)	50	1300	ps
5	$t_{j(SYSCLK)}$	Period Jitter (RMS), SYSCLK(N|P)		4	ps
		CORECLKSEL=1			
1	$t_{c(ALTCORECLK)}$	Cycle time, ALTCORECLK(N|P)	16(2)	25.00	ns
2	$t_{w(ALTCORECLK)}$	Pulse duration, ALTCORECLK(N|P) high	0.4C		ns
3	$t_{w(ALTCORECLKL)}$	Pulse duration, ALTCORECLK(N|P) low	0.4C		ns
4	$t_{t(ALTCORECLK)}$	Transition time, ALTCORECLK(N|P)	50	1300	ps
5	$t_{j(ALTCORECLK)}$	Period Jitter (peak-to-peak), ALTCORECLK(N|P)		100	ps
		SYSCLKOUT			
1	$t_{c(CKO)}$	Cycle time, SYSCLKOUT	10C	32C	ns
2	$t_{w(CKOH)}$	Pulse duration, SYSCLKOUT high	4C - 0.7	32C + 0.7	ns
3	$t_{w(CKOL)}$	Pulse duration, SYSCLKOUT low	4C - 0.7	32C + 0.7	ns
4	$t_{t(CKO)}$	Transition time, SYSCLKOUT		1	ns

(1) If CORECLKSEL = 0, C = 1/SYSCLK(NIP) frequency, in ns. If CORECLKSEL = 1, C = 1/ALTCORECLK frequency, in ns.
(2) For the 850-MHz device, the minimum ALTCORECLK(N|P) must initially be 18.83 ns due to the boot ROM setting the default PLL1 multiplier to x16, resulting in SYSCLKOUT = 850 MHz.

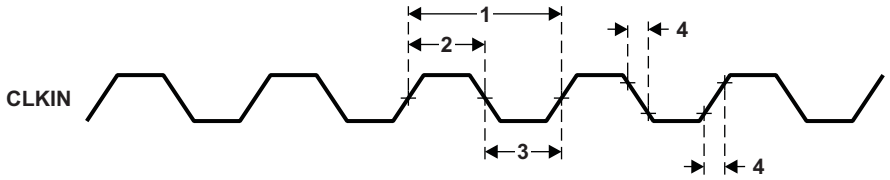

Figure 7-20. CLKIN Timing

7.9 PLL2 and PLL2 Controller

The secondary PLL controller generates interface clocks for the DDR2 memory controller. The CLKIN2 input for PLL2 is DDRREFCLK. It is a differential clock input and is applied at the DDRREFCLKP and DDRREFCLKN pins. When coming out of power-on reset, PLL2 is enabled and initialized.

As shown in Figure 7-21, the PLL2 controller features a PLL multiplier controller. The PLL multiplier is fixed to a x10 multiplier rate.

PLL2 power is supplied externally via the PLL2 power supply (AV_{DD218}). An external PLL filter circuit must be added to AV_{DD218} as shown in Figure 7-21. The 1.8-V supply for the EMI filter must be from the same 1.8-V power plane supplying the I/O power-supply pin, DV_{DD18}. TI requires EMI filter manufacturer Murata. For more information on the external PLL filter or the EMI filter, see the *TMS320C6474 Hardware Design Guide* application report (literature number SPRAAW7).

All PLL external components (capacitors and the EMI filter) should be placed as close to the C64x+ DSP device as possible. For the best performance, TI requires that all the PLL external components be on a single side of the board without jumpers, switches, or components other than the ones shown. For reduced PLL jitter, maximize the spacing between switching signals and the PLL external components (capacitors and the EMI filter). The minimum CLKIN2 rise and fall times should also be observed.

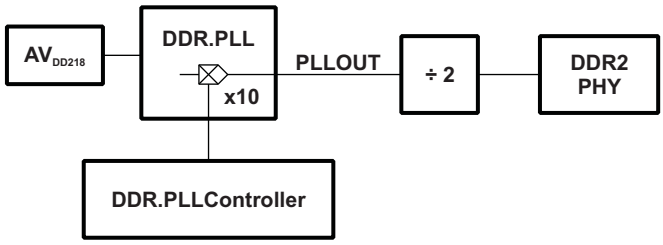

Figure 7-21. PLL2 Block Diagram

7.9.1 PLL2 Controller Device-Specific Information

7.9.1.1 Internal Clocks and Maximum Operating Frequencies

As shown in Figure 7-21, the output of PLL2, PLLOUT, is divided by 2 and directly fed to the DDR2 memory controller. This clock is used by the DDR2 memory controller to generate DDR2CLKOUT0[P/N] and DDR2CLKOUT1[P/N]. Note that, internally, the data bus interface of the DDR2 memory controller is clocked by SYSCLK2 and PLL1 controller.

Note that there is a minimum and maximum operating frequency for DDRREFCLK and PLLOUT. The clock generator and PLL multiplier must not be configured to exceed any of these constraints. For the PLL clocks input and output frequency ranges, see Table 7-35. DDRREFCLK is a differential clock input to PLL2 and is applied at the DDRREFCLKP and DDRREFCLKN pins.

Table 7-35. PLL2 Clock Frequency Ranges

	MIN	MAX	UNIT
DDRREFCLK (PLLEN = 1)	40	66.7	MHz
PLLOUT	400	667	MHz
DDR2CLKOUT0[P/N] and DDR2CLKOUT1[P/N]	200	333	MHz

Copyright © 2008–2011, Texas Instruments Incorporated

7.9.1.2 PLL2 Controller Operating Modes

Unlike the PLL1 controller which can operate in by_pass and _PLL mode, the PLL2 controller only operates in PLL mode. In this mode, SYSREFCLK is generated outside the PLL2 controller by dividing the output by two.

The PLL2 controller is affected by power-on reset and warm reset. During these resets, the PLL2 controller registers get reset to their default values. The internal clocks of the PLL2 controller are also affected as described in Section 7.7, *Reset Controller*.

PLL2 is only unlocked during the power-up sequence (see Section 7.7, *Reset Controller*) and is locked by the time the RESETSTAT pin goes high. It does not lose lock during any of the other resets.

7.9.2 PLL2 Controller Input and Output Electrical Data/Timing

Table 7-36. Timing Requirements for DDRREFCLK(N|P)(1)

(see Figure 7-22)

NO.	PARAMETERS		MIN	MAX	UNIT
1	$t_{c(DDRREFCLK)}$	Cycle time, DDRREFCLK(N|P)	15	25	ns
2	$t_{w(DDRREFCLKH)}$	Pulse duration, DDRREFCLK(N|P) high	0.4C		ns
3	$t_{w(DDRREFCLKL)}$	Pulse duration, DDRREFCLK(N|P) low	0.4C		ns
4	$t_{t(DDRREFCLK)}$	Transition time, DDRREFCLK(N|P)	50	1300	ps
5	$t_{j(DDRREFCLK)}$	Period jitter (peak-to-peak), DDRREFCLK(N|P)		0.02 x $t_{c(DDRREFCLK)}$	ps

(1) C=1/DDRREFCLK(N|P)

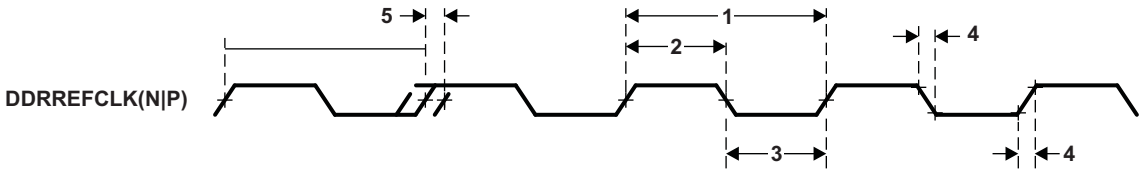

Figure 7-22. DDRREFCLK(N|P) Timing

7.10 DDR2 Memory Controller

The 32-bit DDR2 Memory Controller bus of the C6474 device is used to interface to JESD79-2B standard-compliant DDR2 SDRAM devices. The DDR2 bus is designed to sustain a throughput of up to 2.67 GBps at a 667-MHz data rate (333-MHz clock rate) as long as data requests are pending in the DDR2 Memory Controller.

The DDR2 external bus only interfaces to DDR2 SDRAM devices; it does not share the bus with any other types of peripherals.

7.10.1 DDR2 Memory Controller Device-Specific Information

The approach to specifying interface timing for the DDR2 memory bus is different than on other interfaces such as McBSP. For these other interfaces the device timing was specified in terms of data manual specifications and I/O buffer information specification (IBIS) models.

For the C6474 DDR2 memory bus, the approach is to specify compatible DDR2 devices and provide the printed circuit board (PCB) solution and guidelines directly to the user. Texas Instruments (TI) has performed the simulation and system characterization to ensure all DDR2 interface timings in this solution are met. The complete DDR2 system solution is documented in the *TMS320C6474 DDR2 Implementation Guidelines* application report (literature number SPRAAW8).

TI *only* supports designs that follow the board design guidelines outlined in the SPRAAW8 application report.

The DDR2 memory controller on the C6474 device supports the following memory topologies:

- 32-bit wide configuration interfacing to two 16-bit wide DDR2 SDRAM devices.
- 16-bit wide configuration interfacing to a single 16-bit wide DDR2 SDRAM device.

A race condition may exist when certain masters write data to the DDR2 memory controller. For example, if master A passes a software message via a buffer in external memory and does not wait for indication that the write completes, when master B attempts to read the software message, then the master B read may bypass the master A write and, thus, master B may read stale data and, therefore, receive an incorrect message.

Some master peripherals (e.g., EDMA3 transfer controllers) will always wait for the write to complete before signaling an interrupt to the system, thus avoiding this race condition. For masters that do not have hardware specification of write-read ordering, it may be necessary to specify data ordering via software.

If master A does not wait for an indication that a write is complete, it must perform the following workaround:

1. Perform the required write.
2. Perform a dummy write to the DDR2 memory controller module ID and revision register.
3. Perform a dummy read to the DDR2 memory controller module ID and revision register.
4. Indicate to master B that the data is ready to be read after completion of the read in step 3. The completion of the read in step 3 ensures that the previous write was done.

Copyright © 2008–2011, Texas Instruments Incorporated

7.10.2 DDR2 Memory Controller Peripheral Register Description(s)

The memory map of the DDR2 controller is shown in Table 7-37.

Table 7-37. DDR2 Memory Controller Registers

HEX ADDRESS	ACRONYM	REGISTER NAME
7000 0000	MIDR	DDR2 Memory Controller Module and Revision Register
7000 0004	DMCSTAT	DDR2 Memory Controller Status Register
7000 0008	SDCFG	DDR2 Memory Controller SDRAM Configuration Register
7000 000C	SDRFC	DDR2 Memory Controller SDRAM Refresh Control Register
7000 0010	SDTIM1	DDR2 Memory Controller SDRAM Timing 1 Register
7000 0014	SDTIM2	DDR2 Memory Controller SDRAM Timing 2 Register
7000 0018	-	Reserved
7000 0020	BPRIO	DDR2 Memory Controller Burst Priority Register
7000 0024 - 7000 004C	-	Reserved
7000 0050 - 7000 0078	-	Reserved
7000 007C - 7000 00BC	-	Reserved
7000 00C0 - 7000 00E0	-	Reserved
7000 00E4	DMCCTL	DDR2 Memory Controller Control Register
7000 00E8 - 7000 00EC	-	Reserved
7000 00F0	DDR2IO	Control Register DDR2 ODT control register is at 0x7000 00F0 Bits 1:0 are the ODT status, these bits are Read/Write 00 no termination 01 half termination 11 full termination Bits 31:2 are Reserved
7000 00F4 - 7000 00FC	-	Reserved
7000 0100 - 7FFF FFFF	-	Reserved

Copyright © 2008–2011, Texas Instruments Incorporated

7.10.3 DDR2 Memory Controller Electrical Data/Timing

The *TMS320C6474 DDR2 Implementation Guidelines* application report (literature number SPRAAW8) specifies a complete DDR2 interface solution for the C6474 device as well as a list of compatible DDR2 devices. TI has performed the simulation and system characterization to ensure all DDR2 interface timings in this solution are met.

TI *only* supports designs that follow the board design guidelines outlined in the SPRAAW8 application report.

Table 7-38. Timing Requirements for DDRREFCLK(N|P)(1)

(see Figure 7-23)

NO.	PARAMETERS		MIN	MAX	UNIT
1	$t_{c(DDRREFCLK)}$	Cycle time, DDRREFCLK(N|P)	15	25	ns
2	$t_{w(DDRREFCLKH)}$	Pulse duration, DDRREFCLK(N|P) high	0.4C		ns
3	$t_{w(DDRREFCLKL)}$	Pulse duration, DDRREFCLK(N|P) low	0.4C		ns
4	$t_{t(DDRREFCLK)}$	Transition time, DDRREFCLK(N|P)	50	1300	ps
5	$t_{j(DDRREFCLK)}$	Period jitter (peak-to-peak), DDRREFCLK(N|P)		0.02 x $t_{c(DDRREFCLK)}$	ps

(1) C=1/DDRREFCLK(N|P)

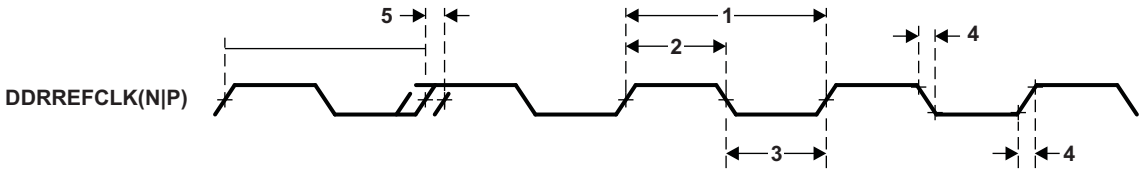

Figure 7-23. DDRREFCLK(N|P) Timing

Copyright © 2008–2011, Texas Instruments Incorporated

7.11 I2C Peripheral

The inter-integrated circuit (I2C) module provides an interface between a C64x+ DSP and other devices compliant with Philips Semiconductors Inter-IC bus (I2C bus) specification version 2.1 and connected by way of an I2C-bus. External components attached to this 2-wire serial bus can transmit/receive up to 8-bit data to/from the DSP through the I2C module.

7.11.1 I2C Device-Specific Information

The C6474 device includes an I2C peripheral module (I2C). NOTE: when using the I2C module, ensure there are external pullup resistors on the SDA and SCL pins.

The I2C modules on the C6474 may be used by the DSP to control local peripherals ICs (DACs, ADCs, etc.) or may be used to communicate with other controllers in a system or to implement a user interface.

The I2C port supports:

- Compatible with Philips I2C Specification Revision 2.1 (January 2000)
- Fast Mode up to 400 Kbps (no fail-safe I/O buffers)
- Noise Filter to remove noise 50 ns or less
- 7- and 10-Bit Device Addressing Modes
- Multi-Master (Transmit/Receive) and Slave (Transmit/Receive) Functionality
- Events: DMA, Interrupt, or Polling
- Slew-Rate Limited Open-Drain Output Buffers

Figure 7-24 is a block diagram of the I2C module.

Copyright © 2008–2011, Texas Instruments Incorporated

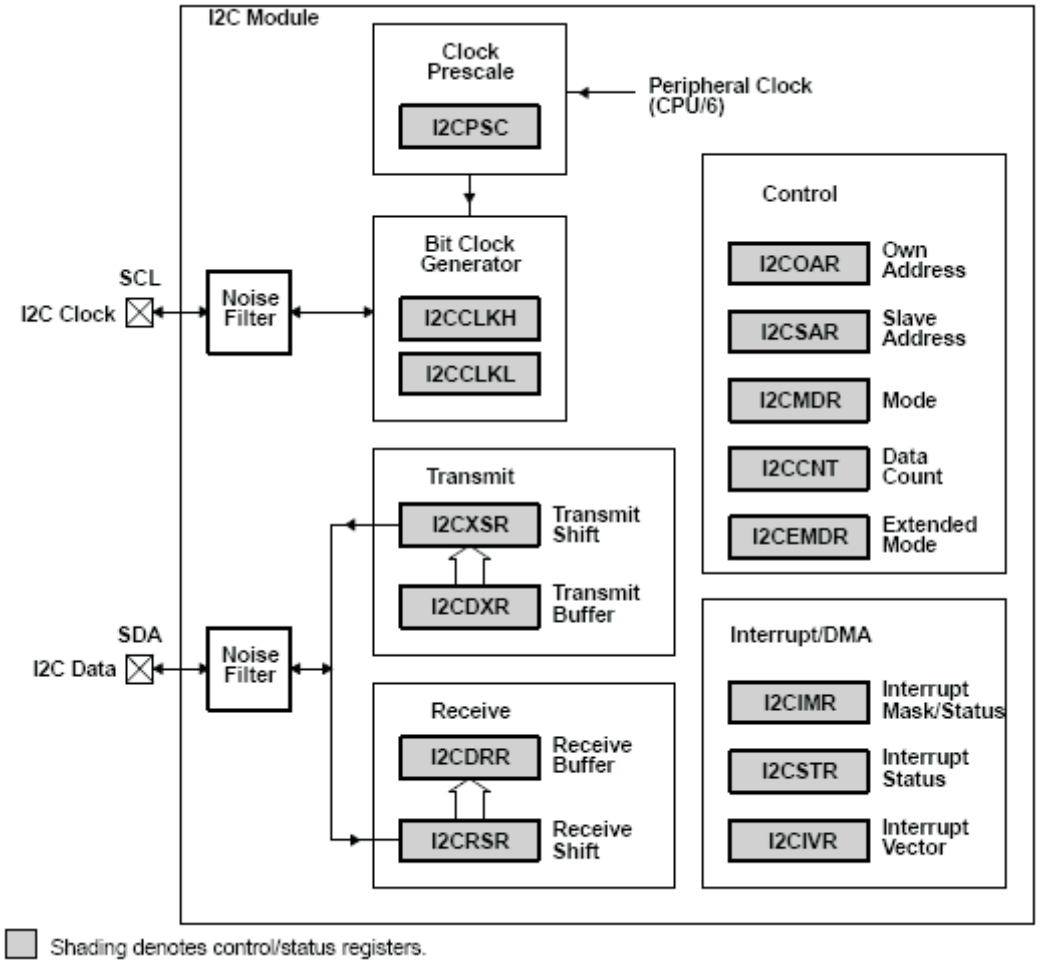

Figure 7-24. I2C Module Block Diagram

Copyright © 2008–2011, Texas Instruments Incorporated

7.11.2 I2C Peripheral Register Description(s)

The memory map of the I2C is shown in Table 7-39.

Table 7-39. I2C Registers

HEX ADDRESS	ACRONYM	REGISTER NAME
02B0 4000	ICOAR	I2C Own Address Register
02B0 4004	ICIMR	I2C Interrupt Mask/Status Register
02B0 4008	ICSTR	I2C Interrupt Status Register
02B0 400C	ICCLKL	I2C Clock Low-Time Divider Register
02B0 4010	ICCLKH	I2C Clock High-Time Divider Register
02B0 4014	ICCNT	I2C Data Count Register
02B0 4018	ICDRR	I2C Data Receive Register
02B0 401C	ICSAR	I2C Slave Address Register
02B0 4020	ICDXR	I2C Data Transmit Register
02B0 4024	ICMDR	I2C Mode Register
02B0 4028	ICIVR	I2C Interrupt Vector Register
02B0 402C	ICEMDR	I2C Extended Mode Register
02B0 4030	ICPSC	I2C Prescaler Register
02B0 4034	ICPID1	I2C Peripheral Identification Register 1 [Value: 0x0000 0105]
02B0 4038	ICPID2	I2C Peripheral Identification Register 2 [Value: 0x0000 0005]
02B0 403C - 02B0 405C	-	Reserved
02B0 4060 - 02B0 407F	-	Reserved
02B0 4080 - 02B3 FFFF	-	Reserved

Copyright © 2008–2011, Texas Instruments Incorporated

7.11.3 I2C Electrical Data/Timing

Table 7-40. Timing Requirements for I2C Timings(1)

(see Figure 7-25)

NO.			STANDARD MODE		FAST MODE		UNIT
			MIN	MAX	MIN	MAX	
1	$t_{c(SCL)}$	Cycle time, SCL	10		2.5		µs
2	$t_{su(SCLH-SDAL)}$	Setup time, SCL high before SDA low (for a repeated START condition)	4.7		0.6		µs
3	$t_{h(SCLL-SDAL)}$	Hold time, SCL low after SDA low (for a START and a repeated START condition)	4		0.6		µs
4	$t_{w(SCLL)}$	Pulse duration, SCL low	4.7		1.3		µs
5	$t_{w(SCLH)}$	Pulse duration, SCL high	4		0.6		µs
6	$t_{su(SDAV-SDLH)}$	Setup time, SDA valid before SCL high	250		100(2)		µs
7	$t_{h(SDA-SDLL)}$	Hold time, SDA valid after SCL low (for I2C bus™ devices)	0(3)		0	0.9(4)	µs
8	$t_{w(SDAH)}$	Pulse duration, SDA high between STOP and START conditions.	4.7		1.3		µs
9	$t_{r(SDA)}$	Rise time, SDA		1000	20 + 0.1C_b	300	ns
10	$t_{r(SCL)}$	Rise time, SCL		1000	20 + 0.1C_b	300	ns
11	$t_{f(SDA)}$	Fall time, SDA		300	20 + 0.1C_b	300	ns
12	$t_{f(SCL)}$	Fall time, SCL		300	20 + 0.1C_b	300	ns
13	$t_{su(SCLH-SDAH)}$	Setup time, SCL high before SDA high (for STOP condition)	4		0.6		µs
14	$t_{w(SP)}$	Pulse duration, spike (must be suppressed)			0	50	ns
15	C_b (5)	Capacitive load for each bus line		400		400	pF

(1) The I2C pins SDA and SCL do not feature fail-safe I/O buffers. These pins could potentially draw current when the device is powered down.
(2) A fast-mode I2C-bus device can be used in a standard-mode I2C-bus system, but the requirement, $t_{su(SDA-SCLH)} \geq$ 250 ns, must then be met. This will automatically be the case if the device does not stretch the LOW period of the SCL signal. If such a device does stretch the LOW period of the SCL signal, it must output the next data bit to the SDA line, T_r max + $T_{su(SDA-SCLH)}$ = 1000 + 250 + 1250 ns (according to the standard-mode I2C-bus specification), before the SCL line is released.
(3) A device must internally provide a hold time of at least 300 ns for the SDA signal (referred to the V_{IHmin} of the SCL signal) to bridge the undefined region of the falling edge of SCL.
(4) The maximum, $t_{h(SDA-SCLL)}$, has only to be met if the device does not stretch the low period, $t_{w(SCLL)}$, of the SCL signal.
(5) C_b = total capacitance of one bus line, in pF. If mixed with HS-mode devices, faster fall-times are allowed.

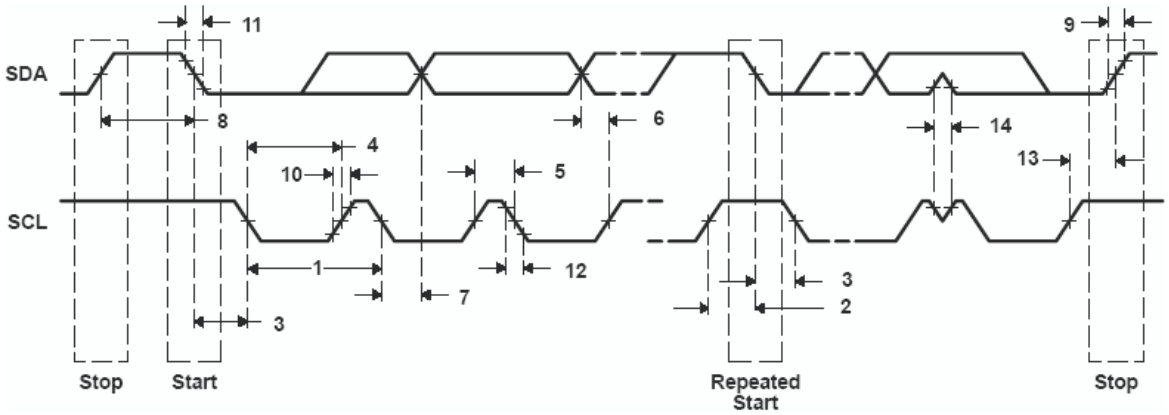

Figure 7-25. I2C Receive Timings

Copyright © 2008–2011, Texas Instruments Incorporated

Table 7-41. Switching Characteristics for I2C Timings (1)

(see Figure 7-26)

NO.			STANDARD MODE		FAST MODE		UNIT
			MIN	MAX	MIN	MAX	
16	$t_{c(SCL)}$	Cycle time, SCL	10		2.5		µs
17	$t_{d(SCLH-SDAL)}$	Delay time, SCL high to SDA low (for a repeated START condition)	4.7		0.6		µs
18	$t_{d(SDAL-SCLL)}$	Delay time, SDA low to SCL low (for a START and a repeated START condition)	4		0.6		µs
19	$t_{w(SCLL)}$	Pulse duration, SCL low	4.7		1.3		µs
20	$t_{w(SCLH)}$	Pulse duration, SCL high	4		0.6		µs
21	$t_{d(SDAV-SDLH)}$	Delay time, SDA valid to SCL high	250		100		ns
22	$t_{tw(SDLL-SDAV)}$	Valid time, SDA valid after SCL low (for PC bus devices)	0		0	0.9	µs
23	$T_{w(SDAH)}$	Pulse duration, SDA high between STOP and START conditions	4.7		1.3		µs
24	$t_{r(SDA)}$	Rise time, SDA		1000	$20 + 0.1C_b$ (1)	300	ns
25	$t_{r(SDL)}$	Rise time, SCL		1000	$20 + 0.1C_b$ (1)	300	ns
26	$t_{f(SDA)}$	Fall time, SDA		300	$20 + 0.1C_b$ (1)	300	ns
27	$t_{f(SCL)}$	Fall time, SCL		300	$20 + 0.1C_b$ (1)	300	ns
28	$t_{d(SCLH-SDAH)}$	Delay time, SCL high to SDA high (for STOP condition)	4		0.6		µs
29	C_p	Capacitance for each I2C pin		10		10	pF

(1) C_b = total capacitance of one bus line, in pF. If mixed with HS-mode devices, faster fall-times are allowed.

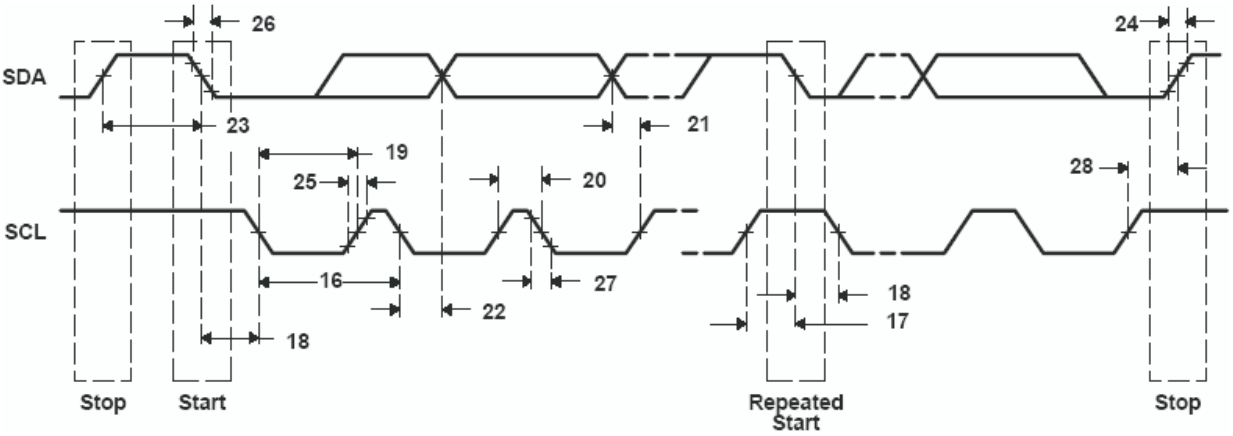

Figure 7-26. I2C Transmit Timings

7.12 Multichannel Buffered Serial Port (McBSP)

The McBSP provides these functions:

- Full-duplex communication
- Double-buffered data registers, which allow a continuous data stream
- Independent framing and clocking for receive and transmit
- Direct interface to industry-standard codecs, analog interface chips (AICs), and other serially connected analog-to-digital (A/D) and digital-to-analog (D/A) devices
- External shift clock or an internal, programmable frequency shift clock for data transfer
- SPI operation in master mode only

For more detailed information on the McBSP peripheral, see the *TMS320C6474 DSP Multichannel Buffered Serial Port (McBSP) Reference Guide* (literature number SPRUG17).

7.12.1 McBSP Device-Specific Information

The CLKS signal for MCBSP0 and MCBSP1 can be sourced from an external pin or by PLL Controller 1. For details, see Section 7.8. If the clock from the PLL Controller 1 is used, the clock is shared between the two McBSPs.Figure 7-27 shows the sample rate generator clock (CLKSRG) selection logical diagram.

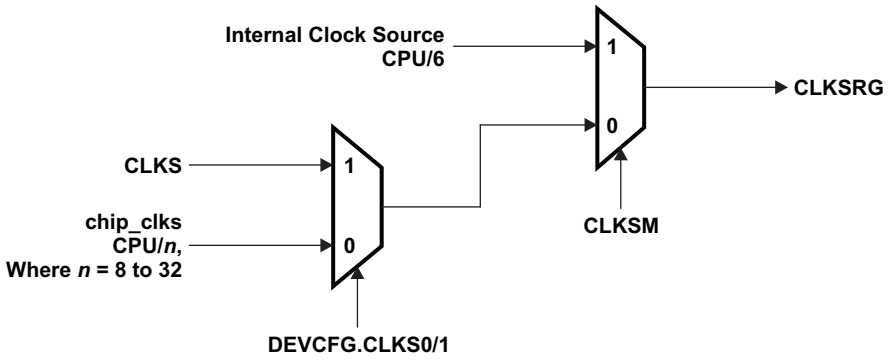

A. For more details, see SYSCLK11 description in Section 7.8.1.1.

Figure 7-27. Sample Rate Generator Clock (CLKSRG)

7.12.2 McBSP Peripheral Register Descriptions

The memory map of the McBSP 0 registers is shown in Table 7-42.

Table 7-42. McBSP 0 Registers

HEX ADDRESS	ACRONYM	REGISTER NAME
028C 0000	DRR0	McBSP0 Data Receive Register via Configuration Bus. Note: The CPU and EDMA3 controller can only read this register; they can not write to it.
3000 0000	DRR0	McBSP0 Data Receive Register via EDMA3 Bus
028C 0004	DXR0	McBSP0 Data Transmit Register via Configuration Bus
3000 0010	DXR0	McBSP0 Data Transmit register via EDMA bus
028C 0008	SPCR0	McBSP0 Serial Port Control Register
028C 000C	RCR0	McBSP0 Receive Control Register
028C 0010	XCR0	McBSP0 Transmit Control Register
028C 0014	SRGR0	McBSP0 Sample Rate Generator Register
028C 0018	MCR0	McBSP0 Multichannel Control Register
028C 001C	RCERE00	McBSP0 Enhanced Receive Channel Enable Register 0 Partition A/B
028C 0020	XCERE00	McBSP0 Enhanced Transmit Channel Enable Register 0 Partition A/B
028C 0024	PCR0	McBSP0 Pin Control Register

Copyright © 2008–2011, Texas Instruments Incorporated

Table 7-42. McBSP 0 Registers (continued)

HEX ADDRESS	ACRONYM	REGISTER NAME
028C 0028	RCERE10	McBSP0 Enhanced Receive Channel Enable Register 0 Partition C/D
028C 002C	XCERE10	McBSP0 Enhanced Transmit Channel Enable Register 0 Partition C/D
028C 0030	RCERE20	McBSP0 Enhanced Receive Channel Enable Register 0 Partition E/F
028C 0034	XCERE20	McBSP0 Enhanced Transmit Channel Enable Register 0 Partition E/F
028C 0038	RCERE30	McBSP0 Enhanced Receive Channel Enable Register 0 Partition G/H
028C 003C	XCERE30	McBSP0 Enhanced Transmit Channel Enable Register 0 Partition G/H
028C 0040 - 028C 00FF	-	Reserved

The memory map of the McBSP 1 registers is shown in Table 7-43.

Table 7-43. McBSP 1 Registers

HEX ADDRESS	ACRONYM	REGISTER NAME
028D 0000	DRR1	McBSP1 Data Receive Register via Configuration Bus. Note: The CPU and EDMA3 controller can only read this register; they can not write to it.
3400 0000	DRR1	McBSP1 Data Receive Register via EDMA3 Bus
028D 0004	DXR1	McBSP1 Data Transmit Register via Configuration Bus
3400 0010	DXR1	McBSP1 Data Transmit Register via EDMA Bus
028D 0008	SPCR1	McBSP1 Serial Port Control Register
028D 000C	RCR1	McBSP1 Receive Control Register
028D 0010	XCR1	McBSP1 Transmit Control Register
028D 0014	SRGR1	McBSP1 Sample Rate Generator Register
028D 0018	MCR1	McBSP1 Multichannel Control Register
028D 001C	RCERE01	McBSP1 Enhanced Receive Channel Enable Register 0 Partition A/B
028D 0020	XCERE01	McBSP1 Enhanced Transmit Channel Enable Register 0 Partition A/B
028D 0024	PCR1	McBSP1 Pin Control Register
028D 0028	RCERE11	McBSP1 Enhanced Receive Channel Enable Register 0 Partition C/D
028D 002C	XCERE11	McBSP1 Enhanced Transmit Channel Enable Register 0 Partition C/D
028D 0030	RCERE21	McBSP1 Enhanced Receive Channel Enable Register 0 Partition E/F
028D 0034	XCERE21	McBSP1 Enhanced Transmit Channel Enable Register 0 Partition E/F
028D 0038	RCERE31	McBSP1 Enhanced Receive Channel Enable Register 0 Partition G/H
028D 003C	XCERE3	McBSP1 Enhanced Transmit Channel Enable Register 0 Partition G/H
028D 0040 - 028D 00FF	-	Reserved

Copyright © 2008–2011, Texas Instruments Incorporated

7.12.3 McBSP Electrical Data/Timing

Table 7-44. Timing Requirements for McBSP(1)

(see Figure 7-28)

NO.				MIN	MAX	UNIT
2	$t_{c(CKRX)}$	Cycle time, CLKR/X	CLKR/X ext	10P(2)		ns
3	$t_{w(CKRX)}$	Pulse duration, CLKR/X high or CLKR/X low	CLKR/X ext	0.5t $_{c(CKRX)}$-1(2)		ns
5	$t_{su(FRH-CKRL)}$	Setup time, external FSR high before CLKR low	CLKR int	9		ns
			CLKR ext	1.3		
6	$t_{h(CKRL-FRH)}$	Hold time, external FSR high after CLKR low	CLKR int	6		ns
			CLKR ext	3		
7	$t_{su(DRV-CKRL)}$	Setup time, DR valid before CLKR low	CLKR int	8		ns
			CLKR ext	0.9		
8	$t_{h(CKRL-DRV)}$	Hold time, DR valid after CLKR low	CLKR int	3		ns
			CLKR ext	3.1		
10	$t_{su(FXH-CKXL)}$	Setup time, external FSX high before CLKX low	CLKR int	9		ns
			CLKR ext	1.3		
11	$t_{h(CKXL-FXH)}$	Hold time, external FSX high after CLKX low	CLKR int	6		ns
			CLKR ext	3		

(1) P = 1/CPU Clock in ns.
(2) This parameter applies to the maximum McBSP frequency. Operate serial clocks (CLKR/X) in the reasonable range of 40/60 duty cycles.

Copyright © 2008–2011, Texas Instruments Incorporated

Table 7-45. Switching Characteristics Over Recommended Operating Conditions for McBSP[1] [2]

(see Figure 7-28)

NO.				MIN	MAX	UNIT
1	$t_{d(CKSH-CKRXH)}$	Delay time, CLKS high to CLKR/X high for internal CLKR/X generated from CLKS input.[3]		1.4	10	ns
2	$t_{c(CKRX)}$	Cycle time, CLKR/X	CLKR/X int	10P[4]		ns
3	$t_{w(CKRX)}$	Pulse duration, CLKR/X high or CLKR/X low	CLKR/X int	C - 1[5]	C + 1[5]	ns
4	$t_{d(CKRH-FRV)}$	Delay time, CLKR high to internal FSR valid	CLKR int	-2.1	3	ns
9	$t_{d(CKXH-FXV)}$	Delay time, CLKX high to internal FSX valid	CLKX int	-1.7	3	ns
			CLKX ext	1.7	9	
12	$t_{dis(CKXH-DXHZ)}$	Disable time, DX high impedance following last data bit from CLKX high	CLKX int	-3.9	4	ns
			CLKX ext	2.1	9	
13	$t_{d(CKXH-DXV)}$	Delay time, CLKX high to DX valid	CLKX int	-3.9 +D1[6]	4 + D2[6]	ns
			CLKX ext (DXENA = 0)	2.1[6]	9[6]	
			CLKX ext (DXENA = 1)	2.1 + D1[6]	9 + D2[6]	
14	$t_{d(FXH-DXV)}$	Delay time, FSX high to DX valid ONLY applies when in data delay 0 (XDATDLY = 00b)mode	FSX int	-2.3 + D1[7]	5.6 + D2[7]	ns
			FSX ext	1.9 + D1[7]	9 + D2[7]	

(1) CLKRP = CLKXP = FSRP = FSXP = 0. If polarity of any of the signals is inverted, then the timing references of that signal are also inverted.
(2) Minimum delay times also represent minimum output hold times.
(3) The CLKS signal is shared by both McBSP0 and McBSP1 on this device.
(4) P = 1/CPU clock frequency, in ns. For example, when running parts at 1000 MHz, use P = 1 ns.
(5) C = H or L S = sample rate generator input clock = 6P if CLKSM = 1 (P = 1/CPU clock frequency)
S = sample rate generator input clock = P_clks if CLKSM = 0 (P_clks = CLKS period)
H = CLKX high pulse width = (CLKGDV/2 + 1) * S if CLKGDV is even
H = (CLKGDV + 1)/2 * S if CLKGDV is odd L = CLKX low pulse width = (CLKGDV/2) * S if CLKGDV is even
L = (CLKGDV + 1)/2 * S if CLKGDV is odd CLKGDV should be set appropriately to ensure the McBSP bit rate does not exceed the maximum limit (see (4) above).
(6) Extra delay from CLKX high to DX valid applies only to the first data bit of a device, if and only if DXENA = 1 in SPCR.
if DXENA = 0, then D1 = D2 = 0
if DXENA = 1, then D1 = 6P, D2 = 12P
(7) Extra delay from FSX high to DX valid applies only to the first data bit of a device, if and only if DXENA = 1 in SPCR.
if DXENA = 0, then D1 = D2 = 0
if DXENA = 1, then D1 = 6P, D2 = 12P

Copyright © 2008–2011, Texas Instruments Incorporated

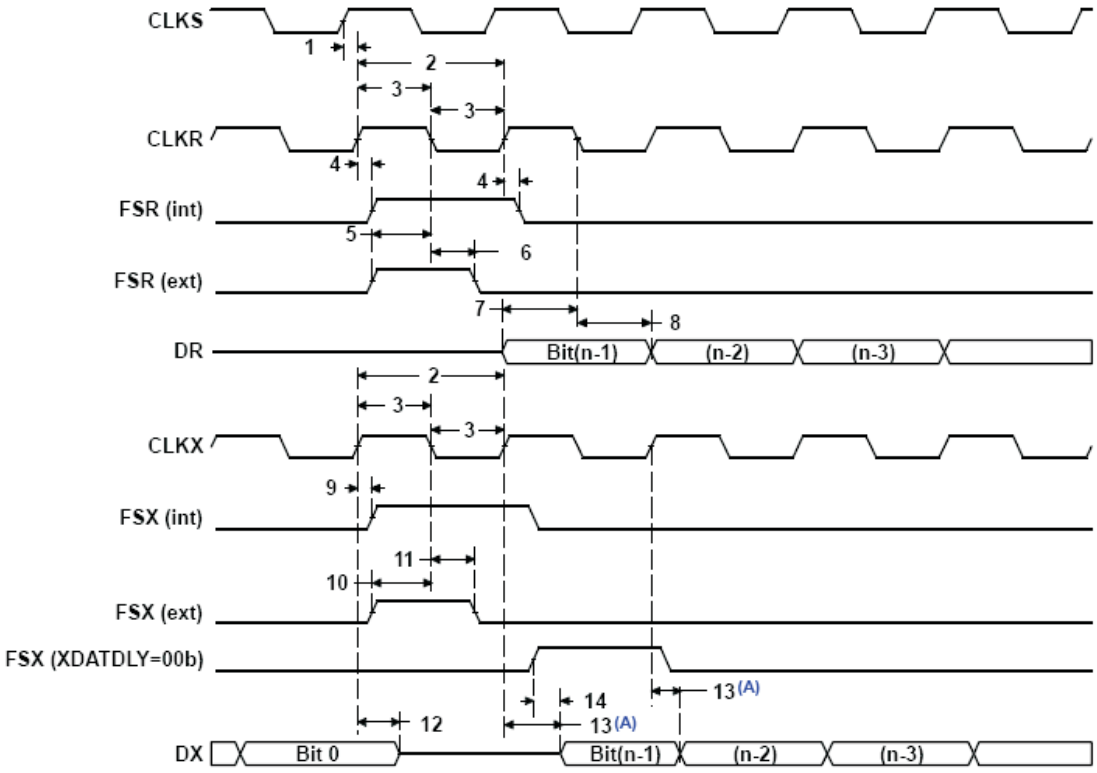

A. Parameter No. 13 applies to the first data bit *only* when XDATDLY ≠ 0.

B. The CLKS signal is shared by both McBSP0 and McBSP1 on this device.

Figure 7-28. McBSP Timing

Table 7-46. Timing Requirements for FSR When GSYNC = 1

(see Figure 7-29)

NO.			MIN	MAX	UNIT
1	$t_{su(FRH-CKSH)}$	Setup time, FSR high before CLKS high	4		ns
2	$t_{h(CKSH-FRH)}$	Hold time, FSR high after CLKS high	4		ns

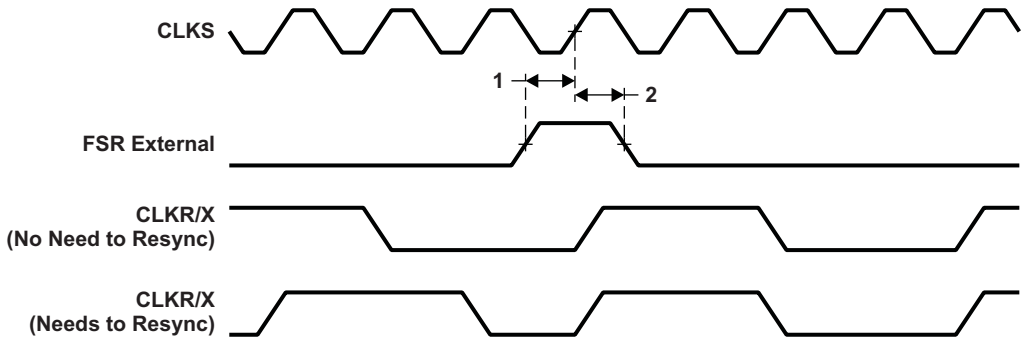

Figure 7-29. FSR Timing When GSYNC = 1

Copyright © 2008–2011, Texas Instruments Incorporated

Table 7-47. Timing Requirements for McBSP as SPI Master: CLKSTP = 10b, CLKXP = 0 (1)

(see Figure 7-30)

NO.			MASTER		SLAVE		UNIT
			MIN	MAX	MIN	MAX	
4	$t_{su(DRV-CKXL)}$	Setup time, DR valid before CLKX low	12		2 - 18P		ns
5	$t_{h(CKXL-DRV)}$	Hold time, DR valid after CLKX low	4		5 + 36P		ns

(1) P = 1/CPU clock frequency in ns. For example, when running parts at 1000 MHz, use P = 1 ns.

Table 7-48. Switching Characteristics Over Recommended Operating Conditions for McBSP as SPI Master: CLKSTP = 10b, CLKXP = 0 (1)

(see Figure 7-30)

NO.	PARAMETER		MASTER (2)		SLAVE		UNIT
			MIN	MAX	MIN	MAX	
1	$t_{h(CKXL-FXL)}$	Hold time, FSX low after CLKX low (3)	T - 2	T + 3			ns
2	$t_{d(FXL-CKXH)}$	Delay time, FSX low to CLKX high (4)	L - 2	L + 3			ns
3	$t_{d(CKXH-DXV)}$	Delay time, CLKX high to DX valid	-2	4	18P + 2.8	30P + 17	ns
6	$t_{dis(CKXL-DXHZ)}$	Disable time, DX high impedance following last data bit from CLKX low	L - 2	L + 3			ns
7	$t_{dis(FXH-DXHZ)}$	Disable time, DX high impedance following last data bit from FSX high			6P + 3	18P + 17	ns
8	$t_{d(FXL-DXV)}$	Delay time, FSX low to DX valid			12P + 2	24P + 17	ns

(1) P = 1/CPU clock frequency in ns. For example, when running parts at 1000 MHz, use P = 1 ns.
(2) S = Sample rate generator input clock = 6P if CLKSM = 1 (P = 1/CPU clock frequency)
S = Sample rate generator input clock = P_clks if CLKSM = 0 (P_clks = CLKS period)
T = CLKX period = (1 + CLKGDV) * S
H = CLKX high pulse width = (CLKGDV/2 + 1) * S if CLKGDV is even
H = (CLKGDV + 1)/2 * S if CLKGDV is odd
L = CLKX low pulse width = (CLKGDV/2) * S if CLKGDV is even
L = (CLKGDV + 1)/2 * S if CLKGDV is odd
(3) FSRP = FSXP = 1. As a SPI Master, FSX is inverted to provide active-low slave-enable output.
CLKXM = FSXM = 1, CLKRM = FSRM = 0 for Master McBSP
(4) FSX should be low before the rising edge of clock to enable Slave devices and then begin a SPI transfer at the rising edge of the Master clock (CLKX).

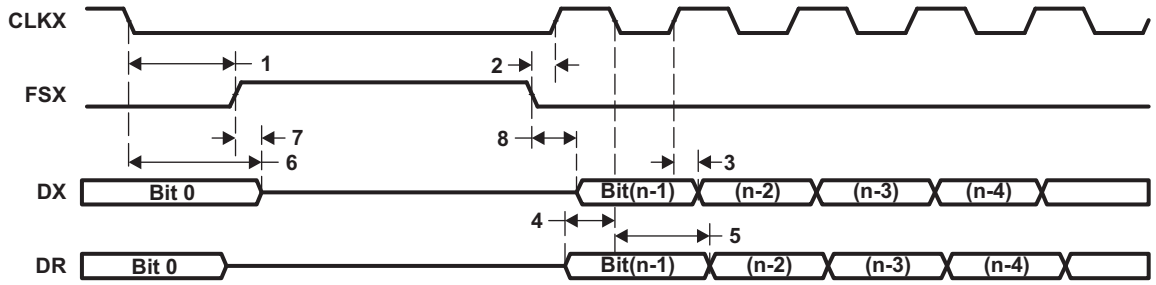

Figure 7-30. McBSP Timing as SPI Master: CLKSTP = 10b, CLKXP = 0

Table 7-49. Timing Requirements for McBSP as SPI Master: CLKSTP = 11b, CLKXP = 0 (1)

(see Figure 7-31)

NO.			MASTER		SLAVE		UNIT
			MIN	MAX	MIN	MAX	
4	$t_{su(DRV-CKXH)}$	Setup time, DR valid before CLKX high	12		2 - 18P		ns
5	$t_{h(CKXH-DRV)}$	Hold time, DR valid after CLKX high	4		5 + 36P		ns

(1) P = 1/CPU clock frequency in ns. For example, when running parts at 1000 MHz, use P = 1 ns.

Table 7-50. Switching Characteristics Over Recommended Operating Conditions for McBSP as SPI Master: CLKSTP = 11b, CLKXP = 0 (1)

(see Figure 7-31)

NO.	PARAMETER		MASTER (2)		SLAVE		UNIT
			MIN	MAX	MIN	MAX	
1	$t_{h(CKXL-FXL)}$	Hold time, FSX low after CLKX low (3)	L - 2	L + 3			ns
2	$t_{d(FXL-CKXH)}$	Delay time, FSX low to CLKX high (4)	T - 2	T + 3			ns
3	$t_{d(CKXL-DXV)}$	Delay time, CLKX low to DX valid	-2	4	18P + 2.8	30P + 17	ns
6	$t_{dis(CKXL-DXHZ)}$	Disable time, DX high impedance following last data bit from CLKX low	-2	4	18P + 3	30P + 17	ns
7	$t_{d(FXL-DXV)}$	Delay time, FSX low to DX valid	H - 2	H + 4	12P + 2	24P + 17	ns

(1) P = 1/CPU clock frequency in ns. For example, when running parts at 1000 MHz, use P = 1 ns.
(2) S = Sample rate generator input clock = 6P if CLKSM = 1 (P = 1/CPU clock frequency)
S = Sample rate generator input clock = P_clks if CLKSM = 0 (P_clks = CLKS period)
T = CLKX period = (1 + CLKGDV) * S
H = CLKX high pulse width = (CLKGDV/2 + 1) * S if CLKGDV is even
H = (CLKGDV + 1)/2 * S if CLKGDV is odd
L = CLKX low pulse width = (CLKGDV/2) * S if CLKGDV is even
L = (CLKGDV + 1)/2 * S if CLKGDV is odd
(3) FSRP = FSXP = 1. As a SPI Master, FSX is inverted to provide active-low slave-enable output.
CLKXM = FSXM = 1, CLKRM = FSRM = 0 for Master McBSP
(4) FSX should be low before the rising edge of clock to enable Slave devices and then begin a SPI transfer at the rising edge of the Master clock (CLKX).

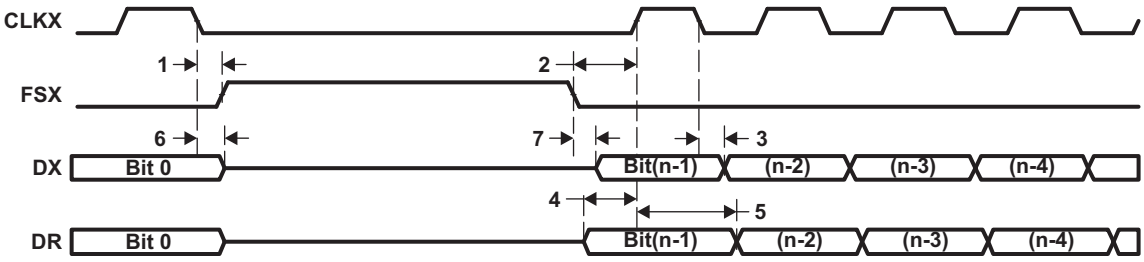

Figure 7-31. McBSP Timing as SPI Master: CLKSTP = 11b, CLKXP = 0

Copyright © 2008–2011, Texas Instruments Incorporated

Table 7-51. Timing Requirements for McBSP as SPI Master: CLKSTP = 10b, CLKXP = 1[1]

(see Figure 7-32)

NO.			MASTER		SLAVE		UNIT
			MIN	MAX	MIN	MAX	
4	$t_{su(DRV-CKXH)}$	Setup time, DR valid before CLKX high	12		2 - 18P		ns
5	$t_{h(CKXH-DRV)}$	Hold time, DR valid after CLKX high	4		5 + 36P		ns

(1) P = 1/CPU clock frequency in ns. For example, when running parts at 1000 MHz, use P = 1 ns.

Table 7-52. Switching Characteristics Over Recommended Operating Conditions for McBSP as SPI Master: CLKSTP = 10b, CLKXP = 1[1]

(see Figure 7-32)

NO.	PARAMETER		MASTER[2]		SLAVE		UNIT
			MIN	MAX	MIN	MAX	
1	$t_{h(CKXH-FXL)}$	Hold time, FSX low after CLKX high[3]	T - 2	T + 3			ns
2	$t_{d(FXL-CKXL)}$	Delay time, FSX low to CLKX low[4]	H - 2	H + 3			ns
3	$t_{d(CKXL-DXV)}$	Delay time, CLKX low to DX valid	-2	4	18P + 2.8	30P + 17	ns
6	$t_{dis(CKXH-DXHZ)}$	Disable time, DX high impedance following last data bit from CLKX high	H - 2	H + 3			ns
7	$t_{dis(FXH-DXHZ)}$	Disable time, DX high impedance following last data bit from FSX high			6P + 3	18P + 17	ns
8	$t_{d(FXL-DXV)}$	Delay time, FSX low to DX valid			12P + 2	24P + 17	ns

(1) P = 1/CPU clock frequency in ns. For example, when running parts at 1000 MHz, use P = 1 ns.
(2) S = Sample rate generator input clock = 6P if CLKSM = 1 (P = 1/CPU clock frequency)
S = Sample rate generator input clock = P_clks if CLKSM = 0 (P_clks = CLKS period)
T = CLKX period = (1 + CLKGDV) * S
H = CLKX high pulse width = (CLKGDV/2 + 1) * S if CLKGDV is even
H = (CLKGDV + 1)/2 * S if CLKGDV is odd
L = CLKX low pulse width = (CLKGDV/2) * S if CLKGDV is even
L = (CLKGDV + 1)/2 * S if CLKGDV is odd
(3) FSRP = FSXP = 1. As a SPI Master, FSX is inverted to provide active-low slave-enable output.
CLKXM = FSXM = 1, CLKRM = FSRM = 0 for Master McBSP
(4) FSX should be low before the rising edge of clock to enable Slave devices and then begin a SPI transfer at the rising edge of the Master clock (CLKX).

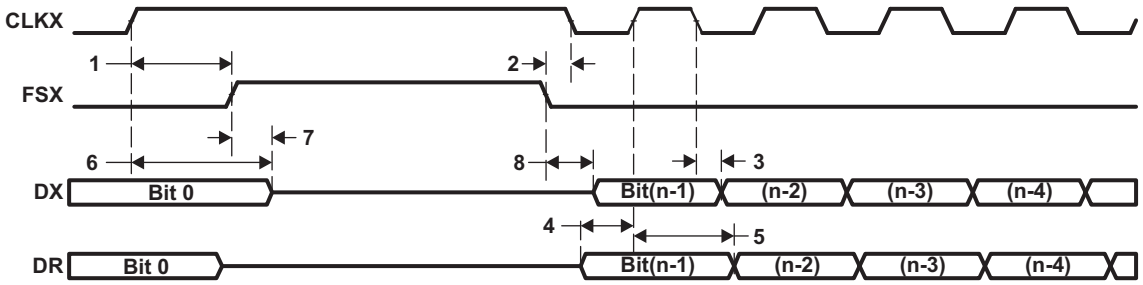

Figure 7-32. McBSP Timing as SPI Master: CLKSTP = 10b, CLKXP = 1

Table 7-53. Timing Requirements for McBSP as SPI Master: CLKSTP = 11b, CLKXP = 1[1]

(see Figure 7-33)

NO.			MASTER		SLAVE		UNIT
			MIN	MAX	MIN	MAX	
4	$t_{su(DRV-CKXH)}$	Setup time, DR valid before CLKX high	12		2 - 18P		ns
5	$t_{h(CKXH-DRV)}$	Hold time, DR valid after CLKX high	4		5 + 36P		ns

(1) P = 1/CPU clock frequency in ns. For example, when running parts at 1000 MHz, use P = 1 ns.

Table 7-54. Switching Characteristics Over Recommended Operating Conditions for McBSP as SPI Master: CLKSTP = 11b, CLKXP = 1[1]

(see Figure 7-33)

NO.	PARAMETER		MASTER[2]		SLAVE		UNIT
			MIN	MAX	MIN	MAX	
1	$t_{h(CKXH-FXL)}$	Hold time, FSX low after CLKX high[3]	H - 2	H + 3			ns
2	$t_{d(FXL-CKXL)}$	Delay time, FSX low to CLKX low[4]	T - 2	T + 1			ns
3	$t_{d(CKXH-DXV)}$	Delay time, CLKX high to DX valid	-2	4	18P + 2.8	30P + 17	ns
6	$t_{dis(CKXH-DXHZ)}$	Disable time, DX high impedance following last data bit from CLKX high	-2	4	18P + 3	30P + 17	ns
7	$t_{d(FXL-DXV)}$	Delay time, FSX low to DX valid	L - 2	L + 4	12P + 2	24P + 17	ns

(1) P = 1/CPU clock frequency in ns. For example, when running parts at 1000 MHz, use P = 1 ns.
(2) S = Sample rate generator input clock = 6P if CLKSM = 1 (P = 1/CPU clock frequency)
S = Sample rate generator input clock = P_clks if CLKSM = 0 (P_clks = CLKS period)
T = CLKX period = (1 + CLKGDV) * S
H = CLKX high pulse width = (CLKGDV/2 + 1) * S if CLKGDV is even
H = (CLKGDV + 1)/2 * S if CLKGDV is odd
L = CLKX low pulse width = (CLKGDV/2) * S if CLKGDV is even
L = (CLKGDV + 1)/2 * S if CLKGDV is odd
(3) FSRP = FSXP = 1. As a SPI Master, FSX is inverted to provide active-low slave-enable output.
CLKXM = FSXM = 1, CLKRM = FSRM = 0 for Master McBSP
(4) FSX should be low before the rising edge of clock to enable Slave devices and then begin a SPI transfer at the rising edge of the Master clock (CLKX).

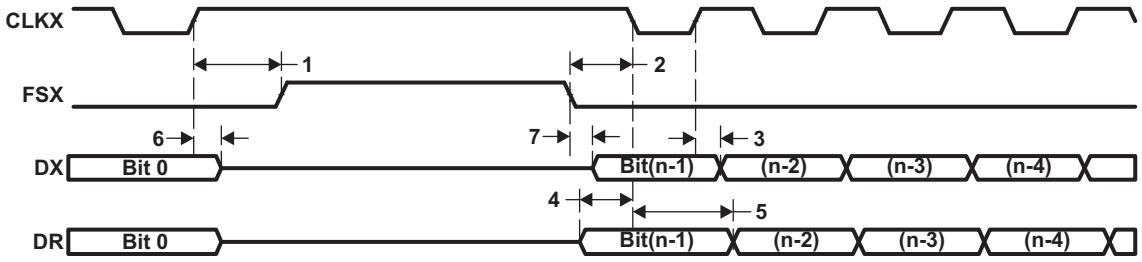

Figure 7-33. McBSP Timing as SPI Master: CLKSTP = 11b, CLKXP = 1

Copyright © 2008–2011, Texas Instruments Incorporated

7.13 Ethernet MAC (EMAC)

The Ethernet Media Access Controller (EMAC) module provides an efficient interface between the C6474 DSP core processor and the networked community. The EMAC supports 1000BaseT (1000 Mbps) in full-duplex mode, with hardware flow control and quality-of-service (QOS) support.

The EMAC module conforms to the IEEE 802.3-2002 standard, describing the “Carrier Sense Multiple Access with Collision Detection (CSMA/CD) Access Method and Physical Layer” specifications. The IEEE 802.3 standard has also been adopted by ISO/IEC and re-designated as ISO/IEC 8802-3:2000(E).

Deviation from this standard, the EMAC module does not use the Transmit Coding Error signal MTXER. Instead of driving the error pin when an underflow condition occurs on a transmitted frame, the EMAC will intentionally generate an incorrect checksum by inverting the frame CRC, so that the transmitted frame will be detected as an error by the network.

The EMAC control module is the main interface between the device core processor, the MDIO module, and the EMAC module. The relationship between these three components is shown in Figure 7-34. The EMAC control module contains the necessary components to allow the EMAC to make efficient use of device memory, plus it controls device interrupts. The EMAC control module incorporates 8K-bytes of internal RAM to hold EMAC buffer descriptors.

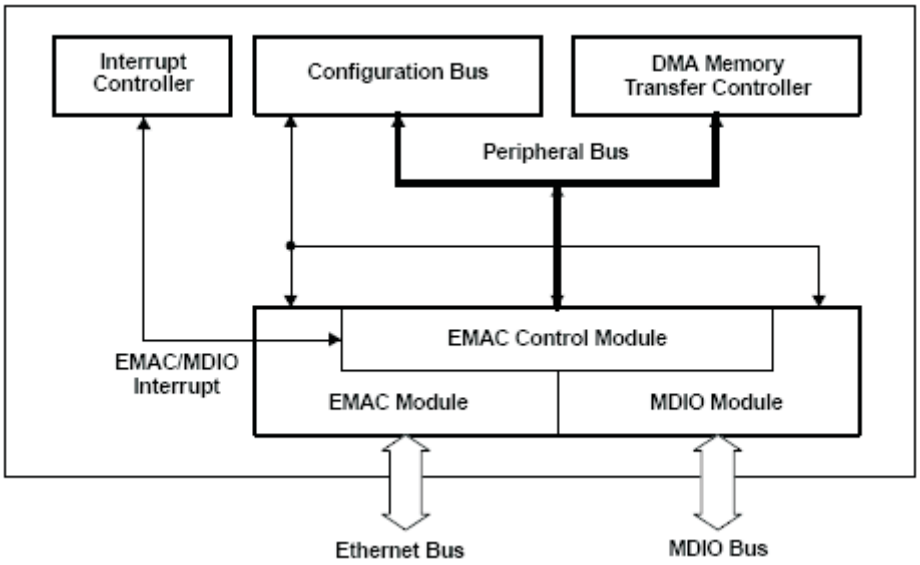

Figure 7-34. EMAC, MDIO, and EMAC Control Modules

For more detailed information on the EMAC/MDIO, see the *TMS320C6474 DSP EMAC/MDIO Module Reference Guide* (literature number SPRUG08).

7.13.1 EMAC Device-Specific Information

The EMAC module on the device supports Serial Gigabit Media Independent Interface (SGMII). The SGMII interface conforms to version 1.8 of the industry standard specification.

7.13.2 EMAC Peripheral Register Descriptions

The memory maps of the EMAC are shown in Table 7-55 to Table 7-57.

Table 7-55. Ethernet MAC (EMAC) Control Registers

HEX ADDRESS	ACRONYM	REGISTER NAME
02C8 0000	TXIDVER	Transmit Identification and Version Register
02C8 0004	TXCONTROL	Transmit Control Register
02C8 0008	TXTEARDOWN	Transmit Teardown register
02C8 000F	-	Reserved
02C8 0010	RXIDVER	Receive Identification and Version Register
02C8 0014	RXCONTROL	Receive Control Register
02C8 0018	RXTEARDOWN	Receive Teardown Register
02C8 001C	-	Reserved
02C8 0020 - 02C8 007C	-	Reserved
02C8 0080	TXINTSTATRAW	Transmit Interrupt Status (Unmasked) Register
02C8 0084	TXINTSTATMASKED	Transmit Interrupt Status (Masked) Register
02C8 0088	TXINTMASKSET	Transmit Interrupt Mask Set Register
02C8 008C	TXINTMASKCLEAR	Transmit Interrupt Mask Clear Register
02C8 0090	MACINVECTOR	MAC Input Vector Register
02C8 0094	MACE0IVECTOR	MAC End of Interrupt Vector Register
02C8 0098 - 02C8 019C	-	Reserved
02C8 00A0	RXINTSTATRAW	Receive Interrupt Status (Unmasked) Register
02C8 00A4	RXINTSTATMASKED	Receive Interrupt Status (Masked) Register
02C8 00A8	RXINTMASKSET	Receive Interrupt Mask Set Register
02C8 00AC	RXINTMASKCLEAR	Receive Interrupt Mask Clear Register
02C8 00B0	MACINTSTATRAW	MAC Interrupt Status (Unmasked) Register
02C8 00B4	MACINTSTATMASKED	MAC Interrupt Status (Masked) Register
02C8 00B8	MACINTMASKSET	MAC Interrupt Mask Set Register
02C8 00BC	MACINTMASKCLEAR	MAC Interrupt Mask Clear Register
02C8 00C0 - 02C8 00FC	-	Reserved
02C8 0100	RXMBPENABLE	Receive Multicast/Broadcast/Promiscuous Channel Enable Register
02C8 0104	RXUNICASTSET	Receive Unicast Enable Set Register
02C8 0108	RXUNICASTCLEAR	Receive Unicast Clear Register
02C8 010C	RXMAXLEN	Receive Maximum Length Register
02C8 0110	RXBUFFEROFFSET	Receive Buffer Offset Register
02C8 0114	RXFILTERLOWTHRESH	Receive Filter Low Priority Frame Threshold Register
02C8 0118 - 02C8 011C	-	Reserved
02C8 0120	RX0FLOWTHRESH	Receive Channel 0 Flow Control Threshold Register
02C8 0124	RX1FLOWTHRESH	Receive Channel 1 Flow Control Threshold Register
02C8 0128	RX2FLOWTHRESH	Receive Channel 2 Flow Control Threshold Register
02C8 012C	RX3FLOWTHRESH	Receive Channel 3 Flow Control Threshold Register
02C8 0130	RX4FLOWTHRESH	Receive Channel 4 Flow Control Threshold Register
02C8 0134	RX5FLOWTHRESH	Receive Channel 5 Flow Control Threshold Register
02C8 0138	RX6FLOWTHRESH	Receive Channel 6 Flow Control Threshold Register
02C8 013C	RX7FLOWTHRESH	Receive Channel 7 Flow Control Threshold Register
02C8 0140	RX0FREEBUFFER	Receive Channel 0 Free Buffer Count Register
02C8 0144	RX1FREEBUFFER	Receive Channel 1 Free Buffer Count Register
02C8 0148	RX2FREEBUFFER	Receive Channel 2 Free Buffer Count Register
02C8 014C	RX3FREEBUFFER	Receive Channel 3 Free Buffer Count Register

Copyright © 2008–2011, Texas Instruments Incorporated

Table 7-55. Ethernet MAC (EMAC) Control Registers (continued)

HEX ADDRESS	ACRONYM	REGISTER NAME
02C8 0150	RX4FREEBUFFER	Receive Channel 4 Free Buffer Count Register
02C8 0154	RX5FREEBUFFER	Receive Channel 5 Free Buffer Count Register
02C8 0158	RX6FREEBUFFER	Receive Channel 6 Free Buffer Count Register
02C8 015C	RX7FREEBUFFER	Receive Channel 7 Free Buffer Count Register
02C8 0160	MACCONTROL	MAC Control Register
02C8 0164	MACSTATUS	MAC Status Register
02C8 0168	EMCONTROL	Emulation Control Register
02C8 016C	FIFCONTROL	FIFO Control Register (Transmit and Receive)
02C8 0170	MACCONFIG	MAC Configuration Register
02C8 0174	SOFTRESET	Soft Reset Register
02C8 0178 - 02C8 01CC	-	Reserved
02C8 01D0	MACSRCADDRLO	MAC Source Address Low Bytes Register (Lower 32-bits)
02C8 01D4	MACSRCADDRHI	MAC Source Address High Bytes Register (Upper 32-bits)
02C8 01D8	MACHASH1	MAC Hash Address Register 1
02C8 01DC	MACHASH2	MAC Hash Address Register 2
02C8 01E0	BOFFTEST	Back Off Test Register
02C8 01E4	TRACETEST	Transmit Pacing Algorithm Test Register
02C8 01E8	RXPAUSE	Receive Pause Timer Register
02C8 01EC	TXPAUSE	Transmit Pause Timer Register
02C8 01F0 - 02C8 01FC	-	Reserved
02C8 0200	RXGOODFRAMES	Good Receive Frames Register
02C8 0204	RXBCASTFRAMES	Broadcast Receive Frames Register
02C8 0208	RXMCASTFRAMES	Multicast Receive Frames Register
02C8 020C	RXPAUSEFRAMES	Pause Receive Frames Register
02C8 0210	RXCRCERRORS	Receive CRC Errors Register
02C8 0214	RXALIGNCODEERRORS	Receive Alignment/Code Errors Register
02C8 0218	RXOVERSIZED	Receive Oversized Frames Register
02C8 021C	RXJABBER	Receive Jabber Frames Register02C80220
02C8 0220	RXUNDERSIZED	Receive Undersized Frames Register
02C8 0224	RXFRAGMENTS	Receive Frame Fragments Register
02C8 0228	RXFILTERED	Filtered Receive Frames Register
02C8 022C	RXQOSFILTERED	Receive QOS Filtered Frames Register
02C8 0230	RXOCTETS	Receive Octet Frames Register
02C8 0234	TXGOODFRAMES	Good Transmit Frames Register
02C8 0238	TXBCASTFRAMES	Broadcast Transmit Frames Register
02C8 023C	TXMCASTFRAMES	Multicast Transmit Frames Register
02C8 0240	TXPAUSEFRAMES	Pause Transmit Frames Register
02C8 0244	TXDEFERRED	Deferred Transmit Frames Register
02C8 0248	TXCOLLISION	Transmit Collision Frames Register
02C8 024C	TXSINGLECOLL	Transmit Single Collision Frames Register
02C8 0250	TXMULTICOLL	Transmit Multiple Collision Frames Register
02C8 0254	TXEXCESSIVECOLL	Transmit Excessive Collision Frames Register
02C8 0258	TXLATECOLL	Transmit Late Collision Frames Register
02C8 025C	TXUNDERRUN	Transmit Underrun Error Register
02C8 0260	TXCARRIERSENSE	Transmit Carrier Sense Errors Register
02C8 0264	TXOCTETS	Transmit Octet Frames Register
02C8 0268	FRAME64	Transmit and Receive 64 Octet Frames Register

Copyright © 2008–2011, Texas Instruments Incorporated

Table 7-55. Ethernet MAC (EMAC) Control Registers (continued)

HEX ADDRESS	ACRONYM	REGISTER NAME
02C8 026C	FRAME65T127	Transmit and Receive 65 to 127 Octet Frames Register
02C8 0270	FRAME128T255	Transmit and Receive 128 to 255 Octet Frames Register
02C8 0274	FRAME256T511	Transmit and Receive 256 to 511 Octet Frames Register
02C8 0278	FRAME512T1023	Transmit and Receive 512 to 1023 Octet Frames Register
02C8 027C	FRAME1024TUP	Transmit and Receive 1024 to 1518 Octet Frames Register
02C8 0280	NETOCTETS	Network Octet Frames Register
02C8 0284	RXSOFOVERRUNS	Receive FIFO or DMA Start of Frame Overruns Register
02C8 0288	RXMOFOVERRUNS	Receive FIFO or DMA Middle of Frame Overruns Register
02C8 028C	RXDMAOVERRUNS	Receive DMA Start of Frame and Middle of Frame Overruns Register
02C8 0300 - 02C8 03FC	-	Reserved
02C8 0400 - 02C8 04FC	-	Reserved
02C8 0500	MACADDRLO	MAC Address Low Bytes Register (used in Receive Address Matching)
02C8 0504	MACADDRHI	MAC Address High Bytes Register (used in Receive Address Matching)
02C8 0508	MACINDEX	MAC Index Register
02C8 050C - 02C8 05FC	-	Reserved
02C8 0600	TX0HDP	Transmit Channel 0 DMA Head Descriptor Pointer Register
02C8 0604	TX1HDP	Transmit Channel 1 DMA Head Descriptor Pointer Register
02C8 0608	TX2HDP	Transmit Channel 2 DMA Head Descriptor Pointer Register
02C8 060C	TX3HDP	Transmit Channel 3 DMA Head Descriptor Pointer Register
02C8 0610	TX4HDP	Transmit Channel 4 DMA Head Descriptor Pointer Register
02C8 0614	TX5HDP	Transmit Channel 5 DMA Head Descriptor Pointer Register
02C8 0618	TX6HDP	Transmit Channel 6 DMA Head Descriptor Pointer Register
02C8 061C	TX7HDP	Transmit Channel 7 DMA Head Descriptor Pointer Register
02C8 0620	RX0HDP	Receive Channel 0 DMA Head Descriptor Pointer Register
02C8 0624	RX1HDP	Receive t Channel 1 DMA Head Descriptor Pointer Register
02C8 0628	RX2HDP	Receive Channel 2 DMA Head Descriptor Pointer Register
02C8 062C	RX3HDP	Receive t Channel 3 DMA Head Descriptor Pointer Register
02C8 0630	RX4HDP	Receive Channel 4 DMA Head Descriptor Pointer Register
02C8 0634	RX5HDP	Receive t Channel 5 DMA Head Descriptor Pointer Register
02C8 0638	RX6HDP	Receive Channel 6 DMA Head Descriptor Pointer Register
02C8 063C	RX7HDP	Receive t Channel 7 DMA Head Descriptor Pointer Register
02C8 0640	TX0CP	Transmit Channel 0 Completion Pointer (Interrupt Acknowledge) Register
02C8 0644	TX1CP	Transmit Channel 1 Completion Pointer (Interrupt Acknowledge) Register
02C8 0648	TX2CP	Transmit Channel 2 Completion Pointer (Interrupt Acknowledge) Register
02C8 064C	TX3CP	Transmit Channel 3 Completion Pointer (Interrupt Acknowledge) Register
02C8 0650	TX4CP	Transmit Channel 4 Completion Pointer (Interrupt Acknowledge) Register
02C8 0654	TX5CP	Transmit Channel 5 Completion Pointer (Interrupt Acknowledge) Register
02C8 0658	TX6CP	Transmit Channel 6 Completion Pointer (Interrupt Acknowledge) Register
02C8 065C	TX7CP	Transmit Channel 7 Completion Pointer (Interrupt Acknowledge) Register

Copyright © 2008–2011, Texas Instruments Incorporated

Table 7-55. Ethernet MAC (EMAC) Control Registers (continued)

HEX ADDRESS	ACRONYM	REGISTER NAME
02C8 0660	RX0CP	Receive Channel 0 Completion Pointer (Interrupt Acknowledge) Register
02C8 0664	RX1CP	Receive Channel 1 Completion Pointer (Interrupt Acknowledge) Register
02C8 0668	RX2CP	Receive Channel 2 Completion Pointer (Interrupt Acknowledge) Register
02C8 066C	RX3CP	Receive Channel 3 Completion Pointer (Interrupt Acknowledge) Register
02C8 0670	RX4CP	Receive Channel 4 Completion Pointer (Interrupt Acknowledge) Register
02C8 0674	RX5CP	Receive Channel 5 Completion Pointer (Interrupt Acknowledge) Register
02C8 0678	RX6CP	Receive Channel 6 Completion Pointer (Interrupt Acknowledge) Register
02C8 067C	RX7CP	Receive Channel 7 Completion Pointer (Interrupt Acknowledge) Register
02C8 0680 - 02C8 06FC	-	Reserved
02C8 0700 - 02C8 077C	-	Reserved
02C8 0780 - 02C8 0FFF	-	Reserved

Table 7-56. EMAC Statistics Registers

HEX ADDRESS	ACRONYM	REGISTER NAME
02C8 0200	RXGOODFRAMES	Good Receive Frames Register
02C8 0204	RXBCASTFRAMES	Broadcast Receive Frames Register (Total number of Good Broadcast Frames Receive)
02C8 0208	RXMCASTFRAMES	Multicast Receive Frames Register (Total number of Good Multicast Frames Received)
02C8 020C	RXPAUSEFRAMES	Pause Receive Frames Register
02C8 0210	RXCRCERRORS	Receive CRC Errors Register (Total number of Frames Received with CRC Errors)
02C8 0214	RXALIGNCODEERRORS	Receive Alignment/Code Errors register (Total number of frames Received with alignment/code errors)
02C8 0218	RXOVERSIZED	Receive Oversized Frames Register (Total number of Oversized Frames Received)
02C8 021C	RXJABBER	Receive Jabber Frames Register (Total number of Jabber Frames Received)
02C8 0220	RXUNDERSIZED	Receive Undersized Frames Register (Total number of Undersized Frames Received)
02C8 0224	RXFRAGMENTS	Receive Frame Fragments Register
02C8 0228	RXFILTERED	Filtered Receive Frames Register
02C8 022C	RXQOSFILTERERED	Received QOS Filtered Frames Register
02C8 0230	RXOCTETS	Receive Octet Frames Register (Total number of Received Bytes in Good Frames)
02C8 0234	TXGOODFRAMES	Good Transmit Frames Register (Total number of Good Frames Transmitted)
02C8 0238	TXBCASTFRAMES	Broadcast Transmit Frames Register
02C8 023C	TXMCASTFRAMES	Multicast Transmit Frames Register
02C8 0240	TXPAUSEFRAMES	Pause Transmit Frames Register
02C8 0244	TXDEFERED	Deferred Transmit Frames Register
02C8 0248	TXCOLLISION	Transmit Collision Frames Register
02C8 024C	TXSINGLECOLL	Transmit Single Collision Frames Register
02C8 0250	TXMULTICOLL	Transmit Multiple Collision Frames Register

Copyright © 2008–2011, Texas Instruments Incorporated

Table 7-56. EMAC Statistics Registers (continued)

HEX ADDRESS	ACRONYM	REGISTER NAME
02C8 0254	TXEXCESSIVECOLL	Transmit Excessive Collision Frames Register
02C8 0258	TXLATECOLL	Transmit Late Collision Frames Register
02C8 025C	TXUNDERRUN	Transmit Under Run Error Register
02C8 0260	TXCARRIERSENSE	Transmit Carrier Sense Errors Register
02C8 0264	TXOCTETS	Transmit Octet Frames Register
02C8 0268	FRAME64	Transmit and Receive 64 Octet Frames Register
02C8 026C	FRAME65T127	Transmit and Receive 65 to 127 Octet Frames Register
02C8 0270	FRAME128T255	Transmit and Receive 128 to 255 Octet Frames Register
02C8 0274	FRAME256T511	Transmit and Receive 256 to 511 Octet Frames Register
02C8 0278	FRAME512T1023	Transmit and Receive 512 to 1023 Octet Frames Register
02C8 027C	FRAME1024TUP	Transmit and Receive 1024 to 1518 Octet Frames Register
02C8 0280	NETOCTETS	Network Octet Frames Register
02C8 0284	RXSOFOVERRUNS	Receive FIFO or DMA Start of Frame Overruns Register
02C8 0288	RXMOFOVERRUNS	Receive FIFO or DMA Middle of Frame Overruns Register
02C8 028C	RXDMAOVERRUNS	Receive DMA Start of Frame and Middle of Frame Overruns Register
02C8 0290 - 02C8 02FC	-	Reserved

Table 7-57. EMAC Descriptor Memory

HEX ADDRESS	ACRONYM	REGISTER NAME
02C8 2000 - 02C8 3FFF	-	EMAC Descriptor Memory

Table 7-58. SGMII Control Registers

HEX ADDRESS	ACRONYM	REGISTER NAME
02C4 0000	IDVER	Identification and Version Register
02C4 0004	SOFT_RESET	Software Reset Register
02C4 0010	CONTROL	Control Register
02C4 0014	STATUS	Status Register
02C4 0018	MR_ADV_ABILITY	Advertised Ability Register
02C4 001C	-	Reserved
02C4 0020	MR_LP_ADV_ABILITY	Link Partner Advertised Ability Register
02C4 0024	-	Reserved
02C4 0030	TX_CFG	Transmit Configuration Register
02C4 0034	RX_CFG	Receive Configuration Register
02C4 0038	AUX_CFG	Auxiliary Configuration Register
02C4 0040 - 02C4 0048	-	Reserved

Table 7-59. EMAC Interrupt Control (EMIC) Registers

HEX ADDRESS	ACRONYM	REGISTER NAME
02C8 1000	IDVER	Identification and Version Register
02C8 1004	SOFT_RESET	Software Reset Register
02C8 1008	EM_CONTROL	Emulation Control Register
02C8 100C	INT_CONTROL	Interrupt Control Register
02C8 1010	C0_RX_THREST_EN	Core 0 Receive Threshold Interrupt Enable Register
02C8 1014	C0_RX_EN	Core 0 Receive Interrupt Enable Register
02C8 1018	C0_TX_EN	Core 0 Transmit Interrupt Enable Register

Copyright © 2008–2011, Texas Instruments Incorporated

Table 7-59. EMAC Interrupt Control (EMIC) Registers (continued)

HEX ADDRESS	ACRONYM	REGISTER NAME
02C8 101C	C0_MISC_EN	Core 0 Miscellaneous Interrupt Enable Register
02C8 1020	C1_RX_THRESH_EN	Core 1 Receive Threshold Interrupt Enable Register
02C8 1024	C1_RX_EN	Core 1 Receive Interrupt Enable Register
02C8 1028	C1_RX_EN	Core 1 Transmit Interrupt Enable Register
02C8 102C	C1_MISC_EN	Core 1 Miscellaneous Interrupt Enable Register
02C8 1030	C2_RX_THRESH_EN	Core 2 Receive Threshold Interrupt Enable Register
02C8 1034	C2_RX_EN	Core 2 Receive Interrupt Enable Register
02C8 1038	C2_RX_EN	Core 2 Transmit Interrupt Enable Register
02C8 103C	C2_MISC_EN	Core 2 Miscellaneous Interrupt Enable Register
02C8 1040	C0_RX_THRESH_STAT	Core 0 Receive Threshold Masked Interrupt Status Register
02C8 1044	C0_RX_STAT	Core 0 Receive Interrupt Masked Interrupt Status Register
02C8 1048	C0_TX_STAT	Core 0 Transmit Interrupt Masked Interrupt Status Register
02C8 104C	C0_MISC_STAT	Core 0 Miscellaneous Interrupt Masked Interrupt Status Register
02C8 1050	C1_RX_THRESH_STAT	Core 1 Receive Threshold Masked Interrupt Status Register
02C8 1054	C1_RX_STAT	Core 1 Receive Masked Interrupt Status Register
02C8 1058	C1_TX_STAT	Core 1 Transmit Masked Interrupt Status Register
02C8 105C	C1_MISC_STAT	Core 1 Miscellaneous Masked Interrupt Status Register
02C8 1060	C2_RX_THRESH_STAT	Core 2 Receive Threshold Masked Interrupt Status Register
02C8 1064	C2_RX_STAT	Core 2 Receive Masked Interrupt Status Register
02C8 1068	C2_TX_STAT	Core 2 Transmit Masked Interrupt Status Register
02C8 106C	C2_MISC_STAT	Core 2 Miscellaneous Masked Interrupt Status Register
02C8 1070	C0_RX_IMAX	Core 0 Receive Interrupts Per Millisecond
02C8 1074	C0_TX_IMAX	Core 0 Transmit Interrupts Per Millisecond
02C8 1078	C1_RX_IMAX	Core 1 Receive Interrupts Per Millisecond
02C8 107C	C1_TX_IMAX	Core 1 Transmit Interrupts Per Millisecond
02C8 1080	C2_RX_IMAX	Core 2 Receive Interrupts Per Millisecond
02C8 1084	C2_TX_IMAX	Core 2 Transmit Interrupts Per Millisecond

Copyright © 2008–2011, Texas Instruments Incorporated

7.13.3 EMAC Electrical Data/Timing (SGMII)

The *TMS320C6474 Hardware Design Guide* application report (literature number SPRAAW7) specifies a complete EMAC anc SGMII interface solutions for the C6474 device as well as a list of compatible EMAC and SGMII devices. TI has performed the simulation and system characterization to ensure all EMAC and SGMII interface timings in this solution are met.

TI *only* supports designs that follow the board design guidelines outlined in the SPRAAW7 application report.

Table 7-60. Timing Requirements for SRIOSGMIIREFCLK(N|P)(1)

(see Figure 7-35)

NO.	PARAMETERS		MIN	MAX	UNIT
1	$t_{c(SRIOSGMIIREFCLK)}$	Cycle time, SRIOSGMIIREFCLK(N|P)	3.2	8	ns
2	$t_{w(CLKH)}$	Pulse duration, CLK(N|P) high	0.4C		ns
3	$t_{w(CLKL)}$	Pulse duration, CLK(N|P) low	0.4C		ns
4	$t_{t(CLK)}$	Transition time, CLK(N|P)	50	1300	ps
5	$t_{j(CLK)}$	Period Jitter (RMS), CLK(N|P)		4	ps

(1) C=1/SRIOSGMIIREFCLK(N|P)

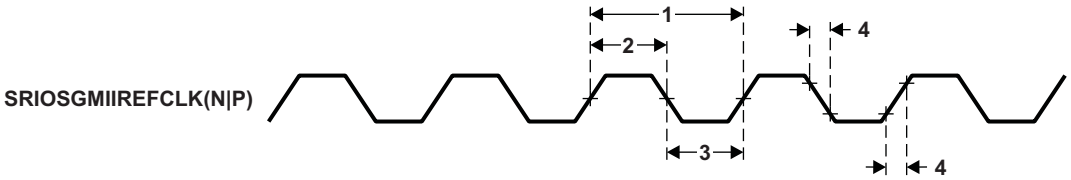

Figure 7-35. SRIOSGMIIREFCLK(N|P) Timing

Copyright © 2008–2011, Texas Instruments Incorporated

7.14 Management Data Input/Output (MDIO)

The Management Data Input/Output (MDIO) module implements the 802.3 serial management interface to interrogate and controls up to 32 Ethernet PHY(s) connected to the device, using a shared two-wire bus. Application software uses the MDIO module to configure the auto-negotiation parameters of each PHY attached to the EMAC, retrieve the negotiation results, and configure required parameters in the EMAC module for correct operation. The module is designed to allow almost transparent operation of the MDIO interface, with very little maintenance from the core processor.

The EMAC control module is the main interface between the device core processor, the MDIO module, and the EMAC module. The relationship between these three components is shown in Figure 7-34.

For more detailed information on the EMAC/MDIO, see the *TMS320C6474 DSP EMAC/MDIO Module Reference Guide* (literature number SPRUG08).

7.14.1 MDIO Peripheral Register Description(s)

The memory map of the MDIO is shown in Table 7-61.

Table 7-61. MDIO Registers

HEX ADDRESS	ACRONYM	REGISTER NAME
02C8 1800	VERSION	MDIO Version Register
02C8 1804	CONTROL	MDIO Control Register
02C8 1808	ALIVE	MDIO PHY Alive Status Register
02C8 180C	LINK	MDIO PHY Link Status Register
02C8 1810	LINKINTRAW	MDIO link Status Change Interrupt (unmasked) Register
02C8 1814	LINKINTMASKED	MDIO link Status Change Interrupt (masked) Register
02C8 1818 - 02C8 181C	-	Reserved
02C8 1820	USERINTRAW	MDIO User Command Complete Interrupt (Unmasked) Register
02C8 1824	USERINTMASKED	MDIO User Command Complete Interrupt (Masked) Register
02C8 1828	USERINTMASKSET	MDIO User Command Complete Interrupt Mask Set Register
02C8 182C	USERINTMASKCLEAR	MDIO User Command Complete Interrupt Mask Clear Register
02C8 1830 - 02C8 187C	-	Reserved
02C8 1880	USERACCESS0	MDIO User Access Register 0
02C8 1884	USERPHYSEL0	MDIO User PHY Select Register 0
02C8 1888	USERACCESS1	MDIO User Access Register 1
02C8 188C	USERPHYSEL1	MDIO User PHY Select Register 1
02C8 1890 - 02C8 1FFF	-	Reserved

Copyright © 2008–2011, Texas Instruments Incorporated

7.14.2 MDIO Electrical Data/Timing

Table 7-62. Timing Requirements for MDIO Inputs

(see Figure 7-36)

NO.			MIN	MAX	UNIT
1	$t_{c(MDCLK)}$	Cycle time, MDCLK	400		ns
2a	$t_{w(MDCLK)}$	Pulse duration, MDCLK high	180		ns
2b	$t_{w(MDCLK)}$	Pulse duration, MDCLK low	180		ns
3	$t_{t(MDCLK)}$	Transition time, MDCLK		5	ns
4	$t_{su(MDIO-MDCLKH)}$	Setup time, MDIO data input valid before MDCLK high	10		ns
5	$t_{h(MDCLKH-MDIO)}$	Hold time, MDIO data input valid after MDCLK high	10		ns

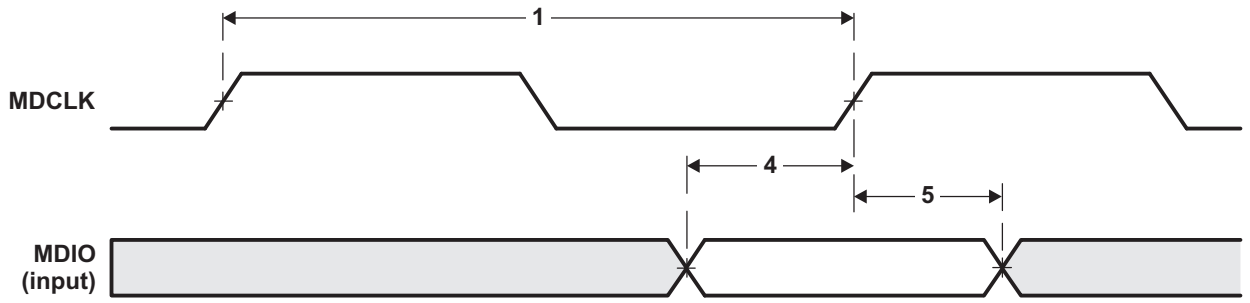

Figure 7-36. MDIO Input Timing

Table 7-63. Switching Characteristics Over Recommended Operating Conditions for MDIO Outputs

(see Figure 7-37)

NO.			MIN	MAX	UNIT
7	$t_{d(MDCLKL-MDIO)}$	Delay time, MDCLK low to MDIO data output valid		100	ns

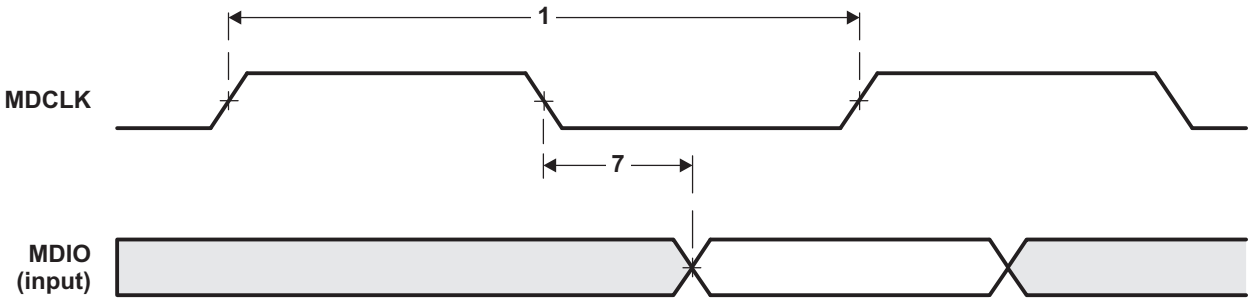

Figure 7-37. MDIO Output Timing

Copyright © 2008–2011, Texas Instruments Incorporated

7.15 Timers

The timers can be used to: time events, count events, generate pulses, interrupt the CPU, and send synchronization event so the EDMA3 channel controller.

7.15.1 Timers Device-Specific Information

The device has six general purpose timers: Timer0 to Timer5, each of which can be configured as a general purpose timer or a watchdog timer. When configured as a general-purpose timer, each timer can be programmed as a 64-bit timer or as two separate 32-bit timers.

Each timer is made up of two 32-bit counters: a high counter and a low counter. The timer pinout is described in the next section.

7.15.1.1 Timer I/O Selection

Not all timer inputs and outputs are pinned out of the device. The six timers have a flexible (e.g. software controlled) selection of timer inputs and outputs. At the chip level there are four timer pins, two input pins (TIMI[1:0]) and two output pins (TIMO[1:0]). Each timer input can be configured to be driven by either of the timer input pins, or by an FSYNC event (FSEVT[3:2]). Each output pin can be driven by any of the timer outputs. This is programmable through software via the Timer Pin Manager Block, as shown in the Figure 7-38. Not shown in the figure is the logic that gates the timer resets that are routed to the PLL controller, shown in Figure 7-39.

Copyright © 2008–2011, Texas Instruments Incorporated

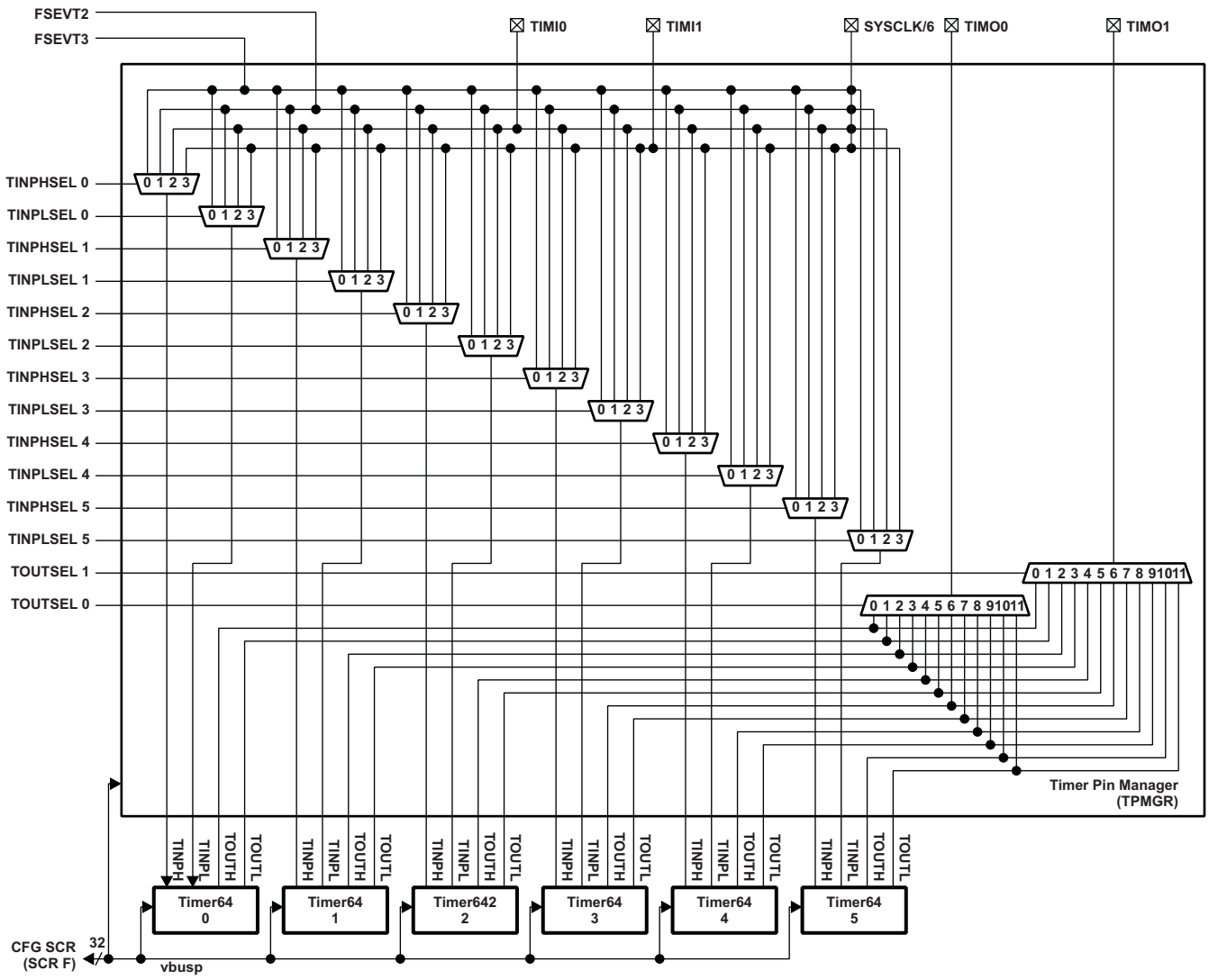

Figure 7-38. Timer Manager Block Diagram

Note that the *TMS320C6474 DSP 64-Bit Timer User's Guide* (literature number SPRUG18) uses different labels for its inputs and outputs. To avoid confusion with respect to numbering, a different convention is used in this document, as shown in Table 7-64.

Table 7-64. Timer Pin Naming

TIMER	SIGNAL NAME	RENAMED TO	DESCRIPTION
n	TINP12	TINPLn	Timer n input event (low half). Used to drive lower 32-bit timer, 64-bit timer. Used in watchdog mode.
n	TINP34	TINPHn	Timer n input event (high half). Used to drive upper 32-bit timer. Unused in 64-bit or watchdog modes.
n	TOUT12	TOUTLn	Timer n output (low half). Driven by lower 32-bit timer, 64-bit timer, or watchdog timer as either a pulse or waveform.
n	TOUT34	TOUTHn	Timer n output (high half). Driven by upper 32-bit timer as either a pulse or waveform. Unused in 64-bit or watchdog modes.

7.15.1.1.1 Timer Input Selection Register (TINPSEL)

Timer input selection is handled in the Timer input selection register (TINPSEL). The TINPSEL register is shown in Figure 7-39 and described in Table 7-65.

Copyright © 2008–2011, Texas Instruments Incorporated

31	24	23	22	21	20	19	18	17	16
Reserved		TINPHSEL5		TINPLSEL5		TINPHSEL4		TINPLSEL4	
R-00000000		R/W-01		R/W-00		R/W-01		R/W-00	

15	14	13	12	11	10	9	8	7	6	5	4	3	2	1	0
TINPHSEL3		TINPLSEL3		TINPHSEL2		TINPLSEL2		TINPHSEL1		TINPLSEL1		TINPHSEL0		TINPLSEL0	
R/W-01		R/W-00		R/W-01		R/W-00		R/W-01		R/W-00		R/W-01		R/W-00	

LEGEND: R/W = Read/Write; R = Read only; -*n* = value after reset

Figure 7-39. Timer Input Selection Register (TINPSEL)

Table 7-65. Timer Input Selection Register (TINPSEL) Field Descriptions

Bit	Field	Value	Description
31-24	Reserved		Reserved
23:22	TINPHSEL5		Input Select for TIMER 5 High
		00	TIMI0
		01	TIMI1
		10	FSEVT2
		11	FSEVT3
21:20	TINPLSEL5		Input Select for TIMER 5 Low
		00	TIMI0
		01	TIMI1
		10	FSEVT2
		11	FSEVT3
19:18	TINPHSEL4		Input Select for TIMER 4 High
		00	TIMI0
		01	TIMI1
		10	FSEVT2
		11	FSEVT3
17:16	TINPLSEL4		Input Select for TIMER 4 Low
		00	TIMI0
		01	TIMI1
		10	FSEVT2
		11	FSEVT3
15:14	TINPHSEL3		Input Select for TIMER 3 High
		00	TIMI0
		01	TIMI1
		10	FSEVT2
		11	FSEVT3
13:12	TINPLSEL3		Input Select for TIMER 3 Low
		00	TIMI0
		01	TIMI1
		10	FSEVT2
		11	FSEVT3
11:10	TINPHSEL2		Input Select for TIMER 2 High
		00	TIMI0
		01	TIMI1
		10	FSEVT2
		11	FSEVT3

Copyright © 2008–2011, Texas Instruments Incorporated

Table 7-65. Timer Input Selection Register (TINPSEL) Field Descriptions (continued)

Bit	Field	Value	Description
9:8	TINPLSEL2		Input Select for TIMER 2 Low
		00	TIMI0
		01	TIMI1
		10	FSEVT2
		11	FSEVT3
7:6	TINPHSEL1		Input Select for TIMER 1 High
		00	TIMI0
		01	TIMI1
		10	FSEVT2
		11	FSEVT3
5:4	TINPLSEL1		Input Select for TIMER 1 Low
		00	TIMI0
		01	TIMI1
		10	FSEVT2
		11	FSEVT3
3:2	TINPHSEL0		Input Select for TIMER 0 High
		00	TIMI0
		01	TIMI1
		10	FSEVT2
		11	FSEVT3
1:0	TINPLSEL0		Input Select for TIMER 0 Low
		00	TIMI0
		01	TIMI1
		10	FSEVT2
		11	FSEVT3

Copyright © 2008–2011, Texas Instruments Incorporated

7.15.1.1.2 Timer Output Selection Register (TOUTPSEL)

The timer output selection is handled in the Timer output selection register (TOUTPSEL). The TOUTPSEL register is shown in Figure 7-40 and described in Table 7-66.

31	16
Reserved	
R-00000000000000000000000000	

15	8	7	4	3	0
Reserved		TOUTPSEL1		TOUTPSEL0	
R-00000000000000000000000000		R/W-0001		R/W-0000	

LEGEND: R/W = Read/Write; R = Read only; -*n* = value after reset

Figure 7-40. Timer Output Selection Register (TOUTPSEL)

Table 7-66. Timer Output Selection Register (TOUTPSEL) Field Descriptions

Bit	Field	Value	Description
31:8	Reserved		Reserved
7:4	TOUTPSEL1		Output Select for TIMI1
		0000	TOUTL0
		0001	TOUTH0
		0010	TOUTL1
		0011	TOUTH1
		0100	TOUTL2
		0101	TOUTH2
		0110	TOUTL3
		0111	TOUTH3
		1000	TOUTL4
		1001	TOUTH5
		1010	TOUTL5
		1011	TOUTH5
		Other	Reserved
3:0	TOUTPSEL0		Output Select for TIMO0
		0000	TOUTL0
		0001	TOUTH0
		0010	TOUTL1
		0011	TOUTH1
		0100	TOUTL2
		0101	TOUTH2
		0110	TOUTL3
		0111	TOUTH3
		1000	TOUTL4
		1001	TOUTH5
		1010	TOUTL5
		1011	TOUTH5
		Other	Reserved

Copyright © 2008–2011, Texas Instruments Incorporated

7.15.1.2 Timer Watchdog Select

As mentioned previously, the timers can operate in watchdog mode. When in watchdog mode, the event output from the timer can optionally reset the CPU. When used in this type of mode, Timer3, Timer4, and Timer 5 correspond to C64x+ Megamodule Core 0, C64x+ Megamodule Core 1, and C64x+ Megamodule Core 2, respectively. In order for the event not to trigger the reset when this operation is not desired, the Timer watchdog reset selection register (WDRSTSEL) is created to turn this feature on/off. The WDRSTSEL register is shown in Figure 7-41 and described in Table 7-67.

31	8
Reserved	
R-0 0000 0000 0000 0000 0000 0000 0000	

7	3	2	1	0
Reserved		WDRSTSEL5	WDRSTSEL4	WDRSTSEL3
R-0 0000 0000 0000 0000 0000 0000 0000		R/W-0	R/W-0	R/W-0

LEGEND: R/W = Read/Write; R = Read only; -*n* = value after reset

Figure 7-41. Timer Watchdog Reset Selection Register (WDRSTSEL)

Table 7-67. Timer Watchdog Reset Selection Register (WDRSTSEL) Field Descriptions

Bit	Field	Value	Description
31:3	Reserved		Reserved
2:2	WRDSTSEL*n*		Reset Select for Watchdog Timer
		0	TOUT*n*L does not cause WDRSTSEL to assert to the corresponding C64x+ megamodule
		1	TOUT*n*L causes a reset of the corresponding C64x+ megamodule via the host reset port of the LPSC

7.15.2 Timers Peripheral Description(s)

Table 7-68. Timer 0 Registers

HEX ADDRESS	ACRONYM	REGISTER NAME
0291 0000	PID	Peripheral ID Register
0291 0004	EMUMGT_CLKSPD	Timer 0 Emulation Management/Clock Speed Register
0291 0008	-	Reserved
0291 000C	-	Reserved
0291 0010	TIMLO	Timer 0 Counter Register Low
0291 0014	TIMHI	Timer 0 Counter Register High
0291 0018	PRDLO	Timer 0 Period Register Low
0291 001C	PRDHI	Timer 0 Period Register High
0291 0020	TCR	Timer 0 Control Register
0291 0024	TGCR	Timer 0 Global Control Register
0291 0028	WDTCR	Timer 0 Watchdog Timer Control Register
0291 002C	-	Reserved
0291 0030	-	Reserved
0291 0034 - 0291 FFFF	-	Reserved

Copyright © 2008–2011, Texas Instruments Incorporated

Table 7-69. Timer 1 Registers

HEX ADDRESS	ACRONYM	REGISTER NAME
0292 0000	PID	Peripheral ID Register
0292 0004	EMUMGT_CLKSPD	Timer 1 Emulation Management/Clock Speed Register
0292 0008	-	Reserved
0292 000C	-	Reserved
0292 0010	TIMLO	Timer 1 Counter Register Low
0292 0014	TIMHI	Timer 1 Counter Register High
0292 0018	PRDLO	Timer 1 Period Register Low
0292 001C	PRDHI	Timer 1 Period Register High
0292 0020	TCR	Timer 1 Control Register
0292 0024	TGCR	Timer 1 Global Control Register
0292 0028	WDTCR	Timer 1 Watchdog Timer Control Register
0292 002C	-	Reserved
0292 0030	-	Reserved
0292 0034 - 0292 FFFF	-	Reserved

Table 7-70. Timer 2 Registers

HEX ADDRESS	ACRONYM	REGISTER NAME
0293 0000	PID	Peripheral ID Register
0293 0004	EMUMGT_CLKSPD	Timer 2 Emulation Management/Clock Speed Register
0293 0008	-	Reserved
0293 000C	-	Reserved
0293 0010	TIMLO	Timer 2 Counter Register Low
0293 0014	TIMHI	Timer 2 Counter Register High
0293 0018	PRDLO	Timer 2 Period Register Low
0293 001C	PRDHI	Timer 2 Period Register High
0293 0020	TCR	Timer 2 Control Register
0293 0024	TGCR	Timer 2 Global Control Register
0293 0028	WDTCR	Timer 2 Watchdog Timer Control Register
0293 002C	-	Reserved
0293 0030	-	Reserved
0293 0034 - 0293 FFFF	-	Reserved

Table 7-71. Timer 3 Registers

HEX ADDRESS	ACRONYM	REGISTER NAME
0294 0000	PID	Peripheral ID Register
0294 0004	EMUMGT_CLKSPD	Timer 3 Emulation Management/Clock Speed Register
0294 0008	-	Reserved
0294 000C	-	Reserved
0294 0010	TIMLO	Timer 3 Counter Register Low
0294 0014	TIMHI	Timer 3 Counter Register High
0294 0018	PRDLO	Timer 3 Period Register Low
0294 001C	PRDHI	Timer 3 Period Register High
0294 0020	TCR	Timer 3 Control Register
0294 0024	TGCR	Timer 3 Global Control Register
0294 0028	WDTCR	Timer 3 Watchdog Timer Control Register
0294 002C	-	Reserved
0294 0030	-	Reserved

Copyright © 2008–2011, Texas Instruments Incorporated

Table 7-71. Timer 3 Registers (continued)

HEX ADDRESS	ACRONYM	REGISTER NAME
0294 0034 - 0294 FFFF	-	Reserved

Table 7-72. Timer 4 Registers

HEX ADDRESS	ACRONYM	REGISTER NAME
0295 0000	PID	Peripheral ID Register
0295 0004	EMUMGT_CLKSPD	Timer 4 Emulation Management/Clock Speed Register
0295 0008	-	Reserved
0295 000C	-	Reserved
0295 0010	TIMLO	Timer 4 Counter Register Low
0295 0014	TIMHI	Timer 4 Counter Register High
0295 0018	PRDLO	Timer 4 Period Register Low
0295 001C	PRDHI	Timer 4 Period Register High
0295 0020	TCR	Timer 4 Control Register
0295 0024	TGCR	Timer 4 Global Control Register
0295 0028	WDTCR	Timer 4 Watchdog Timer Control Register
0295 002C	-	Reserved
0295 0030	-	Reserved
0295 0034 - 0295 FFFF	-	Reserved

Table 7-73. Timer 5 Registers

HEX ADDRESS	ACRONYM	REGISTER NAME
0296 0000	PID	Peripheral ID Register
0296 0004	EMUMGT_CLKSPD	Timer 5 Emulation Management/Clock Speed Register
0296 0008	-	Reserved
0296 000C	-	Reserved
0296 0010	TIMLO	Timer 5 Counter Register Low
0296 0014	TIMHI	Timer 5 Counter Register High
0296 0018	PRDLO	Timer 5 Period Register Low
0296 001C	PRDHI	Timer 5 Period Register High
0296 0020	TCR	Timer 5 Control Register
0296 0024	TGCR	Timer 5 Global Control Register
0296 0028	WDTCR	Timer 5 Watchdog Timer Control Register
0296 002C	-	Reserved
0296 0030	-	Reserved
0296 0034 - 0296 FFFF	-	Reserved

Table 7-74. Timer Device-Specific Registers

HEX ADDRESS	ACRONYM	REGISTER NAME
0290 0000	TINPSEL	Timer Input Selection
0290 0004	TOUTPSEL	Timer Output Selection
0290 0008	WDRSTSEL	Watchdog Timer Reset Select

Copyright © 2008–2011, Texas Instruments Incorporated

7.15.3 Timers Electrical Data/Timing

Table 7-75. Timing Requirements for Timer Inputs(1)

(see Figure 7-42)

NO.	PARAMETER		MIN	MAX	UNIT
1	$t_{w(TIMH)}$	Pulse duration, TIMI high	12C		ns
2	$t_{w(TIMIL)}$	Pulse duration, TIMI low	12C		ns

(1) C = 1/CPU Clock, in ns.

Table 7-76. Switching Characteristics Over Recommended Operating Conditions for Timer Outputs(1)

(see Figure 7-42)

NO.	PARAMETER		MIN	MAX	UNIT
3	$t_{w(TIMOH)}$	Pulse duration, TIMO high	12C - 3		ns
4	$t_{w(TIMOL)}$	Pulse duration, TIMO low	12C - 3		ns

(1) If CORECLKSEL = 0, C = 1/SYSCLK(NIP) frequency, in ns. If CORECLKSEL = 1, C = 1/ALTCORECLK (N|P) frequency, in ns.

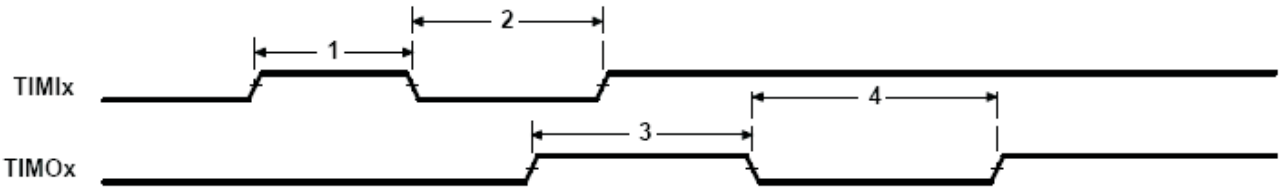

Figure 7-42. Timer Timing

7.16 Enhanced Viterbi-Decoder Coprocessor (VCP2)

7.16.1 VCP2 Device-Specific Information

The C6474 device has a high-performance embedded coprocessor Viterbi-Decoder Coprocessor (VCP2) that significantly speeds up channel-decoding operations on-chip. The VCP2 operating at CPU clock divided-by-3 can decode over 694 7.95-Kbps adaptive multi-rate (AMR)(K = 9, R = 1/3) voice channels. The VCP2 supports constraint lengths K = 5, 6, 7, 8, and 9, rates R = 3/4, 1/2, 1/3, 1/4, and 1/5, and flexible polynomials, while generating hard decisions or soft decisions. Communications between the VCP2 and the CPU are carried out through the EDMA3 controller.

The VCP2 supports:

- Unlimited frame sizes
- Code rates 3/4, 1/2, 1/3, 1/4, and 1/5
- Constraint lengths 5, 6, 7, 8, and 9
- Programmable encoder polynomials
- Programmable reliability and convergence lengths
- Hard and soft decoded decisions
- Tail and convergent modes
- Yamamoto logic
- Tail biting logic
- Various input and output FIFO lengths

For more detailed information on the VCP2, see the *TMS320C6474 DSP Viterbi-Decoder Coprocessor 2 (VCP2) Reference Guide* (literature number SPRUG20).

Copyright © 2008–2011, Texas Instruments Incorporated

7.16.2 VCP2 Peripheral Register Description(s)

Table 7-77. VCP2 Registers

EDMA BUS HEX ADDRESS RANGE	CONFIGURATION BUS HEX ADDRESS RANGE	ACRONYM	REGISTER NAME
5800 0000	-	VCPIC0	VCP2 input configuration Register 0
5800 0004	-	VCPIC1	VCP2 input configuration Register 1
5800 0008	-	VCPIC2	VCP2 input configuration Register 2
5800 000C	-	VCPIC3	VCP2 input configuration Register 3
5800 0010	-	VCPIC4	VCP2 input configuration Register 4
5800 0014	-	VCPIC5	VCP2 Input Configuration Register 5
5800 0018 - 5800 0044	-	-	Reserved
5800 0048	-	VCPOUT0	VCP2 output Register 0
5800 004C	-	VCPOUT1	VCP2 output Register 1
5800 0050 - 5800 007C	-	-	Reserved
5800 0080	N/A	VCPWBM	VCP2 branch metrics write FIFO Register
5800 0084 - 5800 009C	-	-	Reserved
5800 00C0	N/A	VCPRDECS	VCP2 decisions read FIFO Register
N/A	02B8 0018	VCPEXE	VCP2 execution Register
N/A	02B8 0020	VCPEND	VCP2 Endian mode Register
N/A	02B8 0040	VCPSTAT0	VCP2 Status Register 0
N/A	02B8 0044	VCPSTAT1	VCP2 Status Register 1
N/A	02B8 0050	VCPERR	VCP2 error Register
-	-	-	Reserved
N/A	02B8 0060	VCPEMU	VCP2 emulation control Register
N/A	02B8 0064 - 02B9 FFFF	-	Reserved
5800 1000	-	BM	Branch metrics
5800 2000	-	SM	State metric
5800 3000	-	TBHD	Traceback hard decision
5800 6000	-	TBSD	Traceback soft decision
5800 F000	-	IO	Decoded bits

Copyright © 2008–2011, Texas Instruments Incorporated

7.17 Enhanced Turbo Decoder Coprocessor (TCP2)

7.17.1 TCP2 Device-Specific Information

The C6474 device has a high-performance embedded coprocessor Turbo-Decoder Coprocessor (TCP2) that significantly speeds up channel-decoding operations on-chip. The TCP2 operating at CPU clock divided-by-3 can decode up to fifty 384-Kbps or eight 2-Mbps turbo-encoded channels (assuming 6 iterations). The TCP2 implements the max* log-map algorithm and is designed to support all polynomials and rates required by Third-Generation Partnership Projects (3GPP and 3GPP2), with fully programmable frame length and turbo interleaver. Decoding parameters such as the number of iterations and stopping criteria are also programmable. Communications between the TCP2 and the CPU are carried out through the EDMA3 controller.

The TCP2 supports:

- Parallel concatenated convolutional turbo decoding using the MAP algorithm
- All turbo code rates greater than or equal to 1/5
- 3GPP and CDMA2000 turbo encoder trellis
- 3GPP and CDMA2000 block sizes in standalone mode
- Larger block sizes in shared processing mode
- Both max log MAP and log MAP decoding
- Sliding windows algorithm with variable reliability and prolog lengths
- The prolog reduction algorithm
- Execution of a minimum and maximum number of iterations
- The SNR stopping criteria algorithm
- The CRC stopping criteria algorithm

For more detailed information on the TCP2, see the *TMS320C6474 DSP Turbo-Decoder Coprocessor 2 (TCP2) Reference Guide* (literature number SPRUG21).

7.17.2 TCP2 Peripheral Register Description(s)

Table 7-78. TCP2 Registers

EDMA BUS HEX ADDRESS RANGE	CONFIGURATION BUS HEX ADDRESS RANGE	ACRONYM	REGISTER NAME
5000 0000	-	TCPIC0	TCP2 Input Configuration Register 0
5000 0004	-	TCPIC1	TCP2 Input Configuration Register 1
5000 0008	-	TCPIC2	TCP2 Input Configuration Register 2
5000 000C	-	TCPIC3	TCP2 Input Configuration Register 3
5000 0010	-	TCPIC4	TCP2 Input Configuration Register 4
5000 0014	-	TCPIC5	TCP2 Input Configuration Register 5
5000 0018	-	TCPIC6	TCP2 Input Configuration Register 6
5000 001C	-	TCPIC7	TCP2 Input Configuration Register 7
5000 0020	-	TCPIC8	TCP2 Input Configuration Register 8
5000 0024	-	TCPIC9	TCP2 Input Configuration Register 9
5000 0028	-	TCPIC10	TCP2 Input Configuration Register 10
5000 002C	-	TCPIC11	TCP2 Input Configuration Register 11
5000 0030	-	TCPIC12	TCP2 Input Configuration Register 12
5000 0034	-	TCPIC13	TCP2 Input Configuration Register 13
5000 0038	-	TCPIC14	TCP2 Input Configuration Register 14
5000 003C	-	TCPIC15	TCP2 Input Configuration Register 15
5000 0040	-	TCPOUT0	TCP2 Output Parameters Register 0
5000 0044	-	TCPOUT1	TCP2 Output Parameters Register 1

Copyright © 2008–2011, Texas Instruments Incorporated

Table 7-78. TCP2 Registers (continued)

EDMA BUS HEX ADDRESS RANGE	CONFIGURATION BUS HEX ADDRESS RANGE	ACRONYM	REGISTER NAME
5000 0048	-	TCPOUT2	TCP2 Output Parameters Register 2
5001 0000	N/A	X0	TCP2 Data/Sys and Parity Memory
5003 0000	N/A	W0	TCP2 Extrinsic Mem 0
5004 0000	N/A	W1	TCP2 Extrinsic Mem 1
5005 0000	N/A	I0	TCP2 Interleaver Memory
5006 0000	N/A	O0	TCP2 Output/Decision Memory
5007 0000	N/A	S0	TCP2 Scratch Pad Memory
5008 0000	N/A	T0	TCP2 Beta State Memory
5009 0000	N/A	C0	TCP2 CRC Memory
500A 0000	N/A	B0	TCP2 Beta Prolog Memory
500B 0000	N/A	A0	TCP2 Alpha Prolog Memory
N/A	02BA 0000	TCPPID	TCP2 Peripheral Identification Register [Value: 0x0002 1101]
N/A	02BA 004C	TCPEXE	TCP2 Execute Register
N/A	02BA 0050	TCPEND	TCP2 Endian Register
N/A	02BA 0060	TCPERR	TCP2 Error Register
N/A	02BA 0068	TCPSTAT	TCP2 Status Register
N/A	02BA 0070	TCPEMU	TCP2 Emulation Register
N/A	02BA 005C - 02BB FFFF	-	Reserved

Copyright © 2008–2011, Texas Instruments Incorporated

7.18 Serial RapidIO (SRIO) Port

The SRIO Port on the C6474 device is a high-performance, low pin-count interconnect aimed for embedded markets. RapidIO is based on the memory and device addressing concepts of processor buses where the transaction processing is managed completely by hardware. This enables the RapidIO interconnect to lower the system cost by providing lower latency, reduced overhead of packet data processing, and higher system bandwidth, all of which are key for wireless interfaces. The RapidIO interconnect offers very low pin-count interfaces with scalable system bandwidth based on 10-Gigabit per second (Gbps) bidirectional links.

The PHY part of the RIO consists of the physical layer and includes the input and output buffers (each serial link consists of a differential pair), the 8-bit/10-bit encoder/decoder, the PLL clock recovery, and the parallel-to-serial/serial-to-parallel converters.

The RapidIO interface should be designed to operate at a data rate up to 3.125 Gbps per differential pair.

7.18.1 SRIO Device-Specific Information

The approach to specifying interface timing for the SRIO Port is different than on other interfaces such as McBSP. For these other interfaces the device timing was specified in terms of data manual specifications and I/O buffer information specification (IBIS) models.

For the SRIO Port, Texas Instruments (TI) provides a printed circuit board (PCB) solution showing two DSPs connected via a 1x SRIO link directly to the user. TI has performed the simulation and system characterization to ensure all SRIO interface timings in this solution are met. The complete SRIO system solution is documented in the *TMS320C6474 DSP SERDES Implementation Guidelines* application report (literature number SPRAAW9).

TI *only* supports designs that follow the board design guidelines outlined in the SPRAAW9 application report.

The Serial RapidIO peripheral is a master peripheral in the C6474 DSP. It conforms to the *RapidIO™ Interconnect Specification, Part VI: Physical Layer 1x/4x LP-Serial Specification, Revision 1.2*.

7.18.2 SRIO Register Description(s)

Table 7-79. RapidIO Control Registers

HEX ADDRESS	ACRONYM	REGISTER NAME
02D0 0000	RIOPID	RapidIO Peripheral Identification Register
02D0 0004	RIO_PCR	RapidIO Peripheral Control Register
02D0 0008 - 02D0 001C	-	Reserved
02D0 0020	RIO_PER_SET_CNTL	RapidIO Peripheral Settings Control Register
02D0 0024 - 02D0 002C	-	Reserved
02D0 0030	RIO_GBL_EN	RapidIO Peripheral Global Enable Register
02D0 0034	RIO_GBL_EN_STAT	RapidIO Peripheral Global Enable Status Register
02D0 0038	RIO_BLK0_EN	RapidIO Block0 Enable Register
02D0 003C	RIO_BLK0_EN_STAT	RapidIO Block0 Enable Status Register
02D0 0040	RIO_BLK1_EN	RapidIO Block1 Enable Register
02D0 0044	RIO_BLK1_EN_STAT	RapidIO Block1 Enable Status Register
02D0 0048	RIO_BLK2_EN	RapidIO Block2 Enable Register
02D0 004C	RIO_BLK2_EN_STAT	RapidIO Block2 Enable Status Register
02D0 0050	RIO_BLK3_EN	RapidIO Block3 Enable Register
02D0 0054	RIO_BLK3_EN_STAT	RapidIO Block3 Enable Status Register
02D0 0058	RIO_BLK4_EN	RapidIO Block4 Enable Register
02D0 005C	RIO_BLK4_EN_STAT	RapidIO Block4 Enable Status Register
02D0 0060	RIO_BLK5_EN	RapidIO Block5 Enable Register

Copyright © 2008–2011, Texas Instruments Incorporated

Table 7-79. RapidIO Control Registers (continued)

HEX ADDRESS	ACRONYM	REGISTER NAME
02D0 0064	RIO_BLK5_EN_STAT	RapidIO Block5 Enable Status Register
02D0 0068	RIO_BLK6_EN	RapidIO Block6 Enable Register
02D0 006C	RIO_BLK6_EN_STAT	RapidIO Block6 Enable Status Register
02D0 0070	RIO_BLK7_EN	RapidIO Block7 Enable Register
02D0 0074	RIO_BLK7_EN_STAT	RapidIO Block7 Enable Status Register
02D0 0078	RIO_BLK8_EN	RapidIO Block8 Enable Register
02D0 007C	RIO_BLK8_EN_STAT	RapidIO Block8 Enable Status Register
02D0 0080	RIO_DEVICEID_REG1	RapidIO Device ID Register 1
02D0 0084	RIO_DEVICEID_REG2	RapidIO Device ID Register 2
02D0 0088	RIO_DEVICEID_REG3	RapidIO Device ID Register 3
02D0 008C	RIO_DEVICEID_REG4	RapidIO Device ID Register 4
02D0 0090	PF_16B_CNTL0	Packet Forwarding Register 0 for 16-Bit Device IDs
02D0 0094	PF_8B_CNTL0	Packet Forwarding Register 0 for 8-Bit Device IDs
02D0 0098	PF_16B_CNTL1	Packet Forwarding Register 1 for 16-Bit Device IDs
02D0 009C	PF_8B_CNTL1	Packet Forwarding Register 1 for 8-Bit Device IDs
02D0 00A0	PF_16B_CNTL2	Packet Forwarding Register 2 for 16-Bit Device IDs
02D0 00A4	PF_8B_CNTL2	Packet Forwarding Register 2 for 8-Bit Device IDs
02D0 00A8	PF_16B_CNTL3	Packet Forwarding Register 3 for 16-Bit Device IDs
02D0 00AC	PF_8B_CNTL3	Packet Forwarding Register 3 for 8-Bit Device IDs
02D0 00B0 - 02D0 00FC	-	Reserved
02D0 0100	RIO_SERDES_CFGRX0_CNTL	RapidIO SerDes RX Channel 0 CFG Register
02D0 0104	RIO_SERDES_CFGRX1_CNTL	RapidIO SerDes RX Channel 1 CFG Register
02D0 0108	RIO_SERDES_CFGRX2_CNTL	RapidIO SerDes RX Channel 2 CFG Register
02D0 010C	RIO_SERDES_CFGRX3_CNTL	RapidIO SerDes RX Channel 3 CFG Register
02D0 0110	RIO_SERDES_CFGTX0_CNTL	RapidIO SerDes TX Channel 0 CFG Register
02D0 0114	RIO_SERDES_CFGTX1_CNTL	RapidIO SerDes TX Channel 1 CFG Register
02D0 0118	RIO_SERDES_CFGTX2_CNTL	RapidIO SerDes TX Channel 2 CFG Register
02D0 011C	RIO_SERDES_CFGTX3_CNTL	RapidIO SerDes TX Channel 3 CFG Register
02D0 0120	RIO_SERDS_CFG0_CNTL	RapidIO SerDes Macro 0 CFG Control Register
02D0 0124	RIO_SERDS_CFG1_CNTL	RapidIO SerDes Macro 1 CFG Control Register
02D0 0128	RIO_SERDS_CFG2_CNTL	RapidIO SerDes Macro 2 CFG Control Register
02D0 012C	RIO_SERDS_CFG3_CNTL	RapidIO SerDes Macro 3 CFG Control Register
02D0 0130 - 02D0 01FC	-	Reserved
02D0 0200	DOORBELL0_ICSR	DOORBELL Interrupt Condition Status Register 0
02D0 0204	-	Reserved
02D0 0208	DOORBELL0_ICCR	DOORBELL Interrupt Condition Clear Register 0
02D0 020C	-	Reserved
02D0 0210	DOORBELL1_ICSR	DOORBELL Interrupt Condition Status Register 1
02D0 0214	-	Reserved
02D0 0218	DOORBELL1_ICCR	DOORBELL Interrupt Condition Clear Register 1
02D0 021C	-	Reserved
02D0 0220	DOORBELL2_ICSR	DOORBELL Interrupt Condition Status Register 2
02D0 0224	-	Reserved
02D0 0228	DOORBELL2_ICCR	DOORBELL Interrupt Condition Clear Register 2
02D0 022C	-	Reserved
02D0 0230	DOORBELL3_ICSR	DOORBELL Interrupt Condition Status Register 3
02D0 0234	-	Reserved

Copyright © 2008–2011, Texas Instruments Incorporated

Table 7-79. RapidIO Control Registers (continued)

HEX ADDRESS	ACRONYM	REGISTER NAME
02D0 0238	DOORBELL3_ICCR	DOORBELL Interrupt Condition Clear Register 3
02D0 023C	-	Reserved
02D0 0240	RX_CPPI_ICSR	RX CPPI Interrupt Condition Status Register
02D0 0244	-	Reserved
02D0 0248	RX_CPPI_ICCR	RX CPPI Interrupt Condition Clear Register
02D0 024C	-	Reserved
02D0 0250	TX_CPPI_ICSR	TX CPPI Interrupt Condition Status Register
02D0 0254	-	Reserved
02D0 0258	TX_CPPI_ICCR	TX CPPI Interrupt Condition Clear Register
02D0 025C	-	Reserved
02D0 0260	LSU_ICSR	LSU Interrupt Condition Status Register
02D0 0264	-	Reserved
02D0 0268	LSU_ICCR	LSU Interrupt Condition Clear Register
02D0 026C	-	Reserved
02D0 0270	ERR_RST_EVNT_ICSR	Error, Reset, and Special Event Interrupt Condition Status Register
02D0 0274	-	Reserved
02D0 0278	ERR_RST_EVNT_ICCR	Error, Reset, and Special Event Interrupt Condition Clear Register
02D0 027C	-	Reserved
02D0 0280	DOORBELL0_ICRR	DOORBELL0 Interrupt Condition Routing Register
02D0 0284	DOORBELL0_ICRR2	DOORBELL 0 Interrupt Condition Routing Register 2
02D0 0288 - 02D0 028C	-	Reserved
02D0 0290	DOORBELL1_ICRR	DOORBELL1 Interrupt Condition Routing Register
02D0 0294	DOORBELL1_ICRR2	DOORBELL 1 Interrupt Condition Routing Register 2
02D0 0298 - 02D0 029C	-	Reserved
02D0 02A0	DOORBELL2_ICRR	DOORBELL2 Interrupt Condition Routing Register
02D0 02A4	DOORBELL2_ICRR2	DOORBELL 2 Interrupt Condition Routing Register 2
02D0 02A8 - 02D0 02AC	-	Reserved
02D0 02B4	DOORBELL3_ICRR2	DOORBELL 3 Interrupt Condition Routing Register 2
02D0 02B8 - 02D0 02BC	-	Reserved
02D0 02C0	RX_CPPI _ICRR	Receive CPPI Interrupt Condition Routing Register
02D0 02C4	RX_CPPI _ICRR2	Receive CPPI Interrupt Condition Routing Register 2
02D0 02C8 - 02D0 02CC	-	Reserved
02D0 02D0	TX_CPPI _ICRR	Transmit CPPI Interrupt Condition Routing Register
02D0 02D4	TX_CPPI _ICRR2	Transmit CPPI Interrupt Condition Routing Register 2
02D0 02D8 - 02D0 02DC	-	Reserved
02D0 02E0	LSU_ICRR0	LSU Interrupt Condition Routing Register 0
02D0 02E4	LSU_ICRR1	LSU Interrupt Condition Routing Register 1
02D0 02E8	LSU_ICRR2	LSU Interrupt Condition Routing Register 2
02D0 02EC	LSU_ICRR3	LSU Interrupt Condition Routing Register 3
02D0 02F0	ERR_RST_EVNT_ICRR	Error, Reset, and Special Event Interrupt Condition Routing Register
02D0 02F4	ERR_RST_EVNT_ICRR2	Error, Reset, and Special Event Interrupt Condition Routing Register 2
02D0 02F8	ERR_RST_EVNT_ICRR3	Error, Reset, and Special Event Interrupt Condition Routing Register 3
02D0 02FC	-	Reserved
02D0 0300	INTDST0_DECODE	INTDST Interrupt Status Decode Register 0

Copyright © 2008–2011, Texas Instruments Incorporated

Table 7-79. RapidIO Control Registers (continued)

HEX ADDRESS	ACRONYM	REGISTER NAME
02D0 0304	INTDST1_DECODE	INTDST Interrupt Status Decode Register 1
02D0 0308	INTDST2_DECODE	INTDST Interrupt Status Decode Register 2
02D0 030C	RIO_INTDST3_Decode	RapidIO INTDST3 Interrupt Status Decode Register
02D0 0310	RIO_INTDST4_Decode	RapidIO INTDST4 Interrupt Status Decode Register
02D0 0314	RIO_INTDST5_Decode	RapidIO INTDST5 Interrupt Status Decode Register
02D0 0318	RIO_INTDST6_Decode	RapidIO INTDST6 Interrupt Status Decode Register
02D0 031C	RIO_INTDST7_Decode	RapidIO INTDST7 Interrupt Status Decode Register
02D0 0320	RIO_INTDST0_Rate_CNTL	RapidIO INTDST0 Interrupt Rate Control Register
02D0 0324	RIO_INTDST1_Rate_CNTL	RapidIO INTDST1 Interrupt Rate Control Register
02D0 0328	RIO_INTDST2_Rate_CNTL	RapidIO INTDST2 Interrupt Rate Control Register
02D0 032C	RIO_INTDST3_Rate_CNTL	RapidIO INTDST3 Interrupt Rate Control Register
02D0 0330	RIO_INTDST4_Rate_CNTL	RapidIO INTDST4 Interrupt Rate Control Register
02D0 0334	RIO_INTDST5_Rate_CNTL	RapidIO INTDST5 Interrupt Rate Control Register
02D0 0338	RIO_INTDST6_Rate_CNTL	RapidIO INTDST6 Interrupt Rate Control Register
02D0 033C	RIO_INTDST7_Rate_CNTL	RapidIO INTDST7 Interrupt Rate Control Register
02D0 0340 - 02D0 03FC	-	Reserved
02D0 0400	RIO_LSU1_Reg0	RapidIO LSU1 Control Reg0 Register
02D0 0404	RIO_LSU1_Reg1	RapidIO LSU1 Control Reg1 Register
02D0 0408	RIO_LSU1_Reg2	RapidIO LSU1 Control Reg2 Register
02D0 040C	RIO_LSU1_Reg3	RapidIO LSU1 Control Reg3 Register
02D0 0410	RIO_LSU1_Reg4	RapidIO LSU1 Control Reg4 Register
02D0 0414	RIO_LSU1_Reg5	RapidIO LSU1 Control Reg5 Register
02D0 0418	RIO_LSU1_Reg6	RapidIO LSU1 Control Reg6 Register
02D0 041C	RIO_LSU1_FLOW_MASKS	RapidIO Core0 LSU Congestion Control Flow Mask Register
02D0 0420	RIO_LSU2_Reg0	RapidIO LSU2 Control Reg0 Register
02D0 0424	RIO_LSU2_Reg1	RapidIO LSU2 Control Reg1 Register
02D0 0428	RIO_LSU2_Reg2	RapidIO LSU2 Control Reg2 Register
02D0 042C	RIO_LSU2_Reg3	RapidIO LSU2 Control Reg3 Register
02D0 0430	RIO_LSU2_Reg4	RapidIO LSU2 Control Reg4 Register
02D0 0434	RIO_LSU2_Reg5	RapidIO LSU2 Control Reg5 Register
02D0 0438	RIO_LSU2_Reg6	RapidIO LSU2 Control Reg6 Register
02D0 043C	RIO_LSU2_FLOW_MASKS	RapidIO Core1 LSU Congestion Control Flow Mask Register
02D0 0440	RIO_LSU3_Reg0	RapidIO LSU3 Control Reg0 Register
02D0 0444	RIO_LSU3_Reg1	RapidIO LSU3 Control Reg1 Register
02D0 0448	RIO_LSU3_Reg2	RapidIO LSU3 Control Reg2 Register
02D0 044C	RIO_LSU3_Reg3	RapidIO LSU3 Control Reg3 Register
02D0 0450	RIO_LSU3_Reg4	RapidIO LSU3 Control Reg4 Register
02D0 0454	RIO_LSU3_Reg5	RapidIO LSU3 Control Reg5 Register
02D0 0458	RIO_LSU3_Reg6	RapidIO LSU3 Control Reg6 Register
02D0 045C	RIO_LSU3_FLOW_MASKS	RapidIO Core2 LSU Congestion Control Flow Mask Register
02D0 0460	RIO_LSU4_Reg0	RapidIO LSU4 Control Reg0 Register
02D0 0464	RIO_LSU4_Reg1	RapidIO LSU4 Control Reg1 Register
02D0 0468	RIO_LSU4_Reg2	RapidIO LSU4 Control Reg2 Register
02D0 046C	RIO_LSU4_Reg3	RapidIO LSU4 Control Reg3 Register
02D0 0470	RIO_LSU4_Reg4	RapidIO LSU4 Control Reg4 Register

Copyright © 2008–2011, Texas Instruments Incorporated

Table 7-79. RapidIO Control Registers (continued)

HEX ADDRESS	ACRONYM	REGISTER NAME
02D0 0474	RIO_LSU4_Reg5	RapidIO LSU4 Control Reg5 Register
02D0 0478	RIO_LSU4_Reg6	RapidIO LSU4 Control Reg6 Register
02D0 047C	RIO_LSU4_FLOW_MASKS	RapidIO Core3 LSU Congestion Control Flow Mask Register
02D0 0480 - 02D0 04FC	-	Reserved
02D0 0500	RIO_Queue0_TxDMA_HDP	RapidIO Queue0 TX DMA Head Descriptor Pointer Register
02D0 0504	RIO_Queue1_TxDMA_HDP	RapidIO Queue1 TX DMA Head Descriptor Pointer Register
02D0 0508	RIO_Queue2_TxDMA_HDP	RapidIO Queue2 TX DMA Head Descriptor Pointer Register
02D0 050C	RIO_Queue3_TxDMA_HDP	RapidIO Queue3 TX DMA Head Descriptor Pointer Register
02D0 0510	RIO_Queue4_TxDMA_HDP	RapidIO Queue4 TX DMA Head Descriptor Pointer Register
02D0 0514	RIO_Queue5_TxDMA_HDP	RapidIO Queue5 TX DMA Head Descriptor Pointer Register
02D0 0518	RIO_Queue6_TxDMA_HDP	RapidIO Queue6 TX DMA Head Descriptor Pointer Register
02D0 051C	RIO_Queue7_TxDMA_HDP	RapidIO Queue7 TX DMA Head Descriptor Pointer Register
02D0 0520	RIO_Queue8_TxDMA_HDP	RapidIO Queue8 TX DMA Head Descriptor Pointer Register
02D0 0524	RIO_Queue9_TxDMA_HDP	RapidIO Queue9 TX DMA Head Descriptor Pointer Register
02D0 0528	RIO_Queue10_TxDMA_HDP	RapidIO Queue10 TX DMA Head Descriptor Pointer Register
02D0 052C	RIO_Queue11_TxDMA_HDP	RapidIO Queue11TX DMA Head Descriptor Pointer Register
02D0 0530	RIO_Queue12_TxDMA_HDP	RapidIO Queue12 TX DMA Head Descriptor Pointer Register
02D0 0534	RIO_Queue13_TxDMA_HDP	RapidIO Queue13 TX DMA Head Descriptor Pointer Register
02D0 0538	RIO_Queue14_TxDMA_HDP	RapidIO Queue14 TX DMA Head Descriptor Pointer Register
02D0 053C	RIO_Queue15_TxDMA_HDP	RapidIO Queue15 TX DMA Head Descriptor Pointer Register
02D0 0540	RIO_Queue16_TxDMA_HDP	RapidIO Queue16 TX DMA Head Descriptor Pointer Register
02D0 0544	RIO_Queue17_TxDMA_HDP	RapidIO Queue17 TX DMA Head Descriptor Pointer Register
02D0 0548	RIO_Queue18_TxDMA_HDP	RapidIO Queue18 TX DMA Head Descriptor Pointer Register
02D0 054C	RIO_Queue19_TxDMA_HDP	RapidIO Queue19 TX DMA Head Descriptor Pointer Register
02D0 0550 - 02D0 057C	-	Reserved
02D0 0580	RIO_Queue0_TxDMA_CP	RapidIO Queue0 TX DMA Completion Pointer Register
02D0 0584	RIO_Queue1_TxDMA_CP	RapidIO Queue1 TX DMA Completion Pointer Register
02D0 0588	RIO_Queue2_TxDMA_CP	RapidIO Queue2 TX DMA Completion Pointer Register
02D0 058C	RIO_Queue3_TxDMA_CP	RapidIO Queue3 TX DMA Completion Pointer Register
02D0 0590	RIO_Queue4_TxDMA_CP	RapidIO Queue4 TX DMA Completion Pointer Register
02D0 0594	RIO_Queue5_TxDMA_CP	RapidIO Queue5 TX DMA Completion Pointer Register
02D0 0598	RIO_Queue6_TxDMA_CP	RapidIO Queue6 TX DMA Completion Pointer Register
02D0 059C	RIO_Queue7_TxDMA_CP	RapidIO Queue7 TX DMA Completion Pointer Register

Copyright © 2008–2011, Texas Instruments Incorporated

Table 7-79. RapidIO Control Registers (continued)

HEX ADDRESS	ACRONYM	REGISTER NAME
02D0 05A0	RIO_Queue8_TxDMA_CP	RapidIO Queue8 TX DMA Completion Pointer Register
02D0 05A4	RIO_Queue9_TxDMA_CP	RapidIO Queue9 TX DMA Completion Pointer Register
02D0 05A8	RIO_Queue10_TxDMA_CP	RapidIO Queue10 TX DMA Completion Pointer Register
02D0 05AC	RIO_Queue11_TxDMA_CP	RapidIO Queue11 TX DMA Completion Pointer Register
02D0 05B0	RIO_Queue12_TxDMA_CP	RapidIO Queue12 TX DMA Completion Pointer Register
02D0 05B4	RIO_Queue13_TxDMA_CP	RapidIO Queue13 TX DMA Completion Pointer Register
02D0 05B8	RIO_Queue14_TxDMA_CP	RapidIO Queue14 TX DMA Completion Pointer Register
02D0 05BC	RIO_Queue15_TxDMA_CP	RapidIO Queue15 TX DMA Completion Pointer Register
02D0 05C0 - 02D0 05FC	-	Reserved
02D0 0600	RIO_Queue0_RxDMA_HDP	RapidIO Queue0 RX DMA Head Descriptor Pointer Register
02D0 0604	RIO_Queue1_RxDMA_HDP	RapidIO Queue1 RX DMA Head Descriptor Pointer Register
02D0 0608	RIO_Queue2_RxDMA_HDP	RapidIO Queue2 RX DMA Head Descriptor Pointer Register
02D0 060C	RIO_Queue3_RxDMA_HDP	RapidIO Queue3 RX DMA Head Descriptor Pointer Register
02D0 0610	RIO_Queue4_RxDMA_HDP	RapidIO Queue4 RX DMA Head Descriptor Pointer Register
02D0 0614	RIO_Queue5_RxDMA_HDP	RapidIO Queue5 RX DMA Head Descriptor Pointer Register
02D0 0618	RIO_Queue6_RxDMA_HDP	RapidIO Queue6 RX DMA Head Descriptor Pointer Register
02D0 061C	RIO_Queue7_RxDMA_HDP	RapidIO Queue7 RX DMA Head Descriptor Pointer Register
02D0 0620	RIO_Queue8_RxDMA_HDP	RapidIO Queue8 RX DMA Head Descriptor Pointer Register
02D0 0624	RIO_Queue9_RxDMA_HDP	RapidIO Queue9 RX DMA Head Descriptor Pointer Register
02D0 0628	RIO_Queue10_RxDMA_HDP	RapidIO Queue10 RX DMA Head Descriptor Pointer Register
02D0 062C	RIO_Queue11_RxDMA_HDP	RapidIO Queue11 RX DMA Head Descriptor Pointer Register
02D0 0630	RIO_Queue12_RxDMA_HDP	RapidIO Queue12 RX DMA Head Descriptor Pointer Register
02D0 0634	RIO_Queue13_RxDMA_HDP	RapidIO Queue13 RX DMA Head Descriptor Pointer Register
02D0 0638	RIO_Queue14_RxDMA_HDP	RapidIO Queue14 RX DMA Head Descriptor Pointer Register
02D0 063C	RIO_Queue15_RxDMA_HDP	RapidIO Queue15 RX DMA Head Descriptor Pointer Register
02D0 0640 - 02D0 067C	-	Reserved
02D0 0680	RIO_Queue0_RxDMA_CP	RapidIO Queue0 RX DMA Completion Pointer Register
02D0 0684	RIO_Queue1_RxDMA_CP	RapidIO Queue1 RX DMA Completion Pointer Register
02D0 0688	RIO_Queue2_RxDMA_CP	RapidIO Queue2 RX DMA Completion Pointer Register
02D0 068C	RIO_Queue3_RxDMA_CP	RapidIO Queue3 RX DMA Completion Pointer Register
02D0 0690	RIO_Queue4_RxDMA_CP	RapidIO Queue4 RX DMA Completion Pointer Register
02D0 0694	RIO_Queue5_RxDMA_CP	RapidIO Queue5 RX DMA Completion Pointer Register
02D0 0698	RIO_Queue6_RxDMA_CP	RapidIO Queue6 RX DMA Completion Pointer Register
02D0 069C	RIO_Queue7_RxDMA_CP	RapidIO Queue7 RX DMA Completion Pointer Register
02D0 06A0	RIO_Queue8_RxDMA_CP	RapidIO Queue8 RX DMA Completion Pointer Register
02D0 06A4	RIO_Queue9_RxDMA_CP	RapidIO Queue9 RX DMA Completion Pointer Register

Copyright © 2008–2011, Texas Instruments Incorporated

Table 7-79. RapidIO Control Registers (continued)

HEX ADDRESS	ACRONYM	REGISTER NAME
02D0 0648	RIO_Queue10_RxDMA_CP	RapidIO Queue10 RX DMA Completion Pointer Register
02D0 06AC	RIO_Queue11_RxDMA_CP	RapidIO Queue11 RX DMA Completion Pointer Register
02D0 06B0	RIO_Queue12_RxDMA_CP	RapidIO Queue12 RX DMA Completion Pointer Register
02D0 06B4	RIO_Queue13_RxDMA_CP	RapidIO Queue13 RX DMA Completion Pointer Register
02D0 06B8	RIO_Queue14_RxDMA_CP	RapidIO Queue14 RX DMA Completion Pointer Register
02D0 06BC	RIO_Queue15_RxDMA_CP	RapidIO Queue15 RX DMA Completion Pointer Register
02D0 06C0 - 02D0 06FC	-	Reserved
02D0 0700	RIO_TXQUEUE_TEAR_DOWN	RapidIO TX Queue Tear Down Register
02D0 0704	RIO_TX_CPPI_FLOW_MASKS0	RapidIO TX CPPI Support Flow Masks 0 Register
02D0 0708	RIO_TX_CPPI_FLOW_MASKS1	RapidIO TX CPPI Support Flow Masks 1 Register
02D0 070C	RIO_TX_CPPI_FLOW_MASKS2	RapidIO TX CPPI Support Flow Masks 2 Register
02D0 0710	RIO_TX_CPPI_FLOW_MASKS3	RapidIO TX CPPI Support Flow Masks 3 Register
02D0 0714	RIO_TX_CPPI_FLOW_MASKS4	RapidIO TX CPPI Support Flow Masks 4 Register
02D0 0718 - 02D0 073C	-	Reserved
02D0 0740	RIO_RX_QUEUE_TEAR_DOWN	RapidIO RX Queue Tear Down Register
02D0 0744	RIO_RX_CPPI_CNTL	RapidIO CPPI Control Register
02D0 0748 - 02D0 07DC	-	Reserved
02D0 07E0	RIO_TX_QUEUE_CNTL0	RapidIO TX Queue Control 0 Register
02D0 07E4	RIO_TX_QUEUE_CNTL1	RapidIO TX Queue Control 1 Register
02D0 07E8	RIO_TX_QUEUE_CNTL2	RapidIO TX Queue Control 2 Register
02D0 07EC	RIO_TX_QUEUE_CNTL3	RapidIO TX Queue Control 3 Register
02D0 07F0 - 02D0 07FC	-	Reserved
02D0 0800	RXU_MAP_L0	Mailbox-to-Queue Mapping Register L0
02D0 0804	RXU_MAP_H0	Mailbox-to-Queue Mapping Register H0
02D0 0808	RXU_MAP_L1	Mailbox-to-Queue Mapping Register L1
02D0 080C	RXU_MAP_H1	Mailbox-to-Queue Mapping Register H1
02D0 0810	RXU_MAP_L2	Mailbox-to-Queue Mapping Register L2
02D0 0814	RXU_MAP_H2	Mailbox-to-Queue Mapping Register H2
02D0 0818	RXU_MAP_L3	Mailbox-to-Queue Mapping Register L3
02D0 081C	RXU_MAP_H3	Mailbox-to-Queue Mapping Register H3
02D0 0820	RXU_MAP_L4	Mailbox-to-Queue Mapping Register L4
02D0 0824	RXU_MAP_H4	Mailbox-to-Queue Mapping Register H4
02D0 0828	RXU_MAP_L5	Mailbox-to-Queue Mapping Register L5
02D0 082C	RXU_MAP_H5	Mailbox-to-Queue Mapping Register H5
02D0 0830	RXU_MAP_L6	Mailbox-to-Queue Mapping Register L6
02D0 0834	RXU_MAP_H6	Mailbox-to-Queue Mapping Register H6
02D0 0838	RXU_MAP_L7	Mailbox-to-Queue Mapping Register L7
02D0 083C	RXU_MAP_H7	Mailbox-to-Queue Mapping Register H7
02D0 0840	RXU_MAP_L8	Mailbox-to-Queue Mapping Register L8
02D0 0844	RXU_MAP_H8	Mailbox-to-Queue Mapping Register H8
02D0 0848	RXU_MAP_L9	Mailbox-to-Queue Mapping Register L9
02D0 084C	RXU_MAP_H9	Mailbox-to-Queue Mapping Register H9
02D0 0850	RXU_MAP_L10	Mailbox-to-Queue Mapping Register L10
02D0 0854	RXU_MAP_H10	Mailbox-to-Queue Mapping Register H10
02D0 0858	RXU_MAP_L11	Mailbox-to-Queue Mapping Register L11
02D0 085C	RXU_MAP_H11	Mailbox-to-Queue Mapping Register H11
02D0 08560	RXU_MAP_L12	Mailbox-to-Queue Mapping Register L12

Copyright © 2008–2011, Texas Instruments Incorporated

Table 7-79. RapidIO Control Registers (continued)

HEX ADDRESS	ACRONYM	REGISTER NAME
02D0 0864	RXU_MAP_H12	Mailbox-to-Queue Mapping Register H12
02D0 0868	RXU_MAP_L13	Mailbox-to-Queue Mapping Register L13
02D0 086C	RXU_MAP_H13	Mailbox-to-Queue Mapping Register H13
02D0 0870	RXU_MAP_L14	Mailbox-to-Queue Mapping Register L14
02D0 0874	RXU_MAP_H14	Mailbox-to-Queue Mapping Register H14
02D0 0878	RXU_MAP_L15	Mailbox-to-Queue Mapping Register L15
02D0 087C	RXU_MAP_H15	Mailbox-to-Queue Mapping Register H15
02D0 0880	RXU_MAP_L16	Mailbox-to-Queue Mapping Register L16
02D0 0884	RXU_MAP_H16	Mailbox-to-Queue Mapping Register H16
02D0 0888	RXU_MAP_L17	Mailbox-to-Queue Mapping Register L17
02D0 088C	RXU_MAP_H17	Mailbox-to-Queue Mapping Register H17
02D0 0890	RXU_MAP_L18	Mailbox-to-Queue Mapping Register L18
02D0 0894	RXU_MAP_H18	Mailbox-to-Queue Mapping Register H18
02D0 0898	RXU_MAP_L19	Mailbox-to-Queue Mapping Register L19
02D0 089C	RXU_MAP_H19	Mailbox-to-Queue Mapping Register H19
02D0 08A0	RXU_MAP_L20	Mailbox-to-Queue Mapping Register L20
02D0 08A4	RXU_MAP_H20	Mailbox-to-Queue Mapping Register H20
02D0 08A8	RXU_MAP_L21	Mailbox-to-Queue Mapping Register L21
02D0 08AC	RXU_MAP_H21	Mailbox-to-Queue Mapping Register H21
02D0 08B0	RXU_MAP_L22	Mailbox-to-Queue Mapping Register L22
02D0 08B4	RXU_MAP_H22	Mailbox-to-Queue Mapping Register H22
02D0 08B8	RXU_MAP_L23	Mailbox-to-Queue Mapping Register L23
02D0 08BC	RXU_MAP_H23	Mailbox-to-Queue Mapping Register H23
02D0 08C0	RXU_MAP_L24	Mailbox-to-Queue Mapping Register L24
02D0 08C4	RXU_MAP_H24	Mailbox-to-Queue Mapping Register H24
02D0 08C8	RXU_MAP_L25	Mailbox-to-Queue Mapping Register L25
02D0 08CC	RXU_MAP_H25	Mailbox-to-Queue Mapping Register H25
02D0 08D0	RXU_MAP_L26	Mailbox-to-Queue Mapping Register L26
02D0 08D4	RXU_MAP_H26	Mailbox-to-Queue Mapping Register H26
02D0 08D8	RXU_MAP_L27	Mailbox-to-Queue Mapping Register L27
02D0 08DC	RXU_MAP_H27	Mailbox-to-Queue Mapping Register H27
02D0 08E0	RXU_MAP_L28	Mailbox-to-Queue Mapping Register L28
02D0 08E4	RXU_MAP_H28	Mailbox-to-Queue Mapping Register H28
02D0 08E8	RXU_MAP_L29	Mailbox-to-Queue Mapping Register L29
02D0 08EC	RXU_MAP_H29	Mailbox-to-Queue Mapping Register H29
02D0 08F0	RXU_MAP_L30	Mailbox-to-Queue Mapping Register L30
02D0 08F4	RXU_MAP_H30	Mailbox-to-Queue Mapping Register H30
02D0 08F8	RXU_MAP_L31	Mailbox-to-Queue Mapping Register L31
02D0 08FC	RXU_MAP_H31	Mailbox-to-Queue Mapping Register H31
02D0 0900	FLOW_CNTL0	Flow Control Table Entry Register 0
02D0 0904	FLOW_CNTL1	Flow Control Table Entry Register 1
02D0 0908	FLOW_CNTL2	Flow Control Table Entry Register 2
02D0 090C	FLOW_CNTL3	Flow Control Table Entry Register 3
02D0 0910	FLOW_CNTL4	Flow Control Table Entry Register 4
02D0 0914	FLOW_CNTL5	Flow Control Table Entry Register 5
02D0 0918	FLOW_CNTL6	Flow Control Table Entry Register 6
02D0 091C	FLOW_CNTL7	Flow Control Table Entry Register 7

Copyright © 2008–2011, Texas Instruments Incorporated

Table 7-79. RapidIO Control Registers (continued)

HEX ADDRESS	ACRONYM	REGISTER NAME
02D0 0920	FLOW_CNTL8	Flow Control Table Entry Register 8
02D0 0924	FLOW_CNTL9	Flow Control Table Entry Register 9
02D0 0928	FLOW_CNTL10	Flow Control Table Entry Register 10
02D0 092C	FLOW_CNTL11	Flow Control Table Entry Register 11
02D0 0930	FLOW_CNTL12	Flow Control Table Entry Register 12
02D0 0934	FLOW_CNTL13	Flow Control Table Entry Register 13
02D0 0938	FLOW_CNTL14	Flow Control Table Entry Register 14
02D0 093C	FLOW_CNTL15	Flow Control Table Entry Register 15
02D0 0940 - 02D0 0FFC	-	Reserved
02D0 1000	DEV_ID	Device Identity CAR
02D0 1004	DEV_INFO	Device Information CAR
02D0 1008	ASBLY_ID	Assembly Identity CAR
02D0 100C	ASBLY_INFO	Assembly Information CAR
02D0 1010	PE_FEAT	Processing Element Features CAR
02D0 1014	-	Reserved
02D0 1018	SRC_OP	Source Operations CAR
02D0 101C	DEST_OP	Destination Operations CAR
02D0 1020 - 02D0 1048	-	Reserved
02D0 104C	PE_LL_CTL	Processing Element Logical Layer Control CSR
02D0 1050	-	Reserved
02D0 1058	LCL_CFG_HBAR	Local Configuration Space Base Address 0 CSR
02D0 105C	LCL_CFG_BAR	Local Configuration Space Base Address 1
02D0 1060	BASE_ID	Base Device ID CSR
02D0 1064	-	Reserved
02D0 1068	HOST_BASE_ID_LOCK	Host Base Device ID Lock CSR
02D0 106C	COMP_TAG	Component Tag CSR
02D0 1070 - 02D0 10FC	-	Reserved
02D0 1100	SP_MB_HEAD	1x/4x LP_Serial Port Maintenance Block Header
02D0 1104 - 02D0 111C	-	Reserved
02D0 1120	SP_LT_CTL	Port Link Time-Out Control CSR
02D0 1124	SP_RT_CTL	Port Response Time-Out Control CSR
02D0 1128 - 02D0 1138	-	Reserved
02D0 113C	SP_GEN_CTL	Port General Control CSR
02D0 1140	SP0_LM_REQ	Port 0 Link Maintenance Request CSR
02D0 1144	SP0_LM_RESP	Port 0 Link Maintenance Response CSR
02D0 1148	SP0_ACKID_STAT	Port 0 Local AckID Status CSR
02D0 114C - 02D0 1154	-	Reserved
02D0 1158	SP0_ERR_STAT	Port 0 Error and Status CSR
02D0 115C	SP0_CTL	Port 0 Control CSR
02D0 1160	SP1_LM_REQ	Port 1 Link Maintenance Request CSR
02D0 1164	SP1_LM_RESP	Port 1 Link Maintenance Response CSR
02D0 1168	SP1_ACKID_STAT	Port 1 Local AckID Status CSR
02D0 116C - 02D0 1174	-	Reserved
02D0 1178	SP1_ERR_STAT	Port 1 Error and Status CSR
02D0 117C	SP1_CTL	Port 1 Control CSR
02D0 1180	SP2_LM_REQ	Port 2 Link Maintenance Request CSR
02D0 1184	SP2_LM_RESP	Port 2 Link Maintenance Response CSR

Copyright © 2008–2011, Texas Instruments Incorporated

Table 7-79. RapidIO Control Registers (continued)

HEX ADDRESS	ACRONYM	REGISTER NAME
02D0 1188	SP2_ACKID_STAT	Port 2 Local AckID Status CSR
02D0 118C - 02D0 1194	-	Reserved
02D0 1198	SP2_ERR_STAT	Port 2 Error and Status CSR
02D0 119C	SP2_CTL	Port 2 Control CSR
02D0 11A0	SP3_LM_REQ	Port 3 Link Maintenance Request CSR
02D0 11A4	SP3_LM_RESP	Port 3 Link Maintenance Response CSR
02D0 11A8	SP3_ACKID_STAT	Port 3 Local AckID Status CSR
02D0 11AC - 02D0 11B4	-	Reserved
02D0 11B8	SP3_ERR_STAT	Port 3 Error and Status CSR
02D0 11BC	SP3_CTL	Port 3 Control CSR
02D0 11C0 - 02D0 1FFC	-	Reserved
02D0 2000	ERR_RPT_BH	Error Reporting Block Header
02D0 2004	-	Reserved
02D0 2008	ERR_DET	Logical/Transport Layer Error Detect CSR
02D0 200C	ERR_EN	Logical/Transport Layer Error Enable CSR
02D0 2010	H_ADDR_CAPT	Logical/Transport Layer High Address Capture CSR
02D0 2014	ADDR_CAPT	Logical/Transport Layer Address Capture CSR
02D0 2018	ID_CAPT	Logical/Transport Layer Device ID Capture CSR
02D0 201C	CTRL_CAPT	Logical/Transport Layer Control Capture CSR
02D0 2020 - 02D0 2024	-	Reserved
02D0 2028	PW_TGT_ID	Port-Write Target Device ID CSR
02D0 202C - 02D0 203C	-	Reserved
02D0 2040	SP0_ERR_DET	Port 0 Error Detect CSR
02D0 2044	SP0_RATE_EN	Port 0 Error Enable CSR
02D0 2048	SP0_ERR_ATTR_CAPT_DBG0	Port 0 Attributes Error Capture CSR 0
02D0 204C	SP0_ERR_CAPT_DBG1	Port 0 Packet/Control Symbol Error Capture CSR 1
02D0 2050	SP0_ERR_CAPT_DBG2	Port 0 Packet/Control Symbol Error Capture CSR 2
02D0 2054	SP0_ERR_CAPT_DBG3	Port 0 Packet/Control Symbol Error Capture CSR 3
02D0 2058	SP0_ERR_CAPT_DBG4	Port 0 Packet/Control Symbol Error Capture CSR 4
02D0 205C - 02D0 2064	-	Reserved
02D0 2068	SP0_ERR_RATE	Port 0 Error Rate CSR 0
02D0 206C	SP0_ERR_THRESH	Port 0 Error Rate Threshold CSR
02D0 2070 - 02D0 207C	-	Reserved
02D0 2080	SP1_ERR_DET	Port 1 Error Detect CSR
02D0 2084	SP1_RATE_EN	Port 1 Error Enable CSR
02D0 2088	SP1_ERR_ATTR_CAPT_DBG0	Port 1 Attributes Error Capture CSR 0
02D0 208C	SP1_ERR_CAPT_DBG1	Port 1 Packet/Control Symbol Error Capture CSR 1
02D0 2090	SP1_ERR_CAPT_DBG2	Port 1 Packet/Control Symbol Error Capture CSR 2
02D0 2094	SP1_ERR_CAPT_DBG3	Port 1 Packet/Control Symbol Error Capture CSR 3
02D0 2098	SP1_ERR_CAPT_DBG4	Port 1 Packet/Control Symbol Error Capture CSR 4
02D0 209C - 02D0 20A4	-	Reserved
02D0 20A8	SP1_ERR_RATE	Port 1 Error Rate CSR
02D0 20AC	SP1_ERR_THRESH	Port 1 Error Rate Threshold CSR
02D0 20B0 - 02D0 20BC	-	Reserved
02D0 20C0	SP2_ERR_DET	Port 2 Error Detect CSR
02D0 20C4	SP2_RATE_EN	Port 2 Error Enable CSR
02D0 20C8	SP2_ERR_ATTR_CAPT_DBG0	Port 2 Attributes Error Capture CSR 0

Copyright © 2008–2011, Texas Instruments Incorporated

Table 7-79. RapidIO Control Registers (continued)

HEX ADDRESS	ACRONYM	REGISTER NAME
02D0 20CC	SP2_ERR_CAPT_DBG1	Port 2 Packet/Control Symbol Error Capture CSR 1
02D0 20D0	SP2_ERR_CAPT_DBG2	Port 2 Packet/Control Symbol Error Capture CSR 2
02D0 20D4	SP2_ERR_CAPT_DBG3	Port 2 Packet/Control Symbol Error Capture CSR 3
02D0 20D8	SP2_ERR_CAPT_DBG4	Port 2 Packet/Control Symbol Error Capture CSR 4
02D0 20E0 - 02D0 20E4	-	Reserved
02D0 20E8	SP2_ERR_RATE	Port 2 Error Rate CSR
02D0 20EC	SP2_ERR_THRESH	Port 2 Error Rate Threshold CSR
02D0 20F0 - 02D0 20FC	-	Reserved
02D0 2100	SP3_ERR_DET	Port 3 Error Detect CSR
02D0 2104	SP3_RATE_EN	Port 3 Error Enable CSR
02D0 2108	SP3_ERR_ATTR_CAPT_DBG0	Port 3 Attributes Error Capture CSR 0
02D0 210C	SP3_ERR_CAPT_DBG1	Port 3 Packet/Control Symbol Error Capture CSR 1
02D0 2110	SP3_ERR_CAPT_DBG2	Port 3 Packet/Control Symbol Error Capture CSR 2
02D0 2114	SP3_ERR_CAPT_DBG3	Port 3 Packet/Control Symbol Error Capture CSR 3
02D0 2118	SP3_ERR_CAPT_DBG4	Port 3 Packet/Control Symbol Error Capture CSR 4
02D0 211C - 02D0 2124	-	Reserved
02D0 2128	SP3_ERR_RATE	Port 3 Error Rate CSR
02D0 212C	SP3_ERR_THRESH	Port 3 Error Rate Threshold CSR
02D0 2130 - 02D1 1FFC	-	Reserved
02D1 2000	SP_IP_DISCOVERY_TIMER	Port IP Discovery Timer in 4x Mode
02D1 2004	SP_IP_MODE	Port IP Mode CSR
02D1 2008	IP_PRESCAL	Port IP Prescaler Register
02D1 200C	-	Reserved
02D1 2010	SP_IP_PW_IN_CAPT0	Port-Write-In Capture CSR Register 0
02D1 2014	SP_IP_PW_IN_CAPT1	Port-Write-In Capture CSR Register 1
02D1 2018	SP_IP_PW_IN_CAPT2	Port-Write-In Capture CSR Register 2
02D1 201C	SP_IP_PW_IN_CAPT3	Port-Write-In Capture CSR Register 3
02D1 2020 - 02D1 3FFC	-	Reserved
02D1 4000	SP0_RST_OPT	Port 0 Reset Option CSR
02D1 4004	SP0_CTL_INDEP	Port 0 Control Independent Register
02D1 4008	SP0_SILENCE_TIMER	Port 0 Silence Timer Register
02D1 400C	SP0_MULT_EVNT_CS	Port 0 Multicast-Event Control Symbol Request Register
02D1 4010	-	Reserved
02D1 4014	SP0_CS_TX	Port 0 Control Symbol Transmit Register
02D1 4018 - 02D1 40FC	-	Reserved
02D1 4100	SP1_RST_OPT	Port 1 Reset Option CSR
02D1 4104	SP1_CTL_INDEP	Port 1 Control Independent Register
02D1 4108	SP1_SILENCE_TIMER	Port 1 Silence Timer Register
02D1 410C	SP1_MULT_EVNT_CS	Port 1 Multicast-Event Control Symbol Request Register
02D1 4110	-	Reserved
02D1 4114	SP1_CS_TX	Port 1 Control Symbol Transmit Register
02D1 4118 - 02D1 42FC	-	Reserved
02D1 4200	SP2_RST_OPT	Port 2 Reset Option CSR
02D1 4204	SP2_CTL_INDEP	Port 2 Control Independent Register
02D1 4208	SP2_SILENCE_TIMER	Port 2 Silence Timer Register
02D1 420C	SP2_MULT_EVNT_CS	Port 2 Multicast-Event Control Symbol Request Register
02D1 4210	-	Reserved

Copyright © 2008–2011, Texas Instruments Incorporated

Table 7-79. RapidIO Control Registers (continued)

HEX ADDRESS	ACRONYM	REGISTER NAME
02D1 4214	SP2_CS_TX	Port 2 Control Symbol Transmit Register
02D1 4218 - 02D1 42FC	-	Reserved
02D1 4300	SP3_RST_OPT	Port 3 Reset Option CSR
02D1 4304	SP3_CTL_INDEP	Port 3 Control Independent Register
02D1 4308	SP3_SILENCE_TIMER	Port 3 Silence Timer Register
02D1 430C	SP3_MULT_EVNT_CS	Port 3 Multicast-Event Control Symbol Request Register
02D1 4310	-	Reserved
02D1 4314	SP3_CS_TX	Port 3 Control Symbol Transmit Register
02D1 4318 - 02D2 0FFF	-	Reserved
02D2 1000 - 02DF FFFF	-	Reserved

7.18.3 Serial RapidIO Electrical Data/Timing

Serial RapidIO is electrically compliant with the *RapidIO™ Interconnect Specification, Part VI: Physical Layer 1x/4x LP-Serial Specification, Revision 1.2*.

Table 7-80. Timing Requirements for SRIOSGMIIREFCLK(N|P)(1)

(see Figure 7-43)

NO.	PARAMETERS		MIN	MAX	UNIT
1	$t_{c(SRIOSGMIIREFCLK)}$	Cycle time, SRIOSGMIIREFCLK(N|P)	3.2	8	ns
2	$t_{w(CLKH)}$	Pulse duration, CLK(N|P) high	0.4C		ns
3	$t_{w(CLKL)}$	Pulse duration, CLK(N|P) low	0.4C		ns
4	$t_{t(CLK)}$	Transition time, CLK(N|P)	50	1300	ps
5	$t_{j(CLK)}$	Period Jitter (RMS), CLK(N|P)		4	ps

(1) C=1/SRIOSGMIIREFCLK(N|P)

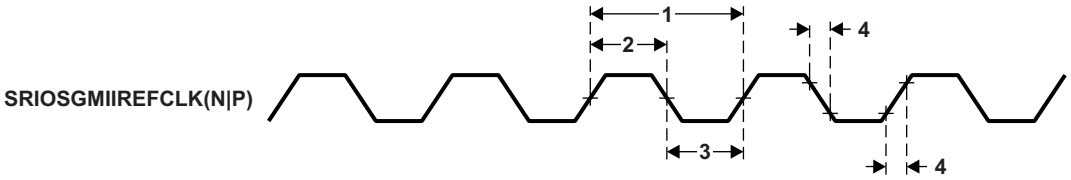

Figure 7-43. SRIOSGMIIREFCLK(N|P) Timing

7.19 General Purpose Input/Output (GPIO)

On the C6474 device, the GPIO peripheral pins GP[11:0] are used to latch configuration pins. These pins are sampled at power-on reset and are functional as GPIO pins the remainder of the time. For more detailed information on device/peripheral configuration and the C6474 device pin muxing, see Section 3, *Device Configuration*.

7.19.1 GPIO Peripheral Register Description(s)

Table 7-81. GPIO Registers

HEX ADDRESS	ACRONYM	REGISTER NAME
02B0 0008	BINTEN	GPIO Interrupt per Bank Enable Register
02B0 000C	-	Reserved
02B0 0010	DIR	GPIO Direction Register
02B0 0014	OUT_DATA	GPIO Output Data Register
02B0 0018	SET_DATA	GPIO Set Data Register
02B0 001C	CLR_DATA	GPIO Clear Data Register
02B0 0020	IN_DATA	GPIO Input Data Register
02B0 0024	SET_RIS_TRIG	GPIO Set Rising Edge Interrupt Register
02B0 0028	CLR_RIS_TRIG	GPIO Clear Rising Edge Interrupt Register
02B0 002C	SET_FAL_TRIG	GPIO Set Falling Edge Interrupt Register
02B0 0030	CLR_FAL_TRIG	GPIO Clear Falling Edge Interrupt Register
02B0 008C	-	Reserved
02B0 0090 - 02B0 00FF	-	Reserved
02B0 0100 - 02B0 3FFF	-	Reserved

7.19.2 GPIO Electrical Data/Timing

Table 7-82. Timing Requirements for GPIO Inputs(1)

(see Figure 7-44)

NO.	PARAMETER		MIN	MAX	UNIT
1	$t_{w(GPIH)}$	Pulse duration, GPIx high	12C - 3		ns
2	$t_{w(GPIL)}$	Pulse duration, GPIx low	12C - 3		ns

(1) C = 1/CPU CLK frequency, in ns.

Table 7-83. Switching Characteristics Over Recommended Operating Conditions for GPIO Outputs(1)

(see Figure 7-44)

NO.	PARAMETER		MIN	MAX	UNIT
1	$t_{w(GPOH)}$	Pulse duration, GPOx high	36C - 8		ns
2	$t_{w(GPOL)}$	Pulse duration, GPOx low	36C - 8		ns

(1) C = 1/CPU CLK frequency, in ns.

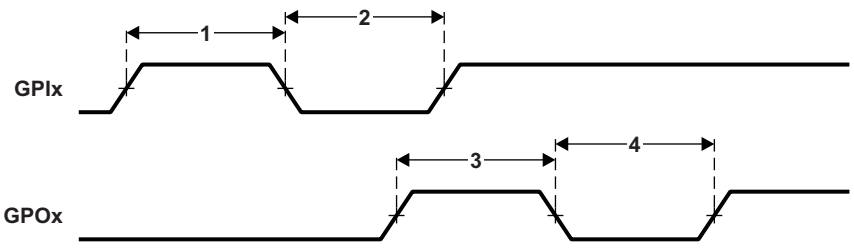

Figure 7-44. GPIO Timing

Copyright © 2008–2011, Texas Instruments Incorporated

7.20 Emulation Features and Capability

7.20.1 Advanced Event Triggering (AET)

The C6474 device supports Advanced Event Triggering (AET). This capability can be used to debug complex problems as well as understand performance characteristics of user applications. AET provides the following capabilities:

- **Hardware Program Breakpoints:** specify addresses or address ranges that can generate events such as halting the processor or triggering the trace capture.
- **Data Watchpoints:** specify data variable addresses, address ranges, or data values that can generate events such as halting the processor or triggering the trace capture.
- **Counters:** count the occurrence of an event or cycles for performance monitoring.
- **State Sequencing:** allows combinations of hardware program breakpoints and data watchpoints to precisely generate events for complex sequences.

For more information on AET, see the following documents:

Using Advanced Event Triggering to Find and Fix Intermittent Real-Time Bugs application report (literature number SPRA753)

Using Advanced Event Triggering to Debug Real-Time Problems in High Speed Embedded Microprocessor Systems application report (literature number SPRA387)

7.20.2 Trace

The C6474 device supports Trace. Trace is a debug technology that provides a detailed, historical account of application code execution, timing, and data accesses. Trace collects, compresses, and exports debug information for analysis. Trace works in real-time and does not impact the execution of the system.

For more information on board design guidelines for Trace Advanced Emulation, see the *60-Pin Emulation Header Technical Reference* (literature number SPRU655).

Table 7-84. Timing Requirements for Trace

(see Figure 7-45)

NO.	PARAMETER		MIN	MAX	UNITS
1	$t_{w(EMUnH)}$	Pulse duration, EMUn high	3 - 0.6(1)		ns
1	$t_{w(EMUnH)}$ 90%	Pulse duration, EMUn high detected at 90% V_{OH}	1.5		ns
1a	$t_{w(TCKH)}$	Pulse width time TCK high	8		ns
1b	$t_{w(TCKL)}$	Pulse width time TCK low	8		ns
2	$t_{w(EMUnL)}$	Pulse duration, EMUn low	3 - 0.6(1)		ns
2	$t_{w(EMUnL)}$ 10%	Pulse duration, EMUn low detected at 10% V_{OH}	1.5		ns
3	$t_{sko(EMUn)}$	Output Skew time, time delay difference between EMU pins configured as trace.	-500	500	ps
4	$t_{skp(EMUn)}$	Pulse Skew, magnitude of time difference between high-to-low (T_{PHL}) and low-to-high (T_{PLH}) propagation delays.		600(1)	ps

(1) This parameter applies to the maximum trace export frequency operating in a 40/60 duty cycle.

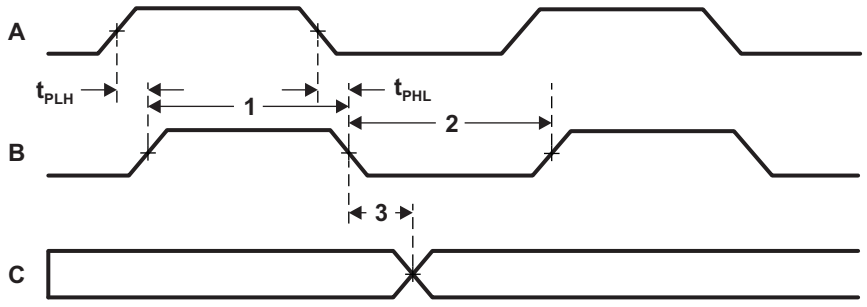

Figure 7-45. Trace Timing

Copyright © 2008–2011, Texas Instruments Incorporated

7.20.3 IEEE 1149.1 JTAG

The JTAG interface is used to support boundary scan and emulation of the device. The boundary scan supported allows for an asynchronous $\overline{\text{TRST}}$ and only the 5 baseline JTAG signals (e.g. no EMU[1:0]) required for boundary scan. Most interfaces on the device follow the Boundary Scan Test Specification (IEEE1149.1), while all of the SerDes (Antenna Interface, RapidIO, and SGMII) support the AC coupled net test defined in AC Coupled Net Test Specification (IEEE1149.6).

It is expected that all compliant devices are connected through the same JTAG interface, in daisy-chain fashion, as per the specification. The JTAG interface uses 1.8-V buffers, compliant with the *Power Supply Voltage and Interface Standard for Nonterminated Digital Integrated Circuit Specification (EAI/JESD8-5)*.

7.20.3.1 IEEE 1149.1 JTAG Compatibility Statement

For maximum reliability, the C6474 DSP includes an internal pulldown (IPD) on the $\overline{\text{TRST}}$ pin to ensure that $\overline{\text{TRST}}$ will always be asserted upon power up and the DSP's internal emulation logic will always be properly initialized when this pin is not routed out. JTAG controllers from Texas Instruments actively drive $\overline{\text{TRST}}$ high. However, some third-party JTAG controllers may not drive $\overline{\text{TRST}}$ high but expect the use of an external pullup resistor on $\overline{\text{TRST}}$. When using this type of JTAG controller, assert $\overline{\text{TRST}}$ to initialize the DSP after powerup and externally drive $\overline{\text{TRST}}$ high before attempting any emulation or boundary scan operations.

7.20.3.2 JTAG Electrical Data/Timing

Table 7-85. Timing Requirements for JTAG

(see Figure 7-46)

NO.	PARAMETER		MIN	MAX	UNITS
1	$t_{c(TCK)}$	Cycle time, TCK	20		ns
1a	$t_{w(TCKH)}$	Pulse width time TCK high	8		ns
1b	$t_{w(TCKL)}$	Pulse width time TCK low	8		ns
2	$t_{d(TCKL-TDOV)}$	Delay time, TCK low to TDO valid	0	8	ns
3a	$t_{su(TDIV-TCKH)}$	Setup time, TDI valid before TCK high	2		ns
3b	$t_{su(TMSV-TCKH)}$	Setup time, TMS valid before TCK high	2		ns
4a	$t_{h(TCKH-TDIV)}$	Hold time, TDI valid after TCK high	10		ns
4b	$t_{h(TCKH-TMSV)}$	Hold time, TMS valid after TCK high	10		ns

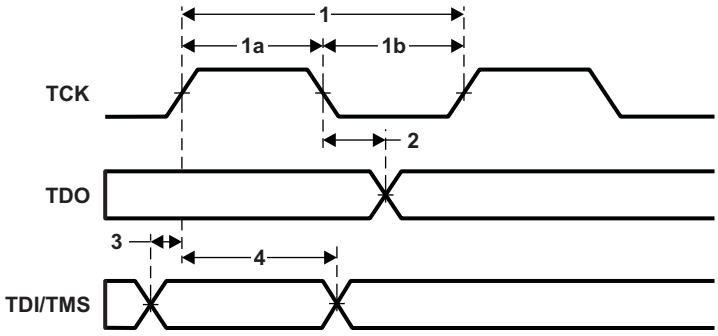

Figure 7-46. JTAG Timing

Table 7-86. Timing Requirements for HS-RTDX

(see Figure 7-47)

NO.	PARAMETER		MIN	MAX	UNITS
1	$t_{c(TCK)}$	Cycle time, TCK	20		ns
2	$t_{su(TCKH-EMUn)}$	Setup time, EMUn input valid before TCK high	1.5		ns
3	$t_{h(TCKH-EMUn)}$	Hold time, EMUn input valid after TCK high	1.5		ns
4	$t_{d(TCKH-EMUn)}$	Delay time, TCK high to EMUn output valid	3	16.5	ns
5	$t_{poz(EMUn)}$	Propagation delay from output to high impedance	3	16.5	ns
6	$t_{pzo\ (EMUn)}$	Propagation delay from high impedance to output	3	16.5	ns

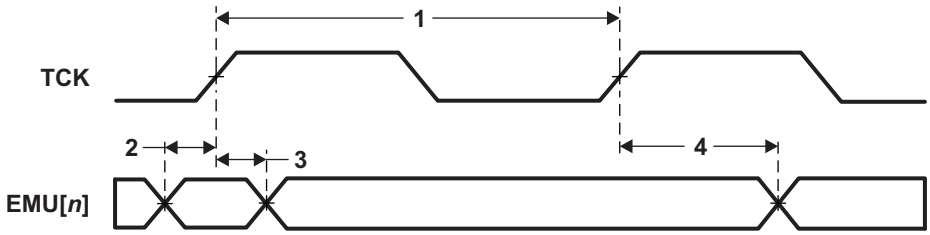

Figure 7-47. HS-RTDX Timing

Copyright © 2008–2011, Texas Instruments Incorporated

7.21 Semaphore

The device contains the Semaphore module for the management of shared resources of the DSP cores. The Semaphore enforces atomic accesses to shared chip-level resources so that the read-modify-write sequence is not broken. The semaphore block has unique interrupts to each of the cores to identify when that core has acquired the resource.

Semaphore resources within the module are not tied to specific hardware resources. It is a software requirement to allocate semaphore resources to the hardware resource(s) to be arbitrated.

The Semaphore module supports 3 masters and contains 32 semaphores to be used within the system. There are two methods of accessing a semaphore resource:

- Direct Access: A core directly accesses a semaphore resource. If free, the semaphore will be granted. If not, the semaphore is not granted.
- Indirect Access: A core indirectly accesses a semaphore resource by writing it. Once it is free, an interrupt notifies the CPU that it is available.

7.21.1 Semaphore Register Description(s)

Table 7-87. Semaphore Registers

HEX ADDRESS	ACRONYM	REGISTER NAME
02B4 0000	SEM_PID	Semaphore Peripheral Revision ID Register
02B4 000C	SEM_EOI	Semaphore EOI Register
02B4 0100	SEM_DIRECT0	Semaphore Direct0 Register
02B4 0104	SEM_DIRECT1	Semaphore Direct1 Register
02B4 0108	SEM_DIRECT2	Semaphore Direct2 Register
02B4 010C	SEM_DIRECT3	Semaphore Direct3 Register
02B4 0110	SEM_DIRECT4	Semaphore Direct4 Register
02B4 0114	SEM_DIRECT5	Semaphore Direct5 Register
02B4 0118	SEM_DIRECT6	Semaphore Direct6 Register
02B4 011C	SEM_DIRECT7	Semaphore Direct7 Register
02B4 0120	SEM_DIRECT8	Semaphore Direct8 Register
02B4 0124	SEM_DIRECT9	Semaphore Direct9 Register
02B4 0128	SEM_DIRECT10	Semaphore Direct10 Register
02B4 012C	SEM_DIRECT11	Semaphore Direct11 Register
02B4 0130	SEM_DIRECT12	Semaphore Direct12 Register
02B4 0134	SEM_DIRECT13	Semaphore Direct13 Register
02B4 0138	SEM_DIRECT14	Semaphore Direct14 Register
02B4 013C	SEM_DIRECT15	Semaphore Direct15 Register
02B4 0140	SEM_DIRECT16	Semaphore Direct16 Register
02B4 0144	SEM_DIRECT17	Semaphore Direct17 Register
02B4 0148	SEM_DIRECT18	Semaphore Direct18 Register
02B4 014C	SEM_DIRECT19	Semaphore Direct19 Register
02B4 0150	SEM_DIRECT20	Semaphore Direct20 Register
02B4 0154	SEM_DIRECT21	Semaphore Direct21 Register
02B4 0158	SEM_DIRECT22	Semaphore Direct22 Register
02B4 015C	SEM_DIRECT23	Semaphore Direct23 Register
02B4 0160	SEM_DIRECT24	Semaphore Direct24 Register
02B4 0164	SEM_DIRECT25	Semaphore Direct25 Register
02B4 0168	SEM_DIRECT26	Semaphore Direct26 Register
02B4 016C	SEM_DIRECT27	Semaphore Direct27 Register
02B4 0170	SEM_DIRECT28	Semaphore Direct28 Register

Copyright © 2008–2011, Texas Instruments Incorporated

Table 7-87. Semaphore Registers (continued)

HEX ADDRESS	ACRONYM	REGISTER NAME
02B4 0174	SEM_DIRECT29	Semaphore Direct29 Register
02B4 0178	SEM_DIRECT30	Semaphore Direct30 Register
02B4 017C	SEM_DIRECT31	Semaphore Direct31 Register
02B4 0200	SEM_INDIRECT0	Semaphore Indirect0 Register
02B4 0204	SEM_INDIRECT1	Semaphore Indirect1 Register
02B4 0208	SEM_INDIRECT2	Semaphore Indirect2 Register
02B4 020C	SEM_INDIRECT3	Semaphore Indirect3 Register
02B4 0210	SEM_INDIRECT4	Semaphore Indirect4 Register
02B4 0214	SEM_INDIRECT5	Semaphore Indirect5 Register
02B4 0218	SEM_INDIRECT6	Semaphore Indirect6 Register
02B4 021C	SEM_INDIRECT7	Semaphore Indirect7 Register
02B4 0220	SEM_INDIRECT8	Semaphore Indirect8 Register
02B4 0224	SEM_INDIRECT9	Semaphore Indirect9 Register
02B4 0228	SEM_INDIRECT10	Semaphore Indirect10 Register
02B4 022C	SEM_INDIRECT11	Semaphore Indirect11 Register
02B4 0230	SEM_INDIRECT12	Semaphore Indirect12 Register
02B4 0234	SEM_INDIRECT13	Semaphore Indirect13 Register
02B4 0238	SEM_INDIRECT14	Semaphore Indirect14 Register
02B4 023C	SEM_INDIRECT15	Semaphore Indirect15 Register
02B4 0240	SEM_INDIRECT16	Semaphore Indirect16 Register
02B4 0244	SEM_INDIRECT17	Semaphore Indirect17 Register
02B4 0248	SEM_INDIRECT18	Semaphore Indirect18 Register
02B4 024C	SEM_INDIRECT19	Semaphore Indirect19 Register
02B4 0250	SEM_INDIRECT20	Semaphore Indirect20 Register
02B4 0254	SEM_INDIRECT21	Semaphore Indirect21 Register
02B4 0258	SEM_INDIRECT22	Semaphore Indirect22 Register
02B4 025C	SEM_INDIRECT23	Semaphore Indirect23 Register
02B4 0260	SEM_INDIRECT24	Semaphore Indirect24 Register
02B4 0264	SEM_INDIRECT25	Semaphore Indirect25 Register
02B4 0268	SEM_INDIRECT26	Semaphore Indirect26 Register
02B4 026C	SEM_INDIRECT27	Semaphore Indirect27 Register
02B4 0270	SEM_INDIRECT28	Semaphore Indirect28 Register
02B4 0274	SEM_INDIRECT29	Semaphore Indirect29 Register
02B4 0278	SEM_INDIRECT30	Semaphore Indirect30 Register
02B4 027C	SEM_INDIRECT31	Semaphore Indirect31 Register
02B4 0300	SEM_QUERY0	Semaphore Query0 Register
02B4 0304	SEM_QUERY1	Semaphore Query1 Register
02B4 0308	SEM_QUERY2	Semaphore Query2 Register
02B4 030C	SEM_QUERY3	Semaphore Query3 Register
02B4 0310	SEM_QUERY4	Semaphore Query4 Register
02B4 0314	SEM_QUERY5	Semaphore Query5 Register
02B4 0318	SEM_QUERY6	Semaphore Query6 Register
02B4 031C	SEM_QUERY7	Semaphore Query7 Register
02B4 0320	SEM_QUERY8	Semaphore Query8 Register
02B4 0324	SEM_QUERY9	Semaphore Query9 Register
02B4 0328	SEM_QUERY10	Semaphore Query10 Register
02B4 032C	SEM_QUERY11	Semaphore Query11 Register

Copyright © 2008–2011, Texas Instruments Incorporated

Table 7-87. Semaphore Registers (continued)

HEX ADDRESS	ACRONYM	REGISTER NAME
02B4 0330	SEM_QUERY12	Semaphore Query12 Register
02B4 0334	SEM_QUERY13	Semaphore Query13 Register
02B4 0338	SEM_QUERY14	Semaphore Query14 Register
02B4 033C	SEM_QUERY15	Semaphore Query15 Register
02B4 0340	SEM_QUERY16	Semaphore Query16 Register
02B4 0344	SEM_QUERY17	Semaphore Query17 Register
02B4 0348	SEM_QUERY18	Semaphore Query18 Register
02B4 034C	SEM_QUERY19	Semaphore Query19 Register
02B4 0350	SEM_QUERY20	Semaphore Query20 Register
02B4 0354	SEM_QUERY21	Semaphore Query21 Register
02B4 0358	SEM_QUERY22	Semaphore Query22 Register
02B4 035C	SEM_QUERY23	Semaphore Query23 Register
02B4 0360	SEM_QUERY24	Semaphore Query24 Register
02B4 0364	SEM_QUERY25	Semaphore Query25 Register
02B4 0368	SEM_QUERY26	Semaphore Query26 Register
02B4 036C	SEM_QUERY27	Semaphore Query27 Register
02B4 0370	SEM_QUERY28	Semaphore Query28 Register
02B4 0374	SEM_QUERY29	Semaphore Query29 Register
02B4 0378	SEM_QUERY30	Semaphore Query30 Register
02B4 037C	SEM_QUERY31	Semaphore Query31 Register
02B4 0400	SEM_FLAG0	Semaphore Flag0 Register (for C64x+ Core0)
02B4 0404	SEM_FLAG1	Semaphore Flag1 Register (for C64x+ Core1)
02B4 0408	SEM_FLAG2	Semaphore Flag2 Register (for C64x+ Core2)
02B4 040C - 02B4 047C	Reserved	Reserved
02B4 0480	SEM_FLAG_SET0	Semaphore Flag Set0 Register (for C64x+ Core0)
02B4 0484	SEM_FLAG_SET1	Semaphore Flag Set1 Register (for C64x+ Core1)
02B4 0488	SEM_FLAG_SET2	Semaphore Flag Set2 Register (for C64x+ Core2)
02B4 048C - 02B4 04FF	Reserved	Reserved
02B4 0500	SEM_ERR	Semaphore Error Register
02B4 0504	SEM_ERR_CLR	Semaphore Error Clear Register
02B4 050C - 02B4 07FF	Reserved	Reserved

Copyright © 2008–2011, Texas Instruments Incorporated

7.22 Antenna Interface Subsystem

The Antenna Interface Subsystem (AIF) consists of the Antenna Interface module and two SERDES macros. The AIF relies on the performance SerDes macro (high-speed serial link) with a logic layer for the OBSAI RP3 and CPRI protocols. The AIF is used to connect to the backplane for transmission and reception of antenna data, as well as to additional device peripherals.

The AIF supports OBSAI/CPRI daisy chaining between DSPs:

- OBSAI - 768Mbps, 1.536Gbps, 3.072Gbps link rates supported
- CPRI - 614.4Mbps, 1.2288Gbps, 2.4576Gbps link rates supported

OBSAI and CPRI standards compliant antenna interface

- 6 configurable (Full Duplex) high-speed serial links in either OBSAI or CPRI modes that can support a variety of data rates:
- Supports star or daisy chain topologies.
- Each link can be used for uplink or downlink.
- Multiple slower links can be combined into faster speed links.
- Controls Word content supplied via DSP software.

The AIF is a slave peripheral, accepting all transactions from the DMA switch fabric, providing uplink data to device memory and transmitting downlink, delayed stream, and PIC data from device memory. Each link of the antenna interface includes a differential receive and transmit signal pair.

Table 7-88. AIF Receive and Transmit Signal Pairs

PIN NAMES	I/O	NUMBER	DESCRIPTION
AIFTXN [5:0]	OUT	6	Antenna Interface Links 0-5 Transmit (Neg) Data Lines.
AIFTXP [5:0]	OUT	6	Antenna Interface Links 0-5 Transmit (Pos) Data Lines.
AIFRXN [5:0]	IN	6	Antenna Interface Links 0-5 Receive (Neg) Data Lines.
AIFRXP [5:0]	IN	6	Antenna Interface Links 0-5 Receive (Pos) Data Lines.

7.22.1 Antenna Interface System (AIF) Register Description(s)

Table 7-89. Antenna Interface System Registers

HEX ADDRESS	ACRONYM	REGISTER NAME
02BC 0000	AIF_PD	AI Peripheral ID
02BC 0004	AIF_GLOBAL_CFG	AI Global Configuration
02BC 0008	AIF_EMU_CNTL	AI Emulation Control
02BC 000C	VC_BUS_ERR	VC Bus Error Register
02BC 0010 - 02BC 2FFC	-	Reserved
02BC 3000	CD_OUT_MUX_SEL_CFG	Combiner - Decombiner Output Mux Select Config Register 0
02BC 3004	CD_CB_SRC_SEL_CFG	Combiner Source Select Config Register
02BC 3008	CD_CB_OFFSET_CFG	Combiner Alignment Offset Config Register
02BC 300C	CD_CB_VALID_WIND_CFG	Combiner Valid Window Config Register
02BC 3010	CD_DC_SRC_SEL_CFG	Decombiner Source Select Config Register
02BC 3014	CD_DC_DST_SEL_CFG	Decombiner Destination Select Config Register
02BC 3018 - 02BC 307C	-	Reserved
02BC 3080	CD_STS	Combiner - Decombiner Status Register
02BC 3084 - 02BC 3FFC	-	Reserved
02BC 4000	LINK0_CFG	Link 0 Configuration Register
02BC 4004 - 02BC 47FC	-	Reserved
02BC 4800	LINK1_CFG	Link 1 Configuration Register

Copyright © 2008–2011, Texas Instruments Incorporated

Table 7-89. Antenna Interface System Registers (continued)

HEX ADDRESS	ACRONYM	REGISTER NAME
02BC 4804 - 02BC 4FFC	-	Reserved
02BC 5000	LINK2_CFG	Link 2 Configuration Register
02BC 5004 - 02BC 57FC	-	Reserved
02BC 5800	LINK3_CFG	Link 3 Configuration Register
02BC 5804 - 02BC 5FFC	-	Reserved
02BC 6000	LINK4_CFG	Link 4 Configuration Register
02BC 6004 - 02BC 67FC	-	Reserved
02BC 6800	LINK5_CFG	Link 5 Configuration Register
02BC 6804 - 02BC 6FFC		
02BC 7000	AIF_SERDES0_PLL_CFG	AI SerDes 0 PLL Configuration
02BC 7004	AIF_SERDES1_PLL_CFG	AI SerDes 1 PLL Configuration
02BC 7008	AIF_SERDES0_TST_CFG	AI SerDes 0 Test Configuration
02BC 700C	AIF_SERDES1_TST_CFG	AI SerDes 1 Test Configuration
02BC 7010 - 02BC 707C	-	Reserved
02BC 7080	SERDES_STS	SERDES Status Register
02BC 8000	RM_LINK0_CFG	RX MAC Link 0 Configuration Register
02BC 8004	RM_LINK0_PI_OFFSET_CFG	RX MAC Link 0 Pi Offset Register
02BC 8008	RM_LINK0_LOS_THOLD_CFG	RX MAC Link 0 LOS Threshold Register
02BC 8800	RM_LINK1_CFG	RX MAC Link 1 Configuration Register
02BC 8804	RM_LINK1_PI_OFFSET_CFG	RX MAC Link 1 Pi Offset Register
02BC 8808	RM_LINK1_LOS_THOLD_CFG	RX MAC Link 1 LOS Threshold Register
02BC 8880	RM_LINK_STSA	RX MAC Link Status Register A
02BC 8884	RM_LINK_STSB	RX MAC Link Status Register B
02BC 8888	RM_LINK_STSC	RX MAC Link Status Register C
02BC 888C	RM_LINK_STSD	RX MAC Link Status Register D
02BC 8890 - 02BC 8FFC	-	Reserved
02BC 9000	RM_LINK2_CFG	RX MAC Link 2 Configuration Register
02BC 9004	RM_LINK2_PI_OFFSET_CFG	RX MAC Link 2 Pi Offset Register
02BC 9008	RM_LINK2_LOS_THOLD_CFG	RX MAC Link 2 LOS Threshold Register
02BC 900C - 02BC 97FC	-	Reserved
02BC 9800	RM_LINK3_CFG	RX MAC Link 3 Configuration Register
02BC 9804	RM_LINK3_PI_OFFSET_CFG	RX MAC Link 3 Pi Offset Register
02BC 9808	RM_LINK3_LOS_THOLD_CFG	RX MAC Link 3 LOS Threshold Register
02BC 980C - 02BC 9FFC	-	Reserved
02BC A000	RM_LINK4_CFG	RX MAC Link 4 Configuration Register
02BC A008	RM_LINK4_LOS_THOLD_CFG	RX MAC Link 4 LOS Threshold Register
02BC A804	RM_LINK5_PI_OFFSET_CFG	RX MAC Link 5 Pi Offset Register
02BC A808	RM_LINK5_LOS_THOLD_CFG	RX MAC Link 5 LOS Threshold Register
02BC A80C - 02BC AFFC	-	Reserved
02BC B000	RM_ SYNC_CNT_CFG	RX MAC Common Sync Counter Register
02BC B004	RM_UNSYNC_CNT_CFG	RX MAC Unsync Count Configuration Register
02BC B008 - 02BC BFFC	-	Reserved
02BC C000	TM_LINK0_0CFG	TX MAC Link 0 Configuration Register 0
02BC C004	TM_LINK0_1CFG	TX MAC Link 0 Configuration Register 1
02BC C008	TM_LINK0_2CFG	TX MAC Link 0 Configuration Register 2
02BC C00C - 02BC C07C	-	Reserved
02BC C080	TM_LINK0_STS	TX MAC Link 0 Status Register

Copyright © 2008–2011, Texas Instruments Incorporated

Table 7-89. Antenna Interface System Registers (continued)

HEX ADDRESS	ACRONYM	REGISTER NAME
02BC C084 - 02BC C7FC		
02BC C800	TM_LINK1_0CFG	TX MAC Link 1 Configuration Register 0
02BC C804	TM_LINK1_1CFG	TX MAC Link 1 Configuration Register 1
02BC C808	TM_LINK1_2CFG	TX MAC Link 1 Configuration Register 2
02BC C80C - 02BC C87C	-	Reserved
02BC C880	TM_LINK1_STS	TX MAC Link 1 Status Register
02BC C884 - 02BC CFFC	-	Reserved
02BC D000	TM_LINK2_0CFG	TX MAC Link 2 Configuration Register 0
02BC D004	TM_LINK2_1CFG	TX MAC Link 2 Configuration Register 1
02BC D008	TM_LINK2_2CFG	TX MAC Link 2 Configuration Register 2
02BC D00C - 02BC D07C	-	Reserved
02BC D080	TM_LINK2_STS	TX MAC Link 2 Status Register
02BC D08C - 02BC D7FC	-	Reserved
02BC D800	TM_LINK3_0CFG	TX MAC Link 3 Configuration Register 0
02BC D804	TM_LINK3_1CFG	TX MAC Link 3 Configuration Register 1
02BC D808	TM_LINK3_2CFG	TX MAC Link 3 Configuration Register 2
02BC D80C - 02BC D87C	-	Reserved
02BC D880	TM_LINK3_STS	TX MAC Link 3 Status Register
02BC D884 - 02BC DFFC	-	Reserved
02BC E000	TM_LINK4_0CFG	TX MAC Link 4 Configuration Register 0
02BC E004	TM_LINK4_1CFG	TX MAC Link 4 Configuration Register 1
02BC E008	TM_LINK4_2CFG	TX MAC Link 4 Configuration Register 2
02BC E00C - 02BC E07C	-	Reserved
02BC E080	TM_LINK4_STS	TX MAC Link 4 Status Register
02BC E084 - 02BC E7FC	-	Reserved
02BC E800	TM_LINK5_0CFG	TX MAC Link 5 Configuration Register 0
02BC E804	TM_LINK5_1CFG	TX MAC Link 5 Configuration Register 1
02BC E808	TM_LINK5_2CFG	TX MAC Link 5 Configuration Register 2
02BC E80C - 02BC E87C	-	Reserved
02BC E880	TM_LINK5_STS	TX MAC Link 5 Status Register
02BC E884 - 02BC FFFC	-	Reserved
02BD 0000 - 02BD 3FFC	-	Reserved
02BD 4000	AG_LINK0_CFG	AG Link 0 Configuration Register
02BD 4004	AG_LINK0_STS	AG Link 0 Status Register
02BD 4008	AG_LINK0_HDR_ERR_STSA	AG Link 0 Header Error Status Register 0
02BD 400C	AG_LINK0_HDR_ERR_STSB	AG Link 0 Header Error Status Register 1
02BD 4010	AG_LINK0_HDR_ERR_STSC	AG Link 0 Header Error Status Register 2
02BD 4014	AG_LINK0_HDR_ERR_STSD	AG Link 0 Header Error Status Register 3
02BD 4018 - 02BD 47FC	-	Reserved
02BD 4800	AG_LINK1_CFG	AG Link 1 Configuration Register
02BD 4804	AG_LINK1_STS	AG Link 1 Status Register
02BD 4808	AG_LINK1_HDR_ERR_STSA	AG Link 1 Header Error Status Register 0
02BD 480C	AG_LINK1_HDR_ERR_STSB	AG Link 1 Header Error Status Register 1
02BD 4810	AG_LINK1_HDR_ERR_STSC	AG Link 1 Header Error Status Register 2
02BD 4814	AG_LINK1_HDR_ERR_STSD	AG Link 1 Header Error Status Register 3
02BD 4818 - 02BD 4FFC	-	Reserved
02BD 5000	AG_LINK2_CFG	AG Link 2 Configuration Register

Copyright © 2008–2011, Texas Instruments Incorporated

Table 7-89. Antenna Interface System Registers (continued)

HEX ADDRESS	ACRONYM	REGISTER NAME
02BD 5004	AG_LINK2_STS	AG Link 2 Status Register
02BD 5008	AG_LINK2_HDR_ERR_STSA	AG Link 2 Header Error Status Register 0
02BD 500C	AG_LINK2_HDR_ERR_STSB	AG Link 2 Header Error Status Register 1
02BD 5010	AG_LINK2_HDR_ERR_STSC	AG Link 2 Header Error Status Register 2
02BD 5014	AG_LINK2_HDR_ERR_STSD	AG Link 2 Header Error Status Register 3
02BD 5018 - 02BD 57FC	-	Reserved
02BD 5800	AG_LINK3_CFG	AG Link 3 Configuration Register
02BD 5804	AG_LINK3_STS	AG Link 3 Status Register
02BD 5808	AG_LINK3_HDR_ERR_STSA	AG Link 3 Header Error Status Register 0
02BD 580C	AG_LINK3_HDR_ERR_STSB	AG Link 3 Header Error Status Register 1
02BD 5810	AG_LINK3_HDR_ERR_STSC	AG Link 3 Header Error Status Register 2
02BD 5814	AG_LINK3_HDR_ERR_STSD	AG Link 3 Header Error Status Register 3
02BD 5818 - 02BD 5FFC	-	Reserved
02BD 6000	AG_LINK4_CFG	AG Link 4 Configuration Register
02BD 6004	AG_LINK4_STS	AG Link 4 Status Register
02BD 6008	AG_LINK4_HDR_ERR_STSA	AG Link 4 Header Error Status Register 0
02BD 600C	AG_LINK4_HDR_ERR_STSB	AG Link 4 Header Error Status Register 1
02BD 6010	AG_LINK4_HDR_ERR_STSC	AG Link 4 Header Error Status Register 2
02BD 6014	AG_LINK4_HDR_ERR_STSD	AG Link 4 Header Error Status Register 3
02BD 6018 - 02BD 67FC	-	Reserved
02BD 6800	AG_LINK5_CFG	AG Link 5 Configuration Register
02BD 6804	AG_LINK5_STS	AG Link 5 Status Register
02BD 6808	AG_LINK5_HDR_ERR_STSA	AG Link 5 Header Error Status Register 0
02BD 680C	AG_LINK5_HDR_ERR_STSB	AG Link 5 Header Error Status Register 1
02BD 6810	AG_LINK5_HDR_ERR_STSC	AG Link 5 Header Error Status Register 2
02BD 6814	AG_LINK5_HDR_ERR_STSD	AG Link 5 Header Error Status Register 3
02BD 6818 - 02BD 7FFC	-	Reserved
02BD 8000	CI_LINK0_CFG	CI Link 0 Configuration Register
02BD 8004 - 02BD 87FC	-	Reserved
02BD 8800	CI_LINK1_CFG	CI Link 1 Configuration Register
02BD 8804 - 02BD 8FFC	-	Reserved
02BD 9000	CI_LINK2_CFG	CI Link 2 Configuration Register
02BD 9004 - 02BD 97FC	-	Reserved
02BD 9800	CI_LINK3_CFG	CI Link 3 Configuration Register
02BD 9804 - 02BD 9FFC	-	Reserved
02BD A000	CI_LINK4_CFG	CI Link 4 Configuration Register
02BD A004 - 02BD A7FC	-	Reserved
02BD A800	CI_LINK5_CFG	CI Link 5 Configuration Register
02BD A804 - 02BD BFFC	-	Reserved
02BD C000	CO_LINK0_CFG	CO Link 0 Configuration Register
02BD C004 - 02BD C7FC	-	Reserved
02BD C800	CO_LINK1_CFG	CO Link 1 Configuration Register
02BD C804 - 02BD CFFC	-	Reserved
02BD D000	CO_LINK2_CFG	CO Link 2 Configuration Register
02BD D004 - 02BD D7FC	-	Reserved
02BD D800	CO_LINK3_CFG	CO Link 3 Configuration Register
02BD D804 - 02BD DFFC	-	Reserved

Copyright © 2008–2011, Texas Instruments Incorporated

Table 7-89. Antenna Interface System Registers (continued)

HEX ADDRESS	ACRONYM	REGISTER NAME
02BD E000	CO_LINK4_CFG	CO Link 4 Configuration Register
02BD E004 - 02BD E7FC	-	Reserved
02BD E800	CO_LINK5_CFG	CO Link 5 Configuration Register
02BD E804 - 02BE 3000	-	Reserved
02BE 3004	DB_GENERIC_CFG	Data Buffer Configuration Register
02BE 3008	DB_DMA_QUE_CLR_CFG	Data Buffer DMA Depth Clear Register
02BE 300C	DB_DMA_CNT_CLR_CFG	Data Buffer DMA Count Clear Register
02BE 3010	DB_OUT_PKTSW_EN_CFG	Data Buffer Outbound Packet Switched FIFO Enable Register
02BE 3014	DB_OUT_PKTSW_FLUSH_CFG	Data Buffer Inbound Packet Switched FIFO Flush Register
02BE 3018	DB_IN_FIFO_EVNT_CFG	Data Buffer Inbound Packet Switched FIFO Flush Register
02BE 301C	DB_IN_FIFO_SIZE_CFG	Data Buffer Inbound Packet Switched FIFO Depth Register
02BE 3020	DB_FORCE_SYSEVENT_CFG	Data Buffer Force System Events Register
02BE 3024	DB_OUTB_TRK_AUTOSYNC_CFG	Data Buffer PE Tracker Auto Sync Control Register
02BE 3028	DB_INB_TRK_AUTOSYNC_CFG	Data Buffer PD Tracker Auto Sync Control Register
02BE 302C - 02BE 303C	-	Reserved
02BE 3040	DB_IN_DMA_CNT0_STS	Data Buffer Inbound DMA Count 0 Register
02BE 3044	DB_IN_DMA_CNT1_STS	Data Buffer Inbound DMA Count 1 Register
02BE 3048	DB_IN_DMA_CNT2_STS	Data Buffer Inbound DMA Count 2 Register
02BE 304C	DB_OUT_DMA_CNT0_STS	Data Buffer Outbound DMA Count 0 Register
02BE 3050	DB_OUT_DMA_CNT1_STS	Data Buffer Outbound DMA Count 1 Register
02BE 3054	DB_OUT_DMA_CNT2_STS	Data Buffer Outbound DMA Count 2 Register
02BE 3058	DB_IN_DMA_DEPTH_STS	Data Buffer Inbound DMA Burst Available Register
02BE 305C	DB_OUT_DMA_DEPTH_STS	Data Buffer Outbound DMA Burst Available Register
02BE 3060	DB_OUT_PKTSW_STS	Data Buffer Outbound Packet Switched FIFO Status Register
02BE 3064	DB_OUT_PKTSW_DEPTH_STS	Data Buffer Outbound Packet Switched FIFO Depth Register
02BE 3068	DB_OUT_PKTSW_NE_STS	Data Buffer Outbound Packet Switched FIFO Not Empty Register
02BE 306C - 02BE 307C	-	Reserved
02BE 3080	DB_OUT_PKTSW_HEAD0_STS	Data Buffer Outbound Packet Switched FIFO0 Head Pointer
02BE 3084	DB_OUT_PKTSW_HEAD1_STS	Data Buffer Outbound Packet Switched FIFO1 Head Pointer
02BE 3088	DB_OUT_PKTSW_HEAD2_STS	Data Buffer Outbound Packet Switched FIFO2 Head Pointer
02BE 308C	DB_OUT_PKTSW_HEAD3_STS	Data Buffer Outbound Packet Switched FIFO3 Head Pointer
02BE 3090	DB_OUT_PKTSW_HEAD4_STS	Data Buffer Outbound Packet Switched FIFO4 Head Pointer
02BE 3094	DB_OUT_PKTSW_HEAD5_STS	Data Buffer Outbound Packet Switched FIFO5 Head Pointer
02BE 3098	DB_OUT_PKTSW_HEAD6_STS	Data Buffer Outbound Packet Switched FIFO6 Head Pointer
02BE 309C	DB_OUT_PKTSW_HEAD7_STS	Data Buffer Outbound Packet Switched FIFO7 Head Pointer
02BE 30A0	DB_OUT_PKTSW_HEAD8_STS	Data Buffer Outbound Packet Switched FIFO8 Head Pointer
02BE 30A4	DB_OUT_PKTSW_HEAD9_STS	Data Buffer Outbound Packet Switched FIFO9 Head Pointer

Copyright © 2008–2011, Texas Instruments Incorporated

Table 7-89. Antenna Interface System Registers (continued)

HEX ADDRESS	ACRONYM	REGISTER NAME
02BE 30A8	DB_OUT_PKTSW_HEAD10_STS	Data Buffer Outbound Packet Switched FIFO10 Head Pointer
02BE 30AC	DB_OUT_PKTSW_HEAD11_STS	Data Buffer Outbound Packet Switched FIFO11 Head Pointer
02BE 30B0	DB_OUT_PKTSW_HEAD12_STS	Data Buffer Outbound Packet Switched FIFO12 Head Pointer
02BE 30B4	DB_OUT_PKTSW_HEAD13_STS	Data Buffer Outbound Packet Switched FIFO13 Head Pointer
02BE 30B8	DB_OUT_PKTSW_HEAD14_STS	Data Buffer Outbound Packet Switched FIFO14 Head Pointer
02BE 30BC	-	Reserved
02BE 30C0	DB_OUT_PKTSW_TAIL0_STS	Data Buffer Outbound Packet Switched FIFO0 Tail Pointer
02BE 30C4	DB_OUT_PKTSW_TAIL1_STS	Data Buffer Outbound Packet Switched FIFO1 Tail Pointer
02BE 30C8	DB_OUT_PKTSW_TAIL2_STS	Data Buffer Outbound Packet Switched FIFO2 Tail Pointer
02BE 30CC	DB_OUT_PKTSW_TAIL3_STS	Data Buffer Outbound Packet Switched FIFO3 Tail Pointer
02BE 30D0	DB_OUT_PKTSW_TAIL4_STS	Data Buffer Outbound Packet Switched FIFO4 Tail Pointer
02BE 30D4	DB_OUT_PKTSW_TAIL5_STS	Data Buffer Outbound Packet Switched FIFO5 Tail Pointer
02BE 30D8	DB_OUT_PKTSW_TAIL6_STS	Data Buffer Outbound Packet Switched FIFO6 Tail Pointer
02BE 30DC	DB_OUT_PKTSW_TAIL7_STS	Data Buffer Outbound Packet Switched FIFO7 Tail Pointer
02BE 30E0	DB_OUT_PKTSW_TAIL8_STS	Data Buffer Outbound Packet Switched FIFO8 Tail Pointer
02BE 30E4	DB_OUT_PKTSW_TAIL9_STS	Data Buffer Outbound Packet Switched FIFO9 Tail Pointer
02BE 30E8	DB_OUT_PKTSW_TAIL10_STS	Data Buffer Outbound Packet Switched FIFO10 Tail Pointer
02BE 30EC	DB_OUT_PKTSW_TAIL11_STS	Data Buffer Outbound Packet Switched FIFO11 Tail Pointer
02BE 30F0	DB_OUT_PKTSW_TAIL12_STS	Data Buffer Outbound Packet Switched FIFO12 Tail Pointer
02BE 30F4	DB_OUT_PKTSW_TAIL13_STS	Data Buffer Outbound Packet Switched FIFO13 Tail Pointer
02BE 30F8	DB_OUT_PKTSW_TAIL14_STS	Data Buffer Outbound Packet Switched FIFO14 Tail Pointer
02BE 30FC - 02BE 3FFC	-	Reserved
02BE 4000	PD_LINK0_84CNT_LUT0_CFG	PD 84 Count Look-Up Table bits [31:0]
02BE 4004	PD_LINK0_84CNT_LUT1_CFG	PD 84 Count Look-Up Table bits [63:32]
02BE 4008	PD_LINK0_84CNT_LUT2_CFG	PD 84 Count Look-Up Table bits [83:64]
02BE 400C	PD_LINK0_CPRI_SI_LUT0_CFG	PD CPRI Stream Index LUT0 Register
02BE 4010	PD_LINK0_CPRI_SI_LUT1_CFG	PD CPRI Stream Index LUT1 Register
02BE 4014 - 02BE 47FC	-	Reserved
02BE 4800	PD_LINK1_84CNT_LUT0_CFG	PD 84 Count Look-Up Table bits [31:0]
02BE 4804	PD_LINK1_84CNT_LUT1_CFG	PD 84 Count Look-Up Table bits [63:32]
02BE 4808	PD_LINK1_84CNT_LUT2_CFG	PD 84 Count Look-Up Table bits [83:64]
02BE 480C	PD_LINK1_CPRI_SI_LUT0_CFG	PD CPRI Stream Index LUT0 Register
02BE 4810	PD_LINK1_CPRI_SI_LUT1_CFG	PD CPRI Stream Index LUT1 Register
02BE 4814 - 02BE 4FFC	-	Reserved
02BE 5000	PD_LINK2_84CNT_LUT0_CFG	PD 84 Count Look-Up Table bits [31:0]
02BE 5004	PD_LINK2_84CNT_LUT1_CFG	PD 84 Count Look-Up Table bits [63:32]
02BE 5008	PD_LINK2_84CNT_LUT2_CFG	PD 84 Count Look-Up Table bits [83:64]
02BE 500C	PD_LINK2_CPRI_SI_LUT0_CFG	PD CPRI Stream Index LUT0 Register
02BE 5010	PD_LINK2_CPRI_SI_LUT1_CFG	PD CPRI Stream Index LUT1 Register
02BE 5014 - 02BE 57FC	-	Reserved

Copyright © 2008–2011, Texas Instruments Incorporated

Table 7-89. Antenna Interface System Registers (continued)

HEX ADDRESS	ACRONYM	REGISTER NAME
02BE 5800	PD_LINK3_84CNT_LUT0_CFG	PD 84 Count Look-Up Table bits [31:0]
02BE 5804	PD_LINK3_84CNT_LUT1_CFG	PD 84 Count Look-Up Table bits [63:32]
02BE 5808	PD_LINK3_84CNT_LUT2_CFG	PD 84 Count Look-Up Table bits [83:64]
02BE 580C	PD_LINK3_CPRI_SI_LUT0_CFG	PD CPRI Stream Index LUT0 Register
02BE 5810	PD_LINK3_CPRI_SI_LUT1_CFG	PD CPRI Stream Index LUT1 Register
02BE 5814 - 02BE 5FFC	-	Reserved
02BE 6000	PD_LINK4_84CNT_LUT0_CFG	PD 84 Count Look-Up Table bits [31:0]
02BE 6004	PD_LINK4_84CNT_LUT1_CFG	PD 84 Count Look-Up Table bits [63:32]
02BE 6008	PD_LINK4_84CNT_LUT2_CFG	PD 84 Count Look-Up Table bits [83:64]
02BE 600C	PD_LINK4_CPRI_SI_LUT0_CFG	PD CPRI Stream Index LUT0 Register
02BE 6010	PD_LINK4_CPRI_SI_LUT1_CFG	PD CPRI Stream Index LUT1 Register
02BE 6014 - 02BE 67FC	-	Reserved
02BE 6800	PD_LINK5_84CNT_LUT0_CFG	PD 84 Count Look-Up Table bits [31:0]
02BE 6804	PD_LINK5_84CNT_LUT1_CFG	PD 84 Count Look-Up Table bits [63:32]
02BE 6808	PD_LINK5_84CNT_LUT2_CFG	PD 84 Count Look-Up Table bits [83:64]
02BE 680C	PD_LINK5_CPRI_SI_LUT0_CFG	PD CPRI Stream Index LUT0 Register
02BE 6810	PD_LINK5_CPRI_SI_LUT1_CFG	PD CPRI Stream Index LUT1 Register
02BE 6814 - 02BE 6FFC	-	Reserved
02BE 7000	PD_0_CFG	Protocol Decoder Configuration Register 0
02BE 7004	PD_1_CFG	Protocol Decoder Configuration Register 1
02BE 7008	PD_ADR_MUX_SEL_CFG	Protocol Decoder OBSAI Adr Mux Select Register
02BE 700C	PD_TYPE_CIR_LUT_CFG	Protocol Decoder Type CirSw Capture Enable LUT Register
02BE 7010	PD_TYPE_PKT_LUT_CFG	Protocol Decoder Type PktSw Capture Enable LUT Register
02BE 7014	PD_TYPE_ERR_LUT_CFG	Protocol Decoder Type Error Register
02BE 7018 - 02BE 77FC	-	Reserved
02BE 7800	PD_ADR_LUT	Protocol Decoder Address Look Up Table Register
02BE 7804 - 02BE 7FFC	-	Reserved
02BE 8000	PE_LINK0_84_EN_LUT0_CFG	PE 84 Count Message Enable bits [31:0]
02BE 8004	PE_LINK0_84_EN_LUT1_CFG	PE 84 Count Message Enable bits [63:32]
02BE 8008	PE_LINK0_84_EN_LUT2_CFG	PE 84 Count Message Enable bits [83:64]
02BE 800C	PE_LINK0_TERM_CNT01_CFG	PE Transmission Rule Terminal Count 0 and 1
02BE 8010	PE_LINK0_TERM_CNT23_CFG	PE Transmission Rule Terminal Count 2 and 3
02BE 8014 - 02BE 81FC	-	Reserved
02BE 8200 - 02BE 834C	PE_LINK0_84CNT_LUT	PE 84 Count LUT RAM
02BE 8350 - 02BE 83FC	-	Reserved
02BE 8400 - 02BE 8450	PE_LINK0_ID_LUT0	PE Identity LUT Part 0 RAM
02BE 8454 - 02BE 84FC	-	Reserved
02BE 8500 - 02BE 8550	PE_LINK0_ID_LUT1	PE Identity LUT Part 1 RAM
02BE 8554 - 02BE 87FC	-	Reserved
02BE 8800	PE_LINK1_84_EN_LUT0_CFG	PE 84 Count Message Enable bits [31:0]
02BE 8804	PE_LINK1_84_EN_LUT1_CFG	PE 84 Count Message Enable bits [63:32]
02BE 8808	PE_LINK1_84_EN_LUT2_CFG	PE 84 Count Message Enable bits [83:64]
02BE 880C	PE_LINK1_TERM_CNT01_CFG	PE Transmission Rule Terminal Count 0 and 1
02BE 8810	PE_LINK1_TERM_CNT23_CFG	PE Transmission Rule Terminal Count 2 and 3
02BE 8814 - 02BE 89FC	-	Reserved
02BE 8A00 - 02BE 8B4C	PE_LINK1_84CNT_LUT	PE 84 Count LUT RAM

Copyright © 2008–2011, Texas Instruments Incorporated

Table 7-89. Antenna Interface System Registers (continued)

HEX ADDRESS	ACRONYM	REGISTER NAME
02BE 8B50 - 02BE 8BFC	-	Reserved
02BE 8C00 - 02BE 8C50	PE_LINK1_ID_LUT0	PE Identity LUT Part 0 RAM
02BE 8C54 - 02BE 8CFC	-	Reserved
02BE 8D00 - 02BE 8D50	PE_LINK1_ID_LUT1	PE Identity LUT Part 1 RAM
02BE 8D54 - 02BE 8FFC	-	Reserved
02BE 9000	PE_LINK2_84_EN_LUT0_CFG	PE 84 Count message Enable bits [31: 0]
02BE 9004	PE_LINK2_84_EN_LUT1_CFG	PE 84 Count message Enable bits [63 : 32]
02BE 9008	PE_LINK2_84_EN_LUT2_CFG	PE 84 Count message Enable bits [83 : 64]
02BE 900C	PE_LINK2_TERM_CNT01_CFG	PE Transmission Rule Terminal Count 0 and 1
02BE 9010	PE_LINK2_TERM_CNT23_CFG	PE Transmission Rule Terminal Count 2 and 3
02BE 9014 - 02BE 91FC	-	Reserved
02BE 9200 - 02BE 934C	PE_LINK2_84CNT_LUT	PE 84 Count LUT RAM
02BE 9350 - 02BE 93FC	-	Reserved
02BE 9400 - 02BE 9450	PE_LINK2_ID_LUT0	PE Identity LUT Part 0 RAM
02BE 9454 - 02BE 94FC	-	Reserved
02BE 9500 - 02BE 9550	PE_LINK2_ID_LUT1	PE Identity LUT Part 1 RAM
02BE 9554 - 02BE 97FC	-	Reserved
02BE 9800	PE_LINK3_84_EN_LUT0_CFG	PE 84 Count message Enable bits [31:0]
02BE 9804	PE_LINK3_84_EN_LUT1_CFG	PE 84 Count message Enable bits [63:32]
02BE 9808	PE_LINK3_84_EN_LUT2_CFG	PE 84 Count message Enable bits [83:64]
02BE 980C	PE_LINK3_TERM_CNT01_CFG	PE Transmission Rule Terminal Count 0 and 1
02BE 9810	PE_LINK3_TERM_CNT23_CFG	PE Transmission Rule Terminal Count 2 and 3
02BE 9814 - 02BE 99FC	-	Reserved
02BE 9A00 - 02BE 9B4C	PE_LINK3_84CNT_LUT	PE 84 Count LUT RAM
02BE 9B50 - 02BE 9BFC	-	Reserved
02BE 9C00 - 02BE 9C50	PE_LINK3_ID_LUT0	PE Identity LUT Part 0 RAM
02BE 9C54 - 02BE 9CFC	-	Reserved
02BE 9D00 - 02BE 9D50	PE_LINK3_ID_LUT1	PE Identity LUT Part 1 RAM
02BE 9D54 - 02BE 9FFC	-	Reserved
02BE A000	PE_LINK4_84_EN_LUT0_CFG	PE 84 Count Message Enable bits [31:0]
02BE A004	PE_LINK4_84_EN_LUT1_CFG	PE 84 Count Message Enable bits [63:32]
02BE A008	PE_LINK4_84_EN_LUT2_CFG	PE 84 Count Message Enable bits [83:64]
02BE A00C	PE_LINK4_TERM_CNT01_CFG	PE Transmission Rule Terminal Count 0 and 1
02BE A010	PE_LINK4_TERM_CNT23_CFG	PE Transmission Rule Terminal Count 2 and 3
02BE A014 - 02BE A1FC	-	Reserved
02BE A200 - 02BE A34C	PE_LINK4_84CNT_LUT	PE 84 Count LUT RAM
02BE A350 - 02BE A3FC	-	Reserved
02BE A400 - 02BE A450	PE_LINK4_ID_LUT0	PE Identity LUT Part 0 RAM
02BE A454 - 02BE A4FC	-	Reserved
02BE A500 - 02BE A550	PE_LINK4_ID_LUT1	PE Identity LUT Part 1 RAM
02BE A554 - 02BE A7FC	-	Reserved
02BE A800	PE_LINK5_84_EN_LUT0_CFG	PE 84 Count Message Enable bits [31:0]
02BE A804	PE_LINK5_84_EN_LUT1_CFG	PE 84 Count Message Enable bits [63:32]
02BE A808	PE_LINK5_84_EN_LUT2_CFG	PE 84 Count Message Enable bits [83:64]
02BE A80C	PE_LINK5_TERM_CNT01_CFG	PE Transmission Rule Terminal Count 0 and 1
02BE A810	PE_LINK5_TERM_CNT23_CFG	PE Transmission Rule Terminal Count 2 and 3
02BE A814 - 02BE A9FC	-	Reserved

Copyright © 2008–2011, Texas Instruments Incorporated

Table 7-89. Antenna Interface System Registers (continued)

HEX ADDRESS	ACRONYM	REGISTER NAME
02BE AA00 - 02BE AB4C	PE_LINK5_84CNT_LUT	PE 84 Count LUT RAM
02BE AB50 - 02BE ABFC	-	Reserved
02BE AC00 - 02BE AC50	PE_LINK5_ID_LUT0	PE Identity LUT Part 0 RAM
02BE AC54 - 02BE ACFC	-	Reserved
02BE AD00 - 02BE AD50	PE_LINK5_ID_LUT1	PE Identity LUT Part 1 RAM
02BE AD54 - 02BE AFFC	-	Reserved
02BE B000	PE_CFG	Protocol Encoder Configuration Register
02BE B004 -02BE FFFC	-	Reserved
02BF 0000	EE_LINK0_IRS_A	EE Link 0 Interrupt Source Raw Status Register A
02BF 0004	EE_LINK0_IRS_B	EE Link 0 Interrupt Source Raw Status Register B
02BF 0008	EE_LINK0_IMS_A_EV0	EE Link 0 AI_EVENT[0] Interrupt Source Masked Status Register A
02BF 000C	EE_LINK0_IMS_B_EV0	EE Link 0 AI_EVENT[0] Interrupt Source Masked Status Register B
02BF 0010	EE_LINK0_IMS_A_EV1	EE Link 0 AI_EVENT[1] Interrupt Source Masked Status Register A
02BF 0014	EE_LINK0_IMS_B_EV1	EE Link 0 AI_EVENT[1] Interrupt Source Masked Status Register B
02BF 0018	EE_LINK0_MSK_SET_A_EV0	EE Link 0 AI_EVENT[0] Interrupt Source Mask Set Register A
02BF 001C	EE_LINK0_MSK_SET_B_EV0	EE Link 0 AI_EVENT[0] Interrupt Source Mask Set Register B
02BF 0020	EE_LINK0_MSK_SET_A_EV1	EE Link 0 AI_EVENT[1] Interrupt Source Mask Set Register A
02BF 0024	EE_LINK0_MSK_SET_B_EV1	EE Link 0 AI_EVENT[1] Interrupt Source Mask Set Register B
02BF 0028	EE_LINK0_MSK_CLR_A_EV0	EE Link 0 AI_EVENT[0] Interrupt Source Mask Clear Register A
02BF 002C	EE_LINK0_MSK_CLR_B_EV0	EE Link 0 AI_EVENT[0] Interrupt Source Mask ClearRegister B
02BF 0030	EE_LINK0_MSK_CLR_A_EV1	EE Link 0 AI_EVENT[1] Interrupt Source Mask Clear Register A
02BF 0034	EE_LINK0_MSK_CLR_B_EV1	EE Link 0 AI_EVENT[1] Interrupt Source Mask Clear Register B
02BF 0038 - 02BF 07FC	-	Reserved
02BF 0800	EE_LINK1_IRS_A	EE Link 1 Interrupt Source Raw Status Register A
02BF 0804	EE_LINK1_IRS_B	EE Link 1 Interrupt Source Raw Status Register B
02BF 0808	EE_LINK1_IMS_A_EV0	EE Link 1 AI_EVENT[0] Interrupt Source Masked Status Register A
02BF 080C	EE_LINK1_IMS_B_EV0	EE Link 1 AI_EVENT[0] Interrupt Source Masked Status Register B
02BF 0810	EE_LINK1_IMS_A_EV1	EE Link 1 AI_EVENT[1] Interrupt Source Masked Status Register A
02BF 0814	EE_LINK1_IMS_B_EV1	EE Link 1 AI_EVENT[1] Interrupt Source Masked Status Register B
02BF 0818	EE_LINK1_MSK_SET_A_EV0	EE Link 1 AI_EVENT[0] Interrupt Source Mask Set Register A
02BF 081C	EE_LINK1_MSK_SET_B_EV0	EE Link 1 AI_EVENT[0] Interrupt Source Mask Set Register B
02BF 0820	EE_LINK1_MSK_SET_A_EV1	EE Link 1 AI_EVENT[1] Interrupt Source Mask Set Register A
02BF 0824	EE_LINK1_MSK_SET_B_EV1	EE Link 1 AI_EVENT[1] Interrupt Source Mask Set RegisterB

Copyright © 2008–2011, Texas Instruments Incorporated

Table 7-89. Antenna Interface System Registers (continued)

HEX ADDRESS	ACRONYM	REGISTER NAME
02BF 0828	EE_LINK1_MSK_CLR_A_EV0	EE Link 1 AI_EVENT[0] Interrupt Source Mask Clear Register A
02BF 082C	EE_LINK1_MSK_CLR_B_EV0	EE Link 1 AI_EVENT[0] Interrupt Source Mask Clear Register B
02BF 0830	EE_LINK1_MSK_CLR_A_EV1	EE Link 1 AI_EVENT[1] Interrupt Source Mask Clear Register A
02BF 0834	EE_LINK1_MSK_CLR_B_EV1	EE Link 1 AI_EVENT[1] Interrupt Source Mask Clear Register B
02BF 0838 - 02BF 0FFC	-	Reserved
02BF 1000	EE_LINK2_IRS_A	EE Link 2 Interrupt Source Raw Status Register A
02BF 1004	EE_LINK2_IRS_B	EE Link 2 Interrupt Source Raw Status Register B
02BF 1008	EE_LINK2_IMS_A_EV0	EE Link 2 AI_EVENT[0] Interrupt Source Masked Status Register A
02BF 100C	EE_LINK2_IMS_B_EV0	EE Link 2 AI_EVENT[0] Interrupt Source Masked Status Register B
02BF 1010	EE_LINK2_IMS_A_EV1	EE Link 2 AI_EVENT[1] Interrupt Source Masked Status Register A
02BF 1014	EE_LINK2_IMS_B_EV1	EE Link 2 AI_EVENT[1] Interrupt Source Masked Status Register B
02BF 1018	EE_LINK2_MSK_SET_A_EV0	EE Link 2 AI_EVENT[0] Interrupt Source Mask Set Register A
02BF 101C	EE_LINK2_MSK_SET_B_EV0	EE Link 2 AI_EVENT[0] Interrupt Source Mask Set Register B
02BF 1020	EE_LINK2_MSK_SET_A_EV1	EE Link 2 AI_EVENT[1] Interrupt Source Mask Set Register A
02BF 1024	EE_LINK2_MSK_SET_B_EV1	EE Link 2 AI_EVENT[1] Interrupt Source Mask Set Register B
02BF 1028	EE_LINK2_MSK_CLR_A_EV0	EE Link 2 AI_EVENT[0] Interrupt Source Mask Clear Register A
02BF 102C	EE_LINK2_MSK_CLR_B_EV0	EE Link 2 AI_EVENT[0] Interrupt Source Mask Clear Register B
02BF 1030	EE_LINK2_MSK_CLR_A_EV1	EE Link 2 AI_EVENT[1] Interrupt Source Mask Clear Register A
02BF 1034	EE_LINK2_MSK_CLR_B_EV1	EE Link 2 AI_EVENT[1] Interrupt Source Mask Clear Register B
02BF 1038 - 02BF 17FC	-	Reserved
02BF 1800	EE_LINK3_IRS_A	EE Link 3 Interrupt Source Raw Status Register A
02BF 1804	EE_LINK3_IRS_B	EE Link 3 Interrupt Source Raw Status Register B
02BF 1808	EE_LINK3_IMS_A_EV0	EE Link 3 AI_EVENT[0] Interrupt Source Masked Status Register A
02BF 180C	EE_LINK3_IMS_B_EV0	EE Link 3 AI_EVENT[0] Interrupt Source Masked Status Register B
02BF 1810	EE_LINK3_IMS_A_EV1	EE Link 3 AI_EVENT[1] Interrupt Source Masked Status Register A
02BF 1814	EE_LINK3_IMS_B_EV1	EE Link 3 AI_EVENT[1] Interrupt Source Masked Status Register B
02BF 1818	EE_LINK3_MSK_SET_A_EV0	EE Link 3 AI_EVENT[0] Interrupt Source Mask Set Register A
02BF 181C	EE_LINK3_MSK_SET_B_EV0	EE Link 3 AI_EVENT[0] Interrupt Source Mask Set Register B
02BF 1820	EE_LINK3_MSK_SET_A_EV1	EE Link 3 AI_EVENT[1] Interrupt Source Mask Set Register A
02BF 1824	EE_LINK3_MSK_SET_B_EV1	EE Link 3 AI_EVENT[1] Interrupt Source Mask Set Register B

Copyright © 2008–2011, Texas Instruments Incorporated

Table 7-89. Antenna Interface System Registers (continued)

HEX ADDRESS	ACRONYM	REGISTER NAME
02BF 1828	EE_LINK3_MSK_CLR_A_EV0	EE Link 3 AI_EVENT[0] Interrupt Source Mask Clear Register A
02BF 182C	EE_LINK3_MSK_CLR_B_EV0	EE Link 3 AI_EVENT[0] Interrupt Source Mask Clear Register B
02BF 1830	EE_LINK3_MSK_CLR_A_EV1	EE Link 3 AI_EVENT[1] Interrupt Source Mask Clear Register A
02BF 1834	EE_LINK3_MSK_CLR_B_EV1	EE Link 3 AI_EVENT[1] Interrupt Source Mask Clear Register B
02BF 1838 - 02BF 1FFC	-	Reserved
02BF 2000	EE_LINK4_IRS_A	EE Link 4 Interrupt Source Raw Status Register A
02BF 2004	EE_LINK4_IRS_B	EE Link 4 Interrupt Source Raw Status Register B
02BF 2008	EE_LINK4_IMS_A_EV0	EE Link 4 AI_EVENT[0] Interrupt Source Masked Status Register A
02BF 200C	EE_LINK4_IMS_B_EV0	EE Link 4 AI_EVENT[0] Interrupt Source Masked Status Register B
02BF 2010	EE_LINK4_IMS_A_EV1	EE Link 4 AI_EVENT[1] Interrupt Source Masked Status Register A
02BF 2014	EE_LINK4_IMS_B_EV1	EE Link 4 AI_EVENT[1] Interrupt Source Masked Status Register B
02BF 2018	EE_LINK4_MSK_SET_A_EV0	EE Link 4 AI_EVENT[0] Interrupt Source Mask Set Register A
02BF 201C	EE_LINK4_MSK_SET_B_EV0	EE Link 4 AI_EVENT[0] Interrupt Source Mask Set Register B
02BF 2020	EE_LINK4_MSK_SET_A_EV1	EE Link 4 AI_EVENT[1] Interrupt Source Mask Set Register A
02BF 2024	EE_LINK4_MSK_SET_B_EV1	EE Link 4 AI_EVENT[1] Interrupt Source Mask Set Register B
02BF 2028	EE_LINK4_MSK_CLR_A_EV0	EE Link 4 AI_EVENT[0] Interrupt Source Mask Clear Register A
02BF 202C	EE_LINK4_MSK_CLR_B_EV0	EE Link 4 AI_EVENT[0] Interrupt Source Mask Clear Register B
02BF 2030	EE_LINK4_MSK_CLR_A_EV1	EE Link 4 AI_EVENT[1] Interrupt Source Mask Clear Register A
02BF 2034	EE_LINK4_MSK_CLR_B_EV1	EE Link 4 AI_EVENT[1] Interrupt Source Mask Clear Register B
02BF 2038 - 02BF 27FC	-	Reserved
02BF 2800 - 02BF 2FFC	-	Reserved
02BF 3000	EE_CFG	Exception Event Configuration Register
02BF 3004	EE_LINK_SEL_EV2A	Exception Event AI_EVENT[2] Link Select Register A
02BF 3008	EE_LINK_SEL_EV2B	Exception Event AI_EVENT[2] Link Select Register B
02BF 300C	EE_LINK_SEL_EV3A	Exception Event AI_EVENT[3] Link Select Register A
02BF 3010	EE_LINK_SEL_EV3B	Exception Event AI_EVENT[3] Link Select Register B
02BF 3014	EE_INT_END	Exception Event End of Interrupt Register
02BF 3018 - 02BF 307C	-	Reserved
02BF 3080	EE_AI_RUN	Event Enable AI Running Register
02BF 3084 - 02BF 30FC	-	Reserved
02BF 3100	EE_COMMON_IRS	Event Enable Common Interrupt Source Raw Status Register
02BF 3104	EE_COMMON_IMS_EV0	Event Enable Common Interrupt Event 0 Masked Status Register
02BF 3108	EE_COMMON_IMS_EV1	Event Enable Common Interrupt Event 1 Masked Status Register
02BF 310C	EE_EV2_LINK_IMS_A	Event Enable Event 2 Interrupt Source Masked Status Register A

Copyright © 2008–2011, Texas Instruments Incorporated

Table 7-89. Antenna Interface System Registers (continued)

HEX ADDRESS	ACRONYM	REGISTER NAME
02BF 3110	EE_EV2_LINK_IMS_B	Event Enable Event 2 Interrupt Source Masked Status Register B
02BF 3114	EE_COMMON_IMS_EV2	Event Enable Common Interrupt Event 2 Masked Status Register
02BF 3118	EE_EV3_LINK_IMS_A	Event Enable Event 3 Interrupt Source Masked Status Register A
02BF 311C	EE_EV3_LINK_IMS_B	Event Enable Event 3 Interrupt Source Masked Status Register B
02BF 3120	EE_COMMON_IMS_EV3	Event Enable Common Interrupt Event 3 Masked Status Register
02BF 3124	EE_COMMON_MSK_SET_EV0	Event Enable 0 Common Interrupt Mask Set Register
02BF 3128	EE_COMMON_MSK_SET_EV1	Event Enable 1 Common Interrupt Mask Set Register
02BF 312C	EE_EV2_LINK_MSK_SET_A	Event 2 Link Interrupt Source Mask Set Register A
02BF 3130	EE_EV2_LINK_MSK_SET_B	Event 2 Link Interrupt Source Mask Set Register B
02BF 3134	EE_COMMON_MSK_SET_EV2	Event Enable 2 Common Interrupt Mask Set Register
02BF 3138	EE_EV3_LINK_MSK_SET_A	Event 3 Link Interrupt Source Mask Set Register A
02BF 313C	EE_EV3_LINK_MSK_SET_B	Event 3 Link Interrupt Source Mask Set Register B
02BF 3140	EE_COMMON_MSK_SET_EV3	Event Enable 3 Common Interrupt Mask Set Register
02BF 3144	EE_COMMON_MSK_CLR_EV0	Event Enable 0 Common Interrupt Mask Clear Register
02BF 3148	EE_COMMON_MSK_CLR_EV1	Event Enable 1 Common Interrupt Mask Clear Register
02BF 314C	EE_EV2_LINK_MSK_CLR_A	Event 2 Link Interrupt Mask Clear Register A
02BF 3150	EE_EV2_LINK_MSK_CLR_B	Event 2 Link Interrupt Mask Clear Register B
02BF 3154	EE_COMMON_MSK_CLR_EV2	Event Enable 2 Common Interrupt Mask Clear Register
02BF 3158	EE_EV3_LINK_MSK_CLR_A	Event 3 Link Interrupt Mask Clear Register A
02BF 315C	EE_EV3_LINK_MSK_CLR_B	Event 3 Link Interrupt Mask Clear Register B
02BF 3160	EE_COMMON_MSK_CLR_EV3	Event Enable 3 Common Interrupt Mask Clear Register
02BF 3164 - 02BF 31FC	-	Reserved
02BF 3200	EE_INT_VECT_EV0	Event Enable Interrupt Vector Register for AI_EVENT0
02BF 3204	EE_INT_VECT_EV1	Event Enable Interrupt Vector Register for AI_EVENT1
02BF 3208	EE_INT_VECT_EV2	Event Enable Interrupt Vector Register for AI_EVENT2
02BF 320C	EE_INT_VECT_EV3	Event Enable Interrupt Vector Register for AI_EVENT3
02BF 3210 - 02BF BFFC	-	Reserved
02BF C000	VD_RD_BUSERR	VBUSP DMA Read Bus Interface Status Registers
02BF C004	VD_WR_BUSERR	VBUSP DMA Write Bus Interface Status Registers

7.22.2 Antenna Electrical Data/Timing

The *TMS320C6474 Hardware Design Guide* application report (literature number SPRAAW7) specifies a complete AIF interface solution for the C6474 device as well as a list of compatible AIF devices. TI has performed the simulation and system characterization to ensure all AIF interface timings in this solution are met; therefore, no electrical data/timing information is supplied here for this interface.

TI *only* supports designs that follow the board design guidelines outlined in the SPRAAW7 application report.

7.23 Frame Synchronization

Frame synchronization handles timing and time alignment on the device by coordinating timing between the DSP cores. Up to 30 programmable events based on RP3 or system timer. One output is used for exporting frame alignment to aid in synchronizing external components.

Frame synchronization assists with synchronization of clock inputs:

- OBSAI RP1 compliant input for frame burst data.
- UMTS frame synchronization boundary used as an alternative to RP1 for frame burst data.
- System timer synchronization used as an alternative to RP1.

The user may select between the OBSAI RP1-compliant FSYNCCLK(P|N) and FRAMEBURST(P|N) signals or the alternate, single-ended ALTFSYNCCLK and ALTFSYNCPULSE inputs to drive the timers.

Table 7-90. FSYNC Event Connections

MODULE EVENTS	C64x+ MEGAMODULE CORE 0	C64x+ MEGAMODULE CORE 1	C64x+ MEGAMODULE CORE 2	CIC0	CIC1	CIC2	TPCC	CIC3	TIMER	AIF
FSEVT0	X	X	X					X		
FSEVT1	X	X	X					X		X
FSEVT2	X	X	X					X	X	
FSEVT3	X	X	X					X	X	
FSEVT4	X	X	X				X			
FSEVT5	X	X	X				X			
FSEVT6	X	X	X				X			
FSEVT7	X	X	X				X			
FSEVT8	X	X	X				X			
FSEVT9	X	X	X				X			
FSEVT10	X	X	X				X			
FSEVT11	X	X	X				X			
FSEVT12	X	X	X				X			
FSEVT13	X	X	X				X			
FSEVT14	X	X	X					X		
FSEVT15	X	X	X					X		
FSEVT16	X	X	X					X		
FSEVT17	X	X	X					X		
FSEVT18				X	X	X		X		X
FSEVT19				X	X	X		X		X
FSEVT20				X	X	X		X		X
FSEVT21				X	X	X		X		X
FSEVT22				X	X	X		X		X
FSEVT23				X	X	X		X		X
FSEVT24				X	X	X				X
FSEVT25				X	X	X				X
FSEVT26				X	X	X				X
FSEVT27				X	X	X				X
FSEVT28				X	X	X				X
FSEVT29				X	X	X				X
FS_ERR_Alarm0				X	X	X				
FS_ERR_Alarm1				X	X	X				
FS_AIFFrameSync										X

Copyright © 2008–2011, Texas Instruments Incorporated

7.23.1 Frame Synchronization (FSYNC) Register Description(s)

Table 7-91. Frame Synchronization (FSYNC) Registers

HEX ADDRESS	ACRONYM	REGISTER NAME
0280 0000	PID	Peripheral Identification Register
0280 00A0	ERR_INT_MASK_1	FSYNC ERR INT MASK 1 Register
0280 00A4	ERR_INT_SET	FSYNC ERR INT SET Register
0280 00A8	ERR_INT_CLEAR	FSYNC ERR INT CLEAR Register
0280 00AC	ERR_END_OF_INT	FSYNC ERR END 0F INT Register
0280 00B0	SCRATCH	FSYNC Scratch Register
0280 00B4	CTL1	FSYNC Control Register 1
0280 00B8	CTL2	FSYNC Control Register 2
0280 00BC	EMUCTL	FSYNC Emulation Control Register
0280 00C0	EMUMASK	FSYNC Emulation Mask Register
0280 00C4	RP1TS	FSYNC RP1 Type Select Register
0280 00C8	UPDATE	FSYNC Update Register
0280 00CC	RP3INIT	FSYNC RP3 Init Register
0280 00D0	SYSINIT	FSYNC System Init Register
0280 0080	ERR_INT_SRC_RAW	FSYNC ERR INT SRC RAW Register
0280 0084	ERR_MASK_STAT_0	FSYNC ERR MASK STATUS 0 Register
0280 0088	ERR_MASK_STAT_1	FSYNC ERR MASK STATUS 1 Register
0280 008C	ERR_SET_MASK_0	FSYNC ERR SET MASK 0 Register
0280 0090	ERR_SET_MASK_1	FSYNC ERR SET MASK 1 Register
0280 0094	ERR_CLEAR_MASK_0	FSYNC ERR CLEAR MASK 0 Register
0280 0098	ERR_CLEAR_MASK_1	FSYNC ERR CLEAR MASK 1 Register
0280 009C	ERR_INT_MASK_0	FSYNC ERR INT MASK 0 Register
0280 0100	RP3TC	FSYNC RP3 Terminal Count Entry
0280 0128	TOD1	FSYNC TOD Capture Register 1
0280 012C	FSYNC_TOD2	FSYNC TOD Capture Register 2
0280 0130	RP31	FSYNC RP3 Capture Register 1
0280 0134	RP32	FSYNC RP3 Capture Register 2
0280 0138	SYS1	FSYNC SYS Capture Register 1
0280 013C	SYS2	FSYNC SYS Capture Register 2
0280 0140	SYSTC_RAM	FSYNC System Terminal Count Entry
0280 0168	SYSTC	FSYNC System Terminal Count Register
0280 016C	RP3TC	FSYNC RP3 Terminal Count Register
0280 0170	TYPE	FSYNC Type Capture Register
0280 0174	TODVAL	FSYNC TOD VAL Register
0280 0178	RP3VAL	FSYNC RP3 VAL Register
0280 017C	SYSVAL	FSYNC System VAL Register
0280 0200	EGMCTRL	FSYNC Mask Event Generator Control Register
0280 0258	EGCCTRL	FSYNC Counter Event Generator Control Register
0280 0280	EGMMASK	FSYNC Mask Event Generator Mask
0280 0300	EGMOFFSET	FSYNC Mask Event Generator Offset Value
0280 0358	EGMCTCOUNT	FSYNC Counter Event Generator Control Register
0280 0380	EVTFORCE	FSYNC Event Force Register

Copyright © 2008–2011, Texas Instruments Incorporated

7.23.2 FSYNC Electrical Data/Timing

Table 7-92. Timing Requirements for FSYNC

(see Figure 7-48, Figure 7-49, and Figure 7-50)

NO.	PARAMETER		MIN	MAX	UNIT
1	$t_{c(FSCLK)}$	Cycle time	8.1388		ns
2	$t_{c(FSCLK)}$	Pulse duration, ALTSYNCCLK high or low	0.4 $t_{c(FSCLK)}$	0.6 $t_{c(FSCLK)}$	ns
3	$t_{u(FSPLS)}$	Setup time, ALTFSYNCPULSE high before ALTFSYNCCLK high	2		ns
4	$t_{h(FSPLS)}$	Hold time, ALTFSYNCPULSE low after ALTFSYNCCLK high	2		ns
5	$t_{j(FSCLK)}$	Period Jitter (peak-to-peak) FSYNCCLK(N|P)		0.025 x t_c	ns

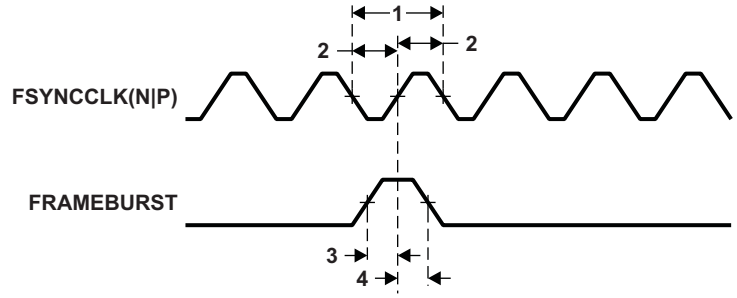

Figure 7-48. FSYNC Clock and Synchronization Timing

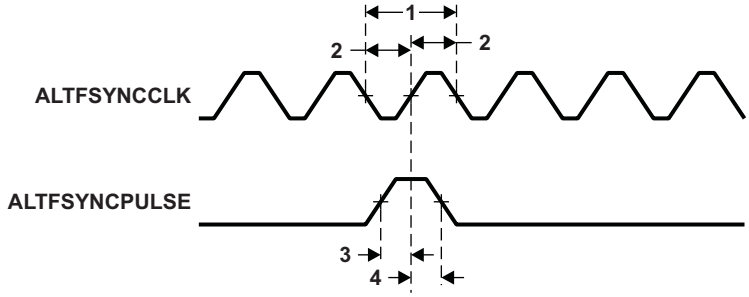

Figure 7-49. Alternate FSYNC Clock and Synchronization Timing

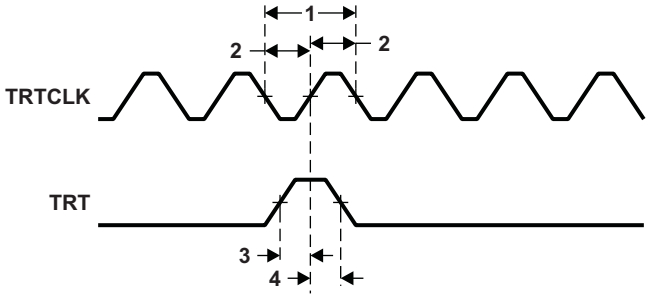

Figure 7-50. TRT Clock and Synchronization Timing

Copyright © 2008–2011, Texas Instruments Incorporated

Table 7-93. Switching Characteristics Over Recommended Operating Conditions for SMFRAMECLK(1)

(see Figure 7-51)

NO.	PARAMETER		MIN	MAX	UNIT
2	$t_{c(FSCLK)}$	Pulse duration, SMFRAMECLK high or low	4C		ns

(1) C = FSCLK.

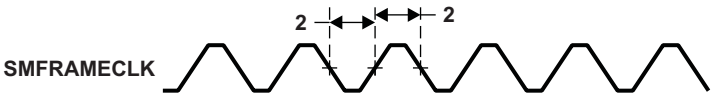

Figure 7-51. SMFRAMECLK Timing

8 Mechanical Data

8.1 Thermal Data

Table 8-1 shows the thermal resistance characteristics for the PBGA—CUN/GUN/ZUN—mechanical package.

Table 8-1. Thermal Resistance Characteristics (PBGA Package) [CUN/GUN/ZUN](1)

NO.	PARAMETER		°C/W	AIR FLOW (m/s)(2)
1	$R\Theta_{JC}$	Junction-to-case	0.30	N/A
2	$R\Theta_{JB}$	Junction-to-board	6.5	N/A

(1) A heatsink is required for proper device operation.
(2) m/s = meters per second

8.2 Packaging Information

The following packaging information reflects the most current released data available for the designated device(s). This data is subject to change without notice and without revision of this document.

Copyright © 2008–2011, Texas Instruments Incorporated

PACKAGING INFORMATION

Orderable part number	Status (1)	Material type (2)	Package | Pins	Package qty | Carrier	RoHS (3)	Lead finish/ Ball material (4)	MSL rating/ Peak reflow (5)	Op temp (°C)	Part marking (6)
TMS320C6474FCUN	Active	Production	FCCSP (CUN) | 561	60 | JEDEC TRAY (5+1)	Yes	SNAGCU	Level-4-245C-72HR	0 to 85	@2006 TI TMS320C6474CUN
TMS320C6474FCUN.A	Active	Production	FCCSP (CUN) | 561	60 | JEDEC TRAY (5+1)	Yes	SNAGCU	Level-4-245C-72HR	0 to 85	@2006 TI TMS320C6474CUN
TMS320C6474FCUN2	Active	Production	FCCSP (CUN) | 561	60 | JEDEC TRAY (5+1)	Yes	SNAGCU	Level-4-245C-72HR	0 to 85	@2006 TI TMS320C6474CUN 1.2GHZ
TMS320C6474FCUN2.A	Active	Production	FCCSP (CUN) | 561	60 | JEDEC TRAY (5+1)	Yes	SNAGCU	Level-4-245C-72HR	0 to 85	@2006 TI TMS320C6474CUN 1.2GHZ
TMS320C6474FCUN8	Active	Production	FCCSP (CUN) | 561	60 | JEDEC TRAY (5+1)	Yes	SNAGCU	Level-4-245C-72HR	0 to 85	@2006 TI TMS320C6474CUN 850MHZ
TMS320C6474FCUN8.A	Active	Production	FCCSP (CUN) | 561	60 | JEDEC TRAY (5+1)	Yes	SNAGCU	Level-4-245C-72HR	0 to 85	@2006 TI TMS320C6474CUN 850MHZ
TMS320C6474FCUNA2	Active	Production	FCCSP (CUN) | 561	60 | JEDEC TRAY (5+1)	Yes	SNAGCU	Level-4-245C-72HR	-40 to 95	@2006 TI TMS320C6474CUN A1.2GHZ
TMS320C6474FCUNA2.A	Active	Production	FCCSP (CUN) | 561	60 | JEDEC TRAY (5+1)	Yes	SNAGCU	Level-4-245C-72HR	-40 to 95	@2006 TI TMS320C6474CUN A1.2GHZ

(1) **Status:** For more details on status, see our product life cycle.

(2) **Material type:** When designated, preproduction parts are prototypes/experimental devices, and are not yet approved or released for full production. Testing and final process, including without limitation quality assurance, reliability performance testing, and/or process qualification, may not yet be complete, and this item is subject to further changes or possible discontinuation. If available for ordering, purchases will be subject to an additional waiver at checkout, and are intended for early internal evaluation purposes only. These items are sold without warranties of any kind.

(3) **RoHS values:** Yes, No, RoHS Exempt. See the TI RoHS Statement for additional information and value definition.

(4) **Lead finish/Ball material:** Parts may have multiple material finish options. Finish options are separated by a vertical ruled line. Lead finish/Ball material values may wrap to two lines if the finish value exceeds the maximum column width.

(5) **MSL rating/Peak reflow:** The moisture sensitivity level ratings and peak solder (reflow) temperatures. In the event that a part has multiple moisture sensitivity ratings, only the lowest level per JEDEC standards is shown. Refer to the shipping label for the actual reflow temperature that will be used to mount the part to the printed circuit board.

(6) **Part marking:** There may be an additional marking, which relates to the logo, the lot trace code information, or the environmental category of the part.

Multiple part markings will be inside parentheses. Only one part marking contained in parentheses and separated by a "~" will appear on a part. If a line is indented then it is a continuation of the previous line and the two combined represent the entire part marking for that device.

Important Information and Disclaimer: The information provided on this page represents TI's knowledge and belief as of the date that it is provided. TI bases its knowledge and belief on information provided by third parties, and makes no representation or warranty as to the accuracy of such information. Efforts are underway to better integrate information from third parties. TI has taken and continues to take reasonable steps to provide representative and accurate information but may not have conducted destructive testing or chemical analysis on incoming materials and chemicals. TI and TI suppliers consider certain information to be proprietary, and thus CAS numbers and other limited information may not be available for release.

In no event shall TI's liability arising out of such information exceed the total purchase price of the TI part(s) at issue in this document sold by TI to Customer on an annual basis.

ZUN (S–PBGA–N561) PLASTIC BALL GRID ARRAY

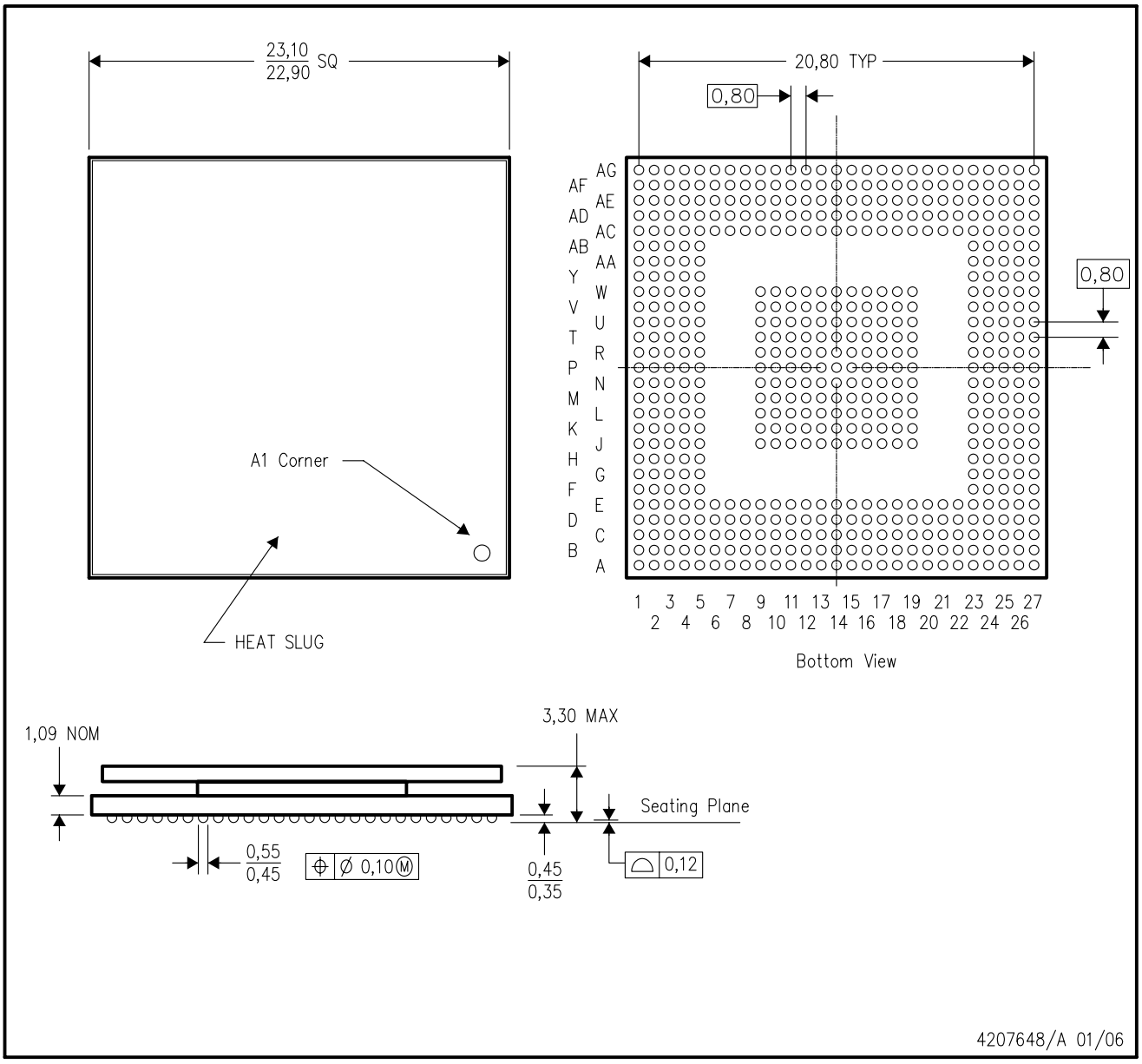

NOTES:
A. All linear dimensions are in millimeters.
B. This drawing is subject to change without notice.
C. Thermally enhanced plastic package with heat slug (HSL).
D. Flip chip application only.
E. This package is lead–free.

CUN (S–PBGA–N561) PLASTIC BALL GRID ARRAY

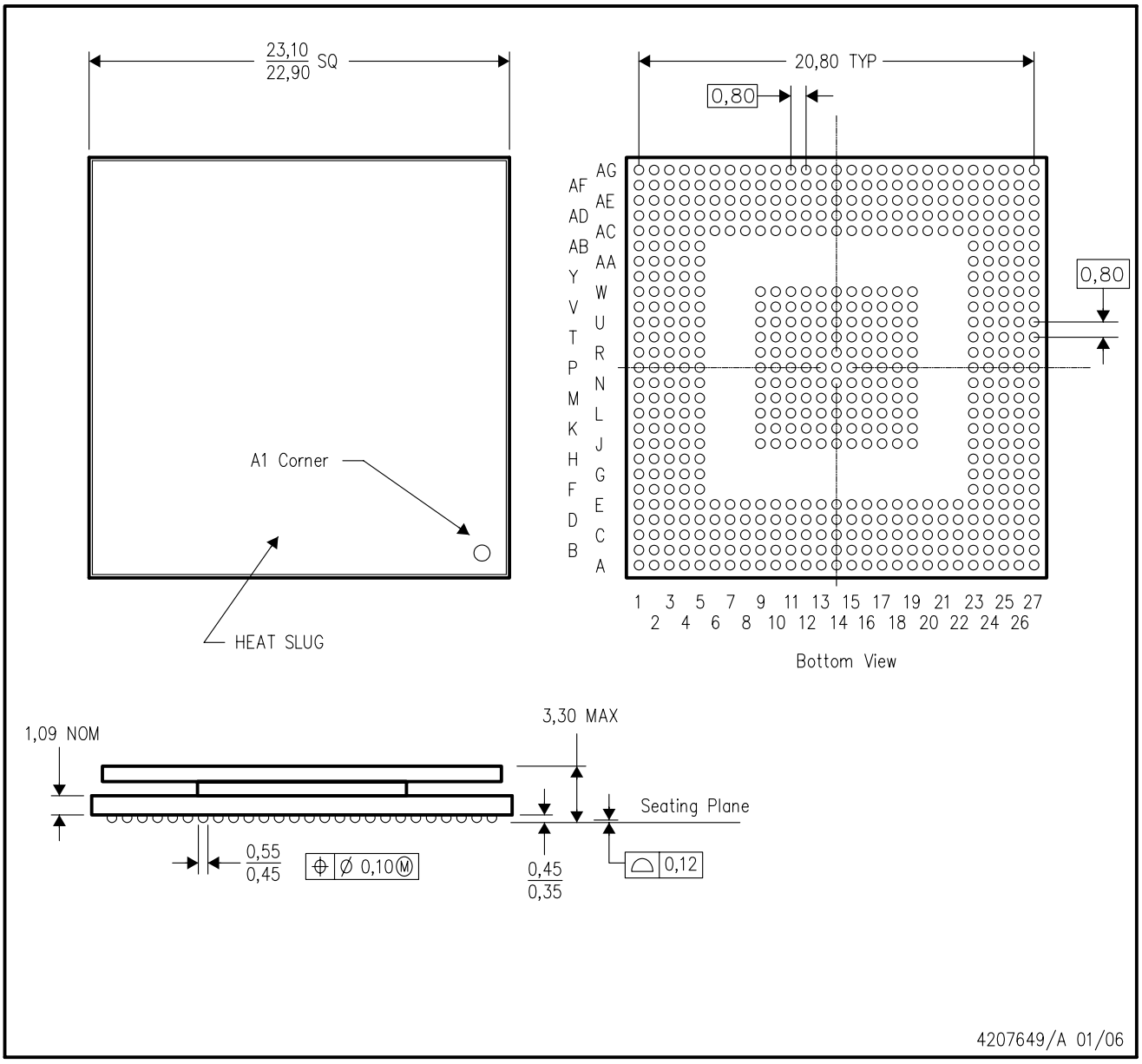

NOTES:
A. All linear dimensions are in millimeters.
B. This drawing is subject to change without notice.
C. Thermally enhanced plastic package with heat slug (HSL).
D. Flip chip application only.
E. Lead–free die bump and solder ball.

GUN (S–PBGA–N561) PLASTIC BALL GRID ARRAY

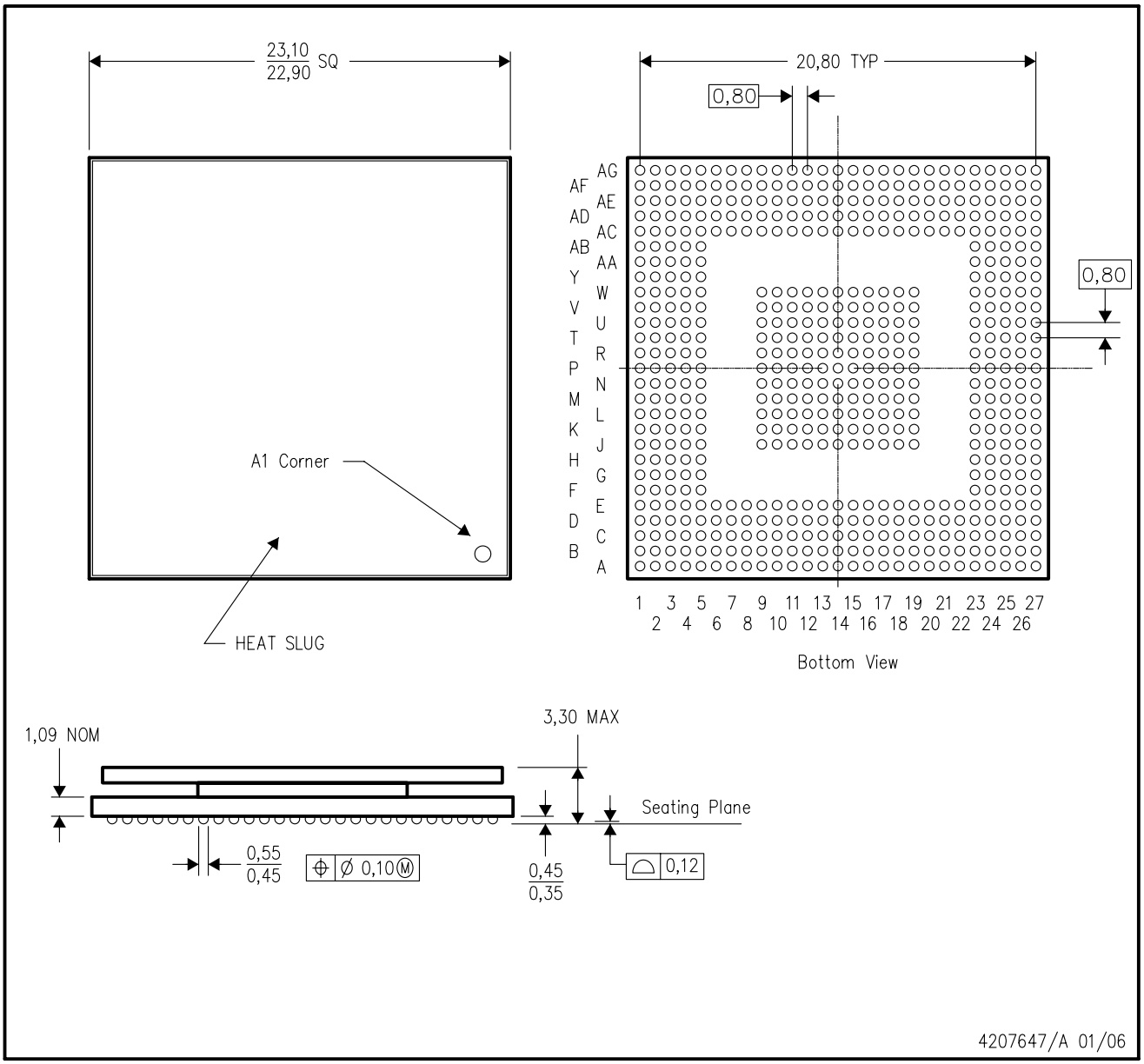

NOTES:
A. All linear dimensions are in millimeters.
B. This drawing is subject to change without notice.
C. Thermally enhanced plastic package with heat slug (HSL).
D. Flip chip application only.

IMPORTANT NOTICE AND DISCLAIMER

TI PROVIDES TECHNICAL AND RELIABILITY DATA (INCLUDING DATASHEETS), DESIGN RESOURCES (INCLUDING REFERENCE DESIGNS), APPLICATION OR OTHER DESIGN ADVICE, WEB TOOLS, SAFETY INFORMATION, AND OTHER RESOURCES “AS IS” AND WITH ALL FAULTS, AND DISCLAIMS ALL WARRANTIES, EXPRESS AND IMPLIED, INCLUDING WITHOUT LIMITATION ANY IMPLIED WARRANTIES OF MERCHANTABILITY, FITNESS FOR A PARTICULAR PURPOSE OR NON-INFRINGEMENT OF THIRD PARTY INTELLECTUAL PROPERTY RIGHTS.

These resources are intended for skilled developers designing with TI products. You are solely responsible for (1) selecting the appropriate TI products for your application, (2) designing, validating and testing your application, and (3) ensuring your application meets applicable standards, and any other safety, security, regulatory or other requirements.

These resources are subject to change without notice. TI grants you permission to use these resources only for development of an application that uses the TI products described in the resource. Other reproduction and display of these resources is prohibited. No license is granted to any other TI intellectual property right or to any third party intellectual property right. TI disclaims responsibility for, and you fully indemnify TI and its representatives against any claims, damages, costs, losses, and liabilities arising out of your use of these resources.

TI’s products are provided subject to TI’s Terms of Sale, TI’s General Quality Guidelines, or other applicable terms available either on ti.com or provided in conjunction with such TI products. TI’s provision of these resources does not expand or otherwise alter TI’s applicable warranties or warranty disclaimers for TI products. Unless TI explicitly designates a product as custom or customer-specified, TI products are standard, catalog, general purpose devices.

TI objects to and rejects any additional or different terms you may propose.

Copyright © 2026, Texas Instruments Incorporated

Last updated 10/2025

Looking for pricing, stock, or lifecycle information?

Click below to explore more details on WIN SOURCE:

- View TMS320C6474FZUN8 on WIN SOURCE
- Texas Instruments Information

Optimize Your Supply Chain with WIN SOURCE Solutions

- Global Sourcing Solution
- Obsolete Management
- Cost Control Management
- Shortage Management
- Alternative Solution
- Excess Inventory Management