WINSOURCE ELECTRONICS

THE DATASHEET OF

TMS320C6457CGMHA

www.win-source.net 0086-755-83957316

TMS320C6457

Communications Infrastructure Digital Signal Processor

Data Manual



PRODUCTION DATA information is current as of publication date. Products conform to specifications per the terms of Texas Instruments standard warranty. Production processing does not necessarily include testing of all parameters.

Literature Number: SPRS582B
July 2010

Release History

	Additions/Modifications/Deletions
SPRS582B	• Added 850 mHz clock speed. • Added content to the Warm Reset section describing how to preserve contents of DDR2 SDRAM through a Warm Reset cycle with *Self-Refresh* mode enabled on the SDRAM. • Corrected typo in the Reset Timing Requirements table, parameter number 2: changed $\overline{\text{RESET}}$x to $\overline{\text{RESET}}$ and POR to $\overline{\text{POR}}$. • Corrected 1.2-V to 1.1-V in last item of Features bullet list.
SPRS582A	• Corrected CORECLK(P|N) and ALTCORECLK max frequency, minimum period time, duty cycle, and transition times • Corrected Period Jitter tolerance, duty cycle, and transition times for DDRREFCLK(P|N) and ALTDDRCLK • Corrected PLL2 block diagram to include correct reference to $PLLV_2$ voltage net • Added DDR2CLKOUT0(N|P) and DDR2CLKOUT0(N|P) min and max frequency to PLL2 Clock Frequency Ranges table • Removed PLLOUT term from the PLL2 Clock Frequency ranges table • Clarified wording in the introduction of the PLL2 section and on the effective x5 multiplier that generates DDR2CLKOUT0(N|P) and DDR2CLKOUT0(N|P) from DDRREFCLK(P|N) or ALTDDRCLK • Added Table 7-4 Power Supply to Peripheral I/O Mapping to clarify the exact I/O and reference clock buffers each power supply provides power for • Added Overshoot/Undershoot definition to Table 6-1 Absolute Maximum Ratings • Fixed typo in Table 2-1 under the 1.2 GHz space, “1.2 V, 1.8 V, and 3.3 V” now correctly reads “1.1 V, 1.8 V, and 3.3 V” • Fixed typo for the McBSP timing parameters. “P = 1/CORECLK” now correctly reads “P = 1/SYSREFCLK” • Fixed typo in 7.3.1 Power-Supply Sequencing - The SPRAAG5 reference now correctly references SPRAAV7
SPRS582	• Initial version

2009 Texas Instruments Incorporated

Contents

1 TMS320C6457 Features 11
1.1 TMS320C6457CMH/GMH BGA Package (Bottom View) 12
1.2 Description 12
1.3 Functional Block Diagram 14
2 Device Overview 15
2.1 Device Characteristics 15
2.2 CPU (DSP Core) Description 15
2.3 Memory Map Summary 19
2.4 Boot Sequence 21
2.5 Boot Modes Supported 21
2.5.1 Second-Level Bootloaders 22
2.6 Pin Assignments 23
2.6.1 Pin Map 23
2.7 Signal Groups Description 27
2.8 Terminal Functions 33
2.9 Development 55
2.9.1 Development Support 55
2.9.2 Device Support 55
3 Device Configuration 59
3.1 Device Configuration at Device Reset 59
3.2 Peripheral Selection After Device Reset 60
3.3 Device State Control Registers 60
3.4 Device Status Register Description 61
3.5 JTAG ID (JTAGID) Register Description 62
3.6 Pullup/Pulldown Resistors 63
4 System Interconnect 65
4.1 Internal Buses, Bridges, and Switch Fabrics 65
4.2 Data Switch Fabric Connections 66
4.3 Configuration Switch Fabric 67
4.4 Bus Priorities 69
5 C64x+ Megamodule 71
5.1 Memory Architecture 72
5.1.1 L1P Memory 72
5.1.2 L1D Memory 73
5.1.3 L2 Memory 74
5.1.4 L3 Memory 75
5.2 Memory Protection 75
5.3 Bandwidth Management 76
5.4 Power-Down Control 76
5.5 Megamodule Resets 77
5.6 Megamodule Revision 77
5.7 C64x+ Megamodule Register Descriptions 77
6 Device Operating Conditions 87
6.1 Absolute Maximum Ratings 87
6.2 Recommended Operating Conditions 88
6.3 Electrical Characteristics 89
7 C64x+ Peripheral Information and Electrical Specifications 91
7.1 Parameter Information 91
7.1.1 1.8-V Signal Transition Levels 91
7.1.2 3.3-V Signal Transition Levels 92
7.1.3 3.3-V Signal Transition Rates 92
7.1.4 Timing Parameters and Board Routing Analysis 92
7.2 Recommended Clock and Control Signal Transition Behavior 93
7.3 Power Supplies 93
7.3.1 Power-Supply Sequencing 94

7.3.2 Power-Supply Decoupling 94
7.3.3 Power-Down Operation 94
7.4 Enhanced Direct Memory Access (EDMA3) Controller 95
7.4.1 EDMA3 Device-Specific Information 96
7.4.2 EDMA3 Channel Synchronization Events 96
7.4.3 EDMA3 Peripheral Register Description(s) 97
7.5 Interrupts 120
7.5.1 Interrupt Sources and Interrupt Controller 120
7.5.2 External Interrupts Electrical Data/Timing 122
7.6 Reset Controller 123
7.6.1 Power-on Reset ($\overline{\text{POR}}$ Pin) 123
7.6.2 Warm Reset (RESET Pin) 124
7.6.3 System Reset 124
7.6.4 CPU Reset 125
7.6.5 Reset Priority 125
7.6.6 Reset Controller Register 125
7.6.7 Reset Electrical Data/Timing 128
7.7 PLL1 and PLL1 Controller 130
7.7.1 PLL1 Controller Device-Specific Information 131
7.7.2 PLL1 Controller Memory Map 133
7.7.3 PLL1 Controller Registers 134
7.7.4 PLL1 Controller Input and Output Electrical Data/Timing 141
7.8 PLL2 142
7.8.1 PLL2 Device-Specific Information 142
7.8.2 PLL2 Input Clock Electrical Data/Timing 143
7.9 DDR2 Memory Controller 144
7.9.1 DDR2 Memory Controller Device-Specific Information 144
7.9.2 DDR2 Memory Controller Peripheral Register Description(s) 145
7.9.3 DDR2 Memory Controller Electrical Data/Timing 145
7.10 External Memory Interface A (EMIFA) 145
7.10.1 EMIFA Device-Specific Information 145
7.10.2 EMIFA Peripheral Register Description(s) 146
7.10.3 EMIFA Electrical Data/Timing 147
7.11 I^2C Peripheral 154
7.11.1 I^2C Device-Specific Information 154
7.11.2 I^2C Peripheral Register Description(s) 155
7.11.3 I^2C Electrical Data/Timing 156
7.12 Host-Port Interface (HPI) Peripheral 158
7.12.1 HPI Device-Specific Information 158
7.12.2 HPI Peripheral Register Description(s) 158
7.12.3 HPI Electrical Data/Timing 159
7.13 Multichannel Buffered Serial Port (McBSP) 168
7.13.1 McBSP Device-Specific Information 168
7.13.2 McBSP Electrical Data/Timing 169
7.14 Ethernet MAC (EMAC) 175
7.14.1 EMAC Device-Specific Information 176
7.14.2 EMAC Peripheral Register Description(s) 176
7.14.3 EMAC Electrical Data/Timing (SGMII) 181
7.15 Management Data Input/Output (MDIO) 181
7.15.1 MDIO Peripheral Register Description(s) 181
7.15.2 MDIO Electrical Data/Timing 182
7.16 Timers 182
7.16.1 Timers Device-Specific Information 183
7.16.2 Timers Peripheral Register Description(s) 183
7.16.3 Timers Electrical Data/Timing 184
7.17 Enhanced Viterbi-Decoder Coprocessor (VCP2) 185
7.17.1 VCP2 Device-Specific Information 185
7.17.2 VCP2 Peripheral Register Description 185
7.18 Enhanced Turbo Decoder Coprocessor (TCP2) 186

2009 Texas Instruments Incorporated

7.18.1 TCP2 Device-Specific Information . . . 186
7.19 UTOPIA . . . 189
7.19.1 UTOPIA Device-Specific Information . . . 189
7.19.2 UTOPIA Peripheral Register Description(s) . . . 189
7.19.3 UTOPIA Electrical Data/Timing . . . 189
7.20 Serial RapidIO (SRIO) Port . . . 192
7.20.1 Serial RapidIO Device-Specific Information . . . 192
7.20.2 Serial RapidIO Peripheral Register Description(s) . . . 193
7.20.3 Serial RapidIO Electrical Data/Timing . . . 204
7.21 General-Purpose Input/Output (GPIO) . . . 204
7.21.1 GPIO Device-Specific Information . . . 204
7.21.2 GPIO Peripheral Register Description(s) . . . 204
7.21.3 GPIO Electrical Data/Timing . . . 205
7.22 Emulation Features and Capability . . . 205
7.22.1 Advanced Event Triggering (AET) . . . 205
7.22.2 Trace . . . 206
7.22.3 IEEE 1149.1 JTAG . . . 206
8 Mechanical Data . . . 209
8.1 Thermal Data . . . 209
8.2 Packaging Information . . . 209
8.3 Package CMH . . . 210
8.4 Package GMH . . . 211

List of Figures

Figure 1-1 CMH/GMH 688-Pin Ball Grid Array (BGA) Package....12
Figure 1-2 Functional Block Diagram....14
Figure 2-1 TMS320C64x+ CPU (DSP Core) Data Paths....18
Figure 2-2 TMS320C6457 Pin Map (Bottom View) [Quadrant A]....23
Figure 2-3 TMS320C6457 Pin Map (Bottom View) [Quadrant B]....24
Figure 2-4 TMS320C6457 Pin Map (Bottom View) [Quadrant C]....25
Figure 2-5 TMS320C6457 Pin Map (Bottom View) [Quadrant D]....26
Figure 2-6 CPU and Peripheral Signals....27
Figure 2-7 Timers/GPIO/RapidIO Peripheral Signals....28
Figure 2-8 EMIFA and DDR2 Memory Controller Peripheral Signals....29
Figure 2-9 HPI/McBSP/I2C Peripheral Signals....30
Figure 2-10 EMAC/MDIO (SGMII) Peripheral Signals....31
Figure 2-11 UTOPIA Peripheral Signals....32
Figure 2-12 TMS320C64x+™ DSP Device Nomenclature (including the TMS320C6457 DSP)....56
Figure 4-1 Data Switched Central Resource Block Diagram....66
Figure 4-2 Configuration Switched Central Resource (SCR) Block Diagram....68
Figure 5-1 64x+ Megamodule Block Diagram....71
Figure 5-2 TMS320C6457 L1P Memory Configurations....72
Figure 5-3 TMS320C6457 L1D Memory Configurations....73
Figure 5-4 TMS320C6457 L2 Memory Configurations....74
Figure 7-1 Test Load Circuit for AC Timing Measurements....91
Figure 7-2 Input and Output Voltage Reference Levels for 1.8-V AC Timing Measurements....91
Figure 7-3 Rise and Fall Transition Time Voltage Reference Levels....91
Figure 7-4 Input and Output Voltage Reference Levels for 3.3-V AC Timing Measurements....92
Figure 7-5 Rise and Fall Transition Time Voltage Reference Levels....92
Figure 7-6 Board-Level Input/Output Timings....93
Figure 7-7 Power-Supply Sequence....94
Figure 7-8 NMI Interrupt Timing....122
Figure 7-9 Power-On Reset Timing....129
Figure 7-10 Warm Reset Timing — RESETSTAT Relative to RESET....129
Figure 7-11 Warm Reset Timing — Setup Time Between POR De-Asserted and RESET Asserted....129
Figure 7-12 PLL1 and PLL1 Controller....130
Figure 7-13 CORECLK(N|P) and ALTCORECLK Timing....142
Figure 7-14 PLL2 Block Diagram....142
Figure 7-15 DDRREFCLK(N|P) Timing....143
Figure 7-16 EMIFA AECLKIN Timing....147
Figure 7-17 EMIFA AECLKOUT Timing....147
Figure 7-18 EMIFA Asynchronous Memory Read Timing....149
Figure 7-19 EMIFA Asynchronous Memory Write Timing....150
Figure 7-20 EMIFA EM_Wait Read Timing....150
Figure 7-21 EMIFA EM_Wait Write Timing....151
Figure 7-22 EMIFA Programmable Synchronous Interface Read Timing (With Read Latency = 2)(A)....152
Figure 7-23 EMIFA Programmable Synchronous Interface Write Timing (With Write Latency = 0)(A)....153
Figure 7-24 EMIFA Programmable Synchronous Interface Write Timing (With Write Latency = 1) (A)....153
Figure 7-25 I2C Module Block Diagram....155
Figure 7-26 I2C Receive Timing....157
Figure 7-27 I2C Transmit Timing....158
Figure 7-28 HPI16 Read Timing (HAS Not Used, Tied High)....160
Figure 7-29 HPI16 Read Timing (HAS Used)....161
Figure 7-30 HPI16 Write Timing (HAS Not Used, Tied High)....162
Figure 7-31 HPI16 Write Timing (HAS Used)....163
Figure 7-32 HPI32 Read Timing (HAS Not Used, Tied High)....164

2009 Texas Instruments Incorporated

Figure 7-33 HPI32 Read Timing (HAS Used) . . . 165
Figure 7-34 HPI32 Write Timing (HAS Not Used, Tied High) . . . 166
Figure 7-35 HPI32 Write Timing (HAS Used) . . . 167
Figure 7-36 McBSP Timing . . . 171
Figure 7-37 FSR Timing When GSYNC = 1 . . . 171
Figure 7-38 SPI Timing as Master or Slave: CLKSTP = 10b, CLKXP = 0 . . . 172
Figure 7-39 SPI Timing as Master or Slave: CLKSTP = 10b, CLKXP = 1 . . . 173
Figure 7-40 SPI Timing as Master or Slave: CLKSTP = 11b, CLKXP = 0 . . . 174
Figure 7-41 SPI Timing as Master or Slave: CLKSTP = 11b, CLKXP = 1 . . . 175
Figure 7-42 EMAC, MDIO, and EMAC Control Modules . . . 176
Figure 7-43 MDIO Input Timing . . . 182
Figure 7-44 MDIO Output Timing . . . 182
Figure 7-45 Timer Timing . . . 185
Figure 7-46 UXCLK Timing . . . 190
Figure 7-47 URCLK Timing . . . 190
Figure 7-48 UTOPIA Slave Transmit Timing(A) . . . 191
Figure 7-49 UTOPIA Slave Receive Timing(A) . . . 192
Figure 7-50 GPIO Timing . . . 205
Figure 7-51 Trace Timing . . . 206
Figure 7-52 JTAG Test-Port Timing . . . 207
Figure 7-53 HS-RTDX Timing . . . 208
Figure 8-1 CMH (S–PBGA–N688) Pb-Free Plastic Ball Grid Array . . . 210
Figure 8-2 GMH (S–PBGA–N688) Plastic Ball Grid Array . . . 211

List of Tables

Table 2-1 Characteristics of the C6457 Processor 15
Table 2-2 TMS320C6457 Memory Map Summary 19
Table 2-3 TMS320C6457 Supported Boot Modes 22
Table 2-4 Serial RapidIO (SRIO) Supported Boot Modes 22
Table 2-5 I/O Functional Symbol Definitions 33
Table 2-6 Terminal Functions 33
Table 2-7 Relevant Documents 56
Table 3-1 TMS320C6457 Device Configuration Pins 59
Table 3-2 Device State Control Registers 60
Table 3-3 Device Configuration Register Fields 61
Table 3-4 Device Configuration Status Register (DEVSTAT) 61
Table 3-5 Device Configuration Status Register Field Descriptions 61
Table 3-6 JTAG ID (JTAGID) Register 62
Table 3-7 JTAG ID (JTAGID) Register Field Descriptions 62
Table 4-1 SCR Connection Matrix 67
Table 4-2 TMS320C6457 Default Bus Master Priorities 69
Table 4-3 Priority Allocation Register (PRI_ALLOC) 69
Table 4-4 Priority Allocation Register (PRI_ALLOC) Field Descriptions 69
Table 5-1 Available Memory Page Protection Scheme With Privilege ID 75
Table 5-2 Available Memory Page Protection Schemes 75
Table 5-3 Megamodule Reset (Global or Local) 77
Table 5-4 Megamodule Revision ID Register (MM_REVID) 77
Table 5-5 Megamodule Revision ID Register (MM_REVID) Field Descriptions 77
Table 5-6 Megamodule Interrupt Registers 77
Table 5-7 Megamodule Powerdown Control Registers 79
Table 5-8 Megamodule Revision Register 79
Table 5-9 Megamodule IDMA Registers 79
Table 5-10 Megamodule Cache Configuration Registers 79
Table 5-11 Megamodule Error Detection Correct Registers 82
Table 5-12 Megamodule L1/L2 Memory Protection Registers 83
Table 5-13 CPU Megamodule Bandwidth Management Registers 85
Table 6-1 Absolute Maximum Ratings 87
Table 6-2 Recommended Operating Conditions 88
Table 6-3 Electrical Characteristics 89
Table 6-4 Power Supply to Peripheral I/O Mapping 90
Table 7-1 Board-Level Timing Example 92
Table 7-2 Timing Requirements for Power-Supply Sequence 94
Table 7-3 C6457 EDMA3 Channel Synchronization Events 96
Table 7-4 EDMA3 Registers 97
Table 7-5 EDMA3 Parameter RAM 111
Table 7-6 EDMA3 Transfer Controller 0 Registers 111
Table 7-7 EDMA3 Transfer Controller 1 Registers 113
Table 7-8 EDMA3 Transfer Controller 2 Registers 114
Table 7-9 EDMA3 Transfer Controller 3 Registers 115
Table 7-10 EDMA3 Transfer Controller 4 Registers 117
Table 7-11 EDMA3 Transfer Controller 5 Registers 118
Table 7-12 TMS320C6457 System Event Mapping 120
Table 7-13 Timing Requirements for External Interrupts 122
Table 7-14 Reset Types 123
Table 7-15 Reset Type Status Register (RSTYPE) 126
Table 7-16 Reset Type Status Register (RSTYPE) Field Descriptions 126
Table 7-17 Software Reset Control Register (RSTCTRL) 127

2009 Texas Instruments Incorporated

Table 7-18 Software Reset Control Register Field Descriptions 127
Table 7-19 Reset Configuration Register (RSTCFG) 127
Table 7-20 Reset Configuration Register (RSTCFG) Field Descriptions 127
Table 7-21 Reset Timing Requirements 128
Table 7-22 Reset Switching Characteristics Over Recommended Operating Conditions 128
Table 7-23 Warm Reset Switching Characteristics Over Recommended Operating Conditions 128
Table 7-24 Timing Requirements for Reset 132
Table 7-25 PLL1 Stabilization, Lock, and Reset Times 132
Table 7-26 PLL1 Controller Registers (Including Reset Controller) 133
Table 7-27 PLL1 Control Register (PLLCTL) 134
Table 7-28 PLL1 Control Register (PLLCTL) Field Descriptions 134
Table 7-29 PLL Multiplier Control Register (PLLM) 135
Table 7-30 PLL Multiplier Control Register (PLLM) Field Descriptions 135
Table 7-31 PLL Post-Divider Control Register (POSTDIV) 135
Table 7-32 PLL Post-Divider Control Register (POSTDIV) Field Descriptions 136
Table 7-33 PLL Controller Divider 3 Register (PLLDIV3) 136
Table 7-34 PLL Controller Divider 3 Register (PLLDIV3) Field Descriptions 136
Table 7-35 PLL Controller Divider 6 Register (PLLDIV6) 137
Table 7-36 PLL Controller Divider 6 Register (PLLDIV6) Field Descriptions 137
Table 7-37 PLL Controller Divider 7 Register (PLLDIV7) 137
Table 7-38 PLL Controller Divider 7 Register (PLLDIV7) Field Descriptions 137
Table 7-39 PLL Controller Divider 8 Register (PLLDIV8) 138
Table 7-40 PLL Controller Divider 8 Register (PLLDIV8) Field Descriptions 138
Table 7-41 PLL Controller Command Register (PLLCMD) 139
Table 7-42 PLL Controller Command Register (PLLCMD) Field Descriptions 139
Table 7-43 PLL Controller Status Register (PLLSTAT) 139
Table 7-44 PLL Controller Status Register (PLLSTAT) Field Descriptions 139
Table 7-45 PLL Controller Clock Align Control Register (ALNCTL) 140
Table 7-46 PLL Controller Clock Align Control Register (ALNCTL) Field Descriptions 140
Table 7-47 PLLDIV Divider Ratio Change Status Register (DCHANGE) 140
Table 7-48 PLLDIV Divider Ratio Change Status Register (DCHANGE) Field Descriptions 140
Table 7-49 SYSCLK Status Register (SYSTAT) 141
Table 7-50 SYSCLK Status Register (SYSTAT) Field Descriptions 141
Table 7-51 CORECLK(N|P) and ALTCORECLK Timing Requirements 141
Table 7-52 PLL2 Clock Frequency Ranges 143
Table 7-53 Timing Requirements for DDRREFCLK(N|P) and ALTDDRCLK 143
Table 7-54 DDR2 Memory Controller Registers 145
Table 7-55 EMIFA Registers 146
Table 7-56 EMIFA AECLKIN Timing Requirements 147
Table 7-57 EMIFA AECLKOUT Switching Characteristics 147
Table 7-58 EMIFA Asynchronous Memory Read Switching Characteristics 148
Table 7-59 EMIFA Asynchronous Memory Read Timing Requirements 148
Table 7-60 EMIFA Asynchronous Memory Write Timing Requirements 149
Table 7-61 EMIFA EM_Wait Read Timing Requirements 150
Table 7-62 EMIFA EM_Wait Read Switching Characteristics 150
Table 7-63 EMIFA EM_Wait Write Timing Requirements 151
Table 7-64 Timing Requirements for Programmable Synchronous Interface Cycles for EMIFA Module 151
Table 7-65 Switching Characteristics for Programmable Synchronous Interface Cycles for EMIFA Module 152
Table 7-66 I^2C Registers 155
Table 7-67 I^2C Timing Requirements 156
Table 7-68 I^2C Switching Characteristics 157
Table 7-69 HPIWIDTH Selection 158
Table 7-70 HPI Control Registers 158
Table 7-71 Host-Port Interface Timing Requirements 159

Table 7-72 Host-Port Interface Switching Characteristics 159
Table 7-73 McBSP 0 Registers 168
Table 7-74 McBSP 1 Registers 169
Table 7-75 McBSP Timing Requirements 169
Table 7-76 Switching Characteristics for McBSP 170
Table 7-77 Timing Requirements for FSR When GSYNC = 1 171
Table 7-78 SPI Timing Requirements as Master or Slave: CLKSTP = 10b, CLKXP = 0 172
Table 7-79 SPI Switching Characteristics as Master or Slave: CLKSTP = 10b, CLKXP = 0 172
Table 7-80 SPI Timing Requirements as Master or Slave: CLKSTP = 10b, CLKXP = 1 173
Table 7-81 SPI Switching Characteristics as Master or Slave: CLKSTP = 10b, CLKXP = 1 173
Table 7-82 SPI Timing Requirements as Master or Slave: CLKSTP = 11b, CLKXP = 0 174
Table 7-83 SPI Switching Characteristics as Master or Slave: CLKSTP = 11b, CLKXP = 0 174
Table 7-84 SPI Timing Requirements as Master or Slave: CLKSTP = 11b, CLKXP = 1 174
Table 7-85 SPI Switching Characteristics as Master or Slave: CLKSTP = 11b, CLKXP = 1 175
Table 7-86 Ethernet MAC (EMAC) Control Registers 176
Table 7-87 EMAC Statistics Registers 179
Table 7-88 EMAC Descriptor Memory 180
Table 7-89 SGMII Control Registers 180
Table 7-90 EMIC Control Registers 180
Table 7-91 MDIO Registers 181
Table 7-92 MDIO Input Timing Requirements 182
Table 7-93 MDIO Output Switching Characteristics 182
Table 7-94 Timer1 Watchdog Reset Selection Register (WDRSTSEL) 183
Table 7-95 Timer1 Watchdog Reset Selection Register (WDRSTSEL) Field Descriptions 183
Table 7-96 Timer 0 Registers 183
Table 7-97 Timer 1 Registers 184
Table 7-98 Timer Input Timing Requirements 184
Table 7-99 Timer Output Switching Characteristics 184
Table 7-100 VCP2 Registers 185
Table 7-101 TCP2_A Registers 187
Table 7-102 TCP2_B Registers 187
Table 7-103 UTOPIA Registers 189
Table 7-104 UTOPIA Data Queues (Receive and Transmit) Registers 189
Table 7-105 UXCLK Timing Requirements 189
Table 7-106 URCLK Timing Requirements 190
Table 7-107 UTOPIA Slave Transmit Timing Requirements 190
Table 7-108 UTOPIA Slave Transmit Cycles Switching Characteristics 190
Table 7-109 UTOPIA Slave Receive Timing Requirements 191
Table 7-110 Switching Characteristics for UTOPIA Slave Receive Cycles 191
Table 7-111 RapidIO Control Registers 193
Table 7-112 GPIO Registers 204
Table 7-113 GPIO Input Timing Requirements 205
Table 7-114 GPIO Output Switching Characteristics 205
Table 7-115 Switching Characteristics for Trace 206
Table 7-116 JTAG Test Port Timing Requirements 207
Table 7-117 JTAG Test Port Switching Characteristics 207
Table 7-118 Timing Requirements for HS-RTDX 207
Table 7-119 Switching Characteristics for HS-RTDX 207
Table 8-1 Thermal Resistance Characteristics (PBGA Package) [CMH/GMH] 209

2009 Texas Instruments Incorporated

1 TMS320C6457 Features

- High-Performance Fixed-Point DSP (C6457)
  - 1.18-ns, 1-ns, and 0.83-ns Instruction Cycle Time
  - 850-MHz, 1-GHz, and 1.2-GHz Clock Rate
  - Eight 32-Bit Instructions/Cycle
  - 8000 and 9600 MIPS/MMACS (16-Bits)
  - Case Temperature
    - Commercial:
      - 0°C to 100°C (850 MHz)
      - 0°C to 100°C (1 GHz)
      - 0°C to 95°C (1.2 GHz)
    - Extended:
      - -40°C to 100°C (1 GHz)
      - -40°C to 95°C (1.2 GHz)
- TMS320C64x+™ DSP Core
  - Dedicated SPLOOP Instruction
  - Compact Instructions (16-Bit)
  - Instruction Set Enhancements
  - Exception Handling
- TMS320C64x+ Megamodule L1/L2 Memory Architecture:
  - 256K-Bit (32K-Byte) L1P Program Cache [Direct Mapped]
  - 256K-Bit (32K-Byte) L1D Data Cache [2-Way Set-Associative]
  - 16M-Bit (2048K-Byte) L2 Unified Mapped Ram/Cache [Flexible Allocation]
    - Configurable up to 1MB of L2 Cache
  - 512K-Bit (64K-Byte) L3 ROM
  - Time Stamp Counter
- Enhanced VCP2
  - Supports Over 694 7.95-Kbps AMR
  - Programmable Code Parameters
- Two Enhanced Turbo Decoder Coprocessors (TCP2_A and TCP2_B)
  - Each TCP2 Supports up to Eight 2-Mbps 3GPP (6 Iterations)
  - Programmable Turbo Code and Decoding Parameters
- Endianess: Little Endian, Big Endian
- 64-Bit External Memory Interface (EMIFA)
  - Glueless Interface to Asynchronous Memories (SRAM, Flash, and EEPROM) and Synchronous Memories (SBSRAM, ZBT SRAM)
  - Supports Interface to Standard Sync Devices and Custom Logic (FPGA, CPLD, ASICs, etc.)
  - 32M-Byte Total Addressable External Memory Space
- 32-Bit DDR2 Memory Controller (DDR2-667 SDRAM)
- Four 1× Serial RapidIO® Links (or One 4×), v1.3 Compliant
  - 1.25-, 2.5-, 3.125-Gbps Link Rates
  - Message Passing, DirectIO Support, Error Mgmt Extensions, Congestion Control
  - IEEE 1149.6 Compliant I/Os
- EDMA3 Controller (64 Independent Channels)
- 32-/16-Bit Host-Port Interface (HPI)
- Two 1.8-V McBSPs
- 10/100/1000 Mb/s Ethernet MAC (EMAC)
  - IEEE 802.3 Compliant
  - Supports SGMII, v1.8 Compliant
  - 8 Independent Transmit (TX) and 8 Independent Receive (RX) Channels
- Two 64-Bit General-Purpose Timers
  - Configurable as Four 32-Bit Timers
  - Configurable in a Watchdog Timer Mode
- UTOPIA
  - UTOPIA Level 2 Slave ATM Controller
  - 8-Bit Transmit and Receive Operations up to 50 MHz per Direction
  - User-Defined Cell Format up to 64 Bytes
- One 1.8-V Inter-Integrated Circuit (I2C) Bus
- 16 General-Purpose I/O (GPIO) Pins
- System PLL and PLL Controller
- DDR PLL, Dedicated to DDR2 Memory Controller
- Advanced Event Triggering (AET) Compatible
- Trace-Enabled Device
- Supports IP Security
- IEEE-1149.1 and IEEE-1149.6 (JTAG™) Boundary-Scan-Compatible
- 688-Pin Ball Grid Array (BGA) Package (CMH or GMH Suffix), 0.8-mm Ball Pitch
- 0.065-µm/7-Level Cu Metal Process (CMOS)
- 3.3-V, 1.8-V, 1.1-V I/Os, 1.1-V and 1.2-V Internal

PRODUCT PREVIEW

2009 Texas Instruments Incorporated

PRODUCT PREVIEW

1.1 TMS320C6457CMH/GMH BGA Package (Bottom View)

Figure 1-1 CMH/GMH 688-Pin Ball Grid Array (BGA) Package

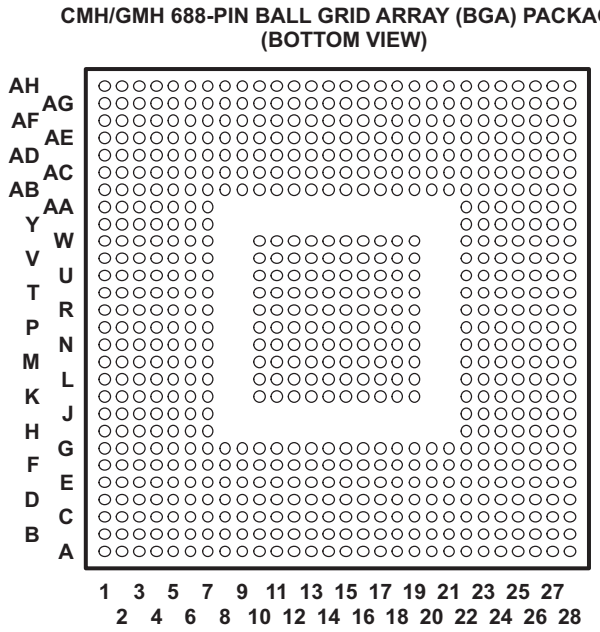

(A) The CMH mechanical package designator represents the version of the GMH package with lead-free balls. For more detailed information, see "Mechanical Data" on page 209 of this document.

1.2 Description

The TMS320C64x+™ DSPs (including the TMS320C6457 device) are the highest-performance fixed-point DSP generation in the TMS320C6000™ DSP platform. The C6457 device is based on the third-generation high-performance, advanced VelociTI™ very-long-instruction-word (VLIW) architecture developed by Texas Instruments (TI), making these DSPs an excellent choice for applications including video and telecom infrastructure, imaging/medical, and wireless infrastructure (WI). The C64x+ devices are upward code-compatible from previous devices that are part of the C6000™ DSP platform.

Based on 65-nm process technology and with performance of up to 9600 million instructions per second (MIPS) [or 9600 16-bit MMACs per cycle] at a 1.2-GHz clock rate, the C6457 device offers cost-effective solutions to high-performance DSP programming challenges. The C6457 DSP possesses the operational flexibility of high-speed controllers and the numerical capability of array processors.

The C64x+ DSP core employs eight functional units, two register files, and two data paths. Like the earlier C6000 devices, two of these eight functional units are multipliers or .M units. Each C64x+ .M unit doubles the multiply throughput versus the C64x core by performing four 16-bit × 16-bit multiply-accumulates (MACs) every clock cycle. Thus, eight 16-bit × 16-bit MACs can be executed every cycle on the C64x+ core. At a 1.2-GHz clock rate, this means 9600 16-bit MMACs can occur every second. Moreover, each multiplier on the C64x+ core can compute one 32-bit × 32-bit MAC or four 8-bit × 8-bit MACs every clock cycle.

The C6457 device includes Serial RapidIO®. This high-bandwidth peripheral dramatically improves system performance and reduces system cost for applications that include multiple DSPs on a board, such as video and telecom infrastructures and medical/imaging.

2009 Texas Instruments Incorporated

The C6457 DSP integrates a large amount of on-chip memory organized as a two-level memory system. The level-1 (L1) program and data memories on the C6457 device are 32KB each. This memory can be configured as mapped RAM, cache, or some combination of the two. When configured as cache, L1 program (L1P) is a direct mapped cache whereas L1 data (L1D) is a two-way set associative cache. The level 2 (L2) memory is shared between program and data space and is 2048KB in size. L2 memory can also be configured as mapped RAM, cache, or some combination of the two. L2 is configurable up to 1MB of cache. The C64x+ Megamodule also has a 32-bit peripheral configuration (CFG) port, an internal DMA (IDMA) controller, a system component with reset/boot control, interrupt/exception control, a power-down control, and a free-running 32-bit timer for time stamp.

The peripheral set includes: an inter-integrated circuit bus module (I^2C); two multichannel buffered serial ports (McBSPs); an 8-bit Universal Test and Operations PHY Interface for Asynchronous Transfer Mode (ATM) Slave [UTOPIA Slave] port; two 64-bit general-purpose timers (also configurable as four 32-bit timers); a user-configurable 16-bit or 32-bit host-port interface (HPI16/HPI32); a 16-pin general-purpose input/output port (GPIO) with programmable interrupt/event generation modes; an 10/100/1000 Ethernet media access controller (EMAC), which provides an efficient interface between the C6457 DSP core processor and the network; a management data input/output (MDIO) module (also part of the EMAC) that continuously polls all 32 MDIO addresses in order to enumerate all PHY devices in the system; a glueless external memory interface (64-bit EMIFA), which is capable of interfacing to synchronous and asynchronous peripherals; and a 32-bit DDR2 SDRAM interface.

The C6457 device has three high-performance embedded coprocessors [one enhanced Viterbi Decoder Coprocessor (VCP2) and two enhanced Turbo Decoder Coprocessors (TCP2_A and TCP2_B)] that significantly speed up channel-decoding operations on-chip. The VCP2 operating at CPU clock ÷ 3 can decode more than 694 7.95-Kbps adaptive multi-rate (AMR) [K = 9, R = 1/3] voice channels. The VCP2 supports constraint lengths K = 5, 6, 7, 8, and 9, rates R = 3/4, 1/2, 1/3, 1/4, and 1/5, and flexible polynomials, while generating hard decisions or soft decisions. Each TCP2 operating at CPU clock ÷ 3 can decode up to fifty 384-Kbps or eight 2-Mbps turbo encoded channels (assuming 6 iterations). The TCP2 implements the max*log-map algorithm and is designed to support all polynomials and rates required by Third-Generation Partnership Projects (3GPP and 3GPP2), with fully programmable frame length and turbo interleaver. Decoding parameters such as the number of iterations and stopping criteria are also programmable. Communications between the VCP2/TCP2s and the CPU are carried out through the EDMA3 controller.

The C6457 device has a complete set of development tools, which includes: a new C compiler, an assembly optimizer to simplify programming and scheduling, and a Windows® debugger interface for visibility into source code execution.

PRODUCT PREVIEW

PRODUCT PREVIEW

1.3 Functional Block Diagram

Figure 1-2 Shows the functional block diagram of the TMS320C6457 device.

Figure 1-2 Functional Block Diagram

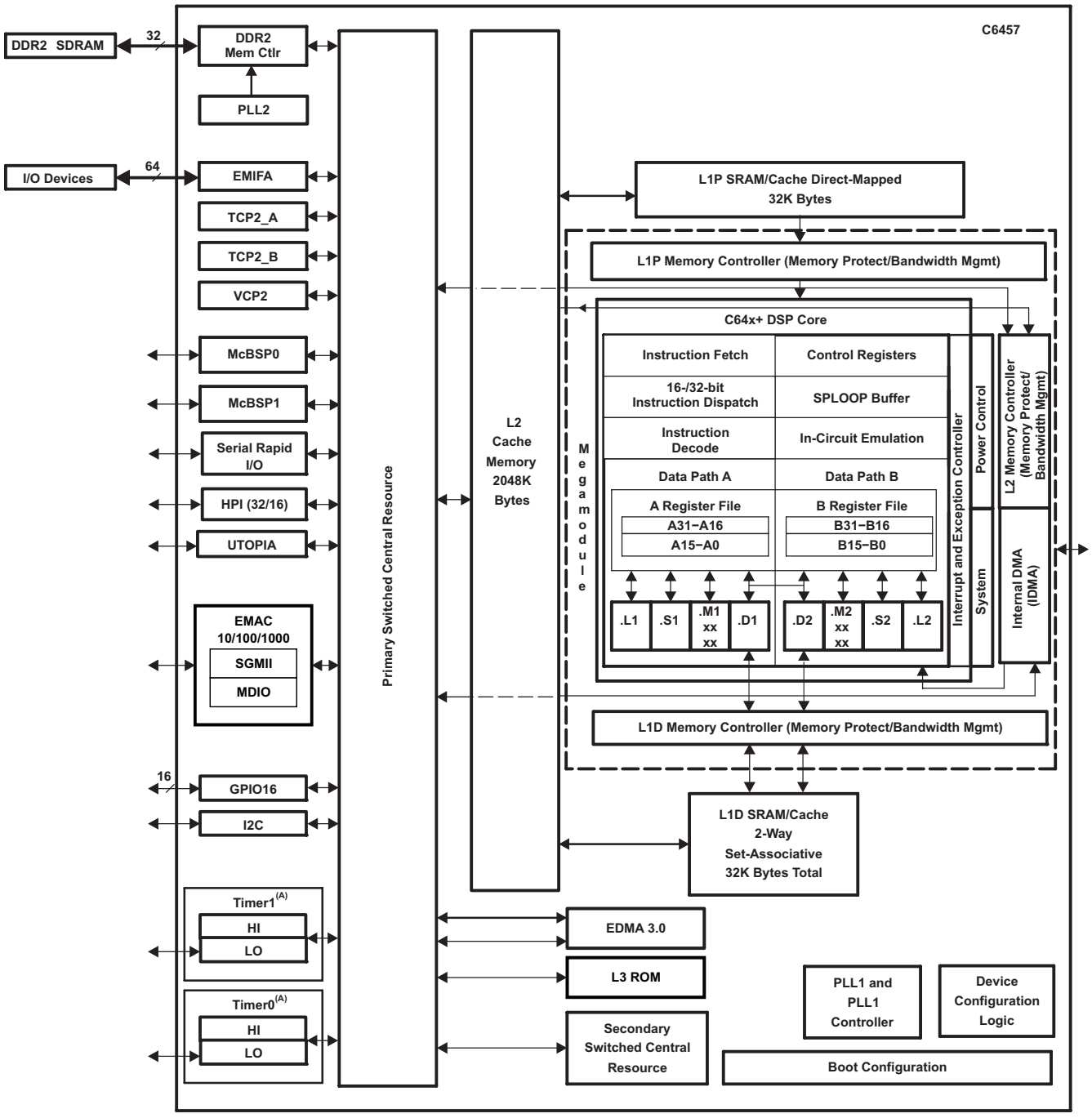

(A) Each of the TIMER peripherals (TIMER1 and TIMER0) is configurable as either one 64-bit general-purpose timer or two 32-bit general-purpose timers or a watchdog timer.

2009 Texas Instruments Incorporated

2 Device Overview

2.1 Device Characteristics

Table 2-1 provides an overview of the TMS320C6457 DSP. The table shows significant features of the C6457 device, including the capacity of on-chip RAM, the peripherals, the CPU frequency, and the package and pin count.

2.2 CPU (DSP Core) Description

Table 2-1 Characteristics of the C6457 Processor (Part 1 of 2)

HARDWARE FEATURES			TMS320C6457
Peripherals	EMIFA (64-bit bus width) (clock source = AECLKIN or SYSCLK7)		1
	DDR2 Memory Controller (32-bit bus width) [1.8 V I/O] (clock source = DDRREFCLKN|P)		1
	EDMA3 (64 independent channels) [CPU/3 clock rate]		1
	High-speed 1×/4× Serial RapidIO Port (4 lanes)		1
	I^2C		1
	HPI (32-or 16-bit user selectable)		1 (HPI16 or HPI32)
	McBSPs (internal or external clock source up to 100 Mbps)		2
	UTOPIA (8-bit mode, 50-MHz, slave-only)		1
	10/100/1000 Ethernet MAC (EMAC)		1
	Management Data Input/Output (MDIO)		1
	64-Bit Timers (configurable) (internal clock source = CPU/6 clock frequency)		2 64-bit ***or*** 4 32-bit
	General-Purpose Input/Output Port (GPIO)		16
Decoder Coprocessors	VCP2 (clock source = CPU/3 clock frequency)		1
	TCP2 (clock source = CPU/3 clock frequency)		2
On-Chip Memory	Size (Bytes)		2176K
	Organization		32KB L1 Program Memory Controller [SRAM/Cache] 32KB L1 Data Memory Controller [SRAM/Cache] 2048KB L2 Unified Memory/Cache 64KB L3 ROM
C64x+ Megamodule Revision ID	Megamodule Revision ID Register (address location: 0181 2000h)		See Section 5.6 "Megamodule Revision" on page 77
JTAG BSDL_ID	JTAGID register (address location: 0288 0818h)		See Section 3.5 "JTAG ID (JTAGID) Register Description" on page 62
Frequency	MHz		850, 1000 (1 GHz), and 1200 (1.2 GHz)
Cycle Time	ns		1.18 ns, 1 ns, and 0.83 ns (0.85, 1.0, & 1.2-GHz CPU)
Voltage	Core (V)	850-MHz CPU	1.1 V
		1-GHz CPU	1.1 V
		1.2-GHz CPU	1.2 V
	I/O (V)	850-MHz CPU	1.1 V, 1.8 V, and 3.3 V
		1-GHz CPU	1.1 V, 1.8 V, and 3.3 V
		1.2-GHz CPU	1.1 V, 1.8 V, and 3.3 V
PLL1 and PLL1 Controller Options	CLKIN1 frequency multiplier		Bypass (×1), (×4 to ×32)
PLL2	DDR2 Clock		×10
BGA Package	23 mm × 23 mm		688-Pin Flip-Chip Plastic BGA (CMH/GMH)
Process Technology	µm		0.065 µm

PRODUCT PREVIEW

Table 2-1 Characteristics of the C6457 Processor (Part 2 of 2)

HARDWARE FEATURES		TMS320C6457
Product Status	Production Data (PD)	PD
Device Part Numbers	(For more details on the C64x+™ DSP part numbering, see Figure 2-12)	TMS320C6457CMH/GMH
End of Table 2-1		

The C64x+ Central Processing Unit (CPU) consists of eight functional units, two register files, and two data paths as shown in Figure 2-1. The two general-purpose register files (A and B) each contain 32 32-bit registers for a total of 64 registers. The general-purpose registers can be used for data or can be data address pointers. The data types supported include packed 8-bit data, packed 16-bit data, 32-bit data, 40-bit data, and 64-bit data. Values larger than 32 bits, such as 40-bit-long or 64-bit-long values are stored in register pairs, with the 32 LSBs of data placed in an even register and the remaining 8 or 32 MSBs in the next upper register (which is always an odd-numbered register).

The eight functional units (.M1, .L1, .D1, .S1, .M2, .L2, .D2, and .S2) are each capable of executing one instruction every clock cycle. The .M functional units perform all multiply operations. The .S and .L units perform a general set of arithmetic, logical, and branch functions. The .D units primarily load data from memory to the register file and store results from the register file into memory.

The C64x+ CPU extends the performance of the C64x core through enhancements and new features.

Each C64x+ .M unit can perform one of the following each clock cycle: one 32 × 32 bit multiply, two 16 × 16 bit multiplies, two 16 × 32 bit multiplies, four 8 × 8 bit multiplies, four 8 × 8 bit multiplies with add operations, and four 16 × 16 multiplies with add/subtract capabilities (including a complex multiply). There is also support for Galois field multiplication for 8-bit and 32-bit data. Many communications algorithms such as FFTs and modems require complex multiplication. The complex multiply (CMPY) instruction takes four 16-bit inputs and produces a 32-bit real and a 32-bit imaginary output. There are also complex multiplies with rounding capability that produces one 32-bit packed output that contain 16-bit real and 16-bit imaginary values. The 32 × 32 bit multiply instructions provide the extended precision necessary for audio and other high-precision algorithms on a variety of signed and unsigned 32-bit data types.

The .L or (Arithmetic Logic Unit) now incorporates the ability to do parallel add/subtract operations on a pair of common inputs. Versions of this instruction exist to work on 32-bit data or on pairs of 16-bit data performing dual 16-bit add and subtracts in parallel. There are also saturated forms of these instructions. The C64x+ core enhances the .S unit in several ways. In the C64x core, dual 16-bit MIN2 and MAX2 comparisons were only available on the .L units. On the C64x+ core they are also available on the .S unit which increases the performance of algorithms that do searching and sorting. Finally, to increase data packing and unpacking throughput, the .S unit allows sustained high performance for the quad 8-bit/16-bit and dual 16-bit instructions. Unpack instructions prepare 8-bit data for parallel 16-bit operations. Pack instructions return parallel results to output precision including saturation support.

Other new features include:

- **SPLOOP** — A small instruction buffer in the CPU that aids in creation of software pipelining loops where multiple iterations of a loop are executed in parallel. The SPLOOP buffer reduces the code size associated with software pipelining. Furthermore, loops in the SPLOOP buffer are fully interruptible.
- **Compact Instructions** — The native instruction size for the C6000 devices is 32 bits. Many common instructions such as MPY, AND, OR, ADD, and SUB can be expressed as 16 bits if the C64x+ compiler can restrict the code to use certain registers in the register file. This compression is performed by the code generation tools.
- **Instruction Set Enhancements** — As noted above, there are new instructions such as 32-bit multiplications, complex multiplications, packing, sorting, bit manipulation, and 32-bit Galois field multiplication.

PRODUCT PREVIEW

2009 Texas Instruments Incorporated

- **Exception Handling** — Intended to aid the programmer in isolating bugs. The C64x+ CPU is able to detect and respond to exceptions, both from internally detected sources (such as illegal op-codes) and from system events (such as a watchdog time expiration).
- **Privilege** — Defines user and supervisor modes of operation, allowing the operating system to give a basic level of protection to sensitive resources. Local memory is divided into multiple pages, each with read, write, and execute permissions.
- **Time-Stamp Counter** — Primarily targeted for Real-Time Operating System (RTOS) robustness, a free-running time-stamp counter is implemented in the CPU, which is ***not*** sensitive to system stalls.

For more details on the C64x+ CPU and its enhancements over the C64x architecture, see the following documents:

- *TMS320C64x/C64x+ DSP CPU and Instruction Set Reference Guide* (literature number SPRU732)
- *TMS320C64x+ DSP Cache User's Guide* (literature number SPRU862)
- *TMS320C64x+ Megamodule Reference Guide* (literature number SPRU871)
- *TMS320C64x to TMS320C64x+ CPU Migration Guide* (literature number SPRAA84)

PRODUCT PREVIEW

PRODUCT PREVIEW

Figure 2-1 shows the DSP core functional units and data paths.

Figure 2-1 TMS320C64x+ CPU (DSP Core) Data Paths

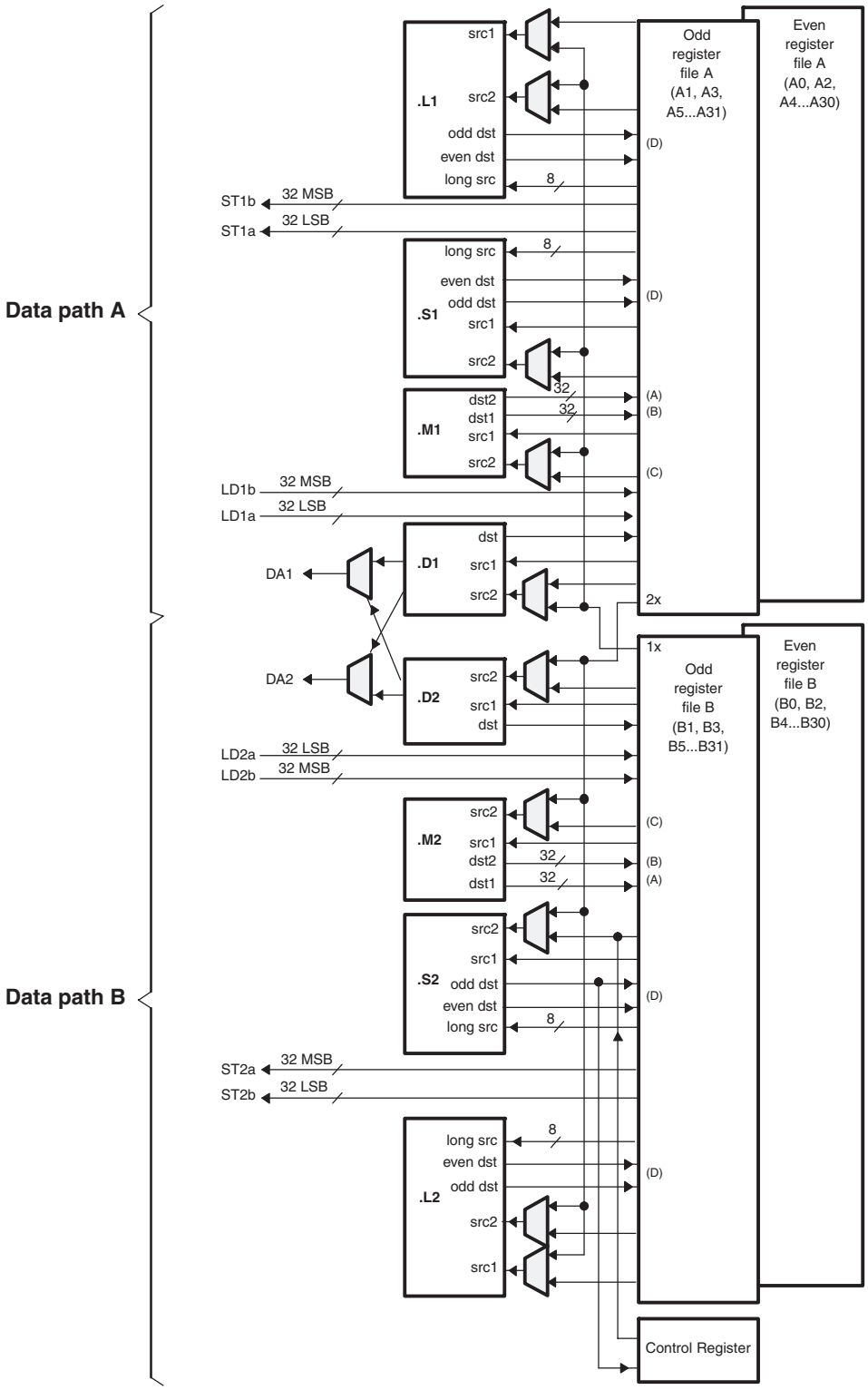

(A) On .M unit, dst2 is 32 MSB. ____**(B)** On .M unit, dst1 is 32 LSB. ____**(C)** On C64x CPU .M unit, src2 is 32 bits; on C64x+ CPU .M unit, src2 is 64 bits.
(D) On .L and .S units, odd dst connects to odd register files and even dst connects to even register files.

2.3 Memory Map Summary

Table 2-2 shows the memory map address ranges of the TMS320C6457 device. The external memory configuration register address ranges in the C6457 device begin at the hex address location 0x7000 0000 for EMIFA and hex address location 0x7800 0000 for DDR2 Memory Controller.

Table 2-2 TMS320C6457 Memory Map Summary (Part 1 of 3)

MEMORY BLOCK DESCRIPTION	BLOCK SIZE (BYTES)	HEX ADDRESS RANGE
Reserved	8M	0000 0000 - 007F FFFF
L2 SRAM	2M	0080 0000 - 009F FFFF
Reserved	4M	00A0 0000 - 00DF FFFF
L1P SRAM	32K	00E0 0000 - 00E0 7FFF
Reserved	1M - 32K	00E0 8000 - 00EF FFFF
L1D SRAM	32K	00F0 0000 - 00F0 7FFF
Reserved	1M -32K	00F0 8000 - 00FF FFFF
Reserved	8M	0100 0000 - 017F FFFF
C64x+ Megamodule Registers	4M	0180 0000 - 01BF FFFF
Reserved	12.5M	01C0 0000 - 0287 FFFF
HPI Control Registers	256	0288 0000 - 0288 00FF
Reserved	2K - 256	0288 0100 - 0288 07FF
Chip-Level Registers	1K	0288 0800 - 0288 0BFF
Reserved	253K	0288 0C00 - 028B FFFF
McBSP 0 Registers	256	028C 0000 - 028C 00FF
Reserved	256K - 256	028C 0100 - 028F FFFF
McBSP 1 Registers	256	0290 0000 - 0290 00FF
Reserved	256K - 256	0290 0100 - 0293 FFFF
Timer 0 Registers	128	0294 0000 - 0294 007F
Reserved	256K - 128	0294 0080 - 0297 FFFF
Timer 1 Registers	128	0298 0000 - 0298 007F
Reserved	128K - 128	0298 0080 - 0299 FFFF
PLL Controller (including Reset Controller) Registers	512	029A 0000 - 029A 01FF
Reserved	384K - 512	029A 0200 - 029F FFFF
EDMA3 Channel Controller Registers	32K	02A0 0000 - 02A0 7FFF
Reserved	96K	02A0 8000 - 02A1 FFFF
EDMA3 Transfer Controller 0 Registers	1K	02A2 0000 - 02A2 03FF
Reserved	31K	02A2 0400 - 02A2 7FFF
EDMA3 Transfer Controller 1 Registers	1K	02A2 8000 - 02A2 83FF
Reserved	31K	02A2 8400 - 02A2 FFFF
EDMA3 Transfer Controller 2 Registers	1K	02A3 0000 - 02A3 03FF
Reserved	31K	02A3 0400 - 02A3 7FFF
EDMA3 Transfer Controller 3 Registers	1K	02A3 8000 - 02A3 83FF
Reserved	31K	02A3 8400 - 02A3 FFFF
EDMA3 Transfer Controller 4 Registers	1K	02A4 0000 - 02A4 03FF
Reserved	31K	02A4 0400 - 02A4 7FFF
EDMA3 Transfer Controller 5 Registers	1K	02A4 8000 - 02A4 83FF
Reserved	479K	02A4 8400 - 02AB FFFF
Power / Sleep Controller (PSC)	4K	02AC 0000 - 02AC 0FFF

PRODUCT PREVIEW

Table 2-2 TMS320C6457 Memory Map Summary (Part 2 of 3)

MEMORY BLOCK DESCRIPTION	BLOCK SIZE (BYTES)	HEX ADDRESS RANGE
Reserved	60K	02AC 1000 - 02AC FFFF
Embedded Trace Buffer (ETB)	8K	02AD 0000 - 02AD 1FFF
Reserved	184K	02AD 2000 - 02AF FFFF
GPIO Registers	256	02B0 0000 - 02B0 00FF
Reserved	16K - 256	02B0 0100 - 02B0 3FFF
I2C Data and Control Registers	128	02B0 4000 - 02B0 407F
Reserved	240K - 128	02B0 4080 - 02B3 FFFF
UTOPIA Control Registers	512	02B4 0000 - 02B4 01FF
Reserved	256K - 512	02B4 0200 - 02B7 FFFF
VCP2 Control Registers	256	02B8 0000 - 02B8 00FF
Reserved	128K - 256	02B8 0100 - 02B9 FFFF
TCP2_A Control Registers	256	02BA 0000 - 02BA 00FF
TCP2_B Control Registers	256	02BA 0100 - 02BA 01FF
Reserved	640K - 512	02BA 0200 - 02C3 FFFF
SGMII Control	256	02C4 0000 - 02C4 00FF
Reserved	256K - 256	02C4 0100 - 02C7 FFFF
EMAC Control	2K	02C8 0000 - 02C8 07FF
Reserved	2K	02C8 0800 - 02C8 0FFF
EMAC Interrupt Controller	256	02C8 1000 - 02C8 10FF
Reserved	2K - 256	02C8 1100 - 02C8 17FF
MDIO Control Registers	256	02C8 1800 - 02C8 18FF
Reserved	2K - 256	02C8 1900 - 02C8 1FFF
EMAC Descriptor Memory	8K	02C8 2000 - 02C8 3FFF
Reserved	496K	02C8 4000 - 02CF FFFF
RapidIO Control Registers	132K	02D0 0000 - 02D2 0FFF
Reserved	892K	02D2 1000 - 02DF FFFF
RapidIO Descriptor Memory	16K	02E0 0000 - 02E0 3FFF
Reserved	1M - 16K	02E0 4000 - 02EF FFFF
Reserved	1M	02F0 0000 - 02FF FFFF
Reserved	208M	0300 0000 - 0FFF FFFF
Reserved	512M	1000 0000 - 2FFF FFFF
McBSP 0 Data	256	3000 0000 - 3000 00FF
Reserved	64M - 256	3000 0100 - 33FF FFFF
McBSP 1 Data	256	3400 0000 - 3400 00FF
Reserved	128M - 256	3400 0100 - 3BFF FFFF
L3 ROM	64K	3C00 0000 - 3C00 FFFF
Reserved	16M - 64K	3C01 0000 - 3CFF FFFF
UTOPIA Receive (RX) Data	128	3D00 0000 - 3D00 007F
Reserved	896	3D00 0080 - 3D00 03FF
UTOPIA Transmit (TX) Data	128	3D00 0400 - 3D00 047F
Reserved	304M - 1152	3D00 0480 - 4FFF FFFF
TCP2_A Data	1M	5000 0000 - 500F FFFF
TCP2_B Data	1M	5010 0000 - 501F FFFF
Reserved	126M	5020 0000 - 57FF FFFF

PRODUCT PREVIEW

2009 Texas Instruments Incorporated

Table 2-2 TMS320C6457 Memory Map Summary (Part 3 of 3)

MEMORY BLOCK DESCRIPTION	BLOCK SIZE (BYTES)	HEX ADDRESS RANGE
VCP2 Data	64K	5800 0000 - 5800 FFFF
Reserved	384M - 64K	5801 0000 - 6FFF FFFF
EMIFA (EMIF64) Configuration Registers	256	7000 0000 - 7000 00FF
Reserved	128M - 256	7000 0100 - 77FF FFFF
DDR2 EMIF Configuration Registers	256	7800 0000 - 7800 00FF
Reserved	128M - 256	7800 0100 - 7FFF FFFF
Reserved	512M	8000 0000 - 9FFF FFFF
EMIFA CE2 Data -SBSRAM/Async	8M	A000 0000 - A07F FFFF
Reserved	256M - 8M	A080 0000 - AFFF FFFF
EMIFA CE3 Data -SBSRAM/Async	8M	B000 0000 - B07F FFFF
Reserved	256M - 8M	B080 0000 - BFFF FFFF
EMIFA CE4 Data -SBSRAM/Async	8M	C000 0000 - C07F FFFF
Reserved	256M - 8M	C080 0000 - CFFF FFFF
EMIFA CE5 Data -SBSRAM/Async	8M	D000 0000 - D07F FFFF
Reserved	256M - 8M	D080 0000 - DFFF FFFF
DDR2 EMIF CE0 Data	512M	E000 0000 - FFFF FFFF
End of Table 2-2		

PRODUCT PREVIEW

2.4 Boot Sequence

The boot sequence is a process by which the DSP's internal memory is loaded with program and data sections. The DSP's internal registers are programmed with predetermined values. The boot sequence is started automatically after each power-on reset, warm reset, and system reset. A local reset to an individual C64x+ Megamodule should not affect the state of the hardware boot controller on the device. For more details on the initiators of the resets, see Section 7.6 "Reset Controller" on page 123.

The C6457 supports several boot processes begins execution at the ROM base address, which contains the bootloader code necessary to support various device boot modes. The boot processes are software driven; using the BOOTMODE[3:0] device configuration inputs to determine the software configuration that must be completed.

2.5 Boot Modes Supported

The device supports several boot processes, which leverage the internal boot ROM. Most boot processes are software driven, using the BOOTMODE[3:0] device configuration inputs to determine the software configuration that must be completed. From a hardware perspective, there are two possible boot modes:

- **Public ROM Boot** - C64x+ Megamodule is released from reset and begins executing from the L3 ROM base address. After performing the boot process (e.g., from I^2C ROM, Ethernet, or RapidIO), the C64x+ Megamodule then begins execution from the L2 RAM base address.
- **Secure ROM Boot** - On secure devices, the C64x+ Megamodule is released from reset and begin executing from secure ROM. Software in the secure ROM will free up internal RAM pages, after which the C64x+ Megamodule initiates the boot process. The C64x+ Megamodule performs any authentication and decryption required on the bootloaded image prior to beginning execution.

PRODUCT PREVIEW

The boot process performed by the C64x+ Megamodule in public ROM boot and secure ROM boot are determined by the BOOTMODE[3:0] value in the DEVSTAT register. The C64x+ Megamodule reads this value, and then executes the associated boot process in software. Table 2-3 shows the supported boot modes.

Table 2-3 TMS320C6457 Supported Boot Modes

Mode Name	Bootmode[3:0]	Description
No Boot	0000b	No Boot
I^2C Master Boot A	0001b	Slave I^2C address is 0x50. The C64x+ Megamodule configures I^2C, acts as a master to the I^2C bus and copies data from an I^2C EEPROM or a device acting as an I^2C slave to the DSP using a predefined boot table format. The destination address and length are contained within the boot table.
I^2C Master Boot B	0010b	Similar to I^2C boot A except the slave I^2C address is 0x51.
I^2C Slave Boot	0011b	The C64x+ Megamodule configures I^2C and acts as a slave and will accept data and code section packets through the I2C interface. It is required that an I^2C master is present in the system.
HPI Boot	0100b	Host boot.
EMIFA Boot	0101b	External memory boot from ACE3 space (0xB0000000 address).
EMAC Master Boot	0110b	TI Ethernet Boot. The C64x+ Megamodule configures EMAC and EDMA, if required, and brings the code image into the internal on-chip memory via the protocol defined by the boot method (EMAC bootloader).
EMAC Slave Boot	0111b	
EMAC Forced-Mode Boot	1000b	
Reserved	1001b	Reserved
RapidIO Boot (Config 0)	1010b	The C64x+ Megamodule configures the SRIO and an external host loads the application via SRIO peripheral, using directIO protocol. A doorbell interrupt is used to indicate that the code has been loaded. For more details on the RapidIO configurations, see Table 2-4.
RapidIO Boot (Config 1)	1011b	
RapidIO Boot (Config 2)	1100b	
RapidIO Boot (Config 3)	1101b	
End of Table 2-3		

The C64x+ Megamodule configures Serial RapidIO, EMAC, and EDMA, if required, and brings the code image into the internal on-chip memory via the protocol defined by the boot method (SRIO EMAC bootloader).

Table 2-4 Serial RapidIO (SRIO) Supported Boot Modes

SRIO Boot Mode	SerDes Clock	Link Rate	SRIO Boot Configuration
Bootmode 10 - Config 0	125 MHz	1.25 Gbps	Four 1× SRIO links
Bootmode 11 - Config 1	125 MHz	3.125 Gbps	One 4× SRIO link
Bootmode 12 - Config 2	156.25 MHz	1.25 Gbps	One 4× SRIO link
Bootmode 13 - Config 3	156.25 MHz	3.125 Gbps	One 4× SRIO link
End of Table 2-4			

All the other BOOTMODE[3:0] modes are reserved.

2.5.1 Second-Level Bootloaders

Any of the boot modes can be used to download a second-level bootloader. A second-level bootloader allows for any level of customization to current boot methods as well as the definition of a completely customized boot.

2009 Texas Instruments Incorporated

2.6 Pin Assignments

2.6.1 Pin Map

Figure 2-2 through Figure 2-5 show the C6457 pin assignments in four quadrants (A, B, C, and D).

Figure 2-2 TMS320C6457 Pin Map (Bottom View) [Quadrant A]

	1	2	3	4	5	6	7	8	9	10	11	12	13	14	
AH	V_{DDS18_1}	V_{SS}	TCLK	EMU4	EMU2	CORECLKP	CORECLKN	V_{SS}	RIOTXN1	RIOTXP1	V_{SS}	RIORXN1	RIORXP1	SGMIITXP	AH
AG	V_{SS}	EMU7	EMU8	EMU5	V_{DDS18_1}	RIOSGMII CLKN	RIOSGMII CLKP	RIORXN0	RIORXP0	V_{SS}	V_{DDT}	V_{SS}	RIOTXN3	RIOTXP3	AG
AF	TDO	EMU11	EMU13	EMU6	V_{SS}	ALTCORE CLK	RSV09	V_{SS}	V_{DDT}	RIORXP1	RIORXN1	RSV16	RIOTXN2	RIOTXP2	AF
AE	EMU12	$\overline{TRST}$	EMU10	EMU3	EMU1	CORE CLKSEL	RSV08	RIOTXP0	RIOTXN0	V_{DDR4}	V_{SS}	RIORXP3	RIORXN3	V_{SS}	AE
AD	EMU15	V_{SS}	EMU16	EMU9	EMU0	RSV24	SYSCLK OUT	V_{SS}	V_{DDT}	V_{SS}	V_{DDT}	V_{SS}	V_{DDT}	V_{SS}	AD
AC	EMU14	EMU18	V_{DDS18_1}	RSV01	$V_{DDA18V1}$	RSV20	RSV21	V_{DDS18_1}	V_{SS}	V_{DDA}	V_{SS}	V_{DDA}	V_{SS}	V_{DDA}	AC
AB	TDI	RSV02	CLKX0	RSV03	RSV12	V_{SS}	V_{DDS18_1}	V_{SS}	V_{SS}	V_{SS}	V_{SS}	V_{SS}	V_{SS}	V_{SS}	AB
AA	EMU17	V_{SS}	CLKX1	CLKS0	RSV13	V_{DDS18_1}	V_{SS}								AA
Y	CLKS1	TMS	DX1	CLKR1	CLKR0	DR0	V_{DDS18_1}								Y
W	HD11	HD00	DR1	FSX0	FSX1	DX0	V_{SS}			V_{SS}	V_{DDD}	V_{SS}	V_{DDD}	V_{SS}	W
V	HD22	HD25	V_{DDS33}	FSR0	FSR1	V_{DDS18_1}	V_{SS}			V_{DD}	V_{SS}	V_{DDD}	V_{SS}	V_{DDD}	V
U	HD21	HD13	V_{SS}	HD05	HD27	HD23	V_{DDS33}			V_{SS}	V_{DD}	V_{SS}	V_{DDD}	V_{SS}	U
T	HD19	HD15	HD09	HD03	HD29	HD06	V_{SS}			RSV23	V_{SS}	V_{DD}	V_{SS}	V_{DD}	T
R	HD17	V_{SS}	V_{DDS33}	HD07	HD10	HD04	V_{DDS33}			RSV23	V_{DD}	V_{SS}	V_{DD}	V_{SS}	R
	1	2	3	4	5	6	7	8	9	10	11	12	13	14	

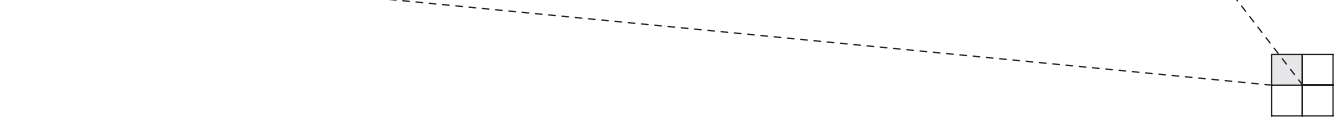

PRODUCT PREVIEW

Figure 2-3 TMS320C6457 Pin Map (Bottom View) [Quadrant B]

	15	16	17	18	19	20	21	22	23	24	25	26	27	28	
AH	SGMIITXN	V_{SS}	V_{DDT}	MDCLK	MDIO	TINP0L	RSV18	RSV29	$\overline{RESET}$	V_{DDS33_1}	AED05	AED06	V_{SS}	V_{DDS33_1}	AH
AG	V_{SS}	RSV17	V_{SS}	V_{SS}	TINP1L	TOUT0L	RSV19	$\overline{POR}$	RSV28	V_{SS}	AED14	AED02	AED20	V_{SS}	AG
AF	V_{DDT}	SGMIIRXN	SGMIIRXP	V_{DDS18_2}	TOUT1L	RSV14	RSV15	RSV27	$\overline{RESETSTAT}$	AED03	AED09	AED16	AED18	AED30	AF
AE	V_{SS}	V_{DDR3}	V_{SS}	V_{SS}	NMI	RSV06	RSV07	RSV26	RSV22	AED01	AOE	AED10	AED15	AED19	AE
AD	V_{DDT}	V_{SS}	V_{DDT}	V_{DDS18_2}	V_{SS}	RSV04	RSV05	V_{DDS18_2}	V_{SS}	V_{DDS33_1}	AED07	AED12	AED04	AED17	AD
AC	V_{SS}	V_{DDA}	V_{SS}	V_{SS}	V_{DDS18_2}	V_{SS}	V_{DDS18_2}	V_{SS}	V_{DDS33_1}	AED00	AED11	AED08	AED13	AED21	AC
AB	V_{SS}	V_{SS}	V_{SS}	V_{DDS18_2}	V_{SS}	V_{DDS18_2}	V_{SS}	V_{DDS33_1}	V_{SS}	AED24	AED26	AED28	V_{SS}	V_{DDS33_1}	AB
AA								V_{SS}	V_{DDS33_1}	$\overline{ASDWE}$	AED23	AED25	AED22	AED29	AA
Y								V_{DDS33_1}	V_{SS}	$\overline{ABE01}$	$\overline{ABE00}$	AED31	AED27	$\overline{ABE03}$	Y
W	V_{DDD}	V_{SS}	V_{DD}	V_{SS}	V_{DD}			V_{SS}	V_{DDS33_1}	ARNW	$\overline{ACE3}$	$\overline{ACE2}$	$\overline{ABE02}$	$\overline{ABE07}$	W
V	V_{SS}	V_{DD}	V_{SS}	V_{DD}	V_{SS}			V_{DDS33_1}	V_{SS}	ABA1	ABA0	$\overline{ACE5}$	V_{SS}	AECLKOUT	V
U	V_{DD}	V_{SS}	V_{DD}	V_{SS}	V_{DDMON}			$V_{DD33MON}$	V_{SS}	V_{SS}	AEA00	AEA01	$\overline{ACE4}$	AEA05	U
T	V_{SS}	V_{DD}	V_{SS}	V_{DD}	V_{SS}			V_{DDS33_1}	V_{SS}	AEA14	AEA11	AEA02	AEA03	AEA06	T
R	V_{DD}	V_{SS}	V_{DD}	V_{SS}	V_{DD}			V_{SS}	V_{DDS33_1}	AEA08	AADS	AEA13	AEA04	$\overline{AHOLD}$	R
	15	16	17	18	19	20	21	22	23	24	25	26	27	28	



PRODUCT PREVIEW

2009 Texas Instruments Incorporated

Figure 2-4 TMS320C6457 Pin Map (Bottom View) [Quadrant C]



	15	16	17	18	19	20	21	22	23	24	25	26	27	28	
P	V_{SS}	V_{DD}	V_{SS}	V_{DD}	V_{SS}			V_{DDS33_1}	V_{SS}	AEA19	AEA16	AEA15	V_{DDS33_1}	V_{SS}	P
N	V_{DD}	V_{SS}	V_{DD}	V_{SS}	V_{DD}			V_{SS}	V_{DDS33_1}	AEA10	$\overline{\text{AHOLDA}}$	AEA07	AEA12	AECLKIN	N
M	V_{SS}	V_{DD}	V_{SS}	V_{DD}	V_{SS}			V_{DDS33_1}	V_{SS}	AEA17	AEA18	AEA09	V_{DDS33_1}	V_{SS}	M
L	V_{DD}	V_{SS}	V_{DD}	V_{SS}	V_{DD}			V_{SS}	V_{DDS33_1}	AED33	$\overline{\text{ABE06}}$	ABUSREQ0	$\overline{\text{ABE04}}$	$\overline{\text{ABE05}}$	L
K	V_{SS}	V_{DD}	V_{SS}	V_{DD}	V_{SS}			V_{DDS33_1}	V_{SS}	AED38	AED46	AED32	AED34	AARDY	K
J								V_{SS}	V_{DDS33_1}	AED47	AED45	AED44	AED42	AED40	J
H								V_{DDS33_1}	V_{SS}	AED55	AED54	AED43	V_{DDS33_1}	V_{SS}	H
G	V_{DDS18}	V_{SS}	V_{DDS18}	V_{SS}	V_{DDS18}	V_{SS}	V_{DDS18}	V_{SS}	$V_{DD18MON}$	AED63	AED36	AED50	AED48	AED35	G
F	V_{SS}	V_{DDS18}	DDRA00	V_{DDS18}	V_{SS}	DDRRCVEN OUT1	V_{SS}	V_{SS}	GP15	SCL	V_{SS}	AED56	AED52	AED37	F
E	DDRODT	DDRA04	DDRA01	V_{SS}	DDRDQS2P	DDRRCVEN IN1	V_{DDS18}	DDRDQS3P	V_{DDS18}	SDA	V_{DDS33_1}	AED59	V_{DDS33_1}	V_{SS}	E
D	DDRA08	DDRA05	DDRA02	DDRD19	DDRDQS2N	DDRD23	DDRD27	DDRDQS3N	GP14	GP12	AED57	AED53	AED58	AED39	D
C	DDRA09	DDRA06	DDRA03	DDRD18	DDRDQM2	DDRD22	DDRD26	DDRDQM3	GP13	GP09	GP11	AED61	AED60	AED41	C
B	DDRA10	DDRA07	DDRCLK OUT_N1	DDRD16	V_{DDS18}	DDRD21	DDRD25	V_{DDS18}	DDRD29	DDRD31	GP08	AED49	AED51	V_{SS}	B
A	DDRA11	PTV18	DDRCLK OUT_P1	DDRD17	V_{SS}	DDRD20	DDRD24	V_{SS}	DDRD28	DDRD30	GP10	AED62	DDRSLRATE	V_{DDS33_1}	A
	15	16	17	18	19	20	21	22	23	24	25	26	27	28	

PRODUCT PREVIEW

Figure 2-5 TMS320C6457 Pin Map (Bottom View) [Quadrant D]

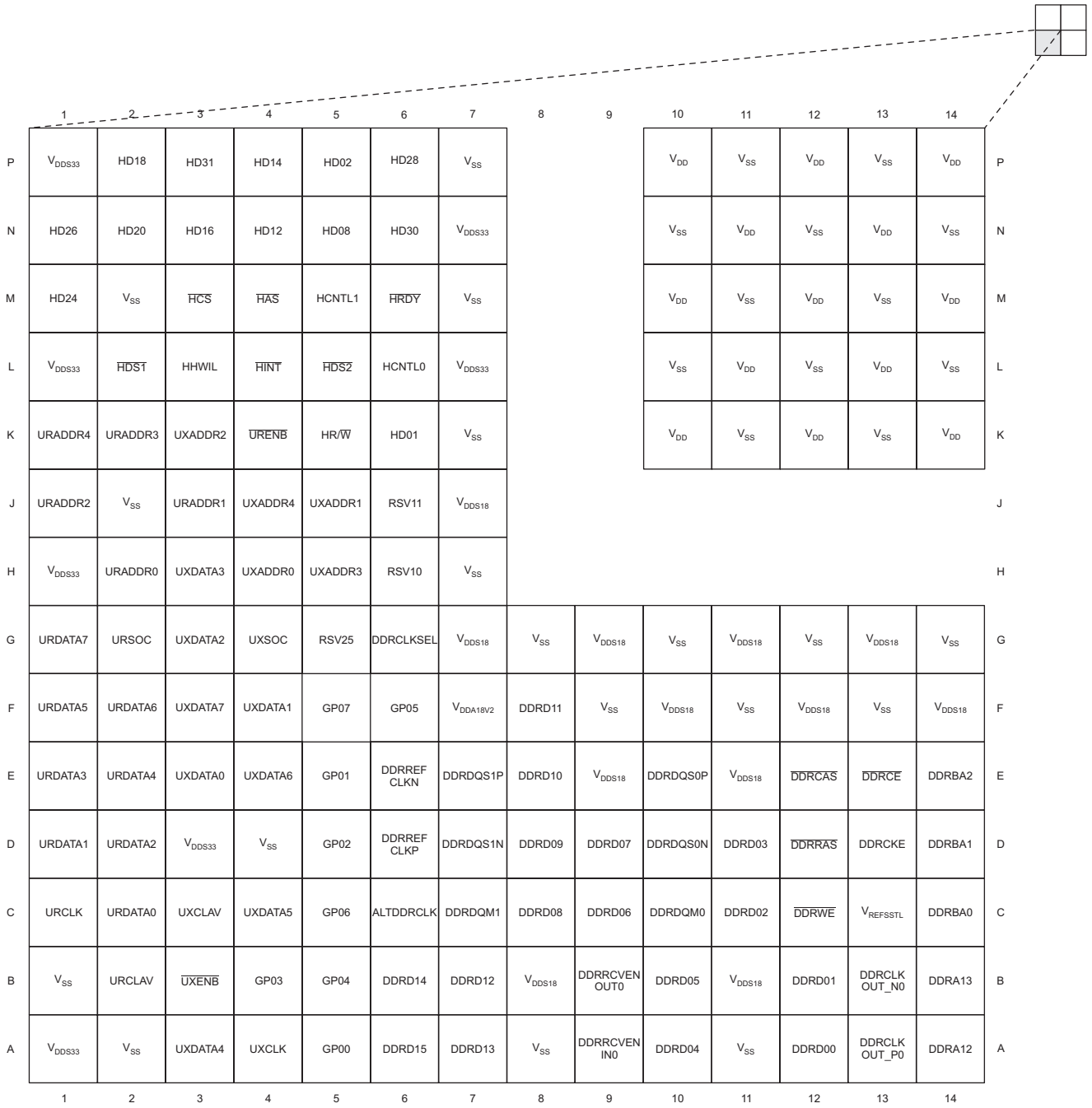

	1	2	3	4	5	6	7	8	9	10	11	12	13	14	
P	V_{DDS33}	HD18	HD31	HD14	HD02	HD28	V_{SS}			V_{DD}	V_{SS}	V_{DD}	V_{SS}	V_{DD}	P
N	HD26	HD20	HD16	HD12	HD08	HD30	V_{DDS33}			V_{SS}	V_{DD}	V_{SS}	V_{DD}	V_{SS}	N
M	HD24	V_{SS}	$\overline{HCS}$	$\overline{HAS}$	HCNTL1	$\overline{HRDY}$	V_{SS}			V_{DD}	V_{SS}	V_{DD}	V_{SS}	V_{DD}	M
L	V_{DDS33}	$\overline{HDS1}$	HHWIL	$\overline{HINT}$	$\overline{HDS2}$	HCNTL0	V_{DDS33}			V_{SS}	V_{DD}	V_{SS}	V_{DD}	V_{SS}	L
K	URADDR4	URADDR3	UXADDR2	$\overline{URENB}$	HR/$\overline{W}$	HD01	V_{SS}			V_{DD}	V_{SS}	V_{DD}	V_{SS}	V_{DD}	K
J	URADDR2	V_{SS}	URADDR1	UXADDR4	UXADDR1	RSV11	V_{DDS18}								J
H	V_{DDS33}	URADDR0	UXDATA3	UXADDR0	UXADDR3	RSV10	V_{SS}								H
G	URDATA7	URSOC	UXDATA2	UXSOC	RSV25	DDRCLKSEL	V_{DDS18}	V_{SS}	V_{DDS18}	V_{SS}	V_{DDS18}	V_{SS}	V_{DDS18}	V_{SS}	G
F	URDATA5	URDATA6	UXDATA7	UXDATA1	GP07	GP05	$V_{DDA18V2}$	DDRD11	V_{SS}	V_{DDS18}	V_{SS}	V_{DDS18}	V_{SS}	V_{DDS18}	F
E	URDATA3	URDATA4	UXDATA0	UXDATA6	GP01	DDRREF CLKN	DDRDQS1P	DDRD10	V_{DDS18}	DDRDQS0P	V_{DDS18}	$\overline{DDRCAS}$	$\overline{DDRCE}$	DDRBA2	E
D	URDATA1	URDATA2	V_{DDS33}	V_{SS}	GP02	DDRREF CLKP	DDRDQS1N	DDRD09	DDRD07	DDRDQS0N	DDRD03	$\overline{DDRRAS}$	DDRCKE	DDRBA1	D
C	URCLK	URDATA0	UXCLAV	UXDATA5	GP06	ALTDDRCLK	DDRDQM1	DDRD08	DDRD06	DDRDQM0	DDRD02	$\overline{DDRWE}$	$V_{REFSSTL}$	DDRBA0	C
B	V_{SS}	URCLAV	$\overline{UXENB}$	GP03	GP04	DDRD14	DDRD12	V_{DDS18}	DDRRCVEN OUT0	DDRD05	V_{DDS18}	DDRD01	DDRCLK OUT_N0	DDRA13	B
A	V_{DDS33}	V_{SS}	UXDATA4	UXCLK	GP00	DDRD15	DDRD13	V_{SS}	DDRRCVEN IN0	DDRD04	V_{SS}	DDRD00	DDRCLK OUT_P0	DDRA12	A
	1	2	3	4	5	6	7	8	9	10	11	12	13	14	

PRODUCT PREVIEW

2009 Texas Instruments Incorporated

2.7 Signal Groups Description

Figure 2-6 shows the CPU and core peripheral signal groups.

Figure 2-6 CPU and Peripheral Signals

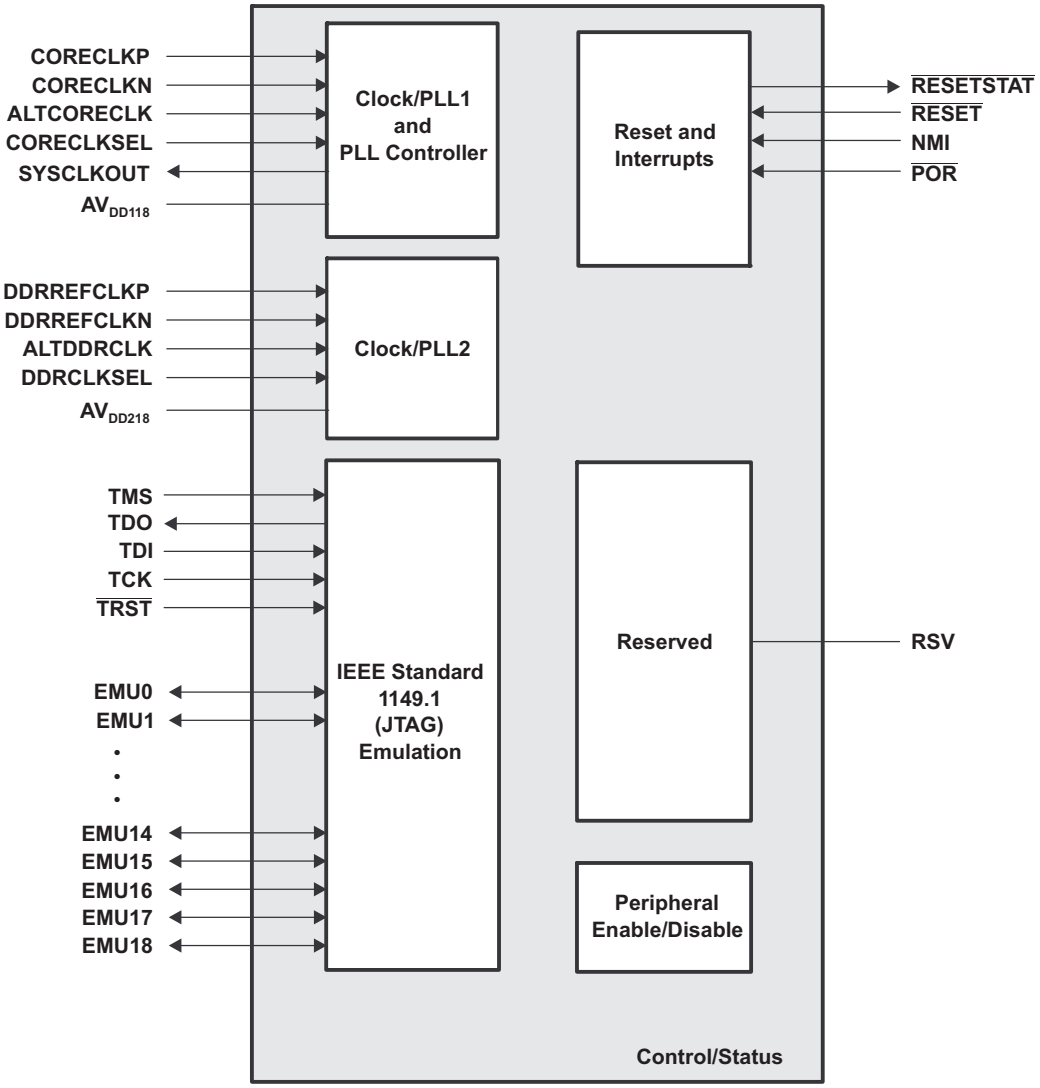

PRODUCT PREVIEW

Figure 2-7 shows the timer peripheral I/O, the general purpose I/O, the Serial RapidIO, and the general purpose I/O reference clock, transmit, and receive signals.

Figure 2-7 Timers/GPIO/RapidIO Peripheral Signals

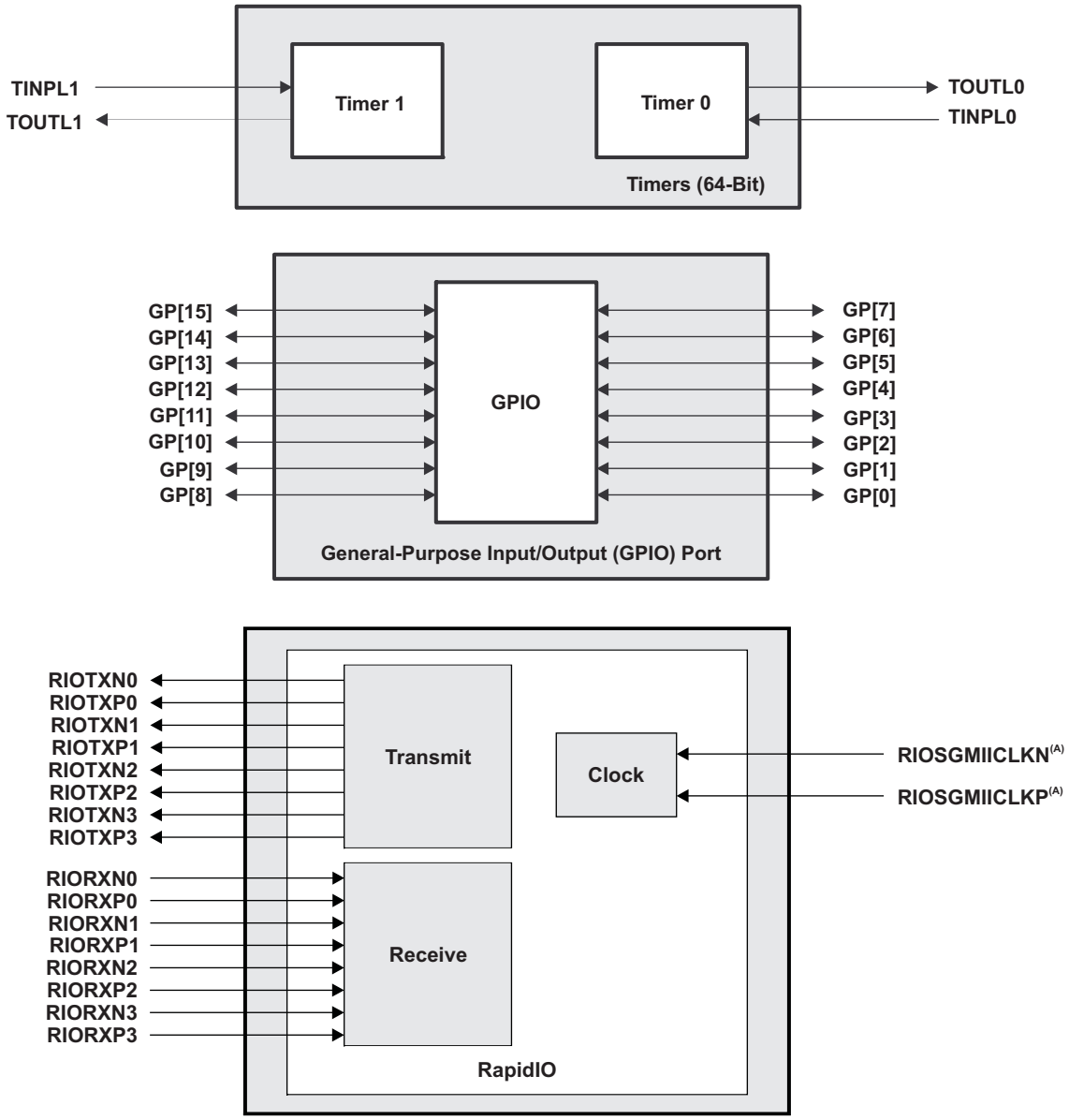

(A) Reference clock to drive RapidIO and SGMII.

PRODUCT PREVIEW

2009 Texas Instruments Incorporated

Figure 2-8 shows the EMIFA and DDR2 peripheral interfaces.

Figure 2-8 EMIFA and DDR2 Memory Controller Peripheral Signals

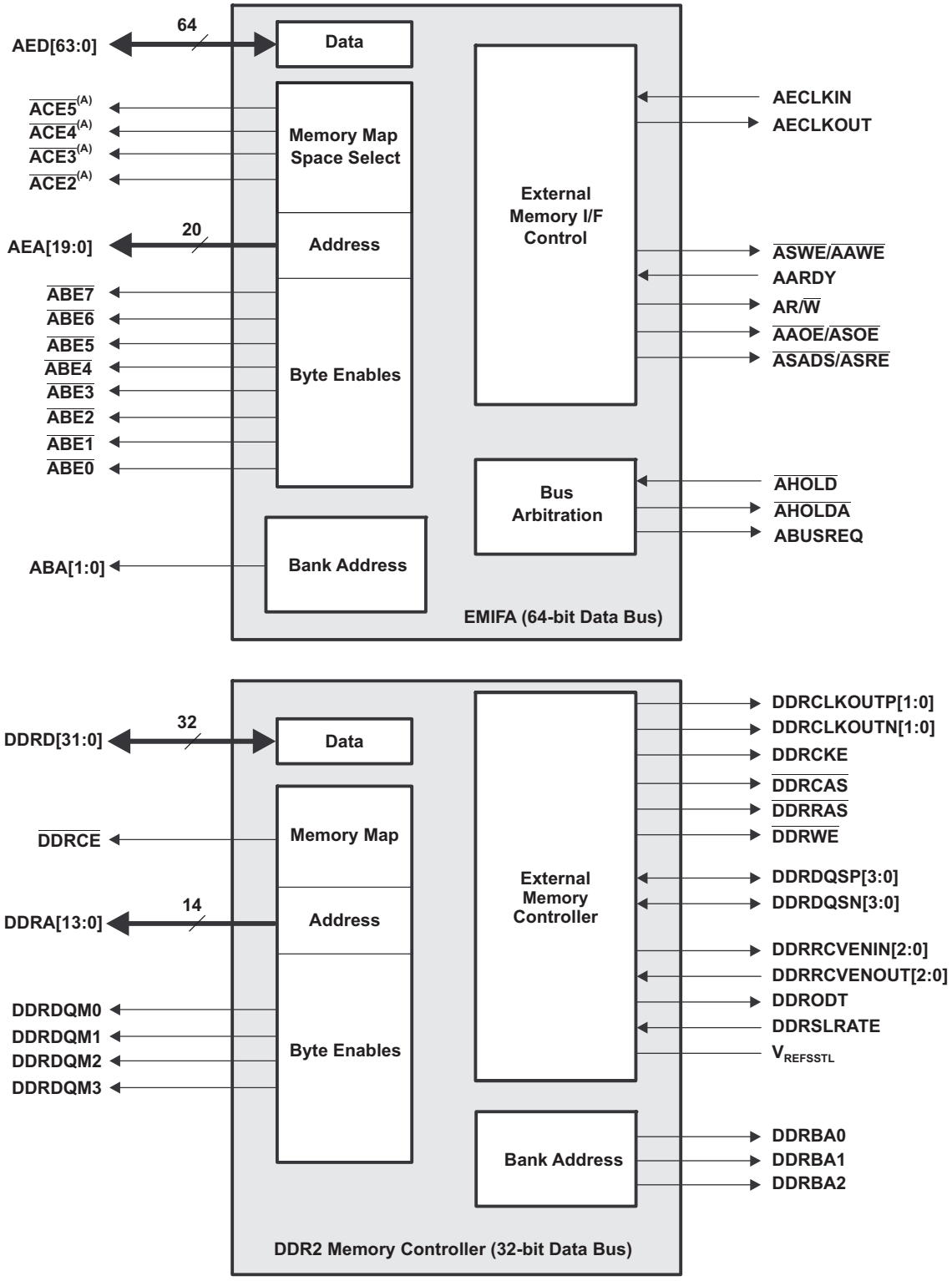

(A) The EMIFA ACE0 and ACE1 are not functionally supported on C6457 devices.

PRODUCT PREVIEW

Figure 2-9 shows the HPI, McBSP, and I^2C peripheral signals.

Figure 2-9 HPI/McBSP/I^2C Peripheral Signals

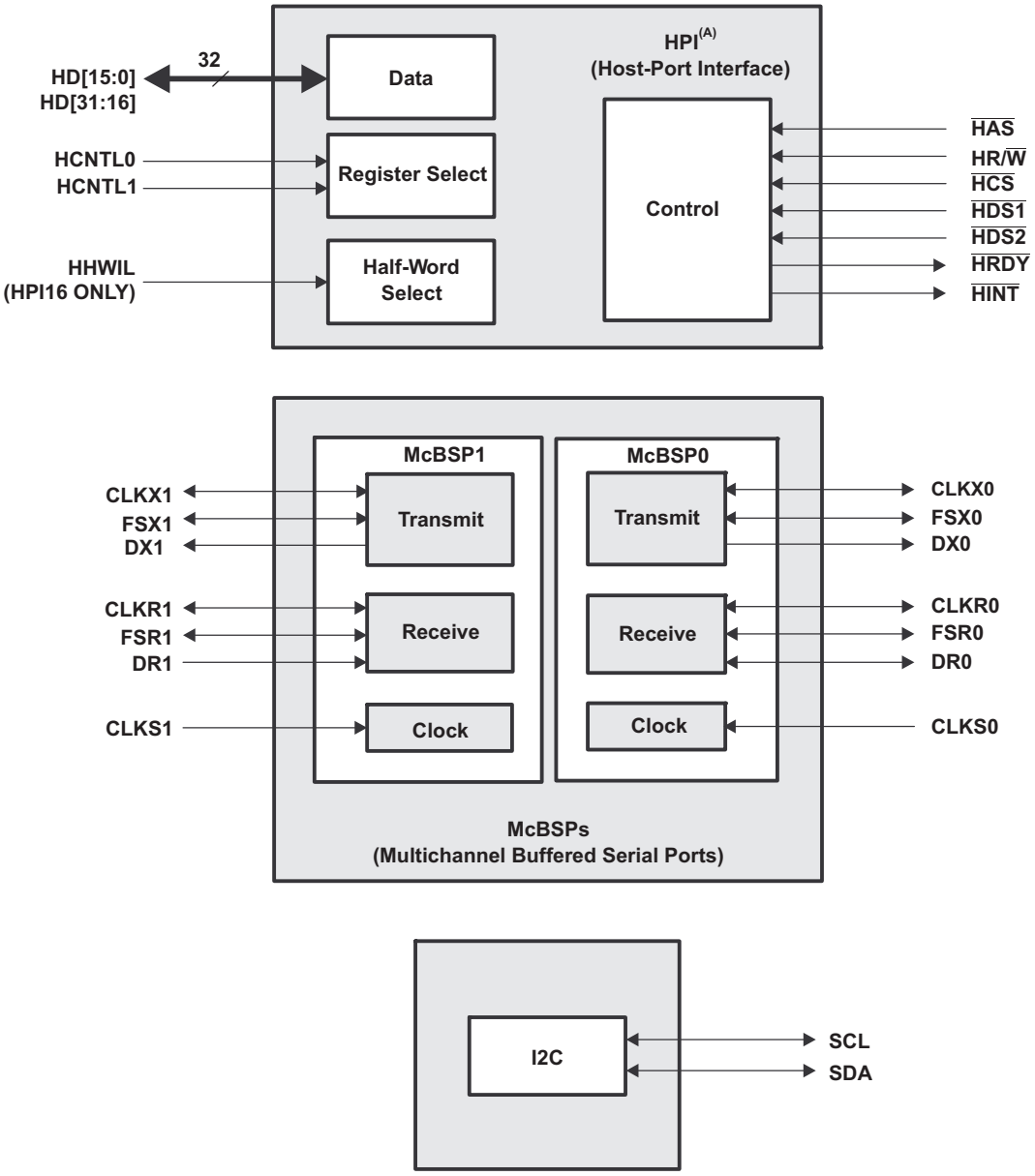

(A) When the HPI is enabled, the number of HPI pins used depends on the HPI configuration (HPI16 or HPI32).

PRODUCT PREVIEW

2009 Texas Instruments Incorporated

Figure 2-10 shows the EMAC/MDIO (SGMII) peripheral signals.

Figure 2-10 EMAC/MDIO (SGMII) Peripheral Signals

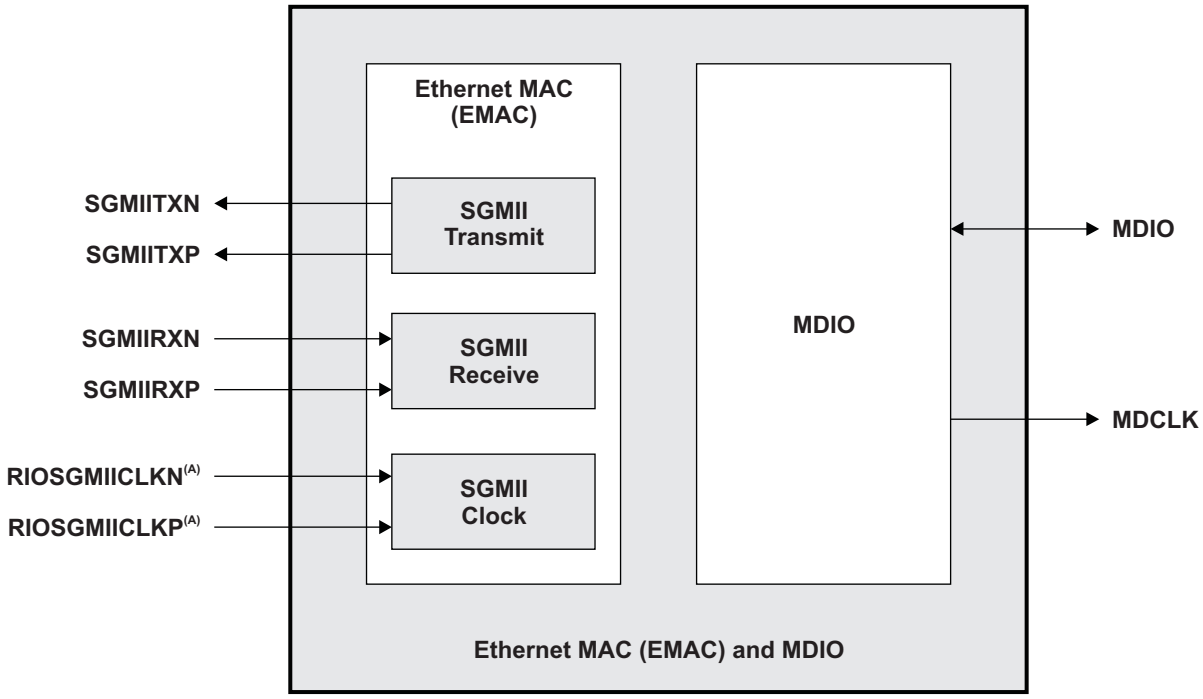

(A) Reference clock to drive RapidIO and SGMII.

PRODUCT PREVIEW

Figure 2-11 shows the UTOPIA peripheral signals.

Figure 2-11 UTOPIA Peripheral Signals

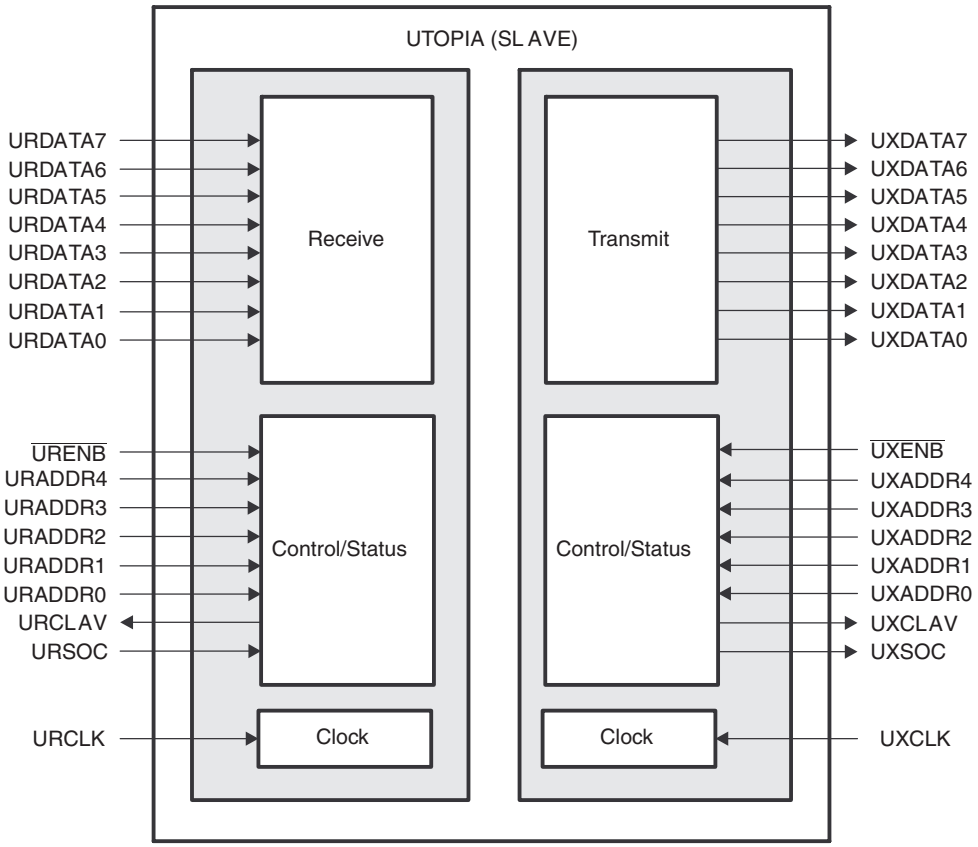

PRODUCT PREVIEW

2009 Texas Instruments Incorporated

2.8 Terminal Functions

The terminal functions table Table 2-6 identifies the external signal names, the associated pin (ball) numbers along with the mechanical package designator, the pin type (I, O/Z, or I/O/Z), whether the pin has any internal pullup/pulldown resistors, and a functional pin description. For more detailed information on device configuration, peripheral selection, multiplexed/shared pins, and pullup/pulldown resistors, see Section 3 "Device Configuration" on page 59.

Use the symbol definitions in Table 2-5 when reading Table 2-6.

Table 2-5 I/O Functional Symbol Definitions

Functional Symbol	Definition	Table 2-6 Column Heading
IPD or IPU	Internal 100-µA pulldown or pullup is provided for this terminal. In most systems, a 1-kΩ resistor can be used to oppose the IPD/IPU. For more detailed information on pulldown/pullup resistors and situations in which external pulldown/pullup resistors are required, see Section 3.6 "Pullup/Pulldown Resistors" on page 63.	IPD/IPU
A	Analog signal	Type
GND	Ground	Type
I	Input terminal	Type
O	Output terminal	Type
S	Supply voltage	Type
Z	Three-state terminal or high impedance	Type
End of Table 2-5		

Table 2-6 Terminal Functions (Part 1 of 22)

Signal Name	Ball No.	Type	IPD/IPU	Description
CLOCK/PLL CONFIGURATIONS				
CORECLKN	AH7	I		Clock Input for PLL1 (differential).
CORECLKP	AH6	I		Clock Input for PLL1 (differential).
ALTCORECLK	AF6			Alternate Core Clock (single-ended) input to main PLL [vs. CORECLK(N|P)].
CORECLKSEL	AE6			Core Clock Select. Selects between CORECLK(N|P) and ALTCORECLK to the Main PLL. • When CORECLKSEL = 0, it selects the differential clock [CORECLK(N|P)]. • When CORECLKSEL = 1, it selects the single-ended clock [ALTCORECLK].
SYSCLKOUT	AD7	O/Z	IPD	SYSCLKOUT is the clock output at 1/10 (default rate) of the device speed.
DDRREFCLKN	E6	I		DDR Reference Clock Input to DDR PLL (differential).
DDRREFCLKP	D6	I		DDR Reference Clock Input to DDR PLL (differential).
ALTDDRCLK	C6	I		Alternate DDR Clock (single-ended) input to DDR PLL [vs. DDRREFCLK(N|P)].
DDRCLKSEL	G6	I		DDR Clock Select. Selects between DDRREFCLK(N|P) and ALTDDRCLK to the DDR PLL. • When DDRCLKSEL = 0, it selects the differential clock [DDRREFCLK(N|P)]. • When DDRCLKSEL = 1, it selects the single-ended clock [ALTDDRCLK].
RIOSGMIICLKN	AG6			RapidIO/SGMII Reference Clock to drive the RapidIO and SGMII SerDes (differential).
RIOSGMIICLKP	AG7			RapidIO/SGMII Reference Clock to drive the RapidIO and SGMII SerDes (differential).

PRODUCT PREVIEW

Table 2-6 Terminal Functions (Part 2 of 22)

Signal Name	Ball No.	Type	IPD/IPU	Description
JTAG EMULATION				
TMS	Y2	I	IPU	JTAG test-port mode select
TDO	AF1	O/Z		JTAG test-port data out
TDI	AB1	I	IPU	JTAG test-port data in
TCK	AH3	I	IPU	JTAG test-port clock
$\overline{\text{TRST}}$	AE2	I	IPD	JTAG test-port reset. For IEEE 1149.1 JTAG compatibility, see 7.22.3.1 "IEEE 1149.1 JTAG Compatibility Statement" on page 206.
EMU0(3)	AD5	I/O/Z	IPU	Emulation pin 0
EMU1(3)	AE5			Emulation pin 1
EMU2	AH5			Emulation pin 2
EMU3	AE4			Emulation pin 3
EMU4	AH4			Emulation pin 4
EMU5	AG4			Emulation pin 5
EMU6	AF4			Emulation pin 6
EMU7	AG2			Emulation pin 7
EMU8	AG3			Emulation pin 8
EMU9	AD4			Emulation pin 9
EMU10	AE3			Emulation pin 10
EMU11	AF2			Emulation pin 11
EMU12	AE1			Emulation pin 12
EMU13	AF3			Emulation pin 13
EMU14	AC1			Emulation pin 14
EMU15	AD1			Emulation pin 15
EMU16	AD3			Emulation pin 16
EMU17	AA1			Emulation pin 17
EMU18	AC2			Emulation pin 18
RESETS, INTERRUPTS, AND GENERAL-PURPOSE INPUT/OUTPUTS				
$\overline{\text{RESET}}$	AH23	I		Device reset
NMI	AE19	I	IPD	Nonmaskable interrupt, edge-driven (rising edge). **NOTE:** Any noise on the NMI pin may trigger an NMI interrupt. Therefore, if the NMI pin is not used, it is recommended that the NMI pin be grounded instead of relying on the IPD.
$\overline{\text{RESETSTAT}}$	AF23	O		Reset Status pin. The $\overline{\text{RESETSTAT}}$ pin indicates when the device is in reset
$\overline{\text{POR}}$	AG22	I		Power on reset.

PRODUCT PREVIEW

2009 Texas Instruments Incorporated

Table 2-6 Terminal Functions (Part 3 of 22)

Signal Name	Ball No.	Type	IPD/IPU	Description
GP15	F23	I/O/Z	IPD	General-purpose input/output (GPIO) pins (I/O/Z). GPIO[15:0] pins are multiplexed at power-on reset for configuration latching: • GPIO[0] is mapped to LENDIAN • GPIO[4:1] are mapped to BOOTMODE[3:0] (see Section 2.5 "Boot Modes Supported" on page 21) • GPIO[8:5] are mapped to DEVNUM[3:0] • GPIO[13:9] are mapped to CFGGP[4:0] • GPIO[14] is mapped to HPIWIDTH • GPIO[15] is mapped to ECLKINSEL
GP14	D23			
GP13	C23			
GP12	D24			
GP11	C25			
GP10	A25			
GP09	C24			
GP08	B25			
GP07	F5			
GP06	C5			
GP05	F6			
GP04	B5			
GP03	B4			
GP02	D5			
GP01	E5			
GP00	A5			
HOST PORT INTERFACE (HPI)				
$\overline{\text{HINT}}$	L4	I/O/Z		Host interrupt from DSP to host (O/Z)
HCNTL1	M5	I/O/Z		Host control -selects between control, address, or data registers (I) [default]
HCNTL0	L6	I/O/Z		Host control -selects between control, address, or data registers (I) [default]
HHWIL	L3	I/O/Z		Host half-word select — first or second half-word (not necessarily high or low order). For HPI16 bus width selection only] (I) [default]
HR/$\overline{\text{W}}$	K5	I/O/Z		Host read or write select (I) [default]
$\overline{\text{HAS}}$	M4	I/O/Z		Host address strobe (I) [default]
$\overline{\text{HCS}}$	M3	I/O/Z		Host chip select (I) [default]
$\overline{\text{HDS1}}$	L2	I/O/Z		Host data strobe 1 (I) [default]
$\overline{\text{HDS2}}$	L5	I/O/Z		Host data strobe 2 (I) [default]
$\overline{\text{HRDY}}$	M6	I/O/Z		Host ready from DSP to host (O/Z) [default]

PRODUCT PREVIEW

Table 2-6 Terminal Functions (Part 4 of 22)

Signal Name	Ball No.	Type	IPD/IPU	Description
HD31	P3	I/O/Z		Host-port data [31:16] pin (I/O/Z) [default]
HD30	N6			
HD29	T5			
HD28	P6			
HD27	U5			
HD26	N1			
HD25	V2			
HD24	M1			
HD23	U6			
HD22	V1			
HD21	U1			
HD20	N2			
HD19	T1			
HD18	P2			
HD17	R1			
HD16	N3	I/O/Z		Host-port data [15:0] pin (I/O/Z) [default]
HD15	T2			
HD14	P4			
HD13	U2			
HD12	N4			
HD11	W1			
HD10	R5			
HD09	T3			
HD08	N5			
HD07	R4			
HD06	T6			
HD05	U4			
HD04	R6			
HD03	T4			
HD02	P5			
HD01	K6			
HD00	W2			

PRODUCT PREVIEW

2009 Texas Instruments Incorporated

Table 2-6 Terminal Functions (Part 5 of 22)

Signal Name	Ball No.	Type	IPD/IPU	Description
EMIFA (64-BIT) — CONTROL SIGNALS COMMON TO ALL TYPES OF MEMORY				
ABA1	V24	O/Z	IPD	EMIFA bank address control (ABA[1:0]). Active-low bank selects for the 64-bit EMIFA. • When interfacing to 16-bit Asynchronous devices, ABA1 carries bit 1 of the byte address. • For an 8-bit Asynchronous interface, ABA[1:0] are used to carry bits 1 and 0 of the byte address.
ABA0	V25	O/Z	IPD	
$\overline{\text{ACE5}}$	V26	O/Z	IPU	EMIFA memory space enables. • Enabled by bits 28 through 31 of the word address • Only one pin is asserted during any external data access **NOTE:** The C6457 device does not have ACE0 and ACE1 pins.
$\overline{\text{ACE4}}$	U27			
$\overline{\text{ACE3}}$	W25			
$\overline{\text{ACE2}}$	W26			
$\overline{\text{ABE07}}$	W28	O/Z	IPU	EMIFA byte-enable control. • Decoded from the low-order address bits. The number of address bits or byte enables used depends on the width of external memory. • Byte-write enables for most types of memory.
$\overline{\text{ABE06}}$	L25			
$\overline{\text{ABE05}}$	L28			
$\overline{\text{ABE04}}$	L27			
$\overline{\text{ABE03}}$	Y28			
$\overline{\text{ABE02}}$	W27			
$\overline{\text{ABE01}}$	Y24			
$\overline{\text{ABE00}}$	Y25			
EMIFA (64-BIT) — BUS ARBITRATION				
$\overline{\text{AHOLDA}}$	N25	O	IPU	EMIFA hold-request-acknowledge to the host
$\overline{\text{AHOLD}}$	R28	I	IPU	EMIFA hold request from the host
ABUSREQ	L26	O	IPU	EMIFA bus request output
EMIFA (64-BIT) — ASYNCHRONOUS/SYNCHRONOUS MEMORY CONTROL				
AECLKIN	N28	I	IPD	EMIFA external input clock. The EMIFA input clock (AECLKIN or SYSCLK7 clock) is selected at reset via the pullup/pulldown resistor on the GPIO[15] pin. **NOTE:** AECLKIN is the default for the EMIFA input clock.
AECLKOUT	V28	O/Z	IPD	EMIFA output clock [at EMIFA input clock (AECLKIN or SYSCLK7) frequency]
$\overline{\text{AAWE}}$/$\overline{\text{ASWE}}$	AA24	O/Z	IPU	Asynchronous memory write-enable/Programmable synchronous interface write-enable
AARDY	K28	I	IPU	Asynchronous memory ready input
AR/$\overline{\text{W}}$	W24	O/Z	IPU	Asynchronous memory read/write
$\overline{\text{AAOE}}$/$\overline{\text{ASOE}}$	AE25	O/Z	IPU	Asynchronous/Programmable synchronous memory output-enable
$\overline{\text{ASADS}}$/$\overline{\text{ASRE}}$	R25	O/Z	IPU	Programmable synchronous address strobe or read-enable • For programmable synchronous interface, the R_ENABLE field in the Chip Select x Configuration Register selects between ASADS and ASRE: – If R_ENABLE = 0, then the ASADS/ASRE signal functions as the ASADS signal. – If R_ENABLE = 1, then the ASADS/ASRE signal functions as the ASRE signal.

PRODUCT PREVIEW

Table 2-6 Terminal Functions (Part 6 of 22)

Signal Name	Ball No.	Type	IPD/IPU	Description
EMIFA (64-BIT) — ADDRESS				
AEA19	P24	O/Z	IPD	EMIFA external address (word address) (**O/Z**)
AEA18	M25			
AEA17	M24			
AEA16	P25			
AEA15	P26			
AEA14	T24			
AEA13	R26	O/Z	IPU	
AEA12	N27	O/Z	IPD	
AEA11	T25			
AEA10	N24	O/Z	IPD	
AEA09	M26			
AEA08	R24			
AEA07	N26			
AEA06	T28			
AEA05	U28			
AEA04	R27			
AEA03	T27			
AEA02	T26			
AEA01	U26			
AEA00	U25			

PRODUCT PREVIEW

2009 Texas Instruments Incorporated

Table 2-6 Terminal Functions (Part 7 of 22)

Signal Name	Ball No.	Type	IPD/IPU	Description
EMIFA (64-BIT) — DATA				
AED63	G24	I/O/Z	IPU	EMIFA external data
AED62	A26			
AED61	C26			
AED60	C27			
AED59	E26			
AED58	D27			
AED57	D25			
AED56	F26			
AED55	H24			
AED54	H25			
AED53	D26			
AED52	F27			
AED51	B27			
AED50	G26			
AED49	B26			
AED48	G27			
AED47	J24			
AED46	K25			
AED45	J25			
AED44	J26			
AED43	H26			
AED42	J27			
AED41	C28			
AED40	J28			
AED39	D28			
AED38	K24			
AED37	F28			
AED36	G25			
AED35	G28			
AED34	K27			
AED33	L24			
AED32	K26			
AED31	Y26			
AED30	AF28			
AED29	AA28			
AED28	AB26			
AED27	Y27			
AED26	AB25			

PRODUCT PREVIEW

PRODUCT PREVIEW

Table 2-6 Terminal Functions (Part 8 of 22)

Signal Name	Ball No.	Type	IPD/IPU	Description
AED25	AA26	I/O/Z	IPU	EMIFA external data
AED24	AB24			
AED23	AA25			
AED22	AA27			
AED21	AC28			
AED20	AG27			
AED19	AE28			
AED18	AF27			
AED17	AD28			
AED16	AF26			
AED15	AE27			
AED14	AG25			
AED13	AC27			
AED12	AD26			
AED11	AC25			
AED10	AE26			
AED09	AF25			
AED08	AC26			
AED07	AD25			
AED06	AH26			
AED05	AH25			
AED04	AD27			
AED03	AF24			
AED02	AG26			
AED01	AE24			
AED00	AC24			

2009 Texas Instruments Incorporated

Table 2-6 Terminal Functions (Part 9 of 22)

Signal Name	Ball No.	Type	IPD/IPU	Description
DDR2 MEMORY CONTROLLER				
DDRDQM0	C10	O/Z		DDR2 EMIF Data Masks
DDRDQM1	C7			
DDRDQM2	C19			
DDRDQM3	C22			
DDRBA0	C14	O/Z		DDR Bank Address
DDRBA1	D14			
DDRBA2	E14			
DDRA00	F17	O/Z		DDR2 EMIF Address Bus
DDRA01	E17			
DDRA02	D17			
DDRA03	C17			
DDRA04	E16			
DDRA05	D16			
DDRA06	C16			
DDRA07	B16			
DDRA08	D15			
DDRA09	C15			
DDRA10	B15			
DDRA11	A15			
DDRA12	A14			
DDRA13	B14			
DDRCLKOUTP0	A13	O/Z		DDR2 EMIF Output Clocks to drive SDRAMs (one clock pair per SDRAM)
DDRCLKOUTN0	B13			
DDRCLKOUTP1	A17			
DDRCLKOUTN1	B17			

PRODUCT PREVIEW

PRODUCT PREVIEW

Table 2-6 Terminal Functions (Part 10 of 22)

Signal Name	Ball No.	Type	IPD/IPU	Description
DDRD00	A12	O/Z		DDR2 EMIF Data Bus
DDRD01	B12			
DDRD02	C11			
DDRD03	D11			
DDRD04	A10			
DDRD05	B10			
DDRD06	C9			
DDRD07	D9			
DDRD08	C8			
DDRD09	D8			
DDRD10	E8			
DDRD11	F8			
DDRD12	B7			
DDRD13	A7			
DDRD14	B6			
DDRD15	A6			
DDRD16	B18			
DDRD17	A18			
DDRD18	C18			
DDRD19	D18			
DDRD20	A20			
DDRD21	B20			
DDRD22	C20			
DDRD23	D20			
DDRD24	A21			
DDRD25	B21			
DDRD26	C21			
DDRD27	D21			
DDRD28	A23			
DDRD29	B23			
DDRD30	A24			
DDRD31	B24			
$\overline{\text{DDRCAS}}$	E12	O/Z		DDR2 EMIF Column Address Strobe
$\overline{\text{DDRRAS}}$	D12	O/Z		DDR2 EMIF Row Address Strobe
$\overline{\text{DDRCE}}$	E13	O/Z		DDR2 EMIF Chip Enable
$\overline{\text{DDRWE}}$	C12	O/Z		DDR2 EMIF Write Enable
DDRCKE	D13	O/Z		DDR2 EMIF Clock Enable

2009 Texas Instruments Incorporated

Table 2-6 Terminal Functions (Part 11 of 22)

Signal Name	Ball No.	Type	IPD/IPU	Description
DDRDQS0P	E10	I/O/Z		DDR2 EMIF Data Strobe
DDRDQS0N	D10			
DDRDQS1P	E7			
DDRDQS1N	D7			
DDRDQS2P	E19			
DDRDQS2N	D19			
DDRDQS3P	E22			
DDRDQS3N	D22			
DDRRCVENIN0	A9	I		DDR2 EMIF Data Strobe Gate Input/Outputs to help meet DDR Timing
DDRRCVENOUT0	B9	O/Z		
DDRRCVENIN1	E20	I		
DDRRCVENOUT1	F20	O/Z		
DDRODT	E15	O/Z		DDR2 EMIF On Die Termination Outputs used to set termination on the SDRAMs
DDRSLRATE	A27	I		DDR2 Slew rate control
$V_{REFSSTL}$	C13	A		Reference Voltage Input for SSTL18 buffers used by DDR2 EMIF (V_{DDS18_2})
TIMER 1				
TOUT1L	AF19	O/Z	IPD	Timer 1 output pin for lower 32-bit counter
TINP1L	AG19	I	IPD	Timer 1 input pin for lower 32-bit counter
TIMER 0				
TOUT0L	AG20	O/Z	IPD	Timer 0 output pin for lower 32-bit counter
TINP0L	AH20	I	IPD	Timer 0 input pin for lower 32-bit counter
INTER-INTEGRATED CIRCUIT (I^2C)				
SCL	F24	I/O/Z		I^2C clock. When the I^2C module is used, use an external pullup resistor.
SDA	E24	I/O/Z		I^2C data. When I^2C is used, ensure there is an external pullup resistor.
MULTICHANNEL BUFFERED SERIAL PORT (McBSP)				
CLKS0	AA4	I	IPD	McBSP0 Module Clock
CLKR0	Y5	I/O/Z	IPD	McBSP0 Receive Clock
CLKX0	AB3	I/O/Z	IPD	McBSP0 Transmit Clock
DR0	Y6	I	IPD	McBSP0 Receive Data
DX0	W6	O/Z	IPD	McBSP0 Transmit Data
FSR0	V4	I/O/Z	IPD	McBSP0 Receive Frame Sync
FSX0	W4	I/O/Z	IPD	McBSP0 Transmit Frame Sync
CLKS1	Y1	I	IPD	McBSP1 Module Clock
CLKR1	Y4	I/O/Z	IPD	McBSP1 Receive Clock
CLKX1	AA3	I/O/Z	IPD	McBSP1 Transmit Clock
DR1	W3	I	IPD	McBSP1 Receive Data
DX1	Y3	O/Z	IPD	McBSP1 Transmit Data
FSR1	V5	I/O/Z	IPD	McBSP1 Receive Frame Sync
FSX1	W5	I/O/Z	IPD	McBSP1 Transmit Frame Sync

PRODUCT PREVIEW

Table 2-6 Terminal Functions (Part 12 of 22)

Signal Name	Ball No.	Type	IPD/IPU	Description
UNIVERSAL TEST AND OPERATIONS PHY INTERFACE for ASYNCHRONOUS TRANSFER MODE (ATM) [UTOPIA SLAVE]				
UTOPIA SLAVE (ATM CONTROLLER) — TRANSMIT INTERFACE				
UXCLK	A4	I		Source clock for UTOPIA transmit driven by Master ATM Controller.
UXCLAV	C3	O/Z		Transmit cell available status output signal from UTOPIA Slave. • 0 indicates a complete cell is NOT available for transmit • 1 indicates a complete cell is available for transmit
$\overline{\text{UXENB}}$	B3	I		UTOPIA transmit interface enable input signal. Asserted by the Master ATM Controller to indicate that the UTOPIA Slave should put out on the Transmit Data Bus the first byte of valid data and the UXSOC signal in the next clock cycle.
UXSOC	G4	O/Z		Transmit Start-of-Cell signal. This signal is output by the UTOPIA Slave on the rising edge of the UXCLK, indicating that the first valid byte of the cell is available on the 8-bit Transmit Data Bus (UXDATA[7:0]).
UXADDR4	J4	I		UTOPIA transmit address pins (UXADDR[4:0]) (I) 5-bit Slave transmit address input pins driven by the Master ATM Controller to identify and select one of the Slave devices (up to 31 possible) in the ATM System.
UXADDR3	H5			
UXADDR2	K3			
UXADDR1	J5			
UXADDR0	H4			
UXDATA7	F3	O/Z		UTOPIA 8-bit transmit data bus (I/O/Z) Using the Transmit Data Bus, the UTOPIA Slave (on the rising edge of the UXCLK) transmits the 8-bit ATM cells to the Master ATM Controller.
UXDATA6	E4			
UXDATA5	C4			
UXDATA4	A3			
UXDATA3	H3			
UXDATA2	G3			
UXDATA1	F4			
UXDATA0	E3			
UTOPIA SLAVE (ATM CONTROLLER) — RECEIVE INTERFACE				
URCLK	C1	I		Source clock for UTOPIA receive driven by Master ATM Controller.
URCLAV	B2	O/Z		Receive cell available status output signal from UTOPIA Slave. • 0 indicates NO space is available to receive a cell from Master ATM Controller. • 1 indicates space is available to receive a cell from Master ATM Controller.
$\overline{\text{URENB}}$	K4	I		UTOPIA receive interface enable input signal. Asserted by the Master ATM Controller to indicate to the UTOPIA Slave to sample the Receive Data Bus (URDATA[7:0]) and URSOC signal in the next clock cycle or thereafter.
URSOC	G2	I		Receive Start-of-Cell signal. This signal is output by the Master ATM Controller to indicate to the UTOPIA Slave that the first valid byte of the cell is available to sample on the 8-bit Receive Data Bus (URDATA[7:0]).
URADDR4	K1	I		UTOPIA receive address pins [URADDR[4:0] (I)]: 5-bit Slave receive address input pins driven by the Master ATM Controller to identify and select one of the Slave devices (up to 31 possible) in the ATM System.
URADDR3	K2			
URADDR2	J1			
URADDR1	J3			
URADDR0	H2			

PRODUCT PREVIEW

2009 Texas Instruments Incorporated

Table 2-6 Terminal Functions (Part 13 of 22)

Signal Name	Ball No.	Type	IPD/IPU	Description
URDATA7	G1	I		UTOPIA 8-bit Receive Data Bus (I/O/Z). Using the Receive Data Bus, the UTOPIA Slave (on the rising edge of the URCLK) can receive the 8-bit ATM cell data from the Master ATM Controller.
URDATA6	F2			
URDATA5	F1			
URDATA4	E2			
URDATA3	E1			
URDATA2	D2			
URDATA1	D1			
URDATA0	C2			
SERIAL RAPIDIO (SRIO)				
RIORXN0	AG8	I		Serial RapidIO Receive Data (4 links)
RIORXP0	AG9			
RIORXN1	AF11			
RIORXP1	AF10			
RIORXN2	AH13			
RIORXP2	AH12			
RIORXN3	AE13			
RIORXP3	AE12			
RIOTXN0	AE9	O		Serial RapidIO Transmit data (4 links)
RIOTXP0	AE8			
RIOTXN1	AH9			
RIOTXP1	AH10			
RIOTXN2	AF13			
RIOTXP2	AF14			
RIOTXN3	AG13			
RIOTXP3	AG14			
ETHERNET MAC (EMAC) AND SGMII				
SGMIIRXN	AF16	I		Ethernet MAC SGMII Receive Data
SGMIIRXP	AF17			
SGMIITXN	AH15	O		Ethernet MAC SGMII Transmit Data
SGMIITXP	AH14			
MANAGEMENT DATA INPUT/OUTPUT (MDIO)				
MDIO	AH19	I/O/Z	IPU	MDIO Data
MDCLK	AH18	O	IPD	MDIO Clock
VOLTAGE CONTROL TERMINALS				
PTV18	A16	A		PTV Compensation NMOS Reference Input. Install with 47-Ω, 5% resistor to GND
SUPPLY VOLTAGE MONITOR TERMINALS				
CV_{DDMON}	U19	A		1.1-V CV_{DD} Supply Monitor
$DV_{DD33MON}$	U22	A		3.3-V DV_{DD} Supply Monitor
$DV_{DD18MON}$	G23	A		1.8-V DV_{DD} Supply Monitor

PRODUCT PREVIEW

Table 2-6 Terminal Functions (Part 14 of 22)

Signal Name	Ball No.	Type	IPD/IPU	Description
SUPPLY VOLTAGE TERMINALS				
V_{DDR18}	AE10 AE16	S		1.8-V I/O supply voltage (SRIO/SGMII SerDes regulator supply).
V_{DDA11}	AC10 AC12 AC14 AC16	S		SRIO/SGMII analog supply: 1.1-V I/O supply voltage Do not use core supply.
V_{DDD11}	U13 V12 V14 W11 W13 W15	S		SRIO/SGMII SerDes digital supply: 1.1-V I/O supply voltage Do not use core supply.
V_{DDT11}	AD9 AD11 AD13 AD15 AD17 AF9 AF15 AG11 AH17	S		SRIO/SGMII SerDes termination supply: 1.1-V I/O supply voltage Do not use core supply.
DV_{DD18}	AA6 AB18 AB20 AB7 AC19 AC21 AC3 AC8 AD18 AD22 AF18 AG5 AH1 B11 B19 B22 B8	S		1.8-V I/O supply voltage

PRODUCT PREVIEW

2009 Texas Instruments Incorporated

Table 2-6 Terminal Functions (Part 15 of 22)

Signal Name	Ball No.	Type	IPD/IPU	Description
DV_{DD18}	E11	S		1.8-V I/O supply voltage
	E21			
	E23			
	E9			
	F10			
	F12			
	F14			
	F16			
	F18			
	G11			
	G13			
	G15			
	G17			
	G19			
	G21			
	G7			
	G9			
	J7			
	V6			
	Y7			

PRODUCT PREVIEW

PRODUCT PREVIEW

Table 2-6 Terminal Functions (Part 16 of 22)

Signal Name	Ball No.	Type	IPD/IPU	Description
DV_{DD33}	A1	S		3.3-V I/O supply voltage
	A28			
	AA23			
	AB22			
	AB28			
	AC23			
	AD24			
	AH24			
	AH28			
	D3			
	E25			
	E27			
	H1			
	H22			
	H27			
	J23			
	K22			
	L1			
	L23			
	L7			
	M22			
	M27			
	N23			
	N7			
	P1			
	P22			
	P27			
	R23			
	R3			
	R7			
	T22			
	U7			
	V22			
	V3			
	W23			
	Y22			

2009 Texas Instruments Incorporated

Table 2-6 Terminal Functions (Part 17 of 22)

Signal Name	Ball No.	Type	IPD/IPU	Description
CV_{DD}	K10	S		1.1-V core supply voltage
	K12			
	K14			
	K16			
	K18			
	L11			
	L13			
	L15			
	L17			
	L19			
	M10			
	M12			
	M14			
	M16			
	M18			
	N11			
	N13			
	N15			
	N17			
CV_{DD}	N19	S		1.1-V core supply voltage
	P10			
	P12			
	P14			
	P16			
	P18			
	R11			
	R13			
	R15			
	R17			
	R19			
	T12			
	T14			
	T16			
	T18			
	U11			
	U15			
	U17			
	V10			
	V16			
	V18			
	W17			
	W19			
$PLLV_1$	AC5	S		1.8-V PLL Supply
$PLLV_2$	F7	S		1.8-V PLL Supply

PRODUCT PREVIEW

Table 2-6 Terminal Functions (Part 18 of 22)

Signal Name	Ball No.	Type	IPD/IPU	Description
				GROUND PINS
VSS	A11	GND		Ground pins
	A19			
	A2			
	A22			
	A8			
	AA2			
	AA22			
	AA7			
	AB10			
	AB11			
	AB12			
	AB13			
	AB14			
	AB15			
	AB16			
	AB17			
	AB19			
	AB21			
	AB23			
	AB27			
	AB6			
	AB8			
	AB9			
	AC11			
	AC13			
	AC15			
	AC17			
	AC18			
	AC20			
	AC22			
	AC9			
	AD10			
	AD12			
	AD14			
	AD16			
	AD19			
	AD2			

PRODUCT PREVIEW

2009 Texas Instruments Incorporated

Table 2-6 Terminal Functions (Part 19 of 22)

Signal Name	Ball No.	Type	IPD/IPU	Description
VSS	AD23	GND		Ground pins
	AD8			
	AE11			
	AE14			
	AE15			
	AE17			
	AE18			
	AF5			
	AF8			
	AG1			
	AG10			
	AG12			
	AG15			
	AG17			
	AG18			
	AG24			
	AG28			
	AH11			
	AH16			
	AH2			
	AH27			
	AH8			
	B1			
	B28			
	D4			
	E18			
	E28			
	F11			
	F13			
	F15			
	F19			
	F21			
	F22			
	F25			
	F9			
	G10			
	G12			
	G14			

PRODUCT PREVIEW

PRODUCT PREVIEW

Table 2-6 Terminal Functions (Part 20 of 22)

Signal Name	Ball No.	Type	IPD/IPU	Description
VSS	G16	GND		Ground pins
	G18			
	G20			
	G22			
	G8			
	H23			
	H28			
	H7			
	J2			
	J22			
	K11			
	K13			
	K15			
	K17			
	K19			
	K23			
	K7			
	L10			
	L12			
	L14			
	L16			
	L18			
	L22			
	M11			
	M13			
	M15			
	M17			
	M19			
	M2			
	M23			
	M28			
	M7			
	N10			
	N12			
	N14			
	N16			
	N18			
	N22			

2009 Texas Instruments Incorporated

Table 2-6 Terminal Functions (Part 21 of 22)

Signal Name	Ball No.	Type	IPD/IPU	Description
	P11			
	P13			
	P15			
	P17			
	P19			
	P23			
	P28			
	P7			
	R12			
	R14			
	R16			
	R18			
	R2			
	R22			
	T11			
	T13			
	T15			
	T17			
	T19			
	T23			
VSS	T7	GND		Ground pins
	U10			
	U12			
	U14			
	U16			
	U18			
	U23			
	U24			
	U3			
	V11			
	V13			
	V15			
	V17			
	V19			
	V23			
	V27			
	V7			
	W10			
	W12			
	W14			
	W16			

PRODUCT PREVIEW

Table 2-6 Terminal Functions (Part 22 of 22)

Signal Name	Ball No.	Type	IPD/IPU	Description
VSS	W18	GND		Ground pins
	W22			
	W7			
	Y23			
RESERVED PINS				
RSV01	AC4	I/O/Z	IPU	Reserved - Unconnected
RSV02	AB2	I/O/Z	IPU	Reserved - Unconnected
RSV03	AB4	I/O/Z	IPU	Reserved - Unconnected
RSV04	AD20	O/Z	IPD	Reserved - Unconnected
RSV05	AD21	O/Z	IPD	Reserved - Unconnected
RSV06	AE20	A		Reserved - Unconnected
RSV07	AE21	A		Reserved - Unconnected
RSV08	AE7	O		Reserved - Unconnected
RSV09	AF7	O		Reserved - Unconnected
RSV10	H6	O		Reserved - Unconnected
RSV11	J6	O		Reserved - Unconnected
RSV12	AB5	A		Reserved - Connect to GND
RSV13	AA5	A		Reserved - Unconnected
RSV14	AF20	I/O/Z	IPU	Reserved - Unconnected
RSV15	AF21	I/O/Z	IPU	Reserved - Unconnected
RSV16	AF12	A		Reserved - Unconnected
RSV17	AG16	A		Reserved - Unconnected
RSV18	AH21	A		Reserved - Unconnected
RSV19	AG21	A		Reserved - Unconnected
RSV20	AC6	A		Reserved - Unconnected
RSV21	AC7	A		Reserved - Unconnected
RSV22	AE23	I	IPU	Reserved - Pullup to DV_{DD18} with 10-kΩ resistor.
RSV23	R10	S		Reserved - Connected to CV_{DD}
RSV23	T10	S		Reserved - Connected to CV_{DD}
RSV24	AD6	O/Z	IPD	Reserved - Unconnected
RSV25	G5	O/Z	IPD	Reserved - Unconnected
RSV26	AE22			Reserved - Unconnected
RSV27	AF22			Reserved - Unconnected
RSV28	AG23			Reserved - Unconnected
RSV29	AH22			Reserved - Unconnected
End of Table 2-6				

PRODUCT PREVIEW

2009 Texas Instruments Incorporated

2.9 Development

2.9.1 Development Support

In case the customer would like to develop their own features and software on the C6457 device, TI offers an extensive line of development tools for the TMS320C6000™ DSP platform, including tools to evaluate the performance of the processors, generate code, develop algorithm implementations, and fully integrate and debug software and hardware modules. The tool's support documentation is electronically available within the Code Composer Studio™ Integrated Development Environment (IDE).

The following products support development of C6000™ DSP-based applications:

- **Software Development Tools:**
  - Code Composer Studio™ Integrated Development Environment (IDE), including Editor C/C++/Assembly Code Generation, and Debug plus additional development tools
  - Scalable, Real-Time Foundation Software (DSP/BIOS™), which provides the basic run-time target software needed to support any DSP application.
- **Hardware Development Tools:**
  - Extended Development System (XDS™) Emulator (supports C6000™ DSP multiprocessor system debug)
  - EVM (Evaluation Module)

2.9.2 Device Support

2.9.2.1 Device and Development-Support Tool Nomenclature

To designate the stages in the product development cycle, TI assigns prefixes to the part numbers of all DSP devices and support tools. Each DSP commercial family member has one of three prefixes: TMX, TMP, or TMS (e.g., TMX320C6457CMH). Texas Instruments recommends two of three possible prefix designators for its support tools: TMDX and TMDS. These prefixes represent evolutionary stages of product development from engineering prototypes (TMX/TMDX) through fully qualified production devices/tools (TMS/TMDS).

Device development evolutionary flow:

- **TMX:** Experimental device that is not necessarily representative of the final device's electrical specifications
- **TMP:** Final silicon die that conforms to the device's electrical specifications but has not completed quality and reliability verification
- **TMS:** Fully qualified production device

Support tool development evolutionary flow:

- **TMDX:** Development-support product that has not yet completed Texas Instruments internal qualification testing.
- **TMDS:** Fully qualified development-support product

TMX and TMP devices and TMDX development-support tools are shipped with the following disclaimer:

"Developmental product is intended for internal evaluation purposes."

TMS devices and TMDS development-support tools have been characterized fully, and the quality and reliability of the device have been demonstrated fully. TI's standard warranty applies.

Predictions show that prototype devices (TMX or TMP) have a greater failure rate than the standard production devices. Texas Instruments recommends that these devices not be used in any production system because their expected end-use failure rate still is undefined. Only qualified production devices are to be used.

TI device nomenclature also includes a suffix with the device family name. This suffix indicates the package type (for example, CMH), the temperature range (for example, blank is the default case temperature range), and the device speed range, in megahertz (for example, blank is 1000 MHz [1 GHz]).

PRODUCT PREVIEW

provides a legend for reading the complete device name for any TMS320C64x+™ DSP generation member.

For device part numbers and further ordering information for TMS320C6457 in the CMH package type, see the TI website www.ti.com or contact your TI sales representative.

Figure 2-12 TMS320C64x+™ DSP Device Nomenclature (including the TMS320C6457 DSP)

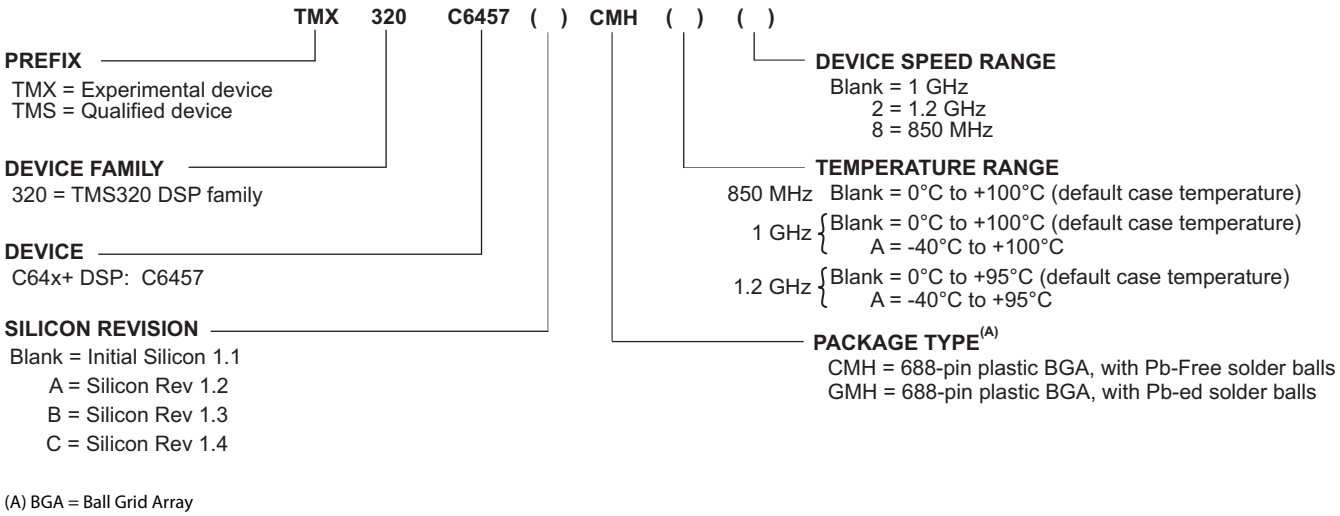

(A) BGA = Ball Grid Array

2.9.2.2 Documentation Support

The documents shown in Table 2-7 describe the TMS320C6457 Communications Infrastructure Digital Signal Processor. Copies of these documents are available on the Internet at www.ti.com. Tip: Enter the literature number in the search box provided at www.ti.com.

The current documentation that describes the TMS320C6457, related peripherals, and other technical collateral, is available in the C6000 DSP product folder at: www.ti.com/c6000.

Table 2-7 Relevant Documents (Part 1 of 2)

TI Literature No.	Description
SPRU732	*TMS320C64x/C64x+ DSP CPU and Instruction Set Reference Guide*. Describes the CPU architecture, pipeline, instruction set, and interrupts for the TMS320C64x and TMS320C64x+ digital signal processors (DSPs) of the TMS320C6000 DSP family. The C64x/C64x+ DSP generation comprises fixed-point devices in the C6000 DSP platform. The C64x+ DSP is an enhancement of the C64x DSP with added functionality and an expanded instruction set.
SPRU871	*TMS320C64x+ Megamodule Reference Guide*. Describes the TMS320C64x+ digital signal processor (DSP) megamodule. Included is a discussion on the internal direct memory access (IDMA) controller, the interrupt controller, the power-down controller, memory protection, bandwidth management, and the memory and cache.
SPRAA84	*TMS320C64x to TMS320C64x+ CPU Migration Guide*. Describes migrating from the Texas Instruments TMS320C64x digital signal processor (DSP) to the TMS320C64x+ DSP. The objective of this document is to indicate differences between the two cores. Functionality in the devices that is identical is not included.
SPRU889	*High-Speed DSP Systems Design Reference Guide*. Provides recommendations for meeting the many challenges of high-speed DSP system design. These recommendations include information about DSP audio, video, and communications systems for the C5000 and C6000 DSP platforms.
SPRUGK5	*TMS320C6457 DSP DDR2 Memory Controller User's Guide*. This document describes the DDR2 memory controller in the TMS320C6457 digital-signal processors (DSPs).
SPRUGK6	*TMS320C6457 DSP Enhanced DMA (EDMA3) Controller User's Guide*. This document describes the Enhanced DMA (EDMA3) Controller on the TMS320C6457 device.
SPRUGK2	*TMS320C6457 DSP External Memory Interface (EMIF) User's Guide*. This document describes the operation of the external memory interface (EMIF) in the digital signal processors (DSPs) of the TMS320C6457 DSP family.

PRODUCT PREVIEW

2009 Texas Instruments Incorporated

Table 2-7 Relevant Documents (Part 2 of 2)

TI Literature No.	Description
SPRUGL2	*TMS320C6457 DSP General-Purpose Input/Output (GPIO) User's Guide*. This document describes the general-purpose input/output (GPIO) peripheral in the digital signal processors (DSPs) of the TMS320C6457 DSP family. The GPIO peripheral provides dedicated general-purpose pins that can be configured as either inputs or outputs. When configured as an input, you can detect the state of the input by reading the state of an internal register. When configured as an output, you can write to an internal register to control the state driven on the output pin.
SPRUGK7	*TMS320C6457 DSP Host Port Interface (HPI) User's Guide*. This guide describes the host port interface (HPI) on the TMS320C6457 digital signal processors (DSPs). The HPI enables an external host processor (host) to directly access DSP resources (including internal and external memory) using a 16-bit (HPI16) or 32-bit (HPI32) interface.
SPRUGK3	*TMS320C6457 DSP Inter-Integrated Circuit (I^2C) Module User's Guide*. This document describes the inter-integrated circuit (I^2C) module in the TMS320C6457 Digital Signal Processor (DSP). The I^2C provides an interface between the TMS320C6457 device and other devices compliant with Philips Semiconductors Inter-IC bus (I^2C-bus) specification version 2.1 and connected by way of an I^2C-bus. This document assumes the reader is familiar with the I^2C-bus specification.
SPRUGK4	*TMS320C6457 Serial RapidIO (SRIO) User's Guide*. This document describes the Serial RapidIO (SRIO) on the TMS320C6457 devices.
SPRUGL3	*TMS320C6457 DSP Software-Programmable Phase-Locked Loop (PLL) Controller UG*. This document describes the operation of the software-programmable phase-locked loop (PLL) controller in the TMS320C6457 digital signal processors (DSPs). The PLL controller offers flexibility and convenience by way of software-configurable multipliers and dividers to modify the input signal internally. The resulting clock outputs are passed to the TMS320C6457 DSP core, peripherals, and other modules inside the TMS320C6457 DSP.
SPRUGL0	*TMS320C6457 DSP 64-Bit Timer User's Guide*. This document provides an overview of the 64-bit timer in the TMS320C6457 DSP. The timer can be configured as a general-purpose 64-bit timer, dual general-purpose 32-bit timers, or a watchdog timer. When configured as a dual 32-bit timers, each half can operate in conjunction (chain mode) or independently (unchained mode) of each other.
SPRUGK1	*TMS320C6457 DSP Turbo-Decoder Coprocessor 2 (TCP2) Reference Guide*. Channel decoding of high bit-rate data channels found in third generation (3G) cellular standards requires decoding of turbo-encoded data. The turbo-decoder coprocessor (TCP) in some of the digital signal processor (DSPs) of the TMS320C6000™ DSP family has been designed to perform this operation for IS2000 and 3GPP wireless standards. This document describes the operation and programming of the TCP.
SPRUGL1	*TMS320C6457 DSP Universal Test & Operations PHY Interface for ATM 2 (UTOPIA2) User's Guide*. This document describes the universal test and operations PHY interface for asynchronous transfer mode (ATM) 2 (UTOPIA2) in the TMS320C6457 digital signal processors (DSPs) of the TMS320C6000™ DSP family.
SPRUGK0	*TMS320C6457 DSP Viterbi-Decoder Coprocessor 2 (VCP2) Reference Guide.* Channel decoding of voice and low bit-rate data channels found in third generation (3G) cellular standards requires decoding of convolutional encoded data. The Viterbi-decoder coprocessor 2 (VCP2) provided in TMS320C6457 devices has been designed to perform Viterbi-Decoding for IS2000 and 3GPP wireless standards. The VCP2 coprocessor has been designed to perform forward error correction for 2G and 3G wireless systems. The VCP2 coprocessor offers a very cost effective and synergistic solution when combined with Texas Instruments (TI) DSPs. The VCP2 can support 1941 12.2 Kbps class A 3G voice channels running at 333 MHz. This document describes the operation and programming of the VCP2.
SPRUGK9	*TMS320C6457 DSP Ethernet Media Access Controller (EMAC) / Management Data Input Output (MDIO) User's Guide*. This document provides a functional description of the Ethernet Media Access Controller (EMAC) and Physical layer (PHY) device Management Data Input/Output (MDIO) module integrated with TMS320C6457 devices. Included are the features of the EMAC and MDIO modules, a discussion of their architecture and operation, how these modules connect to the outside world, and the registers description for each module.
SPRUGK8	*TMS320C6457 DSP Multichannel Buffered Serial Port (McBSP) Reference Guide.* This document describes the operation of the multichannel buffered serial port (McBSP) in the digital signal processors (DSPs) of the TMS320C6000™ DSP family.
SPRUGL4	*TMS320C6457 DSP Power/Sleep Controller (PSC) User's Guide.* This document covers the usage of the Power/Sleep Controller (PSC) in the TMS320C6457 device.
SPRUGL5	*TMS320C6457 DSP Bootloader User's Guide.* This document describes the features of the on-chip bootloader provided with the TMS320C6457 Digital Signal Processor (DSP).
End of Table 2-7	

PRODUCT PREVIEW

PRODUCT PREVIEW

2009 Texas Instruments Incorporated

3 Device Configuration

On the TMS320C6457 device, certain device configurations like boot mode and endianess, are selected at device power-on reset. The status of the peripherals (enabled/disabled) is determined after device power-on reset. By default, the peripherals on the C6457 device are disabled and need to be enabled by software before being used.

3.1 Device Configuration at Device Reset

Table 3-1 describes the C6457 device configuration pins. The logic level is latched at power-on reset to determine the device configuration. The logic level on the device configuration pins can be set by using external pullup/pulldown resistors or by using some control device (e.g., FPGA/CPLD) to intelligently drive these pins. When using a control device, care should be taken to ensure there is no contention on the lines when the device is out of reset. The device configuration pins are sampled during power-on reset and are driven after the reset is removed. To avoid contention, the control device must stop driving the device configuration pins of the DSP.

Note—If a configuration pin must be routed out from the device and it is not driven (Hi-Z state), the internal pullup/pulldown (IPU/IPD) resistor should not be relied upon. TI recommends the use of an external pullup/pulldown resistor. For more detailed information on pullup/pulldown resistors and situations in which external pullup/pulldown resistors are required, see Section 3.6 "Pullup/Pulldown Resistors" on page 63.

Table 3-1 TMS320C6457 Device Configuration Pins

Configuration Pin	No.	IPD/IPU (1)	Functional Description
GPIO[0]	A5	IPU	Device Endian mode (LENDIAN) 0 = Device operates in Big Endian mode. 1 = Device operates in Little Endian mode (default).
GPIO[4:1]	[B5, B4, D5, E5]	IPD	Boot Mode Selection (BOOTMODE [3:0]) These pins select the boot mode for the device. For more information on the boot modes, see Section 2.4 "Boot Sequence" on page 21.
GPIO[8:5]	[B25, F5, C5, F6]	IPD	Device Number (DEVNUM[3:0])
GPIO[13:9]	[C23, D24, C25, A25, C24]	IPD	Configuration General-Purpose Inputs (CFGGP[4:0]) The value of these pins is latched to the Device Status Register following power-on reset and is used by the software.
GPIO[14]	D23	IPD	HPI peripheral bus width select (HPIWIDTH) 0 = HPI operates in HPI16 mode (default). HPI bus is 16 bits wide; HD[15:0] pins are used and the remaining HD[31:16] pins are reserved pins in the Hi-Z state. 1 = HPI operates in HPI32 mode. HPI bus is 32 bits wide; HD[31:0] pins are used.
GPIO[15]	F23	IPD	EMIFA input clock source select (ECLKINSEL). 0 = ECLKIN (default mode) 1 = SYSCLK7 (CPU/x) Clock Rate. The SYSCLK7 clock rate is software selectable via the Software PLL1 Controller. By default, SYSCLK7 is selected as CPU ÷ 10 clock rate.
CORECLKSEL	AE6		Core Clock Select 0 = CORECLK(N|P) is the input to main PLL. 1 = ALTCORECLK is used as the input to main PLL.
DDRCLKSEL	G6		DDR Clock Select 0 = DDRREFCLK(N|P) is the input to DDR PLL. 1 = ALTDDRCLK is used as the input to DDR PLL.
End of Table 3-1			

1 Internal 100-µA pulldown or pullup is provided for this terminal. In most systems, a 1-kΩ resistor can be used to oppose the IPD/IPU. For more detailed information on pulldown/pullup resistors and situations in which external pulldown/pullup resistors are required, see Section 3.6 "Pullup/Pulldown Resistors" on page 63.

PRODUCT PREVIEW

3.2 Peripheral Selection After Device Reset

Several of the peripherals on the TMS320C6457 are controlled by the Power Sleep Controller (PSC). By default, the SRIO, TCP2_A, TCP2_B, and VCP are held in reset and clock-gated. The memories in these modules are also in a low-leakage sleep mode. Software is required to turn these memories on. Then, the software enables the modules (turns on clocks and de-asserts reset) before these modules can be used.

In addition, the EMIFA, HPI, and UTOPIA come up clock-gated and held in reset. Memories in these modules are already enabled. Software is required to enable these modules before they are used as well.

If one of the above modules is used in the selected ROM boot mode, the ROM code will automatically enable the module.

All other modules come up enabled by default and there is no special software sequence to enable. For more detailed information on the PSC usage, see the *TMS320C6457 DSP Power/Sleep Controller PSC User's Guide* (literature number SPRUGL4).

PRODUCT PREVIEW

3.3 Device State Control Registers

The C6457 device has a set of registers that are used to control the status of its peripherals. These registers are shown in Table 3-2 and described in the next sections.

Table 3-2 Device State Control Registers (1)

Hex Address Range	Acronym	Description
0288 0818	JTAGID	Parameters for DSP device ID. Also referred to as JTAG or BSDL ID. These are readable by the configuration bus and can be accessed via the JTAG and the CPU.
0288 081C	-	Reserved
0288 0820	DEVSTAT	Stores parameters latched from configuration pins
0288 0824 - 0288 0837	-	Reserved
0288 0838	KICK0	Two successive key writes are required to get write access to any of the device state control registers. KICK0 is the first key register. The written data must be 0x83E70B13 to unlock it and it must be written before the KICK1 register. Writing any other value will lock the device state control registers.
0288 083C	KICK1	KICK1 is the second key register to be unlocked in order to get write access to any of the device state control registers. The written data must be 0x95A4F1E0 to unlock it and it must be written after the KICK0 register. Writing any other value will lock the device state control registers.
0288 0840	DSP_BOOT_ADDR	DSP boot address
0288 0844 - 0288 090F	-	Reserved
0288 0910	DEVCFG	Parameters set through software for device configuration
0288 0914	MACID1	EFUSE derived MAC address for C6457
0288 0918	MACID2	EFUSE derived MAC address for C6457
0288 0922 - 0288 091B	-	Reserved
0288 091C	PRI_ALLOC	Sets priority for Master peripherals
0288 0920	WDRSTSEL	Reset select for Watchdog (Timer1)
End of Table 3-2		

1 Writes are conditional based on valid keys written to both the KICK0 and KICK1 registers.

2009 Texas Instruments Incorporated

3.4 Device Status Register Description

The device status register depicts the device configuration selected upon power-on reset. Once set, these bits will remain set until a power-on reset. For the actual register bit names and their associated bit field descriptions, see Table 3-4 and Table 3-5.

Table 3-3 shows the parameters that are set through software to configure different components on the device. The configuration is done through the device configuration DEVCFG register, which is one-time writeable through software. The register is reset on all hard resets and is locked after the first write.

Table 3-3 Device Configuration Register Fields

Field	Reset	Description	Settings
Device Configuration 1 Register Fields			
CLKS0	0b	McBSP0 CLKS Select	0 = CLKS0 device pin 1 = chip_clks from Main.PLL
CLKS1	0b	McBSP1 CLKS Select	0 = CLKS1 device pin 1 = chip_clks from Main.PLL
SYSCLKOUTEN	1b	SYSCLKOUT Enable	0 = No clock output 1 = Clock output enabled
End of Table 3-3			

Table 3-4 Device Configuration Status Register (DEVSTAT)

HEX ADDRESS - 0288 0820h																
Bit	31	30	29	28	27	26	25	24	23	22	21	20	19	18	17	16
Acronym	Reserved															
Reset (1)	R-0															
Bit	15	14	13	12	11	10	9	8	7	6	5	4	3	2	1	0
Acronym	ECLKINSEL	HPIWIDTH	CFGGP					DEVNUM				BOOTMODE				LENDIAN
Reset (1)	0	0	R-n					R				R				R-1

1 R/W = Read/Write; R = Read only; -*n* = value after reset

Table 3-5 Device Configuration Status Register Field Descriptions (Part 1 of 2)

Bit	Acronym	Description
31:16	Reserved	Reserved. Read only, writes have no effect.
15	ECLKINSEL	EMIFA input clock select — shows the status of what clock mode is enabled or disabled for EMIFA. 0 = ECLKIN (default mode) 1 = SYSCLK7 (CPU ÷ x) Clock Rate. The SYSCLK7 clock rate is software selectable via the PLL1 Controller. By default, SYSCLK7 is selected as CPU ÷ 10 clock rate.
14	HPIWIDTH	HPI bus width control bit — shows the status of whether the HPI bus operates in 32-bit mode or in 16-bit mode. 0 = HPI operates in 16-bit mode. (default) 1 = HPI operates in 32-bit mode
13:9	CFGGP[4:0]	Used as general-purpose inputs for configuration purposes. These pins are latched at power-on reset. These values can be used by software routines for boot operations.
8:5	DEVNUM[3:0]	Device number.

PRODUCT PREVIEW

Table 3-5 Device Configuration Status Register Field Descriptions (Part 2 of 2)

Bit	Acronym	Description
4:1	BOOTMODE[3:0]	Determines the boot method for the device. For more information on bootmode, see Section 2.4 "Boot Sequence" on page 21. 0000 = No Boot 0001 = I^2C Master Boot (Slave Address 0x50) 0010 = I^2C Master Boot (Slave Address 0x51) 0011 = I^2C Slave Boot 0100 = HPI Boot 0101 = EMIFA Boot 0110 = EMAC Master Boot 0111 = EMAC Slave Boot 1000 = EMAC Forced Mode Boot 1001 = Reserved 1010 = RapidIO Boot (Configuration 0) 1011 = RapidIO Boot (Configuration 1) 1100 = RapidIO Boot (Configuration 2) 1101 = RapidIO Boot (Configuration 3) 111x = Reserved
0	LENDIAN	Device Endian mode (LENDIAN) — Shows the status of whether the system is operating in Big Endian mode or Little Endian mode (default). 0 = System is operating in Big Endian mode 1 = System is operating in Little Endian mode (default)
End of Table 3-5		

3.5 JTAG ID (JTAGID) Register Description

The JTAG ID register is a read-only register that identifies to the customer the JTAG/Device ID. For the C6457 device, the JTAG ID register resides at address location 0x0288 0818. For the actual register bit names and their associated bit field descriptions, see Table 3-6 and Table 3-7.

Table 3-6 JTAG ID (JTAGID) Register

HEX ADDRESS - 0288 0818h																
Bit	31	30	29	28	27	26	25	24	23	22	21	20	19	18	17	16
Acronym	VARIANT				PART NUMBER (16-bit)											
Reset (1)	R-0000				R-0000 0000 1001 0110b											
Bit	15	14	13	12	11	10	9	8	7	6	5	4	3	2	1	0
Acronym	PART NUMBER (Continued)				MANUFACTURER											LSB
Reset (1)					0000 0010 111b											R-1

1 R/W = Read/Write; R = Read only; *-n* = value after reset

Table 3-7 JTAG ID (JTAGID) Register Field Descriptions

Bit	Acronym	Value	Description
31:28	VARIANT	0000	Variant (4-Bit) value. The value of this field depends on the silicon revision being used.
27:12	PART NUMBER	0000 0000 1001 0110b	Part Number for boundary scan
11:1	MANUFACTURER	0000 0010 111b	Manufacturer
0	LSB	1b	This bit is read as a 1 for TMS320C6457
End of Table 3-7			

PRODUCT PREVIEW

2009 Texas Instruments Incorporated

3.6 Pullup/Pulldown Resistors

Proper board design should ensure that input pins to the C6457 device always be at a valid logic level and not floating. This may be achieved via pullup/pulldown resistors. The C6457 device features internal pullup (IPU) and internal pulldown (IPD) resistors on most pins to eliminate the need, unless otherwise noted, for external pullup/pulldown resistors.

An external pullup/pulldown resistor needs to be used in the following situations:

- **Device Configuration Pins:** If the pin is both routed out and are not driven (in Hi-Z state), an external pullup/pulldown resistor must be used, even if the IPU/IPD matches the desired value/state.
- **Other Input Pins:** If the IPU/IPD does not match the desired value/state, use an external pullup/pulldown resistor to pull the signal to the opposite rail.

For the device configuration pins (listed in Table 3-1), if they are both routed out and are not driven (in Hi-Z state), it is strongly recommended that an external pullup/pulldown resistor be implemented. Although, internal pullup/pulldown resistors exist on these pins and they may match the desired configuration value, providing external connectivity can help ensure that valid logic levels are latched on these device configuration pins. In addition, applying external pullup/pulldown resistors on the device configuration pins adds convenience to the user in debugging and flexibility in switching operating modes.

Tips for choosing an external pullup/pulldown resistor:

- Consider the total amount of current that may pass through the pullup or pulldown resistor. Make sure to include the leakage currents of all the devices connected to the net, as well as any internal pullup or pulldown resistors.
- Decide a target value for the net. For a pulldown resistor, this should be below the lowest V_{IL} level of all inputs connected to the net. For a pullup resistor, this should be above the highest V_{IH} level of all inputs on the net. A reasonable choice would be to target the V_{OL} or V_{OH} levels for the logic family of the limiting device; which, by definition, have margin to the V_{IL} and V_{IH} levels.
- Select a pullup/pulldown resistor with the largest possible value that can still ensure that the net will reach the target pulled value when maximum current from all devices on the net is flowing through the resistor. The current to be considered includes leakage current plus, any other internal and external pullup/pulldown resistors on the net.
- For bidirectional nets, there is an additional consideration that sets a lower limit on the resistance value of the external resistor. Verify that the resistance is small enough that the weakest output buffer can drive the net to the opposite logic level (including margin).
- Remember to include tolerances when selecting the resistor value.
- For pullup resistors, also remember to include tolerances on the DV_{DD} rail.

For most systems:

- A 1-kΩ resistor can be used to oppose the IPU/IPD while meeting the above criteria. Users should confirm this resistor value is correct for their specific application.
- A 20-kΩ resistor can be used to compliment the IPU/IPD on the device configuration pins while meeting the above criteria. Users should confirm this resistor value is correct for their specific application.

For more detailed information on input current (I_I), and the low-level/high-level input voltages (V_{IL} and V_{IH}) for the TMS320C6457 device, see Section 6.3 "Electrical Characteristics" on page 89.

To determine which pins on the C6457 device include internal pullup/pulldown resistors, see Table 2-6 "Terminal Functions" on page 33.

PRODUCT PREVIEW

PRODUCT PREVIEW

2009 Texas Instruments Incorporated

4 System Interconnect

On the TMS320C6457 device, the C64x+ Megamodule, the EDMA3 transfer controllers, and the system peripherals are interconnected through two switch fabrics. The switch fabrics allow for low-latency, concurrent data transfers between master peripherals and slave peripherals; for example, through a switch fabric the CPU can send data to the Viterbi co-processor (VCP2) without affecting a data transfer between the HPI and the DDR2 memory controller. The switch fabrics also allow for seamless arbitration between the system masters when accessing system slaves.

4.1 Internal Buses, Bridges, and Switch Fabrics

Two types of buses exist in the C6457 device: data buses and configuration buses. Some C6457 peripherals have both a data bus and a configuration bus interface, while others only have one type of interface. Furthermore, the bus interface width and speed varies from peripheral to peripheral. Configuration buses are mainly used to access the register space of a peripheral and the data buses are used mainly for data transfers. However, in some cases, the configuration bus is also used to transfer data. For example, data is transferred to the VCP2 and TCP2 via their configuration bus. Similarly, the data bus can also be used to access the register space of a peripheral. For example, the EMIFA and DDR2 memory controller registers are accessed through their data bus interface.

The C64x+ Megamodule, the EDMA3 traffic controllers, and the various system peripherals can be classified into two categories: masters and slaves.

Masters are capable of initiating read and write transfers in the system and do not rely on the EDMA3 for their data transfers. Slaves on the other hand rely on the EDMA3 to perform transfers to and from them. Examples of masters include the EDMA3 traffic controllers, SRIO, EMAC, and HPI. Examples of slaves include the McBSP, UTOPIA, and I^2C.

The C6457 device contains two switch fabrics through which masters and slaves communicate. The data switch fabric, known as the data switched central resource (SCR), is a high-throughput interconnect mainly used to move data across the system (for more information, see Section 4.2 "Data Switch Fabric Connections"). The data SCR connects masters to slaves via 128-bit data buses running at a SYSCLK4 frequency (SYSCLK4 is generated from PLL controller). Peripherals that have a 128-bit data bus interface running at this speed can connect directly to the data SCR; other peripherals require a bridge.

The configuration switch fabric, also known as the configuration switch central resource (SCR), is mainly used by the C64x+ Megamodule to access peripheral registers (for more information, see Section 4.3 "Configuration Switch Fabric"). The configuration SCR connects C64x+ Megamodule to slaves via 32-bit configuration buses running at a SYSCLK4 frequency (SYSCLK4 is generated from PLL controller). As with the data SCR, some peripherals require the use of a bridge to interface to the configuration SCR. Note that the data SCR also connects to the configuration SCR.

Bridges perform a variety of functions:

- Conversion between configuration bus and data bus.
- Width conversion between peripheral bus width and SCR bus width.
- Frequency conversion between peripheral bus frequency and SCR bus frequency.

For example, the EMIFA requires a bridge to convert its 64-bit data bus interface into a 128-bit interface so that it can connect to the data SCR. In the case of the TCP2 and VCP2, a bridge is required to connect the data SCR to the 64-bit configuration bus interface.

Note that some peripherals can be accessed through the data SCR and also through the configuration SCR.

PRODUCT PREVIEW

PRODUCT PREVIEW

4.2 Data Switch Fabric Connections

Figure 4-1 shows the connection between slaves and masters through the data switched central resource (SCR). Masters are shown on the left and slaves on the right. The data SCR connects masters to slaves via 128-bit data buses running at a SYSCLK4 frequency. SYSCLK4 is supplied by the PLL controller and is fixed at a frequency equal to the CPU frequency divided by 3.

Figure 4-1 Data Switched Central Resource Block Diagram

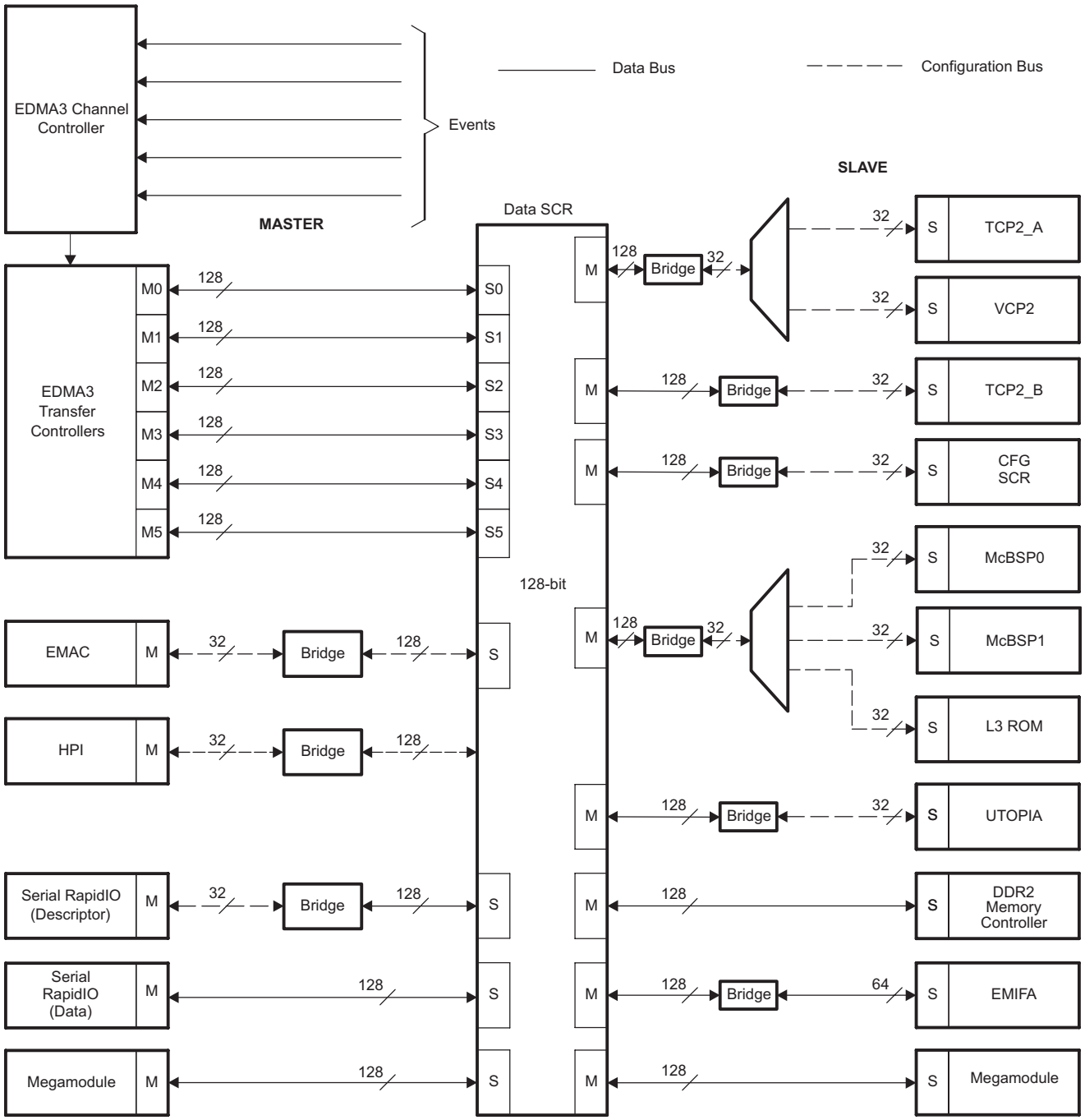

Masters are shown on the left and slaves on the right. The data SCR connects masters to slaves via 128-bit data buses running at a SYSCLK4 frequency. SYSCLK4 is supplied by the PLL controller and is fixed at a frequency equal to the CPU frequency divided by 3.

Some peripherals and the C64x+ Megamodule have both slave and master ports. Note that each EDMA3 transfer controller has an independent connection to the data SCR.

The Serial RapidIO (SRIO) peripheral has two connections to the data SCR. The first connection is used when descriptors are being fetched from system memory. The other connection is used for all other data transfers.

Note that masters can access the configuration SCR through the data SCR. The configuration SCR is described in Section 4.3 "Configuration Switch Fabric".

Not all masters on the C6457 DSP may connect to all slaves. Allowed connections are summarized in Table 4-1.

Table 4-1 SCR Connection Matrix

	VCP2	TCP2_A	TCP2_B	McBSPs	L3 ROM	UTOPIA	Configuration SCR	DDR2 Memory Controller	EMIFA	Megamodule
TC0	Y	Y	Y	N	N	N	N	Y	Y	Y
TC1	N	N	Y	Y	Y	N	N	Y	Y	Y
TC2	N	N	N	Y	Y	Y	Y	Y	Y	Y
TC3	N	N	N	N	N	Y	Y	Y	Y	Y
TC4	N	N	N	N	N	N	Y	Y	Y	Y
TC5	N	N	N	N	N	N	Y	Y	Y	Y
EMAC	N	N	N	N	N	N	N	Y	Y	Y
HPI	N	N	N	N	N	N	Y	Y	Y	Y
SRIO (1)	N	N	N	N	N	N	Y	Y	Y	Y
Megamodule	Y	Y	Y	Y	Y	Y	N	Y	Y	N
End of Table 4-1										

1 Applies to both descriptor and data accesses by the SRIO peripheral.

4.3 Configuration Switch Fabric

Figure 4-2 shows the connection between the C64x+ Megamodule and the configuration switched central resource (SCR). The configuration SCR is mainly used by the C64x+ Megamodule to access peripheral registers. The data SCR also has a connection to the configuration SCR which allows masters to access most peripheral registers. The only registers not accessible by the data SCR through the configuration SCR are the device configuration registers and the PLL controller registers; these can only be accessed by the C64x+ Megamodule.

The configuration SCR uses 32-bit configuration buses running at SYSCLK4 frequency. SYSCLK4 is supplied by the PLL controller and is fixed at a frequency equal to the CPU frequency divided by 3.

PRODUCT PREVIEW

Figure 4-2 Configuration Switched Central Resource (SCR) Block Diagram

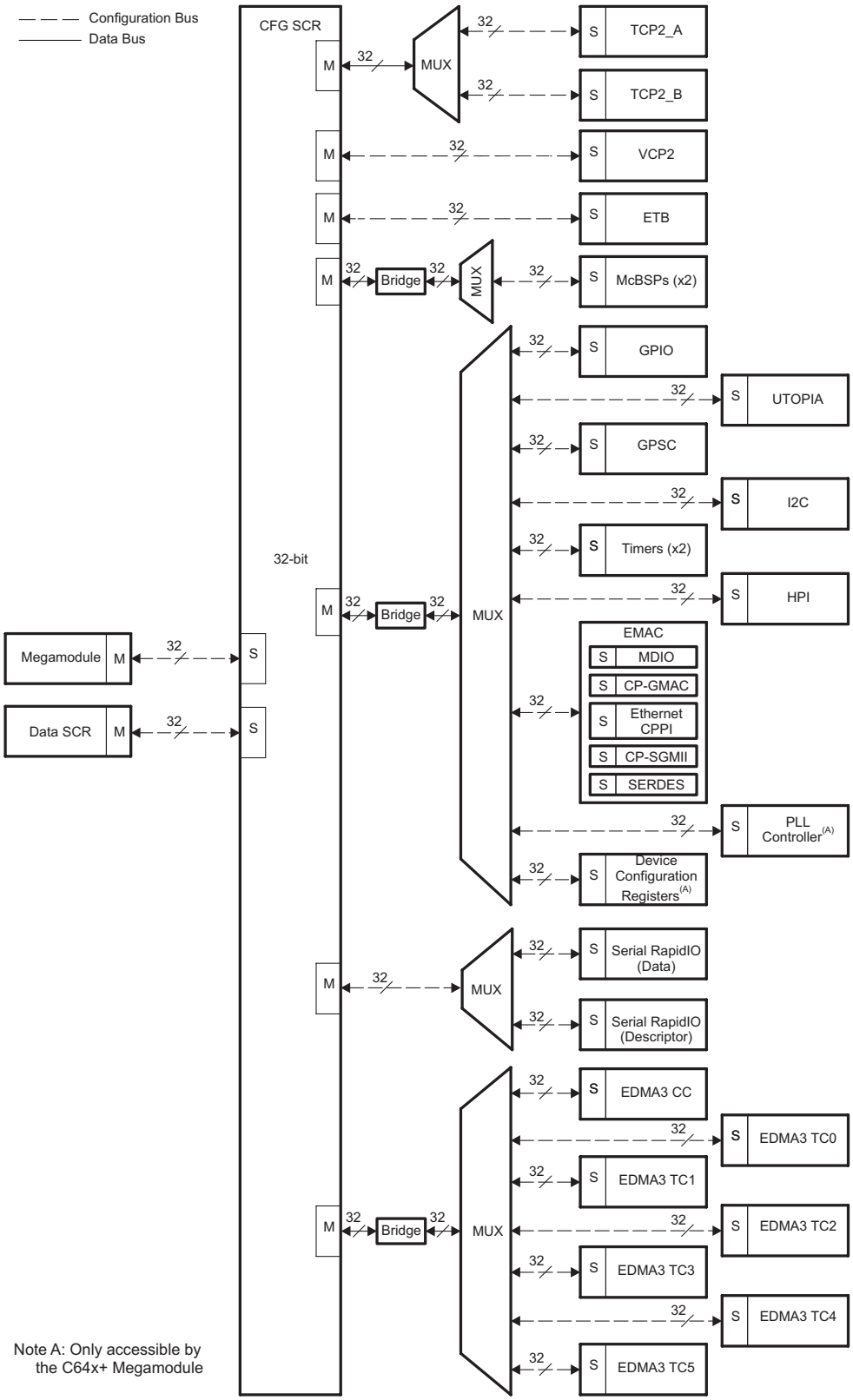

PRODUCT PREVIEW

4.4 Bus Priorities

On the TMS320C6457 device, bus priority is programmable for each master. The register bit fields and default priority levels for C6457 bus masters are shown in Table 4-2.

Table 4-2 TMS320C6457 Default Bus Master Priorities

Bus Master	Default Priority Level	Priority Control
EDMA3TC0	0	QUEPRI.PRIQ0 (EDMA3 register)
EDMA3TC1	0	QUEPRI.PRIQ1 (EDMA3 register)
EDMA3TC2	0	QUEPRI.PRIQ2 (EDMA3 register)
EDMA3TC3	0	QUEPRI.PRIQ3 (EDMA3 register)
EDMA3TC4	0	QUEPRI.PRIQ4 (EDMA3 register)
EDMA3TC5	0	QUEPRI.PRIQ5 (EDMA3 register)
EMAC	1	PRI_ALLOC.EMAC
SRIO (Data Access)	0	PER_SET_CNTL.CBA_TRANS_PRI (SRIO register)
SRIO (Descriptor Access)	1	PRI_ALLOC.SRIO_CPPI
HPI	2	PRI_ALLOC.HOST
C64x+ Megamodule (MDMA port)	7	MDMAARBE.PRI (C64x+ Megamodule Register)
End of Table 4-2		

The priority levels should be tuned to obtain the best system performance for a particular application. Lower values indicate higher priorities. For some masters, the priority values are programmed at the system level by configuring the PRI_ALLOC register. Details on the PRI_ALLOC register are shown in Table 4-3 and Table 4-4. The C64x+ megamodule, SRIO, and EDMA masters contain registers that control their own priority values.

Table 4-3 Priority Allocation Register (PRI_ALLOC)

0x0288 091C																
Bit	31	30	29	28	27	26	25	24	23	22	21	20	19	18	17	16
Acronym	Reserved															
Reset (1)	R-0000 0000 0000 0000															
Bit	15	14	13	12	11	10	9	8	7	6	5	4	3	2	1	0
Acronym	Reserved							HPI			SRIO_CPPI			EMAC		
Reset (1)	R-0000 000							R/W-010			R/W-001			R/W-001		

1 R/W = Read/Write; R = Read only; *-n* = value after reset

Table 4-4 Priority Allocation Register (PRI_ALLOC) Field Descriptions

Bit	Acronym	Value	Description
31:16	Reserved	0000 0000 0000 0000	Reserved.
15:9	Reserved	0000 000	Reserved.
8:6	HOST	010	Priority of the HPI peripheral.
5:3	SRIO_CPPI	001	Priority of the Serial RapidIO when accessing descriptors from system memory. This priority is set in the peripheral, itself.
2:0	EMAC	001	Priority of the EMAC peripheral.
End of Table 4-4			

The priority is enforced when several masters in the system are vying for the same endpoint. Note that the configuration SCR port on the data SCR is considered a single endpoint meaning priority will be enforced when multiple masters try to access the configuration SCR. Priority is also enforced on the configuration SCR side when a master (through the data SCR) tries to access the same endpoint as the C64x+ megamodule.

PRODUCT PREVIEW

In the PRI_ALLOC register, the HOST field applies to the priority of the HPI peripheral. The EMAC fields specify the priority of the EMAC peripheral. The SRIO_CPPI field is used to specify the priority of the Serial RapidIO when accessing descriptors from system memory. The priority for Serial RapidIO data accesses is set in the peripheral itself.

PRODUCT PREVIEW

5 C64x+ Megamodule

The C64x+ Megamodule consists of several components:

- The C64x+ CPU and associated C64x+ Megamodule core
- Level-one and level-two memories (L1P, L1D, L2)
- Interrupt controller
- Power-down controller
- External memory controller
- A dedicated power/sleep controller (LPSC)

The C64x+ Megamodule also provides support for memory protection and bandwidth management (for resources local to the C64x+ Megamodule). Figure 5-1 shows a block diagram of the C64x+ Megamodule.

Figure 5-1 64x+ Megamodule Block Diagram

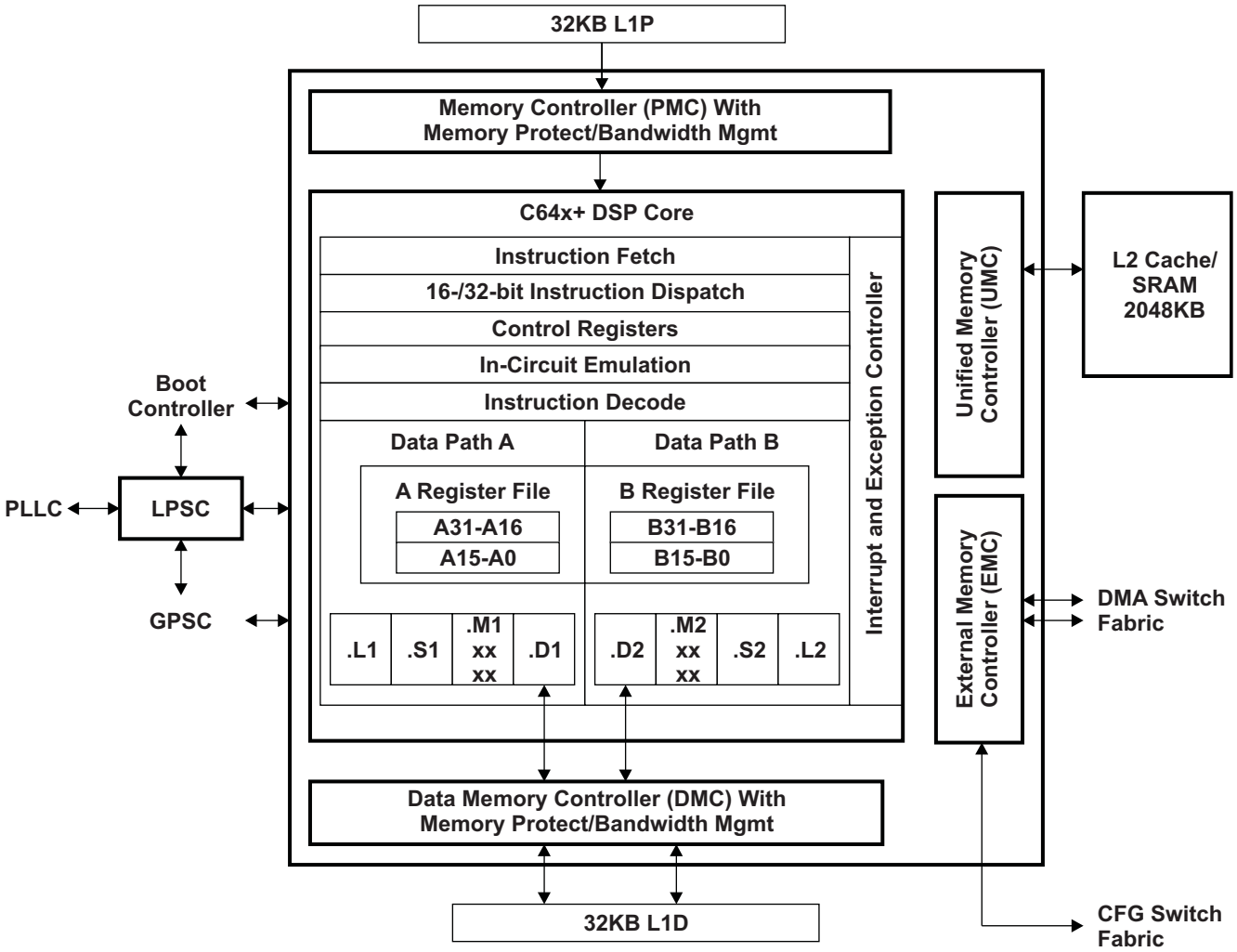

For more detailed information on the TMS320C64x+ megamodule on the C6457 device, see the *TMS320C64x+ Megamodule Reference Guide* (literature number SPRU871).

PRODUCT PREVIEW

5.1 Memory Architecture

The TMS320C6457 device contains a 2048KB level-2 memory (L2), a 32KB level-1 program memory (L1P), and a 32KB level-1 data memory (L1D). All memory on the C6457 has a unique location in the memory map (see Table 2-2 "TMS320C6457 Memory Map Summary" on page 19).

After device reset, L1P and L1D cache are configured as all cache, by default. The L1P and L1D cache can be reconfigured via software through the L1PMODE field of the L1P Configuration Register (L1PMODE) and the L1DMODE field of the L1D Configuration Register (L1DCFG) of the C64x+ Megamodule. L1D is a two-way set-associative cache, while L1P is a direct-mapped cache.

The on-chip bootloader changes the reset configuration for L1P and L1D. For more information, see the *TMS320C6457 Bootloader User's Guide* (literature number SPRUGL5).

For more information on the operation L1 and L2 caches, see the T*MS320C64x+ DSP Cache User's Guide* (literature number SPRU862).

PRODUCT PREVIEW

5.1.1 L1P Memory

The L1P memory configuration for the C6457 device is as follows:

- Region 0 size is 0K bytes (disabled)
- Region 1 size is 32K bytes with no wait states

Figure 5-2 shows the available SRAM/cache configurations for L1P.

Figure 5-2 TMS320C6457 L1P Memory Configurations

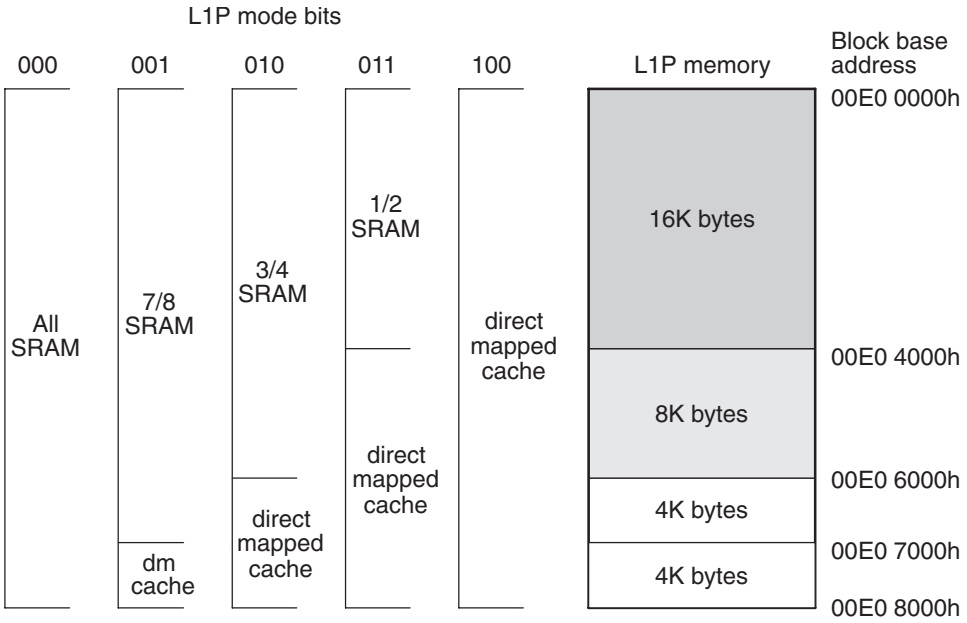

2009 Texas Instruments Incorporated

5.1.2 L1D Memory

The L1D memory configuration for the C6457 device is as follows:

- Region 0 size is 0K bytes (disabled)
- Region 1 size is 32K bytes with no wait states

Figure 5-3 shows the available SRAM/cache configurations for L1D.

Figure 5-3 TMS320C6457 L1D Memory Configurations

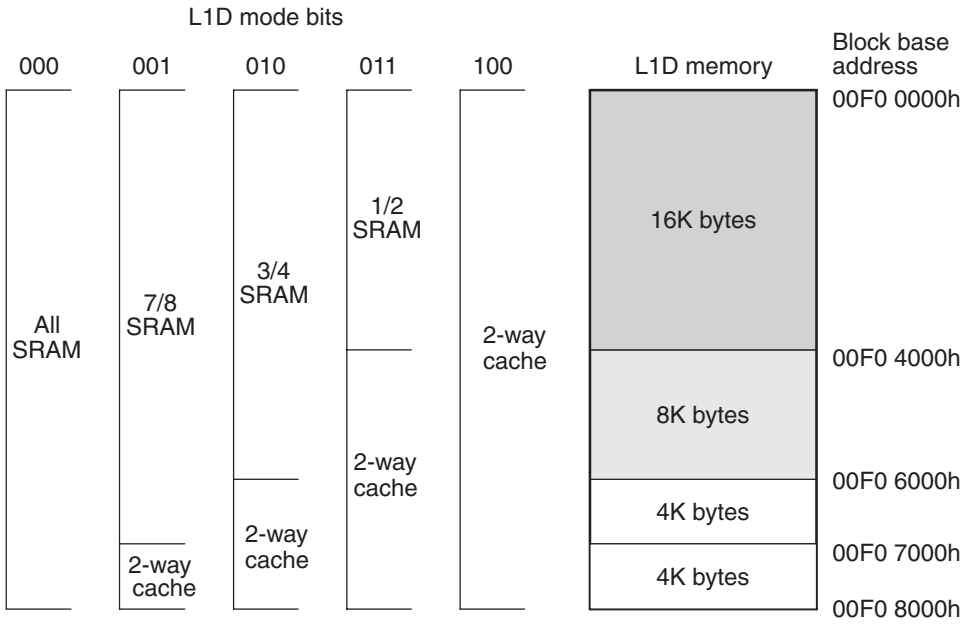

PRODUCT PREVIEW

5.1.3 L2 Memory

The L2 memory configuration for the C6457 device is as follows:

- Memory size is 2048KB
- Starting address is 0080 0000h

L2 memory can be configured as all SRAM or as part 4-way set-associative cache. The amount of L2 memory that is configured as cache is controlled through the L2MODE field of the L2 Configuration Register (L2CFG) of the C64x+ Megamodule. Figure 5-4 shows the available SRAM/cache configurations for L2. By default, L2 is configured as all SRAM after device reset.

Figure 5-4 TMS320C6457 L2 Memory Configurations

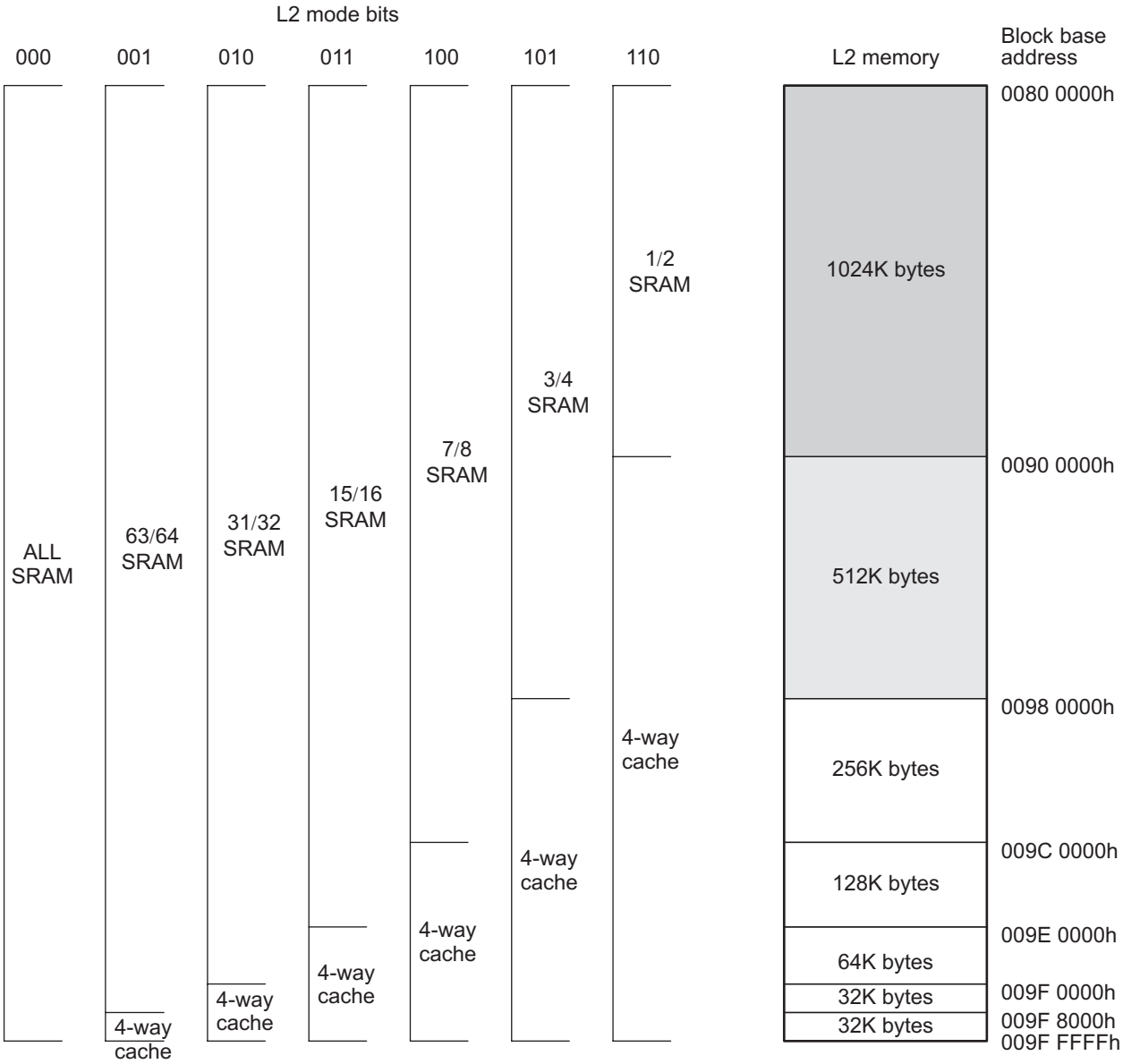

PRODUCT PREVIEW

2009 Texas Instruments Incorporated

5.1.4 L3 Memory

The L3 ROM on the device is 64KB. The contents of the ROM are divided into two partitions. The first is the ROM bootloader with the primary purpose of containing software to boot the device. There is no requirement to block accesses from this portion to the ROM. The second partition is the secure portion of ROM, which has a secure kernel that is necessary for support of security features on the device. The secure portion of ROM cannot be accessed both on secure, and non-secure parts. Only secure supervisors should have access.

Emulation accesses follows the same rules of the secure portion of the ROM. Emulation can access the non-secure portion of the ROM, but cannot read the secure portion of the ROM.

5.2 Memory Protection

Memory protection allows an operating system to define who or what is authorized to access L1D, L1P, and L2 memory. To accomplish this, the L1D, L1P, and L2 memories are divided into pages. There are 16 pages of L1P (2KB each), 16 pages of L1D (2KB each), and 64 pages of L2 (32KB each). The L1D, L1P, and L2 memory controllers in the C64x+ Megamodule are equipped with a set of registers that specify the permissions for each memory page.

Each page may be assigned with fully orthogonal user and supervisor read, write, and execute permissions. In addition, a page may be marked as either (or both) locally accessible or globally accessible. A local access is a direct CPU access to L1D, L1P, and L2, while a global access is initiated by a DMA (either IDMA or the EDMA3) or by other system masters. Note that EDMA or IDMA transfers programmed by the CPU count as global accesses. On a secure device, pages can be restricted to secure access only (default) or opened up for public, non-secure access.

The CPU and each of the system masters on the device are all assigned a privilege ID (see Table 5-1). It is only possible to specify whether memory pages are locally or globally accessible.

Table 5-1 Available Memory Page Protection Scheme With Privilege ID

Privid Module	Description
0	C64x+ Megamodule
1	Reserved
2	Reserved
3	EMAC
4	RapidIO and RapidIO CPPI
5	HPI
End of Table 5-1	

The AID0 and LOCAL bits of the memory protection page attribute registers specify the memory page protection scheme, see Table 5-2.

Table 5-2 Available Memory Page Protection Schemes

AID0 Bit	Local Bit	Description
0	0	No access to memory page is permitted.
0	1	Only direct access by CPU is permitted.
1	0	Only accesses by system masters and IDMA are permitted (includes EDMA and IDMA accesses initiated by the CPU).
1	1	All accesses permitted

Faults are handled by software in an interrupt (or an exception, programmable within the C64x+ megamodule interrupt controller) service routine. A CPU or DMA access to a page without the proper permissions will:

- Block the access — reads return zero, writes are ignored
- Capture the initiator in a status register — ID, address, and access type are stored
- Signal event to CPU interrupt controller

PRODUCT PREVIEW

The software is responsible for taking corrective action to respond to the event and resetting the error status in the memory controller. For more information on memory protection for L1D, L1P, and L2, see the *TMS320C64x+ Megamodule Reference Guide* (literature number SPRU871).

5.3 Bandwidth Management

When multiple requestors contend for a single C64x+ Megamodule resource, the conflict is resolved by granting access to the highest priority requestor. The following four resources are managed by the Bandwidth Management control hardware:

- Level 1 Program (L1P) SRAM/Cache
- Level 1 Data (L1D) SRAM/Cache
- Level 2 (L2) SRAM/Cache
- Memory-mapped registers configuration bus

The priority level for operations initiated within the C64x+ Megamodule are declared through registers in the C64x+ Megamodule. These operations are:

- CPU-initiated transfers
- User-programmed cache coherency operations
- IDMA-initiated transfers

The priority level for operations initiated outside the C64x+ Megamodule by system peripherals is declared through the Priority Allocation Register (PRI_ALLOC), see Section 4.4 "Bus Priorities" on page 69. System peripherals with no fields in PRI_ALLOC have their own registers to program their priorities.

More information on the bandwidth management features of the C64x+ Megamodule can be found in the *TMS320C64x+ Megamodule Reference Guide* (literature number SPRU871.)

5.4 Power-Down Control

The C64x+ Megamodule supports the ability to power-down various parts of the C64x+ Megamodule. The power-down controller (PDC) of the C64x+ Megamodule can be used to power down L1P, the cache control hardware, the CPU, and the entire C64x+ Megamodule. These power-down features can be used to design systems for lower overall system power requirements.

Note—The C6457 does not support power-down modes for the L2 memory at this time.

More information on the power-down features of the C64x+ Megamodule can be found in the *TMS320C64x+ Megamodule Reference Guide* (literature number SPRU871).

PRODUCT PREVIEW

5.5 Megamodule Resets

Table 5-3 shows the reset types supported on the C6457 device and they affect the resetting of the Megamodule, either both globally or just locally.

Table 5-3 Megamodule Reset (Global or Local)

Reset Type	Global Megamodule Reset	Local Megamodule Reset
Power-On Reset	Y	Y
Warm Reset	Y	Y
System Reset	Y	Y
CPU Reset	N	Y
End of Table 5-3		

For more detailed information on the global and local Megamodule resets, see the *TMS320C64x+ Megamodule Reference Guide* (literature number SPRU871). And for more detailed information on device resets, see Section 7.6 "Reset Controller" on page 123.

5.6 Megamodule Revision

The version and revision of the C64x+ Megamodule can be read from the Megamodule Revision ID Register (MM_REVID) located at address 0181 2000h. The MM_REVID register is shown in Table 5-4 and described in Table 5-5. The C64x+ Megamodule revision is dependant on the silicon revision being used.

Table 5-4 Megamodule Revision ID Register (MM_REVID)

Address - 0181 2000h																
Bit	31	30	29	28	27	26	25	24	23	22	21	20	19	18	17	16
Acronym	VERSION															
Reset (1)	R-5h															
Bit	15	14	13	12	11	10	9	8	7	6	5	4	3	2	1	0
Acronym	REVISION															
Reset (1)	R-n															

1 R/W = Read/Write; R = Read only; *-n* = value after reset

Table 5-5 Megamodule Revision ID Register (MM_REVID) Field Descriptions

Bit	Acronym	Value	Description
31:16	VERSION	5h	Version of the C64x+ Megamodule implemented on the device. This field is always read as 5h.
15:0	REVISION	-	Revision of the C64x+ Megamodule version implemented on the device.
End of Table 5-5			

5.7 C64x+ Megamodule Register Descriptions

Table 5-6 Megamodule Interrupt Registers (Part 1 of 2)

Hex Address Range	Acronym	Register Name
0180 0000	EVTFLAG0	Event Flag Register 0 (Events [31:0])
0180 0004	EVTFLAG1	Event Flag Register 1
0180 0008	EVTFLAG2	Event Flag Register 2
0180 000C	EVTFLAG3	Event Flag Register 3
0180 0010 - 0180 001C	-	Reserved
0180 0020	EVTSET0	Event Set Register 0 (Events [31:0])
0180 0024	EVTSET1	Event Set Register 1

PRODUCT PREVIEW

Table 5-6 Megamodule Interrupt Registers (Part 2 of 2)

Hex Address Range	Acronym	Register Name
0180 0028	EVTSET2	Event Set Register 2
0180 002C	EVTSET3	Event Set Register 3
0180 0030 - 0180 003C	-	Reserved
0180 0040	EVTCLR0	Event Clear Register 0 (Events [31:0])
0180 0044	EVTCLR1	Event Clear Register 1
0180 0048	EVTCLR2	Event Clear Register 2
0180 004C	EVTCLR3	Event Clear Register 3
0180 0050 - 0180 007C	-	Reserved
0180 0080	EVTMASK0	Event Mask Register 0 (Events [31:0])
0180 0084	EVTMASK1	Event Mask Register 1
0180 0088	EVTMASK2	Event Mask Register 2
0180 008C	EVTMASK3	Event Mask Register 3
0180 0090 - 0180 009C	-	Reserved
0180 00A0	MEVTFLAG0	Masked Event Flag Status Register 0 (Events [31:0])
0180 00A4	MEVTFLAG1	Masked Event Flag Status Register 1
0180 00A8	MEVTFLAG2	Masked Event Flag Status Register 2
0180 00AC	MEVTFLAG3	Masked Event Flag Status Register 3
0180 00B0 - 0180 00BC	-	Reserved
0180 00C0	EXPMASK0	Exception Mask Register 0 (Events [31:0])
0180 00C4	EXPMASK1	Exception Mask Register 1
0180 00C8	EXPMASK2	Exception Mask Register 2
0180 00CC	EXPMASK3	Exception Mask Register 3
0180 00D0 - 0180 00DC	-	Reserved
0180 00E0	MEXPFLAG0	Masked Exception Flag Register 0
0180 00E4	MEXPFLAG1	Masked Exception Flag Register 1
0180 00E8	MEXPFLAG2	Masked Exception Flag Register 2
0180 00EC	MEXPFLAG3	Masked Exception Flag Register 3
0180 00F0 - 0180 00FC	-	Reserved
0180 0100	-	Reserved
0180 0104	INTMUX1	Interrupt Multiplexor Register 1
0180 0108	INTMUX2	Interrupt Multiplexor Register 2
0180 010C	INTMUX3	Interrupt Multiplexor Register 3
0180 0110 - 0180 013C	-	Reserved
0180 0140	AEGMUX0	Advanced Event Generator Mux Register 0
0180 0144	AEGMUX1	Advanced Event Generator Mux Register 1
0180 0148 - 0180 017C	-	Reserved
0180 0180	INTXSTAT	Interrupt Exception Status Register
0180 0184	INTXCLR	Interrupt Exception Clear Register
0180 0188	INTDMASK	Dropped Interrupt Mask Register
0180 0188 - 0180 01BC	-	Reserved
0180 01C0	EVTASRT	Event Asserting Register
0180 01C4 - 0180 FFFF	-	Reserved
End of Table 5-6		

PRODUCT PREVIEW

Table 5-7 Megamodule Powerdown Control Registers

Hex Address Range	Acronym	Register Name
0181 0000	PDCCMD	Power-down controller command register
0181 0004 - 0181 1FFF	-	Reserved
End of Table 5-7		

Table 5-8 Megamodule Revision Register

Hex Address Range	Acronym	Register Name
0181 2000	MM_REVID	Megamodule Revision ID Register
0181 2004 - 0181 2FFF	-	Reserved
End of Table 5-8		

Table 5-9 Megamodule IDMA Registers

Hex Address Range	Acronym	Register Name
0182 0000	IDMA0STAT	IDMA Channel 0 Status Register
0182 0004	IDMA0MASK	IDMA Channel 0 Mask Register
0182 0008	IMDA0SRC	IDMA Channel 0 Source Address Register
0182 000C	IDMA0DST	IDMA Channel 0 Destination Address Register
0182 0010	IDMA0CNT	IDMA Channel 0 Count Register
0182 0014 - 0182 00FC	-	Reserved
0182 0100	IDMA1STAT	IDMA Channel 1 Status Register
0182 0104	-	Reserved
0182 0108	IMDA1SRC	IDMA Channel 1 Source Address Register
0182 010C	IDMA1DST	IDMA Channel 1 Destination Address Register
0182 0110	IDMA1CNT	IDMA Channel 1 Count Register
0182 0114 - 0182 017C	-	Reserved
0182 0180	-	Reserved
0182 0184 - 0182 01FF	-	Reserved
End of Table 5-9		

Table 5-10 Megamodule Cache Configuration Registers (Part 1 of 4)

Hex Address Range	Acronym	Register Name
0184 0000	L2CFG	L2 Cache Configuration Register
0184 0004 - 0184 001F	-	Reserved
0184 0020	L1PCFG	L1P Configuration Register
0184 0024	L1PCC	L1P Cache Control Register
0184 0028 - 0184 003F	-	Reserved
0184 0040	L1DCFG	L1D Configuration Register
0184 0044	L1DCC	L1D Cache Control Register
0184 0048 - 0184 0FFF	-	Reserved
0184 1000 - 0184 104F	-	See Table 5-13 "CPU Megamodule Bandwidth Management Registers"
0184 1050 - 0184 3FFF	-	Reserved
0184 4000	L2WBAR	L2 Writeback Base Address Register — for Block Writebacks
0184 4004	L2WWC	L2 Writeback Word Count Register
0184 4008 - 0184 400C	-	Reserved

PRODUCT PREVIEW

Table 5-10 Megamodule Cache Configuration Registers (Part 2 of 4)

Hex Address Range	Acronym	Register Name
0184 4010	L2WIBAR	L2 Writeback and Invalidate Base Address Register — for Block Writebacks
0184 4014	L2WIWC	L2 Writeback and Invalidate word count register
0184 4018	L2IBAR	L2 Invalidate Base Address Register
0184 401C	L2IWC	L2 Invalidate Word Count Register
0184 4020	L1PIBAR	L1P Invalidate Base Address Register
0184 4024	L1PIWC	L1P Invalidate Word Count Register
0184 4030	L1DWIBAR	L1D Writeback and Invalidate Base Address Register
0184 4034	L1DWIWC	L1D Writeback and Invalidate Word Count Register
0184 4038	-	Reserved
0184 4040	L1DWBAR	L1D Writeback Base Address Register — for Block Writebacks
0184 4044	L1DWWC	L1D Writeback Word Count Register
0184 4048	L1DIBAR	L1D Invalidate Base Address Register
0184 404C	L1DIWC	L1D Invalidate Word Count Register
0184 4050 - 0184 4FFF	-	Reserved
0184 5000	L2WB	L2 Global Writeback Register
0184 5004	L2WBINV	L2 Global Writeback and Invalidate Register
0184 5008	L2INV	L2 Global Invalidate Register
0184 500C - 0184 5024	-	Reserved
0184 5028	L1PINV	L1P Global Invalidate Register
0184 502C - 0184 503C	-	Reserved
0184 5040	L1DWB	L1D Global Writeback Register
0184 5044	L1DWBINV	L1D Global Writeback and Invalidate Register
0184 5048	L1DINV	L1D Global Invalidate Register
0184 504C - 0184 5FFF	-	Reserved
0184 6000 - 0184 640F	-	See Table 5-11 "Megamodule Error Detection Correct Registers"
0184 6410 - 0184 7FFF	-	Reserved
0184 8000 - 0184 81FC	MAR0 to MAR127	Reserved
0184 8200 - 0184 823C	MAR128 to MAR143	Reserved
0184 8240 - 0184 827C	MAR144 to MAR159	Reserved
0184 8280	MAR160	Controls EMIFA CE2 Range A000 0000 - A0FF FFFF
0184 8284	MAR161	Controls EMIFA CE2 Range A100 0000 - A1FF FFFF
0184 8288	MAR162	Controls EMIFA CE2 Range A200 0000 - A2FF FFFF
0184 828C	MAR163	Controls EMIFA CE2 Range A300 0000 - A3FF FFFF
0184 8290	MAR164	Controls EMIFA CE2 Range A400 0000 - A4FF FFFF
0184 8294	MAR165	Controls EMIFA CE2 Range A500 0000 - A5FF FFFF
0184 8298	MAR166	Controls EMIFA CE2 Range A600 0000 - A6FF FFFF
0184 829C	MAR167	Controls EMIFA CE2 Range A700 0000 - A7FF FFFF
0184 82A0	MAR168	Controls EMIFA CE2 Range A800 0000 - A8FF FFFF
0184 82A4	MAR169	Controls EMIFA CE2 Range A900 0000 - A9FF FFFF
0184 82A8	MAR170	Controls EMIFA CE2 Range AA00 0000 - AAFF FFFF
0184 82AC	MAR171	Controls EMIFA CE2 Range AB00 0000 - ABFF FFFF
0184 82B0	MAR172	Controls EMIFA CE2 Range AC00 0000 - ACFF FFFF
0184 82B4	MAR173	Controls EMIFA CE2 Range AD00 0000 - ADFF FFFF
0184 82B8	MAR174	Controls EMIFA CE2 Range AE00 0000 - AEFF FFFF

PRODUCT PREVIEW

2009 Texas Instruments Incorporated

Table 5-10 Megamodule Cache Configuration Registers (Part 3 of 4)

Hex Address Range	Acronym	Register Name
0184 82BC	MAR175	Controls EMIFA CE2 Range AF00 0000 - AFFF FFFF
0184 82C0	MAR176	Controls EMIFA CE3 Range B000 0000 - B0FF FFFF
0184 82C4	MAR177	Controls EMIFA CE3 Range B100 0000 - B1FF FFFF
0184 82C8	MAR178	Controls EMIFA CE3 Range B200 0000 - B2FF FFFF
0184 82CC	MAR179	Controls EMIFA CE3 Range B300 0000 - B3FF FFFF
0184 82D0	MAR180	Controls EMIFA CE3 Range B400 0000 - B4FF FFFF
0184 82D4	MAR181	Controls EMIFA CE3 Range B500 0000 - B5FF FFFF
0184 82D8	MAR182	Controls EMIFA CE3 Range B600 0000 - B6FF FFFF
0184 82DC	MAR183	Controls EMIFA CE3 Range B700 0000 - B7FF FFFF
0184 82E0	MAR184	Controls EMIFA CE3 Range B800 0000 - B8FF FFFF
0184 82E4	MAR185	Controls EMIFA CE3 Range B900 0000 - B9FF FFFF
0184 82E8	MAR186	Controls EMIFA CE3 Range BA00 0000 - BAFF FFFF
0184 82EC	MAR187	Controls EMIFA CE3 Range BB00 0000 - BBFF FFFF
0184 82F0	MAR188	Controls EMIFA CE3 Range BC00 0000 - BCFF FFFF
0184 82F4	MAR189	Controls EMIFA CE3 Range BD00 0000 - BDFF FFFF
0184 82F8	MAR190	Controls EMIFA CE3 Range BE00 0000 - BEFF FFFF
0184 82FC	MAR191	Controls EMIFA CE3 Range BF00 0000 - BFFF FFFF
0184 8300	MAR192	Controls EMIFA CE4 Range C000 0000 - C0FF FFFF
0184 8304	MAR193	Controls EMIFA CE4 Range C100 0000 - C1FF FFFF
0184 8308	MAR194	Controls EMIFA CE4 Range C200 0000 - C2FF FFFF
0184 830C	MAR195	Controls EMIFA CE4 Range C300 0000 - C3FF FFFF
0184 8310	MAR196	Controls EMIFA CE4 Range C400 0000 - C4FF FFFF
0184 8314	MAR197	Controls EMIFA CE4 Range C500 0000 - C5FF FFFF
0184 8318	MAR198	Controls EMIFA CE4 Range C600 0000 - C6FF FFFF
0184 831C	MAR199	Controls EMIFA CE4 Range C700 0000 - C7FF FFFF
0184 8320	MAR200	Controls EMIFA CE4 Range C800 0000 - C8FF FFFF
0184 8324	MAR201	Controls EMIFA CE4 Range C900 0000 - C9FF FFFF
0184 8328	MAR202	Controls EMIFA CE4 Range CA00 0000 - CAFF FFFF
0184 832C	MAR203	Controls EMIFA CE4 Range CB00 0000 - CBFF FFFF
0184 8330	MAR204	Controls EMIFA CE4 Range CC00 0000 - CCFF FFFF
0184 8334	MAR205	Controls EMIFA CE4 Range CD00 0000 - CDFF FFFF
0184 8338	MAR206	Controls EMIFA CE4 Range CE00 0000 - CEFF FFFF
0184 833C	MAR207	Controls EMIFA CE4 Range CF00 0000 - CFFF FFFF
0184 8340	MAR208	Controls EMIFA CE5 Range D000 0000 - D0FF FFFF
0184 8344	MAR209	Controls EMIFA CE5 Range D100 0000 - D1FF FFFF
0184 8348	MAR210	Controls EMIFA CE5 Range D200 0000 - D2FF FFFF
0184 834C	MAR211	Controls EMIFA CE5 Range D300 0000 - D3FF FFFF
0184 8350	MAR212	Controls EMIFA CE5 Range D400 0000 - D4FF FFFF
0184 8354	MAR213	Controls EMIFA CE5 Range D500 0000 - D5FF FFFF
0184 8358	MAR214	Controls EMIFA CE5 Range D600 0000 - D6FF FFFF
0184 835C	MAR215	Controls EMIFA CE5 Range D700 0000 - D7FF FFFF
0184 8360	MAR216	Controls EMIFA CE5 Range D800 0000 - D8FF FFFF
0184 8364	MAR217	Controls EMIFA CE5 Range D900 0000 - D9FF FFFF
0184 8368	MAR218	Controls EMIFA CE5 Range DA00 0000 - DAFF FFFF

PRODUCT PREVIEW

PRODUCT PREVIEW

Table 5-10 Megamodule Cache Configuration Registers (Part 4 of 4)

Hex Address Range	Acronym	Register Name
0184 836C	MAR219	Controls EMIFA CE5 Range DB00 0000 - DBFF FFFF
0184 8370	MAR220	Controls EMIFA CE5 Range DC00 0000 - DCFF FFFF
0184 8374	MAR221	Controls EMIFA CE5 Range DD00 0000 - DDFF FFFF
0184 8378	MAR222	Controls EMIFA CE5 Range DE00 0000 - DEFF FFFF
0184 837C	MAR223	Controls EMIFA CE5 Range DF00 0000 - DFFF FFFF
0184 8380	MAR224	Controls DDR2 CE0 Range E000 0000 - E0FF FFFF
0184 8384	MAR225	Controls DDR2 CE0 Range E100 0000 - E1FF FFFF
0184 8388	MAR226	Controls DDR2 CE0 Range E200 0000 - E2FF FFFF
0184 838C	MAR227	Controls DDR2 CE0 Range E300 0000 - E3FF FFFF
0184 8390	MAR228	Controls DDR2 CE0 Range E400 0000 - E4FF FFFF
0184 8394	MAR229	Controls DDR2 CE0 Range E500 0000 - E5FF FFFF
0184 8398	MAR230	Controls DDR2 CE0 Range E600 0000 - E6FF FFFF
0184 839C	MAR231	Controls DDR2 CE0 Range E700 0000 - E7FF FFFF
0184 83A0	MAR232	Controls DDR2 CE0 Range E800 0000 - E8FF FFFF
0184 83A4	MAR233	Controls DDR2 CE0 Range E900 0000 - E9FF FFFF
0184 83A8	MAR234	Controls DDR2 CE0 Range EA00 0000 - EAFF FFFF
0184 83AC	MAR235	Controls DDR2 CE0 Range EB00 0000 - EBFF FFFF
0184 83B0	MAR236	Controls DDR2 CE0 Range EC00 0000 - ECFF FFFF
0184 83B4	MAR237	Controls DDR2 CE0 Range ED00 0000 - EDFF FFFF
0184 83B8	MAR238	Controls DDR2 CE0 Range EE00 0000 - EEFF FFFF
0184 83BC	MAR239	Controls DDR2 CE0 Range EF00 0000 - EFFF FFFF
0184 83C0 - 0184 83FC	MAR240 to MAR255	Reserved
End of Table 5-10		

Table 5-11 Megamodule Error Detection Correct Registers

Hex Address Range	Acronym	Register Name
0184 6000	-	Reserved
0184 6004	L2EDSTAT	L2 Error Detection Status Register
0184 6008	L2EDCMD	L2 Error Detection Command Register
0184 600C	L2EDADDR	L2 Error Detection Address Register
0184 6010	L2EDEN0	L2 Error Detection Enable Map 0 Register
0184 6014	L2EDEN1	L2 Error Detection Enable Map 1 Register
0184 6018	L2EDCPEC	L2 Error Detection — Correctable Parity Error Count Register
0184 601C	L2EDNPEC	L2 Error Detection — Non-Correctable Parity Error Count Register
0184 6020 - 0184 6400	-	Reserved
0184 6404	L1PEDSTAT	L1P Error Detection Status Register
0184 6408	L1PEDCMD	L1P Error Detection Command Register
0184 640C	L1PEDADDR	L1P Error Detection Address Register
End of Table 5-11		

2009 Texas Instruments Incorporated

Table 5-12 Megamodule L1/L2 Memory Protection Registers (Part 1 of 3)

Hex Address Range	Acronym	Register Name
0184 A000	L2MPFAR	L2 memory protection fault address register
0184 A004	L2MPFSR	L2 memory protection fault status register
0184 A008	L2MPFCR	L2 memory protection fault command register
0184 A00C - 0184 A0FF	-	Reserved
0184 A100	L2MPLK0	L2 memory protection lock key bits [31:0]
0184 A104	L2MPLK1	L2 memory protection lock key bits [63:32]
0184 A108	L2MPLK2	L2 memory protection lock key bits [95:64]
0184 A10C	L2MPLK3	L2 memory protection lock key bits [127:96]
0184 A110	L2MPLKCMD	L2 memory protection lock key command register
0184 A114	L2MPLKSTAT	L2 memory protection lock key status register
0184 A118 - 0184 A1FF	-	Reserved
0184 A200	L2MPPA0	L2 memory protection page attribute register 0
0184 A204	L2MPPA1	L2 memory protection page attribute register 1
0184 A208	L2MPPA2	L2 memory protection page attribute register 2
0184 A20C	L2MPPA3	L2 memory protection page attribute register 3
0184 A210	L2MPPA4	L2 memory protection page attribute register 4
0184 A214	L2MPPA5	L2 memory protection page attribute register 5
0184 A218	L2MPPA6	L2 memory protection page attribute register 6
0184 A21C	L2MPPA7	L2 memory protection page attribute register 7
0184 A220	L2MPPA8	L2 memory protection page attribute register 8
0184 A224	L2MPPA9	L2 memory protection page attribute register 9
0184 A228	L2MPPA10	L2 memory protection page attribute register 10
0184 A22C	L2MPPA11	L2 memory protection page attribute register 11
0184 A230	L2MPPA12	L2 memory protection page attribute register 12
0184 A234	L2MPPA13	L2 memory protection page attribute register 13
0184 A238	L2MPPA14	L2 memory protection page attribute register 14
0184 A23C	L2MPPA15	L2 memory protection page attribute register 15
0184 A240	L2MPPA16	L2 memory protection page attribute register 16
0184 A244	L2MPPA17	L2 memory protection page attribute register 17
0184 A248	L2MPPA18	L2 memory protection page attribute register 18
0184 A24C	L2MPPA19	L2 memory protection page attribute register 19
0184 A250	L2MPPA20	L2 memory protection page attribute register 20
0184 A254	L2MPPA21	L2 memory protection page attribute register 21
0184 A258	L2MPPA22	L2 memory protection page attribute register 22
0184 A25C	L2MPPA23	L2 memory protection page attribute register 23
0184 A260	L2MPPA24	L2 memory protection page attribute register 24
0184 A264	L2MPPA25	L2 memory protection page attribute register 25
0184 A268	L2MPPA26	L2 memory protection page attribute register 26
0184 A26C	L2MPPA27	L2 memory protection page attribute register 27
0184 A270	L2MPPA28	L2 memory protection page attribute register 28
0184 A274	L2MPPA29	L2 memory protection page attribute register 29
0184 A278	L2MPPA30	L2 memory protection page attribute register 30
0184 A27C	L2MPPA31	L2 memory protection page attribute register 31
0184 A280 - 0184 A2FC (1)	-	Reserved

PRODUCT PREVIEW

Table 5-12 Megamodule L1/L2 Memory Protection Registers (Part 2 of 3)

Hex Address Range	Acronym	Register Name
0184 0300 - 0184 A3FF	-	Reserved
0184 A400	L1PMPFAR	L1 program (L1P) memory protection fault address register
0184 A404	L1PMPFSR	L1P memory protection fault status register
0184 A408	L1PMPFCR	L1P memory protection fault command register
0184 A40C - 0184 A4FF	-	Reserved
0184 A500	L1PMPLK0	L1P memory protection lock key bits [31:0]
0184 A504	L1PMPLK1	L1P memory protection lock key bits [63:32]
0184 A508	L1PMPLK2	L1P memory protection lock key bits [95:64]
0184 A50C	L1PMPLK3	L1P memory protection lock key bits [127:96]
0184 A510	L1PMPLKCMD	L1P memory protection lock key command register
0184 A514	L1PMPLKSTAT	L1P memory protection lock key status register
0184 A518 - 0184 A5FF	-	Reserved
0184 A600 - 0184 A63C (2)	-	Reserved
0184 A640	L1PMPPA16	L1P memory protection page attribute register 16
0184 A644	L1PMPPA17	L1P memory protection page attribute register 17
0184 A648	L1PMPPA18	L1P memory protection page attribute register 18
0184 A64C	L1PMPPA19	L1P memory protection page attribute register 19
0184 A650	L1PMPPA20	L1P memory protection page attribute register 20
0184 A654	L1PMPPA21	L1P memory protection page attribute register 21
0184 A658	L1PMPPA22	L1P memory protection page attribute register 22
0184 A65C	L1PMPPA23	L1P memory protection page attribute register 23
0184 A660	L1PMPPA24	L1P memory protection page attribute register 24
0184 A664	L1PMPPA25	L1P memory protection page attribute register 25
0184 A668	L1PMPPA26	L1P memory protection page attribute register 26
0184 A66C	L1PMPPA27	L1P memory protection page attribute register 27
0184 A670	L1PMPPA28	L1P memory protection page attribute register 28
0184 A674	L1PMPPA29	L1P memory protection page attribute register 29
0184 A678	L1PMPPA30	L1P memory protection page attribute register 30
0184 A67C	L1PMPPA31	L1P memory protection page attribute register 31
0184 A680 - 0184 ABFF	-	Reserved
0184 AC00	L1DMPFAR	L1 data (L1D) memory protection fault address register
0184 AC04	L1DMPFSR	L1D memory protection fault status register
0184 AC08	L1DMPFCR	L1D memory protection fault command register
0184 AC0C - 0184 ACFF	-	Reserved
0184 AD00	L1DMPLK0	L1D memory protection lock key bits [31:0]
0184 AD04	L1DMPLK1	L1D memory protection lock key bits [63:32]
0184 AD08	L1DMPLK2	L1D memory protection lock key bits [95:64]
0184 AD0C	L1DMPLK3	L1D memory protection lock key bits [127:96]
0184 AD10	L1DMPLKCMD	L1D memory protection lock key command register
0184 AD14	L1DMPLKSTAT	L1D memory protection lock key status register
0184 AD18 - 0184 ADFF	-	Reserved
0184 AE00 - 0184 AE3C (3)	-	Reserved
0184 AE40	L1DMPPA16	L1D memory protection page attribute register 16
0184 AE44	L1DMPPA17	L1D memory protection page attribute register 17

PRODUCT PREVIEW

Table 5-12 Megamodule L1/L2 Memory Protection Registers (Part 3 of 3)

Hex Address Range	Acronym	Register Name
0184 AE48	L1DMPPA18	L1D memory protection page attribute register 18
0184 AE4C	L1DMPPA19	L1D memory protection page attribute register 19
0184 AE50	L1DMPPA20	L1D memory protection page attribute register 20
0184 AE54	L1DMPPA21	L1D memory protection page attribute register 21
0184 AE58	L1DMPPA22	L1D memory protection page attribute register 22
0184 AE5C	L1DMPPA23	L1D memory protection page attribute register 23
0184 AE60	L1DMPPA24	L1D memory protection page attribute register 24
0184 AE64	L1DMPPA25	L1D memory protection page attribute register 25
0184 AE68	L1DMPPA26	L1D memory protection page attribute register 26
0184 AE6C	L1DMPPA27	L1D memory protection page attribute register 27
0184 AE70	L1DMPPA28	L1D memory protection page attribute register 28
0184 AE74	L1DMPPA29	L1D memory protection page attribute register 29
0184 AE78	L1DMPPA30	L1D memory protection page attribute register 30
0184 AE7C	L1DMPPA31	L1D memory protection page attribute register 31
0184 AE80 - 0185 FFFF	-	Reserved
End of Table 5-12		

1 These addresses correspond to the L2 memory protection page attribute registers 32-63 (L2MPPA32 - L2MPPA63) of the C64x+ Megamodule. These registers are not supported for the C6457 device.

2 These addresses correspond to the L1P memory protection page attribute registers 0-15 (L1PMPPA0 - L1PMPPA15) of the C64x+ Megamodule. These registers are not supported for the C6457 device.

3 These addresses correspond to the L1D memory protection page attribute registers 0-15 (L1DMPPA0 - L1DMPPA15) of the C64x+ Megamodule. These registers are not supported for the C6457 device.

Table 5-13 CPU Megamodule Bandwidth Management Registers

Hex Address Range	Acronym	Register Name
0182 0200	EMCCPUARBE	EMC CPU Arbitration Control Register
0182 0204	EMCIDMAARBE	EMC IDMA Arbitration Control Register
0182 0208	EMCSDMAARBE	EMC Slave DMA Arbitration Control Register
0182 020C	EMCMDMAARBE	EMC Master DMA Arbitration Control Register
0182 0210 - 0182 02FF	-	Reserved
0184 1000	L2DCPUARBU	L2D CPU Arbitration Control Register
0184 1004	L2DIDMAARBU	L2D IDMA Arbitration Control Register
0184 1008	L2DSDMAARBU	L2D Slave DMA Arbitration Control Register
0184 100C	L2DUCARBU	L2D User Coherence Arbitration Control Register
0184 1010 - 0184 103F	-	Reserved
0184 1040	L1DCPUARBD	L1D CPU Arbitration Control Register
0184 1044	L1DIDMAARBD	L1D IDMA Arbitration Control Register
0184 1048	L1DSDMAARBD	L1D Slave DMA Arbitration Control Register
0184 104C	L1DUCARBD	L1D User Coherence Arbitration Control Register
End of Table 5-13		

PRODUCT PREVIEW

PRODUCT PREVIEW

6 Device Operating Conditions

Based on JESD22-C101C (Field-Induced Charged-Device Model Test Method for Electrostatic-Discharge-Withstand Thresholds of Microelectronic Components), the TMS320C6457 device's charged-device model (CDM) sensitivity classification is Class II (200 V to < 500 V). Specifically, DDR memory interface and SerDes pins conform to ±200-V level. All other pins conform to ±500 V.

6.1 Absolute Maximum Ratings

Table 6-1 Absolute Maximum Ratings [1]
Over Operating Case Temperature Range (Unless Otherwise Noted)

Supply voltage range [2]:	CV_{DD}		-0.3 V to 1.35 V
	DV_{DD18}		-0.3 V to 2.45 V
	DV_{DD33}		-0.3 V to 3.60V
	$V_{REFSSTL}$		$0.49 \times DV_{DD18}$ to $0.51 \times DV_{DD18}$
	V_{DD11}, V_{DDD11}, V_{DDT11}		-0.3 V to 1.35 V
	V_{DDR18}		-0.3 V to 2.45 V
	AV_{DD118}, AV_{DD218}		-0.3 V to 2.45 V
	V_{SS} Ground		0 V
Input voltage (V_I) range:	LVCMOS (1.8V)		-0.3 V to DV_{DD18} + 0.3 V
	LVCMOS (3.3V)		-0.3 V to DV_{DD33} + 0.3 V
	DDR2		-0.3 V to 2.45 V
	I^2C		-0.3 V to 2.45 V
	LVDS		-0.3 V to D_{VDD18} + 0.3 V
	LJCB		-0.3 V to 1.35 V
	SerDes		-0.3 V to D_{VDD11} + 0.3 V
Output voltage (V_O) range:	LVCMOS (1.8V)		-0.3 V to DV_{DD18} + 0.3 V
	LVCMOS (3.3V)		-0.3 V to DV_{DD33} + 0.3 V
	DDR2		-0.3 V to 2.45 V
	I^2C		-0.3 V to 2.45 V
	SerDes		-0.3 V to DV_{DD11} + 0.3 V
Operating case temperature range, T_C:	Commercial	850 MHz CPU	0°C to 100°C
		1-GHz CPU	0°C to 100°C
		1.2-GHz CPU	0°C to 95°C
	Extended	1-GHz CPU	-40°C to 100°C
		1.2-GHz CPU	-40°C to 95°C
Overshoot/undershoot [3]	LVCMOS (1.8V)		20% Overshoot/Undershoot for 20% of Signal Duty Cycle
	LVCMOS (3.3V)		
	DDR2		
	I^2C		
Storage temperature range, T_{stg}:			-65°C to 150°C
End of Table 6-1			

1 Stresses beyond those listed under "absolute maximum ratings" may cause permanent damage to the device. These are stress ratings only, and functional operation of the device at these or any other conditions beyond those indicated under "recommended operating conditions" is not implied. Exposure to absolute-maximum-rated conditions for extended periods may affect device reliability.

2 All voltage values are with respect to V_{SS}.

3 Overshoot/Undershoot percentage relative to I/O operating values - for example the maximum overshoot value for 1.8-V LVCMOS signals is $DV_{DD18} + 0.20 \times DV_{DD18}$ and maximum undershoot value would be $V_{SS} - 0.20 \times DV_{DD18}$

PRODUCT PREVIEW

6.2 Recommended Operating Conditions

Table 6-2 Recommended Operating Conditions [1] [2]

				Min	Nom	Max	Unit
CV_{DD}	Supply core voltage		850-MHz CPU	1.067	1.1	1.133	V
			1-GHz CPU	1.067	1.1	1.133	
			1.2-GHz CPU	1.164	1.2	1.236	
DV_{DD18}	1.8-V supply I/O voltage			1.71	1.8	1.89	V
DV_{DD33}	3.3-V supply I/O voltage			3.135	3.3	3.465	V
$V_{REFSSTL}$	DDR2 reference voltage			$0.49 \times DV_{DD18}$	$0.5 \times DV_{DD18}$	$0.51 \times DV_{DD18}$	V
V_{DDR18}	SRIO/SGMII SerDes regulator supply			1.71	1.8	1.89	V
V_{DDA11}	SRIO/SGMII SerDes analog supply			1.045	1.1	1.155	V
V_{DDD11}	SRIO/SGMII SerDes digital supply			1.045	1.1	1.155	V
V_{DDT11}	SRIO/SGMII SerDes termination supply			1.045	1.1	1.155	V
$PLLV_1$	PLL1 analog supply			1.71	1.8	1.89	V
$PLLV_2$	PLL2 analog supply			1.71	1.8	1.89	V
V_{SS}	Ground			0	0	0	V
V_{IH}	High-level input voltage	LVCMOS (1.8 V)		$0.65 \times DV_{DD18}$			V
		LVCMOS (3.3 V)		2.0			V
		I^2C		$0.7 \times DV_{DD18}$			V
		DDR2 EMIF		$V_{REFSSTL} + 0.125$		$DV_{DD18} + 0.3$	V
V_{IL}	Low-level input voltage	LVCMOS (1.8 V)				$0.35 \times DV_{DD18}$	V
		LVCMOS (3.3 V)				0.8	V
		DDR2 EMIF		-0.3		$V_{REFSSTL} - 0.1$	V
		I^2C				$0.3 \times DV_{DD18}$	V
T_C	Operating case temperature	Commercial	850 MHz CPU	0		100	°C
			1-GHz CPU	0		100	
			1.2-GHz CPU	0		95	
		Extended	1-GHz CPU	-40		100	°C
			1.2-GHz CPU	-40		95	

End of Table 6-2

1 All differential clock inputs comply with the LVDS Electrical Specification, IEEE 1596.3-1996 and all SerDes I/Os comply with the XAUI Electrical Specification, IEEE 802.3ae-2002.

2 All SerDes I/Os comply with the XAUI Electrical Specification, IEEE 802.3ae-2002.

PRODUCT PREVIEW

2009 Texas Instruments Incorporated

6.3 Electrical Characteristics

Table 6-3 Electrical Characteristics
Over Recommended Ranges of Supply Voltage and Operating Case Temperature (Unless Otherwise Noted)

Parameter			Test Conditions [1]	Min	Typ	Max	Unit
V_{OH}	High-level output voltage	LVCMOS (1.8 V)	$I_O = I_{OH}$	DV_{DD18} - 0.45			V
		LVCMOS (3.3 V)	I_O = -2 mA	2.4			
		DDR2		1.4			
		I^2C		0.1 × DV_{DD18}			
V_{OL}	Low-level output voltage	LVCMOS (1.8 V)	$I_O = I_{OL}$			0.45	V
		LVCMOS (3.3 V)	I_O = 2 mA			0.4	
		DDR2				0.4	
		I^2C	I_O = 3 mA, pulled up to 1.8 V			0.4	
I_I [2]	Input current [DC]	LVCMOS (1.8 V)	No IPD/IPU	-5		5	µA
			Internal pullup	50	100	170	
			Internal pulldown	-170	-100	-50	
		LVCMOS (3.3 V)	No IPD/IPU	-1		1	µA
			Internal pullup	70	150	270	
			Internal pulldown	-270	-150	-70	
		I^2C	0.1 × DV_{DD18} V < V_I < 0.9 × DV_{DD18} V	-20		20	µA
I_{OH}	High-level output current [DC]	EMU[18:00], GPIO[15:0], TIMO[1:0]				-8	mA
		SYSCLKOUT, TDO, CLKR0, CLKX0, DX0, FSR0, FSX0, CLKR1, CLKX1, DX1, FSR1, FSX1, AECLKOUT				-6	
		$\overline{\text{RESETSTAT}}$, MDIO, MDCLK				-4	
		DDR2				4	
		LVCMOS (3.3 V), except AECLKOUT				-4	
I_{OL}	Low-level output current [DC]	EMU[18:00], GPIO[15:0], TIM[1:0]				8	mA
		SYSCLKOUT, TDO, CLKR0, CLKX0, DX0, FSR0, FSX0, CLKR1, CLKX1, DX1, FSR1, FSX1, AECLKOUT				6	
		$\overline{\text{RESETSTAT}}$, MDIO, MDCLK				4	
		DDR2				-4	
		LVCMOS (3.3 V), except AECLKOUT				4	
I_{OZ} [3]	Off-state output current [DC]	LVCMOS (1.8 V)		-20		20	µA
		LVCMOS (3.3 V)		-20		20	
End of Table 6-3							

1 For test conditions shown as MIN, MAX, or TYP, use the appropriate value specified in the recommended operating conditions table.

2 I_I applies to input-only pins and bi-directional pins. For input-only pins, I_I indicates the input leakage current. For bi-directional pins, I_I includes input leakage current and off-state (Hi-Z) output leakage current.

3 I_{OZ} applies to output-only pins, indicating off-state (Hi-Z) output leakage current.

PRODUCT PREVIEW

Table 6-4 Power Supply to Peripheral I/O Mapping (1) (2)
Over Recommended Ranges of Supply Voltage and Operating Case Temperature (Unless Otherwise Noted)2

Power Supply		I/O Buffer Type	Associated Peripheral
CV_{DD}	Supply core voltage	LJCB	CORECLK(P|N) PLL input buffers
			DDRREFCLK(N|P) PLL input buffers
			RIOSGMIICLK(N|P) SerDes PLL input buffers
DV_{DD18}	1.8-V supply I/O voltage	LVCMOS (1.8 V)	ALTCORECLK PLL input buffer
			ALTDDRCLK PLL input buffer
			POR/RESET input buffers
			All GPIO peripheral I/O buffer
			All McBSP0/McBSP1 peripheral I/O buffer
			All MDIO peripheral I/O buffer
			All Timer0/Timer1 peripheral I/O buffer
			NMI input buffers
		DDR2 (1.8V)	All DDR2 memory controller peripheral I/O buffer
		Open-drain (1.8 V)	All I^2C peripheral I/O buffer
DV_{DD33}	3.3-V supply I/O voltage	LVCMOS (3.3 V)	All EMIFA peripheral I/O buffer
			ALL HPI peripheral I/O buffer
			ALL UTOPIA peripheral I/O buffer
V_{DDA11}	SRIO/SGMII SerDes analog supply	CML	SRIO/SGMII SerDes CML I/O buffer
End of Table 6-4			

1 Please note that this table does not attempt to describe all functions of all power supply terminals but only those whose purpose it is to power peripheral I/O buffers and clock input buffers.
2 Please see the *TMS320TCI6484 and TMS320C6457 DSPs Hardware Design Guide* (SPRAAV7) for more information about individual peripheral I/O.

PRODUCT PREVIEW

2009 Texas Instruments Incorporated

7 C64x+ Peripheral Information and Electrical Specifications

This chapter describes the various peripherals on the TMS320C6457 DSP. Peripheral specific information, timing diagrams, electrical specifications and register memory maps are described in this chapter.

7.1 Parameter Information

This section describes the conditions used to capture the electrical data seen in this chapter.

Figure 7-1 Test Load Circuit for AC Timing Measurements

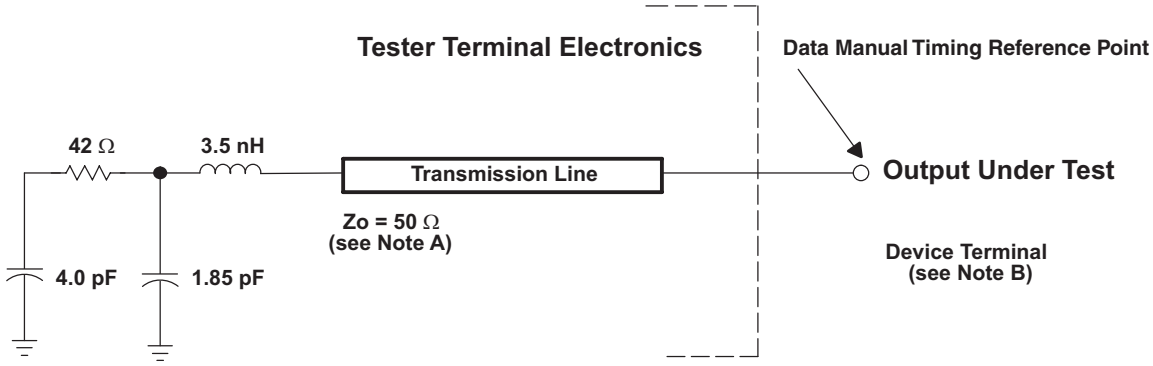

(A) The data manual provides timing at the device terminal. For output timing analysis, the tester terminal electronics and its transmission line effects must be taken into account. A transmission line with a delay of 2 ns can be used to produce the desired transmission line effect. The transmission line is intended as a load only. It is not necessary to add or subtract the transmission line delay (2 ns) from the data sheet timings.

(B) Input requirements in this data sheet are tested with an input slew rate of < 4 Volts per nanosecond (4 V/ns) at the device terminal.

The load capacitance value stated is only for characterization and measurement of AC timing signals. This load capacitance value does not indicate the maximum load the device is capable of driving.

7.1.1 1.8-V Signal Transition Levels

All input and output timing parameters are referenced to 0.9 V for both 0 and 1 logic levels.

Figure 7-2 Input and Output Voltage Reference Levels for 1.8-V AC Timing Measurements

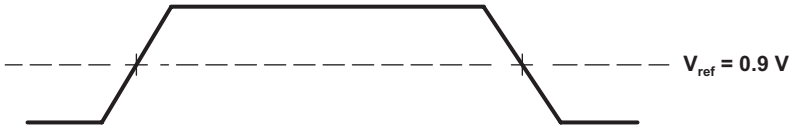

All rise and fall transition timing parameters are reference to V_{IL} MAX and V_{IH} MIN for input clocks.

Figure 7-3 Rise and Fall Transition Time Voltage Reference Levels

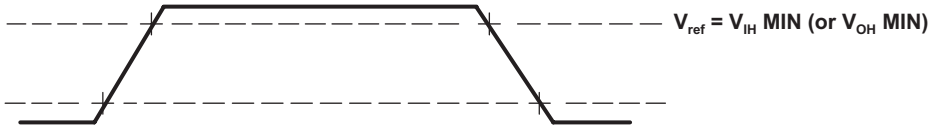

PRODUCT PREVIEW

PRODUCT PREVIEW

7.1.2 3.3-V Signal Transition Levels

All input and output timing parameters are referenced to 1.5 V for both 0 and 1 logic levels.

Figure 7-4 Input and Output Voltage Reference Levels for 3.3-V AC Timing Measurements

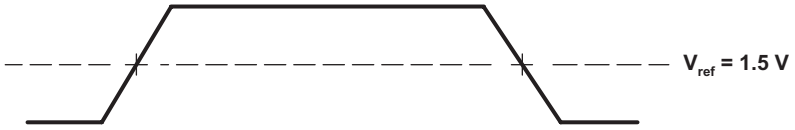

All rise and fall transition timing parameters are referenced to V_{IL} MAX and V_{IH} MIN for input clocks, V_{OL} MAX and V_{OH} MIN for output clocks.

Figure 7-5 Rise and Fall Transition Time Voltage Reference Levels

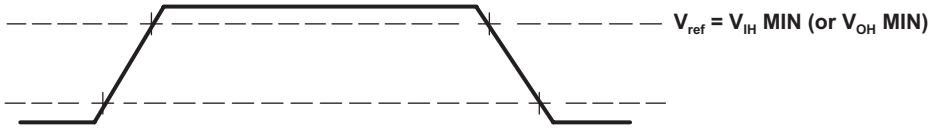

7.1.3 3.3-V Signal Transition Rates

All timings are tested with an input edge rate of 4 volts per nanosecond (4 V/ns).

7.1.4 Timing Parameters and Board Routing Analysis

The timing parameter values specified in this data sheet do not include delays by board routings. As a good board design practice, such delays must always be taken into account. Timing values may be adjusted by increasing/decreasing such delays. TI recommends using the available I/O buffer information specification (IBIS) models to analyze the timing characteristics correctly. To properly use IBIS models to attain accurate timing analysis for a given system, see the *Using IBIS Models for Timing Analysis* application report (literature number SPRA839). If needed, external logic hardware such as buffers may be used to compensate any timing differences.

For inputs, timing is most impacted by the round-trip propagation delay from the DSP to the external device and from the external device to the DSP. This round-trip delay tends to negatively impact the input setup time margin, but also tends to improve the input hold time margins (see Table 7-1 and Figure 7-6).

Table 7-1 Board-Level Timing Example
(see Figure 7-6)

No.	Description
1	Clock route delay
2	Minimum DSP hold time
3	Minimum DSP setup time
4	External device hold time requirement
5	External device setup time requirement
6	Control signal route delay
7	External device hold time
8	External device access time
9	DSP hold time requirement
10	DSP setup time requirement
11	Data route delay
End of Table 7-1	

 2009 Texas Instruments Incorporated

Figure 7-6 shows a general transfer between the DSP and an external device. The figure also shows board route delays and how they are perceived by the DSP and the external device

Figure 7-6 Board-Level Input/Output Timings

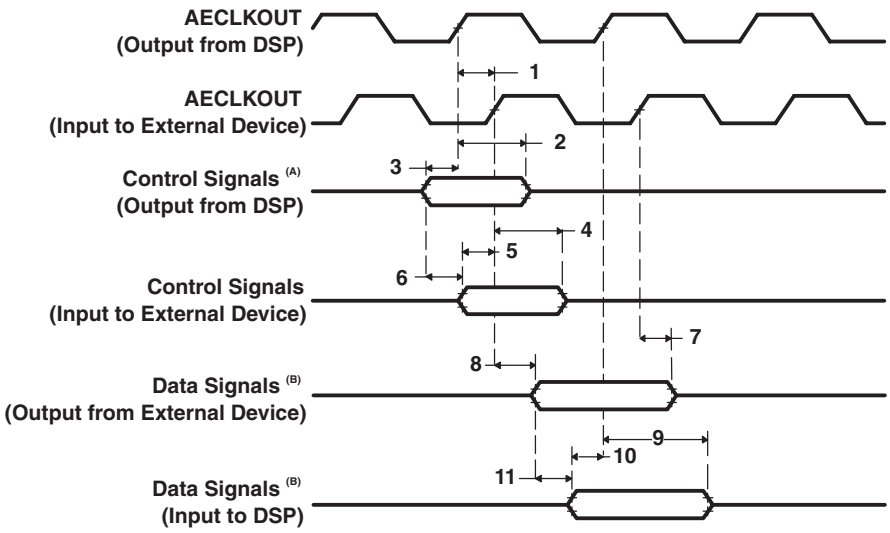

(A) Control signals include data for writes.
(B) Data signals are generated during reads from an external device.

7.2 Recommended Clock and Control Signal Transition Behavior

All clocks and control signals ***must*** transition between V_{IH} and V_{IL} (or between V_{IL} and V_{IH}) in a monotonic manner.

7.3 Power Supplies

The following sections describe the proper power-supply sequencing and timing needed to properly power on the C6457 DSP. This section also describes proper power-supply decoupling methods.

PRODUCT PREVIEW

PRODUCT PREVIEW

7.3.1 Power-Supply Sequencing

TI recommends the power-supply sequence shown in Figure 7-7 and described in Table 7-2. The figure shows that the 1.8-V I/O supply should be ramped first. This is followed by the scaled core supply and the fixed 1.1-V supplies which must ramp within 5 ms of each other. The 3.3-V I/O supply should ramp up last. Some TI power-supply devices include features that facilitate power sequencing; for example, Auto-Track or Slow-Start/Enable features. For more information, visit www.ti.com/dsppower. See the *TMS320TCI6468 and TMS329C6457 DSPs Hardware Design Guide* (SPRAAV7) for further details on proper power-supply sequencing.

Figure 7-7 Power-Supply Sequence

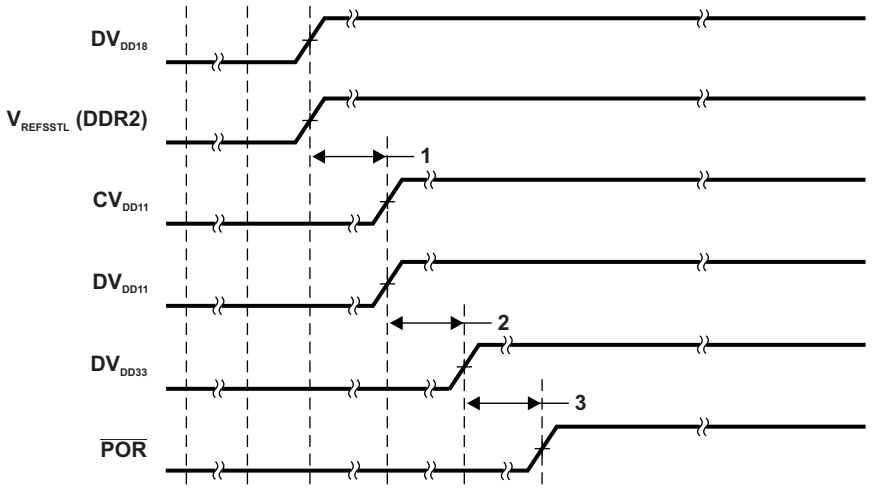

Table 7-2 Timing Requirements for Power-Supply Sequence

No.			Min	Max	Unit
1	$t_{su(DVDD18\text{-}DVDD11)}$	Setup Time, DV_{DD18} and $V_{REFSSTL}$ supplies stable before DV_{DD11} and CV_{DD11} supplies stable	0.5	200	ms
2	$t_{su(DVDD11\text{-}DVDD33)}$	Setup Time, DV_{DD11} and CV_{DD11} supplies stable before DV_{DD33} supply stable	0.5	200	ms
3	$t_{h(DVDD33\text{-}\overline{POR})}$	Hold time, $\overline{POR}$ low after DV_{DD33} supplies stable	100		µs
End of Table 7-2					

7.3.2 Power-Supply Decoupling

In order to properly decouple the supply planes from system noise, place as many capacitors (caps) as possible close to the DSP. These caps need to be close to the DSP, no more than 1.25 cm maximum distance to be effective. Physically smaller caps are better, such as 0402, but need to be evaluated from a yield/manufacturing point-of-view. Parasitic inductance limits the effectiveness of the decoupling capacitors, therefore physically smaller capacitors should be used while maintaining the largest available capacitance value. As with the selection of any component, verification of capacitor availability over the product's production lifetime should be considered.

7.3.3 Power-Down Operation

One of the power goals for the C6457 is to reduce power dissipation due to unused peripherals. There are different ways to power down peripherals on the device.

After device reset, all peripherals on the C6457 device are in a disabled state and must be enabled by software before being used. It is possible to enable only the peripherals needed by the application while keeping the rest disabled. Note that peripherals in a disabled state are held in reset with their clocks gated. For more information on how to enable peripherals, see Section 3.2 "Peripheral Selection After Device Reset" on page 60

 2009 Texas Instruments Incorporated

Peripherals used for booting, like I^2C and HPI, are automatically enabled after device reset. It is possible to disable peripherals used for booting after the boot process is complete. This, too, results in gating of the clock(s) to the powered-down peripheral. Once a peripheral is powered-down, it must remain powered down until the next device reset.

The C64x+ Megamodule also allows for software-driven power-down management for all of the C64x+ megamodule components through its Power-Down Controller (PDC). The CPU can power-down part or the entire C64x+ megamodule through the power-down controller based on its own execution thread or in response to an external stimulus from a host or global controller. More information on the power-down features of the C64x+ Megamodule can be found in the *TMS320C64x+ Megamodule Reference Guide* (literature number SPRU871).

7.4 Enhanced Direct Memory Access (EDMA3) Controller

The primary purpose of the EDMA3 is to service user-programmed data transfers between two memory-mapped slave endpoints on the device. The EDMA3 services software-driven paging transfers (e.g., data movement between external memory and internal memory), performs sorting or subframe extraction of various data structures, services event-driven peripherals such as a McBSP or the UTOPIA port, and offloads data transfers from the device CPU.

The EDMA3 includes the following features:

- Fully orthogonal transfer description
  - 3 transfer dimensions:
    - Array (multiple bytes)
    - Frame (multiple arrays)
    - Block (multiple frames)
  - Single event can trigger transfer of array, frame, or entire block
  - Independent indexes on source and destination
- Flexible transfer definition:
  - Increment or FIFO transfer addressing modes
  - Linking mechanism allows for ping-pong buffering, circular buffering, and repetitive/continuous transfers, all with no CPU intervention
  - Chaining allows multiple transfers to execute with one event
- 256 PaRAM entries
  - Used to define transfer context for channels
  - Each PaRAM entry can be used as a DMA entry, QDMA entry, or link entry
- 64 DMA channels
  - Manually triggered (CPU writes to channel controller register), external event triggered, and chain triggered (completion of one transfer triggers another)
- 8 Quick DMA (QDMA) channels
  - Used for software-driven transfers
  - Triggered upon writing to a single PaRAM set entry
- 6 transfer controllers and 6 event queues with programmable system-level priority
- Interrupt generation for transfer completion and error conditions
- Debug visibility
  - Queue watermarking/threshold allows detection of maximum usage of event queues
  - Error and status recording to facilitate debug

Each of the transfer controllers has a direct connection to the switched central resource (SCR). Table 4-1 "SCR Connection Matrix" on page 67 lists the peripherals that can be accessed by the transfer controllers.

PRODUCT PREVIEW

PRODUCT PREVIEW

7.4.1 EDMA3 Device-Specific Information

The EDMA supports two addressing modes: constant addressing and increment addressing mode. Constant addressing mode is applicable to a very limited set of use cases; for most applications increment mode can be used. On the C6457 DSP, the EDMA can use constant addressing mode only with the Enhanced Viterbi-Decoder Coprocessor (VCP2) and the Enhanced Turbo Decoder Coprocessor (TCP2). Constant addressing mode is not supported by any other peripheral or internal memory in the C6457 DSP. Note that increment mode is supported by all C6457 peripherals, including VCP2 and TCP2. For more information on these two addressing modes, see the *TMS320C6457 DSP Enhanced DMA (EDMA3) Controller User's Guide* (literature number SPRUGK6).

A DSP interrupt must be generated at the end of an HPI boot operation to begin execution of the loaded application. Because the DSP interrupt generated by the HPI is mapped to the EDMA event DSP_EVT (DMA channel 0), it will get recorded in bit 0 of the EDMA Event Register (ER). This event must be cleared by software before triggering transfers on DMA channel 0. The EDMA3 on the C6457 DSP supports active memory protection, but it does not support proxied memory protection.

7.4.2 EDMA3 Channel Synchronization Events

The EDMA3 supports up to 64 DMA channels that can be used to service system peripherals and to move data between system memories. DMA channels can be triggered by synchronization events generated by system peripherals. Table 7-3 lists the source of the synchronization event associated with each of the DMA channels. On the C6457, the association of each synchronization event and DMA channel is fixed and cannot be reprogrammed.

For more detailed information on the EDMA3 module and how EDMA3 events are enabled, captured, processed, prioritized, linked, chained, and cleared, etc., see the *TMS320C6457 DSP Enhanced DMA (EDMA3) Controller User's Guide* (literature number SPRUGK6).

Table 7-3 C6457 EDMA3 Channel Synchronization Events (1) (Part 1 of 2)

EDMA Channel	Event Name	Event Description
0 (2)	DSP_EVT	HPI-to-DSP event
1	TEVTLO0	Timer 0 Lower Counter Event
2	TEVTHI0	Timer 0 High Counter Event
3 - 8	-	None
9	ETBHFULLINT	Embedded Trace Buffer (ETB) is half full
10	ETBFULLINT	Embedded Trace Buffer (ETB) is full
11	ETBACQINT	Embedded Trace Buffer (ETB) acquisition is complete
12	XEVT0	McBSP0 Transmit Event
13	REVT0	McBSP0 Receive Event
14	XEVT1	McBSP1 Transmit Event
15	REVT1	McBSP1 Receive Event
16	TEVTLO1	Timer 1 Lower Counter Event
17	TEVTHI1	Timer 1 High Counter Event
18	-	None
19	INTDST0	RapidIO Interrupt 0
20	INTDST1	RapidIO Interrupt 1
21	INTDST2	RapidIO Interrupt 2
22	INTDST3	RapidIO Interrupt 3
23	INTDST4	RapidIO Interrupt 4
24	INTDST5	RapidIO Interrupt 5
25	INTDST6	RapidIO Interrupt 6
26 - 27	-	None

Table 7-3 C6457 EDMA3 Channel Synchronization Events (1) (Part 2 of 2)

EDMA Channel	Event Name	Event Description
28	VCP2REVT	VCP2 Receive Event
29	VCP2XEVT	VCP2 Transmit Event
30	TCP2AREVT	TCP2_A Receive Event
31	TCP2AXEVT	TCP2_A Transmit Event
32	UREVT	UTOPIA Receive Event
33	TCP2BREVT	TCP2_B Receive Event
34	TCP2BXEVT	TCP2_B Transmit Event
35 - 39	-	None
40	UXEVT	UTOPIA Transmit Event
41 - 43	-	None
44	ICREVT	I^2C Receive Event
45	ICXEVT	I^2C Transmit Event
46 - 47	-	None
48	GPINT0	GPIO event 0
49	GPINT1	GPIO event 1
50	GPINT2	GPIO event 2
51	GPINT3	GPIO event 3
52	GPINT4	GPIO event 4
53	GPINT5	GPIO event 5
54	GPINT6	GPIO event 6
55	GPINT7	GPIO event 7
56	GPINT8	GPIO event 8
57	GPINT9	GPIO event 9
58	GPINT10	GPIO event 10
59	GPINT11	GPIO event 11
60	GPINT12	GPIO event 12
61	GPINT13	GPIO event 13
62	GPINT14	GPIO event 14
63	GPINT15	GPIO event 15
End of Table 7-3		

1 In addition to the events shown in this table, each of the 64 channels can also be synchronized with the transfer completion or alternate transfer completion events. For more detailed information on EDMA event-transfer chaining, see the *TMS320C6457 DSP Enhanced DMA (EDMA3) Controller User's Guide* (literature number SPRUGK6).

2 HPI boot is terminated using a DSP interrupt. The DSP interrupt is registered in bit 0 (channel 0) of the EDMA Event Register (ER). This event must be cleared by software before triggering transfers on DMA channel 0.

7.4.3 EDMA3 Peripheral Register Description(s)

Table 7-4 EDMA3 Registers (Part 1 of 15)

Hex Address	Acronym	Register Name
02A0 0000	PID	Peripheral ID Register
02A0 0004	CCCFG	EDMA3CC Configuration Register
02A0 0008 - 02A0 00FC	-	Reserved
02A0 0100	DCHMAP0	DMA Channel 0 Mapping Register
02A0 0104	DCHMAP1	DMA Channel 1 Mapping Register
02A0 0108	DCHMAP2	DMA Channel 2 Mapping Register

PRODUCT PREVIEW

Table 7-4 EDMA3 Registers (Part 2 of 15)

Hex Address	Acronym	Register Name
02A0 010C	DCHMAP3	DMA Channel 3 Mapping Register
02A0 0110	DCHMAP4	DMA Channel 4 Mapping Register
02A0 0114	DCHMAP5	DMA Channel 5 Mapping Register
02A0 0118	DCHMAP6	DMA Channel 6 Mapping Register
02A0 011C	DCHMAP7	DMA Channel 7 Mapping Register
02A0 0120	DCHMAP8	DMA Channel 8 Mapping Register
02A0 0124	DCHMAP9	DMA Channel 9 Mapping Register
02A0 0128	DCHMAP10	DMA Channel 10 Mapping Register
02A0 012C	DCHMAP11	DMA Channel 11 Mapping Register
02A0 0130	DCHMAP12	DMA Channel 12 Mapping Register
02A0 0134	DCHMAP13	DMA Channel 13 Mapping Register
02A0 0138	DCHMAP14	DMA Channel 14 Mapping Register
02A0 013C	DCHMAP15	DMA Channel 15 Mapping Register
02A0 0140	DCHMAP16	DMA Channel 16 Mapping Register
02A0 0144	DCHMAP17	DMA Channel 17 Mapping Register
02A0 0148	DCHMAP18	DMA Channel 18 Mapping Register
02A0 014C	DCHMAP19	DMA Channel 19 Mapping Register
02A0 0150	DCHMAP20	DMA Channel 20 Mapping Register
02A0 0154	DCHMAP21	DMA Channel 21 Mapping Register
02A0 0158	DCHMAP22	DMA Channel 22 Mapping Register
02A0 015C	DCHMAP23	DMA Channel 23 Mapping Register
02A0 0160	DCHMAP24	DMA Channel 24 Mapping Register
02A0 0164	DCHMAP25	DMA Channel 25 Mapping Register
02A0 0168	DCHMAP26	DMA Channel 26 Mapping Register
02A0 016C	DCHMAP27	DMA Channel 27 Mapping Register
02A0 0170	DCHMAP28	DMA Channel 28 Mapping Register
02A0 0174	DCHMAP29	DMA Channel 29 Mapping Register
02A0 0178	DCHMAP30	DMA Channel 30 Mapping Register
02A0 017C	DCHMAP31	DMA Channel 31 Mapping Register
02A0 0180	DCHMAP32	DMA Channel 32 Mapping Register
02A0 0184	DCHMAP33	DMA Channel 33 Mapping Register
02A0 0188	DCHMAP34	DMA Channel 34 Mapping Register
02A0 018C	DCHMAP35	DMA Channel 35 Mapping Register
02A0 0190	DCHMAP36	DMA Channel 36 Mapping Register
02A0 0194	DCHMAP37	DMA Channel 37 Mapping Register
02A0 0198	DCHMAP38	DMA Channel 38 Mapping Register
02A0 019C	DCHMAP39	DMA Channel 39 Mapping Register
02A0 01A0	DCHMAP40	DMA Channel 40 Mapping Register
02A0 01A4	DCHMAP41	DMA Channel 41 Mapping Register
02A0 01A8	DCHMAP42	DMA Channel 42 Mapping Register
02A0 01AC	DCHMAP43	DMA Channel 43 Mapping Register
02A0 01B0	DCHMAP44	DMA Channel 44 Mapping Register
02A0 01B4	DCHMAP45	DMA Channel 45 Mapping Register
02A0 01B8	DCHMAP46	DMA Channel 46 Mapping Register

PRODUCT PREVIEW

Table 7-4 EDMA3 Registers (Part 3 of 15)

Hex Address	Acronym	Register Name
02A0 01BC	DCHMAP47	DMA Channel 47 Mapping Register
02A0 01C0	DCHMAP48	DMA Channel 48 Mapping Register
02A0 01C4	DCHMAP49	DMA Channel 49 Mapping Register
02A0 01C8	DCHMAP50	DMA Channel 50 Mapping Register
02A0 01CC	DCHMAP51	DMA Channel 51 Mapping Register
02A0 01D0	DCHMAP52	DMA Channel 52 Mapping Register
02A0 01D4	DCHMAP53	DMA Channel 53 Mapping Register
02A0 01D8	DCHMAP54	DMA Channel 54 Mapping Register
02A0 01DC	DCHMAP55	DMA Channel 55 Mapping Register
02A0 01E0	DCHMAP56	DMA Channel 56 Mapping Register
02A0 01E4	DCHMAP57	DMA Channel 57 Mapping Register
02A0 01E8	DCHMAP58	DMA Channel 58 Mapping Register
02A0 01EC	DCHMAP59	DMA Channel 59 Mapping Register
02A0 01F0	DCHMAP60	DMA Channel 60 Mapping Register
02A0 01F4	DCHMAP61	DMA Channel 61 Mapping Register
02A0 01F8	DCHMAP62	DMA Channel 62 Mapping Register
02A0 01FC	DCHMAP63	DMA Channel 63 Mapping Register
02A0 0200	QCHMAP0	QDMA Channel 0 Mapping Register
02A0 0204	QCHMAP1	QDMA Channel 1 Mapping Register
02A0 0208	QCHMAP2	QDMA Channel 2 Mapping Register
02A0 020C	QCHMAP3	QDMA Channel 3 Mapping Register
02A0 0210	QCHMAP4	QDMA Channel 4 Mapping Register
02A0 0214	QCHMAP5	QDMA Channel 5 Mapping Register
02A0 0218	QCHMAP6	QDMA Channel 6 Mapping Register
02A0 021C	QCHMAP7	QDMA Channel 7 Mapping Register
02A0 0220 - 02A0 023C	-	Reserved
02A0 0240	DMAQNUM0	DMA Queue Number Register 0
02A0 0244	DMAQNUM1	DMA Queue Number Register 1
02A0 0248	DMAQNUM2	DMA Queue Number Register 2
02A0 024C	DMAQNUM3	DMA Queue Number Register 3
02A0 0250	DMAQNUM4	DMA Queue Number Register 4
02A0 0254	DMAQNUM5	DMA Queue Number Register 5
02A0 0258	DMAQNUM6	DMA Queue Number Register 6
02A0 025C	DMAQNUM7	DMA Queue Number Register 7
02A0 0260	QDMAQNUM	QDMA Queue Number Register
02A0 0264 - 02A0 027C	-	Reserved
02A0 0280	QUETCMAP	Queue to TC Mapping Register
02A0 0284	QUEPRI	Queue Priority Register
02A0 0288 - 02A0 02FC	-	Reserved
02A0 0300	EMR	Event Missed Register
02A0 0304	EMRH	Event Missed Register High
02A0 0308	EMCR	Event Missed Clear Register
02A0 030C	EMCRH	Event Missed Clear Register High
02A0 0310	QEMR	QDMA Event Missed Register

PRODUCT PREVIEW

Table 7-4 EDMA3 Registers (Part 4 of 15)

Hex Address	Acronym	Register Name
02A0 0314	QEMCR	QDMA Event Missed Clear Register
02A0 0318	CCERR	EDMA3CC Error Register
02A0 031C	CCERRCLR	EDMA3CC Error Clear Register
02A0 0320	EEVAL	Error Evaluate Register
02A0 0324 - 02A0 033C	-	Reserved
02A0 0340	DRAE0	DMA Region Access Enable Register for Region 0
02A0 0344	DRAEH0	DMA Region Access Enable Register High for Region 0
02A0 0348	DRAE1	DMA Region Access Enable Register for Region 1
02A0 034C	DRAEH1	DMA Region Access Enable Register High for Region 1
02A0 0350	DRAE2	DMA Region Access Enable Register for Region 2
02A0 0354	DRAEH2	DMA Region Access Enable Register High for Region 2
02A0 0358	DRAE3	DMA Region Access Enable Register for Region 3
02A0 035C	DRAEH3	DMA Region Access Enable Register High for Region 3
02A0 0360	DRAE4	DMA Region Access Enable Register for Region 4
02A0 0364	DRAEH4	DMA Region Access Enable Register High for Region 4
02A0 0368	DRAE5	DMA Region Access Enable Register for Region 5
02A0 036C	DRAEH5	DMA Region Access Enable Register High for Region 5
02A0 0370	DRAE6	DMA Region Access Enable Register for Region 6
02A0 0374	DRAEH6	DMA Region Access Enable Register High for Region 6
02A0 0378	DRAE7	DMA Region Access Enable Register for Region 7
02A0 037C	DRAEH7	DMA Region Access Enable Register High for Region 7
02A0 0380	QRAE0	QDMA Region Access Enable Register for Region 0
02A0 0384	QRAE1	QDMA Region Access Enable Register for Region 1
02A0 0388	QRAE2	QDMA Region Access Enable Register for Region 2
02A0 038C	QRAE3	QDMA Region Access Enable Register for Region 3
02A0 0390	QRAE4	QDMA Region Access Enable Register for Region 4
02A0 0394	QRAE5	QDMA Region Access Enable Register for Region 5
02A0 0398	QRAE6	QDMA Region Access Enable Register for Region 6
02A0 039C	QRAE7	QDMA Region Access Enable Register for Region 7
02A0 0400	Q0E0	Event Queue 0 Entry Register 0
02A0 0404	Q0E1	Event Queue 0 Entry Register 1
02A0 0408	Q0E2	Event Queue 0 Entry Register 2
02A0 040C	Q0E3	Event Queue 0 Entry Register 3
02A0 0410	Q0E4	Event Queue 0 Entry Register 4
02A0 0414	Q0E5	Event Queue 0 Entry Register 5
02A0 0418	Q0E6	Event Queue 0 Entry Register 6
02A0 041C	Q0E7	Event Queue 0 Entry Register 7
02A0 0420	Q0E8	Event Queue 0 Entry Register 8
02A0 0424	Q0E9	Event Queue 0 Entry Register 9
02A0 0428	Q0E10	Event Queue 0 Entry Register 10
02A0 042C	Q0E11	Event Queue 0 Entry Register 11
02A0 0430	Q0E12	Event Queue 0 Entry Register 12
02A0 0434	Q0E13	Event Queue 0 Entry Register 13
02A0 0438	Q0E14	Event Queue 0 Entry Register 14

PRODUCT PREVIEW

Table 7-4 EDMA3 Registers (Part 5 of 15)

Hex Address	Acronym	Register Name
02A0 043C	Q0E15	Event Queue 0 Entry Register 15
02A0 0440	Q1E0	Event Queue 1 Entry Register 0
02A0 0444	Q1E1	Event Queue 1 Entry Register 1
02A0 0448	Q1E2	Event Queue 1 Entry Register 2
02A0 044C	Q1E3	Event Queue 1 Entry Register 3
02A0 0450	Q1E4	Event Queue 1 Entry Register 4
02A0 0454	Q1E5	Event Queue 1 Entry Register 5
02A0 0458	Q1E6	Event Queue 1 Entry Register 6
02A0 045C	Q1E7	Event Queue 1 Entry Register 7
02A0 0460	Q1E8	Event Queue 1 Entry Register 8
02A0 0464	Q1E9	Event Queue 1 Entry Register 9
02A0 0468	Q1E10	Event Queue 1 Entry Register 10
02A0 046C	Q1E11	Event Queue 1 Entry Register 11
02A0 0470	Q1E12	Event Queue 1 Entry Register 12
02A0 0474	Q1E13	Event Queue 1 Entry Register 13
02A0 0478	Q1E14	Event Queue 1 Entry Register 14
02A0 047C	Q1E15	Event Queue 1 Entry Register 15
02A0 0480	Q2E0	Event Queue 2 Entry Register 0
02A0 0484	Q2E1	Event Queue 2 Entry Register 1
02A0 0488	Q2E2	Event Queue 2 Entry Register 2
02A0 048C	Q2E3	Event Queue 2 Entry Register 3
02A0 0490	Q2E4	Event Queue 2 Entry Register 4
02A0 0494	Q2E5	Event Queue 2 Entry Register 5
02A0 0498	Q2E6	Event Queue 2 Entry Register 6
02A0 049C	Q2E7	Event Queue 2 Entry Register 7
02A0 04A0	Q2E8	Event Queue 2 Entry Register 8
02A0 04A4	Q2E9	Event Queue 2 Entry Register 9
02A0 04A8	Q2E10	Event Queue 2 Entry Register 10
02A0 04AC	Q2E11	Event Queue 2 Entry Register 11
02A0 04B0	Q2E12	Event Queue 2 Entry Register 12
02A0 04B4	Q2E13	Event Queue 2 Entry Register 13
02A0 04B8	Q2E14	Event Queue 2 Entry Register 14
02A0 04BC	Q2E15	Event Queue 2 Entry Register 15
02A0 04C0	Q3E0	Event Queue 3 Entry Register 0
02A0 04C4	Q3E1	Event Queue 3 Entry Register 1
02A0 04C8	Q3E2	Event Queue 3 Entry Register 2
02A0 04CC	Q3E3	Event Queue 3 Entry Register 3
02A0 04D0	Q3E4	Event Queue 3 Entry Register 4
02A0 04D4	Q3E5	Event Queue 3 Entry Register 5
02A0 04D8	Q3E6	Event Queue 3 Entry Register 6
02A0 04DC	Q3E7	Event Queue 3 Entry Register 7
02A0 04E0	Q3E8	Event Queue 3 Entry Register 8
02A0 04E4	Q3E9	Event Queue 3 Entry Register 9
02A0 04E8	Q3E10	Event Queue 3 Entry Register 10

PRODUCT PREVIEW

Table 7-4 EDMA3 Registers (Part 6 of 15)

Hex Address	Acronym	Register Name
02A0 04EC	Q3E11	Event Queue 3 Entry Register 11
02A0 04F0	Q3E12	Event Queue 3 Entry Register 12
02A0 04F4	Q3E13	Event Queue 3 Entry Register 13
02A0 04F8	Q3E14	Event Queue 3 Entry Register 14
02A0 04FC	Q3E15	Event Queue 3 Entry Register 15
02A0 0500	Q4E0	Event Queue 4 Entry Register 0
02A0 0504	Q4E1	Event Queue 4 Entry Register 1
02A0 0508	Q4E2	Event Queue 4 Entry Register 2
02A0 050C	Q4E3	Event Queue 4 Entry Register 3
02A0 0510	Q4E4	Event Queue 4 Entry Register 4
02A0 0514	Q4E5	Event Queue 4 Entry Register 5
02A0 0518	Q4E6	Event Queue 4 Entry Register 6
02A0 051C	Q4E7	Event Queue 4 Entry Register 7
02A0 0520	Q4E8	Event Queue 4 Entry Register 8
02A0 0524	Q4E9	Event Queue 4 Entry Register 9
02A0 0528	Q4E10	Event Queue 4 Entry Register 10
02A0 052C	Q4E11	Event Queue 4 Entry Register 11
02A0 0530	Q4E12	Event Queue 4 Entry Register 12
02A0 0534	Q4E13	Event Queue 4 Entry Register 13
02A0 0538	Q4E14	Event Queue 4 Entry Register 14
02A0 053C	Q4E15	Event Queue 4 Entry Register 15
02A0 0540 - 02A0 05FC	-	Reserved
02A0 0600	QSTAT0	Queue Status Register 0
02A0 0604	QSTAT1	Queue Status Register 1
02A0 0608	QSTAT2	Queue Status Register 2
02A0 060C	QSTAT3	Queue Status Register 3
02A0 0610	QSTAT4	Queue Status Register 4
02A0 0614	QSTAT5	Queue Status Register 5
02A0 0618 - 02A0 061C	-	Reserved
02A0 0620	QWMTHRA	Queue Watermark Threshold A Register
02A0 0624	QWMTHRB	Queue Watermark Threshold B Register
02A0 0628 - 02A0 063C	-	Reserved
02A0 0640	CCSTAT	EDMA3CC Status Register
02A0 0644 - 02A0 06FC	-	Reserved
02A0 0700 - 02A0 07FC	-	Reserved
02A0 0800	MPFAR	Memory Protection Fault Address Register
02A0 0804	MPFSR	Memory Protection Fault Status Register
02A0 0808	MPFCR	Memory Protection Fault Command Register
02A0 080C	MPPAG	Memory Protection Page Attribute Register G
02A0 0810	MPPA0	Memory Protection Page Attribute Register 0
02A0 0814	MPPA1	Memory Protection Page Attribute Register 1
02A0 0818	MPPA2	Memory Protection Page Attribute Register 2
02A0 081C	MPPA3	Memory Protection Page Attribute Register 3
02A0 0820	MPPA4	Memory Protection Page Attribute Register 4

PRODUCT PREVIEW

Table 7-4 EDMA3 Registers (Part 7 of 15)

Hex Address	Acronym	Register Name
02A0 0824	MPPA5	Memory Protection Page Attribute Register 5
02A0 0828	MPPA6	Memory Protection Page Attribute Register 6
02A0 082C	MPPA7	Memory Protection Page Attribute Register 7
02A0 082C - 02A0 0FFC	-	Reserved
02A0 1000	ER	Event Register
02A0 1004	ERH	Event Register High
02A0 1008	ECR	Event Clear Register
02A0 100C	ECRH	Event Clear Register High
02A0 1010	ESR	Event Set Register
02A0 1014	ESRH	Event Set Register High
02A0 1018	CER	Chained Event Register
02A0 101C	CERH	Chained Event Register High
02A0 1020	EER	Event Enable Register
02A0 1024	EERH	Event Enable Register High
02A0 1028	EECR	Event Enable Clear Register
02A0 102C	EECRH	Event Enable Clear Register High
02A0 1030	EESR	Event Enable Set Register
02A0 1034	EESRH	Event Enable Set Register High
02A0 1038	SER	Secondary Event Register
02A0 103C	SERH	Secondary Event Register High
02A0 1040	SECR	Secondary Event Clear Register
02A0 1044	SECRH	Secondary Event Clear Register High
02A0 1048 - 02A0 104C	-	Reserved
02A0 1050	IER	Interrupt Enable Register
02A0 1054	IERH	Interrupt Enable High Register
02A0 1058	IECR	Interrupt Enable Clear Register
02A0 105C	IECRH	Interrupt Enable Clear High Register
02A0 1060	IESR	Interrupt Enable Set Register
02A0 1064	IESRH	Interrupt Enable Set High Register
02A0 1068	IPR	Interrupt Pending Register
02A0 106C	IPRH	Interrupt Pending High Register
02A0 1070	ICR	Interrupt Clear Register
02A0 1074	ICRH	Interrupt Clear High Register
02A0 1078	IEVAL	Interrupt Evaluate Register
02A0 107C	-	Reserved
02A0 1080	QER	QDMA Event Register
02A0 1084	QEER	QDMA Event Enable Register
02A0 1088	QEECR	QDMA Event Enable Clear Register
02A0 108C	QEESR	QDMA Event Enable Set Register
02A0 1090	QSER	QDMA Secondary Event Register
02A0 1094	QSECR	QDMA Secondary Event Clear Register
02A0 1098 - 02A0 1FFF	-	Reserved
Shadow Region 0 Channel Registers		
02A0 2000	ER	Event Register

PRODUCT PREVIEW

Table 7-4 EDMA3 Registers (Part 8 of 15)

Hex Address	Acronym	Register Name
02A0 2004	ERH	Event Register High
02A0 2008	ECR	Event Clear Register
02A0 200C	ECRH	Event Clear Register High
02A0 2010	ESR	Event Set Register
02A0 2014	ESRH	Event Set Register High
02A0 2018	CER	Chained Event Register
02A0 201C	CERH	Chained Event Register High
02A0 2020	EER	Event Enable Register
02A0 2024	EERH	Event Enable Register High
02A0 2028	EECR	Event Enable Clear Register
02A0 202C	EECRH	Event Enable Clear Register High
02A0 2030	EESR	Event Enable Set Register
02A0 2034	EESRH	Event Enable Set Register High
02A0 2038	SER	Secondary Event Register
02A0 203C	SERH	Secondary Event Register High
02A0 2040	SECR	Secondary Event Clear Register
02A0 2044	SECRH	Secondary Event Clear Register High
02A0 2048 - 02A0 204C	-	Reserved
02A0 2050	IER	Interrupt Enable Register
02A0 2054	IERH	Interrupt Enable Register High
02A0 2058	IECR	Interrupt Enable Clear Register
02A0 205C	IECRH	Interrupt Enable Clear Register High
02A0 2060	IESR	Interrupt Enable Set Register
02A0 2064	IESRH	Interrupt Enable Set Register High
02A0 2068	IPR	Interrupt Pending Register
02A0 206C	IPRH	Interrupt Pending Register High
02A0 2070	ICR	Interrupt Clear Register
02A0 2074	ICRH	Interrupt Clear Register High
02A0 2078	IEVAL	Interrupt Evaluate Register
02A0 207C	-	Reserved
02A0 2080	QER	QDMA Event Register
02A0 2084	QEER	QDMA Event Enable Register
02A0 2088	QEECR	QDMA Event Enable Clear Register
02A0 208C	QEESR	QDMA Event Enable Set Register
02A0 2090	QSER	QDMA Secondary Event Register
02A0 2094	QSECR	QDMA Secondary Event Clear Register
02A0 2098 - 02A0 21FF	-	Reserved
Shadow Region 1 Channel Registers		
02A0 2200	ER	Event Register
02A0 2204	ERH	Event Register High
02A0 2208	ECR	Event Clear Register
02A0 220C	ECRH	Event Clear Register High
02A0 2210	ESR	Event Set Register
02A0 2214	ESRH	Event Set Register High

PRODUCT PREVIEW

Table 7-4 EDMA3 Registers (Part 9 of 15)

Hex Address	Acronym	Register Name
02A0 2218	CER	Chained Event Register
02A0 221C	CERH	Chained Event Register High
02A0 2220	EER	Event Enable Register
02A0 2224	EERH	Event Enable Register High
02A0 2228	EECR	Event Enable Clear Register
02A0 222C	EECRH	Event Enable Clear Register High
02A0 2230	EESR	Event Enable Set Register
02A0 2234	EESRH	Event Enable Set Register High
02A0 2238	SER	Secondary Event Register
02A0 223C	SERH	Secondary Event Register High
02A0 2240	SECR	Secondary Event Clear Register
02A0 2244	SECRH	Secondary Event Clear Register High
02A0 2248 - 02A0 224C	-	Reserved
02A0 2250	IER	Interrupt Enable Register
02A0 2254	IERH	Interrupt Enable Register High
02A0 2258	IECR	Interrupt Enable Clear Register
02A0 225C	IECRH	Interrupt Enable Clear Register High
02A0 2260	IESR	Interrupt Enable Set Register
02A0 2264	IESRH	Interrupt Enable Set Register High
02A0 2268	IPR	Interrupt Pending Register
02A0 226C	IPRH	Interrupt Pending Register High
02A0 2270	ICR	Interrupt Clear Register
02A0 2274	ICRH	Interrupt Clear Register High
02A0 2278	IEVAL	Interrupt Evaluate Register
02A0 227C	-	Reserved
02A0 2280	QER	QDMA Event Register
02A0 2284	QEER	QDMA Event Enable Register
02A0 2288	QEECR	QDMA Event Enable Clear Register
02A0 228C	QEESR	QDMA Event Enable Set Register
02A0 2290	QSER	QDMA Secondary Event Register
02A0 2294	QSECR	QDMA Secondary Event Clear Register
02A0 2298 - 02A0 23FF	-	Reserved
Shadow Region 2 Channel Registers		
02A0 2400	ER	Event Register
02A0 2404	ERH	Event Register High
02A0 2408	ECR	Event Clear Register
02A0 240C	ECRH	Event Clear Register High
02A0 2410	ESR	Event Set Register
02A0 2414	ESRH	Event Set Register High
02A0 2418	CER	Chained Event Register
02A0 241C	CERH	Chained Event Register High
02A0 2420	EER	Event Enable Register
02A0 2424	EERH	Event Enable Register High
02A0 2428	EECR	Event Enable Clear Register

PRODUCT PREVIEW

Table 7-4 EDMA3 Registers (Part 10 of 15)

Hex Address	Acronym	Register Name
02A0 242C	EECRH	Event Enable Clear Register High
02A0 2430	EESR	Event Enable Set Register
02A0 2434	EESRH	Event Enable Set Register High
02A0 2438	SER	Secondary Event Register
02A0 243C	SERH	Secondary Event Register High
02A0 2440	SECR	Secondary Event Clear Register
02A0 2444	SECRH	Secondary Event Clear Register High
02A0 2448 - 02A0 244C	-	Reserved
02A0 2450	IER	Interrupt Enable Register
02A0 2454	IERH	Interrupt Enable Register High
02A0 2458	IECR	Interrupt Enable Clear Register
02A0 245C	IECRH	Interrupt Enable Clear Register High
02A0 2460	IESR	Interrupt Enable Set Register
02A0 2464	IESRH	Interrupt Enable Set Register High
02A0 2468	IPR	Interrupt Pending Register
02A0 246C	IPRH	Interrupt Pending Register High
02A0 2470	ICR	Interrupt Clear Register
02A0 2474	ICRH	Interrupt Clear Register High
02A0 2478	IEVAL	Interrupt Evaluate Register
02A0 247C	-	Reserved
02A0 2480	QER	QDMA Event Register
02A0 2484	QEER	QDMA Event Enable Register
02A0 2488	QEECR	QDMA Event Enable Clear Register
02A0 248C	QEESR	QDMA Event Enable Set Register
02A0 2490	QSER	QDMA Secondary Event Register
02A0 2494	QSECR	QDMA Secondary Event Clear Register
02A0 2498 - 02A0 25FF	-	Reserved
Shadow Region 3 Channel Registers		
02A0 2600	ER	Event Register
02A0 2604	ERH	Event Register High
02A0 2608	ECR	Event Clear Register
02A0 260C	ECRH	Event Clear Register High
02A0 2610	ESR	Event Set Register
02A0 2614	ESRH	Event Set Register High
02A0 2618	CER	Chained Event Register
02A0 261C	CERH	Chained Event Register High
02A0 2620	EER	Event Enable Register
02A0 2624	EERH	Event Enable Register High
02A0 2628	EECR	Event Enable Clear Register
02A0 262C	EECRH	Event Enable Clear Register High
02A0 2630	EESR	Event Enable Set Register
02A0 2634	EESRH	Event Enable Set Register High
02A0 2638	SER	Secondary Event Register
02A0 263C	SERH	Secondary Event Register High

PRODUCT PREVIEW

Table 7-4 EDMA3 Registers (Part 11 of 15)

Hex Address	Acronym	Register Name
02A0 2640	SECR	Secondary Event Clear Register
02A0 2644	SECRH	Secondary Event Clear Register High
02A0 2648 - 02A0 264C	-	Reserved
02A0 2650	IER	Interrupt Enable Register
02A0 2654	IERH	Interrupt Enable Register High
02A0 2658	IECR	Interrupt Enable Clear Register
02A0 265C	IECRH	Interrupt Enable Clear Register High
02A0 2660	IESR	Interrupt Enable Set Register
02A0 2664	IESRH	Interrupt Enable Set Register High
02A0 2668	IPR	Interrupt Pending Register
02A0 266C	IPRH	Interrupt Pending Register High
02A0 2670	ICR	Interrupt Clear Register
02A0 2674	ICRH	Interrupt Clear Register High
02A0 2678	IEVAL	Interrupt Evaluate Register
02A0 267C	-	Reserved
02A0 2680	QER	QDMA Event Register
02A0 2684	QEER	QDMA Event Enable Register
02A0 2688	QEECR	QDMA Event Enable Clear Register
02A0 268C	QEESR	QDMA Event Enable Set Register
02A0 2690	QSER	QDMA Secondary Event Register
02A0 2694	QSECR	QDMA Secondary Event Clear Register
02A0 2698 - 02A0 27FF	-	Reserved
Shadow Region 4 Channel Registers		
02A0 2800	ER	Event Register
02A0 2804	ERH	Event Register High
02A0 2808	ECR	Event Clear Register
02A0 280C	ECRH	Event Clear Register High
02A0 2810	ESR	Event Set Register
02A0 2814	ESRH	Event Set Register High
02A0 2818	CER	Chained Event Register
02A0 281C	CERH	Chained Event Register High
02A0 2820	EER	Event Enable Register
02A0 2824	EERH	Event Enable Register High
02A0 2828	EECR	Event Enable Clear Register
02A0 282C	EECRH	Event Enable Clear Register High
02A0 2830	EESR	Event Enable Set Register
02A0 2834	EESRH	Event Enable Set Register High
02A0 2838	SER	Secondary Event Register
02A0 283C	SERH	Secondary Event Register High
02A0 2840	SECR	Secondary Event Clear Register
02A0 2844	SECRH	Secondary Event Clear Register High
02A0 2848 - 02A0 284C	-	Reserved
02A0 2850	IER	Interrupt Enable Register
02A0 2854	IERH	Interrupt Enable Register High

PRODUCT PREVIEW

Table 7-4 EDMA3 Registers (Part 12 of 15)

Hex Address	Acronym	Register Name
02A0 2858	IECR	Interrupt Enable Clear Register
02A0 285C	IECRH	Interrupt Enable Clear Register High
02A0 2860	IESR	Interrupt Enable Set Register
02A0 2864	IESRH	Interrupt Enable Set Register High
02A0 2868	IPR	Interrupt Pending Register
02A0 286C	IPRH	Interrupt Pending Register High
02A0 2870	ICR	Interrupt Clear Register
02A0 2874	ICRH	Interrupt Clear Register High
02A0 2878	IEVAL	Interrupt Evaluate Register
02A0 287C	-	Reserved
02A0 2880	QER	QDMA Event Register
02A0 2884	QEER	QDMA Event Enable Register
02A0 2888	QEECR	QDMA Event Enable Clear Register
02A0 288C	QEESR	QDMA Event Enable Set Register
02A0 2890	QSER	QDMA Secondary Event Register
02A0 2894	QSECR	QDMA Secondary Event Clear Register
02A0 2898 - 02A0 29FF	-	Reserved
Shadow Region 5 Channel Registers		
02A0 2A00	ER	Event Register
02A0 2A04	ERH	Event Register High
02A0 2A08	ECR	Event Clear Register
02A0 2A0C	ECRH	Event Clear Register High
02A0 2A10	ESR	Event Set Register
02A0 2A14	ESRH	Event Set Register High
02A0 2A18	CER	Chained Event Register
02A0 2A1C	CERH	Chained Event Register High
02A0 2A20	EER	Event Enable Register
02A0 2A24	EERH	Event Enable Register High
02A0 2A28	EECR	Event Enable Clear Register
02A0 2A2C	EECRH	Event Enable Clear Register High
02A0 2A30	EESR	Event Enable Set Register
02A0 2A34	EESRH	Event Enable Set Register High
02A0 2A38	SER	Secondary Event Register
02A0 2A3C	SERH	Secondary Event Register High
02A0 2A40	SECR	Secondary Event Clear Register
02A0 2A44	SECRH	Secondary Event Clear Register High
02A0 2A48 - 02A0 2A4C	-	Reserved
02A0 2A50	IER	Interrupt Enable Register
02A0 2A54	IERH	Interrupt Enable Register High
02A0 2A58	IECR	Interrupt Enable Clear Register
02A0 2A5C	IECRH	Interrupt Enable Clear Register High
02A0 2A60	IESR	Interrupt Enable Set Register
02A0 2A64	IESRH	Interrupt Enable Set Register High
02A0 2A68	IPR	Interrupt Pending Register

PRODUCT PREVIEW

Table 7-4 EDMA3 Registers (Part 13 of 15)

Hex Address	Acronym	Register Name
02A0 2A6C	IPRH	Interrupt Pending Register High
02A0 2A70	ICR	Interrupt Clear Register
02A0 2A74	ICRH	Interrupt Clear Register High
02A0 2A78	IEVAL	Interrupt Evaluate Register
02A0 2A7C	-	Reserved
02A0 2A80	QER	QDMA Event Register
02A0 2A84	QEER	QDMA Event Enable Register
02A0 2A88	QEECR	QDMA Event Enable Clear Register
02A0 2A8C	QEESR	QDMA Event Enable Set Register
02A0 2A90	QSER	QDMA Secondary Event Register
02A0 2A94	QSECR	QDMA Secondary Event Clear Register
02A0 2A98 - 02A0 2BFF	-	Reserved
Shadow Region 6 Channel Registers		
02A0 2C00	ER	Event Register
02A0 2C04	ERH	Event Register High
02A0 2C08	ECR	Event Clear Register
02A0 2C0C	ECRH	Event Clear Register High
02A0 2C10	ESR	Event Set Register
02A0 2C14	ESRH	Event Set Register High
02A0 2C18	CER	Chained Event Register
02A0 2C1C	CERH	Chained Event Register High
02A0 2C20	EER	Event Enable Register
02A0 2C24	EERH	Event Enable Register High
02A0 2C28	EECR	Event Enable Clear Register
02A0 2C2C	EECRH	Event Enable Clear Register High
02A0 2C30	EESR	Event Enable Set Register
02A0 2C34	EESRH	Event Enable Set Register High
02A0 2C38	SER	Secondary Event Register
02A0 2C3C	SERH	Secondary Event Register High
02A0 2C40	SECR	Secondary Event Clear Register
02A0 2C44	SECRH	Secondary Event Clear Register High
02A0 2C48 - 02A0 2C4C	-	Reserved
02A0 2C50	IER	Interrupt Enable Register
02A0 2C54	IERH	Interrupt Enable Register High
02A0 2C58	IECR	Interrupt Enable Clear Register
02A0 2C5C	IECRH	Interrupt Enable Clear Register High
02A0 2C60	IESR	Interrupt Enable Set Register
02A0 2C64	IESRH	Interrupt Enable Set Register High
02A0 2C68	IPR	Interrupt Pending Register
02A0 2C6C	IPRH	Interrupt Pending Register High
02A0 2C70	ICR	Interrupt Clear Register
02A0 2C74	ICRH	Interrupt Clear Register High
02A0 2C78	IEVAL	Interrupt Evaluate Register
02A0 2C7C	-	Reserved

PRODUCT PREVIEW

Table 7-4 EDMA3 Registers (Part 14 of 15)

Hex Address	Acronym	Register Name
02A0 2C80	QER	QDMA Event Register
02A0 2C84	QEER	QDMA Event Enable Register
02A0 2C88	QEECR	QDMA Event Enable Clear Register
02A0 2C8C	QEESR	QDMA Event Enable Set Register
02A0 2C90	QSER	QDMA Secondary Event Register
02A0 2C94	QSECR	QDMA Secondary Event Clear Register
02A0 2C98 - 02A0 2DFF	-	Reserved
Shadow Region 7 Channel Registers		
02A0 2E00	ER	Event Register
02A0 2E04	ERH	Event Register High
02A0 2E08	ECR	Event Clear Register
02A0 2E0C	ECRH	Event Clear Register High
02A0 2E10	ESR	Event Set Register
02A0 2E14	ESRH	Event Set Register High
02A0 2E18	CER	Chained Event Register
02A0 2E1C	CERH	Chained Event Register High
02A0 2E20	EER	Event Enable Register
02A0 2E24	EERH	Event Enable Register High
02A0 2E28	EECR	Event Enable Clear Register
02A0 2E2C	EECRH	Event Enable Clear Register High
02A0 2E30	EESR	Event Enable Set Register
02A0 2E34	EESRH	Event Enable Set Register High
02A0 2E38	SER	Secondary Event Register
02A0 2E3C	SERH	Secondary Event Register High
02A0 2E40	SECR	Secondary Event Clear Register
02A0 2E44	SECRH	Secondary Event Clear Register High
02A0 2E48 - 02A0 2E4C	-	Reserved
02A0 2E50	IER	Interrupt Enable Register
02A0 2E54	IERH	Interrupt Enable Register High
02A0 2E58	IECR	Interrupt Enable Clear Register
02A0 2E5C	IECRH	Interrupt Enable Clear Register High
02A0 2E60	IESR	Interrupt Enable Set Register
02A0 2E64	IESRH	Interrupt Enable Set Register High
02A0 2E68	IPR	Interrupt Pending Register
02A0 2E6C	IPRH	Interrupt Pending Register High
02A0 2E70	ICR	Interrupt Clear Register
02A0 2E74	ICRH	Interrupt Clear Register High
02A0 2E78	IEVAL	Interrupt Evaluate Register
02A0 2E7C	-	Reserved
02A0 2E80	QER	QDMA Event Register
02A0 2E84	QEER	QDMA Event Enable Register
02A0 2E88	QEECR	QDMA Event Enable Clear Register
02A0 2E8C	QEESR	QDMA Event Enable Set Register
02A0 2E90	QSER	QDMA Secondary Event Register

PRODUCT PREVIEW

Table 7-4 EDMA3 Registers (Part 15 of 15)

Hex Address	Acronym	Register Name
02A0 2E94	QSECR	QDMA Secondary Event Clear Register
02A0 2E98 - 02A0 2FFF	-	Reserved
End of Table 7-4		

Table 7-5 EDMA3 Parameter RAM

Hex Address Range	Acronym	Register Name
02A0 4000 - 02A0 401F	-	Parameter Set 0
02A0 4020 - 02A0 403F	-	Parameter Set 1
02A0 4040 - 02A0 405F	-	Parameter Set 2
02A0 4060 - 02A0 407F	-	Parameter Set 3
02A0 4080 - 02A0 409F	-	Parameter Set 4
02A0 40A0 - 02A0 40BF	-	Parameter Set 5
02A0 40C0 - 02A0 40DF	-	Parameter Set 6
02A0 40E0 - 02A0 40FF	-	Parameter Set 7
02A0 4100 - 02A0 411F	-	Parameter Set 8
02A0 4120 - 02A0 413F	-	Parameter Set 9
...		...
02A0 47E0 - 02A0 47FF	-	Parameter Set 63
02A0 4800 - 02A0 481F	-	Parameter Set 64
02A0 4820 - 02A0 483F	-	Parameter Set 65
...		...
02A0 5FC0 - 02A0 5FDF	-	Parameter Set 254
02A0 5FE0 - 02A0 5FFF	-	Parameter Set 255
End of Table 7-5		

Table 7-6 EDMA3 Transfer Controller 0 Registers (Part 1 of 2)

Hex Address Range	Acronym	Register Name
02A2 0000	PID	Peripheral Identification Register
02A2 0004	TCCFG	EDMA3TC Configuration Register
02A2 0008 - 02A2 00FC	-	Reserved
02A2 0100	TCSTAT	EDMA3TC Channel Status Register
02A2 0104 - 02A2 011C	-	Reserved
02A2 0120	ERRSTAT	Error Register
02A2 0124	ERREN	Error Enable Register
02A2 0128	ERRCLR	Error Clear Register
02A2 012C	ERRDET	Error Details Register
02A2 0130	ERRCMD	Error Interrupt Command Register
02A2 0134 - 02A2 013C	-	Reserved
02A2 0140	RDRATE	Read Rate Register
02A2 0144 - 02A2 023C	-	Reserved
02A2 0240	SAOPT	Source Active Options Register
02A2 0244	SASRC	Source Active Source Address Register
02A2 0248	SACNT	Source Active Count Register

PRODUCT PREVIEW

Table 7-6 EDMA3 Transfer Controller 0 Registers (Part 2 of 2)

Hex Address Range	Acronym	Register Name
02A2 024C	SADST	Source Active Destination Address Register
02A2 0250	SABIDX	Source Active Source B-Index Register
02A2 0254	SAMPPRXY	Source Active Memory Protection Proxy Register
02A2 0258	SACNTRLD	Source Active Count Reload Register
02A2 025C	SASRCBREF	Source Active Source Address B-Reference Register
02A2 0260	SADSTBREF	Source Active Destination Address B-Reference Register
02A2 0264 - 02A2 027C	-	Reserved
02A2 0280	DFCNTRLD	Destination FIFO Set Count Reload
02A2 0284	DFSRCBREF	Destination FIFO Set Destination Address B Reference Register
02A2 0288	DFDSTBREF	Destination FIFO Set Destination Address B Reference Register
02A2 028C - 02A2 02FC	-	Reserved
02A2 0300	DFOPT0	Destination FIFO Options Register 0
02A2 0304	DFSRC0	Destination FIFO Source Address Register 0
02A2 0308	DFCNT0	Destination FIFO Count Register 0
02A2 030C	DFDST0	Destination FIFO Destination Address Register 0
02A2 0310	DFBIDX0	Destination FIFO BIDX Register 0
02A2 0314	DFMPPRXY0	Destination FIFO Memory Protection Proxy Register 0
02A2 0318 - 02A2 033C	-	Reserved
02A2 0340	DFOPT1	Destination FIFO Options Register 1
02A2 0344	DFSRC1	Destination FIFO Source Address Register 1
02A2 0348	DFCNT1	Destination FIFO Count Register 1
02A2 034C	DFDST1	Destination FIFO Destination Address Register 1
02A2 0350	DFBIDX1	Destination FIFO BIDX Register 1
02A2 0354	DFMPPRXY1	Destination FIFO Memory Protection Proxy Register 1
02A2 0358 - 02A2 037C	-	Reserved
02A2 0380	DFOPT2	Destination FIFO Options Register 2
02A2 0384	DFSRC2	Destination FIFO Source Address Register 2
02A2 0388	DFCNT2	Destination FIFO Count Register 2
02A2 038C	DFDST2	Destination FIFO Destination Address Register 2
02A2 0390	DFBIDX2	Destination FIFO BIDX Register 2
02A2 0394	DFMPPRXY2	Destination FIFO Memory Protection Proxy Register 2
02A2 0398 - 02A2 03BC	-	Reserved
02A2 03C0	DFOPT3	Destination FIFO Options Register 3
02A2 03C4	DFSRC3	Destination FIFO Source Address Register 3
02A2 03C8	DFCNT3	Destination FIFO Count Register 3
02A2 03CC	DFDST3	Destination FIFO Destination Address Register 3
02A2 03D0	DFBIDX3	Destination FIFO BIDX Register 3
02A2 03D4	DFMPPRXY3	Destination FIFO Memory Protection Proxy Register 3
02A2 03D8 - 02A2 7FFC	-	Reserved
End of Table 7-6		

PRODUCT PREVIEW

Table 7-7 EDMA3 Transfer Controller 1 Registers (Part 1 of 2)

Hex Address Range	Acronym	Register Name
02A2 8000	PID	Peripheral Identification Register
02A2 8004	TCCFG	EDMA3TC Configuration Register
02A2 8008 - 02A2 80FC	-	Reserved
02A2 8100	TCSTAT	EDMA3TC Channel Status Register
02A2 8104 - 02A2 811C	-	Reserved
02A2 8120	ERRSTAT	Error Register
02A2 8124	ERREN	Error Enable Register
02A2 8128	ERRCLR	Error Clear Register
02A2 812C	ERRDET	Error Details Register
02A2 8130	ERRCMD	Error Interrupt Command Register
02A2 8134 - 02A2 813C	-	Reserved
02A2 8140	RDRATE	Read Rate Register
02A2 8144 - 02A2 823C	-	Reserved
02A2 8240	SAOPT	Source Active Options Register
02A2 8244	SASRC	Source Active Source Address Register
02A2 8248	SACNT	Source Active Count Register
02A2 824C	SADST	Source Active Destination Address Register
02A2 8250	SABIDX	Source Active Source B-Index Register
02A2 8254	SAMPPRXY	Source Active Memory Protection Proxy Register
02A2 8258	SACNTRLD	Source Active Count Reload Register
02A2 825C	SASRCBREF	Source Active Source Address B-Reference Register
02A2 8260	SADSTBREF	Source Active Destination Address B-Reference Register
02A2 8264 - 02A2 827C	-	Reserved
02A2 8280	DFCNTRLD	Destination FIFO Set Count Reload
02A2 8284	DFSRCBREF	Destination FIFO Set Destination Address B Reference Register
02A2 8288	DFDSTBREF	Destination FIFO Set Destination Address B Reference Register
02A2 828C - 02A2 82FC	-	Reserved
02A2 8300	DFOPT0	Destination FIFO Options Register 0
02A2 8304	DFSRC0	Destination FIFO Source Address Register 0
02A2 8308	DFCNT0	Destination FIFO Count Register 0
02A2 830C	DFDST0	Destination FIFO Destination Address Register 0
02A2 8310	DFBIDX0	Destination FIFO BIDX Register 0
02A2 8314	DFM PPRXY0	Destination FIFO Memory Protection Proxy Register 0
02A2 8318 - 02A2 833C	-	Reserved
02A2 8340	DFOPT1	Destination FIFO Options Register 1
02A2 8344	DFSRC1	Destination FIFO Source Address Register 1
02A2 8348	DFCNT1	Destination FIFO Count Register 1
02A2 834C	DFDST1	Destination FIFO Destination Address Register 1
02A2 8350	DFBIDX1	Destination FIFO BIDX Register 1
02A2 8354	DFMPPRXY1	Destination FIFO Memory Protection Proxy Register 1
02A2 8358 - 02A2 837C	-	Reserved
02A2 8380	DFOPT2	Destination FIFO Options Register 2
02A2 8384	DFSRC2	Destination FIFO Source Address Register 2
02A2 8388	DFCNT2	Destination FIFO Count Register 2

PRODUCT PREVIEW

Table 7-7 EDMA3 Transfer Controller 1 Registers (Part 2 of 2)

Hex Address Range	Acronym	Register Name
02A2 838C	DFDST2	Destination FIFO Destination Address Register 2
02A2 8390	DFBIDX2	Destination FIFO BIDX Register 2
02A2 8394	DFMPPRXY2	Destination FIFO Memory Protection Proxy Register 2
02A2 8398 - 02A2 83BC	-	Reserved
02A2 83C0	DFOPT3	Destination FIFO Options Register 3
02A2 83C4	DFSRC3	Destination FIFO Source Address Register 3
02A2 83C8	DFCNT3	Destination FIFO Count Register 3
02A2 83CC	DFDST3	Destination FIFO Destination Address Register 3
02A2 83D0	DFBIDX3	Destination FIFO BIDX Register 3
02A2 83D4	DFMPPRXY3	Destination FIFO Memory Protection Proxy Register 3
02A2 83D8 - 02A2 FFFC	-	Reserved
End of Table 7-7		

Table 7-8 EDMA3 Transfer Controller 2 Registers (Part 1 of 2)

Hex Address Range	Acronym	Register Name
02A3 0000	PID	Peripheral Identification Register
02A3 0004	TCCFG	EDMA3TC Configuration Register
02A3 0008 - 02A3 00FC	-	Reserved
02A3 0100	TCSTAT	EDMA3TC Channel Status Register
02A3 0104 - 02A3 011C	-	Reserved
02A3 0120	ERRSTAT	Error Register
02A3 0124	ERREN	Error Enable Register
02A3 0128	ERRCLR	Error Clear Register
02A3 012C	ERRDET	Error Details Register
02A3 0130	ERRCMD	Error Interrupt Command Register
02A3 0134 - 02A3 013C	-	Reserved
02A3 0140	RDRATE	Read Rate Register
02A3 0144 - 02A3 023C	-	Reserved
02A3 0240	SAOPT	Source Active Options Register
02A3 0244	SASRC	Source Active Source Address Register
02A3 0248	SACNT	Source Active Count Register
02A3 024C	SADST	Source Active Destination Address Register
02A3 0250	SABIDX	Source Active Source B-Index Register
02A3 0254	SAMPPRXY	Source Active Memory Protection Proxy Register
02A3 0258	SACNTRLD	Source Active Count Reload Register
02A3 025C	SASRCBREF	Source Active Source Address B-Reference Register
02A3 0260	SADSTBREF	Source Active Destination Address B-Reference Register
02A3 0264 - 02A3 027C	-	Reserved
02A3 0280	DFCNTRLD	Destination FIFO Set Count Reload
02A3 0284	DFSRCBREF	Destination FIFO Set Destination Address B Reference Register
02A3 0288	DFDSTBREF	Destination FIFO Set Destination Address B Reference Register
02A3 028C - 02A3 02FC	-	Reserved
02A3 0300	DFOPT0	Destination FIFO Options Register 0

PRODUCT PREVIEW

Table 7-8 EDMA3 Transfer Controller 2 Registers (Part 2 of 2)

Hex Address Range	Acronym	Register Name
02A3 0304	DFSRC0	Destination FIFO Source Address Register 0
02A3 0308	DFCNT0	Destination FIFO Count Register 0
02A3 030C	DFDST0	Destination FIFO Destination Address Register 0
02A3 0310	DFBIDX0	Destination FIFO BIDX Register 0
02A3 0314	DFMPPRXY0	Destination FIFO Memory Protection Proxy Register 0
02A3 0318 - 02A3 033C	-	Reserved
02A3 0340	DFOPT1	Destination FIFO Options Register 1
02A3 0344	DFSRC1	Destination FIFO Source Address Register 1
02A3 0348	DFCNT1	Destination FIFO Count Register 1
02A3 034C	DFDST1	Destination FIFO Destination Address Register 1
02A3 0350	DFBIDX1	Destination FIFO BIDX Register 1
02A3 0354	DFMPPRXY1	Destination FIFO Memory Protection Proxy Register 1
02A3 0358 - 02A3 037C	-	Reserved
02A3 0380	DFOPT2	Destination FIFO Options Register 2
02A3 0384	DFSRC2	Destination FIFO Source Address Register 2
02A3 0388	DFCNT2	Destination FIFO Count Register 2
02A3 038C	DFDST2	Destination FIFO Destination Address Register 2
02A3 0390	DFBIDX2	Destination FIFO BIDX Register 2
02A3 0394	DFMPPRXY2	Destination FIFO Memory Protection Proxy Register 2
02A3 0398 - 02A3 03BC	-	Reserved
02A3 03C0	DFOPT3	Destination FIFO Options Register 3
02A3 03C4	DFSRC3	Destination FIFO Source Address Register 3
02A3 03C8	DFCNT3	Destination FIFO Count Register 3
02A3 03CC	DFDST3	Destination FIFO Destination Address Register 3
02A3 03D0	DFBIDX3	Destination FIFO BIDX Register 3
02A3 03D4	DFMPPRXY3	Destination FIFO Memory Protection Proxy Register 3
02A3 03D8 - 02A3 7FFC	-	Reserved
End of Table 7-8		

Table 7-9 EDMA3 Transfer Controller 3 Registers (Part 1 of 3)

Hex Address Range	Acronym	Register Name
02A3 8000	PID	Peripheral Identification Register
02A3 8004	TCCFG	EDMA3TC Configuration Register
02A3 8008 - 02A3 80FC	-	Reserved
02A3 8100	TCSTAT	EDMA3TC Channel Status Register
02A3 8104 - 02A3 811C	-	Reserved
02A3 8120	ERRSTAT	Error Register
02A3 8124	ERREN	Error Enable Register
02A3 8128	ERRCLR	Error Clear Register
02A3 812C	ERRDET	Error Details Register
02A3 8130	ERRCMD	Error Interrupt Command Register
02A3 8134 - 02A3 813C	-	Reserved

PRODUCT PREVIEW

Table 7-9 EDMA3 Transfer Controller 3 Registers (Part 2 of 3)

Hex Address Range	Acronym	Register Name
02A3 8140	RDRATE	Read Rate Register
02A3 8144 - 02A3 823C	-	Reserved
02A3 8240	SAOPT	Source Active Options Register
02A3 8244	SASRC	Source Active Source Address Register
02A3 8248	SACNT	Source Active Count Register
02A3 824C	SADST	Source Active Destination Address Register
02A3 8250	SABIDX	Source Active Source B-Index Register
02A3 8254	SAMPPRXY	Source Active Memory Protection Proxy Register
02A3 8258	SACNTRLD	Source Active Count Reload Register
02A3 825C	SASRCBREF	Source Active Source Address B-Reference Register
02A3 8260	SADSTBREF	Source Active Destination Address B-Reference Register
02A3 8264 - 02A3 827C	-	Reserved
02A3 8280	DFCNTRLD	Destination FIFO Set Count Reload
02A3 8284	DFSRCBREF	Destination FIFO Set Destination Address B Reference Register
02A3 8288	DFDSTBREF	Destination FIFO Set Destination Address B Reference Register
02A3 828C - 02A3 82FC	-	Reserved
02A3 8300	DFOPT0	Destination FIFO Options Register 0
02A3 8304	DFSRC0	Destination FIFO Source Address Register 0
02A3 8308	DFCNT0	Destination FIFO Count Register 0
02A3 830C	DFDST0	Destination FIFO Destination Address Register 0
02A3 8310	DFBIDX0	Destination FIFO BIDX Register 0
02A3 8314	DFMPPRXY0	Destination FIFO Memory Protection Proxy Register 0
02A3 8318 - 02A3 833C	-	Reserved
02A3 8340	DFOPT1	Destination FIFO Options Register 1
02A3 8344	DFSRC1	Destination FIFO Source Address Register 1
02A3 8348	DFCNT1	Destination FIFO Count Register 1
02A3 834C	DFDST1	Destination FIFO Destination Address Register 1
02A3 8350	DFBIDX1	Destination FIFO BIDX Register 1
02A3 8354	DFMPPRXY1	Destination FIFO Memory Protection Proxy Register 1
02A3 8358 - 02A3 837C	-	Reserved
02A3 8380	DFOPT2	Destination FIFO Options Register 2
02A3 8384	DFSRC2	Destination FIFO Source Address Register 2
02A3 8388	DFCNT2	Destination FIFO Count Register 2
02A3 838C	DFDST2	Destination FIFO Destination Address Register 2
02A3 8390	DFBIDX2	Destination FIFO BIDX Register 2
02A3 8394	DFMPPRXY2	Destination FIFO Memory Protection Proxy Register 2
02A3 8398 - 02A3 83BC	-	Reserved
02A3 83C0	DFOPT3	Destination FIFO Options Register 3
02A3 83C4	DFSRC3	Destination FIFO Source Address Register 3
02A3 83C8	DFCNT3	Destination FIFO Count Register 3
02A3 83CC	DFDST3	Destination FIFO Destination Address Register 3
02A3 83D0	DFBIDX3	Destination FIFO BIDX Register 3

PRODUCT PREVIEW

Table 7-9 EDMA3 Transfer Controller 3 Registers (Part 3 of 3)

Hex Address Range	Acronym	Register Name
02A3 83D4	DFMPPRXY3	Destination FIFO Memory Protection Proxy Register 3
02A3 83D8 - 02A3 FFFC	-	Reserved
End of Table 7-9		

Table 7-10 EDMA3 Transfer Controller 4 Registers (Part 1 of 2)

Hex Address Range	Acronym	Register Name
02A4 0000	PID	Peripheral Identification Register
02A4 0004	TCCFG	EDMA3TC Configuration Register
02A4 0008 - 02A4 00FC	-	Reserved
02A4 0100	TCSTAT	EDMA3TC Channel Status Register
02A4 0104 - 02A4 011C	-	Reserved
02A4 0120	ERRSTAT	Error Register
02A4 0124	ERREN	Error Enable Register
02A4 0128	ERRCLR	Error Clear Register
02A4 012C	ERRDET	Error Details Register
02A4 0130	ERRCMD	Error Interrupt Command Register
02A4 0134 - 02A4 013C	-	Reserved
02A4 0140	RDRATE	Read Rate Register
02A4 0144 - 02A4 023C	-	Reserved
02A4 0240	SAOPT	Source Active Options Register
02A4 0244	SASRC	Source Active Source Address Register
02A4 0248	SACNT	Source Active Count Register
02A4 024C	SADST	Source Active Destination Address Register
02A4 0250	SABIDX	Source Active Source B-Index Register
02A4 0254	SAMPPRXY	Source Active Memory Protection Proxy Register
02A4 0258	SACNTRLD	Source Active Count Reload Register
02A4 025C	SASRCBREF	Source Active Source Address B-Reference Register
02A4 0260	SADSTBREF	Source Active Destination Address B-Reference Register
02A4 0264 - 02A4 027C	-	Reserved
02A4 0280	DFCNTRLD	Destination FIFO Set Count Reload
02A4 0284	DFSRCBREF	Destination FIFO Set Destination Address B Reference Register
02A4 0288	DFDSTBREF	Destination FIFO Set Destination Address B Reference Register
02A4 028C - 02A4 02FC	-	Reserved
02A4 0300	DFOPT0	Destination FIFO Options Register 0
02A4 0304	DFSRC0	Destination FIFO Source Address Register 0
02A4 0308	DFCNT0	Destination FIFO Count Register 0
02A4 030C	DFDST0	Destination FIFO Destination Address Register 0
02A4 0310	DFBIDX0	Destination FIFO BIDX Register 0
02A4 0314	DFMPPRXY0	Destination FIFO Memory Protection Proxy Register 0
02A4 0318 - 02A4 033C	-	Reserved
02A4 0340	DFOPT1	Destination FIFO Options Register 1
02A4 0344	DFSRC1	Destination FIFO Source Address Register 1
02A4 0348	DFCNT1	Destination FIFO Count Register 1

PRODUCT PREVIEW

Table 7-10 EDMA3 Transfer Controller 4 Registers (Part 2 of 2)

Hex Address Range	Acronym	Register Name
02A4 034C	DFDST1	Destination FIFO Destination Address Register 1
02A4 0350	DFBIDX1	Destination FIFO BIDX Register 1
02A4 0354	DFMPPRXY1	Destination FIFO Memory Protection Proxy Register 1
02A4 0358 - 02A4 037C	-	Reserved
02A4 0380	DFOPT2	Destination FIFO Options Register 2
02A4 0384	DFSRC2	Destination FIFO Source Address Register 2
02A4 0388	DFCNT2	Destination FIFO Count Register 2
02A4 038C	DFDST2	Destination FIFO Destination Address Register 2
02A4 0390	DFBIDX2	Destination FIFO BIDX Register 2
02A4 0394	DFMPPRXY2	Destination FIFO Memory Protection Proxy Register 2
02A4 0398 - 02A4 03BC	-	Reserved
02A4 03C0	DFOPT3	Destination FIFO Options Register 3
02A4 03C4	DFSRC3	Destination FIFO Source Address Register 3
02A4 03C8	DFCNT3	Destination FIFO Count Register 3
02A4 03CC	DFDST3	Destination FIFO Destination Address Register 3
02A4 03D0	DFBIDX3	Destination FIFO BIDX Register 3
02A4 03D4	DFMPPRXY3	Destination FIFO Memory Protection Proxy Register 3
02A4 03D8 - 02A4 7FFC	-	Reserved
End of Table 7-10		

Table 7-11 EDMA3 Transfer Controller 5 Registers (Part 1 of 2)

Hex Address Range	Acronym	Register Name
02A4 8000	PID	Peripheral Identification Register
02A4 8004	TCCFG	EDMA3TC Configuration Register
02A4 8008 - 02A4 80FC	-	Reserved
02A4 8100	TCSTAT	EDMA3TC Channel Status Register
02A4 8104 - 02A4 811C	-	Reserved
02A4 8120	ERRSTAT	Error Register
02A4 8124	ERREN	Error Enable Register
02A4 8128	ERRCLR	Error Clear Register
02A4 812C	ERRDET	Error Details Register
02A4 8130	ERRCMD	Error Interrupt Command Register
02A4 8134 - 02A4 813C	-	Reserved
02A4 8140	RDRATE	Read Rate Register
02A4 8144 - 02A4 823C	-	Reserved
02A4 8240	SAOPT	Source Active Options Register
02A4 8244	SASRC	Source Active Source Address Register
02A4 8248	SACNT	Source Active Count Register
02A4 824C	SADST	Source Active Destination Address Register
02A4 8250	SABIDX	Source Active Source B-Index Register
02A4 8254	SAMPPRXY	Source Active Memory Protection Proxy Register
02A4 8258	SACNTRLD	Source Active Count Reload Register
02A4 825C	SASRCBREF	Source Active Source Address B-Reference Register

PRODUCT PREVIEW

Table 7-11 EDMA3 Transfer Controller 5 Registers (Part 2 of 2)

Hex Address Range	Acronym	Register Name
02A4 8260	SADSTBREF	Source Active Destination Address B-Reference Register
02A4 8264 - 02A4 827C	-	Reserved
02A4 8280	DFCNTRLD	Destination FIFO Set Count Reload
02A4 8284	DFSRCBREF	Destination FIFO Set Destination Address B Reference Register
02A4 8288	DFDSTBREF	Destination FIFO Set Destination Address B Reference Register
02A4 828C - 02A4 82FC	-	Reserved
02A4 8300	DFOPT0	Destination FIFO Options Register 0
02A4 8304	DFSRC0	Destination FIFO Source Address Register 0
02A4 8308	DFCNT0	Destination FIFO Count Register 0
02A4 830C	DFDST0	Destination FIFO Destination Address Register 0
02A4 8310	DFBIDX0	Destination FIFO BIDX Register 0
02A4 8314	DFMPPRXY0	Destination FIFO Memory Protection Proxy Register 0
02A4 8318 - 02A4 833C	-	Reserved
02A4 8340	DFOPT1	Destination FIFO Options Register 1
02A4 8344	DFSRC1	Destination FIFO Source Address Register 1
02A4 8348	DFCNT1	Destination FIFO Count Register 1
02A4 834C	DFDST1	Destination FIFO Destination Address Register 1
02A4 8350	DFBIDX1	Destination FIFO BIDX Register 1
02A4 8354	DFMPPRXY1	Destination FIFO Memory Protection Proxy Register 1
02A4 8358 - 02A4 837C	-	Reserved
02A4 8380	DFOPT2	Destination FIFO Options Register 2
02A4 8384	DFSRC2	Destination FIFO Source Address Register 2
02A4 8388	DFCNT2	Destination FIFO Count Register 2
02A4 838C	DFDST2	Destination FIFO Destination Address Register 2
02A4 8390	DFBIDX2	Destination FIFO BIDX Register 2
02A4 8394	DFMPPRXY2	Destination FIFO Memory Protection Proxy Register 2
02A4 8398 - 02A4 83BC	-	Reserved
02A4 83C0	DFOPT3	Destination FIFO Options Register 3
02A4 83C4	DFSRC3	Destination FIFO Source Address Register 3
02A4 83C8	DFCNT3	Destination FIFO Count Register 3
02A4 83CC	DFDST3	Destination FIFO Destination Address Register 3
02A4 83D0	DFBIDX3	Destination FIFO BIDX Register 3
02A4 83D4	DFMPPRXY3	Destination FIFO Memory Protection Proxy Register 3
02A4 83D8 - 02A4 FFFC	-	Reserved
End of Table 7-11		

PRODUCT PREVIEW

7.5 Interrupts

7.5.1 Interrupt Sources and Interrupt Controller

The CPU interrupts on the C6457 device are configured through the C64x+ Megamodule Interrupt Controller. The interrupt controller allows for up to 128 system events to be programmed to any of the twelve CPU interrupt inputs (CPUINT4 - CPUINT15), the CPU exception input (EXCEP), or the advanced emulation logic. The 128 system events consist of both internally-generated events (within the megamodule) and chip-level events. Table 7-12 shows the mapping of system events. For more information on the Interrupt Controller, see the *TMS320C64x+ Megamodule Reference Guide* (literature number SPRU871).

Table 7-12 TMS320C6457 System Event Mapping (Part 1 of 3)

Event Number	Interrupt Event	Description
0 (1)	EVT0	Output of event combiner 0 in interrupt controller, for events 1 - 31.
1 (1)	EVT1	Output of event combiner 1 in interrupt controller, for events 32 - 63.
2 (1)	EVT2	Output of event combiner 2 in interrupt controller, for events 64 - 95.
3 (1)	EVT3	Output of event combiner 3 in interrupt controller, for events 96 - 127.
4 - 8	Reserved	Reserved. These system events are not connected and, therefore, not used.
9 (1)	EMU_DTDMA	EMU interrupt for: • Host scan access • DTDMA transfer complete • AET interrupt
10	None	This system event is not connected and, therefore, not used.
11 (1)	EMU_RTDXRX	EMU real-time data exchange (RTDX) receive complete
12 (1)	EMU_RTDXTX	EMU RTDX transmit complete
13(1)	IDMA0	IDMA channel 0 interrupt
14 (1)	IDMA1	IDMA channel 1 interrupt
15	DSPINT	HPI-to-DSP interrupt
16	I2CINT	I^2C interrupt
17	MACINT	Ethernet MAC interrupt
18	AEASYNCERR	EMIFA error interrupt
19	Reserved	Reserved. This system event is not connected and, therefore, not used.
20	INTDST0	RapidIO interrupt 0
21	INTDST1	RapidIO interrupt 1
22	INTDST2	RapidIO interrupt 2
23	INTDST3	RapidIO interrupt 3
24	EDMA3CC_GINT	EDMA3 channel global completion interrupt
25	MACRXINT	Ethernet MAC receive interrupt
26	MACTXINT	Ethernet MAC transmit interrupt
27	MACTHRESH	Ethernet MAC receive threshold interrupt
28	INTDST4	RapidIO interrupt 4
29	INTDST5	RapidIO interrupt 5
30	INTDST6	RapidIO interrupt 6
31	Reserved	Reserved. These system events are not connected and, therefore, not used.
32	VCP2_INT	VCP2 error interrupt
33	TCP2A_INT	TCP2_A error interrupt
34	TCP2B_INT	TCP2_B error interrupt
35	Reserved	Reserved. These system events are not connected and, therefore, not used.
36	UINT	UTOPIA interrupt

PRODUCT PREVIEW

Table 7-12 TMS320C6457 System Event Mapping (Part 2 of 3)

Event Number	Interrupt Event	Description
37 - 39	Reserved	Reserved. These system events are not connected and, therefore, not used.
40	RINT0	McBSP0 receive interrupt
41	XINT0	McBSP0 transmit interrupt
42	RINT1	McBSP1 receive interrupt
43	XINT1	McBSP1 transmit interrupt
44 - 50	Reserved	Reserved. Do not use.
51	GPINT0	GPIO interrupt
52	GPINT1	GPIO interrupt
53	GPINT2	GPIO interrupt
54	GPINT3	GPIO interrupt
55	GPINT4	GPIO interrupt
56	GPINT5	GPIO interrupt
57	GPINT6	GPIO interrupt
58	GPINT7	GPIO interrupt
59	GPINT8	GPIO interrupt
60	GPINT9	GPIO interrupt
61	GPINT10	GPIO interrupt
62	GPINT11	GPIO interrupt
63	GPINT12	GPIO interrupt
64	GPINT13	GPIO interrupt
65	GPINT14	GPIO interrupt
66	GPINT15	GPIO interrupt
67	TINTLO0	Timer 0 lower counter interrupt
68	TINTHI0	Timer 0 higher counter interrupt
69	TINTLO1	Timer 1 lower counter interrupt
70	TINTHI1	Timer 1 higher counter interrupt
71	EDMA3CC_INT0	EDMA3CC completion interrupt - Mask0
72	EDMA3CC_INT1	EDMA3CC completion interrupt - Mask1
73	EDMA3CC_INT2	EDMA3CC completion interrupt - Mask2
74	EDMA3CC_INT3	EDMA3CC completion interrupt - Mask3
75	EDMA3CC_INT4	EDMA3CC completion interrupt - Mask4
76	EDMA3CC_INT5	EDMA3CC completion interrupt - Mask5
77	EDMA3CC_INT6	EDMA3CC completion interrupt - Mask6
78	EDMA3CC_INT7	EDMA3CC completion interrupt - Mask7
79	EDMA3CC_ERRINT	EDMA3CC error interrupt
80	Reserved	Reserved. This system event is not connected and, therefore, not used.
81	EDMA3TC0_ERRINT	EDMA3TC0 error interrupt
82	EDMA3TC1_ERRINT	EDMA3TC1 error interrupt
83	EDMA3TC2_ERRINT	EDMA3TC2 error interrupt
84	EDMA3TC3_ERRINT	EDMA3TC3 error interrupt
85	EDMA3CC_AET	EDMA3CC AET Event
86	EDMA3TC4_ERRINT	EDMA3TC4 error interrupt
87	EDMA3TC5_ERRINT	EDMA3TC5 error interrupt
88 - 93	Reserved	Reserved. These system events are not connected and, therefore, not used.

PRODUCT PREVIEW

PRODUCT PREVIEW

Table 7-12 TMS320C6457 System Event Mapping (Part 3 of 3)

Event Number	Interrupt Event	Description
94	ETBOVFLINT	Overflow condition occurred in ETB
95	ETBUNFLINT	Underflow condition occurred in ETB
96 (1)	INTERR	Interrupt Controller dropped CPU interrupt event
97 (1)	EMC_IDMAERR	EMC invalid IDMA parameters
98 - 99	Reserved	Reserved. These system events are not connected and, therefore, not used.
100 (1)	EFIINTA	EFI interrupt from side A
101 (1)	EFIINTB	EFI interrupt from side B
102 - 112	Reserved	Reserved. These system events are not connected and, therefore, not used.
113 (1)	L1P_ED1	L1P single bit error detected during DMA read
114 - 115	Reserved	Reserved. These system events are not connected and, therefore, not used.
116 (1)	L2_ED1	L2 single bit error detected
117 (1)	L2_ED2	L2 two bit error detected
118 (1)	PDC_INT	Powerdown sleep interrupt
119 (1)	SYS_CMPA	CPU memory protection fault
120 (1)	L1P_CMPA	L1P CPU memory protection fault
121 (1)	L1P_DMPA	L1P DMA memory protection fault
122 (1)	L1D_CMPA	L1D CPU memory protection fault
123 (1)	L1D_DMPA	L1D DMA memory protection fault
124 (1)	L2_CMPA	L2 CPU memory protection fault
125 (1)	L2_DMPA	L2 DMA memory protection fault
126 (1)	IDMA_CMPA	IDMA CPU memory protection fault
127 (1)	IDMA_BUSERR	IDMA bus error interrupt
End of Table 7-12		

1 This system event is generated from within the C64x+ megamodule.

7.5.2 External Interrupts Electrical Data/Timing

Table 7-13 Timing Requirements for External Interrupts (1)
(see Figure 7-8)

No.			Min	Max	Unit
1	$t_{w(NMIL)}$	Width of the NMI interrupt pulse low	6P		ns
2	$t_{w(NMIH)}$	Width of the NMI interrupt pulse high	6P		ns
End of Table 7-13					

1 P = 1/CPU clock frequency in ns. For example, when running parts at 1000 MHz, use P = 1 ns.

Figure 7-8 NMI Interrupt Timing

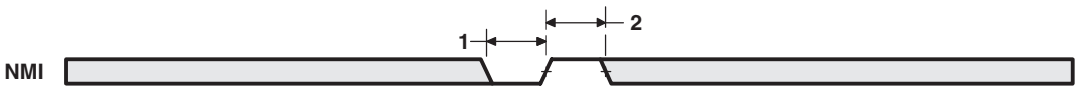

7.6 Reset Controller

The reset controller detects the different type of resets supported on the TMS320C6457 device and manages the distribution of those resets throughout the device.

The C6457 device has several types of resets:

- Power-on reset
- Warm reset
- System reset
- CPU reset

Table 7-14 explains further the types of reset, the reset initiator, and the effects of each reset on the device. For more information on the effects of each reset on the PLL controllers and their clocks, see Section 7.6.7 "Reset Electrical Data/Timing" on page 128.

Table 7-14 Reset Types

Type	Initiator	Effect(s)
Power-on Reset	$\overline{\text{POR}}$ pin	Resets the entire chip including the test and emulation logic. The device configuration pins are latched only during POR.
Warm Reset	$\overline{\text{RESET}}$ pin	Resets everything except for the test and emulation logic and PLL2. The emulator stays alive during warm reset. The device configuration pins are not re-latched. DDR2 memory contents will be preserved if the user places the DDR2 SDRAM in "Self-Refresh" mode before starting a Warm Reset sequence.
System Reset	Emulator Serial RapidIO PLLCTL (1)	System reset, by default, behaves as hard reset, but can be configured as soft reset if initiated by Serial RapidIO or PLLCTL. Emulator-initiated reset is always a hard reset. • Hard reset effects are the same as those of a warm reset. • Soft reset means external memory contents can be maintained, it does not affect the clock logic, or the power control logic of the peripherals. See 7.6.3 "System Reset" on page 124 for more details. A system reset does not reset the test and emulation circuitry. The device configuration pins are also not re-latched.
CPU Local Reset	Watchdog Timer	CPU local reset.
End of Table 7-14		

1 All masters in the device have access to the PLLCTL registers.

7.6.1 Power-on Reset ($\overline{\text{POR}}$ Pin)

Power-on reset is initiated by the $\overline{\text{POR}}$ pin and is used to reset the entire device, including the test and emulation logic. Power-on reset is also referred to as a cold reset because the device usually goes through a power-up cycle. During power-up, the $\overline{\text{POR}}$ pin must be asserted (driven low) until the power supplies have reached their normal operating conditions. Note that a device power-up cycle is not required to initiate a power-on reset. For power-on reset, the main PLL controller comes up in bypass mode and the PLL is not enabled. Other resets do not affect the state of the PLL or the dividers in the PLL controller. For the secondary PLL, the PLL is enabled and always clocking when $\overline{\text{POR}}$ is not asserted.

The following sequence must be followed during a power-on reset:

1. Wait for all power supplies to reach normal operating conditions while keeping the $\overline{\text{POR}}$ pin asserted (driven low). While $\overline{\text{POR}}$ is asserted, all pins except $\overline{\text{RESETSTAT}}$ will be set to high-impedance. After the $\overline{\text{POR}}$ pin is de-asserted (driven high), all Z group pins, low group pins, and high group pins are set to their reset state and will remain at their reset state until otherwise configured by their respective peripheral. All peripherals that are power managed, are disabled after a Power-on Reset and must be enabled through the Device State Control registers (for more details, see Section 3.2 "Peripheral Selection After Device Reset" on page 60).
2. Clocks are reset, and they are propagated throughout the chip to reset any logic that was using reset synchronously. All logic is now reset and $\overline{\text{RESETSTAT}}$ will be driven low indicating that the device is in reset.
3. $\overline{\text{POR}}$ must be held active until all supplies on the board are stable then for at least an additional 100 µs + 2000 CLKIN2 cycles.

PRODUCT PREVIEW

4. The POR pin can now be de-asserted. Reset sampled pin values are latched at this point. PLL2 is taken out of reset and begins its locking sequence, and all power-on device initialization also begins.
5. After device initialization is complete, the RESETSTAT pin is de-asserted (driven high). By this time, PLL2 has already completed its locking sequence and is outputting a valid clock. The system clocks of both PLL controllers are allowed to finish their current cycles and then paused for 10 cycles of their respective system reference clocks. After the pause, the system clocks are restarted at their default divide by settings.
6. The device is now out of reset and device execution begins as dictated by the selected boot mode.

Note—To most of the device, reset is de-asserted only when the POR and RESET pins are both de-asserted (driven high). Therefore, in the sequence described above, if the RESET pin is held low past the low period of the **POR** pin, most of the device will remain in reset. The RESET pin should not be tied together with the POR pin.

7.6.2 Warm Reset (RESET Pin)

A warm reset will reset everything on the device except the PLLs, PLL controller, test, and emulation logic. POR should also remain de-asserted during this time.

The following sequence must be followed during a warm reset:

1. The RESET pin is pulled active low for a minimum of 24 CLKIN1 cycles. During this time the RESET signal is able to propagate to all modules (except those specifically mentioned above). All I/O are Hi-Z for modules affected by RESET, to prevent off-chip contention during the warm reset.
2. Once all logic is reset, RESETSTAT is driven active to denote that the device is in reset.
3. The RESET pin can now be released. A minimal device initialization begins to occur. Note that configuration pins are not re-latched and clocking is unaffected within the device.
4. After device initialization is complete, the RESETSTAT pin is de-asserted (driven high).

Note—The POR pin should be held inactive (high) throughout the warm reset sequence. Otherwise, if POR is activated (brought low), the minimum POR pulse width must be met. The RESET pin should not be tied together with the POR pin.

Note—The DDR2 SDRAM contents will also be preserved if the user places the SDRAM into *Self-Refresh* mode before starting a Warm Reset sequence. Please see the *TMS320C6457 DSP DDR2 Memory Controller User's Guide* (literature number SPRUGK5).

7.6.3 System Reset

In a System Reset, test and emulation logic are unaffected. The device configuration pins are also not re-latched. System reset can be initiated by the emulator or Serial RapidIO or by the PLLCTL:

- **Emulator Initiated System Reset:** The emulator initiated System Reset is always a Hard Reset. The effects of a Hard Reset are the same as a Warm Reset (defined in section 7.6.2 "Warm Reset (RESET Pin)" on page 124).
- **Serial RapidIO Initiated System Reset:** The Serial Rapid IO initiated System Reset can be configured by the RSTCFG register (section 7.6.6.3 "Reset Configuration Register" on page 127) as a Soft Reset or Hard Reset. For more information on the Serial RapidIO initiated system reset, see Section 4.2 of the *TMS320C6457 DSP Serial RapidIO (SRIO) User's Guide* (literature number SPRUGK4).
- **PLLCTL Initiated System Reset**: The PLLCTL module can initiate a System Reset using the RSTCTRL register; see section 7.6.6.2 "Software Reset Control Register" on page 127. The PLLCTL initiated System Reset can be configured by the RSTCFG register (section 7.6.6.3 "Reset Configuration Register" on page 127) as a Soft Reset or Hard Reset.

PRODUCT PREVIEW

In the case of a Soft Reset, the clock logic or the power control logic of the peripherals are not affected, and, therefore, the enabled/disabled state of the peripherals is not affected. The following external memory contents are maintained during a soft reset:

- **DDR2 Memory Controller**: The DDR2 Memory Controller registers are ***not*** reset. In addition, the DDR2 SDRAM memory content is retained if the user places the DDR2 SDRAM in self-refresh mode before invoking the soft reset.
- **EMIFA**: The contents of the memory connected to the EMIFA are retained. The EMIFA registers are ***not*** reset.

During a soft reset, the following happens:

1. The $\overline{\text{RESETSTAT}}$ pin goes low to indicate an internal reset is being generated. The reset is allowed to propagate through the system. Internal system clocks are not affected. PLLs also remain locked.
2. After device initialization is complete, the $\overline{\text{RESETSTAT}}$ pin is deasserted (driven high). In addition, the PLL controllers pause their system clocks for about 10 cycles.

   At this point:

   - The state of the peripherals before the soft reset is not changed. For example, if McBSP0 was in the enabled state before soft reset, it will remain in the enabled state after soft reset.
   - The I/O pins are controlled as dictated by the DEVSTAT register.
   - The DDR2 Memory Controller and EMIFA registers retain their previous values. Only the DDR2 Memory Controller and EMIFA state machines are reset by the soft reset.
   - The PLL controllers are operating in the mode prior to soft reset. System clocks are unaffected.

The boot sequence is started after the system clocks are restarted. Since the configuration pins (including the BOOTMODE[3:0] pins) are not latched with a System Reset, the previous values, as shown in the DEVSTAT register, are used to select the boot mode.

7.6.4 CPU Reset

Timer1 can provide a local CPU reset if it is set up in watchdog mode.

7.6.5 Reset Priority

If any of the above reset sources occur simultaneously, the PLLCTL processes only the highest priority reset request. The reset request priorities are as follows (high to low):

- Power-on reset
- Warm reset and system reset

7.6.6 Reset Controller Register

There are three reset controller registers: Reset Type Status (RSTYPE) register (029A 00E4), Software Reset Control (RSTCTRL) register (029A 00E8), and Reset Configuration (RSTCFG) register (029A 00EC). All three registers fall in the same memory range as the PLL1 Controller registers [029A 0000 - 029A 0170] (see Table 7-26 "PLL1 Controller Registers (Including Reset Controller)" on page 133).

PRODUCT PREVIEW

7.6.6.1 Reset Type Status Register

The reset type status (RSTYPE) register latches the cause of the last reset. If multiple reset sources occur simultaneously, this register latches the highest priority reset source. The Reset Type Status register is shown in Table 7-15 and described in Table 7-16.

Table 7-15 Reset Type Status Register (RSTYPE)

Address - 029A 00E4h																
Bit	31	30	29	28	27	26	25	24	23	22	21	20	19	18	17	16
Acronym	Reserved			EMU-RST	Reserved											
Reset (1)	R-0			R-0	R-0											
Bit	15	14	13	12	11	10	9	8	7	6	5	4	3	2	1	0
Acronym	Reserved							SRIORST	Reserved					PLLCTRLRST	WRST	POR
Reset (1)	R-0							R-0	R-0					R-0	R-0	R-0

1 R/W = Read/Write; R = Read only; -*n* = value after reset

Table 7-16 Reset Type Status Register (RSTYPE) Field Descriptions

Bit	Acronym	Description
31:29	Reserved	Reserved. Read only. Always reads as 0. Writes have no effect.
28	EMU-RST	System reset initiated by emulator. 0 = Not the last reset to occur. 1 = The last reset to occur.
27:9	Reserved	Reserved. Read only. Always reads as 0. Writes have no effect.
8	SRIORST	System reset initiated by SRIO. 0 = Not the last reset to occur. 1 = The last reset to occur.
7:3	Reserved	Reserved. Read only. Always reads as 0. Writes have no effect.
2	PLLCTLRST	System reset initiated by PLLCTL. 0 = Not the last reset to occur. 1 = The last reset to occur.
1	WRST	Warm reset. 0 = Warm reset was not the last reset to occur. 1 = Warm reset was the last reset to occur.
0	POR	Power-on reset. 0 = Power-on reset was not the last reset to occur. 1 = Power-on reset was the last reset to occur.

End of Table 7-16

PRODUCT PREVIEW

7.6.6.2 Software Reset Control Register

This register contains a key that enables writes to the MSB of this register and the RSTCFG register. The key value is 0x5A69. A valid key will be stored as 0x000C, any other key value is invalid. When the RSTCTRL or the RSTCFG is written, the key is invalidated. Every write must be set up with a valid key. The Software Reset Control register (RSTCTRL) is shown in Table 7-17 and described in Table 7-18.

Table 7-17 Software Reset Control Register (RSTCTRL)

Hex Address - 029A 00E8h																
Bit	31	30	29	28	27	26	25	24	23	22	21	20	19	18	17	16
Acronym	Reserved															SWRST
Reset (1)	R-0x0000															R/W-0x (2)
Bit	15	14	13	12	11	10	9	8	7	6	5	4	3	2	1	0
Acronym	KEY															
Reset (1)	R/W-0x0003															

1 R/W = Read/Write; R = Read only; -*n* = value after reset
2 Writes are conditional based on valid key.

Table 7-18 Software Reset Control Register Field Descriptions

Bit	Acronym	Description
31:17	Reserved	Reserved.
16	SWRST	Software reset 0 = Reset 1 = Not reset
15:0	KEY	Key used to enable writes to RSTCTRL and RSTCFG.
End of Table 7-18		

7.6.6.3 Reset Configuration Register

This register is used to configure the type of system resets initiated by the SRIO module or a PLL controller; i.e., a hard reset or a soft reset. By default, both the system resets will be hard resets. The Reset Configuration register (RSTCFG) is shown in Table 7-19 and described in Table 7-20.

Table 7-19 Reset Configuration Register (RSTCFG)

Address - 029A 00ECh																
Bit	31	30	29	28	27	26	25	24	23	22	21	20	19	18	17	16
Acronym	Reserved															
Reset (1)	R-0x2000															
Bit	15	14	13	12	11	10	9	8	7	6	5	4	3	2	1	0
Acronym	Reserved		PLLCTLRSTTYPE	Reserved												SRIORSTTYPE
Reset (1)	R-0x000		R/W-0 (2)	R-0x000												R/W-0x0 (2)

1 R/W = Read/Write; R = Read only; -*n* = value after reset
2 Writes are conditional based on valid key. For details, see Section 7.6.6.2 "Software Reset Control Register".

Table 7-20 Reset Configuration Register (RSTCFG) Field Descriptions (Part 1 of 2)

Bit	Acronym	Description
31:14	Reserved	Reserved.
13	PLLCTLRSTTYPE	PLL controller initiates a software driven reset of type: 0 = Hard reset (default) 1 = Soft reset

PRODUCT PREVIEW

Table 7-20 Reset Configuration Register (RSTCFG) Field Descriptions (Part 2 of 2)

Bit	Acronym	Description
12:1	Reserved	Reserved.
0	SRIORSTTYPE	SRIO module initiates a reset of type: 0 = Hard Reset (default) 1 = Soft Reset
End of Table 7-20		

7.6.7 Reset Electrical Data/Timing

Table 7-21 Reset Timing Requirements (1) (2)
(see Figure 7-9 and Figure 7-10)

No.			Min	Max	Unit
1	$t_{h(SUPPLY-POR)}$	Hold Time, $\overline{POR}$ low after supplies stable and input clocks valid	1000		ns
2	$t_{su(RESETH-PORH)}$	Setup Time, $\overline{RESET}$ high to $\overline{POR}$ high	1000		ns
4	$t_{w(RESET)}$	Pulse Duration, $\overline{RESET}$ low	24C		ns
7	$t_{s(BOOT)}$	Setup time, boot mode and configuration pins valid before $\overline{POR}$ or $\overline{RESET}$ high	12C		ns
8	$t_{h(BOOT)}$	Hold time, bootmode and configuration pins valid after $\overline{POR}$ or $\overline{RESET}$ high	12C		ns
End of Table 7-21					

1 If CORECLKSEL = 0, C = 1 ÷ CORECLK(N|P) frequency in ns.
2 If CORECLKSEL = 1, C = 1 ÷ ALTCORECLK frequency in ns.

Table 7-22 Reset Switching Characteristics Over Recommended Operating Conditions
(see Figure 7-9 and Figure 7-10)

No.		Parameter	Min	Max	Unit
3	$t_{d(PORH-RSTATH)}$	Delay Time, $\overline{POR}$ high to $\overline{RESETSTAT}$ high		200	µs
5	$t_{d(RESETH-RSTATH)}$	Delay Time, $\overline{RESET}$ high to $\overline{RESETSTAT}$ high		5	µs
End of Table 7-22					

Table 7-23 Warm Reset Switching Characteristics Over Recommended Operating Conditions
(see Figure 7-10 and Figure 7-11)

No.		Parameter	Min	Max	Unit
9	$t_{su(PORH-RESETL)}$	Setup time, $\overline{POR}$ high to $\overline{RESET}$ low	1.34		ns
End of Table 7-23					

PRODUCT PREVIEW

2009 Texas Instruments Incorporated

Figure 7-9 Power-On Reset Timing

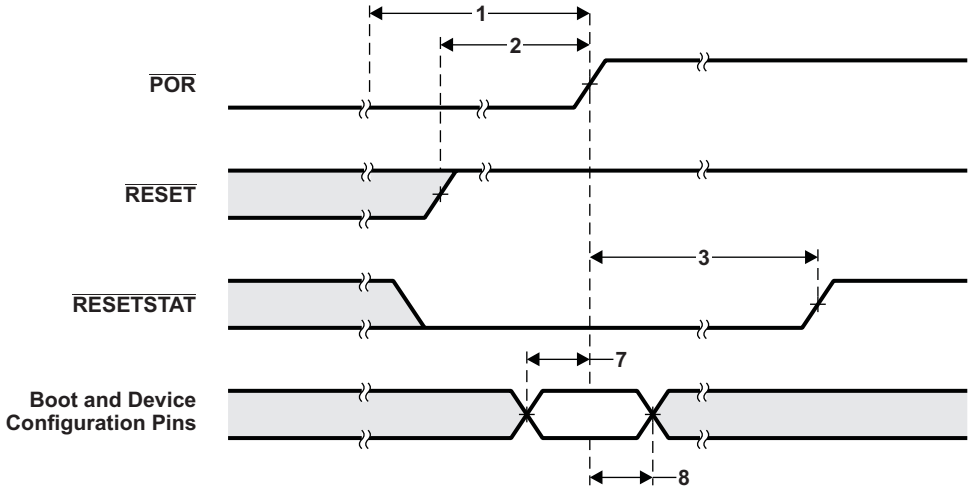

Figure 7-10 Warm Reset Timing — RESETSTAT Relative to RESET

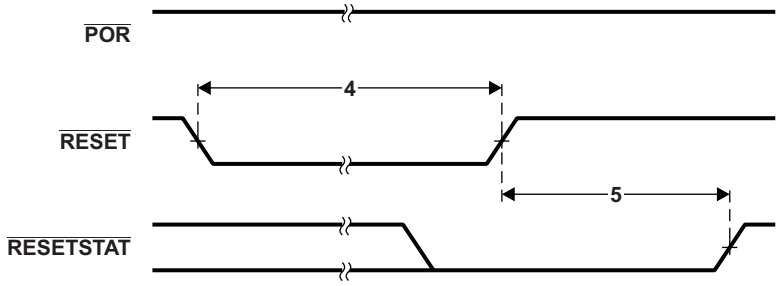

Figure 7-11 Warm Reset Timing — Setup Time Between POR De-Asserted and RESET Asserted

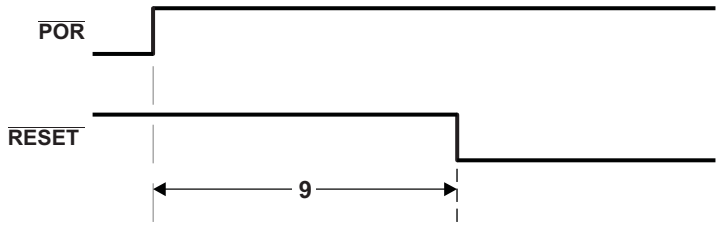

PRODUCT PREVIEW

7.7 PLL1 and PLL1 Controller

This section provides a description of the PLL1 controller. For details on the operation of the PLL controller module, see the *TMS320C6457 DSP Software-Programmable Phase-Locked Loop (PLL) Controller User's Guide* (literature number SPRUGL3).

Note—The PLL1 controller registers can be accessed by any master in the device.

The main PLL is controlled by the standard PLL controller. The PLL controller manages the clock ratios, alignment, and gating for the system clocks to the device. Figure 7-12 shows a block diagram of the PLL controller. The following paragraphs define the clocks and PLL controller parameters.

Figure 7-12 PLL1 and PLL1 Controller

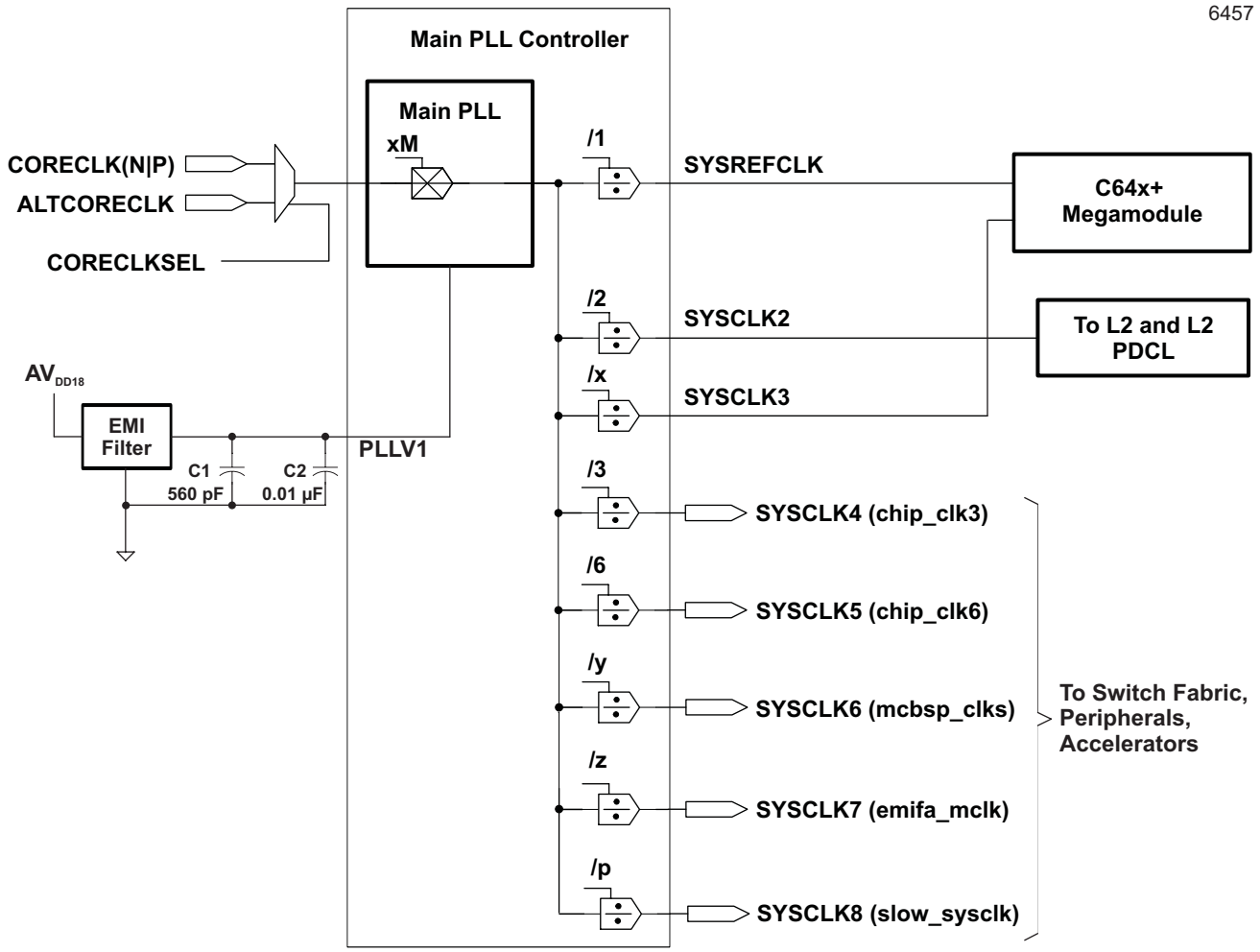

The inputs, multiply factor within the PLL, and post-division for each of the chip-level clocks from the PLL output. The PLL controller also controls reset propagation through the chip, clock alignment, and test points. The PLL controller monitors the PLL status and provides an output signal indicating when the PLL is locked.

PLL1 power is supplied externally via the PLL1 power-supply pin (PLLV1). An external EMI filter circuit must be added to PLLV1, as shown in Figure 7-12. The 1.8-V supply of the EMI filter must be from the same 1.8-V power plane supplying the I/O power-supply pin, DV_{DD18}. TI requires EMI filter manufacturer Murata, part number NFM18CC222R1C3 or NFM18CC223R1C3.

PRODUCT PREVIEW

All PLL external components (C1, C2, and the EMI Filter) must be placed as close to the C64x+ DSP device as possible. For the best performance, TI recommends that all the PLL external components be on a single side of the board without jumpers, switches, or components other than those shown. For reduced PLL jitter, maximize the spacing between switching signal traces and the PLL external components (C1, C2, and the EMI Filter).

The minimum CORECLK rise and fall times should also be observed. For the input clock timing requirements, see Section 7.7.4 "PLL1 Controller Input and Output Electrical Data/Timing".

CAUTION—The PLL controller module as described in the *TMS320C6457 DSP Software-Programmable Phase-Locked Loop (PLL) Controller User's Guide* (literature number SPRUGL3) includes a superset of features, some of which are not supported on the TMS320C6457TMS320C6457 DSP. The following sections describe the registers that are supported; it should be assumed that any registers not included in these sections is not supported by the C6457 DSP. Furthermore, only the bits within the registers described here are supported. Avoid writing to any reserved memory location or changing the value of reserved bits.

7.7.1 PLL1 Controller Device-Specific Information

7.7.1.1 Internal Clocks and Maximum Operating Frequencies

The main PLL, used to drive the core, the switch fabric, and a majority of the peripheral clocks (all but the DDR2 clock) requires a PLL controller to manage the various clock divisions, gating, and synchronization. The main PLL controller has several SYSCLK outputs that are listed below, along with the clock description. Each SYSCLK has a corresponding divider that divides down the output clock of the PLL. Note that dividers are not programmable unless explicitly mentioned in the description below.

- **SYSREFCLK:** Full-rate clock (GEM_CLK1) for C64x+ megamodule.
- **SYSCLK2:** 1/2-rate clock (GEM_L2_CLK) used to clock the L2 and L2 powerdown controller.
- **SYSCLK3:** 1/x-rate clock (GEM_TRACE_CLK) for emulation and trace logic of the DSP. The default rate for this clock is 1/3. This is programmable from /1 to /32, where this clock does not violate the maximum clock rate of 333 MHz. The data rate on the trace pins are 1/2 of this clock.
- **SYSCLK4:** 1/3-rate clock (CHIP_CLK3) for the switched central resources (SCRs), EDMA3, VCP2, TCP2_A, TCP2_B, SRIO, as well as the data bus interfaces of the EMIFA and DDR2 memory controller.
- **SYSCLK5:** 1/6-rate clock (CHIP_CLK6) for other peripherals (PLL controller, PSC, L3 ROM, McBSPs, Timer64s, EMAC, HPI, UTOPIA, I^2C, and GPIO).
- **SYSCLK6:** 1/y-rate clock (CHIP_CLKS) for an optional McBSP CLKS module input to drive the clock generator. The default for this clock is 1/10. This is programmable from /6 to /32, where this clock does not violate the maximum clock rate of 100 MHz. This clock is also output to the SYSCLKOUT pin.
- **SYSCLK7:** 1/z-rate clock (EMIF_MCLK) for an optional internal clock for EMIFA. The default for this clock is 1/10. This is programmable from /6 to /32, where this clock does not violate the maximum clock rate of 166 MHz. The data rate at the pins must not violate 100 MHz.
- **SYSCLK8:** 1/p-rate clock (SLOW_SYSCLK). The default for this clock is 1/10. This is programmable from /10 to /32.

Note—In case any of the other programmable SYSCLKs are set slower than 1/10 rate, then SYSCLK8 (SLOW_SYSCLK) needs to be programmed to either match, or be slower than, the slowest SYSCLK in the system.

PRODUCT PREVIEW

Note that there is a minimum and maximum operating frequency for CORECLK(N|P), ALTCORECLK, SYSREFCLK, SYSCLK3, SYSCLK6, and SYSCLK7. The PLL1 controller must not be configured to exceed any of these constraints (certain combinations of external core clock input, internal dividers, and PLL multiply ratios might not be supported). For the PLL clocks input and output frequency ranges, see Table 7-24.

Table 7-24 Timing Requirements for Reset

Clock SIgnal	Min	Max	Unit
CORECLK(N|P)	50	61.44	MHz
ALTCORECLK	50	61.44	MHz
SYSREFCLK	400	1200	MHz
SYSCLK3		333	MHz
SYSCLK6		100	MHz
SYSCLK7		166	MHz
End of Table 7-24			

PRODUCT PREVIEW

7.7.1.2 PLL1 Controller Operating Modes

The PLL1 controller has two modes of operation: bypass mode and PLL mode. The mode of operation is determined by the PLLEN bit of the PLL control register (PLLCTL). In PLL mode, SYSREFCLK is generated from the device input clock CORECLK(N|P) using the divider POSTDIV and the PLL multiplier PLLM. In bypass mode, CORECLK(N|P) is fed directly to SYSREFCLK.

All hosts (HPI, etc.) must hold off accesses to the DSP while the frequency of its internal clocks is changing. A mechanism must be in place such that the DSP notifies the host when the PLL configuration has completed.

7.7.1.3 PLL1 Stabilization, Lock, and Reset Times

The PLL stabilization time is the amount of time that must be allotted for the internal PLL regulators to become stable after device powerup. The PLL should not be operated until this stabilization time has expired.

The PLL reset time is the amount of wait time needed when resetting the PLL (writing PLLRST = 1), in order for the PLL to properly reset, before bringing the PLL out of reset (writing PLLRST = 0). For the PLL1 reset time value, see Table 7-25.

The PLL lock time is the amount of time needed from when the PLL is taken out of reset (PLLRST = 1 with PLLEN = 0) to when to when the PLL controller can be switched to PLL mode (PLLEN = 1). The PLL1 lock time is given in Table 7-25.

Table 7-25 PLL1 Stabilization, Lock, and Reset Times

	Min	Typ	Max	Unit
PLL stabilization time	100			µs
PLL lock time			2000 × C (1)	
PLL reset time	1000			ns
End of Table 7-25				

1 C = CORECLK(N|P) cycle time in ns.

7.7.2 PLL1 Controller Memory Map

The memory map of the PLL1 controller is shown in Table 7-26. Note that only registers documented here are accessible on the TMS320C6457. Other addresses in the PLL1 controller memory map should not be modified.

Table 7-26 PLL1 Controller Registers (Including Reset Controller)

Hex Address Range	Acronym	Register Name
029A 0000 - 029A 00E3	-	Reserved
029A 00E4	RSTYPE	Reset Type Status Register (Reset Controller)
029A 00E8	RSTCTRL	Software Reset Control Register
029A 00EC	RSTCFG	Reset Configuration Register
029A 00F0 - 029A 00FF	-	Reserved
029A 0100	PLLCTL	PLL Control Register
029A 0104	-	Reserved
029A 0108	-	Reserved
029A 010C	-	Reserved
029A 0110	PLLM	PLL Multiplier Control Register
029A 0114	-	Reserved
029A 0118	-	Reserved
029A 011C	-	Reserved
029A 0120	PLLDIV3	PLL Controller Divider 3 Register
029A 0124	-	Reserved
029A 0128	POSTDIV	PLL Post-Divider Register
029A 012C	-	Reserved
029A 0130	-	Reserved
029A 0134	-	Reserved
029A 0138	PLLCMD	PLL Controller Command Register
029A 013C	PLLSTAT	PLL Controller Status Register
029A 0140	ALNCTL	PLL Controller Clock Align Control Register
029A 0144	DCHANGE	PLLDIV Ratio Change Status Register
029A 0148	-	Reserved
029A 014C	-	Reserved
029A 0150	SYSTAT	SYSCLK Status Register
029A 0154	-	Reserved
029A 0158	-	Reserved
029A 015C	-	Reserved
029A 0160 - 029A 0164	-	Reserved
029A 0168	PLLDIV6	PLL Controller Divider 6 Register
029A 016C	PLLDIV7	PLL Controller Divider 7 Register
029A 0170	PLLDIV8	PLL Controller Divider 8 Register
029A 0174 - 029B FFFF	-	Reserved
End of Table 7-26		

PRODUCT PREVIEW

7.7.3 PLL1 Controller Registers

This section provides a description of the PLL1 controller registers. For details on the operation of the PLL controller module, see the *TMS320C6457 DSP Software-Programmable Phase-Locked Loop (PLL) Controller User's Guide* (literature number SPRUGL3).

Note—The PLL1 controller registers can be accessed by any master in the device.

CAUTION—Not all of the registers documented in the *TMS320C6457 DSP Software-Programmable Phase-Locked Loop (PLL) Controller User's Guide* (literature number SPRUGL3) are supported on the TMS320C6457. Only those registers documented in this section are supported. Furthermore, only the bits within the registers described here are supported. Avoid writing to any reserved memory location or changing the value of reserved bits.

7.7.3.1 PLL1 Control Register

The PLL1control register (PLLCTL) is shown in Table 7-27 and described in Table 7-28.

Table 7-27 PLL1 Control Register (PLLCTL)

Address - 029A 0100h																
Bit	31	30	29	28	27	26	25	24	23	22	21	20	19	18	17	16
Acronym	Reserved															
Reset (1)	R-0															
Bit	15	14	13	12	11	10	9	8	7	6	5	4	3	2	1	0
Acronym	Reserved								Reserved	Reserved	Reserved		PLLRST	Reserved	PLLPWRDN	PLLEN
Reset (1)	R-0								R/W-0	R-1	R/W-0		R/W-1	R-0	R/W-0	R/W-0

1 R/W = Read/Write; R = Read only; *-n* = value after reset

Table 7-28 PLL1 Control Register (PLLCTL) Field Descriptions

Bit	Acronym	Description
31:8	Reserved	Reserved. Read only. Always reads as 0. Writes have no effect.
7	Reserved	Reserved. Writes to this register must keep this bit as 0.
6	Reserved	Reserved. Read only. Always reads as 1. Writes have no effect.
5:4	Reserved	Reserved. Writes to this register must keep this bit as 0.
3	PLLRST	PLL reset bit 0 = PLL reset is released 1 = PLL reset is asserted
2	Reserved	Reserved. Read only. Always reads as 0. Writes have no effect.
1	PLLPWRDN	PLL power-down mode select bit 0 = PLL is operational 1 = PLL is placed in power-down state, i.e., all analog circuitry in the PLL is turned-off
0	PLLEN	PLL enable bit 0 = Bypass mode. Divider POSTDIV and PLL are bypassed. All the system clocks (SYSCLKn) are divided down directly from input reference clock. 1 = PLL mode. Divider POSTDIV and PLL are not bypassed. PLL output path is enabled. All the system clocks (SYSCLKn) are divided down from PLL output.
End of Table 7-28		

PRODUCT PREVIEW

7.7.3.2 PLL Multiplier Control Register

The PLL multiplier control register (PLLM) is shown in Table 7-29 and described in Table 7-30. The PLLM register defines the input reference clock frequency multiplier in conjunction with the PLL divider ratio bits (RATIO) in the PLL controller post-divider register (POSTDIV).

Table 7-29 PLL Multiplier Control Register (PLLM)

Address - 029A 0110h																
Bit	31	30	29	28	27	26	25	24	23	22	21	20	19	18	17	16
Acronym	Reserved															
Reset (1)	R-0															
Bit	15	14	13	12	11	10	9	8	7	6	5	4	3	2	1	0
Acronym	Reserved											PLLM				
Reset (1)	R-0											R/W-0				

1 R/W = Read/Write; R = Read only; -*n* = value after reset

Table 7-30 PLL Multiplier Control Register (PLLM) Field Descriptions

Bit	Acronym	Description
31:5	Reserved	Reserved. Read only. Always reads as 0. Writes have no effect.
4:0	PLLM	PLL multiplier bits. Defines the frequency multiplier of the input reference clock in conjunction with the PLL divider ratio bits (RATIO) in POSTDIV. • 000000 = × 1 • 010000 = × 17 • 100000 = × 33 • 110000 = × 49 • 000001 = × 2 • 010001 = × 18 • 100001 = × 34 • 110001 = × 50 • 000010 = × 3 • 010010 = × 19 • 100010 = × 35 • 110010 = × 51 • 000011 = × 4 • 010011 = × 20 • 100011 = × 36 • 110011 = × 52 • 000100 = × 5 • 010100 = × 21 • 100100 = × 37 • 110100 = × 53 • 000101 = × 6 • 010101 = × 22 • 100101 = × 38 • 110101 = × 54 • 000110 = × 7 • 010110 = × 23 • 100110 = × 39 • 110110 = × 55 • 000111 = × 8 • 010111 = × 24 • 100111 = × 40 • 110111 = × 56 • 001000 = × 9 • 011000 = × 25 • 101000 = × 41 • 111000 = × 57 • 001001 = × 10 • 011001 = × 26 • 101001 = × 42 • 111001 = × 58 • 001010 = × 11 • 011010 = × 27 • 101010 = × 43 • 111010 = × 59 • 001011 = × 12 • 011011 = × 28 • 101011 = × 44 • 111011 = × 60 • 001100 = × 13 • 011100 = × 29 • 101100 = × 45 • 111100 = × 61 • 001101 = × 14 • 011101 = × 30 • 101101 = × 46 • 111101 = × 62 • 001110 = × 15 • 011110 = × 31 • 101110 = × 47 • 111110 = × 63 • 001111 = × 16 • 011111 = × 32 • 101111 = × 48 • 111111 = × 64
End of Table 7-30		

7.7.3.3 PLL Post-Divider Control Register

The PLL post-divider control register (POSTDIV) is shown in Table 7-31 and described in Table 7-32.

Table 7-31 PLL Post-Divider Control Register (POSTDIV)

Address - 029A 0128																
Bit	31	30	29	28	27	26	25	24	23	22	21	20	19	18	17	16
Acronym	Reserved															
Reset (1)	R-0															
Bit	15	14	13	12	11	10	9	8	7	6	5	4	3	2	1	0
Acronym	POSTDEN	Reserved										RATIO				
Reset (1)	R/W-1	R-0										R/W-2h				

1 R/W = Read/Write; R = Read only; -*n* = value after reset

PRODUCT PREVIEW

Table 7-32 PLL Post-Divider Control Register (POSTDIV) Field Descriptions

Bit	Acronym	Description
31:16	Reserved	Reserved. Read only. Always reads as 0. Writes have no effect.
15	POSTDEN	Post-divider enable bit. 0 = Post-divider is disabled. No clock output. 1 = Post-divider is enabled.
14:5	Reserved	Reserved. Read only. Always reads as 0. Writes have no effect.
4:0	RATIO	0 through 1Fh are divider ratio bits: » 0 = ÷ 1. Divide frequency by 1. » 1h = ÷ 2. Divide frequency by 2. » 2h = ÷ 3. Divide frequency by 3. » 3h through 1Fh = Reserved, do not use.
End of Table 7-32		

PRODUCT PREVIEW

7.7.3.4 PLL Controller Divider 3 Register

The PLL controller divider 3 register (PLLDIV3) is shown in Table 7-33 and described in Table 7-34.

Table 7-33 PLL Controller Divider 3 Register (PLLDIV3)

Address - 029A 015Ch																
Bit	31	30	29	28	27	26	25	24	23	22	21	20	19	18	17	16
Acronym	Reserved															
Reset (1)	R-0															
Bit	15	14	13	12	11	10	9	8	7	6	5	4	3	2	1	0
Acronym	D3EN	Reserved										RATIO				
Reset (1)	R/W-1	R-0										R/W-2h				

1 R/W = Read/Write; R = Read only; *-n* = value after reset

Table 7-34 PLL Controller Divider 3 Register (PLLDIV3) Field Descriptions

Bit	Acronym	Description
31:16	Reserved	Reserved. Read only. Always reads as 0. Writes have no effect.
15	D3EN	Divider 3 enable bit. 0 = Divider 3 is disabled. No clock output. 1 = Divider 3 is enabled.
14:5	Reserved	Reserved. Read only. Always reads as 0. Writes have no effect.
4:0	RATIO	0 through 1Fh are divider ratio bits: » 0 = ÷ 1. Divide frequency by 1. » 1h = ÷ 2. Divide frequency by 2. » 2h = ÷ 3. Divide frequency by 3. » 3h = ÷ 4. Divide frequency by 4. » 4h through 1Fh = ÷ 5 to ÷ 32. Divide frequency by 5 to divide frequency by 32.
End of Table 7-34		

2009 Texas Instruments Incorporated

7.7.3.5 PLL Controller Divider 6 Register

The PLL controller divider 6 register (PLLDIV6) is shown in Table 7-35 and described in Table 7-36.

Table 7-35 PLL Controller Divider 6 Register (PLLDIV6)

Address - 029A 0168																
Bit	31	30	29	28	27	26	25	24	23	22	21	20	19	18	17	16
Acronym	Reserved															
Reset (1)	R-0															
Bit	15	14	13	12	11	10	9	8	7	6	5	4	3	2	1	0
Acronym	D6EN	Reserved										RATIO				
Reset (1)	R/W-1	R-0										R/W-9h				

1 R/W = Read/Write; R = Read only; -*n* = value after reset

Table 7-36 PLL Controller Divider 6 Register (PLLDIV6) Field Descriptions

Bit	Acronym	Description
31:16	Reserved	Reserved. Read only. Always reads as 0. Writes have no effect.
15	D6EN	Divider 6 enable bit. 0 = Divider 6 is disabled. No clock output. 1 = Divider 6 is enabled.
14:5	Reserved	Reserved. Read only. Always reads as 0. Writes have no effect.
4:0	RATIO	0 through 1Fh are divider ratio bits: » 0 = ÷ 1. Divide frequency by 1. » 1h = ÷ 2. Divide frequency by 2. » 2h = ÷ 3. Divide frequency by 3. » 3h = ÷ 4. Divide frequency by 4. » 4h through 1Fh = ÷ 5 to ÷ 32. Divide frequency by 5 to divide frequency by 32.
End of Table 7-36		

7.7.3.6 PLL Controller Divider 7 Register

The PLL controller divider 7 register (PLLDIV7) is shown in Table 7-37 and described in Table 7-38.

Table 7-37 PLL Controller Divider 7 Register (PLLDIV7)

Address - 029A 016Ch																
Bit	31	30	29	28	27	26	25	24	23	22	21	20	19	18	17	16
Acronym	Reserved															
Reset (1)	R-0															
Bit	15	14	13	12	11	10	9	8	7	6	5	4	3	2	1	0
Acronym	D7EN	Reserved										RATIO				
Reset (1)	R/W-1	R-0										R/W-9h				

1 R/W = Read/Write; R = Read only; -*n* = value after reset

Table 7-38 PLL Controller Divider 7 Register (PLLDIV7) Field Descriptions (Part 1 of 2)

Bit	Acronym	Description
31:16	Reserved	Reserved. Read only. Always reads as 0. Writes have no effect.
15	D7EN	Divider 7 enable bit. 0 = Divider 6 is disabled. No clock output. 1 = Divider 6 is enabled.

PRODUCT PREVIEW

Table 7-38 PLL Controller Divider 7 Register (PLLDIV7) Field Descriptions (Part 2 of 2)

Bit	Acronym	Description
14:5	Reserved	Reserved. Read only. Always reads as 0. Writes have no effect.
4:0	RATIO	0 through 1Fh are divider ratio bits: » 0 = ÷ 1. Divide frequency by 1. » 1h = ÷ 2. Divide frequency by 2. » 2h = ÷ 3. Divide frequency by 3. » 3h = ÷ 4. Divide frequency by 4. » 4h through 1Fh = ÷ 5 to ÷ 32. Divide frequency by 5 to divide frequency by 32.
End of Table 7-38		

7.7.3.7 PLL Controller Divider 8 Register

The PLL controller divider 8 register (PLLDIV7) is shown in Table 7-39 and described in Table 7-40.

Table 7-39 PLL Controller Divider 8 Register (PLLDIV8)

Address - 029A 0170																
Bit	31	30	29	28	27	26	25	24	23	22	21	20	19	18	17	16
Acronym	Reserved															
Reset (1)	R-0															
Bit	15	14	13	12	11	10	9	8	7	6	5	4	3	2	1	0
Acronym	D8EN	Reserved										RATIO				
Reset (1)	R/W-1	R-0										R/W-9h				

1 R/W = Read/Write; R = Read only; *-n* = value after reset

Table 7-40 PLL Controller Divider 8 Register (PLLDIV8) Field Descriptions

Bit	Acronym	Description
31:16	Reserved	Reserved. Read only. Always reads as 0. Writes have no effect.
15	D8EN	Divider 8 enable bit. 0 = Divider 6 is disabled. No clock output. 1 = Divider 6 is enabled.
14:5	Reserved	Reserved. Read only. Always reads as 0. Writes have no effect.
4:0	RATIO	0 through 1Fh are divider ratio bits: » 0 = ÷ 1. Divide frequency by 1. » 1h = ÷ 2. Divide frequency by 2. » 2h = ÷ 3. Divide frequency by 3. » 3h = ÷ 4. Divide frequency by 4. » 4h through 1Fh = ÷ 5 to ÷ 32. Divide frequency by 5 to divide frequency by 32.
End of Table 7-40		

PRODUCT PREVIEW

7.7.3.8 PLL Controller Command Register

The PLL controller command register (PLLCMD) contains the command bit for GO operation. PLLCMD is shown in Table 7-41 and described in Table 7-42.

Table 7-41 PLL Controller Command Register (PLLCMD)

Address - 029A 0138h																
Bit	31	30	29	28	27	26	25	24	23	22	21	20	19	18	17	16
Acronym	Reserved															
Reset (1)	R-0															
Bit	15	14	13	12	11	10	9	8	7	6	5	4	3	2	1	0
Acronym	Reserved														Reserved	GOSET
Reset (1)	R-0														R/W-0	R/W-0

1 R/W = Read/Write; R = Read only; *-n* = value after reset

Table 7-42 PLL Controller Command Register (PLLCMD) Field Descriptions

Bit	Acronym	Description
31:2	Reserved	Reserved. Read only. Always reads as 0. Writes have no effect.
1	Reserved	Reserved. Read only. Always reads as 0. Writes have no effect.
0	GOSET	GO operation command for SYSCLK rate change and phase alignment. Before setting this bit to 1 to initiate a GO operation, check the GOSTAT bit in the PLLSTAT register to ensure all previous GO operations have completed. 0 = No effect. Write of 0 clears bit to 0. 1 = Initiates GO operation. Write of 1 initiates GO operation. Once set, GOSET remains set but further writes of 1 can initiate the GO operation.
End of Table 7-42		

7.7.3.9 PLL Controller Status Register

The PLL controller status register (PLLSTAT) shows the PLL controller status. PLLSTAT is shown in Table 7-43 and described in Table 7-44.

Table 7-43 PLL Controller Status Register (PLLSTAT)

Address - 029A 013C																
Bit	31	30	29	28	27	26	25	24	23	22	21	20	19	18	17	16
Acronym	Reserved															
Reset (1)	R-0															
Bit	15	14	13	12	11	10	9	8	7	6	5	4	3	2	1	0
Acronym	Reserved															GOSTAT
Reset (1)	R-0															R-0

1 R/W = Read/Write; R = Read only; *-n* = value after reset

Table 7-44 PLL Controller Status Register (PLLSTAT) Field Descriptions

Bit	Acronym	Description
31:1	Reserved	Reserved. Read only. Always reads as 0. Writes have no effect.
0	GOSTAT	GO operation status. 0 = GO operation is not in progress. SYSCLK divide ratios are not being changed. 1 = GO operation is in progress. SYSCLK divide ratios are being changed.
End of Table 7-44		

PRODUCT PREVIEW

PRODUCT PREVIEW

7.7.3.10 PLL Controller Clock Align Control Register

The PLL controller clock align control register (ALNCTL) is shown in Table 7-45 and described in Table 7-46.

Table 7-45 PLL Controller Clock Align Control Register (ALNCTL)

Address - 029A 0140																
Bit	31	30	29	28	27	26	25	24	23	22	21	20	19	18	17	16
Acronym	Reserved															
Reset (1)	R-0															
Bit	15	14	13	12	11	10	9	8	7	6	5	4	3	2	1	0
Acronym	Reserved											ALN5	ALN4	Reserved		
Reset (1)	R-0											R-1	R-1	R-1		

1 R/W = Read/Write; R = Read only; -*n* = value after reset

Table 7-46 PLL Controller Clock Align Control Register (ALNCTL) Field Descriptions

Bit	Acronym	Description
31:5	Reserved	Reserved. Read only. Always reads as 0. Writes have no effect.
4:3	ALN*n*	SYSCLK*n* alignment. Do not change the default values of these fields. 0 = Do not align SYSCLK*n* to other SYSCLKs during GO operation. If SYS*n* in DCHANGE is set to 1, SYSCLK*n* switches to the new ratio immediately after the GOSET bit in PLLCMD is set. 1 = Align SYSCLK*n* to other SYSCLKs selected in ALNCTL when the GOSET bit in PLLCMD is set. The SYSCLK*n* ratio is set to the ratio programmed in the RATIO bit in PLLDIV*n*
2:0	Reserved	Reserved. Read only. Always reads as 0. Writes have no effect.
End of Table 7-46		

7.7.3.11 PLLDIV Ratio Change Status Register

Whenever a different ratio is written to the PLLDIVn registers, the PLLCTL flags the change in the PLLDIV ratio change status registers (DCHANGE). During the GO operation, the PLL controller will change the divide ratio of only the SYSCLKs with the bit set in DCHANGE. Note that changed clocks will be automatically aligned to other clocks. The PLLDIV divider ratio change status register is shown in Table 7-47 and described in Table 7-48.

Table 7-47 PLLDIV Divider Ratio Change Status Register (DCHANGE)

Address - 029A 0144																
Bit	31	30	29	28	27	26	25	24	23	22	21	20	19	18	17	16
Acronym	Reserved															
Reset (1)	R-0															
Bit	15	14	13	12	11	10	9	8	7	6	5	4	3	2	1	0
Acronym	Reserved											SYS5	SYS4	Reserved		
Reset (1)	R-0											R-0	R-0	R-0		

1 R/W = Read/Write; R = Read only; -*n* = value after reset

Table 7-48 PLLDIV Divider Ratio Change Status Register (DCHANGE) Field Descriptions (Part 1 of 2)

Bit	Acronym	Description
31:5	Reserved	Reserved. Read only. Always reads as 0. Writes have no effect.
4	SYS5	Identifies when the SYSCLK5 divide ratio has been modified. 0 = SYSCLK5 ratio has not been modified. When GOSET is set, SYSCLK5 will not be affected. 1 = SYSCLK5 ratio has been modified. When GOSET is set, SYSCLK5 will change to the new ratio.

2009 Texas Instruments Incorporated

Table 7-48 PLLDIV Divider Ratio Change Status Register (DCHANGE) Field Descriptions (Part 2 of 2)

Bit	Acronym	Description
3	SYS4	Identifies when the SYSCLK4 divide ratio has been modified. 0 = SYSCLK4 ratio has not been modified. When GOSET is set, SYSCLK4 will not be affected. 1 = SYSCLK4 ratio has been modified. When GOSET is set, SYSCLK4 will change to the new ratio.
2:0	Reserved	Reserved. Read only. Always reads as 0. Writes have no effect.
End of Table 7-48		

7.7.3.12 SYSCLK Status Register

The SYSCLK status register (SYSTAT) shows the status of the system clocks (SYSCLKn). SYSTAT is shown in Table 7-49 and described in Table 7-50.

Table 7-49 SYSCLK Status Register (SYSTAT)

Address - 029A 0150																
Bit	31	30	29	28	27	26	25	24	23	22	21	20	19	18	17	16
Acronym	Reserved															
Reset (1)	R-0															
Bit	15	14	13	12	11	10	9	8	7	6	5	4	3	2	1	0
Acronym	Reserved											SYS5ON	SYS4ON	SYS3ON	SYS2ON	Reserved
Reset (1)	R-0											R-1	R-1	R-1	R-1	R-1

1 R/W = Read/Write; R = Read only; -*n* = value after reset

Table 7-50 SYSCLK Status Register (SYSTAT) Field Descriptions

Bit	Acronym	Description
31:4	Reserved	Reserved. Read only. Always reads as 0. Writes have no effect.
4:1	SYS*n*ON	SYSCLK*n* on status. 0 = SYSCLK*n* is gated. 1 = SYSCLK*n* is on.
0:	Reserved	Reserved. Read only. Always reads as 1. Writes have no effect.
End of Table 7-50		

7.7.4 PLL1 Controller Input and Output Electrical Data/Timing

Table 7-51 CORECLK(N|P) and ALTCORECLK Timing Requirements (1)

No.			Min	Max	Unit
		CORECLK(N|P) and ALTCORECLK			
1	$t_{c(SYSCLK)}$	Cycle time, CORECLK(N|P) or ALTCORECLK	16.27	20.00	ns
2	$t_{w(SYSCLKH)}$	Pulse duration, CORECLK(N|P) or ALTCORECLK high	0.45 x C_1		ns
3	$t_{w(SYSCLKL)}$	Pulse duration, CORECLK(N|P) or ALTCORECLK low	0.45 x C_1		ns
4	$t_{t(SYSCLK)}$	Transition time, CORECLK(N|P) or ALTCORECLK	50	1300	ps
5	$t_{j(SYSCLK)}$	Period Jitter (peak-to-peak), CORECLK(N|P) or ALTCORECLK		100	ps
		SYSCLKOUT			
1	$t_{c(CKO)}$	Cycle time, SYSCLKOUT	10 x C_1	32 x C_1	ns
2	$t_{w(CKOH)}$	Pulse duration, SYSCLKOUT high	4 x C_1 - 0.7	32 x C_1 + 0.7	ns
3	$t_{w(CKOL)}$	Pulse duration, SYSCLKOUT low	4 x C_1 - 0.7	32 x C_1 + 0.7	ns
4	$t_{t(CKO)}$	Transition time, SYSCLKOUT		1.0	ns
End of Table 7-51					

1 If CORECLKSEL = 0, C_1 = CORECLK(N|P) cycle time in ns. If CORECLKSEL = 1, C_1 = ALTCORECLK cycle time in ns.

PRODUCT PREVIEW

Figure 7-13 CORECLK(N|P) and ALTCORECLK Timing

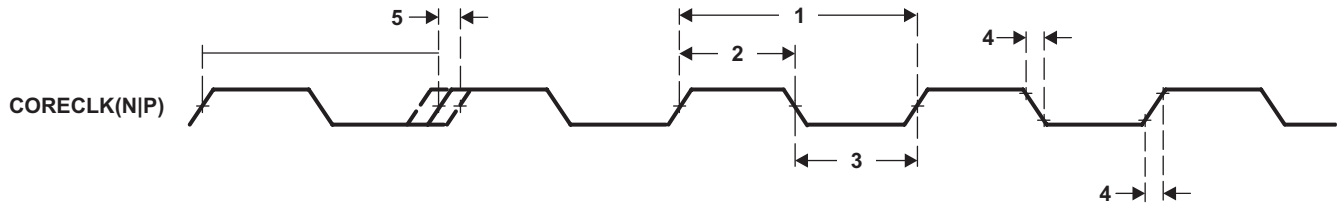

7.8 PLL2

The secondary PLL generates interface clocks for the DDR2 memory controller. Using the DDRCLKSEL pin the user can select the input source of PLL2 as either the DDRREFCLK or the ALTDDRCLK clock reference sources.

When coming out of power-on reset, PLL2 is enabled and initialized.

As shown in Figure 7-14, the PLL2 multiplier is fixed at a ×10 multiplier rate followed by a fixed /2 divider resulting in an effective x5 multiplier going to the DDR2PHY and attached DDR2 memory.

Figure 7-14 PLL2 Block Diagram

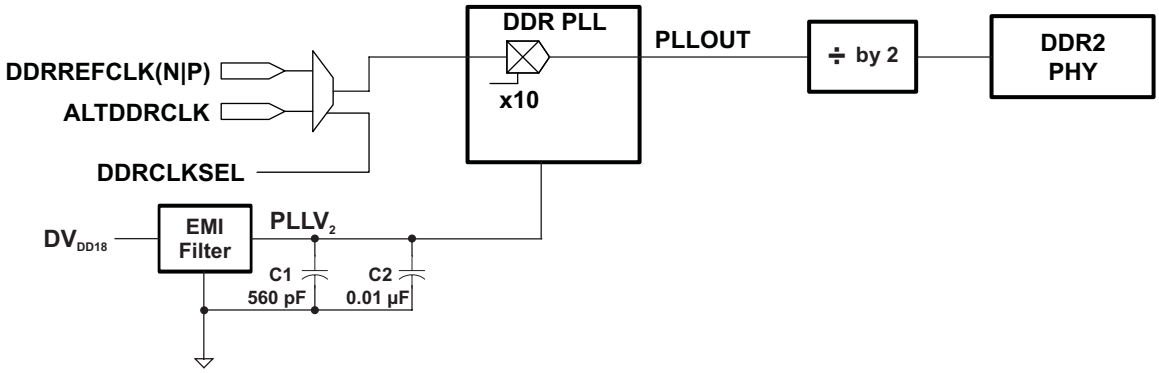

PLL2 power is supplied externally via the PLL2 power supply ($PLLV_2$). An external PLL filter circuit must be added to $PLLV_2$ as shown in Figure 7-14. The 1.8-V supply for the EMI filter must be from the same 1.8-V power plane supplying the I/O power-supply pin, DV_{DD18}. TI requires EMI filter manufacturer Murata NFM18CC222R1C3 or NFM18CC223R1C3. For more information on the external PLL filter or the EMI filter, see the *TMS320TCI6484 and TMS320C6457 DSPs Hardware Design Guide* (literature number SPRAAV7).

All PLL external components (capacitors and the EMI filter) should be placed as close to the C64x+ DSP device as possible. For the best performance, TI requires that all the PLL external components be on a single side of the board without jumpers, switches, or components other than the ones shown. For reduced PLL jitter, maximize the spacing between switching signal traces and the PLL external components (capacitors and the EMI filter). The minimum CLKIN2 rise and fall times should also be observed.

7.8.1 PLL2 Device-Specific Information

7.8.1.1 Internal Clocks and Maximum Operating Frequencies

As shown in Figure 7-14, the output of PLL2, PLLOUT, is divided by 2 and directly fed to the DDR2 memory controller. This clock is used by the DDR2 memory controller to generate DDR2CLKOUT(N|P)0 and DDR2CLKOUT(N|P)1. Note that, internally, the data bus interface of the DDR2 memory controller is clocked by SYSCLK4 and PLL1 controller.

PRODUCT PREVIEW

Note that there is a minimum and maximum operating frequency for DDRREFCLK and associated DDR2CLKOUT(N|P)0 and DDR2CLKOUT(N|P)1. For the PLL clocks input and output frequency ranges, see Table 7-52.

Table 7-52 PLL2 Clock Frequency Ranges

Signal	Min	Max	Unit
DDRREFCLK (PLLEN = 1)	40	66.67	MHz
DDR2CLKOUT0(P|N) and DDR2CLKOUT1(P|N)	200	333	MHz
End of Table 7-52			

7.8.1.2 PLL2 Operating Modes

Unlike the PLL1 which can operate in by-pass and PLL mode, the PLL2 only operates in PLL mode. In PLL mode, DDR2CLKOUT0(P|N) and DDR2CLKOUT1 (P|N) are generated by an effective x5 multiplier consisting of the PLL2 fixed x10 multiplier followed by a /2 divider.

The PLL2 is affected by power-on reset. During power-on resets, the internal clocks of the PLL2 are affected as described in Section 7.6 "Reset Controller" on page 123.

PLL2 is unlocked only during the power-up sequence (see Section 7.6 "Reset Controller" on page 123) and is locked by the time the RESETSTAT pin goes high. It does not lose lock during any of the other reset

7.8.2 PLL2 Input Clock Electrical Data/Timing

Table 7-53 Timing Requirements for DDRREFCLK(N|P) and ALTDDRCLK (1)
(see Figure 7-15)

No.			Min	Max	Unit
1	$t_{c(CLKIN2)}$	Cycle time, DDRREFCLK(N|P) or ALTDDRCLK	15.00	25.00	ns
2	$t_{w(CLKIN2H)}$	Pulse duration, DDRREFCLK(N|P) or ALTDDRCLK high	0.45 × C_2	0.55 × C_2	ns
3	$t_{w(CLKIN2L)}$	Pulse duration, DDRREFCLK(N|P) or ALTDDRCLK low	0.45 × C_2	0.55 × C_2	ns
4	$t_{t(CLKIN2)}$	Transition time, DDRREFCLK(N|P) or ALTDDRCLK	50	1300	ps
5	$t_{J(CLKIN2)}$	Period jitter (peak-to-peak), DDRREFCLK(N|P) or ALTDDRCLK		0.02 × $tc_{(CLKIN2)}$	
End of Table 7-53					

1 If DDRCLKSEL = 0, C_2 = DDRREFCLK(N|P) cycle time in ns. If DDRCLKSEL = 1, C_2 = ALTDDRCLK cycle time in ns.

Figure 7-15 DDRREFCLK(N|P) Timing

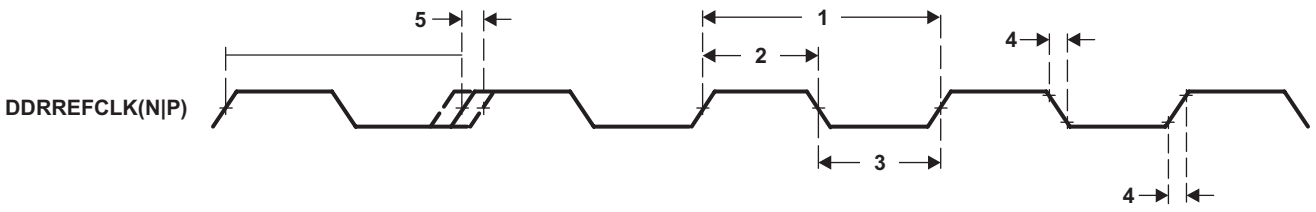

PRODUCT PREVIEW

7.9 DDR2 Memory Controller

The 32-bit DDR2 Memory Controller bus of the TMS320C6457 is used to interface to JESD79-2B standard-compliant DDR2 SDRAM devices. The DDR2 external bus interfaces only to DDR2 SDRAM devices; it does not share the bus with any other types of peripherals. The decoupling of DDR2 memories from other devices both simplifies board design and provides I/O concurrency from a second external memory interface, EMIFA.

The internal data bus clock frequency and DDR2 bus clock frequency directly affect the maximum throughput of the DDR2 bus. The clock frequency of the DDR2 bus is equal to the CLKIN2 frequency multiplied by 10. The internal data bus clock frequency of the DDR2 Memory Controller is fixed at a divide-by-three ratio of the CPU frequency. The maximum DDR2 throughput is determined by the smaller of the two bus frequencies. The DDR2 bus is designed to sustain a throughput of up to 2.67 Gbyte/sec at a 667-MHz data rate (333-MHz clock rate) as long as data requests are pending in the DDR2 Memory Controller.

PRODUCT PREVIEW

7.9.1 DDR2 Memory Controller Device-Specific Information

The approach to specifying interface timing for the DDR2 memory bus is different than on other interfaces such as EMIF, McBSP, and HPI. For these other interfaces, the device timing was specified in terms of data manual specifications and I/O buffer information specification (IBIS) models.

For the C6457 DDR2 memory bus, the approach is to specify compatible DDR2 devices and provide the printed circuit board (PCB) solution and guidelines directly to the user. Texas Instruments (TI) has performed the simulation and system characterization to ensure all DDR2 interface timings in this solution are met. The complete DDR2 system solution is documented in the *TMS320C6457 DDR2 Implementation Guidelines* application report (literature number SPRAB21).

TI supports only designs that follow the board design guidelines outlined in the application report.

The DDR2 memory controller on the C6457 device supports the following memory topologies:

- A 32-bit wide configuration interfacing to two 16-bit wide DDR2 SDRAM devices.
- A 16-bit wide configuration interfacing to a single 16-bit wide DDR2 SDRAM device.

A race condition may exist when certain masters write data to the DDR2 memory controller. For example, if master A passes a software message via a buffer in external memory and does not wait for indication that the write completes, when master B attempts to read the software message, then the master B read may bypass the master A write and, thus, master B may read stale data and, therefore, receive an incorrect message.

Some master peripherals (e.g., EDMA3 transfer controllers) will always wait for the write to complete before signaling an interrupt to the system, thus avoiding this race condition. For masters that do not have a hardware specification of write-read ordering, it may be necessary to specify data ordering via software.

If master A does not wait for indication that a write is complete, it must perform the following workaround:

1. Perform the required write.
2. Perform a dummy write to the DDR2 memory controller module ID and revision register.
3. Perform a dummy read to the DDR2 memory controller module ID and revision register.
4. Indicate to master B that the data is ready to be read after completion of the read in step 3. The completion of the read in step 3 ensures that the previous write was done.

 2009 Texas Instruments Incorporated

7.9.2 DDR2 Memory Controller Peripheral Register Description(s)

Table 7-54 DDR2 Memory Controller Registers

Hex Address Range	Acronym	Register Name
7800 0000	MIDR	DDR2 Memory Controller Module and Revision Register
7800 0004	DMCSTAT	DDR2 Memory Controller Status Register
7800 0008	SDCFG	DDR2 Memory Controller SDRAM Configuration Register
7800 000C	SDRFC	DDR2 Memory Controller SDRAM Refresh Control Register
7800 0010	SDTIM1	DDR2 Memory Controller SDRAM Timing 1 Register
7800 0014	SDTIM2	DDR2 Memory Controller SDRAM Timing 2 Register
7800 0018	-	Reserved
7800 0020	BPRIO	DDR2 Memory Controller Burst Priority Register
7800 0024 - 7800 004C	-	Reserved
7800 0050 - 7800 0078	-	Reserved
7800 007C - 7800 00BC	-	Reserved
7800 00C0 - 7800 00E0	-	Reserved
7800 00E4	DMCCTL	DDR2 Memory Controller Control Register
7800 00E8 - 7FFF FFFF	-	Reserved
End of Table 7-54		

7.9.3 DDR2 Memory Controller Electrical Data/Timing

The *TMS320C6457 DDR2 Implementation Guidelines* application report (literature number SPRAB21) specifies a complete DDR2 interface solution for the C6457 as well as a list of compatible DDR2 devices. TI has performed the simulation and system characterization to ensure all DDR2 interface timings in this solution are met; therefore, no electrical data/timing information is supplied here for this interface.

Note—TI supports ***only*** designs that follow the board design guidelines outlined in the application report.

7.10 External Memory Interface A (EMIFA)

The EMIFA can interface to a variety of external devices or ASICs, including:

- Pipelined and flow-through synchronous-burst SRAM (SBSRAM)
- ZBT (zero bus turnaround) SRAM and late write SRAM
- Synchronous FIFOs
- Asynchronous memory, including SRAM, ROM, and Flash

For more information about the EMIF peripheral, see the *TMS320C6457 DSP External Memory Interface (EMIF) User's Guide* (literature number SPRUGK2).

7.10.1 EMIFA Device-Specific Information

Timing analysis must be done to verify all AC timings are met. TI recommends using I/O buffer information specification (IBIS) to analyze all AC timings.

To properly use IBIS models to attain accurate timing analysis for a given system, see the *Using IBIS Models for Timing Analysis* application report (literature number SPRA839).

To maintain signal integrity, serial termination resistors should be inserted into all EMIF output signal lines (for the EMIF output signals, see Table 2-6 "Terminal Functions" on page 33).

PRODUCT PREVIEW

A race condition may exist when certain masters write data to the EMIFA. For example, if master A passes a software message via a buffer in external memory and does not wait for indication that the write completes, when master B attempts to read the software message, then the master B read may bypass the master A write and, thus, master B may read stale data and, therefore, receive an incorrect message.

Some master peripherals (e.g., EDMA3 transfer controllers) will always wait for the write to complete before signaling an interrupt to the system, thus avoiding this race condition. For masters that do not have a hardware specification of write-read ordering, it may be necessary to specify data ordering via software.

If master A does not wait for indication that a write is complete, it must perform the following workaround:

1. Perform the required write.
2. Perform a dummy write to the EMIFA module ID and revision register.
3. Perform a dummy read to the EMIFA module ID and revision register.
4. Indicate to master B that the data is ready to be read after completion of the read in step 3. The completion of the read in step 3 ensures that the previous write was done.

PRODUCT PREVIEW

7.10.2 EMIFA Peripheral Register Description(s)

Table 7-55 EMIFA Registers

Hex Address Range	Acronym	Register Name
7000 0000	MIDR	Module ID and Revision Register
7000 0004	STAT	Status Register
7000 0008	-	Reserved
7000 000C - 7000 001C	-	Reserved
7000 0020	BURST_PRIO	Burst Priority Register
7000 0024 - 7000 004C	-	Reserved
7000 0050 - 7000 007C	-	Reserved
7000 0080	CE2CFG	EMIFA CE2 Configuration Register
7000 0084	CE3CFG	EMIFA CE3 Configuration Register
7000 0088	CE4CFG	EMIFA CE4 Configuration Register
7000 008C	CE5CFG	EMIFA CE5 Configuration Register
7000 0090 - 7000 009C	-	Reserved
7000 00A0	AWCC	EMIFA Async Wait Cycle Configuration Register
7000 00A4 - 7000 00BC	-	Reserved
7000 00C0	INTRAW	EMIFA Interrupt RAW Register
7000 00C4	INTMSK	EMIFA Interrupt Masked Register
7000 00C8	INTMSKSET	EMIFA Interrupt Mask Set Register
7000 00CC	INTMSKCLR	EMIFA Interrupt Mask Clear Register
7000 00D0 - 7000 00DC	-	Reserved
7000 00E0 - 77FF FFFF	-	Reserved
End of Table 7-55		

7.10.3 EMIFA Electrical Data/Timing

This section describes the electrical timing for the EMIFA peripheral.

7.10.3.1 AECLKIN and AECLKOUT Timing

Table 7-56 EMIFA AECLKIN Timing Requirements (1) (2)
(see Figure 7-16)

No.			Min	Max	Unit
1	$t_{c(EKI)}$	Cycle time, AECLKIN	10 (3)	40	ns
2	$t_{w(EKIH)}$	Pulse duration, AECLKIN high	2.7		ns
3	$t_{w(EKIL)}$	Pulse duration, AECLKIN low	2.7		ns
4	$t_{t(EKI)}$	Transition time, AECLKIN		2	ns
5	$t_{j(EKI)}$	Period Jitter, AECLKIN		0.02E (4)	ns
End of Table 7-56					

1 The reference points for the rise and fall transitions are measured at V_{IL} MAX and V_{IH} MIN.
2 E = the EMIF input clock (AECLKIN or SYSCLK7) period in ns for EMIFA.
3 Minimum AECLKIN cycle times must be met, even when AECLKIN is generated by an internal clock source. Minimum AECLKIN times are based on internal logic speed; the maximum usable speed of the EMIF may be lower due to AC timing requirements.
4 This timing applies only when AECLKIN is used for EMIFA.

Figure 7-16 EMIFA AECLKIN Timing

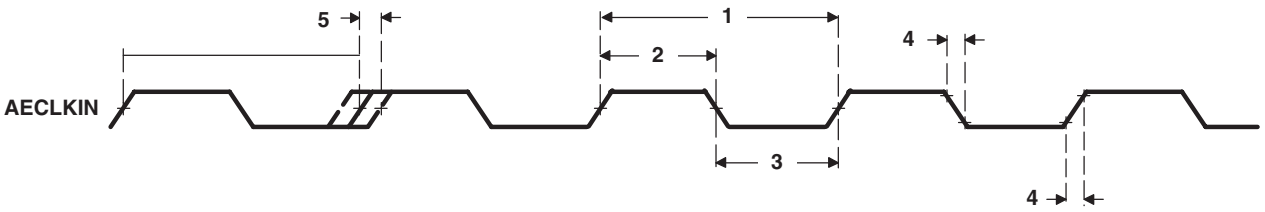

Table 7-57 EMIFA AECLKOUT Switching Characteristics (1) (2) (3) (4)
(see Figure 7-17)

No.		Parameter	Min	Max	Unit
1	$t_{c(EKO)}$	Cycle time, AECLKOUT	E - 0.7	E + 0.7	ns
2	$t_{w(EKOH)}$	Pulse duration, AECLKOUT high	EH - 0.7	EH + 0.7	ns
3	$t_{w(EKOL)}$	Pulse duration, AECLKOUT low	EL - 0.7	EL + 0.7	ns
4	$t_{t(EKO)}$	Transition time, AECLKOUT		1	ns
5	$t_{d(EKIH-EKOH)}$	Delay time, AECLKIN high to AECLKOUT high	1	8	ns
6	$t_{d(EKIL-EKOL)}$	Delay time, AECLKIN low to AECLKOUT low	1	8	ns
End of Table 7-57					

1 Over Recommended Operating Conditions.
2 E = the EMIF input clock (AECLKIN or SYSCLK7) period in ns for EMIFA.
3 The reference points for the rise and fall transitions are measured at V_{OL} MAX and V_{OH} MIN.
4 EH is the high period of E (EMIF input clock period) in ns and EL is the low period of E (EMIF input clock period) in ns for EMIFA.

Figure 7-17 EMIFA AECLKOUT Timing

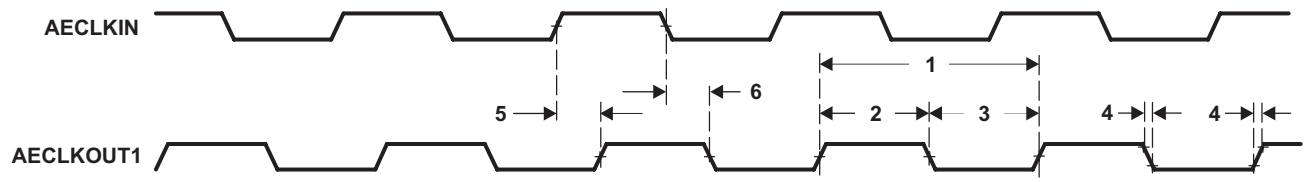

PRODUCT PREVIEW

PRODUCT PREVIEW

7.10.3.2 Asynchronous Memory Timing

This section describes the asynchronous EMIFA Read, Write, EM_WAIT Read and EM_WAIT Write timing requirements and switching characteristics.

Table 7-58 EMIFA Asynchronous Memory Read Switching Characteristics [1] [2]
(see Figure 7-18)

No.	Parameter		Min	Max	Unit
3	$t_{c(ACEL\text{-}read)}$	EMIF read cycle time when ew = 0. Meaning not in extended wait mode	(RS + RST + RH + 3) × E - 1	(RS + RST + RH + 3) × E + 1	ns
		EMIF read cycle time when ew = 1. Meaning extended wait mode enabled	(RS + RST + RH + 3) × E - 1	(RS + RST + RH + 3) × E + 1	ns
4	$t_{osu(ACEL\text{-}AAOEL)}$	Output setup time from $\overline{ACEn}$ low to $\overline{AAOE}$/$\overline{ASOE}$ low. SS = 0, not in select strobe mode	(RS+1) × E-1.5		ns
		Output setup time from $\overline{ACEn}$ low to $\overline{AAOE}$/$\overline{ASOE}$ low. SS = 1, in select strobe mode			
5	$t_{oh(AAOEH\text{-}ACEH)}$	Output hold time from $\overline{AAOE}$/$\overline{ASOE}$ high to $\overline{ACEn}$ high. SS = 0, not in select strobe mode	(RS+1) × E-1.9		ns
		Output hold time from $\overline{AAOE}$/$\overline{ASOE}$ high to $\overline{ACEn}$ high. SS = 1, in select strobe mode			
6	$t_{osu(ABAV\text{-}AAOEL)}$	Output setup time from ABA valid to $\overline{AAOE}$/$\overline{ASOE}$ low	(RS+1) × E-1.5		ns
7	$t_{oh(AAOEH\text{-}ABAV)}$	Output hold time from $\overline{AAOE}$/$\overline{ASOE}$ high to BA invalid	(RS+1) × E-1.9		ns
8	$t_{osu(AEAV\text{-}OEL)}$	Output setup time from AEA valid to $\overline{AAOE}$/$\overline{ASOE}$ low	(RS+1) × E-1.5		ns
9	$t_{oh(AAOEH\text{-}AEAV)}$	Output hold time from $\overline{AAOE}$/$\overline{ASOE}$ high to AEA invalid	(RS+1) × E-1.9		ns
10	$t_{w(AAOEL)}$	$\overline{AAOE}$/$\overline{ASOE}$ active time low, when ew = 0, extended wait mode is disabled	(RST+1) × E - 6	(RST+1) × E + 6	ns
		$\overline{AAOE}$/$\overline{ASOE}$ active time low, when ew = 1, extended wait mode is enabled			
End of Table 7-58					

1 E = the EMIF input clock (AECLKIN or SYSCLK7) period in ns for EMIFA.
2 RS, RST, RH, WS, WST, WH, and TA are all based on the memory mapped register values. This means that the actual value listed here is the value in EMIF cycles - 1. Example: For read setup of 1 EMIF cycle, RS = 0.

Table 7-59 EMIFA Asynchronous Memory Read Timing Requirements
(see Figure 7-18)

No.			Min	Max	Unit
12	$t_{su(AEDV\text{-}AAOEH)}$	Input setup time from AED valid to $\overline{AAOE}$/$\overline{ASOE}$ high	6.5		ns
13	$t_{h(AAOEH\text{-}AEDV)}$	Input hold time from $\overline{AAOE}$/$\overline{ASOE}$ high to AED invalid	0		ns
End of Table 7-59					

 2009 Texas Instruments Incorporated

Figure 7-18 EMIFA Asynchronous Memory Read Timing

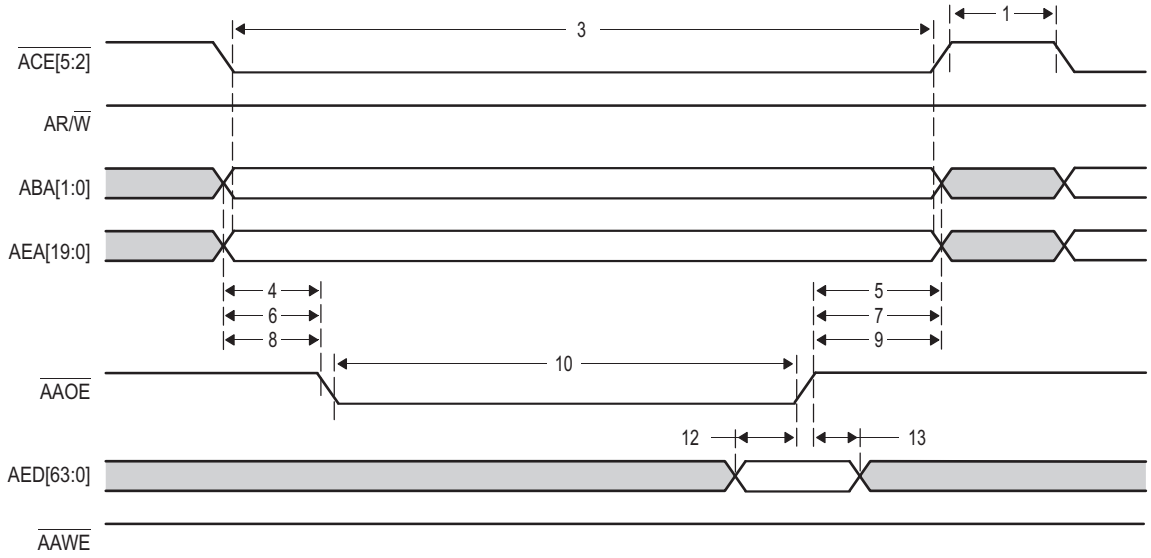

Table 7-60 EMIFA Asynchronous Memory Write Timing Requirements (1) (2)
(see Figure 7-19)

No.			Min	Max	Unit
15	$t_{c(ACEL\text{-}write)}$	EMIF write cycle time when ew = 0, extended wait mode	(WS + WST + WH + TA + 4) × E - 1	(WS + WST + WH + TA + 4) × E + 1	ns
		EMIF write cycle time when ew = 1, extended wait mode is enabled.			
16	$t_{osu(ACEL\text{-}AAWEL)}$	Output setup time from $\overline{ACEn}$ low to $\overline{ASWE}/\overline{AAWE}$ low. SS = 0, not in select strobe mode	(WS+1) × E-1.7		ns
		Output setup time from $\overline{ACEn}$ low to $\overline{ASWE}/\overline{AAWE}$ low. SS = 1, in select strobe mode			
17	$t_{oh(AAWEH\text{-}ACEH)}$	Output hold time from $\overline{ASWE}/\overline{AAWE}$ high to $\overline{ACEn}$ high. SS = 0, not in select strobe mode	(WS+1) × E-1.8		ns
		Output hold time from $\overline{ASWE}/\overline{AAWE}$ high to $\overline{ACEn}$ high. SS = 1, in select strobe mode			
18	$t_{osu(WV\text{-}AAWEL)}$	Output setup time from AR/$\overline{W}$ valid to $\overline{ASWE}/\overline{AAWE}$ low	(WS+1) × E-1.7		ns
19	$t_{oh(AAWEH\text{-}WIV)}$	Output hold time from $\overline{ASWE}/\overline{AAWE}$ high to AR/$\overline{W}$ invalid	(WS+1) × E-1.8		ns
20	$t_{osu(ABAV\text{-}AAWEL)}$	Output setup time from BA valid to $\overline{ASWE}/\overline{AAWE}$ low	(WS+1) × E-1.7		ns
21	$t_{oh(AAWEH\text{-}ABAIV)}$	Output hold time from $\overline{ASWE}/\overline{AAWE}$ high to ABA invalid	(WS+1) × E-1.8		ns
22	$t_{osu(AEAV\text{-}AAWEL)}$	Output setup time from $\overline{AEA}$ valid to $\overline{ASWE}/\overline{AAWE}$ low	(WS+1) × E-1.7		ns
23	$t_{oh(AAWEH\text{-}AEAIV)}$	Output hold time from $\overline{ASWE}/\overline{AAWE}$ high to $\overline{AEA}$ invalid	(WS+1) × E-1.8		ns
24	$t_{w(AAWEL)}$	$\overline{ASWE}/\overline{AAWE}$ active time low, when ew = 0. Extended wait mode is disabled.	(WST+1) × E - 5.8		ns
		$\overline{ASWE}/\overline{AAWE}$ active time low, when ew = 1. Extended wait mode is enabled.			
26	$t_{osu(AEDV\text{-}AAWEL)}$	Output setup time from AED valid to $\overline{ASWE}/\overline{AAWE}$ low	(WS+1) × E-5.0		ns
27	$t_{oh(AAWEH\text{-}AEDIV)}$	Output hold time from $\overline{ASWE}/\overline{AAWE}$ high to AED invalid	(WS+1) × E-2.5		ns
End of Table 7-60					

1 E = the EMIF input clock (AECLKIN or SYSCLK7) period in ns for EMIFA.
2 RS, RST, RH, WS, WST, WH, and TA are all based on the memory mapped register values. This means that the actual value listed here is the value in EMIF cycles - 1. Example: For read setup of 1 EMIF cycle, RS = 0.

PRODUCT PREVIEW

PRODUCT PREVIEW

Figure 7-19 EMIFA Asynchronous Memory Write Timing

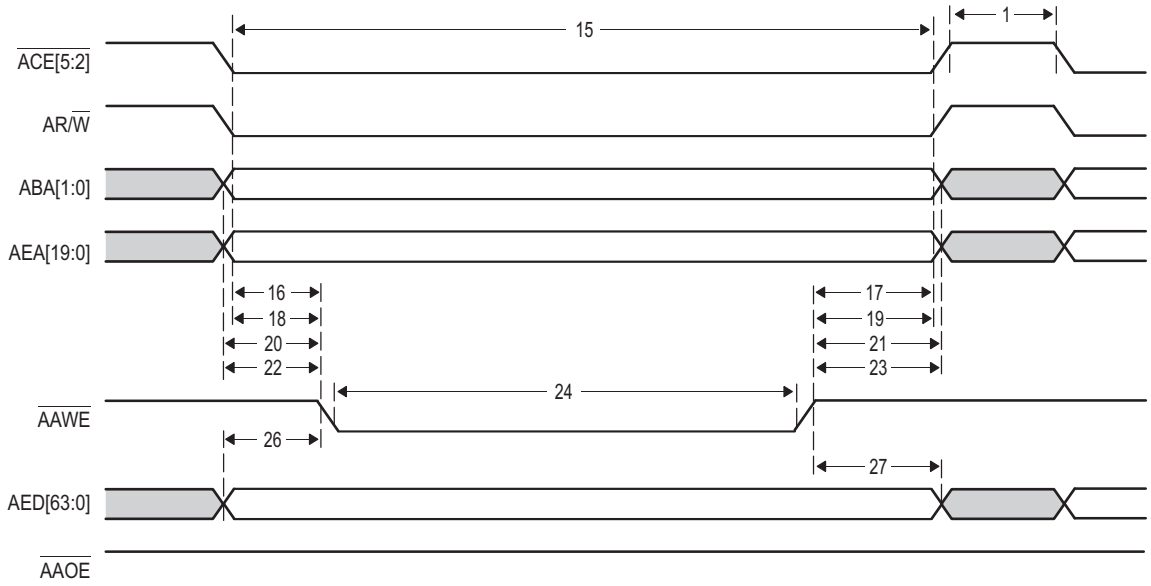

Table 7-61 EMIFA EM_Wait Read Timing Requirements [1]
(see Figure 7-20)

No.			Min	Max	Unit
2	$t_{w(AARDY)}$	Pulse duration, AARDY assertion and deassertion minimum time		2E	
14	$t_{d(AARDY-AAOEH)}$	Setup time, AARDY asserted before AAOE high		4E + 6	
End of Table 7-61					

1 E = the EMIF input clock (AECLKIN or SYSCLK7) period in ns for EMIFA.

Table 7-62 EMIFA EM_Wait Read Switching Characteristics [1]
(see Figure 7-20)

No.	Parameter		Min	Max	Unit
11	$t_{d(AARDYH-AAOEH)}$	Delay time from AARDY deasserted to $\overline{AAOE}$/$\overline{ASOE}$ high		4E + 6	
End of Table 7-62					

1 E = the EMIF input clock (AECLKIN or SYSCLK7) period in ns for EMIFA.

Figure 7-20 EMIFA EM_Wait Read Timing

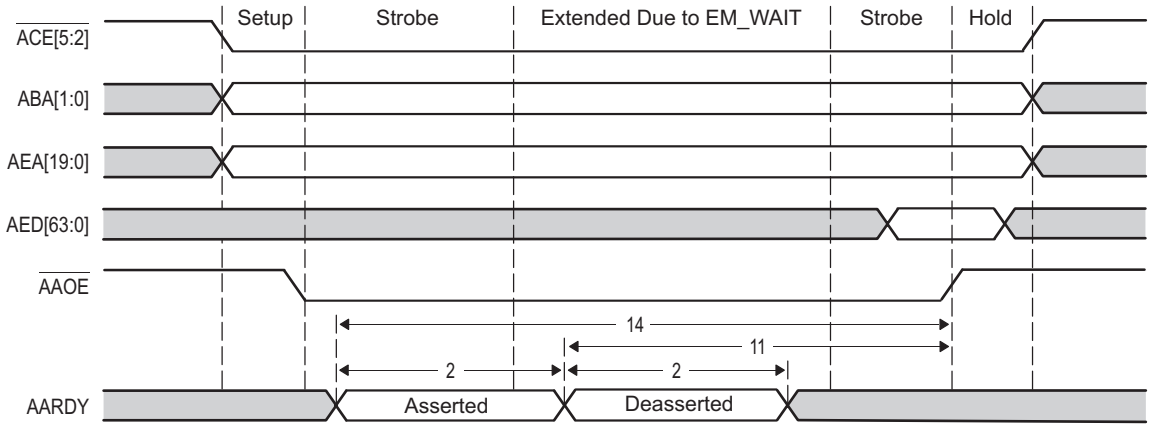

 2009 Texas Instruments Incorporated

Table 7-63 EMIFA EM_Wait Write Timing Requirements
(see Figure 7-21)

No.			Min	Nom	Max	Unit
2	$t_{w(AARDY)}$	Pulse duration, AARDY assertion and deassertion minimum time			2E	
25	$t_{d(AARDYH-AAWEH)}$	Delay time from AARDY deasserted to $\overline{ASWE}/\overline{AAWE}$ high		4E + 6.0		
28	$t_{su(AARDY-AAWEH)}$	Setup time, AARDY asserted before $\overline{ASWE}/\overline{AAWE}$ high		4E + 6.0		
End of Table 7-63						

Figure 7-21 EMIFA EM_Wait Write Timing

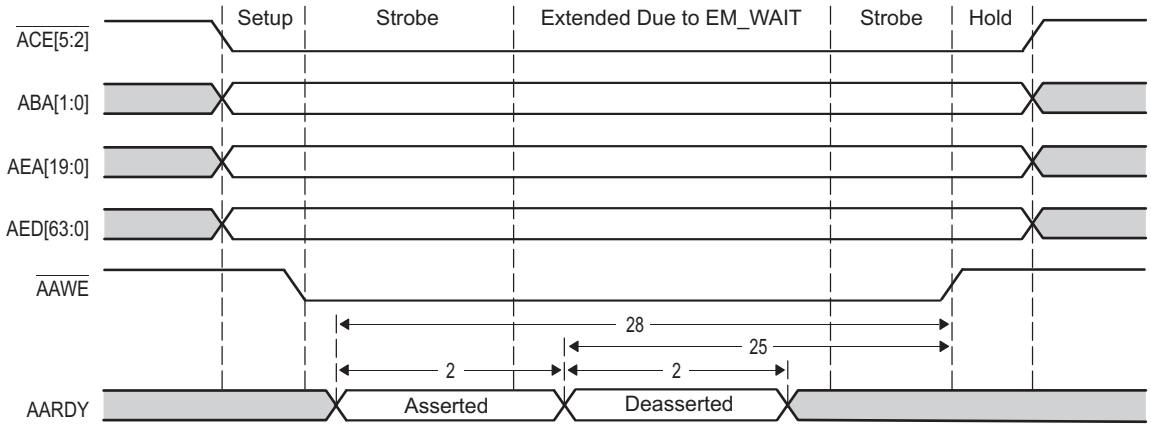

7.10.3.3 Programmable Synchronous Interface Timing

This section describes the synchronous EMIFA Read and Write timing requirements.

The following parameters are programmable via the EMIFA CE Configuration registers (CEnCFG) (see Table 7-65) and via the EMIFA Chip Select *n* Configuration Register (CESECn):

- **Read latency (R_LTNCY):** 1-, 2-, or 3-cycle read latency
- **Write latency (W_LTNCY):** 0-, 1-, 2-, or 3-cycle write latency
- **$\overline{ACE}$x assertion length (CE_EXT):** For standard SBSRAM or ZBT SRAM interface, $\overline{ACE}$x goes inactive after the final command has been issued (CE_EXT = 0). For synchronous FIFO interface, ACEx is active when ASOE is active (CE_EXT = 1).
- **Function of $\overline{ASADS}/\overline{ASRE}$ (R_ENABLE):** For standard SBSRAM or ZBT SRAM interface, $\overline{ASADS}/\overline{ASRE}$ acts as $\overline{ASADS}$ with deselect cycles (R_ENABLE = 0). For FIFO interface, $\overline{ASADS}/\overline{ASRE}$ acts as $\overline{SRE}$ with NO deselect cycles (R_ENABLE = 1).

Figure 7-22, Figure 7-23, and Figure 7-24 are given as examples diagrams depicting some of the programmable options.

- In Figure 7-22, R_LTNCY = 2, CE_EXT = 0, R_ENABLE = 0, and SSEL = 1.
- In Figure 7-23, W_LTNCY = 0, CE_EXT = 0, R_ENABLE = 0, and SSEL = 1.
- In Figure 7-24, W_LTNCY = 1, CE_EXT = 0, R_ENABLE = 0, and SSEL = 1.

Table 7-64 Timing Requirements for Programmable Synchronous Interface Cycles for EMIFA Module
(see Figure 7-22)

No.			Min	Max	Unit
6	$t_{su(EDV-EKOH)}$	Setup time, read AEDx valid before AECLKOUT high	2		ns
7	$t_{h(EKOH-EDV)}$	Hold time, read AEDx valid after AECLKOUT high	1.5		ns
End of Table 7-64					

PRODUCT PREVIEW

PRODUCT PREVIEW

Table 7-65 Switching Characteristics for Programmable Synchronous Interface Cycles for EMIFA Module [1]
(see Figure 7-22, Figure 7-23, and Figure 7-24)

No.	Parameter		Min	Max	Unit
1	$t_{d(EKOH-CEV)}$	Delay time, AECLKOUT high to $\overline{ACEx}$ valid	1.3	4.9	ns
2	$t_{d(EKOH-BEV)}$	Delay time, AECLKOUT high to $\overline{ABEx}$ valid		4.9	ns
3	$t_{d(EKOH-BEIV)}$	Delay time, AECLKOUT high to $\overline{ABEx}$ invalid	1.3		ns
4	$t_{d(EKOH-EAV)}$	Delay time, AECLKOUT high to AEAx valid		4.9	ns
5	$t_{d(EKOH-EAIV)}$	Delay time, AECLKOUT high to AEAx invalid	1.3		ns
8	$t_{d(EKOH-ADSV)}$	Delay time, AECLKOUT high to $\overline{ASADS}/\overline{ASRE}$ valid	1.3	4.9	ns
9	$t_{d(EKOH-OEV)}$	Delay time, AECLKOUT high to $\overline{ASOE}$ valid	1.3	4.9	ns
10	$t_{d(EKOH-EDV)}$	Delay time, AECLKOUT high to AEDx valid		5.2	ns
11	$t_{d(EKOH-EDIV)}$	Delay time, AECLKOUT high to AEDx invalid	1.3		ns
12	$t_{d(EKOH-WEV)}$	Delay time, AECLKOUT high to $\overline{ASWE}$ valid	1.3	4.9	ns
End of Table 7-65					

1 Over recommended operating conditions.

Figure 7-22 EMIFA Programmable Synchronous Interface Read Timing (With Read Latency = 2)[A]

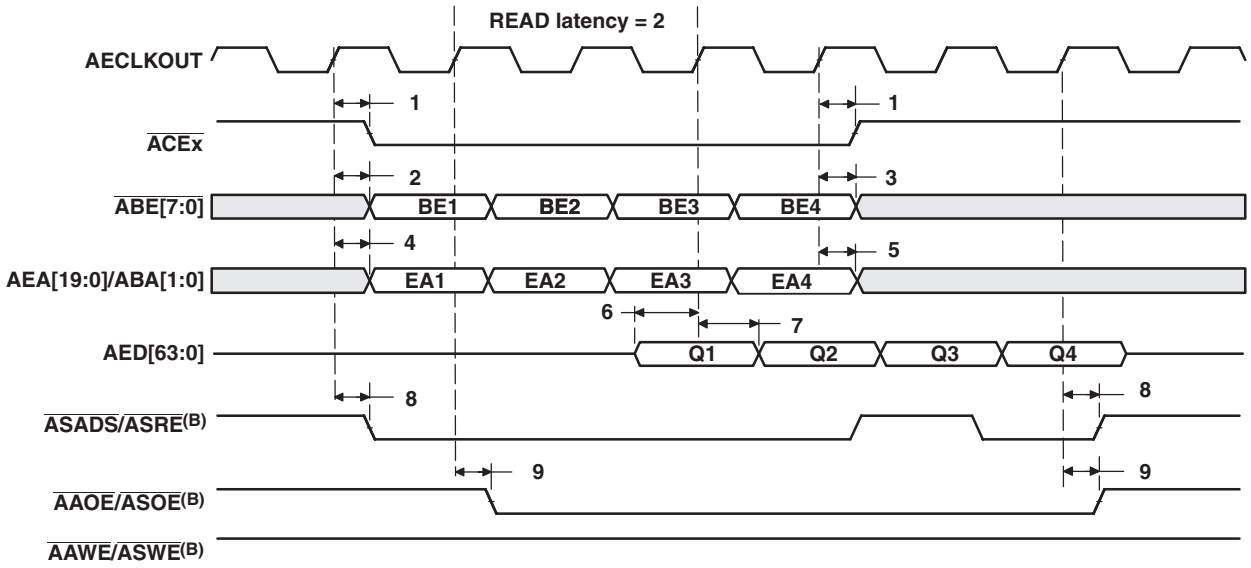

(A) In this figure R_LTNCY = 2, CE_EXT = 0, R_ENABLE = 0, and SSEL = 1.
(B) $\overline{AAOE}/\overline{ASOE}$, and $\overline{AAWE}/\overline{ASWE}$ operate as $\overline{ASOE}$, and $\overline{ASWE}$, respectively, during programmable synchronous interface accesses.

 2009 Texas Instruments Incorporated

Figure 7-23 EMIFA Programmable Synchronous Interface Write Timing (With Write Latency = 0) (A)

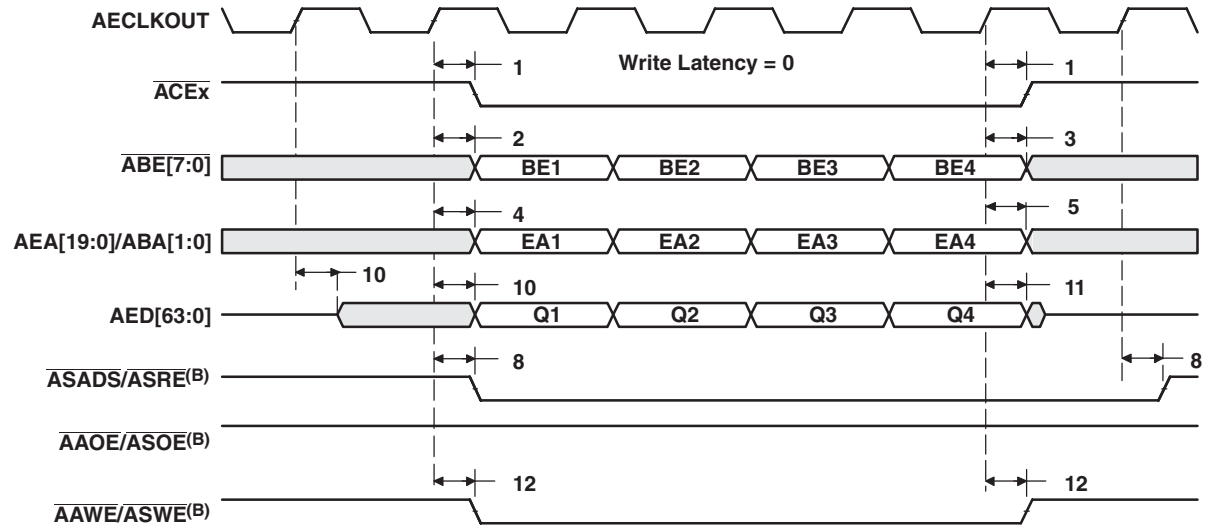

(A) In this figure W_LTNCY = 0, CE_EXT = 0, R_ENABLE = 0, and SSEL = 1.
(B) AAOE/ASOE, and AAWE/ASWE operate as ASOE, and ASWE, respectively, during programmable synchronous interface accesses.

Figure 7-24 EMIFA Programmable Synchronous Interface Write Timing (With Write Latency = 1) (A)

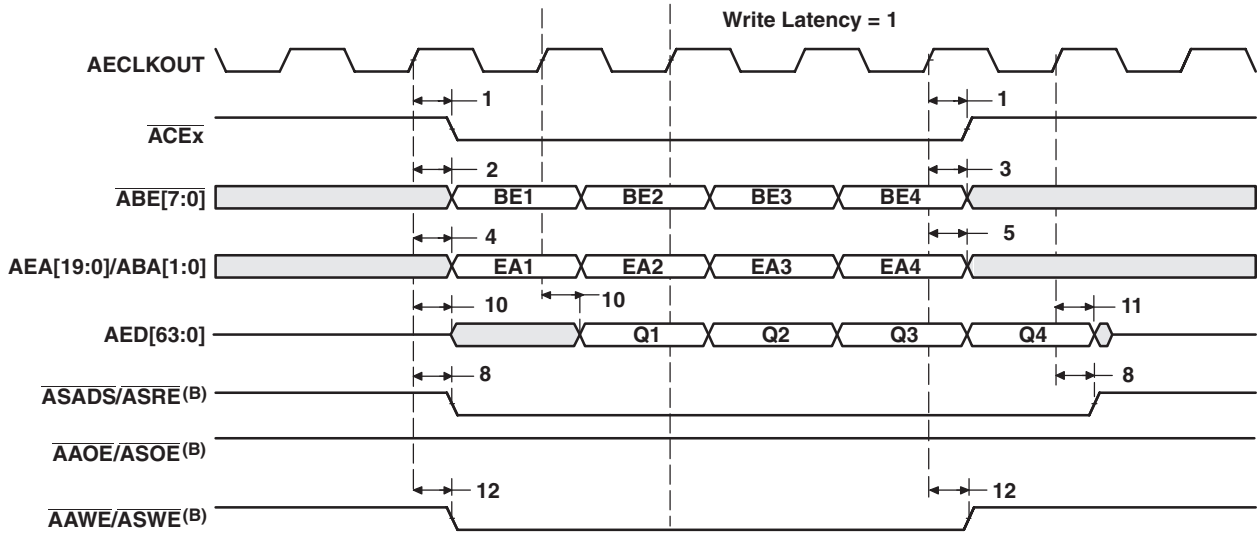

(A) In this figure W_LTNCY = 1, CE_EXT = 0, R_ENABLE = 0, and SSEL = 1.
(B) AAOE/ASOE, and AAWE/ASWE operate as ASOE, and ASWE, respectively, during programmable synchronous interface accesses.

PRODUCT PREVIEW

7.11 I²C Peripheral

The inter-integrated circuit (I^2C) module provides an interface between a C64x+ DSP and other devices compliant with Philips Semiconductors Inter-IC bus (I^2C bus) specification version 2.1 and connected by way of an I^2C bus. External components attached to this 2-wire serial bus can transmit/receive up to 8-bit data to/from the DSP through the I^2C module.

7.11.1 I²C Device-Specific Information

The TMS320C6457 device includes an I^2C peripheral module. NOTE: when using the I^2C module, ensure there are external pullup resistors on the SDA and SCL pins.

The I^2C modules on the C6457 may be used by the DSP to control local peripheral ICs (DACs, ADCs, etc.) or may be used to communicate with other controllers in a system or to implement a user interface.

The I^2C port supports:

- Compatible with Philips I^2C specification revision 2.1 (January 2000)
- Fast mode up to 400 Kbps (no fail-safe I/O buffers)
- Noise filter to remove noise 50 ns or less
- 7-bit and 10-bit device addressing modes
- Multi-master (transmit/receive) and slave (transmit/receive) functionality
- Events: DMA, interrupt, or polling
- Slew-rate limited open-drain output buffers

PRODUCT PREVIEW

Figure 7-25 shows a block diagram of the I2C module.

Figure 7-25 I2C Module Block Diagram

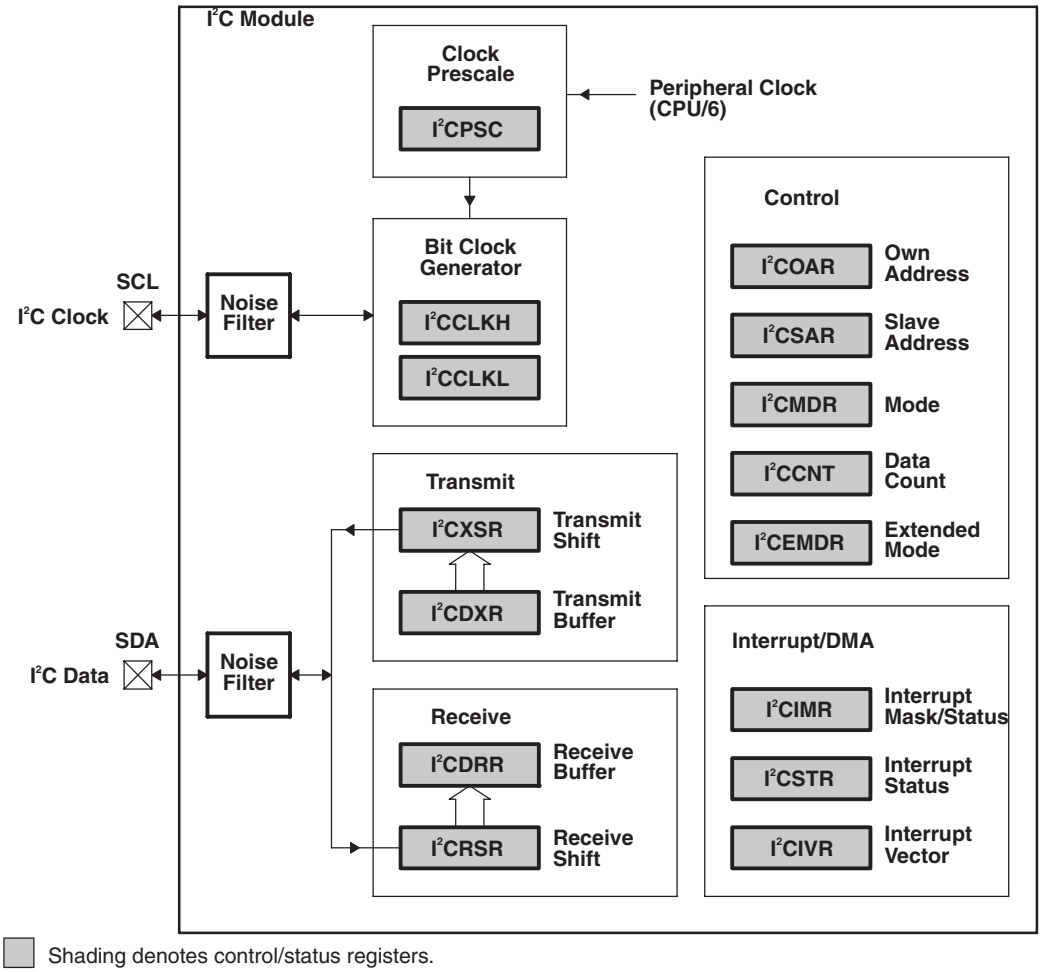

7.11.2 I2C Peripheral Register Description(s)

Table 7-66 I2C Registers (Part 1 of 2)

Hex Address Range	Acronym	Register Name
02B0 4000	ICOAR	I2C own address register
02B0 4004	ICIMR	I2C interrupt mask/status register
02B0 4008	ICSTR	I2C interrupt status register
02B0 400C	ICCLKL	I2C clock low-time divider register
02B0 4010	ICCLKH	I2C clock high-time divider register
02B0 4014	ICCNT	I2C data count register
02B0 4018	ICDRR	I2C data receive register
02B0 401C	ICSAR	I2C slave address register
02B0 4020	ICDXR	I2C data transmit register
02B0 4024	ICMDR	I2C mode register
02B0 4028	ICIVR	I2C interrupt vector register
02B0 402C	ICEMDR	I2C extended mode register
02B0 4030	ICPSC	I2C prescaler register

PRODUCT PREVIEW

Table 7-66 I²C Registers (Part 2 of 2)

Hex Address Range	Acronym	Register Name
02B0 4034	ICPID1	I²C peripheral identification register 1 [Value: 0x0000 0105]
02B0 4038	ICPID2	I²C peripheral identification register 2 [Value: 0x0000 0005]
02B0 403C - 02B0 405C	-	Reserved
02B0 4060 - 02B3 407F	-	Reserved
02B0 4080 - 02B3 FFFF	-	Reserved
End of Table 7-66		

7.11.3 I²C Electrical Data/Timing

7.11.3.1 Inter-Integrated Circuits (I²C) Timing

Table 7-67 I²C Timing Requirements (1)
(see Figure 7-26)

No.			Standard Mode		Fast Mode		Units
			Min	Max	Min	Max	
1	$t_{c(SCL)}$	Cycle time, SCL	10		2.5		us
2	$t_{su(SCLH-SDAL)}$	Setup time, SCL high before SDA low (for a repeated START condition)	4.7		0.6		us
3	$t_{h(SDAL-SCLL)}$	Hold time, SCL low after SDA low (for a START and a repeated START condition)	4		0.6		us
4	$t_{w(SCLL)}$	Pulse duration, SCL low	4.7		1.3		us
5	$t_{w(SCLH)}$	Pulse duration, SCL high	4		0.6		us
6	$t_{su(SDAV-SCLH)}$	Setup time, SDA valid before SCL high	250		100 (2)		ns
7	$t_{h(SCLL-SDAV)}$	Hold time, SDA valid after SCL low (For I²C bus devices)	0 (3)	3.45	0 (3)	0.9 (4)	us
8	$t_{w(SDAH)}$	Pulse duration, SDA high between STOP and START conditions	4.7		1.3		us
9	$t_{r(SDA)}$	Rise time, SDA		1000	$20 + 0.1C_b$ (5)	300	ns
10	$t_{r(SCL)}$	Rise time, SCL		1000	$20 + 0.1C_b$ (5)	300	ns
11	$t_{f(SDA)}$	Fall time, SDA		300	$20 + 0.1C_b$ (5)	300	ns
12	$t_{f(SCL)}$	Fall time, SCL		300	$20 + 0.1C_b$ (5)	300	ns
13	$t_{su(SCLH-SDAH)}$	Setup time, SCL high before SDA high (for STOP condition)	4		0.6		us
14	$t_{w(SP)}$	Pulse duration, spike (must be suppressed)			0	50	ns
15	C_b (5)	Capacitive load for each bus line		400		400	pF
End of Table 7-67							

1 The I²C pins SDA and SCL do not feature fail-safe I/O buffers. These pins could potentially draw current when the device is powered down

2 A Fast-mode I²C-bus™ device can be used in a Standard-mode I²C-bus™ system, but the requirement tsu(SDA-SCLH) ≥ 250 ns must then be met. This will automatically be the case if the device does not stretch the LOW period of the SCL signal. If such a device does stretch the LOW period of the SCL signal, it must output the next data bit to the SDA line t_r max + $t_{su(SDA-SCLH)}$ = 1000 + 250 = 1250 ns (according to the Standard-mode I²C-Bus Specification) before the SCL line is released.

3 A device must internally provide a hold time of at least 300 ns for the SDA signal (referred to the V_{IHmin} of the SCL signal) to bridge the undefined region of the falling edge of SCL.

4 The maximum $t_{h(SDA-SCLL)}$ has only to be met if the device does not stretch the low period [$t_{w(SCLL)}$] of the SCL signal.

5 C_b = total capacitance of one bus line in pF. If mixed with HS-mode devices, faster fall-times are allowed.

PRODUCT PREVIEW

2009 Texas Instruments Incorporated

Figure 7-26 I^2C Receive Timing

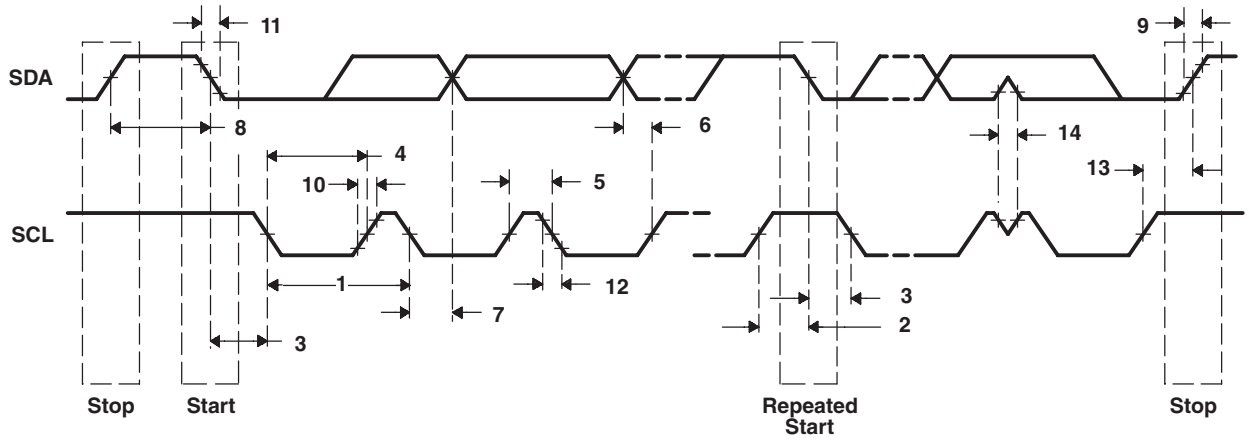

Table 7-68 I^2C Switching Characteristics (1)
(see Figure 7-27)

No.	Parameter		Standard Mode		Fast Mode		Unit
			Min	Max	Min	Max	
16	$t_{c(SCL)}$	Cycle time, SCL	10		2.5		ms
17	$t_{su(SCLH-SDAL)}$	Setup time, SCL high to SDA low (for a repeated START condition)	4.7		0.6		ms
18	$t_{h(SDAL-SCLL)}$	Hold time, SDA low after SCL low (for a START and a repeated START condition)	4		0.6		ms
19	$t_{w(SCLL)}$	Pulse duration, SCL low	4.7		1.3		ms
20	$t_{w(SCLH)}$	Pulse duration, SCL high	4		0.6		ms
21	$t_{d(SDAV-SDLH)}$	Delay time, SDA valid to SCL high	250		100		ns
22	$t_{v(SDLL-SDAV)}$	Valid time, SDA valid after SCL low (For I^2C bus devices)	0		0	0.9	ms
23	$t_{w(SDAH)}$	Pulse duration, SDA high between STOP and START conditions	4.7		1.3		ms
24	$t_{r(SDA)}$	Rise time, SDA		1000	$20 + 0.1C_b$ (1)	300	ns
25	$t_{r(SCL)}$	Rise time, SCL		1000	$20 + 0.1C_b$ (1)	300	ns
26	$t_{f(SDA)}$	Fall time, SDA		300	$20 + 0.1C_b$ (1)	300	ns
27	$t_{f(SCL)}$	Fall time, SCL		300	$20 + 0.1C_b$ (1)	300	ns
28	$t_{d(SCLH-SDAH)}$	Delay time, SCL high to SDA high (for STOP condition)	4		0.6		ms
29	C_p	Capacitance for each I^2C pin		10		10	pF

End of Table 7-68

1 C_b = total capacitance of one bus line in pF. If mixed with HS-mode devices, faster fall-times are allowed.

PRODUCT PREVIEW

Figure 7-27 I^2C Transmit Timing

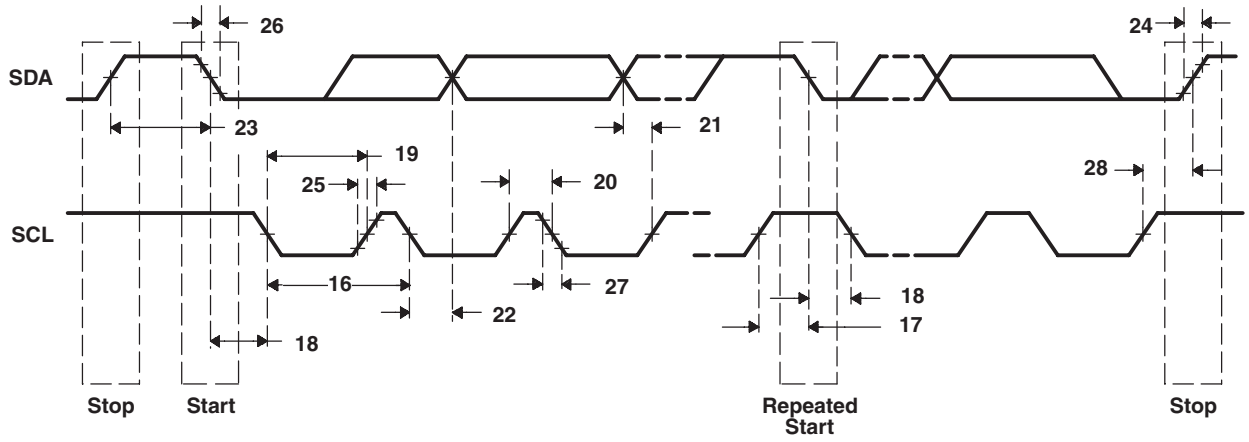

7.12 Host-Port Interface (HPI) Peripheral

7.12.1 HPI Device-Specific Information

The TMS320C6457 device includes a user-configurable 16-bit or 32-bit Host-port interface (HPI16/HPI32). The HPIWIDTH pin allows the user configuration of the HPI as a 16-bit or 32-bit peripheral.

Table 7-69 HPIWIDTH Selection

Configuration Pin Setting	Peripheral Function Selected	
HPIWIDTH	HPI Data Lower	HPI Data Upper
0 (default is HPI16 mode)	Enabled	Hi-Z
1 (HPI32 mode)	Enabled	Enabled
End of Table 7-69		

Software handshaking via the HRDY bit of the Host Port Control Register (HPIC) is not supported on the C6457.

An HPI boot is terminated using a DSP interrupt. The DSP interrupt is registered in bit 0 (channel 0) of the EDMA Event Register (ER). This event must be cleared by software before triggering transfers on DMA channel 0.

7.12.2 HPI Peripheral Register Description(s)

Table 7-70 HPI Control Registers (Part 1 of 2)

Hex Address Range	Acronym	Register Name	Comments
0288 0000	-	Reserved	
0288 0004	PWREMU_MGMT	HPI power and emulation management register	The CPU has read/write access to the PWREMU_MGMT register; the Host does not have any access to this register.
0288 0008 - 0288 0024	-	Reserved	
0288 0028	-	Reserved	
0288 002C	-	Reserved	
0288 0030	HPIC	HPI control register	The Host and the CPU have read/write access to the HPIC register. (1)
0288 0034	HPIA (HPIAW) (2)	HPI address register (Write)	The Host has read/write access to the HPIA registers. The CPU has only read access to the HPIA registers.
0288 0038	HPIA (HPIAR) (2)	HPI address register (Read)	

PRODUCT PREVIEW

Table 7-70 HPI Control Registers (Part 2 of 2)

Hex Address Range	Acronym	Register Name	Comments
0288 000C - 028B 007F	-	Reserved	
0288 0080 - 028B FFFF	-	Reserved	
End of Table 7-70			

1 The CPU can write 1 to the HINT bit to generate an interrupt to the host and it can write 1 to the DSPINT bit to clear/acknowledge an interrupt from the host.

2 There are two 32-bit HPIA registers: HPIAR for read operations and HPIAW for write operations. The HPI can be configured such that HPIAR and HPIAW act as a single 32-bit HPIA (single-HPIA mode) or as two separate 32-bit HPIAs (dual-HPIA mode) from the perspective of the host. The CPU can access HPIAW and HPIAR independently. For details about the HPIA registers and their modes, see the *TMS320C6457 DSP Host Port Interface (HPI) User's Guide* (literature number SPRUGK7).

7.12.3 HPI Electrical Data/Timing

Table 7-71 Host-Port Interface Timing Requirements (1) (2)
(see Table 7-72 and see Figure 7-28, Figure 7-29, Figure 7-30, Figure 7-31, Figure 7-32, Figure 7-33, Figure 7-34, and Figure 7-35)

No.			Min	Max	Unit
9	$t_{su(HASL-HSTBL)}$	Setup time, $\overline{HAS}$ low before $\overline{HSTROBE}$ low	5		ns
10	$t_{h(HSTBL-HASL)}$	Hold time, $\overline{HAS}$ low after $\overline{HSTROBE}$ low	2		ns
11	$t_{su(SELV-HASL)}$	Setup time, select signals (3) valid before $\overline{HAS}$ low	5		ns
12	$t_{h(HASL-SELV)}$	Hold time, select signals (3) valid after $\overline{HAS}$ low	5		ns
13	$t_{w(HSTBL)}$	Pulse duration, $\overline{HSTROBE}$ low	15		ns
14	$t_{w(HSTBH)}$	Pulse duration, $\overline{HSTROBE}$ high between consecutive accesses	2M		ns
15	$t_{su(SELV-HSTBL)}$	Setup time, select signals (3) valid before $\overline{HSTROBE}$ low	5		ns
16	$t_{h(HSTBL-SELV)}$	Hold time, select signals (3) valid after $\overline{HSTROBE}$ low	5		ns
17	$t_{su(HDV-HSTBH)}$	Setup time, host data valid before $\overline{HSTROBE}$ high	5		ns
18	$t_{h(HSTBH-HDV)}$	Hold time, host data valid after $\overline{HSTROBE}$ high	1		ns
37	$t_{su(HCSL-HSTBL)}$	Setup time, $\overline{HCS}$ low before $\overline{HSTROBE}$ low	0		ns
38	$t_{h(HRDYL-HSTBL)}$	Hold time, $\overline{HSTROBE}$ low after $\overline{HRDY}$ low. $\overline{HSTROBE}$ should not be inactivated until $\overline{HRDY}$ is active (low); otherwise, HPI writes will not complete properly.	1.1		ns
End of Table 7-71					

1 $\overline{HSTROBE}$ refers to the following logical operation on $\overline{HCS}$, $\overline{HDS1}$, and $\overline{HDS2}$: [NOT($\overline{HDS1}$ XOR $\overline{HDS2}$)] OR $\overline{HCS}$.

2 M = SYSCLK5 period = 6 ÷ CPU clock frequency in ns. For example, when running parts at 1000 MHz, use M = 6 ns.

3 Select signals include: HCNTL[1:0] and HR/W. For HPI16 mode only, select signals also include HHWIL.

Table 7-72 Host-Port Interface Switching Characteristics (1) (2) (Part 1 of 2)
(see Table 7-71 and see Figure 7-28, Figure 7-29, Figure 7-30, Figure 7-31, Figure 7-32, Figure 7-33, Figure 7-34, and Figure 7-35)

No.	Parameter			Min	Max	Unit
1	$t_{d(HSTBL-HDV)}$	Delay time, $\overline{HSTROBE}$ low to DSP data valid	Case 1. HPIC or HPIA read	1	15	ns
			Case 2. HPID read with no auto-increment (3)		9 × M + 20	
			Case 3. HPID read with auto-increment and read FIFO initially empty (3)		9 × M + 20	
			Case 4. HPID read with auto-increment and data previously prefetched into the read FIFO	1	15	
2	$t_{dis(HSTBH-HDV)}$	Disable time, HD high-impedance from $\overline{HSTROBE}$ high		1	4	ns
3	$t_{en(HSTBL-HD)}$	Enable time, HD driven from $\overline{HSTROBE}$ low		3	15	ns
4	$t_{d(HSTBL-HRDYH)}$	Delay time, $\overline{HSTROBE}$ low to $\overline{HRDY}$ high			12	ns
5	$t_{d(HSTBH-HRDYH)}$	Delay time, $\overline{HSTROBE}$ high to $\overline{HRDY}$ high			12	ns
6	$t_{d(HSTBL-HRDYL)}$	Delay time, $\overline{HSTROBE}$ low to $\overline{HRDY}$ low	Case 1. HPID read with no auto-increment (3)		10 × M + 20	ns
			Case 2. HPID read with auto-increment and read FIFO initially empty (3)		10 × M + 20	
7	$t_{d(HDV-HRDYL)}$	Delay time, HD valid to $\overline{HRDY}$ low		0		ns

PRODUCT PREVIEW

Table 7-72 Host-Port Interface Switching Characteristics [1] [2] (Part 2 of 2)
(see Table 7-71 and see Figure 7-28, Figure 7-29, Figure 7-30, Figure 7-31, Figure 7-32, Figure 7-33, Figure 7-34, and Figure 7-35)

No.	Parameter			Min	Max	Unit
34	$t_{d(HSTBH-HRDYL)}$	Delay time, HSTROBE high to HRDY low	Case 1. HPIA write [3]		5 × M + 20	ns
			Case 2. HPID write with no auto-increment [3]		5 × M + 20	
35	$t_{d(HSTBL-HRDYL)}$	Delay time, HSTROBE low to HRDY low for HPIA write and FIFO not empty [3]			40 × M + 20	ns
36	$t_{d(HASL-HRDYH)}$	Delay time, HAS low to HRDY high			12	ns
End of Table 7-72						

1 M = SYSCLK5 period = 6 ÷ CPU clock frequency in ns. For example, when running parts at 1000 MHz, use M = 6 ns.
2 HSTROBE refers to the following logical operation on HCS, HDS1, and HDS2: [NOT(HDS1 XOR HDS2)] OR HCS.
3 Assumes the HPI is accessing L2/L1 memory and no other master is accessing the same memory location.

Figure 7-28 HPI16 Read Timing (HAS Not Used, Tied High)

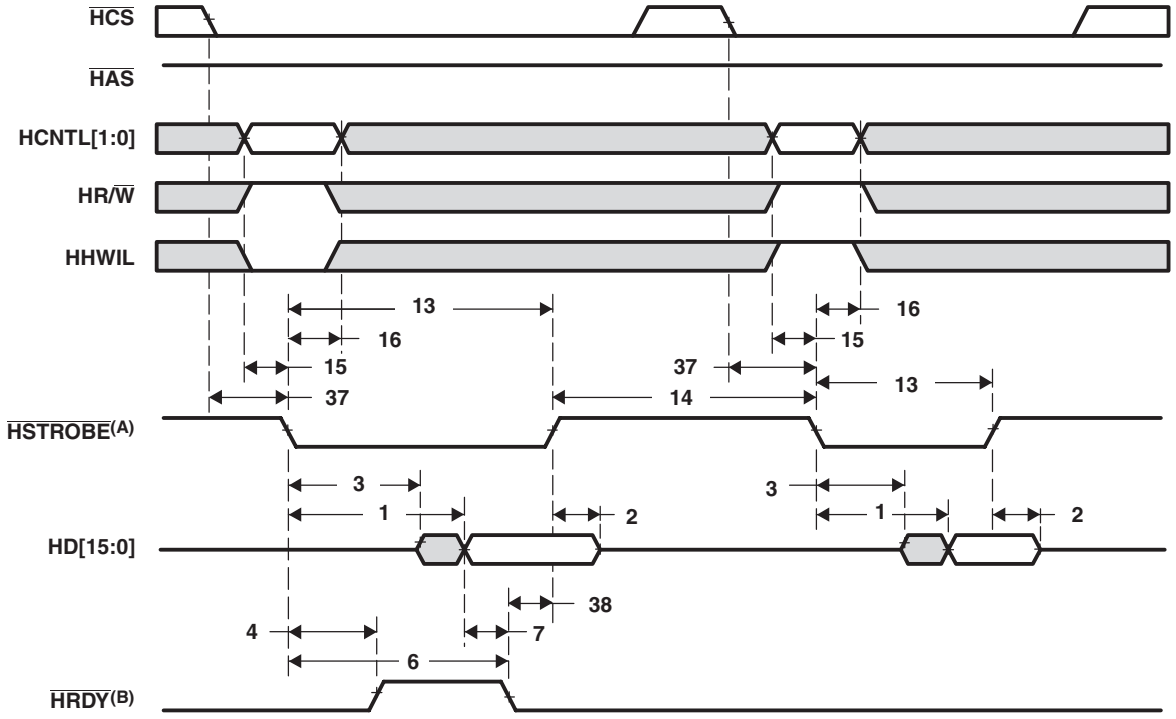

(A) HSTROBE refers to the following logical operation on HCS, HDS1, and HDS2: [NOT(HDS1 XOR HDS2)] OR HCS.
(B) Depending on the type of write or read operation (HPID without auto-incrementing; HPIA, HPIC, or HPID with auto-incrementing) and the state of the FIFO, transitions on HRDY may or may not occur. For more detailed information on the HPI peripheral, see the *TMS320C6457 DSP Host Port Interface (HPI) User's Guide* (literature number SPRUGK7).

PRODUCT PREVIEW

2009 Texas Instruments Incorporated

Figure 7-29 HPI16 Read Timing (HAS Used)

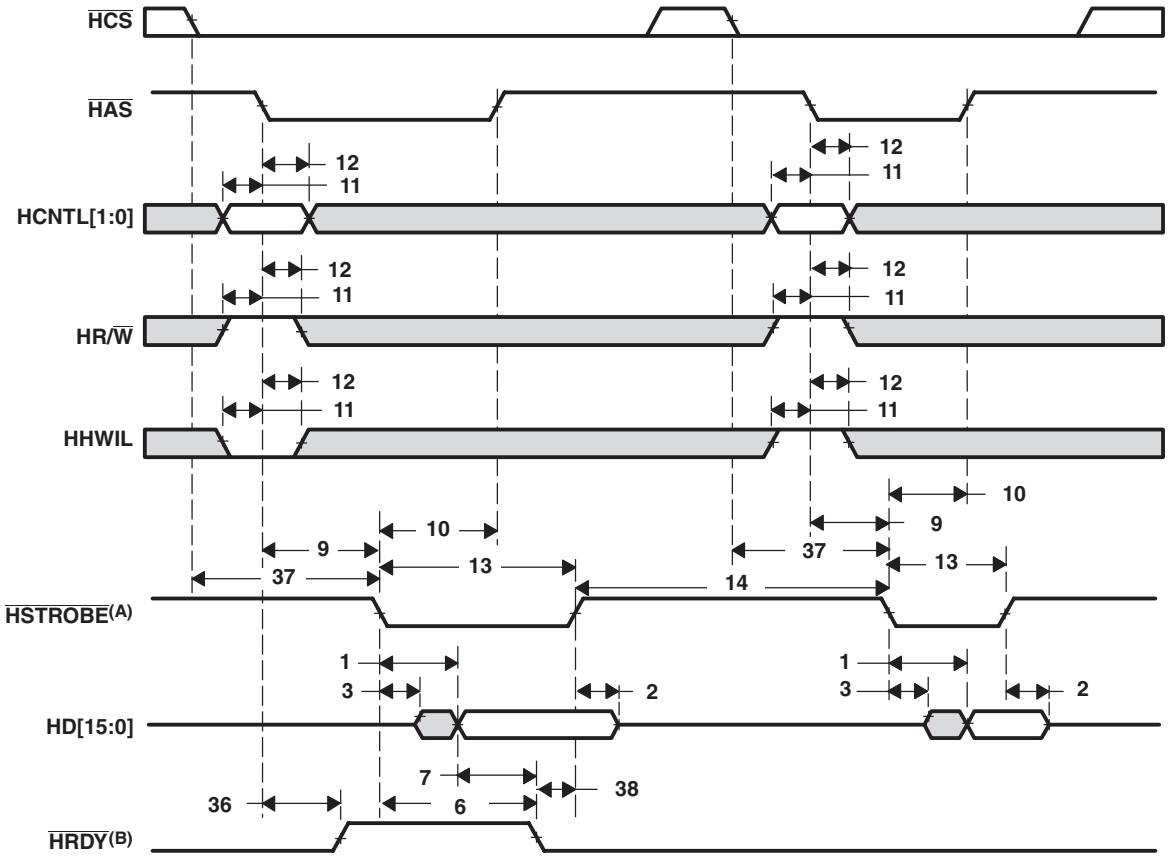

(A) HSTROBE refers to the following logical operation on HCS, HDS1, and HDS2: [NOT(HDS1 XOR HDS2)] OR HCS.

(B) Depending on the type of write or read operation (HPID without auto-incrementing; HPIA, HPIC, or HPID with auto-incrementing) and the state of the FIFO, transitions on HRDY may or may not occur. For more detailed information on the HPI peripheral, see the *TMS320C6457 DSP Host Port Interface (HPI) User's Guide* (literature number SPRUGK7).

PRODUCT PREVIEW

Figure 7-30 HPI16 Write Timing (HAS Not Used, Tied High)

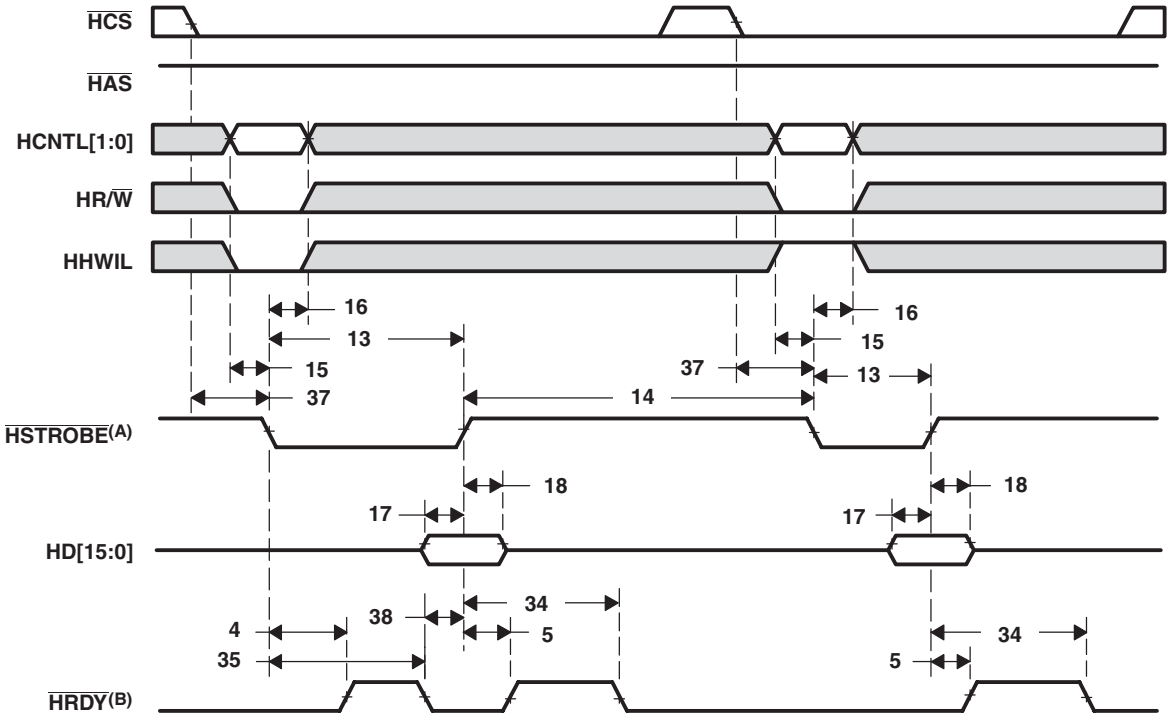

(A) HSTROBE refers to the following logical operation on HCS, HDS1, and HDS2: [NOT(HDS1 XOR HDS2)] OR HCS.

(B) Depending on the type of write or read operation (HPID without auto-incrementing; HPIA, HPIC, or HPID with auto-incrementing) and the state of the FIFO, transitions on HRDY may or may not occur. For more detailed information on the HPI peripheral, see the *TMS320C6457 DSP Host Port Interface (HPI) User's Guide* (literature number SPRUGK7).

PRODUCT PREVIEW

Figure 7-31 HPI16 Write Timing (HAS Used)

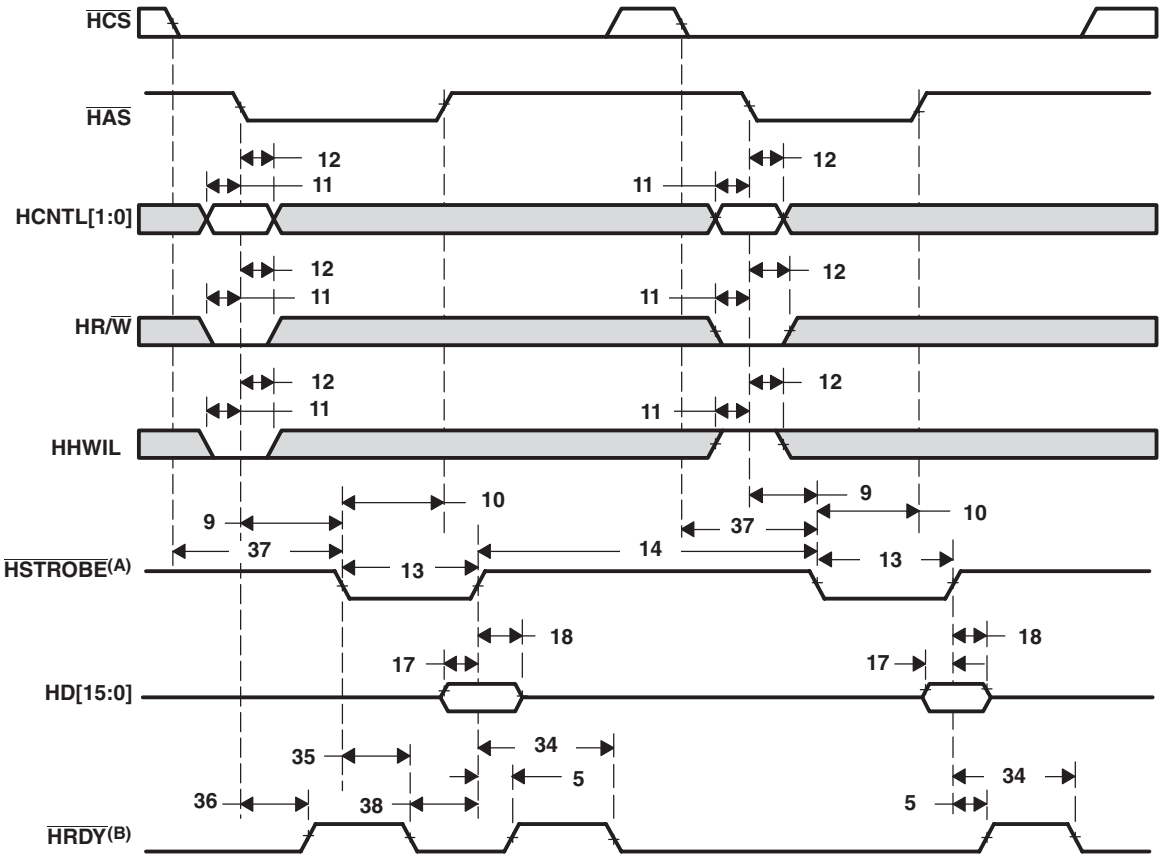

(A) HSTROBE refers to the following logical operation on HCS, HDS1, and HDS2: [NOT(HDS1 XOR HDS2)] OR HCS.

(B) Depending on the type of write or read operation (HPID without auto-incrementing; HPIA, HPIC, or HPID with auto-incrementing) and the state of the FIFO, transitions on HRDY may or may not occur. For more detailed information on the HPI peripheral, see the *TMS320C6457 DSP Host Port Interface (HPI) User's Guide* (literature number SPRUGK7).

PRODUCT PREVIEW

PRODUCT PREVIEW

Figure 7-32 HPI32 Read Timing ($\overline{HAS}$ Not Used, Tied High)

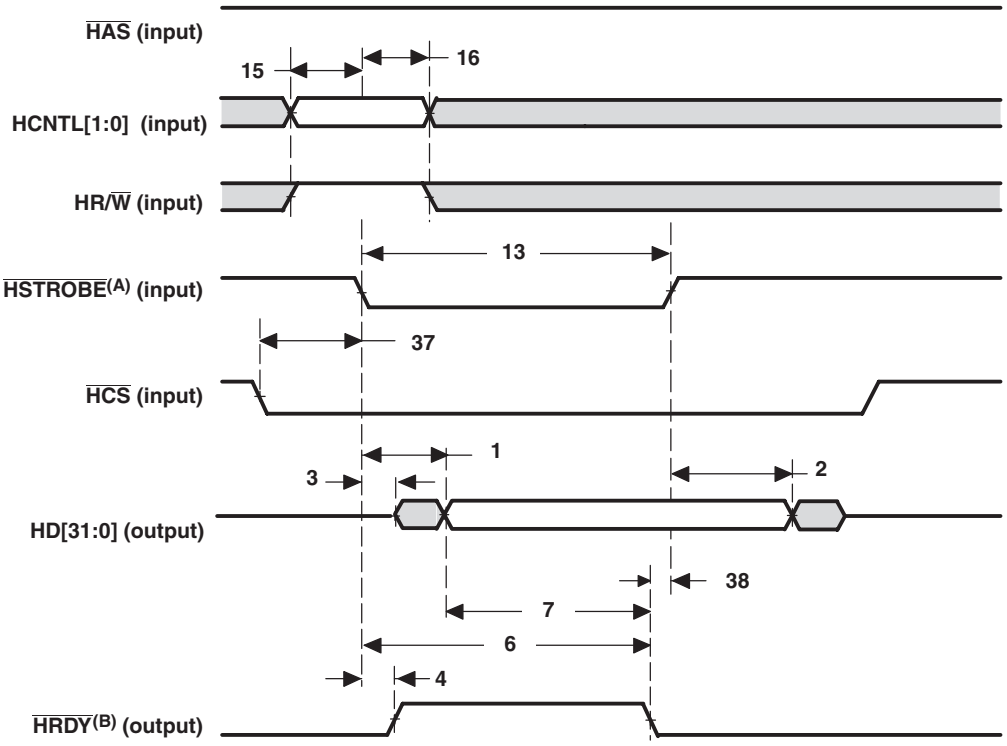

(A) $\overline{HSTROBE}$ refers to the following logical operation on $\overline{HCS}$, $\overline{HDS1}$, and $\overline{HDS2}$: [NOT($\overline{HDS1}$ XOR $\overline{HDS2}$)] OR $\overline{HCS}$.

(B) Depending on the type of write or read operation (HPID without auto-incrementing; HPIA, HPIC, or HPID with auto-incrementing) and the state of the FIFO, transitions on $\overline{HRDY}$ may or may not occur. For more detailed information on the HPI peripheral, see the *TMS320C6457 DSP Host Port Interface (HPI) User's Guide* (literature number SPRUGK7).

(C) The timing $t_{w(HSTBH)}$, $\overline{HSTROBE}$ high pulse duration, must be met between consecutive HPI accesses in HPI32 mode.

 2009 Texas Instruments Incorporated

Figure 7-33 HPI32 Read Timing (HAS Used)

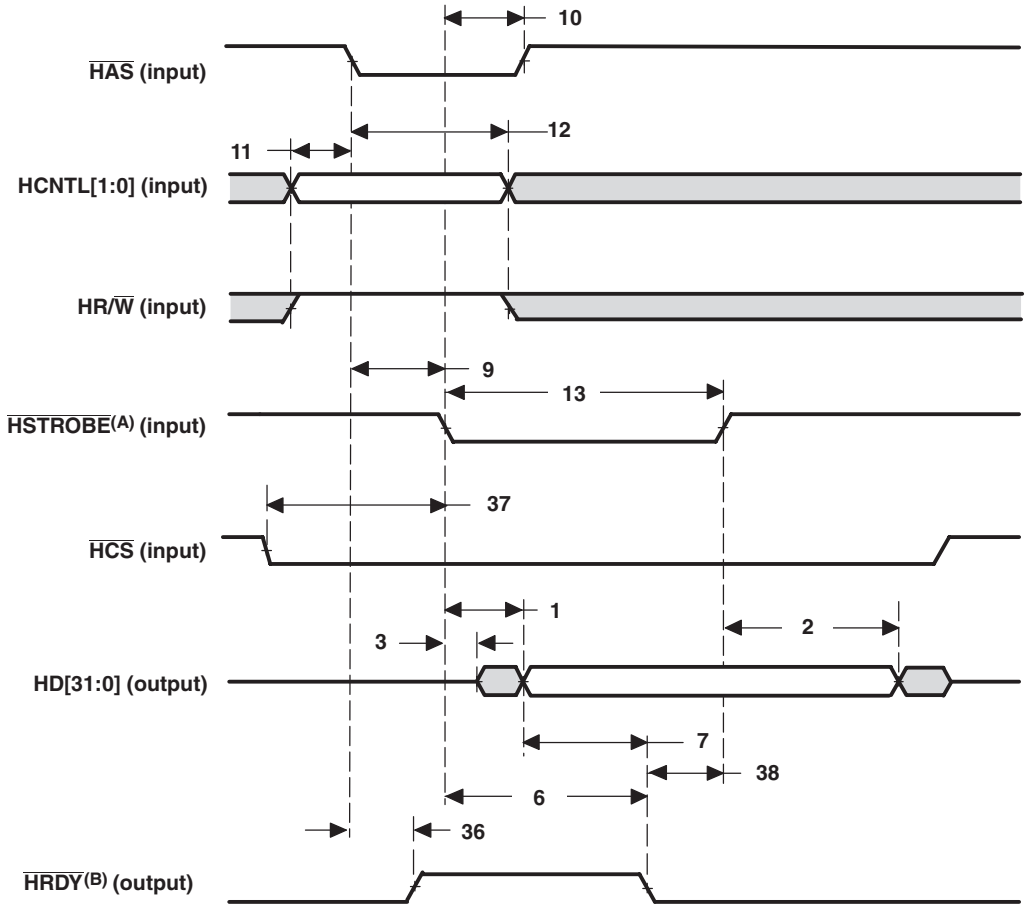

(A) HSTROBE refers to the following logical operation on HCS, HDS1, and HDS2: [NOT(HDS1 XOR HDS2)] OR HCS.

(B) Depending on the type of write or read operation (HPID without auto-incrementing; HPIA, HPIC, or HPID with auto-incrementing) and the state of the FIFO, transitions on HRDY may or may not occur. For more detailed information on the HPI peripheral, see the *TMS320C6457 DSP Host Port Interface (HPI) User's Guide* (literature number SPRUGK7).

(C) The timing $t_{w(HSTBH)}$, HSTROBE high pulse duration, must be met between consecutive HPI accesses in HPI32 mode.

PRODUCT PREVIEW

PRODUCT PREVIEW

Figure 7-34 HPI32 Write Timing ($\overline{\text{HAS}}$ Not Used, Tied High)

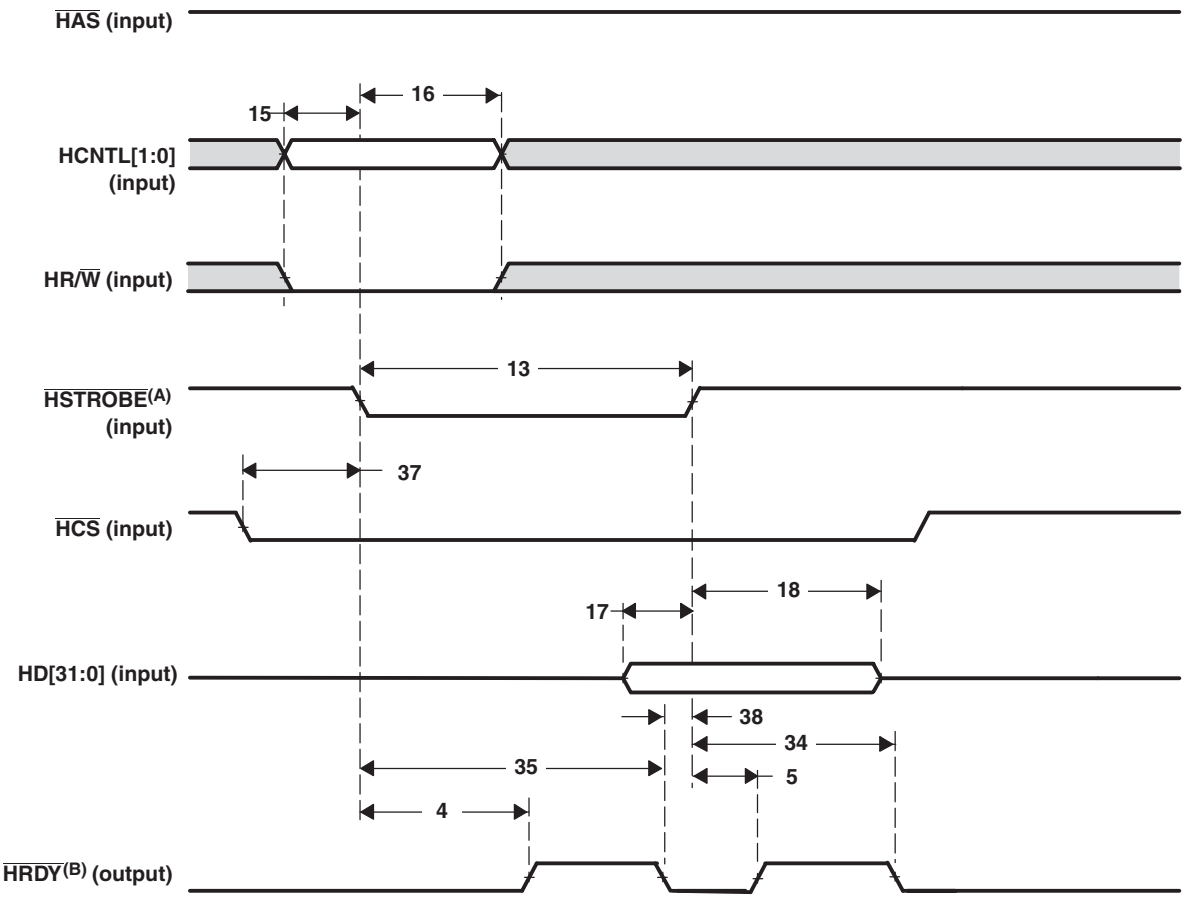

(A) $\overline{\text{HSTROBE}}$ refers to the following logical operation on $\overline{\text{HCS}}$, $\overline{\text{HDS1}}$, and $\overline{\text{HDS2}}$: [NOT($\overline{\text{HDS1}}$ XOR $\overline{\text{HDS2}}$)] OR $\overline{\text{HCS}}$.

(B) Depending on the type of write or read operation (HPID without auto-incrementing; HPIA, HPIC, or HPID with auto-incrementing) and the state of the FIFO, transitions on $\overline{\text{HRDY}}$ may or may not occur. For more detailed information on the HPI peripheral, see the *TMS320C6457 DSP Host Port Interface (HPI) User's Guide* (literature number SPRUGK7).

(C) The timing $t_{w(HSTBH)}$, $\overline{\text{HSTROBE}}$ high pulse duration, must be met between consecutive HPI accesses in HPI32 mode.

 2009 Texas Instruments Incorporated

Figure 7-35 HPI32 Write Timing ($\overline{HAS}$ Used)

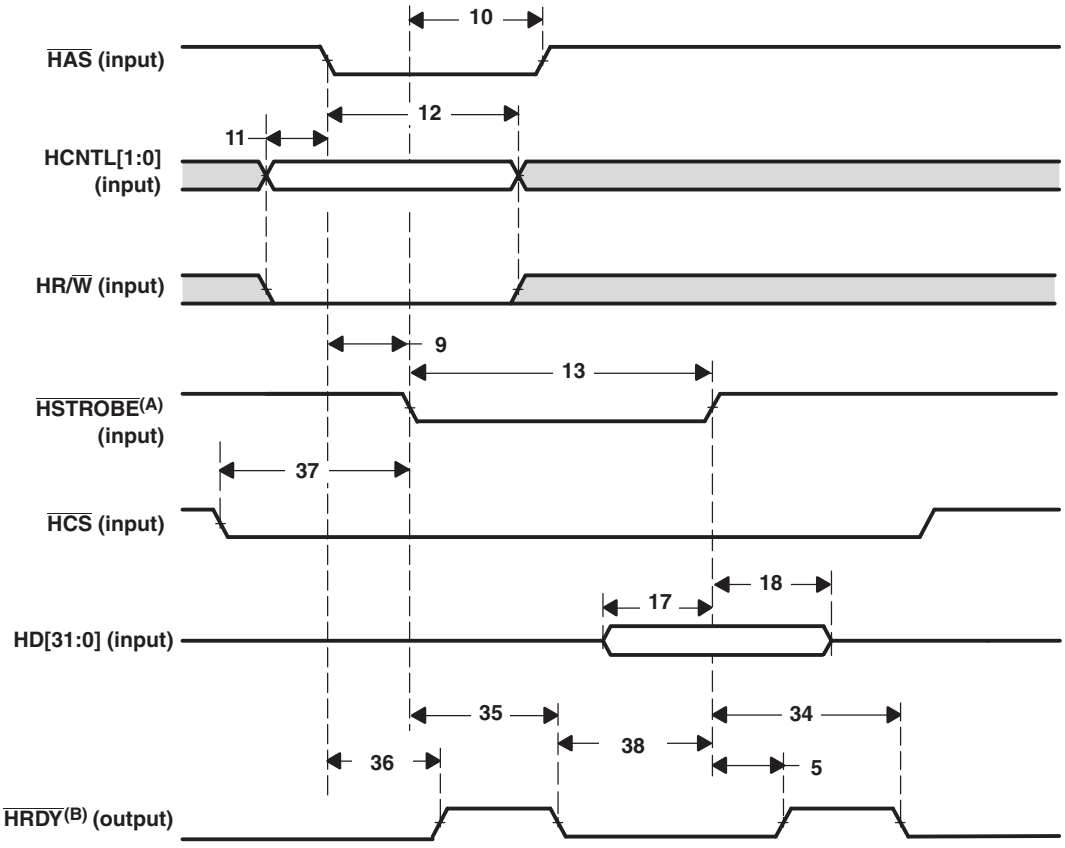

(A) $\overline{HSTROBE}$ refers to the following logical operation on $\overline{HCS}$, $\overline{HDS1}$, and $\overline{HDS2}$: [NOT($\overline{HDS1}$ XOR $\overline{HDS2}$)] OR $\overline{HCS}$.

(B) Depending on the type of write or read operation (HPID without auto-incrementing; HPIA, HPIC, or HPID with auto-incrementing) and the state of the FIFO, transitions on $\overline{HRDY}$ may or may not occur. For more detailed information on the HPI peripheral, see the *TMS320C6457 DSP Host Port Interface (HPI) User's Guide* (literature number SPRUGK7).

(C) The timing $t_{w(HSTBH)}$, $\overline{HSTROBE}$ high pulse duration, must be met between consecutive HPI accesses in HPI32 mode.

PRODUCT PREVIEW

7.13 Multichannel Buffered Serial Port (McBSP)

The McBSP provides these functions:

- Full-duplex communication
- Double-buffered data registers, which allow a continuous data stream
- Independent framing and clocking for receive and transmit
- Direct interface to industry-standard codecs, analog interface chips (AICs), and other serially connected analog-to-digital (A/D) and digital-to-analog (D/A) devices
- External shift clock or an internal, programmable frequency shift clock for data transfer

For more detailed information on the McBSP peripheral, see the *TMS320C6457 DSP Multichannel Buffered Serial Port (McBSP) Reference Guide* (literature number SPRUGK8).

PRODUCT PREVIEW

7.13.1 McBSP Device-Specific Information

The CLKS signal for MCBSP0 and MCBSP1 can be sourced from an external pin or by the PLL1 controller; for details, see Section 7.7 "PLL1 and PLL1 Controller" on page 130. If the clock from the PLL1 controller is used, the clock is shared between the two McBSPs.

7.13.1.1 McBSP Peripheral Register Description(s)

Table 7-73 McBSP 0 Registers

Hex Address Range	Acronym	Register Name
028C 0000	DRR0	McBSP0 Data Receive Register via Configuration Bus (1)
3000 0000	DRR0	McBSP0 Data Receive Register via EDMA3 Bus
028C 0004	DXR0	McBSP0 Data Transmit Register via Configuration Bus
3000 0010	DXR0	McBSP0 Data Transmit Register via EDMA Bus
028C 0008	SPCR0	McBSP0 Serial Port Control Register
028C 000C	RCR0	McBSP0 Receive Control Register
028C 0010	XCR0	McBSP0 Transmit Control Register
028C 0014	SRGR0	McBSP0 Sample Rate Generator register
028C 0018	MCR0	McBSP0 Multichannel Control Register
028C 001C	RCERE00	McBSP0 Enhanced Receive Channel Enable Register 0 Partition A/B
028C 0020	XCERE00	McBSP0 Enhanced Transmit Channel Enable Register 0 Partition A/B
028C 0024	PCR0	McBSP0 Pin Control Register
028C 0028	RCERE10	McBSP0 Enhanced Receive Channel Enable Register 1 Partition C/D
028C 002C	XCERE10	McBSP0 Enhanced Transmit Channel Enable Register 1 Partition C/D
028C 0030	RCERE20	McBSP0 Enhanced Receive Channel Enable Register 2 Partition E/F
028C 0034	XCERE20	McBSP0 Enhanced Transmit Channel Enable Register 2 Partition E/F
028C 0038	RCERE30	McBSP0 Enhanced Receive Channel Enable Register 3 Partition G/H
028C 003C	XCERE30	McBSP0 Enhanced Transmit Channel Enable Register 3 Partition G/H
028C 0040 - 028F FFFF	-	Reserved
End of Table 7-73		

1 The CPU and EDMA3 controller can only read the register, they cannot write to it.

 2009 Texas Instruments Incorporated

Table 7-74 McBSP 1 Registers

Hex Address Range	Acronym	Register Name
0290 0000	DRR1	McBSP1 Data Receive Register via Configuration Bus(1)
3400 0000	DRR1	McBSP1 Data Receive Register via EDMA bus
0290 0004	DXR1	McBSP1 Data Transmit Register via configuration bus
3400 0010	DXR1	McBSP1 Data Transmit Register via EDMA bus
0290 0008	SPCR1	McBSP1 serial port control register
0290 000C	RCR1	McBSP1 Receive Control Register
0290 0010	XCR1	McBSP1 Transmit Control Register
0290 0014	SRGR1	McBSP1 sample rate generator register
0290 0018	MCR1	McBSP1 multichannel control register
0290 001C	RCERE01	McBSP1 Enhanced Receive Channel Enable Register 0 Partition A/B
0290 0020	XCERE01	McBSP1 Enhanced Transmit Channel Enable Register 0 Partition A/B
0290 0024	PCR1	McBSP1 Pin Control Register
0290 0028	RCERE11	McBSP1 Enhanced Receive Channel Enable Register 1 Partition C/D
0290 002C	XCERE11	McBSP1 Enhanced Transmit Channel Enable Register 1 Partition C/D
0290 0030	RCERE21	McBSP1 Enhanced Receive Channel Enable Register 2 Partition E/F
0290 0034	XCERE21	McBSP1 Enhanced Transmit Channel Enable Register 2 Partition E/F
0290 0038	RCERE31	McBSP1 Enhanced Receive Channel Enable Register 3 Partition G/H
0290 003C	XCERE31	McBSP1 Enhanced Transmit Channel Enable Register 3 Partition G/H
0290 0040 - 0293 FFFF	-	Reserved
End of Table 7-74		

PRODUCT PREVIEW

7.13.2 McBSP Electrical Data/Timing

Table 7-75 McBSP Timing Requirements (1)
(see Figure 7-36)

No.				Min	Max	Unit
2	$t_{c(CKRX)}$	Cycle time, CLKR/X	CLKR/X ext	10P (2)		ns
3	$t_{w(CKRX)}$	Pulse duration, CLKR/X high or CLKR/X low	CLKR/X ext	$0.5t_{c(CKRX)}$ - 1 (2)		ns
5	$t_{su(FRH-CKRL)}$	Setup time, external FSR high before CLKR low	CLKR int	9		ns
			CLKR ext	1.3		
6	$t_{h(CKRL-FRH)}$	Hold time, external FSR high after CLKR low	CLKR int	6		ns
			CLKR ext	3		
7	$t_{su(DRV-CKRL)}$	Setup time, DR valid before CLKR low	CLKR int	8		ns
			CLKR ext	0.9		
8	$t_{h(CKRL-DRV)}$	Hold time, DR valid after CLKR low	CLKR int	3		ns
			CLKR ext	3.1		
10	$t_{su(FXH-CKXL)}$	Setup time, external FSX high before CLKX low	CLKR int	9		ns
			CLKR ext	1.3		
11	$t_{h(CKXL-FXH)}$	Hold time, external FSX high after CLKX low	CLKR int	6		ns
			CLKR ext	3		
End of Table 7-75						

1 P = 1/SYSREFCLK frequency in ns. For example, when running parts at 1000 MHz, use P = 1 ns.
2 This parameter applies to the maximum McBSP frequency. Operate serial clocks (CLKR/X) in the reasonable range of 40/60 duty cycle.

Table 7-76 Switching Characteristics for McBSP (1) (2) (3)
(see Figure 7-36)

No.	Parameter			Min	Max	Unit
1	$t_{d(CKSH-CKRXH)}$	Delay time, CLKS high to CLKR/X high for internal CLKR/X generated from CLKS input. (4)		1.4	10	ns
2	$t_{c(CKRX)}$	Cycle time, CLKR/X	CLKR/X int	10P (5) (6) (7)		ns
3	$t_{w(CKRX)}$	Pulse duration, CLKR/X high or CLKR/X low	CLKR/X int	$0.5t_{c(CKRX)}$ - 1		ns
4	$t_{d(CKRH-FRV)}$	Delay time, CLKR high to internal FSR valid	CLKR int	-2.1	3	ns
9	$t_{d(CKXH-FXV)}$	Delay time, CLKX high to internal FSX valid	CLKX int	-1.7	3	ns
			CLKX ext	1.7	9	
12	$t_{dis(CKXH-DXHZ)}$	Disable time, DX Hi-Z following last data bit from CLKX high	CLKX int	-3.9	4	ns
			CLKX ext	2	9	
13	$t_{d(CKXH-DXV)}$	Delay time, CLKX high to DX valid	CLKX int	-3.9	4	ns
			CLKX ext	2	9	
14	$t_{d(FXH-DXV)}$	Delay time, FSX high to DX valid applies ONLY when in data delay 0 (XDATDLY = 00b) mode	FSX int	-2.3 + D1 (8)	5.6 + D2 (8)	ns
			FSX ext	1.9 + D1 (8)	9 + D2 (8)	

End of Table 7-76

1 Over recommended operating conditions.
2 CLKRP = CLKXP = FSRP = FSXP = 0. If polarity of any of the signals is inverted, then the timing references of that signal are also inverted.
3 Minimum delay times also represent minimum output hold times.
4 The CLKS signal is shared by both McBSP0 and McBSP1 on this device.
5 Minimum CLKR ÷ X cycle times must be met, even when CLKR ÷ X is generated by an internal clock source. Minimum CLKR ÷ X cycle times are based on internal logic speed; the maximum usable speed may be lower due to EDMA limitations and AC timing requirements
6 P = 1/SYSREFCLK frequency in ns. For example, when running parts at 1000 MHz, use P = 1 ns.
7 Use whichever value is greater
8 Extra delay from FSX high to DX valid applies only to the first data bit of a device, if and only if DXENA = 1 in SPCR.
if DXENA = 0, then D1 = D2 = 0
if DXENA = 1, then D1 = 4P, D2 = 8P

PRODUCT PREVIEW

2009 Texas Instruments Incorporated

Figure 7-36 McBSP Timing

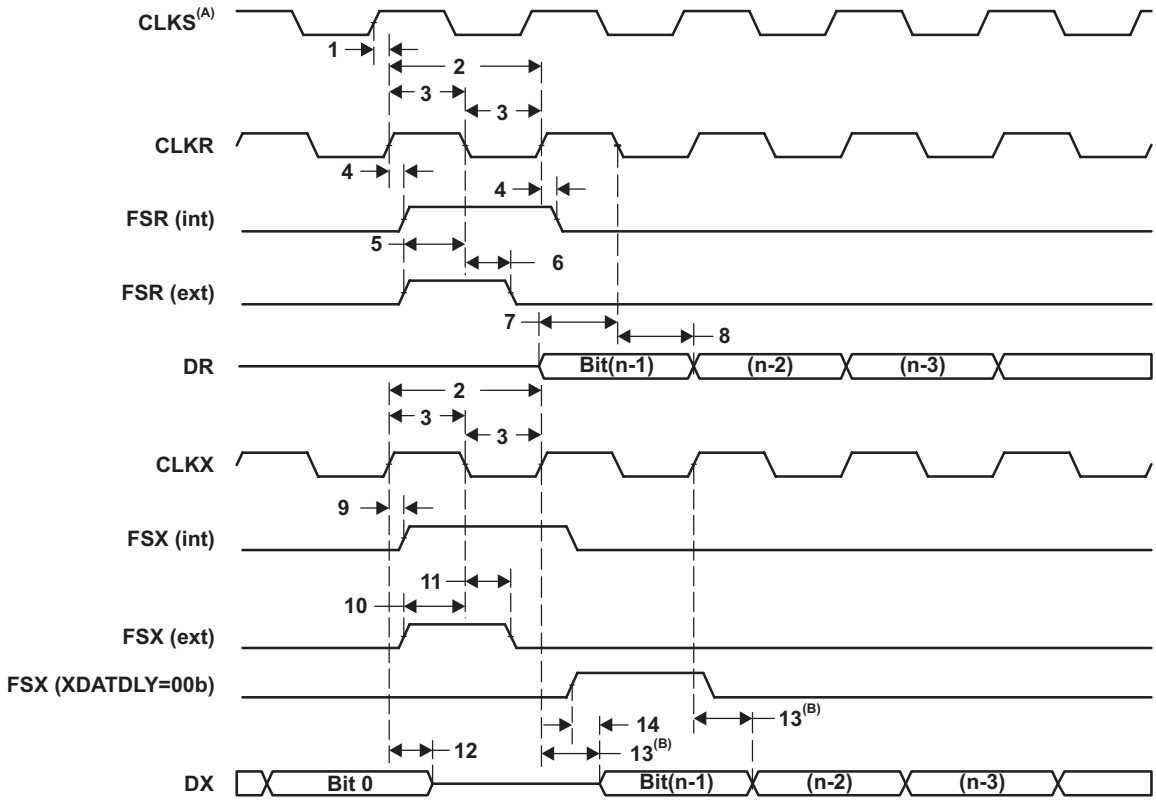

(A) The CLKS signal is shared by both McBSP0 and McBSP1 on this device.
(B) Parameter No. 13 applies to the first data bit *only* when XDATDLY ≠ 0.

Table 7-77 Timing Requirements for FSR When GSYNC = 1
(see Figure 7-37)

No.			Min	Max	Unit
1	$t_{su(FRH-CKSH)}$	Setup time, FSR high before CLKS high	4		ns
2	$t_{h(CKSH-FRH)}$	Hold time, FSR high after CLKS high	4		ns
End of Table 7-77					

Figure 7-37 FSR Timing When GSYNC = 1

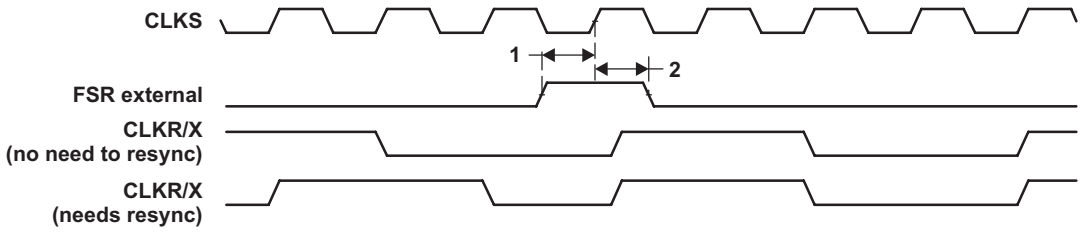

PRODUCT PREVIEW

Table 7-78 SPI Timing Requirements as Master or Slave: CLKSTP = 10b, CLKXP = 0 (1) (2)
(see Figure 7-38)

No.			Master		Slave		Unit
			Min	Max	Min	Max	
4	$t_{su(DRV-CKXL)}$	Setup time, DR valid before CLKX low	12		2-12P		ns
5	$t_{h(CKXL-DRV)}$	Hold time, DR valid after CLKX low	4		5+24P		ns
End of Table 7-78							

1 For all SPI Slave modes, CLKG is programmed as 1/6 of the CPU clock by setting CLKSM = CLKGDV = 1.
2 P = 1/SYSREFCLK frequency in ns. For example, when running parts at 1000 MHz, use P = 1 ns.

Table 7-79 SPI Switching Characteristics as Master or Slave: CLKSTP = 10b, CLKXP = 0 (1) (2) (3) (4) (5)
(see Figure 7-38)

No.	Parameters		Master		Slave		Unit
			Min	Max	Min	Max	
1	$t_{d(CKXL-FXH)}$	Delay time, FSX high after CLKX low	T-2	T+3			ns
2	$t_{d(FXL-CKXH)}$	Delay time, CLKX high after FSX low	L-3	L+3			ns
3	$t_{d(CKXH-DXV)}$	Delay time, CLKX high to DX valid	-2	4	12P+2.8	24P+17	ns
6	$t_{dis(CKXL-DXHZ)}$	Disable time, DX high impedance following last data bit from CLKX low	L-2	L+3			ns
7	$t_{dis(FXH-DXHZ)}$	Disable time, DX high impedance following last data bit from FSX high			4P+3	12P+17	ns
8	$td_{(FXL-DXV)}$	Delay time, FSX low to DX valid			8P+1.8	18P+17	ns
End of Table 7-79							

1 P = 1/SYSREFCLK frequency in ns. For example, when running parts at 1000 MHz, use P = 1 ns.
2 For all SPI Slave modes, CLKG is programmed as 1/6 of the CPU clock by setting CLKSM = CLKGDV = 1.
3 S = Sample rate generator input clock = 6P if CLKSM = 1
S = Sample rate generator input clock = P_clks if CLKSM = 0 (P_clks = CLKS period)
T = CLKX period = (1 + CLKGDV) * S
H = CLKX high pulse width = (CLKGDV/2 + 1) * S if CLKGDV is even
H = (CLKGDV + 1)/2 * S if CLKGDV is odd
L = CLKX low pulse width = (CLKGDV/2) * S if CLKGDV is even
L = (CLKGDV + 1)/2 * S if CLKGDV is odd
4 FSRP = FSXP = 1. As a SPI Master, FSX is inverted to provide active-low slave-enable output. As a Slave, the active-low signal input on FSX and FSR is inverted before being used internally.
CLKXM = FSXM = 1, CLKRM = FSRM = 0 for Master McBSP
CLKXM = CLKRM = FSXM = FSRM = 0 for Slave McBSP
5 FSX should be low before the rising edge of clock to enable Slave devices and then begin a SPI transfer at the rising edge of the Master clock (CLKX).

Figure 7-38 SPI Timing as Master or Slave: CLKSTP = 10b, CLKXP = 0

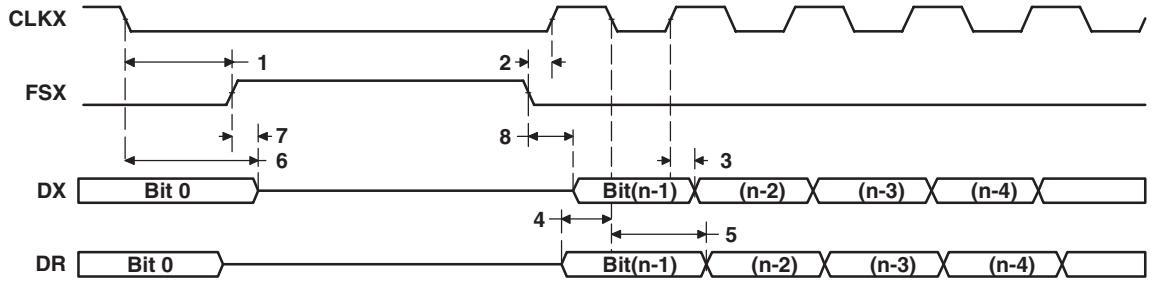

 2009 Texas Instruments Incorporated

Table 7-80 SPI Timing Requirements as Master or Slave: CLKSTP = 10b, CLKXP = 1 [1] [2]
(see Figure 7-39)

No.			Master		Slave		Unit
			Min	Max	Min	Max	
4	$t_{su(DRV-CKXH)}$	Setup time, DR valid before CLKX high	12		2-12P		ns
5	$t_{h(CKXH-DRV)}$	Hold time, DR valid after CLKX high	4		5+24P		ns
End of Table 7-80							

1 P = 1/SYSREFCLK frequency in ns. For example, when running parts at 1000 MHz, use P = 1 ns.
2 For all SPI Slave modes, CLKG is programmed as 1/6 of the CPU clock by setting CLKSM = CLKGDV = 1.

Table 7-81 SPI Switching Characteristics as Master or Slave: CLKSTP = 10b, CLKXP = 1 [1] [2] [3] [4] [5]
(see Figure 7-39)

No.	Parameter		Master		Slave		Unit
			Min	Max	Min	Max	
1	$t_{d(CKXH-FXH)}$	Delay time, FSX high after CLKX high	T-2	T+3			ns
2	$t_{d(FXL-CKXL)}$	Delay time, CLKX low after FSX low	H-3	H+3			ns
3	$t_{d(CKXL-DXV)}$	Delay time, CLKX low to DX valid	-2	4	12P + 2.8	24P + 17	ns
6	$t_{dis(CKXH-DXHZ)}$	Disable time, DX high impedance following last data bit from CLKX high	H-2	H+3			ns
7	$t_{dis(FXH-DXHZ)}$	Disable time, DX high impedance following last data bit from FSX high			4P+3	12P+17	ns
8	$t_{d(FXL-DXV)}$	Delay time, FSX low to DX valid			8P+2	18P+17	ns
End of Table 7-81							

1 P = 1/SYSREFCLK frequency in ns. For example, when running parts at 1000 MHz, use P = 1 ns.
2 For all SPI Slave modes, CLKG is programmed as 1/6 of the CPU clock by setting CLKSM = CLKGDV = 1.
3 S = Sample rate generator input clock = 6P if CLKSM = 1
S = Sample rate generator input clock = P_clks if CLKSM = 0 (P_clks = CLKS period)
T = CLKX period = (1 + CLKGDV) * S
H = CLKX high pulse width = (CLKGDV/2 + 1) * S if CLKGDV is even
H = (CLKGDV + 1)/2 * S if CLKGDV is odd
L = CLKX low pulse width = (CLKGDV/2) * S if CLKGDV is even
L = (CLKGDV + 1)/2 * S if CLKGDV is odd
4 FSRP = FSXP = 1. As a SPI Master, FSX is inverted to provide active-low slave-enable output. As a Slave, the active-low signal input on FSX and FSR is inverted before being used internally.
CLKXM = FSXM = 1, CLKRM = FSRM = 0 for Master McBSP
CLKXM = CLKRM = FSXM = FSRM = 0 for Slave McBSP
5 FSX should be low before the rising edge of clock to enable Slave devices and then begin a SPI transfer at the rising edge of the Master clock (CLKX).

Figure 7-39 SPI Timing as Master or Slave: CLKSTP = 10b, CLKXP = 1

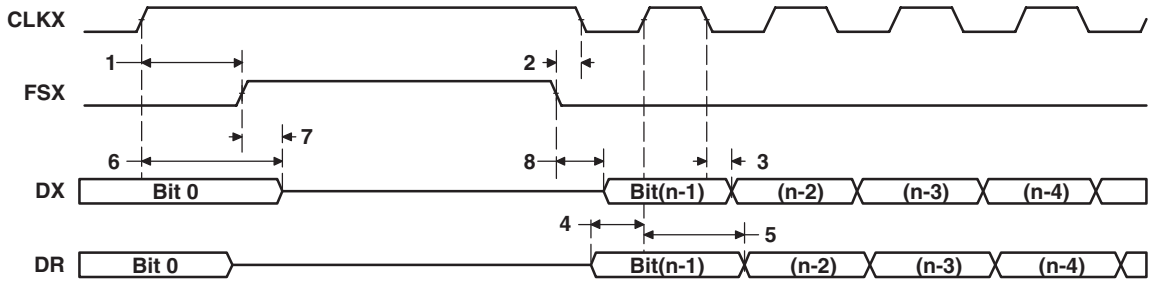

PRODUCT PREVIEW

PRODUCT PREVIEW

Table 7-82 SPI Timing Requirements as Master or Slave: CLKSTP = 11b, CLKXP = 0 (1) (2)
(see Figure 7-40)

No.			Master		Slave		Unit
			Min	Max	Min	Max	
4	$t_{su(DRV-CKXH)}$	Setup time, DR valid before CLKX high	12		2-12P		ns
5	$t_{h(CKXH-DRV)}$	Hold time, DR valid after CLKX high	4		5+24P		ns
End of Table 7-82							

1 P = 1/SYSREFCLK frequency in ns. For example, when running parts at 1000 MHz, use P = 1 ns.
2 For all SPI Slave modes, CLKG is programmed as 1/6 of the CPU clock by setting CLKSM = CLKGDV = 1.

Table 7-83 SPI Switching Characteristics as Master or Slave: CLKSTP = 11b, CLKXP = 0 (1) (2) (3) (4) (5)
(see Figure 7-40)

No.	Parameter		Master		Slave		Unit
			Min	Max	Min	Max	
1	$t_{d(CKXL-FXH)}$	Delay time, FSX high after CLKX low	L-2	L+3			ns
2	$t_{d(FXL-CKXH)}$	Delay time, CLKX high after FSX low	T-3	T+3			ns
3	$t_{d(CKXL-DXV)}$	Delay time, CLKX low to DX valid	-2	4	12P+2.8	24P+17	ns
6	$t_{dis(CKXL-DXHZ)}$	Disable time, DX high impedance following last data bit from CLKX low	-2	4	12P+3	20P+17	ns
7	$t_{dis(FXL-DXHZ)}$	Disable time, DX high impedance following last data bit from FSX low	H-2	H+4	8P+2	18P+17	ns
End of Table 7-83							

1 P = 1/SYSREFCLK frequency in ns. For example, when running parts at 1000 MHz, use P = 1 ns.
2 For all SPI Slave modes, CLKG is programmed as 1/6 of the CPU clock by setting CLKSM = CLKGDV = 1.
3 S = Sample rate generator input clock = 6P if CLKSM = 1
S = Sample rate generator input clock = P_clks if CLKSM = 0 (P_clks = CLKS period)
T = CLKX period = (1 + CLKGDV) * S
H = CLKX high pulse width = (CLKGDV/2 + 1) * S if CLKGDV is even
H = (CLKGDV + 1)/2 * S if CLKGDV is odd
L = CLKX low pulse width = (CLKGDV/2) * S if CLKGDV is even
L = (CLKGDV + 1)/2 * S if CLKGDV is odd
4 FSRP = FSXP = 1. As a SPI Master, FSX is inverted to provide active-low slave-enable output. As a Slave, the active-low signal input on FSX and FSR is inverted before being used internally.
CLKXM = FSXM = 1, CLKRM = FSRM = 0 for Master McBSP
CLKXM = CLKRM = FSXM = FSRM = 0 for Slave McBSP
5 FSX should be low before the rising edge of clock to enable Slave devices and then begin a SPI transfer at the rising edge of the Master clock (CLKX).

Figure 7-40 SPI Timing as Master or Slave: CLKSTP = 11b, CLKXP = 0

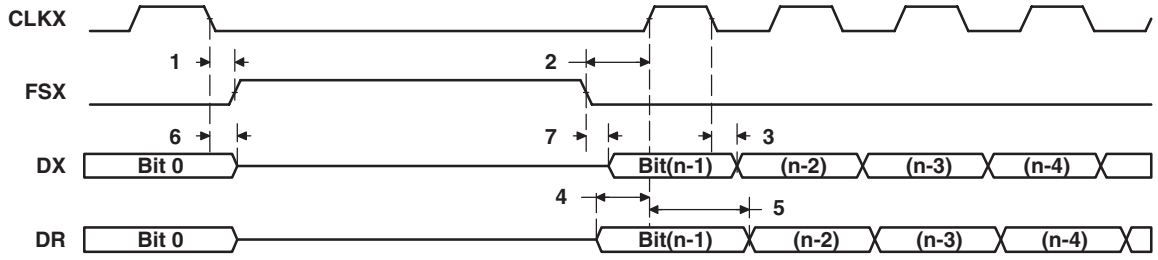

Table 7-84 SPI Timing Requirements as Master or Slave: CLKSTP = 11b, CLKXP = 1 (1) (2)
(see Figure 7-41)

No.			Master		Slave		Unit
			Min	Max	Min	Max	
4	$t_{su(DRV-CKXH)}$	Setup time, DR valid before CLKX high	12		2-12P		ns
5	$t_{h(CKXH-DRV)}$	Hold time, DR valid after CLKX high	4		5+24P		ns
End of Table 7-84							

 2009 Texas Instruments Incorporated

1 P = 1/SYSREFCLK frequency in ns. For example, when running parts at 1000 MHz, use P = 1 ns.
2 For all SPI Slave modes, CLKG is programmed as 1/6 of the CPU clock by setting CLKSM = CLKGDV = 1.

Table 7-85 SPI Switching Characteristics as Master or Slave: CLKSTP = 11b, CLKXP = 1 (1) (2) (3) (4) (5) (see Figure 7-41)

No.	Parameter		Master		Slave		Unit
			Min	Max	Min	Max	
1	$t_{d(CKXH-FXL)}$	Delay time, FSX low after CLKX high	H-2	H+3			ns
2	$t_{d(FXL-CKXL)}$	Delay time, CLKX low after FSX low	T-3	T+3			ns
3	$t_{d(CKXH-DXV)}$	Delay time, CLKX high to DX valid	-2	4	12P+2.8	24P+17	ns
6	$t_{dis(CKXH-DXHZ)}$	Disable time, DX high impedance following last data bit from CLKX high	-2	4	12P+3	20P+17	ns
7	$t_{dis(FXL-DXHZ)}$	Disable time, DX high impedance following last data bit from FSX low	L-2	L+4	8P+2	18P+17	ns
End of Table 7-85							

1 P = 1/SYSREFCLK frequency in ns. For example, when running parts at 1000 MHz, use P = 1 ns.
2 For all SPI Slave modes, CLKG is programmed as 1/6 of the CPU clock by setting CLKSM = CLKGDV = 1.
3 S = Sample rate generator input clock = 6P if CLKSM = 1
S = Sample rate generator input clock = P_clks if CLKSM = 0 (P_clks = CLKS period)
T = CLKX period = (1 + CLKGDV) * S
H = CLKX high pulse width = (CLKGDV/2 + 1) * S if CLKGDV is even; H = (CLKGDV + 1)/2 * S if CLKGDV is odd
L = CLKX low pulse width = (CLKGDV/2) * S if CLKGDV is even
L = (CLKGDV + 1)/2 * S if CLKGDV is odd
4 FSRP = FSXP = 1. As a SPI Master, FSX is inverted to provide active-low slave-enable output. As a Slave, the active-low signal input on FSX and FSR is inverted before being used internally.
CLKXM = FSXM = 1, CLKRM = FSRM = 0 for Master McBSP
CLKXM = CLKRM = FSXM = FSRM = 0 for Slave McBSP
5 FSX should be low before the rising edge of clock to enable Slave devices and then begin a SPI transfer at the rising edge of the Master clock (CLKX).

Figure 7-41 SPI Timing as Master or Slave: CLKSTP = 11b, CLKXP = 1

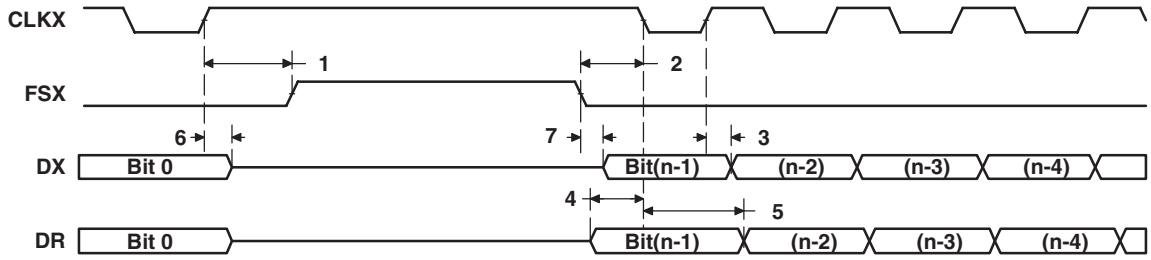

7.14 Ethernet MAC (EMAC)

The Ethernet Media Access Controller (EMAC) module provides an efficient interface between the TMS320C6457 DSP core processor and the networked community. The EMAC supports 10Base-T (10 Mbits/second [Mbps]), and 100BaseTX (100 Mbps), in half- or full-duplex mode, and 1000BaseT (1000 Mbps) in full-duplex mode, with hardware flow control and quality-of-service (QOS) support.

The EMAC module conforms to the IEEE 802.3-2002 standard, describing the *Carrier Sense Multiple Access with Collision Detection (CSMA/CD) Access Method and Physical Layer* specifications. The IEEE 802.3 standard has also been adopted by ISO/IEC and re-designated as ISO/IEC 8802-3:2000(E).

Deviation from this standard, the EMAC module does not use the Transmit Coding Error signal MTXER. Instead of driving the error pin when an underflow condition occurs on a transmitted frame, the EMAC will intentionally generate an incorrect checksum by inverting the frame CRC, so that the transmitted frame will be detected as an error by the network.

PRODUCT PREVIEW

The EMAC control module is the main interface between the device core processor, the MDIO module, and the EMAC module. The relationship between these three components is shown in Figure 7-42. The EMAC control module contains the necessary components to allow the EMAC to make efficient use of device memory, plus it controls device interrupts. The EMAC control module incorporates 8K-bytes of internal RAM to hold EMAC buffer descriptors.

Figure 7-42 EMAC, MDIO, and EMAC Control Modules

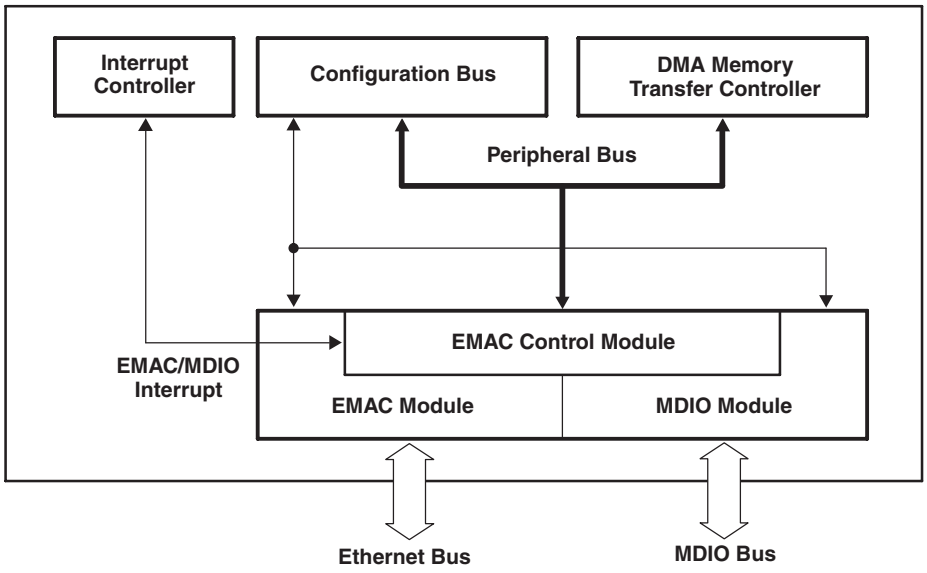

For more detailed information on the EMAC/MDIO, see the *TMS320C6457 DSP EMAC/MDIO Module Reference Guide* (literature number SPRUGK9).

7.14.1 EMAC Device-Specific Information

The EMAC module on the device supports Serial Gigabit Media Independent Interface (SGMII). The SGMII interface conforms to version 1.8 of the industry standard specification.

7.14.2 EMAC Peripheral Register Description(s)

The memory maps of the EMAC are shown in Table 7-86 through Table 7-91.

Table 7-86 Ethernet MAC (EMAC) Control Registers (Part 1 of 4)

Hex Address	Acronym	Register Name
02C8 0000	TXIDVER	Transmit Identification and Version Register
02C8 0004	TXCONTROL	Transmit Control Register
02C8 0008	TXTEARDOWN	Transmit Teardown register
02C8 000F	-	Reserved
02C8 0010	RXIDVER	Receive Identification and Version Register
02C8 0014	RXCONTROL	Receive Control Register
02C8 0018	RXTEARDOWN	Receive Teardown Register
02C8 001C	-	Reserved
02C8 0020 - 02C8 007C	-	Reserved
02C8 0080	TXINTSTATRAW	Transmit Interrupt Status (Unmasked) Register
02C8 0084	TXINTSTATMASKED	Transmit Interrupt Status (Masked) Register
02C8 0088	TXINTMASKSET	Transmit Interrupt Mask Set Register

PRODUCT PREVIEW

Table 7-86 Ethernet MAC (EMAC) Control Registers (Part 2 of 4)

Hex Address	Acronym	Register Name
02C8 008C	TXINTMASKCLEAR	Transmit Interrupt Mask Clear Register
02C8 0090	MACINVECTOR	MAC Input Vector Register
02C8 0094	MACEOIVECTOR	MAC End of Interrupt Vector Register
02C8 0098 - 02C8 019C	-	Reserved
02C8 00A0	RXINTSTATRAW	Receive Interrupt Status (Unmasked) Register
02C8 00A4	RXINTSTATMASKED	Receive Interrupt Status (Masked) Register
02C8 00A8	RXINTMASKSET	Receive Interrupt Mask Set Register
02C8 00AC	RXINTMASKCLEAR	Receive Interrupt Mask Clear Register
02C8 00B0	MACINTSTATRAW	MAC Interrupt Status (Unmasked) Register
02C8 00B4	MACINTSTATMASKED	MAC Interrupt Status (Masked) Register
02C8 00B8	MACINTMASKSET	MAC Interrupt Mask Set Register
02C8 00BC	MACINTMASKCLEAR	MAC Interrupt Mask Clear Register
02C8 00C0 - 02C8 00FC	-	Reserved
02C8 0100	RXMBPENABLE	Receive Multicast/Broadcast/Promiscuous Channel Enable Register
02C8 0104	RXUNICASTSET	Receive Unicast Enable Set Register
02C8 0108	RXUNICASTCLEAR	Receive Unicast Clear Register
02C8 010C	RXMAXLEN	Receive Maximum Length Register
02C8 0110	RXBUFFEROFFSET	Receive Buffer Offset Register
02C8 0114	RXFILTERLOWTHRESH	Receive Filter Low Priority Frame Threshold Register
02C8 0118 - 02C8 011C	-	Reserved
02C8 0120	RX0FLOWTHRESH	Receive Channel 0 Flow Control Threshold Register
02C8 0124	RX1FLOWTHRESH	Receive Channel 1 Flow Control Threshold Register
02C8 0128	RX2FLOWTHRESH	Receive Channel 2 Flow Control Threshold Register
02C8 012C	RX3FLOWTHRESH	Receive Channel 3 Flow Control Threshold Register
02C8 0130	RX4FLOWTHRESH	Receive Channel 4 Flow Control Threshold Register
02C8 0134	RX5FLOWTHRESH	Receive Channel 5 Flow Control Threshold Register
02C8 0138	RX6FLOWTHRESH	Receive Channel 6 Flow Control Threshold Register
02C8 013C	RX7FLOWTHRESH	Receive Channel 7 Flow Control Threshold Register
02C8 0140	RX0FREEBUFFER	Receive Channel 0 Free Buffer Count Register
02C8 0144	RX1FREEBUFFER	Receive Channel 1 Free Buffer Count Register
02C8 0148	RX2FREEBUFFER	Receive Channel 2 Free Buffer Count Register
02C8 014C	RX3FREEBUFFER	Receive Channel 3 Free Buffer Count Register
02C8 0150	RX4FREEBUFFER	Receive Channel 4 Free Buffer Count Register
02C8 0154	RX5FREEBUFFER	Receive Channel 5 Free Buffer Count Register
02C8 0158	RX6FREEBUFFER	Receive Channel 6 Free Buffer Count Register
02C8 015C	RX7FREEBUFFER	Receive Channel 7 Free Buffer Count Register
02C8 0160	MACCONTROL	MAC Control Register
02C8 0164	MACSTATUS	MAC Status Register
02C8 0168	EMCONTROL	Emulation Control Register
02C8 016C	FIFOCONTROL	FIFO Control Register
02C8 0170	MACCONFIG	MAC Configuration Register
02C8 074	SOFTRESET	Soft Reset Register
02C8 01D0	MACSRCADDRLO	MAC Source Address Low Bytes Register
02C8 01D4	MACSRCADDRHI	MAC Source Address High Bytes Register

PRODUCT PREVIEW

Table 7-86 Ethernet MAC (EMAC) Control Registers (Part 3 of 4)

Hex Address	Acronym	Register Name
02C8 01D8	MACHASH1	MAC Hash Address Register 1
02C8 01DC	MACHASH2	MAC Hash Address Register 2
02C8 01E0	BOFFTEST	Back Off Test Register
02C8 01E4	TPACETEST	Transmit Pacing Algorithm Test Register
02C8 01E8	RXPAUSE	Receive Pause Timer Register
02C8 01EC	TXPAUSE	Transmit Pause Timer Register
02C8 0300 - 02C8 03FC	-	Reserved
02C8 0400 - 02C8 04FC	-	Reserved
02C8 0500	MACADDRLO	MAC Address Low Bytes Register (used in Receive Address Matching)
02C8 0504	MACADDRHI	MAC Address High Bytes Register (used in Receive Address Matching)
02C8 0508	MACINDEX	MAC Index Register
02C8 050C - 02C8 05FC	-	Reserved
02C8 0600	TX0HDP	Transmit Channel 0 DMA Head Descriptor Pointer Register
02C8 0604	TX1HDP	Transmit Channel 1 DMA Head Descriptor Pointer Register
02C8 0608	TX2HDP	Transmit Channel 2 DMA Head Descriptor Pointer Register
02C8 060C	TX3HDP	Transmit Channel 3 DMA Head Descriptor Pointer Register
02C8 0610	TX4HDP	Transmit Channel 4 DMA Head Descriptor Pointer Register
02C8 0614	TX5HDP	Transmit Channel 5 DMA Head Descriptor Pointer Register
02C8 0618	TX6HDP	Transmit Channel 6 DMA Head Descriptor Pointer Register
02C8 061C	TX7HDP	Transmit Channel 7 DMA Head Descriptor Pointer Register
02C8 0620	RX0HDP	Receive Channel 0 DMA Head Descriptor Pointer Register
02C8 0624	RX1HDP	Receive t Channel 1 DMA Head Descriptor Pointer Register
02C8 0628	RX2HDP	Receive Channel 2 DMA Head Descriptor Pointer Register
02C8 062C	RX3HDP	Receive t Channel 3 DMA Head Descriptor Pointer Register
02C8 0630	RX4HDP	Receive Channel 4 DMA Head Descriptor Pointer Register
02C8 0634	RX5HDP	Receive t Channel 5 DMA Head Descriptor Pointer Register
02C8 0638	RX6HDP	Receive Channel 6 DMA Head Descriptor Pointer Register
02C8 063C	RX7HDP	Receive t Channel 7 DMA Head Descriptor Pointer Register
02C8 0640	TX0CP	Transmit Channel 0 Completion Pointer (Interrupt Acknowledge) Register
02C8 0644	TX1CP	Transmit Channel 1 Completion Pointer (Interrupt Acknowledge) Register
02C8 0648	TX2CP	Transmit Channel 2 Completion Pointer (Interrupt Acknowledge) Register
02C8 064C	TX3CP	Transmit Channel 3 Completion Pointer (Interrupt Acknowledge) Register
02C8 0650	TX4CP	Transmit Channel 4 Completion Pointer (Interrupt Acknowledge) Register
02C8 0654	TX5CP	Transmit Channel 5 Completion Pointer (Interrupt Acknowledge) Register
02C8 0658	TX6CP	Transmit Channel 6 Completion Pointer (Interrupt Acknowledge) Register
02C8 065C	TX7CP	Transmit Channel 7 Completion Pointer (Interrupt Acknowledge) Register
02C8 0660	RX0CP	Receive Channel 0 Completion Pointer (Interrupt Acknowledge) Register
02C8 0664	RX1CP	Receive Channel 1 Completion Pointer (Interrupt Acknowledge) Register
02C8 0668	RX2CP	Receive Channel 2 Completion Pointer (Interrupt Acknowledge) Register
02C8 066C	RX3CP	Receive Channel 3 Completion Pointer (Interrupt Acknowledge) Register
02C8 0670	RX4CP	Receive Channel 4 Completion Pointer (Interrupt Acknowledge) Register
02C8 0674	RX5CP	Receive Channel 5 Completion Pointer (Interrupt Acknowledge) Register
02C8 0678	RX6CP	Receive Channel 6 Completion Pointer (Interrupt Acknowledge) Register
02C8 067C	RX7CP	Receive Channel 7 Completion Pointer (Interrupt Acknowledge) Register

PRODUCT PREVIEW

Table 7-86 Ethernet MAC (EMAC) Control Registers (Part 4 of 4)

Hex Address	Acronym	Register Name
02C8 0680 - 02C8 06FC	-	Reserved
02C8 0700 - 02C8 077C	-	Reserved
02C8 0780 - 02C8 0FFF	-	Reserved
End of Table 7-86		

Table 7-87 EMAC Statistics Registers (Part 1 of 2)

Hex Address	Acronym	Register Name
02C8 0200	RXGOODFRAMES	Good Receive Frames Register
02C8 0204	RXBCASTFRAMES	Broadcast Receive Frames Register (Total number of Good Broadcast Frames Receive)
02C8 0208	RXMCASTFRAMES	Multicast Receive Frames Register (Total number of Good Multicast Frames Received)
02C8 020C	RXPAUSEFRAMES	Pause Receive Frames Register
02C8 0210	RXCRCERRORS	Receive CRC Errors Register (Total number of Frames Received with CRC Errors)
02C8 0214	RXALIGNCODEERRORS	Receive Alignment/Code Errors register (Total number of frames received with alignment/code errors)
02C8 0218	RXOVERSIZED	Receive Oversized Frames Register (Total number of Oversized Frames Received)
02C8 021C	RXJABBER	Receive Jabber Frames Register (Total number of Jabber Frames Received)
02C8 0220	RXUNDERSIZED	Receive Undersized Frames Register (Total number of Undersized Frames Received)
02C8 0224	RXFRAGMENTS	Receive Frame Fragments Register
02C8 0228	RXFILTERED	Filtered Receive Frames Register
02C8 022C	RXQOSFILTERERED	Received QOS Filtered Frames Register
02C8 0230	RXOCTETS	Receive Octet Frames Register (Total number of Received Bytes in Good Frames)
02C8 0234	TXGOODFRAMES	Good Transmit Frames Register (Total number of Good Frames Transmitted)
02C8 0238	TXBCASTFRAMES	Broadcast Transmit Frames Register
02C8 023C	TXMCASTFRAMES	Multicast Transmit Frames Register
02C8 0240	TXPAUSEFRAMES	Pause Transmit Frames Register
02C8 0244	TXDEFERED	Deferred Transmit Frames Register
02C8 0248	TXCOLLISION	Transmit Collision Frames Register
02C8 024C	TXSINGLECOLL	Transmit Single Collision Frames Register
02C8 0250	TXMULTICOLL	Transmit Multiple Collision Frames Register
02C8 0254	TXEXCESSIVECOLL	Transmit Excessive Collision Frames Register
02C8 0258	TXLATECOLL	Transmit Late Collision Frames Register
02C8 025C	TXUNDERRUN	Transmit Under Run Error Register
02C8 0260	TXCARRIERSENSE	Transmit Carrier Sense Errors Register
02C8 0264	TXOCTETS	Transmit Octet Frames Register
02C8 0268	FRAME64	Transmit and Receive 64 Octet Frames Register
02C8 026C	FRAME65T127	Transmit and Receive 65 to 127 Octet Frames Register
02C8 0270	FRAME128T255	Transmit and Receive 128 to 255 Octet Frames Register
02C8 0274	FRAME256T511	Transmit and Receive 256 to 511 Octet Frames Register
02C8 0278	FRAME512T1023	Transmit and Receive 512 to 1023 Octet Frames Register
02C8 027C	FRAME1024TUP	Transmit and Receive 1024 to 1518 Octet Frames Register
02C8 0280	NETOCTETS	Network Octet Frames Register
02C8 0284	RXSOFOVERRUNS	Receive FIFO or DMA Start of Frame Overruns Register
02C8 0288	RXMOFOVERRUNS	Receive FIFO or DMA Middle of Frame Overruns Register

PRODUCT PREVIEW

Table 7-87 EMAC Statistics Registers (Part 2 of 2)

Hex Address	Acronym	Register Name
02C8 028C	RXDMAOVERRUNS	Receive DMA Start of Frame and Middle of Frame Overruns Register
02C8 0290 - 02C8 02FC	-	Reserved
End of Table 7-87		

Table 7-88 EMAC Descriptor Memory

Hex Address	Acronym	Register Name
02E0 0000 - 02E0 3FFF	-	EMAC Descriptor Memory
End of Table 7-88		

Table 7-89 SGMII Control Registers

Hex Address	Acronym	Register Name
02C4 0000	IDVER	Identification and Version register
02C4 0004	SOFT_RESET	Software Reset Register
02C4 0010	CONTROL	Control Register
02C4 0014	STATUS	Status Register
02C4 0018	MR_ADV_ABILITY	Advertised Ability Register
02C4 001C	-	Reserved
02C4 0020	MR_LP_ADV_ABILITY	Link Partner Advertised Ability Register
02C4 0024	-	Reserved
02C4 0030	TX_CFG	Transmit Configuration Register
02C4 0034	RX_CFG	Receive Configuration Register
02C4 0038	AUX_CFG	Auxiliary Configuration Register
02C4 0040 - 02C4 0048	-	Reserved
End of Table 7-89		

Table 7-90 EMIC Control Registers

Hex Address	Acronym	Register Name
02C8 1000	IDVER	Identification and Version register
02C8 1004	SOFT_RESET	Software Reset Register
02C8 1008	EM_CONTROL	Emulation Control Register
02C8 100C	INT_CONTROL	Interrupt Control Register
02C8 1010	C_RX_THRESH_EN	Receive Threshold Interrupt Enable Register
02C8 1014	C_RX_EN	Receive Interrupt Enable Register
02C8 1018	C_TX_EN	Transmit Interrupt Enable Register
02C8 101C	C_MISC_EN	Misc Interrupt Enable Register
02C8 1040	C_RX_THRESH_STAT	Receive Threshold Masked Interrupt Status Register
02C8 1044	C_RX_STAT	Receive Interrupt Masked Interrupt Status Register
02C8 1048	C_TX_STAT	Transmit Interrupt Masked Interrupt Status Register
02C8 104C	C_MISC_STAT	Misc Interrupt Masked Interrupt Status Register
02C8 1070	C_RX_IMAX	Receive Interrupts Per Millisecond
02C8 1074	C_TX_IMAX	Transmit Interrupts Per Millisecond
End of Table 7-90		

PRODUCT PREVIEW

7.14.3 EMAC Electrical Data/Timing (SGMII)

The *TMS320TCI6484 and TMS320C6457 DSPs Hardware Design Guide* application report (literature number SPRAAV7) specifies a complete EMAC and SGMII interface solutions for the C6457 as well as a list of compatible EMAC and SGMII devices. TI has performed the simulation and system characterization to ensure all EMAC and SGMII interface timings in this solution are met; therefore, no electrical data/timing information is supplied here for this interface.

Note—TI supports ***only*** designs that follow the board design guidelines outlined in the application report.

7.15 Management Data Input/Output (MDIO)

The Management Data Input/Output (MDIO) module implements the 802.3 serial management interface to interrogate and controls up to 32 Ethernet PHY(s) connected to the device, using a shared two-wire bus. Application software uses the MDIO module to configure the auto-negotiation parameters of each PHY attached to the EMAC, retrieve the negotiation results, and configure required parameters in the EMAC module for correct operation. The module is designed to allow almost transparent operation of the MDIO interface, with very little maintenance from the core processor.

The EMAC control module is the main interface between the device core processor, the MDIO module, and the EMAC module. The relationship between these three components is shown in Figure 7-42.

For more detailed information on the EMAC/MDIO, see the *TMS320C6457 DSP EMAC/MDIO Module Reference Guide* (literature number SPRUGK9).

7.15.1 MDIO Peripheral Register Description(s)

The memory map of the MDIO is shown in Table 7-91.

Table 7-91 MDIO Registers

Hex Address	Acronym	Register Name
02C8 1800	VERSION	MDIO Version Register
02C8 1804	CONTROL	MDIO Control Register
02C8 1808	ALIVE	MDIO PHY Alive Status Register
02C8 180C	LINK	MDIO PHY Link Status Register
02C8 1810	LINKINTRAW	MDIO link Status Change Interrupt (unmasked) Register
02C8 1814	LINKINTMASKED	MDIO link Status Change Interrupt (masked) Register
02C8 1818 - 02C8 181C	-	Reserved
02C8 1820	USERINTRAW	MDIO User Command Complete Interrupt (Unmasked) Register
02C8 1824	USERINTMASKED	MDIO User Command Complete Interrupt (Masked) Register
02C8 1828	USERINTMASKSET	MDIO User Command Complete Interrupt Mask Set Register
02C8 182C	USERINTMASKCLEAR	MDIO User Command Complete Interrupt Mask Clear Register
02C8 1830 - 02C8 187C	-	Reserved
02C8 1880	USERACCESS0	MDIO User Access Register 0
02C8 1884	USERPHYSEL0	MDIO User PHY Select Register 0
02C8 1888	USERACCESS1	MDIO User Access Register 1
02C8 188C	USERPHYSEL1	MDIO User PHY Select Register 1
02C8 1890 - 02C8 1FFF	-	Reserved
End of Table 7-91		

PRODUCT PREVIEW

PRODUCT PREVIEW

7.15.2 MDIO Electrical Data/Timing

Table 7-92 MDIO Input Timing Requirements
(see Figure 7-43)

No.			Min	Max	Unit
1	$t_{c(MDCLK)}$	Cycle time, MDCLK	400		ns
2a	$t_{w(MDCLKH)}$	Pulse duration, MDCLK high	180		ns
2b	$t_{w(MDCLKL)}$	Pulse duration, MDCLK low	180		ns
3	$t_{t(MDCLK)}$	Transition time, MDCLK		5	ns
4	$t_{su(MDIO-MDCLKH)}$	Setup time, MDIO data input valid before MDCLK high	10		ns
5	$t_{h(MDCLKH-MDIO)}$	Hold time, MDIO data input valid after MDCLK high	10		ns
End of Table 7-92					

Figure 7-43 MDIO Input Timing

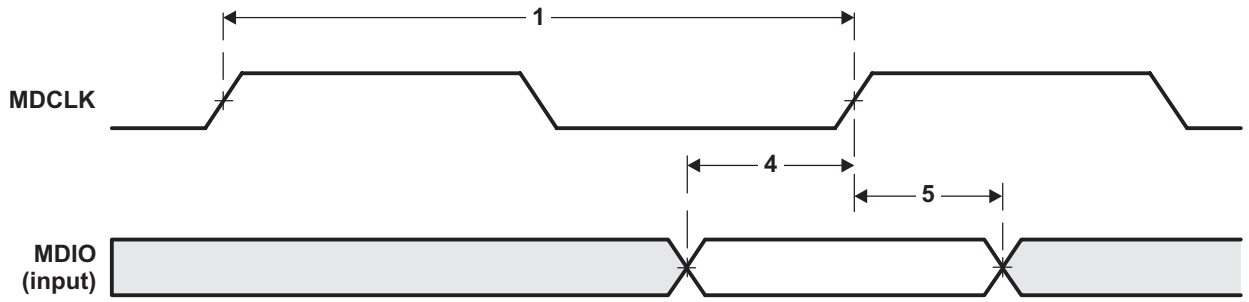

Table 7-93 MDIO Output Switching Characteristics [1]
(see Figure 7-44)

No.	Parameter		Min	Max	Unit
7	$t_{d(MDCLKL-MDIO)}$	Delay time, MDCLK low to MDIO data output valid	100		ns
End of Table 7-93					

1 Over recommended operating conditions.

Figure 7-44 MDIO Output Timing

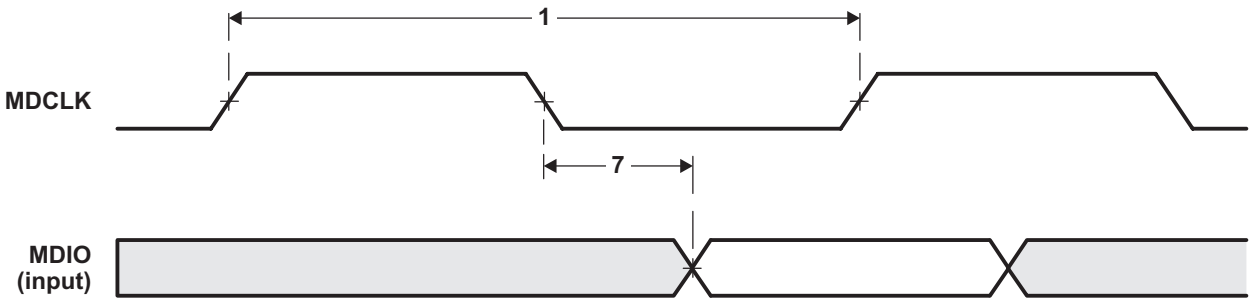

7.16 Timers

The timers can be used to: time events, count events, generate pulses, interrupt the CPU, and send synchronization events to the EDMA3 channel controller.

7.16.1 Timers Device-Specific Information

The TMS320C6457 device has two general-purpose timers, Timer0 and Timer1, each of which can be configured as a general-purpose timer or as a watchdog timer. When configured as a general-purpose timer, each timer can be programmed as a 64-bit timer or as two separate 32-bit timers.

Each timer is made up of two 32-bit counters: a high counter and a low counter. The timer pins, TINPLx and TOUTLx are connected to the low counter. The high counter does not have any external device pins.

7.16.1.1 Timer Watchdog Select

As mentioned previously, the timers can operate in watchdog mode. When in watchdog mode, the event output from Timer1 can optionally reset the CPU. In order for the event to trigger the reset when this operation is desired, the Timer1 watchdog reset selection register (WDRSTSEL) should be set to 1. The WDRSTSEL register is shown in Table 7-94 and described in Table 7-95.

Table 7-94 Timer1 Watchdog Reset Selection Register (WDRSTSEL)

Address - 0288 0920h																
Bit	31	30	29	28	27	26	25	24	23	22	21	20	19	18	17	16
Acronym	Reserved															
Reset (1)																
Bit	15	14	13	12	11	10	9	8	7	6	5	4	3	2	1	0
Acronym	Reserved															WDRSTSEL
Reset (1)	R- 0000 0000 0000 0000 0000 0000 0000 000															R/W-0

1 R/W = Read/Write; R = Read only; *-n* = value after reset

Table 7-95 Timer1 Watchdog Reset Selection Register (WDRSTSEL) Field Descriptions

Bit	Acronym	Description
31:1	Reserved	Reserved.
0	WRDSTSEL	Reset Select for Watchdog Timer1 0 = TOUT1L does not cause a reset to the C64x+ megamodule (default) 1 = TOUT1L causes a reset to the C64x+ megamodule
End of Table 7-95		

7.16.2 Timers Peripheral Register Description(s)

Table 7-96 Timer 0 Registers (Part 1 of 2)

Hex Address Range	Acronym	Register Name
0294 0000	-	Reserved
0294 0004	EMUMGT_CLKSPD0	Timer 0 Emulation Management/Clock Speed Register
0294 0008	-	Reserved
0294 000C	-	Reserved
0294 0010	CNTLO0	Timer 0 Counter Register Low
0294 0014	CNTHI0	Timer 0 Counter Register High
0294 0018	PRDLO0	Timer 0 Period Register Low
0294 001C	PRDHI0	Timer 0 Period Register High
0294 0020	TCR0	Timer 0 Control Register
0294 0024	TGCR0	Timer 0 Global Control Register
0294 0028	WDTCR0	Timer 0 Watchdog Timer Control Register
0294 002C	-	Reserved

PRODUCT PREVIEW

Table 7-96 Timer 0 Registers (Part 2 of 2)

Hex Address Range	Acronym	Register Name
0294 0030	-	Reserved
0294 0034 - 0297 FFFF	-	Reserved
End of Table 7-96		

Table 7-97 Timer 1 Registers

Hex Address Range	Acronym	Register Name
0298 0000	-	Reserved
0298 0004	EMUMGT_CLKSPD1	Timer 1 Emulation Management/Clock Speed Register
0298 0008	-	Reserved
0298 000C	-	Reserved
0298 0010	CNTLO1	Timer 1 Counter Register Low
0298 0014	CNTHI1	Timer 1 Counter Register High
0298 0018	PRDLO1	Timer 1 Period Register Low
0298 001C	PRDHI1	Timer 1 Period Register High
0298 0020	TCR1	Timer 1 Control Register
0298 0024	TGCR1	Timer 1 Global Control Register
0298 0028	WDTCR1	Timer 1 Watchdog Timer Control Register
0298 002C	-	Reserved
0298 0030	-	Reserved
0298 0034 - 0299 FFFF	-	Reserved
End of Table 7-97		

PRODUCT PREVIEW

7.16.3 Timers Electrical Data/Timing

The below tables and figures describe the timing requirements and switching characteristics of both the Timer0 and Timer1 peripherals.

Table 7-98 Timer Input Timing Requirements [1]
(see Figure 7-45)

No.			Min	Max	Unit
1	$t_{w(TIMIH)}$	Pulse duration, TIMI high	12C		ns
2	$t_{w(TIMIL)}$	Pulse duration, TIMI low	12C		ns
End of Table 7-98					

1 If CORECLKSEL = 0, C = 1/CORECLK(NIP) frequency in ns. If CORECLKSEL = 1, C = 1/ALTCORECLK frequency in ns.

Table 7-99 Timer Output Switching Characteristics [1] [2]
(see Figure 7-45)

No.	Parameter		Min	Max	Unit
3	$t_{w(TIMOH)}$	Pulse duration, TIMO high	12C - 3		ns
4	$t_{w(TIMOL)}$	Pulse duration, TIMO low	12C - 3		ns
End of Table 7-99					

1 Over recommended operating conditions.
2 If CORECLKSEL = 0, C = 1/CORECLK(NIP) frequency in ns. If CORECLKSEL = 1, C = 1/ALTCORECLK frequency in ns.

Figure 7-45 Timer Timing

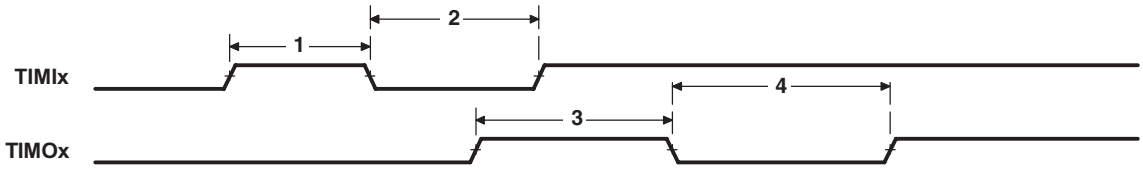

7.17 Enhanced Viterbi-Decoder Coprocessor (VCP2)

7.17.1 VCP2 Device-Specific Information

The TMS320C6457 device has a high-performance embedded Viterbi-Decoder Coprocessor (VCP2) that significantly speeds up channel-decoding operations on-chip. The VCP2, operating at CPU clock divided-by-3, can decode more than 694 7.95-Kbps adaptive multi-rate (AMR) [K = 9, R = 1/3] voice channels. The VCP2 supports constraint lengths K = 5, 6, 7, 8, and 9, rates R = 3/4, 1/2, 1/3, 1/4, and 1/5, and flexible polynomials, while generating hard decisions or soft decisions. Communications between the VCP2 and the CPU are carried out through the EDMA3 controller.

The VCP2 supports:

- Unlimited frame sizes
- Code rates 3/4, 1/2, 1/3, 1/4, and 1/5
- Constraint lengths 5, 6, 7, 8, and 9
- Programmable encoder polynomials
- Programmable reliability and convergence lengths
- Hard and soft decoded decisions
- Tail and convergent modes
- Yamamoto logic
- Tail biting logic
- Various input and output FIFO lengths

For more detailed information on the VCP2, see the *TMS320C6457 DSP Viterbi-Decoder Coprocessor 2 (VCP2) Reference Guide* (literature number SPRUGK0).

7.17.2 VCP2 Peripheral Register Description

Table 7-100 VCP2 Registers (Part 1 of 2)

EDMA Bus Hex Address Range	Configuration Bus Hex Address Range	Acronym	Register Name
5800 0000	-	VCPIC0	VCP2 Input Configuration Register 0
5800 0004	-	VCPIC1	VCP2 Input Configuration Register 1
5800 0008	-	VCPIC2	VCP2 Input Configuration Register 2
5800 000C	-	VCPIC3	VCP2 Input Configuration Register 3
5800 0010	-	VCPIC4	VCP2 Input Configuration Register 4
5800 0014	-	VCPIC5	VCP2 Input Configuration Register 5
5800 0018 - 5800 0044		-	Reserved
5800 0048	-	VCPOUT0	VCP2 Output Register 0
5800 004C	-	VCPOUT1	VCP2 Output Register 1
5800 0050 - 5800 007C		-	Reserved
5800 0080	N/A	VCPWBM	VCP2 Branch Metrics Write FIFO Register
5800 0084 - 5800 009C		-	Reserved

PRODUCT PREVIEW

PRODUCT PREVIEW

Table 7-100 VCP2 Registers (Part 2 of 2)

EDMA Bus Hex Address Range	Configuration Bus Hex Address Range	Acronym	Register Name
5800 00C0	N/A	VCPRDECS	VCP2 Decisions Read FIFO Register
N/A	02B8 0000	VCPPID	VCP2 Peripheral ID Register
N/A	02B8 0018	VCPEXE	VCP2 Execution Register
N/A	02B8 0020	VCPEND	VCP2 Endian Mode Register
N/A	02B8 0040	VCPSTAT0	VCP2 Status Register 0
N/A	02B8 0044	VCPSTAT1	VCP2 Status Register 1
N/A	02B8 0050	VCPERR	VCP2 Error Register
-	-	-	Reserved
N/A	02B8 0060	VCPEMU	VCP2 Emulation Control Register
N/A	02B8 0064 - 02B9 FFFF	-	Reserved
5800 1000	-	BM	Branch Metrics
5800 2000	-	SM	State Metric
5800 3000	-	TBHD	Traceback Hard Decision
5800 6000	-	TBSD	Traceback Soft Decision
5800 F000	-	IO	Decoded Bits
End of Table 7-100			

7.18 Enhanced Turbo Decoder Coprocessor (TCP2)

7.18.1 TCP2 Device-Specific Information

The C6457 device has two high-performance embedded Turbo-Decoder Coprocessors (TCP2_A and TCP2_B) that significantly speed up channel-decoding operations on-chip. Each TCP2, operating at CPU clock divided-by-3, can decode up to fifty 384-Kbps or eight 2-Mbps turbo-encoded channels (assuming 6 iterations). The TCP2 implements the max * log-map algorithm and is designed to support all polynomials and rates required by Third-Generation Partnership Projects (3GPP and 3GPP2), with fully programmable frame length and turbo interleaver. Decoding parameters such as the number of iterations and stopping criteria are also programmable. Communications between the TCP2 and the CPU are carried out through the EDMA3 controller.

Each TCP2 supports:

- Parallel concatenated convolutional turbo decoding using the MAP algorithm
- All turbo code rates greater than or equal to 1/5
- 3GPP and CDMA2000 turbo encoder trellis
- 3GPP and CDMA2000 block sizes in standalone mode
- Larger block sizes in shared processing mode
- Both max log MAP and log MAP decoding
- Sliding windows algorithm with variable reliability and prolog lengths
- The prolog reduction algorithm
- Execution of a minimum and maximum number of iterations
- The SNR stopping criteria algorithm
- The CRC stopping criteria algorithm

For more detailed information on the TCP2, see the *TMS320C6457 DSP Turbo-Decoder Coprocessor 2 (TCP2) Reference Guide* (literature number SPRUGK1).

Table 7-101 TCP2_A Registers

EDMA Bus Hex Address Range	Configuration Bus Hex Address Range	Acronym	Register Name
5000 0000	-	TCPIC0	TCP2 Input Configuration Register 0
5000 0004	-	TCPIC1	TCP2 Input Configuration Register 1
5000 0008	-	TCPIC2	TCP2 Input Configuration Register 2
5000 000C	-	TCPIC3	TCP2 Input Configuration Register 3
5000 0010	-	TCPIC4	TCP2 Input Configuration Register 4
5000 0014	-	TCPIC5	TCP2 Input Configuration Register 5
5000 0018	-	TCPIC6	TCP2 Input Configuration Register 6
5000 001C	-	TCPIC7	TCP2 Input Configuration Register 7
5000 0020	-	TCPIC8	TCP2 Input Configuration Register 8
5000 0024	-	TCPIC9	TCP2 Input Configuration Register 9
5000 0028	-	TCPIC10	TCP2 Input Configuration Register 10
5000 002C	-	TCPIC11	TCP2 Input Configuration Register 11
5000 0030	-	TCPIC12	TCP2 Input Configuration Register 12
5000 0034	-	TCPIC13	TCP2 Input Configuration Register 13
5000 0038	-	TCPIC14	TCP2 Input Configuration Register 14
5000 003C	-	TCPIC15	TCP2 Input Configuration Register 15
5000 0040	-	TCPOUT0	TCP2 Output Parameters Register 0
5000 0044	-	TCPOUT1	TCP2 Output Parameters Register 1
5000 0048	-	TCPOUT2	TCP2 Output Parameters Register 2
5001 0000	N/A	X0	TCP2 Data/Sys and Parity Memory
5003 0000	N/A	W0	TCP2 Extrinsic Mem 0
5004 0000	N/A	W1	TCP2 Extrinsic Mem 1
5005 0000	N/A	I0	TCP2 Interleaver Memory
5006 0000	N/A	O0	TCP2 Output/Decision Memory
5007 0000	N/A	S0	TCP2 Scratch Pad Memory
5008 0000	N/A	T0	TCP2 Beta State Memory
5009 0000	N/A	C0	TCP2 CRC Memory
500A 0000	N/A	B0	TCP2 Beta Prolog Memory
500B 0000	N/A	A0	TCP2 Alpha Prolog Memory
	02BA 0000	TCPPID	TCP2 Peripheral Identification Register
N/A	02BA 004C	TCPEXE	TCP2 Execute Register
N/A	02BA 0050	TCPEND	TCP2 Endianness Register
N/A	02BA 0060	TCPERR	TCP2 Error Register
N/A	02BA 0068	TCPSTAT	TCP2 Status Register
N/A	02BA 0070	TCPEMU	TCP2 Emulation Register
N/A	02BA 0074 - 02BA 00FF	-	Reserved
End of Table 7-101			

Table 7-102 TCP2_B Registers (Part 1 of 2)

EDMA Bus Hex Address Range	Configuration Bus Hex Address Range	Acronym	Register Name
5010 0000	-	TCPIC0	TCP2 Input Configuration Register 0
5010 0004	-	TCPIC1	TCP2 Input Configuration Register 1
5010 0008	-	TCPIC2	TCP2 Input Configuration Register 2

PRODUCT PREVIEW

Table 7-102 TCP2_B Registers (Part 2 of 2)

EDMA Bus Hex Address Range	Configuration Bus Hex Address Range	Acronym	Register Name
5010 000C	-	TCPIC3	TCP2 Input Configuration Register 3
5010 0010	-	TCPIC4	TCP2 Input Configuration Register 4
5010 0014	-	TCPIC5	TCP2 Input Configuration Register 5
5010 0018	-	TCPIC6	TCP2 Input Configuration Register 6
5010 001C	-	TCPIC7	TCP2 Input Configuration Register 7
5010 0020	-	TCPIC8	TCP2 Input Configuration Register 8
5010 0024	-	TCPIC9	TCP2 Input Configuration Register 9
5010 0028	-	TCPIC10	TCP2 Input Configuration Register 10
5010 002C	-	TCPIC11	TCP2 Input Configuration Register 11
5010 0030	-	TCPIC12	TCP2 Input Configuration Register 12
5010 0034	-	TCPIC13	TCP2 Input Configuration Register 13
5010 0038	-	TCPIC14	TCP2 Input Configuration Register 14
5010 003C	-	TCPIC15	TCP2 Input Configuration Register 15
5010 0040	-	TCPOUT0	TCP2 Output Parameters Register 0
5010 0044	-	TCPOUT1	TCP2 Output Parameters Register 1
5010 0048	-	TCPOUT2	TCP2 Output Parameters Register 2
5011 0000	N/A	X0	TCP2 Data/Sys and Parity Memory
5013 0000	N/A	W0	TCP2 Extrinsic Mem 0
5014 0000	N/A	W1	TCP2 Extrinsic Mem 1
5015 0000	N/A	I0	TCP2 Interleaver Memory
5016 0000	N/A	O0	TCP2 Output/Decision Memory
5017 0000	N/A	S0	TCP2 Scratch Pad Memory
5018 0000	N/A	T0	TCP2 Beta State Memory
5019 0000	N/A	C0	TCP2 CRC Memory
501A 0000	N/A	B0	TCP2 Beta Prolog Memory
501B 0000	N/A	A0	TCP2 Alpha Prolog Memory
	02BA 0100	TCPPID	TCP2 Peripheral Identification Register
N/A	02BA 014C	TCPEXE	TCP2 Execute Register
N/A	02BA 0150	TCPEND	TCP2 Endianness Register
N/A	02BA 0160	TCPERR	TCP2 Error Register
N/A	02BA 0168	TCPSTAT	TCP2 Status Register
N/A	02BA 0170	TCPEMU	TCP2 Emulation Register
N/A	02BA 0174 - 02BB FFFF	-	Reserved
End of Table 7-102			

PRODUCT PREVIEW

7.19 UTOPIA

7.19.1 UTOPIA Device-Specific Information

The Universal Test and Operations PHY Interface for ATM (UTOPIA) peripheral is a 50 MHz, 8-Bit Slave-only interface. The UTOPIA is more simplistic than the Ethernet MAC, in that the UTOPIA is serviced directly by the EDMA3 controller. The UTOPIA peripheral contains two, two-cell FIFOs, one for transmit and one for receive, with which to buffer up data sent/received across the pins. There is a transmit and a receive event to the EDMA3 channel controller to enable servicing.

For more detailed information on the UTOPIA peripheral, see the *TMS320C6457 DSP Universal Test and Operations PHY Interface for ATM 2 (UTOPIA2)* (literature number SPRUGL1).

7.19.2 UTOPIA Peripheral Register Description(s)

Table 7-103 UTOPIA Registers

Hex Address Range	Acronym	Register Name
02B4 0000	UCR	UTOPIA Control Register
02B4 0004	-	Reserved
02B4 0008	-	Reserved
02B4 000C	-	Reserved
02B4 0010	-	Reserved
02B4 0014	CDR	Clock Detect Register
02B4 0018	EIER	Error Interrupt Enable Register
02B4 001C	EIPR	Error Interrupt Pending Register
02B4 0020 - 02B4 01FF	-	Reserved
02B4 0200 - 02B7 FFFF	-	Reserved
End of Table 7-103		

Table 7-104 UTOPIA Data Queues (Receive and Transmit) Registers

Hex Address Range	Acronym	Register Name
3D00 0000 - 3D00 007F	URQ	UTOPIA Receive (RX) Data Queue
3D00 0080 - 3D00 03FF	-	Reserved
3D00 0400 - 3D00 047F	UXQ	UTOPIA Transmit (TX) Data Queue
3D00 0480 - 3D00 07FF	-	Reserved
End of Table 7-104		

7.19.3 UTOPIA Electrical Data/Timing

Table 7-105 UXCLK Timing Requirements [1]
(see Figure 7-46)

No.			Min	Max	Unit
1	$t_{c(UXCK)}$	Cycle time, UXCLK	20		ns
2	$t_{w(UXCKH)}$	Pulse duration, UXCLK high	$0.4t_{c(UXCK)}$	$0.6t_{c(UXCK)}$	ns
3	$t_{w(UXCKL)}$	Pulse duration, UXCLK low	$0.4t_{c(UXCK)}$	$0.6t_{c(UXCK)}$	ns
4	$t_{t(UXCK)}$	Transition time, UXCLK		2	ns
End of Table 7-105					

1 The reference points for the rise and fall transitions are measured at V_{IL} MAX and V_{IH} MIN.

PRODUCT PREVIEW

PRODUCT PREVIEW

Figure 7-46 UXCLK Timing

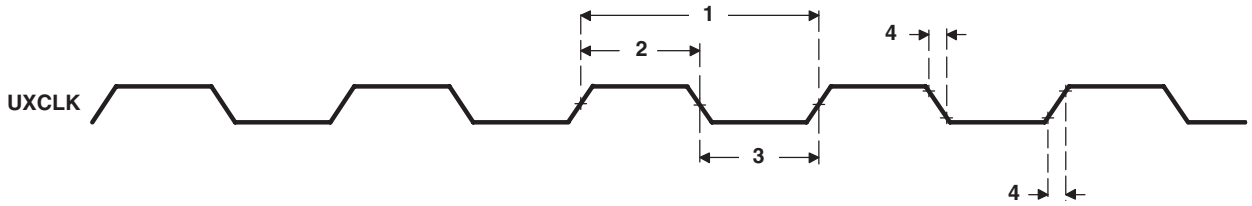

Table 7-106 URCLK Timing Requirements [1]
(see Figure 7-47)

No.			Min	Max	Unit
1	$t_{c(URCK)}$	Cycle time, URCLK	20		ns
2	$t_{w(URCKH)}$	Pulse duration, URCLK high	$0.4t_{c(URCK)}$	$0.6t_{c(URCK)}$	ns
3	$t_{w(URCKL)}$	Pulse duration, URCLK low	$0.4t_{c(URCK)}$	$0.6t_{c(URCK)}$	ns
4	$t_{t(URCK)}$	Transition time, URCLK		2	ns
End of Table 7-106					

1 The reference points for the rise and fall transitions are measured at V_{IL} MAX and V_{IH} MIN.

Figure 7-47 URCLK Timing

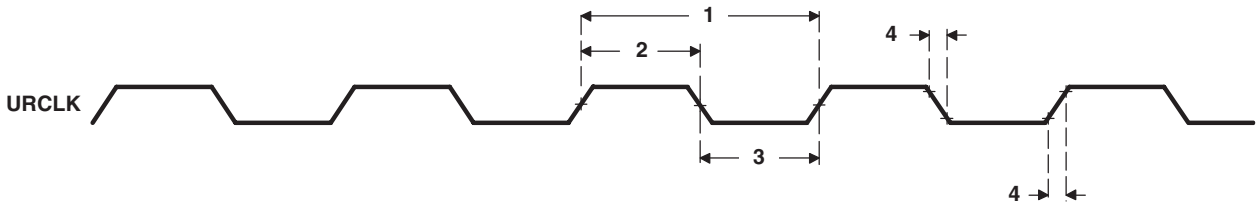

Table 7-107 UTOPIA Slave Transmit Timing Requirements
(see Figure 7-48)

No.			Min	Max	Unit
2	$t_{su(UXAV-UXCH)}$	Setup time, UXADDR valid before UXCLK high	4		ns
3	$t_{h(UXCH-UXAV)}$	Hold time, UXADDR valid after UXCLK high	1		ns
8	$t_{su(UXENBL-UXCH)}$	Setup time, $\overline{\text{UXENB}}$ low before UXCLK high	4		ns
9	$t_{h(UXCH-UXENBL)}$	Hold time, $\overline{\text{UXENB}}$ low after UXCLK high	1		ns
End of Table 7-107					

Table 7-108 UTOPIA Slave Transmit Cycles Switching Characteristics [1]
(see Figure 7-48)

No.		Parameter	Min	Max	Unit
1	$t_{d(UXCH-UXDV)}$	Delay time, UXCLK high to UXDATA valid	2	12	ns
4	$t_{d(UXCH-UXCLAV)}$	Delay time, UXCLK high to UXCLAV driven active value	2	12	ns
5	$t_{d(UXCH-UXCLAVL)}$	Delay time, UXCLK high to UXCLAV driven inactive low	2	12	ns
6	$t_{d(UXCH-UXCLAVHZ)}$	Delay time, UXCLK high to UXCLAV going Hi-Z	9	18.5	ns
7	$t_{w(UXCLAVL-UXCLAVHZ)}$	Pulse duration (low), UXCLAV low to UXCLAV Hi-Z	2		ns
10	$t_{d(UXCH-UXSV)}$	Delay time, UXCLK high to UXSOC valid	2	12	ns
End of Table 7-108					

1 Over recommended operating conditions.

 2009 Texas Instruments Incorporated

Figure 7-48 UTOPIA Slave Transmit Timing(A)

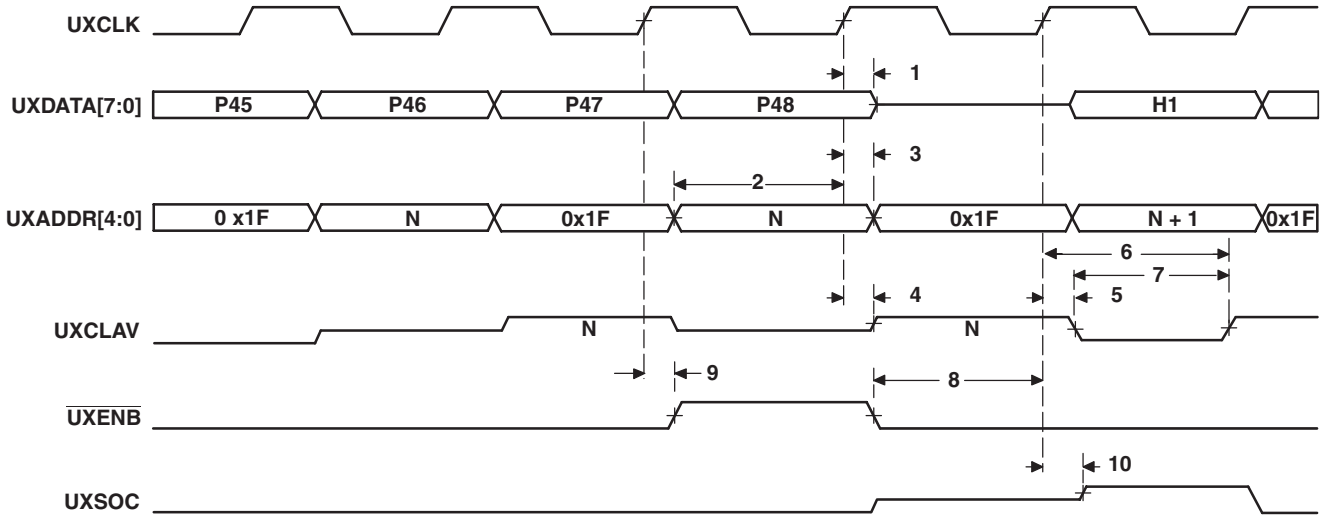

(A) The UTOPIA slave module has signals that are middle-level signals indicating a high-impedance state (i.e., the UXCLAV and UXSOC signals).

Table 7-109 UTOPIA Slave Receive Timing Requirements
(see Figure 7-49)

No.			Min	Max	Unit
1	$t_{su(URDV-URCH)}$	Setup time, URDATA valid before URCLK high	4		ns
2	$t_{h(URCH-URDV)}$	Hold time, URDATA valid after URCLK high	1		ns
3	$t_{su(URAV-URCH)}$	Setup time, URADDR valid before URCLK high	4		ns
4	$t_{h(URCH-URAV)}$	Hold time, URADDR valid after URCLK high	1		ns
9	$t_{su(URENBL-URCH)}$	Setup time, $\overline{\text{URENB}}$ low before URCLK high	4		ns
10	$t_{h(URCH-URENBL)}$	Hold time, $\overline{\text{URENB}}$ low after URCLK high	1		ns
11	$t_{su(URSH-URCH)}$	Setup time, URSOC high before URCLK high	4		ns
12	$t_{h(URCH-URSH)}$	Hold time, URSOC high after URCLK high	1		ns
End of Table 7-109					

Table 7-110 Switching Characteristics for UTOPIA Slave Receive Cycles (1)
(see Figure 7-49)

No.	Parameter		Min	Max	Unit
5	$t_{d(URCH-URCLAV)}$	Delay time, URCLK high to URCLAV driven active value	3	12	ns
6	$t_{d(URCH-URCLAVL)}$	Delay time, URCLK high to URCLAV driven inactive low	3	12	ns
7	$t_{d(URCH-URCLAVHZ)}$	Delay time, URCLK high to URCLAV going Hi-Z	9	18.5	ns
8	$t_{w(URCLAVL-URCLAVHZ)}$	Pulse duration (low), URCLAV low to URCLAV Hi-Z	3		ns
End of Table 7-110					

1 Over recommended operating conditions.

PRODUCT PREVIEW

Figure 7-49 UTOPIA Slave Receive Timing(A)

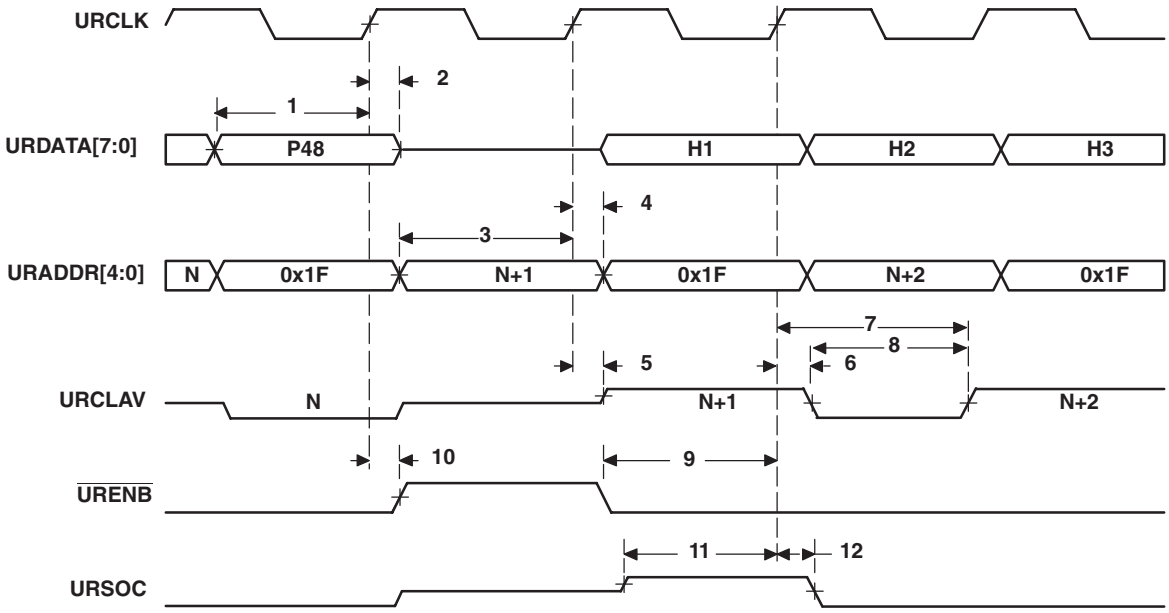

(A) The UTOPIA slave module has signals that are middle-level signals indicating a high-impedance state (i.e., the URCLAV and URSOC signals).

7.20 Serial RapidIO (SRIO) Port

The SRIO port on the TMS320C6457 device is a high-performance, low pin-count interconnect aimed for embedded markets. The use of the RapidIO interconnect in a baseband board design can create a homogeneous interconnect environment, providing even more connectivity and control among the components. RapidIO is based on the memory and device addressing concepts of processor buses where the transaction processing is managed completely by hardware. This enables the RapidIO interconnect to lower the system cost by providing lower latency, reduced overhead of packet data processing, and higher system bandwidth, all of which are key for wireless interfaces. The RapidIO interconnect offers very low pin-count interfaces with scalable system bandwidth based on 10-Gigabit per second (Gbps) bidirectional links.

The PHY part of the RIO consists of the physical layer and includes the input and output buffers (each serial link consists of a differential pair), the 8-bit/10-bit encoder/decoder, the PLL clock recovery, and the parallel-to-serial/serial-to-parallel converters.

The C6457 device supports four 1× or one 4× Serial RapidIO links. The RapidIO interface should be designed to operate at a data rate of 3.125 Gbps per differential pair. This equals 12.5 raw GBaud/s for the 4× RapidIO port, or approximately 9 Gbps data throughput rate.

7.20.1 Serial RapidIO Device-Specific Information

The approach to specifying interface timing for the SRIO Port is different than on other interfaces such as EMIFA, HPI, and McBSP. For these other interfaces, the device timing was specified in terms of data manual specifications and I/O buffer information specification (IBIS) models.

PRODUCT PREVIEW

For the C6457 SRIO Port, Texas Instruments (TI) provides a printed circuit board (PCB) solution showing two DSPs connected via a 4× SRIO link directly to the user. TI has performed the simulation and system characterization to ensure all SRIO interface timings in this solution are met. The complete SRIO system solution is documented in the *TMS320TCI6484 and TMS320C6457 SerDes Implementation Guidelines* application report (literature number SPRAAY1).

Note—TI supports ***only*** designs that follow the board design guidelines outlined in the application report.

The Serial RapidIO peripheral is a master peripheral in the C6457 DSP. It conforms to the *RapidIO™ Interconnect Specification, Part VI: Physical Layer 1×/4× LP-Serial Specification*, Revision 1.3.

7.20.2 Serial RapidIO Peripheral Register Description(s)

Table 7-111 RapidIO Control Registers (Part 1 of 12)

Hex Address Range	Acronym	Register Name
02D0 0000	RIO_PID	Peripheral Identification Register
02D0 0004	RIO_PCR	Peripheral Control Register
02D0 0008 - 02D0 001C	-	Reserved
02D0 0020	RIO_PER_SET_CNTL0	Peripheral Settings Control Register 0
02D0 0024	RIO_PER_SET_CNTL1	Peripheral Settings Control Register 1
02D0 0028 - 02D0 002C	-	Reserved
02D0 0030	RIO_GBL_EN	Peripheral Global Enable Register
02D0 0034	RIO_GBL_EN_STAT	Peripheral Global Enable Status
02D0 0038	RIO_BLK0_EN	Block Enable 0
02D0 003C	RIO_BLK0_EN_STAT	Block Enable Status 0
02D0 0040	RIO_BLK1_EN	Block Enable 1
02D0 0044	RIO_BLK1_EN_STAT	Block Enable Status 1
02D0 0048	BLK2_EN	Block Enable 2
02D0 004C	BLK2_EN_STAT	Block Enable Status 2
02D0 0050	BLK3_EN	Block Enable 3
02D0 0054	BLK3_EN_STAT	Block Enable Status 3
02D0 0058	BLK4_EN	Block Enable 4
02D0 005C	BLK4_EN_STAT	Block Enable Status 4
02D0 0060	BLK5_EN	Block Enable 5
02D0 0064	BLK5_EN_STAT	Block Enable Status 5
02D0 0068	BLK6_EN	Block Enable 6
02D0 006C	BLK6_EN_STAT	Block Enable Status 6
02D0 0070	BLK7_EN	Block Enable 7
02D0 0074	BLK7_EN_STAT	Block Enable Status 7
02D0 0078	BLK8_EN	Block Enable 8
02D0 007C	BLK8_EN_STAT	Block Enable Status 8
02D0 0080	DEVICEID_REG1	RapidIO DEVICEID1 Register
02D0 0084	DEVICEID_REG2	RapidIO DEVICEID2 Register
02D0 0088	DEVICEID_REG3	RapidIO DEVICEID3 Register
02D0 008C	DEVICEID_REG4	RapidIO DEVICEID4 Register
02D0 0090	PF_16B_CNTL0	Packet Forwarding Register 0 for 16-bit Device IDs
02D0 0094	PF_8B_CNTL0	Packet Forwarding Register 0 for 8-bit Device IDs

PRODUCT PREVIEW

Table 7-111 RapidIO Control Registers (Part 2 of 12)

Hex Address Range	Acronym	Register Name
02D0 0098	PF_16B_CNTL1	Packet Forwarding Register 1 for 16-bit Device IDs
02D0 009C	PF_8B_CNTL1	Packet Forwarding Register 1 for 8-bit Device IDs
02D0 00A0	PF_16B_CNTL2	Packet Forwarding Register 2 for 16-bit Device IDs
02D0 00A4	PF_8B_CNTL2	Packet Forwarding Register 2 for 8-bit Device IDs
02D0 00A8	PF_16B_CNTL3	Packet Forwarding Register 3 for 16-bit Device IDs
02D0 00AC	PF_8B_CNTL3	Packet Forwarding Register 3 for 8-bit Device IDs
02D0 00B0 - 02D0 00FC	-	Reserved
02D0 0100	SERDES_CFGRX0_CNTL	SerDes Receive Channel Configuration Register 0
02D0 0104	SERDES_CFGRX1_CNTL	SerDes Receive Channel Configuration Register 1
02D0 0108	SERDES_CFGRX2_CNTL	SerDes Receive Channel Configuration Register 2
02D0 010C	SERDES_CFGRX3_CNTL	SerDes Receive Channel Configuration Register 3
02D0 0110	SERDES_CFGTX0_CNTL	SerDes Transmit Channel Configuration Register 0
02D0 0114	SERDES_CFGTX1_CNTL	SerDes Transmit Channel Configuration Register 1
02D0 0118	SERDES_CFGTX2_CNTL	SerDes Transmit Channel Configuration Register 2
02D0 011C	SERDES_CFGTX3_CNTL	SerDes Transmit Channel Configuration Register 3
02D0 0120	SERDES_CFG0_CNTL	SerDes Macro Configuration Register 0
02D0 0124	SERDES_CFG1_CNTL	SerDes Macro Configuration Register 1
02D0 0128	SERDES_CFG2_CNTL	SerDes Macro Configuration Register 2
02D0 012C	SERDES_CFG3_CNTL	SerDes Macro Configuration Register 3
02D0 0130 - 02D0 01FC	-	Reserved
02D0 0200	DOORBELL0_ICSR	DOORBELL Interrupt Condition Status Register 0
02D0 0204	-	Reserved
02D0 0208	DOORBELL0_ICCR	DOORBELL Interrupt Condition Clear Register 0
02D0 020C	-	Reserved
02D0 0210	DOORBELL1_ICSR	DOORBELL Interrupt Condition Status Register 1
02D0 0214	-	Reserved
02D0 0218	DOORBELL1_ICCR	DOORBELL Interrupt Condition Clear Register 1
02D0 021C	-	Reserved
02D0 0220	DOORBELL2_ICSR	DOORBELL Interrupt Condition Status Register 2
02D0 0224	-	Reserved
02D0 0228	DOORBELL2_ICCR	DOORBELL Interrupt Condition Clear Register 2
02D0 022C	-	Reserved
02D0 0230	DOORBELL3_ICSR	DOORBELL Interrupt Condition Status Register 3
02D0 0234	-	Reserved
02D0 0238	DOORBELL3_ICCR	DOORBELL Interrupt Condition Clear Register 3
02D0 023C	-	Reserved
02D0 0240	RX_CPPI_ICSR	RX CPPI Interrupt Condition Status Register
02D0 0244	-	Reserved
02D0 0248	RX_CPPI_ICCR	RX CPPI Interrupt Condition Clear Register
02D0 024c	-	Reserved
02D0 0250	TX_CPPI_ICSR	TX CPPI Interrupt Condition Status Register
02D0 0254	-	Reserved
02D0 0258	TX_CPPI_ICCR	TX CPPI Interrupt Condition Clear Register
02D0 025C	-	Reserved

PRODUCT PREVIEW

Table 7-111 RapidIO Control Registers (Part 3 of 12)

Hex Address Range	Acronym	Register Name
02D0 0260	LSU_ICSR	LSU Interrupt Condition Status Register
02D0 0264	-	Reserved
02D0 0268	LSU_ICCR	LSU Interrupt Condition Clear Register
02D0 026C	-	Reserved
02D0 0270	ERR_RST_EVNT_ICSR	Error, Reset, and Special Event Interrupt Condition Status Register
02D0 0274	-	Reserved
02D0 0278	ERR_RST_EVNT_ICCR	Error, Reset, and Special Event Interrupt Condition Clear Register
02D0 027C	-	Reserved
02D0 0280	DOORBELL0_ICRR	DOORBELL0 Interrupt Condition Routing Register
02D0 0284	DOORBELL0_ICRR2	DOORBELL 0 Interrupt Condition Routing Register 2
02D0 0288 - 02D0 028C	-	Reserved
02D0 0290	DOORBELL1_ICRR	DOORBELL1 Interrupt Condition Routing Register
02D0 0294	DOORBELL1_ICRR2	DOORBELL 1 Interrupt Condition Routing Register 2
02D0 0298 - 02D0 029C	-	Reserved
02D0 02A0	DOORBELL2_ICRR	DOORBELL2 Interrupt Condition Routing Register
02D0 02A4	DOORBELL2_ICRR2	DOORBELL 2 Interrupt Condition Routing Register 2
02D0 02A8 - 02D0 02AC	-	Reserved
02D0 02B0	DOORBELL3_ICRR	DOORBELL3 Interrupt Condition Routing Register
02D0 02B4	DOORBELL3_ICRR2	DOORBELL 3 Interrupt Condition Routing Register 2
02D0 02B8 - 02D0 02BC	-	Reserved
02D0 02C0	RX_CPPI_ICRR	Receive CPPI Interrupt Condition Routing Register
02D0 02C4	RX_CPPI_ICRR2	Receive CPPI Interrupt Condition Routing Register 2
02D0 02C8 - 02D0 02CC	-	Reserved
02D0 02D0	TX_CPPI_ICRR	Transmit CPPI Interrupt Condition Routing Register
02D0 02D4	TX_CPPI_ICRR2	Transmit CPPI Interrupt Condition Routing Register 2
02D0 02D8 - 02D0 02DC	-	Reserved
02D0 02E0	LSU_ICRR0	LSU Interrupt Condition Routing Register 0
02D0 02E4	LSU_ICRR1	LSU Interrupt Condition Routing Register 1
02D0 02E8	LSU_ICRR2	LSU Interrupt Condition Routing Register 2
02D0 02EC	LSU_ICRR3	LSU Interrupt Condition Routing Register 3
02D0 02F0	ERR_RST_EVNT_ICRR	Error, Reset, and Special Event Interrupt Condition Routing Register
02D0 02F4	ERR_RST_EVNT_ICRR2	Error, Reset, and Special Event Interrupt Condition Routing Register 2
02D0 02F8	ERR_RST_EVNT_ICRR3	Error, Reset, and Special Event Interrupt Condition Routing Register 3
02D0 02FC	-	Reserved
02D0 0300	INTDST0_DECODE	INTDST Interrupt Status Decode Register 0
02D0 0304	INTDST1_DECODE	INTDST Interrupt Status Decode Register 1
02D0 0308	INTDST2_DECODE	INTDST Interrupt Status Decode Register 2
02D0 030C	INTDST3_DECODE	INTDST Interrupt Status Decode Register 3
02D0 0310	INTDST4_DECODE	INTDST Interrupt Status Decode Register 4
02D0 0314	INTDST5_DECODE	INTDST Interrupt Status Decode Register 5
02D0 0318	INTDST6_DECODE	INTDST Interrupt Status Decode Register 6
02D0 031C	INTDST7_DECODE	INTDST Interrupt Status Decode Register 7
02D0 0320	INTDST0_RATE_CNTL	INTDST Interrupt Rate Control Register 0
02D0 0324	INTDST1_RATE_CNTL	INTDST Interrupt Rate Control Register 1

PRODUCT PREVIEW

PRODUCT PREVIEW

Table 7-111 RapidIO Control Registers (Part 4 of 12)

Hex Address Range	Acronym	Register Name
02D0 0328	INTDST2_RATE_CNTL	INTDST Interrupt Rate Control Register 2
02D0 032C	INTDST3_RATE_CNTL	INTDST Interrupt Rate Control Register 3
02D0 0330	INTDST4_RATE_CNTL	INTDST Interrupt Rate Control Register 4
02D0 0334	INTDST5_RATE_CNTL	INTDST Interrupt Rate Control Register 5
02D0 0338	INTDST6_RATE_CNTL	INTDST Interrupt Rate Control Register 6
02D0 033C	INTDST7_RATE_CNTL	INTDST Interrupt Rate Control Register 7
02D0 0340 - 02D0 03FC	-	Reserved
02D0 0400	LSU1_REG0	LSU1 Control Register 0
02D0 0404	LSU1_REG1	LSU1 Control Register 1
02D0 0408	LSU1_REG2	LSU1 Control Register 2
02D0 040C	LSU1_REG3	LSU1 Control Register 3
02D0 0410	LSU1_REG4	LSU1 Control Register 4
02D0 0414	LSU1_REG5	LSU1 Control Register 5
02D0 0418	LSU1_REG6	LSU1 Control Register 6
02D0 041C	LSU1_FLOW_MASKS1	LSU1 Congestion Control Flow Mask Register
02D0 0420	LSU2_REG0	LSU2 Control Register 0
02D0 0424	LSU2_REG1	LSU2 Control Register 1
02D0 0428	LSU2_REG2	LSU2 Control Register 2
02D0 042C	LSU2_REG3	LSU2 Control Register 3
02D0 0430	LSU2_REG4	LSU2 Control Register 4
02D0 0434	LSU2_REG5	LSU2 Control Register 5
02D0 0438	LSU2_REG6	LSU2 Control Register 6
02D0 043C	LSU2_FLOW_MASKS2	LSU2 Congestion Control Flow Mask Register
02D0 0440	LSU3_REG0	LSU3 Control Register 0
02D0 0444	LSU3_REG1	LSU3 Control Register 1
02D0 0448	LSU3_REG2	LSU3 Control Register 2
02D0 044C	LSU3_REG3	LSU3 Control Register 3
02D0 0450	LSU3_REG4	LSU3 Control Register 4
02D0 0454	LSU3_REG5	LSU3 Control Register 5
02D0 0458	LSU3_REG6	LSU3 Control Register 6
02D0 045C	LSU3_FLOW_MASKS3	LSU3 Congestion Control Flow Mask Register
02D0 0460	LSU4_REG0	LSU4 Control Register 0
02D0 0464	LSU4_REG1	LSU4 Control Register 1
02D0 0468	LSU4_REG2	LSU4 Control Register 2
02D0 046C	LSU4_REG3	LSU4 Control Register 3
02D0 0470	LSU4_REG4	LSU4 Control Register 4
02D0 0474	LSU4_REG5	LSU4 Control Register 5
02D0 0478	LSU4_REG6	LSU4 Control Register 6
02D0 047C	LSU4_FLOW_MASKS4	LSU4 Congestion Control Flow Mask Register
02D0 0480 - 02D0 04FC	-	Reserved
02D0 0500	QUEUE0_TXDMA_HDP	Queue Transmit DMA Head Descriptor Pointer Register 0
02D0 0504	QUEUE1_TXDMA_HDP	Queue Transmit DMA Head Descriptor Pointer Register 1
02D0 0508	QUEUE2_TXDMA_HDP	Queue Transmit DMA Head Descriptor Pointer Register 2
02D0 050C	QUEUE3_TXDMA_HDP	Queue Transmit DMA Head Descriptor Pointer Register 3

Table 7-111 RapidIO Control Registers (Part 5 of 12)

Hex Address Range	Acronym	Register Name
02D0 0510	QUEUE4_TXDMA_HDP	Queue Transmit DMA Head Descriptor Pointer Register 4
02D0 0514	QUEUE5_TXDMA_HDP	Queue Transmit DMA Head Descriptor Pointer Register 5
02D0 0518	QUEUE6_TXDMA_HDP	Queue Transmit DMA Head Descriptor Pointer Register 6
02D0 051C	QUEUE7_TXDMA_HDP	Queue Transmit DMA Head Descriptor Pointer Register 7
02D0 0520	QUEUE8_TXDMA_HDP	Queue Transmit DMA Head Descriptor Pointer Register 8
02D0 0524	QUEUE9_TXDMA_HDP	Queue Transmit DMA Head Descriptor Pointer Register 9
02D0 0528	QUEUE10_TXDMA_HDP	Queue Transmit DMA Head Descriptor Pointer Register 10
02D0 052C	QUEUE11_TXDMA_HDP	Queue Transmit DMA Head Descriptor Pointer Register 11
02D0 0530	QUEUE12_TXDMA_HDP	Queue Transmit DMA Head Descriptor Pointer Register 12
02D0 0534	QUEUE13_TXDMA_HDP	Queue Transmit DMA Head Descriptor Pointer Register 13
02D0 0538	QUEUE14_TXDMA_HDP	Queue Transmit DMA Head Descriptor Pointer Register 14
02D0 053C	QUEUE15_TXDMA_HDP	Queue Transmit DMA Head Descriptor Pointer Register 15
02D0 0540 - 02D0 057C	-	Reserved
02D0 0580	QUEUE0_TXDMA_CP	Queue Transmit DMA Completion Pointer Register 0
02D0 0584	QUEUE1_TXDMA_CP	Queue Transmit DMA Completion Pointer Register 1
02D0 0588	QUEUE2_TXDMA_CP	Queue Transmit DMA Completion Pointer Register 2
02D0 058C	QUEUE3_TXDMA_CP	Queue Transmit DMA Completion Pointer Register 3
02D0 0590	QUEUE4_TXDMA_CP	Queue Transmit DMA Completion Pointer Register 4
02D0 0594	QUEUE5_TXDMA_CP	Queue Transmit DMA Completion Pointer Register 5
02D0 0598	QUEUE6_TXDMA_CP	Queue Transmit DMA Completion Pointer Register 6
02D0 059C	QUEUE7_TXDMA_CP	Queue Transmit DMA Completion Pointer Register 7
02D0 05A0	QUEUE8_TXDMA_CP	Queue Transmit DMA Completion Pointer Register 8
02D0 05A4	QUEUE9_TXDMA_CP	Queue Transmit DMA Completion Pointer Register 9
02D0 05A8	QUEUE10_TXDMA_CP	Queue Transmit DMA Completion Pointer Register 10
02D0 05AC	QUEUE11_TXDMA_CP	Queue Transmit DMA Completion Pointer Register 11
02D0 05B0	QUEUE12_TXDMA_CP	Queue Transmit DMA Completion Pointer Register 12
02D0 05B4	QUEUE13_TXDMA_CP	Queue Transmit DMA Completion Pointer Register 13
02D0 05B8	QUEUE14_TXDMA_CP	Queue Transmit DMA Completion Pointer Register 14
02D0 05BC	QUEUE15_TXDMA_CP	Queue Transmit DMA Completion Pointer Register 15
02D0 05D0 - 02D0 05FC	-	Reserved
02D0 0600	QUEUE0_RXDMA_HDP	Queue Receive DMA Head Descriptor Pointer Register 0
02D0 0604	QUEUE1_RXDMA_HDP	Queue Receive DMA Head Descriptor Pointer Register 1
02D0 0608	QUEUE2_RXDMA_HDP	Queue Receive DMA Head Descriptor Pointer Register 2
02D0 060C	QUEUE3_RXDMA_HDP	Queue Receive DMA Head Descriptor Pointer Register 3
02D0 0610	QUEUE4_RXDMA_HDP	Queue Receive DMA Head Descriptor Pointer Register 4
02D0 0614	QUEUE5_RXDMA_HDP	Queue Receive DMA Head Descriptor Pointer Register 5
02D0 0618	QUEUE6_RXDMA_HDP	Queue Receive DMA Head Descriptor Pointer Register 6
02D0 061C	QUEUE7_RXDMA_HDP	Queue Receive DMA Head Descriptor Pointer Register 7
02D0 0620	QUEUE8_RXDMA_HDP	Queue Receive DMA Head Descriptor Pointer Register 8
02D0 0624	QUEUE9_RXDMA_HDP	Queue Receive DMA Head Descriptor Pointer Register 9
02D0 0628	QUEUE10_RXDMA_HDP	Queue Receive DMA Head Descriptor Pointer Register 10
02D0 062C	QUEUE11_RXDMA_HDP	Queue Receive DMA Head Descriptor Pointer Register 11
02D0 0630	QUEUE12_RXDMA_HDP	Queue Receive DMA Head Descriptor Pointer Register 12
02D0 0634	QUEUE13_RXDMA_HDP	Queue Receive DMA Head Descriptor Pointer Register 13

PRODUCT PREVIEW

Table 7-111 RapidIO Control Registers (Part 6 of 12)

Hex Address Range	Acronym	Register Name
02D0 0638	QUEUE14_RXDMA_HDP	Queue Receive DMA Head Descriptor Pointer Register 14
02D0 063C	QUEUE15_RXDMA_HDP	Queue Receive DMA Head Descriptor Pointer Register 15
02D0 0640 - 02D0 067C	-	Reserved
02D0 0680	QUEUE0_RXDMA_CP	Queue Receive DMA Completion Pointer Register 0
02D0 0684	QUEUE1_RXDMA_CP	Queue Receive DMA Completion Pointer Register 1
02D0 0688	QUEUE2_RXDMA_CP	Queue Receive DMA Completion Pointer Register 2
02D0 068C	QUEUE3_RXDMA_CP	Queue Receive DMA Completion Pointer Register 3
02D0 0690	QUEUE4_RXDMA_CP	Queue Receive DMA Completion Pointer Register 4
02D0 0694	QUEUE5_RXDMA_CP	Queue Receive DMA Completion Pointer Register 5
02D0 0698	QUEUE6_RXDMA_CP	Queue Receive DMA Completion Pointer Register 6
02D0 069C	QUEUE7_RXDMA_CP	Queue Receive DMA Completion Pointer Register 7
02D0 06A0	QUEUE8_RXDMA_CP	Queue Receive DMA Completion Pointer Register 8
02D0 06A4	QUEUE9_RXDMA_CP	Queue Receive DMA Completion Pointer Register 9
02D0 06A8	QUEUE10_RXDMA_CP	Queue Receive DMA Completion Pointer Register 10
02D0 06AC	QUEUE11_RXDMA_CP	Queue Receive DMA Completion Pointer Register 11
02D0 06B0	QUEUE12_RXDMA_CP	Queue Receive DMA Completion Pointer Register 12
02D0 06B4	QUEUE13_RXDMA_CP	Queue Receive DMA Completion Pointer Register 13
02D0 06B8	QUEUE14_RXDMA_CP	Queue Receive DMA Completion Pointer Register 14
02D0 06BC	QUEUE15_RXDMA_CP	Queue Receive DMA Completion Pointer Register 15
02D0 06C0 - 02D0 006FC	-	Reserved
02D0 0700	TX_QUEUE_TEAR_DOWN	Transmit Queue Teardown Register
02D0 0704	TX_CPPI_FLOW_MASKS0	Transmit CPPI Supported Flow Mask Register 0
02D0 0708	TX_CPPI_FLOW_MASKS1	Transmit CPPI Supported Flow Mask Register 1
02D0 070C	TX_CPPI_FLOW_MASKS2	Transmit CPPI Supported Flow Mask Register 2
02D0 0710	TX_CPPI_FLOW_MASKS3	Transmit CPPI Supported Flow Mask Register 3
02D0 0714	TX_CPPI_FLOW_MASKS4	Transmit CPPI Supported Flow Mask Register 4
02D0 0718	TX_CPPI_FLOW_MASKS5	Transmit CPPI Supported Flow Mask Register 5
02D0 071C	TX_CPPI_FLOW_MASKS6	Transmit CPPI Supported Flow Mask Register 6
02D0 0720	TX_CPPI_FLOW_MASKS7	Transmit CPPI Supported Flow Mask Register 7
02D0 0724 - 02D0 073C	-	Reserved
02D0 0740	RX_QUEUE_TEAR_DOWN	Receive Queue Teardown Register
02D0 0744	RX_CPPI_CNTL	Receive CPPI Control Register
02D0 0748 - 02D0 07DC	-	Reserved
02D0 07E0	TX_QUEUE_CNTL0	Transmit CPPI Weighted Round Robin Control Register 0
02D0 07E4	TX_QUEUE_CNTL1	Transmit CPPI Weighted Round Robin Control Register 1
02D0 07E8	TX_QUEUE_CNTL2	Transmit CPPI Weighted Round Robin Control Register 2
02D0 07EC	TX_QUEUE_CNTL3	Transmit CPPI Weighted Round Robin Control Register 3
02D0 07F0 - 02D0 07FC	-	Reserved
02D0 0800	RXU_MAP_L0	Mailbox-to-Queue Mapping Register L0
02D0 0804	RXU_MAP_H0	Mailbox-to-Queue Mapping Register H0
02D0 0808	RXU_MAP_L1	Mailbox-to-Queue Mapping Register L1
02D0 080C	RXU_MAP_H1	Mailbox-to-Queue Mapping Register H1
02D0 0810	RXU_MAP_L2	Mailbox-to-Queue Mapping Register L2
02D0 0814	RXU_MAP_H2	Mailbox-to-Queue Mapping Register H2

PRODUCT PREVIEW

Table 7-111 RapidIO Control Registers (Part 7 of 12)

Hex Address Range	Acronym	Register Name
02D0 0818	RXU_MAP_L3	Mailbox-to-Queue Mapping Register L3
02D0 081C	RXU_MAP_H3	Mailbox-to-Queue Mapping Register H3
02D0 0820	RXU_MAP_L4	Mailbox-to-Queue Mapping Register L4
02D0 0824	RXU_MAP_H4	Mailbox-to-Queue Mapping Register H4
02D0 0828	RXU_MAP_L5	Mailbox-to-Queue Mapping Register L5
02D0 082C	RXU_MAP_H5	Mailbox-to-Queue Mapping Register H5
02D0 0830	RXU_MAP_L6	Mailbox-to-Queue Mapping Register L6
02D0 0834	RXU_MAP_H6	Mailbox-to-Queue Mapping Register H6
02D0 0838	RXU_MAP_L7	Mailbox-to-Queue Mapping Register L7
02D0 083C	RXU_MAP_H7	Mailbox-to-Queue Mapping Register H7
02D0 0840	RXU_MAP_L8	Mailbox-to-Queue Mapping Register L8
02D0 0844	RXU_MAP_H8	Mailbox-to-Queue Mapping Register H8
02D0 0848	RXU_MAP_L9	Mailbox-to-Queue Mapping Register L9
02D0 084C	RXU_MAP_H9	Mailbox-to-Queue Mapping Register H9
02D0 0850	RXU_MAP_L10	Mailbox-to-Queue Mapping Register L10
02D0 0854	RXU_MAP_H10	Mailbox-to-Queue Mapping Register H10
02D0 0858	RXU_MAP_L11	Mailbox-to-Queue Mapping Register L11
02D0 085C	RXU_MAP_H11	Mailbox-to-Queue Mapping Register H11
02D0 0860	RXU_MAP_L12	Mailbox-to-Queue Mapping Register L12
02D0 0864	RXU_MAP_H12	Mailbox-to-Queue Mapping Register H12
02D0 0868	RXU_MAP_L13	Mailbox-to-Queue Mapping Register L13
02D0 086C	RXU_MAP_H13	Mailbox-to-Queue Mapping Register H13
02D0 0870	RXU_MAP_L14	Mailbox-to-Queue Mapping Register L14
02D0 0874	RXU_MAP_H14	Mailbox-to-Queue Mapping Register H14
02D0 0878	RXU_MAP_L15	Mailbox-to-Queue Mapping Register L15
02D0 087C	RXU_MAP_H15	Mailbox-to-Queue Mapping Register H15
02D0 0880	RXU_MAP_L16	Mailbox-to-Queue Mapping Register L16
02D0 0884	RXU_MAP_H16	Mailbox-to-Queue Mapping Register H16
02D0 0888	RXU_MAP_L17	Mailbox-to-Queue Mapping Register L17
02D0 088C	RXU_MAP_H17	Mailbox-to-Queue Mapping Register H17
02D0 0890	RXU_MAP_L18	Mailbox-to-Queue Mapping Register L18
02D0 0894	RXU_MAP_H18	Mailbox-to-Queue Mapping Register H18
02D0 0898	RXU_MAP_L19	Mailbox-to-Queue Mapping Register L19
02D0 089C	RXU_MAP_H19	Mailbox-to-Queue Mapping Register H19
02D0 08A0	RXU_MAP_L20	Mailbox-to-Queue Mapping Register L20
02D0 08A4	RXU_MAP_H20	Mailbox-to-Queue Mapping Register H20
02D0 08A8	RXU_MAP_L21	Mailbox-to-Queue Mapping Register L21
02D0 08AC	RXU_MAP_H21	Mailbox-to-Queue Mapping Register H21
02D0 08B0	RXU_MAP_L22	Mailbox-to-Queue Mapping Register L22
02D0 08B4	RXU_MAP_H22	Mailbox-to-Queue Mapping Register H22
02D0 08B8	RXU_MAP_L23	Mailbox-to-Queue Mapping Register L23
02D0 08BC	RXU_MAP_H23	Mailbox-to-Queue Mapping Register H23
02D0 08C0	RXU_MAP_L24	Mailbox-to-Queue Mapping Register L24
02D0 08C4	RXU_MAP_H24	Mailbox-to-Queue Mapping Register H24

PRODUCT PREVIEW

PRODUCT PREVIEW

Table 7-111 RapidIO Control Registers (Part 8 of 12)

Hex Address Range	Acronym	Register Name
02D0 08C8	RXU_MAP_L25	Mailbox-to-Queue Mapping Register L25
02D0 08CC	RXU_MAP_H25	Mailbox-to-Queue Mapping Register H25
02D0 08D0	RXU_MAP_L26	Mailbox-to-Queue Mapping Register L26
02D0 08D4	RXU_MAP_H26	Mailbox-to-Queue Mapping Register H26
02D0 08D8	RXU_MAP_L27	Mailbox-to-Queue Mapping Register L27
02D0 08DC	RXU_MAP_H27	Mailbox-to-Queue Mapping Register H27
02D0 08E0	RXU_MAP_L28	Mailbox-to-Queue Mapping Register L28
02D0 08E4	RXU_MAP_H28	Mailbox-to-Queue Mapping Register H28
02D0 08E8	RXU_MAP_L29	Mailbox-to-Queue Mapping Register L29
02D0 08EC	RXU_MAP_H29	Mailbox-to-Queue Mapping Register H29
02D0 08F0	RXU_MAP_L30	Mailbox-to-Queue Mapping Register L30
02D0 08F4	RXU_MAP_H30	Mailbox-to-Queue Mapping Register H30
02D0 08F8	RXU_MAP_L31	Mailbox-to-Queue Mapping Register L31
02D0 08FC	RXU_MAP_H31	Mailbox-to-Queue Mapping Register H31
02D0 0900	FLOW_CNTL0	Flow Control Table Entry Register 0
02D0 0904	FLOW_CNTL1	Flow Control Table Entry Register 1
02D0 0908	FLOW_CNTL2	Flow Control Table Entry Register 2
02D0 090C	FLOW_CNTL3	Flow Control Table Entry Register 3
02D0 0910	FLOW_CNTL4	Flow Control Table Entry Register 4
02D0 0914	FLOW_CNTL5	Flow Control Table Entry Register 5
02D0 0918	FLOW_CNTL6	Flow Control Table Entry Register 6
02D0 091C	FLOW_CNTL7	Flow Control Table Entry Register 7
02D0 0920	FLOW_CNTL8	Flow Control Table Entry Register 8
02D0 0924	FLOW_CNTL9	Flow Control Table Entry Register 9
02D0 0928	FLOW_CNTL10	Flow Control Table Entry Register 10
02D0 092C	FLOW_CNTL11	Flow Control Table Entry Register 11
02D0 0930	FLOW_CNTL12	Flow Control Table Entry Register 12
02D0 0934	FLOW_CNTL13	Flow Control Table Entry Register 13
02D0 0938	FLOW_CNTL14	Flow Control Table Entry Register 14
02D0 093C	FLOW_CNTL15	Flow Control Table Entry Register 15
02D0 0940 - 02D0 09FC	-	Reserved
RapidIO Peripheral-Specific Registers		
02D0 1000	DEV_ID	Device Identity CAR
02D0 1004	DEV_INFO	Device Information CAR
02D0 1008	ASBLY_ID	Assembly Identity CAR
02D0 100C	ASBLY_INFO	Assembly Information CAR
02D0 1010	PE_FEAT	Processing Element Features CAR
02D0 1014	-	Reserved
02D0 1018	SRC_OP	Source Operations CAR
02D0 101C	DEST_OP	Destination Operations CAR
02D0 1020 - 02D0 1048	-	Reserved
02D0 104C	PE_LL_CTL	Processing Element Logical Layer Control CSR
02D0 1050 - 02D0 1054	-	Reserved
02D0 1058	LCL_CFG_HBAR	Local Configuration Space Base Address 0 CSR

Table 7-111 RapidIO Control Registers (Part 9 of 12)

Hex Address Range	Acronym	Register Name
02D0 105C	LCL_CFG_BAR	Local Configuration Space Base Address 1 CSR
02D0 1060	BASE_ID	Base Device ID CSR
02D0 1064	-	Reserved
02D0 1068	HOST_BASE_ID_LOCK	Host Base Device ID Lock CSR
02D0 106C	COMP_TAG	Component Tag CSR
02D0 1070 - 02D0 10FC	-	Reserved
RapidIO Extended Features -LP Serial Registers		
02D0 1100	SP_MB_HEAD	1×/4× LP Serial Port Maintenance Block Header
02D0 1104 - 02D0 1118	-	Reserved
02D0 1120	SP_LT_CTL	Port Link Time-Out Control CSR
02D0 1124	SP_RT_CTL	Port Response Time-Out Control CSR
02D0 1128 - 02D0 1138	-	Reserved
02D0 113C	SP_GEN_CTL	Port General Control CSR
02D0 1140	SP0_LM_REQ	Port 0 Link Maintenance Request CSR
02D0 1144	SP0_LM_RESP	Port 0 Link Maintenance Response CSR
02D0 1148	SP0_ACKID_STAT	Port 0 Local Acknowledge ID Status CSR
02D0 114C - 02D0 1154	-	Reserved
02D0 1158	SP0_ERR_STAT	Port 0 Error and Status CSR
02D0 115C	SP0_CTL	Port 0 Control CSR
02D0 1160	SP1_LM_REQ	Port 1 Link Maintenance Request CSR
02D0 1164	SP1_LM_RESP	Port 1 Link Maintenance Response CSR
02D0 1168	SP1_ACKID_STAT	Port 1 Local Acknowledge ID Status CSR
02D0 116C - 02D0 1174	-	Reserved
02D0 1178	SP1_ERR_STAT	Port 1 Error and Status CSR
02D0 117C	SP1_CTL	Port 1 Control CSR
02D0 1180	SP2_LM_REQ	Port 2 Link Maintenance Request CSR
02D0 1184	SP2_LM_RESP	Port 2 Link Maintenance Response CSR
02D0 1188	SP2_ACKID_STAT	Port 2 Local Acknowledge ID Status CSR
02D0 118C - 02D0 1194	-	Reserved
02D0 1198	SP2_ERR_STAT	Port 2 Error and Status CSR
02D0 119C	SP2_CTL	Port 2 Control CSR
02D0 11A0	SP3_LM_REQ	Port 3 Link Maintenance Request CSR
02D0 11A4	SP3_LM_RESP	Port 3 Link Maintenance Response CSR
02D0 11A8	SP3_ACKID_STAT	Port 3 Local Acknowledge ID Status CSR
02D0 11AC - 02D0 11B4	-	Reserved
02D0 11B8	SP3_ERR_STAT	Port 3 Error and Status CSR
02D0 11BC	SP3_CTL	Port 3 Control CSR
02D0 11C0 -02D0 1FFC	-	Reserved
RapidIO Extended Feature -Error Management Registers		
02D0 2000	ERR_RPT_BH	Error Reporting Block Header
02D0 2004	-	Reserved
02D0 2008	ERR_DET	Logical/Transport Layer Error Detect CSR
02D0 200C	ERR_EN	Logical/Transport Layer Error Enable CSR
02D0 2010	H_ADDR_CAPT	Logical/Transport Layer High Address Capture CSR

PRODUCT PREVIEW

Table 7-111 RapidIO Control Registers (Part 10 of 12)

Hex Address Range	Acronym	Register Name
02D0 2014	ADDR_CAPT	Logical/Transport Layer Address Capture CSR
02D0 2018	ID_CAPT	Logical/Transport Layer Device ID Capture CSR
02D0 201C	CTRL_CAPT	Logical/Transport Layer Control Capture CSR
02D0 2020 - 02D0 2024	-	Reserved
02D0 2028	PW_TGT_ID	Port-Write Target Device ID CSR
02D0 202C - 02D0 203C	-	Reserved
02D0 2040	SP0_ERR_DET	Port 0 Error Detect CSR
02D0 2044	SP0_RATE_EN	Port 0 Error Enable CSR
02D0 2048	SP0_ERR_ATTR_CAPT_DBG0	Port 0 Attributes Error Capture CSR 0
02D0 204C	SP0_ERR_CAPT_DBG1	Port 0 Packet/Control Symbol Error Capture CSR 1
02D0 2050	SP0_ERR_CAPT_DBG2	Port 0 Packet/Control Symbol Error Capture CSR 2
02D0 2054	SP0_ERR_CAPT_DBG3	Port 0 Packet/Control Symbol Error Capture CSR 3
02D0 2058	SP0_ERR_CAPT_DBG4	Port 0 Packet/Control Symbol Error Capture CSR 4
02D0 205C - 02D0 2064	-	Reserved
02D0 2068	SP0_ERR_RATE	Port 0 Error Rate CSR 0
02D0 206C	SP0_ERR_THRESH	Port 0 Error Rate Threshold CSR
02D0 2070 - 02D0 207C	-	Reserved
02D0 2080	SP1_ERR_DET	Port 1 Error Detect CSR
02D0 2084	SP1_RATE_EN	Port 1 Error Enable CSR
02D0 2088	SP1_ERR_ATTR_CAPT_DBG0	Port 1 Attributes Error Capture CSR 0
02D0 208C	SP1_ERR_CAPT_DBG1	Port 1 Packet/Control Symbol Error Capture CSR 1
02D0 2090	SP1_ERR_CAPT_DBG2	Port 1 Packet/Control Symbol Error Capture CSR 2
02D0 2094	SP1_ERR_CAPT_DBG3	Port 1 Packet/Control Symbol Error Capture CSR 3
02D0 2098	SP1_ERR_CAPT_DBG4	Port 1 Packet/Control Symbol Error Capture CSR 4
02D0 209C - 02D0 20A4	-	Reserved
02D0 20A8	SP1_ERR_RATE	Port 1 Error Rate CSR
02D0 20AC	SP1_ERR_THRESH	Port 1 Error Rate Threshold CSR
02D0 20B0 - 02D0 20BC	-	Reserved
02D0 20C0	SP2_ERR_DET	Port 2 Error Detect CSR
02D0 20C4	SP2_RATE_EN	Port 2 Error Enable CSR
02D0 20C8	SP2_ERR_ATTR_CAPT_DBG0	Port 2 Attributes Error Capture CSR 0
02D0 20CC	SP2_ERR_CAPT_DBG1	Port 2 Packet/Control Symbol Error Capture CSR 1
02D0 20D0	SP2_ERR_CAPT_DBG2	Port 2 Packet/Control Symbol Error Capture CSR 2
02D0 20D4	SP2_ERR_CAPT_DBG3	Port 2 Packet/Control Symbol Error Capture CSR 3
02D0 20D8	SP2_ERR_CAPT_DBG4	Port 2 Packet/Control Symbol Error Capture CSR 4
02D0 20DC - 02D0 20E4	-	Reserved
02D0 20E8	SP2_ERR_RATE	Port 2 Error Rate CSR
02D0 20EC	SP2_ERR_THRESH	Port 2 Error Rate Threshold CSR
02D0 20F0 - 02D0 20FC	-	Reserved
02D0 2100	SP3_ERR_DET	Port 3 Error Detect CSR
02D0 2104	SP3_RATE_EN	Port 3 Error Enable CSR
02D0 2108	SP3_ERR_ATTR_CAPT_DBG0	Port 3 Attributes Error Capture CSR 0
02D0 210C	SP3_ERR_CAPT_DBG1	Port 3 Packet/Control Symbol Error Capture CSR 1
02D0 2110	SP3_ERR_CAPT_DBG2	Port 3 Packet/Control Symbol Error Capture CSR 2

PRODUCT PREVIEW

Table 7-111 RapidIO Control Registers (Part 11 of 12)

Hex Address Range	Acronym	Register Name
02D0 2114	SP3_ERR_CAPT_DBG3	Port 3 Packet/Control Symbol Error Capture CSR 3
02D0 2118	SP3_ERR_CAPT_DBG4	Port 3 Packet/Control Symbol Error Capture CSR 4
02D0 211C - 02D0 2124	-	Reserved
02D0 2128	SP3_ERR_RATE	Port 3 Error Rate CSR
02D0 212C	SP3_ERR_THRESH	Port 3 Error Rate Threshold CSR
02D0 2130 -02D1 0FFC	-	Reserved
Implementation Registers		
02D1 1000 - 02D1 1FFC	-	Reserved
02D1 2000	SP_IP_DISCOVERY_TIMER	Port IP Discovery Timer in 4x mode
02D1 2004	SP_IP_MODE	Port IP Mode CSR
02D1 2008	IP_PRESCAL	Port IP Prescaler Register
02D1 200C	-	Reserved
02D1 2010	SP_IP_PW_IN_CAPT0	Port-Write-In Capture CSR Register 0
02D1 2014	SP_IP_PW_IN_CAPT1	Port-Write-In Capture CSR Register 1
02D1 2018	SP_IP_PW_IN_CAPT2	Port-Write-In Capture CSR Register 2
02D1 201C	SP_IP_PW_IN_CAPT3	Port-Write-In Capture CSR Register 3
02D1 2020 - 02D1 3FFC	-	Reserved
02D1 4000	SP0_RST_OPT	Port 0 Reset Option CSR
02D1 4004	SP0_CTL_INDEP	Port 0 Control Independent Register
02D1 4008	SP0_SILENCE_TIMER	Port 0 Silence Timer Register
02D1 400C	SP0_MULT_EVNT_CS	Port 0 Multicast-Event Control Symbol Request Register
02D1 4010	-	Reserved
02D1 4014	SP0_CS_TX	Port 0 Control Symbol Transmit Register
02D1 4018 - 02D1 40FC	-	Reserved
02D1 4100	SP1_RST_OPT	Port 1 Reset Option CSR
02D1 4104	SP1_CTL_INDEP	Port 1 Control Independent Register
02D1 4108	SP1_SILENCE_TIMER	Port 1 Silence Timer Register
02D1 410C	SP1_MULT_EVNT_CS	Port 1 Multicast-Event Control Symbol Request Register
02D1 4110	-	Reserved
02D1 4114	SP1_CS_TX	Port 1 Control Symbol Transmit Register
02D1 4118 - 02D1 41FC	-	Reserved
02D1 4200	SP2_RST_OPT	Port 2 Reset Option CSR
02D1 4204	SP2_CTL_INDEP	Port 2 Control Independent Register
02D1 4208	SP2_SILENCE_TIMER	Port 2 Silence Timer Register
02D1 420C	SP2_MULT_EVNT_CS	Port 2 Multicast-Event Control Symbol Request Register
02D1 4214	SP2_CS_TX	Port 2 Control Symbol Transmit Register
02D1 4218 - 02D1 42FC	-	Reserved
02D1 4300	SP3_RST_OPT	Port 3 Reset Option CSR
02D1 4304	SP3_CTL_INDEP	Port 3 Control Independent Register
02D1 4308	SP3_SILENCE_TIMER	Port 3 Silence Timer Register
02D1 430C	SP3_MULT_EVNT_CS	Port 3 Multicast-Event Control Symbol Request Register
02D1 4310	-	Reserved
02D1 4314	SP3_CS_TX	Port 3 Control Symbol Transmit Register

PRODUCT PREVIEW

Table 7-111 RapidIO Control Registers (Part 12 of 12)

Hex Address Range	Acronym	Register Name
02D1 4318 - 02D2 0FFF	-	Reserved
02D2 1000 - 02DF FFFF	-	Reserved
End of Table 7-111		

7.20.3 Serial RapidIO Electrical Data/Timing

The *TMS320TCI6484 and TMS320C6457 SerDes Implementation Guidelines* application report (literature number SPRAAY1) specifies a complete printed circuit board (PCB) solution for the C6457 as well as a list of compatible SRIO devices showing two DSPs connected via a 4× SRIO link. TI has performed the simulation and system characterization to ensure all SRIO interface timings in this solution are met; therefore, no electrical data/timing information is supplied here for this interface.

Note—TI supports ***only*** designs that follow the board design guidelines outlined in the application report.

Serial RapidIO is electrically compliant with the *RapidIO™ Interconnect Specification, Part VI: Physical Layer 1×/4× LP-Serial Specification*, Revision 1.3.

7.21 General-Purpose Input/Output (GPIO)

7.21.1 GPIO Device-Specific Information

On the TMS320C6457, the GPIO peripheral pins GP[15:0] are also used to latch configuration pins. For more detailed information on device/peripheral configuration and the C6457 device pin muxing, see Section 3 "Device Configuration" on page 59.

7.21.2 GPIO Peripheral Register Description(s)

Table 7-112 GPIO Registers

Hex Address Range	Acronym	Register Name
02B0 0008	BINTEN	GPIO interrupt per bank enable register
02B0 000C	-	Reserved
02B0 0010	DIR	GPIO Direction Register
02B0 0014	OUT_DATA	GPIO Output Data register
02B0 0018	SET_DATA	GPIO Set Data register
02B0 001C	CLR_DATA	GPIO Clear Data Register
02B0 0020	IN_DATA	GPIO Input Data Register
02B0 0024	SET_RIS_TRIG	GPIO Set Rising Edge Interrupt Register
02B0 0028	CLR_RIS_TRIG	GPIO Clear Rising Edge Interrupt Register
02B0 002C	SET_FAL_TRIG	GPIO Set Falling Edge Interrupt Register
02B0 0030	CLR_FAL_TRIG	GPIO Clear Falling Edge Interrupt Register
02B0 008C	-	Reserved
02B0 0090 - 02B0 00FF	-	Reserved
02B0 0100 - 02B0 3FFF	-	Reserved
End of Table 7-112		

PRODUCT PREVIEW

7.21.3 GPIO Electrical Data/Timing

Table 7-113 GPIO Input Timing Requirements [1]
(see Figure 7-50)

No.			Min	Max	Unit
1	$t_{w(GPOH)}$	Pulse duration, GPOx high	12C		ns
2	$t_{w(GPOL)}$	Pulse duration, GPOx low	12C		ns
End of Table 7-113					

1 If CORECLKSEL = 0, C = 1 ÷ CORECLK(NIP) frequency, in ns. If CORECLKSEL = 1, C = 1 ÷ ALTCORECLK frequency, in ns.

Table 7-114 GPIO Output Switching Characteristics [1] [2]
(see Figure 7-50)

No.	Parameter		Min	Max	Unit
1	$t_{w(GPOH)}$	Pulse duration, GPOx high	12C - 3		ns
2	$t_{w(GPOL)}$	Pulse duration, GPOx low	12C - 3		ns
End of Table 7-114					

1 Over recommended operating conditions.
2 If CORECLKSEL = 0, C = 1 ÷ CORECLK(NIP) frequency, in ns. If CORECLKSEL = 1, C = 1 ÷ ALTCORECLK frequency, in ns.

Figure 7-50 GPIO Timing

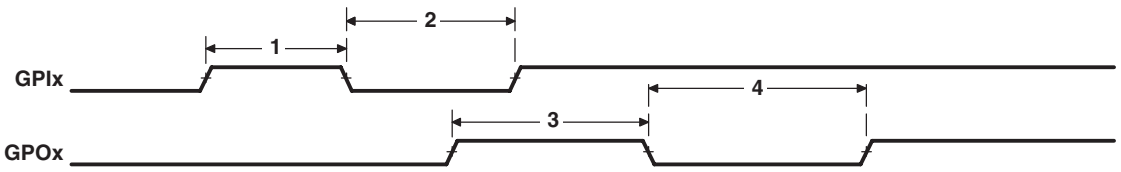

7.22 Emulation Features and Capability

7.22.1 Advanced Event Triggering (AET)

The TMS320C6457 device supports Advanced Event Triggering (AET). This capability can be used to debug complex problems as well as understand performance characteristics of user applications. AET provides the following capabilities:

- **Hardware Program Breakpoints:** specify addresses or address ranges that can generate events such as halting the processor or triggering the trace capture.
- **Data Watchpoints:** specify data variable addresses, address ranges, or data values that can generate events such as halting the processor or triggering the trace capture.
- **Counters:** count the occurrence of an event or cycles for performance monitoring.
- **State Sequencing:** allows combinations of hardware program breakpoints and data watchpoints to precisely generate events for complex sequences.

For more information on AET, see the following documents:

- *Using Advanced Event Triggering to Find and Fix Intermittent Real-Time Bugs* application report (literature number SPRA753)
- *Using Advanced Event Triggering to Debug Real-Time Problems in High Speed Embedded Microprocessor Systems* application report (literature number SPRA387)

PRODUCT PREVIEW

PRODUCT PREVIEW

7.22.2 Trace

The C6457 device supports Trace. Trace is a debug technology that provides a detailed, historical account of application code execution, timing, and data accesses. Trace collects, compresses, and exports debug information for analysis. Trace works in real-time and does not impact the execution of the system.

For more information on board design guidelines for Trace Advanced Emulation, see the *60-Pin Emulation Header Technical Reference* (literature number SPRU655).

7.22.2.1 Trace Electrical Data/Timing

Table 7-115 Switching Characteristics for Trace (1)
(see Figure 7-51)

No.	Parameter		Min	Max	Unit
1	t_w(DPnH)	Pulse duration, DPn/EMUn high	2.4		ns
1	t_w(DPnH)90%	Pulse duration, DPn/EMUn high detected at 90% Voh	1.5		ns
2	t_w(DPnL)	Pulse duration, DPn/EMUn low	2.4		ns
2	t_w(DPnL)10%	Pulse duration, DPn/EMUn low detected at 10% Voh	1.5		ns
3	t_{sko}(DPn)	Output skew time, time delay difference between DPn/EMUn pins configured as trace	-500	500	ps
End of Table 7-115					

1 Over recommended operating conditions.

Figure 7-51 Trace Timing

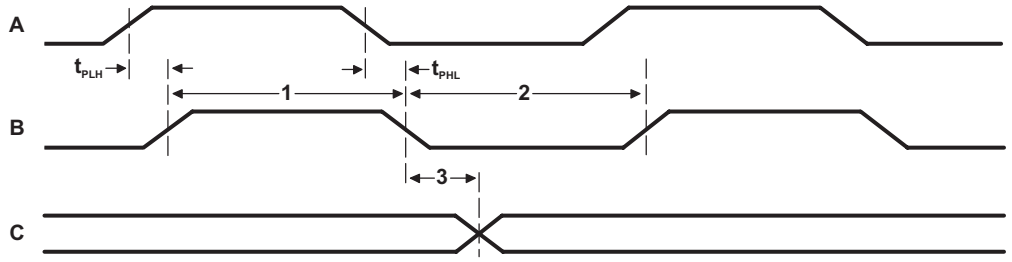

7.22.3 IEEE 1149.1 JTAG

The JTAG interface is used to support boundary scan and emulation of the device. The boundary scan supported allows for an asynchronous TRST and only the 5 baseline JTAG signals (e.g., no EMU[1:0]) required for boundary scan. Most interfaces on the device follow the Boundary Scan Test Specification (IEEE1149.1), while all of the SerDes (SRIO and SGMII) support the AC-coupled net test defined in *AC-Coupled Net Test Specification* (IEEE1149.6).

It is expected that all compliant devices are connected through the same JTAG interface, in daisy-chain fashion, in accordance with the specification. The JTAG interface uses 1.8-V LVCMOS buffers, compliant with the *Power Supply Voltage and Interface Standard for Nonterminated Digital Integrated Circuit Specification* (EAI/JESD8-5).

7.22.3.1 IEEE 1149.1 JTAG Compatibility Statement

For maximum reliability, the C6457 DSP includes an internal pulldown (IPD) on the TRST pin to ensure that TRST will always be asserted upon power up and the DSP's internal emulation logic will always be properly initialized when this pin is not routed out. JTAG controllers from Texas Instruments actively drive TRST high. However, some third-party JTAG controllers may not drive TRST high but expect the use of an external pullup resistor on TRST. When using this type of JTAG controller, assert TRST to initialize the DSP after powerup and externally drive TRST high before attempting any emulation or boundary scan operations.

7.22.3.2 JTAG Electrical Data/Timing

Table 7-116 JTAG Test Port Timing Requirements
(see Figure 7-52)

No.			Min	Max	Unit
1	$t_{c(TCK)}$	Cycle time, TCK	10	20	ns
3	$t_{su(TDIV-TCKH)}$	Setup time, TDI/TMS/TRST valid before TCK high	2		ns
4	$t_{h(TCKH-TDIV)}$	Hold time, TDI/TMS/TRST valid after TCK high	5		ns
End of Table 7-116					

Table 7-117 JTAG Test Port Switching Characteristics [1]
(see Figure 7-52)

No.	Parameter		Min	Max	Unit
2	$t_{d(TCKL-TDOV)}$	Delay time, TCK low to TDO valid		0.25 x $t_{c(TCK)}$	ns
End of Table 7-117					

1 Over recommended operating conditions.

Figure 7-52 JTAG Test-Port Timing

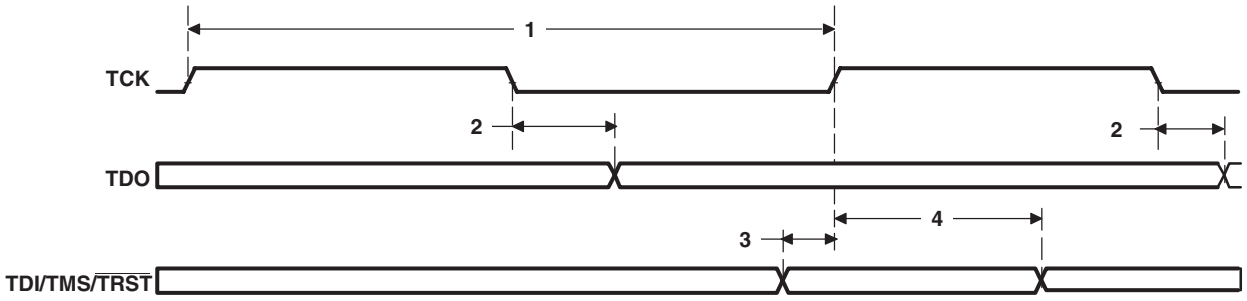

7.22.3.3 HS-RTDX Electrical Data/Timing

Table 7-118 Timing Requirements for HS-RTDX
(see Figure 7-53)

No.			Min	Max	Unit
1	$t_{c(TCK)}$	Cycle time, TCK	20		ns
2	$t_{su(TDIV-TCKH)}$	Setup time, EMUn valid before TCK high	1.5		ns
3	$t_{h(TCKH-TDIV)}$	Hold time, EMUn valid after TCK high	1.5		ns
End of Table 7-118					

Table 7-119 Switching Characteristics for HS-RTDX [1]
(see Figure 7-53)

No.	Parameter		Min	Max	Unit
4	$t_{d(TCKL-TDOV)}$	Delay time, TCK high to EMUn valid	3	16.5	ns
End of Table 7-119					

1 Over recommended operating conditions.

PRODUCT PREVIEW

Figure 7-53 HS-RTDX Timing

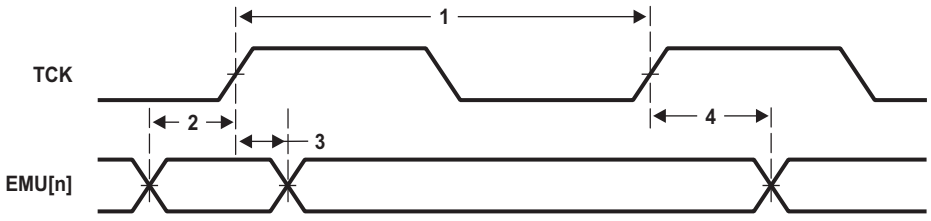

PRODUCT PREVIEW

8 Mechanical Data

8.1 Thermal Data

Table 8-1 shows the thermal resistance characteristics for the PBGA - CMH/GMH mechanical package.

Table 8-1 Thermal Resistance Characteristics (PBGA Package) [CMH/GMH]

No.			°C/W
1	$R\theta_{JC}$	Junction-to-case	1.53
2	$R\theta_{JB}$	Junction-to-board	8.1
End of Table 8-1			

8.2 Packaging Information

The following packaging information reflects the most current released data available for the designated device(s). This data is subject to change without notice and without revision of this document.

PRODUCT PREVIEW

PRODUCT PREVIEW

8.3 Package CMH

Figure 8-1 CMH (S–PBGA–N688) Pb-Free Plastic Ball Grid Array

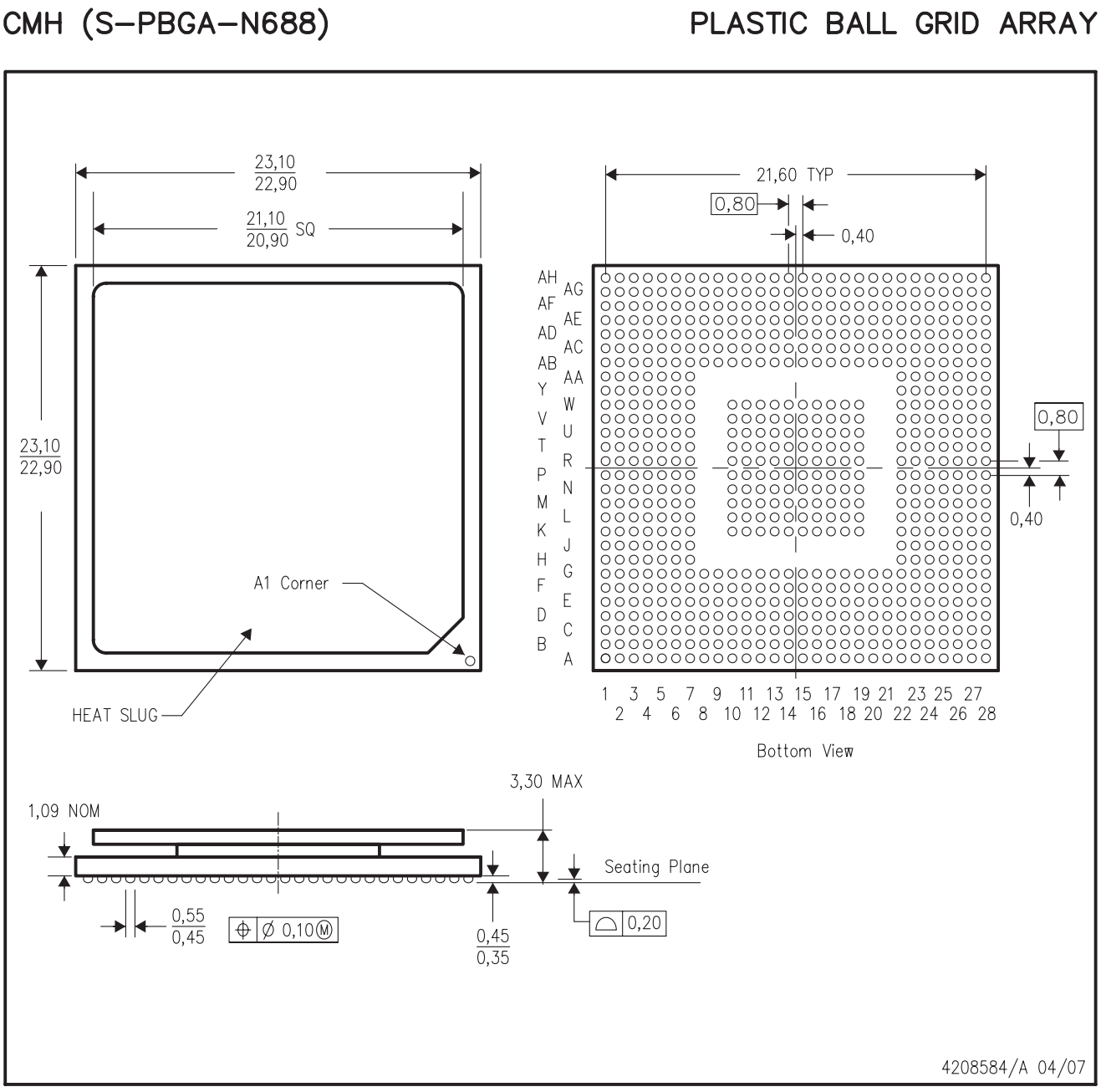

NOTES:
A. All linear dimensions are in millimeters.
B. This drawing is subject to change without notice.
C. Flip chip application only.
D. Lead–free die bump and solder ball.
E. Thermally enhanced plastic package with heat slug (HSL).

2009 Texas Instruments Incorporated

8.4 Package GMH

Figure 8-2 GMH (S–PBGA–N688) Plastic Ball Grid Array

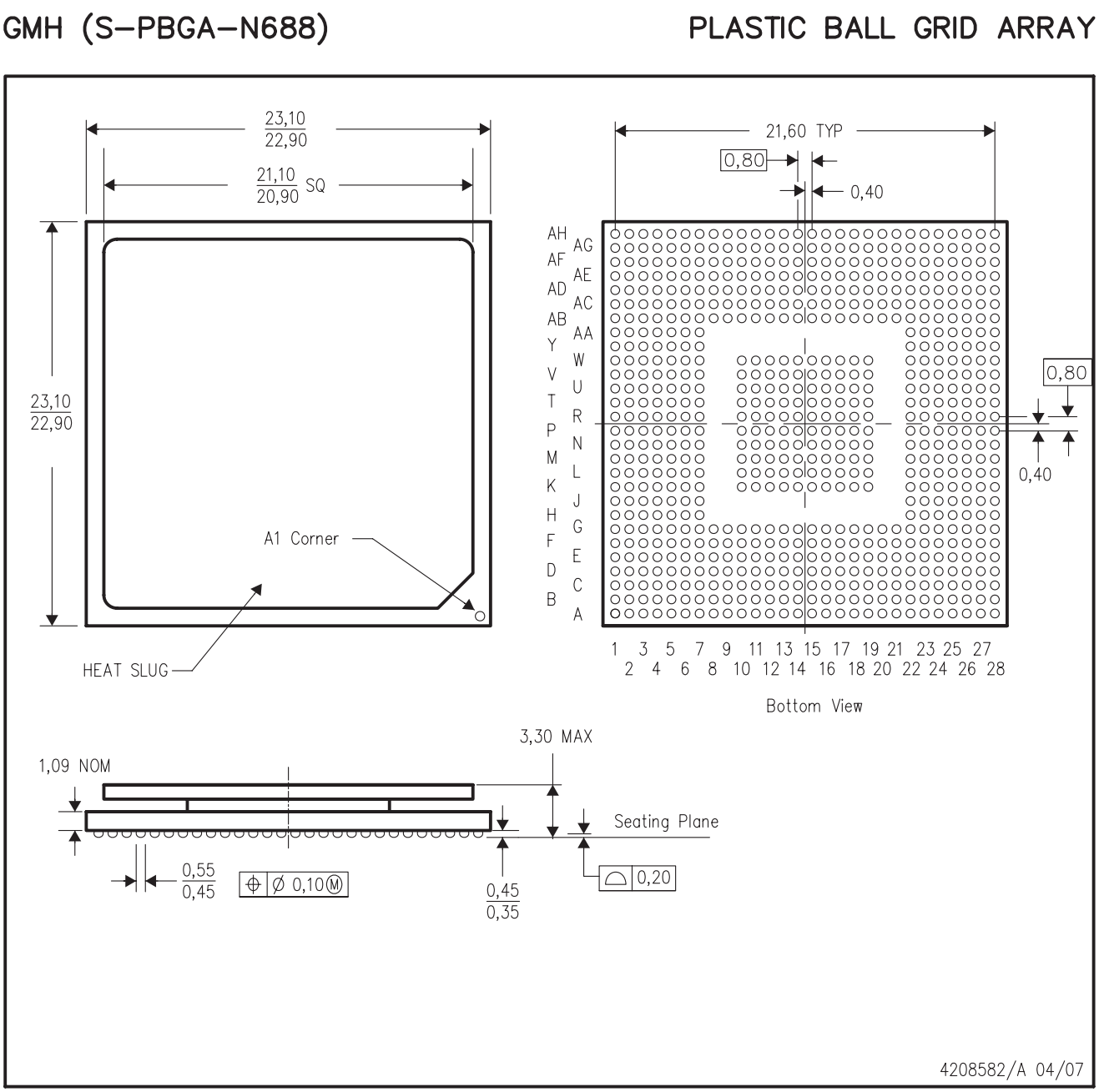

NOTES:
A. All linear dimensions are in millimeters.
B. This drawing is subject to change without notice.
C. Thermally enhanced plastic package with heat slug (HSL).
D. Flip chip application only.

PRODUCT PREVIEW

PRODUCT PREVIEW

2009 Texas Instruments Incorporated

PACKAGING INFORMATION

Orderable part number	Status (1)	Material type (2)	Package | Pins	Package qty | Carrier	RoHS (3)	Lead finish/ Ball material (4)	MSL rating/ Peak reflow (5)	Op temp (°C)	Part marking (6)
TMS320C6457CCMH	Active	Production	FCBGA (CMH) | 688	60 | JEDEC TRAY (5+1)	Yes	SNAGCU	Level-4-245C-72HR	0 to 100	TMS320C6457CMH @2007 TI
TMS320C6457CCMH.A	Active	Production	FCBGA (CMH) | 688	60 | JEDEC TRAY (5+1)	Yes	SNAGCU	Level-4-245C-72HR	0 to 100	TMS320C6457CMH @2007 TI
TMS320C6457CCMH2	Active	Production	FCBGA (CMH) | 688	60 | JEDEC TRAY (5+1)	Yes	SNAGCU	Level-4-245C-72HR	0 to 95	TMS320C6457CMH 1.2GHZ @2007 TI
TMS320C6457CCMH2.A	Active	Production	FCBGA (CMH) | 688	60 | JEDEC TRAY (5+1)	Yes	SNAGCU	Level-4-245C-72HR	0 to 95	TMS320C6457CMH 1.2GHZ @2007 TI
TMS320C6457CCMH8	Active	Production	FCBGA (CMH) | 688	60 | JEDEC TRAY (5+1)	Yes	SNAGCU	Level-4-245C-72HR	0 to 0	TMS320C6457CMH 850MHZ @2007 TI
TMS320C6457CCMH8.A	Active	Production	FCBGA (CMH) | 688	60 | JEDEC TRAY (5+1)	Yes	SNAGCU	Level-4-245C-72HR	0 to 0	TMS320C6457CMH 850MHZ @2007 TI
TMS320C6457CCMHA	Active	Production	FCBGA (CMH) | 688	60 | JEDEC TRAY (5+1)	Yes	SNAGCU	Level-4-245C-72HR	0 to 0	TMS320C6457CCMH A1GHZ @2007 TI
TMS320C6457CCMHA.A	Active	Production	FCBGA (CMH) | 688	60 | JEDEC TRAY (5+1)	Yes	SNAGCU	Level-4-245C-72HR	0 to 0	TMS320C6457CCMH A1GHZ @2007 TI
TMS320C6457CCMHA2	Active	Production	FCBGA (CMH) | 688	60 | JEDEC TRAY (5+1)	Yes	SNAGCU	Level-4-245C-72HR	0 to 0	TMS320C6457CMH A1.2GHZ @2007 TI
TMS320C6457CCMHA2.A	Active	Production	FCBGA (CMH) | 688	60 | JEDEC TRAY (5+1)	Yes	SNAGCU	Level-4-245C-72HR	0 to 0	TMS320C6457CMH A1.2GHZ @2007 TI

(1) **Status:** For more details on status, see our product life cycle.

(2) **Material type:** When designated, preproduction parts are prototypes/experimental devices, and are not yet approved or released for full production. Testing and final process, including without limitation quality assurance, reliability performance testing, and/or process qualification, may not yet be complete, and this item is subject to further changes or possible discontinuation. If available for ordering, purchases will be subject to an additional waiver at checkout, and are intended for early internal evaluation purposes only. These items are sold without warranties of any kind.

(3) **RoHS values:** Yes, No, RoHS Exempt. See the TI RoHS Statement for additional information and value definition.

(4) **Lead finish/Ball material:** Parts may have multiple material finish options. Finish options are separated by a vertical ruled line. Lead finish/Ball material values may wrap to two lines if the finish value exceeds the maximum column width.

(5) **MSL rating/Peak reflow:** The moisture sensitivity level ratings and peak solder (reflow) temperatures. In the event that a part has multiple moisture sensitivity ratings, only the lowest level per JEDEC standards is shown. Refer to the shipping label for the actual reflow temperature that will be used to mount the part to the printed circuit board.

(6) **Part marking:** There may be an additional marking, which relates to the logo, the lot trace code information, or the environmental category of the part.

Multiple part markings will be inside parentheses. Only one part marking contained in parentheses and separated by a "~" will appear on a part. If a line is indented then it is a continuation of the previous line and the two combined represent the entire part marking for that device.

Important Information and Disclaimer: The information provided on this page represents TI's knowledge and belief as of the date that it is provided. TI bases its knowledge and belief on information provided by third parties, and makes no representation or warranty as to the accuracy of such information. Efforts are underway to better integrate information from third parties. TI has taken and continues to take reasonable steps to provide representative and accurate information but may not have conducted destructive testing or chemical analysis on incoming materials and chemicals. TI and TI suppliers consider certain information to be proprietary, and thus CAS numbers and other limited information may not be available for release.

In no event shall TI's liability arising out of such information exceed the total purchase price of the TI part(s) at issue in this document sold by TI to Customer on an annual basis.

CMH (S–PBGA–N688) PLASTIC BALL GRID ARRAY

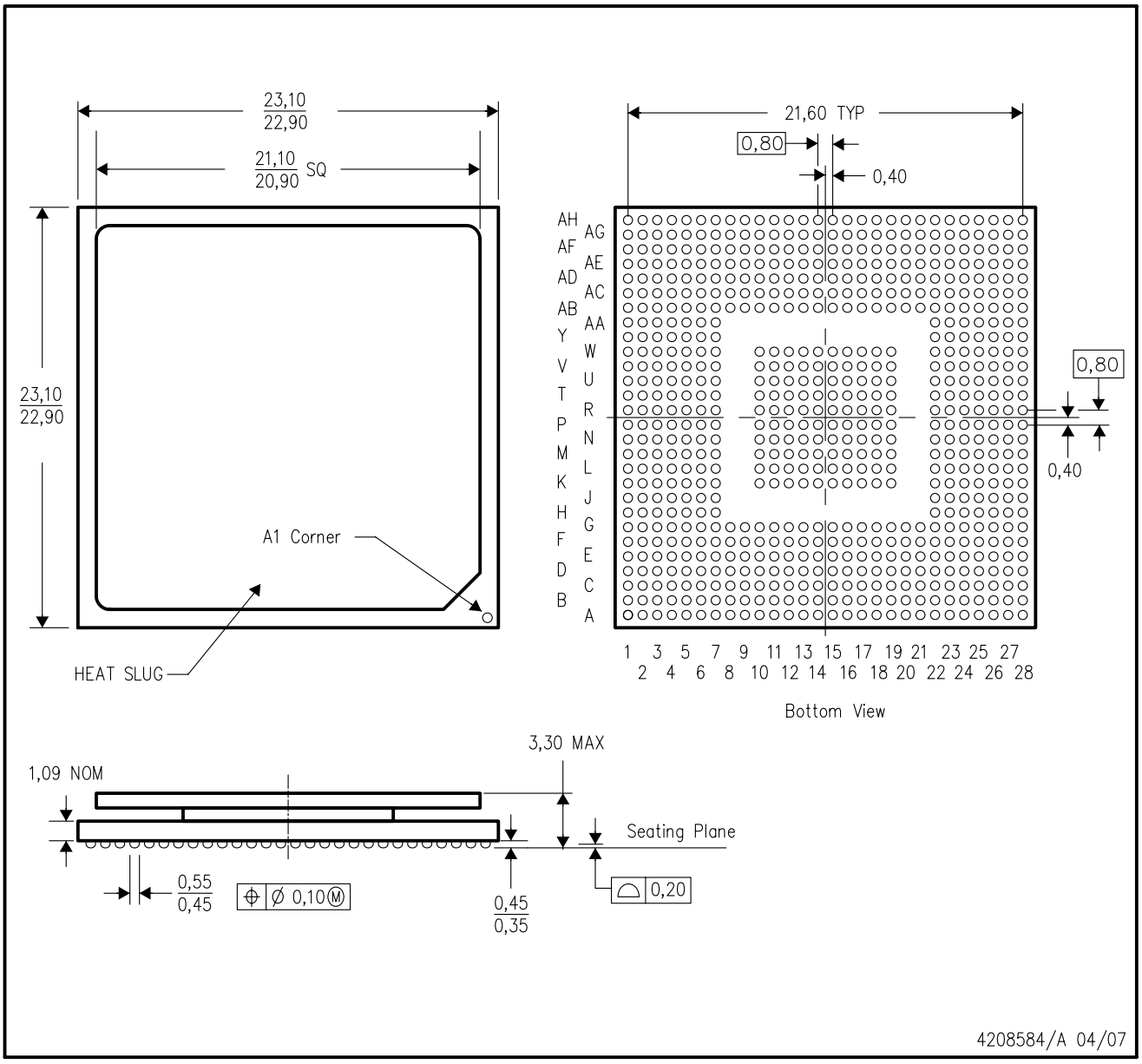

NOTES:
A. All linear dimensions are in millimeters.
B. This drawing is subject to change without notice.
C. Flip chip application only.
D. Lead–free die bump and solder ball.
E. Thermally enhanced plastic package with heat slug (HSL).

GMH (S–PBGA–N688) PLASTIC BALL GRID ARRAY

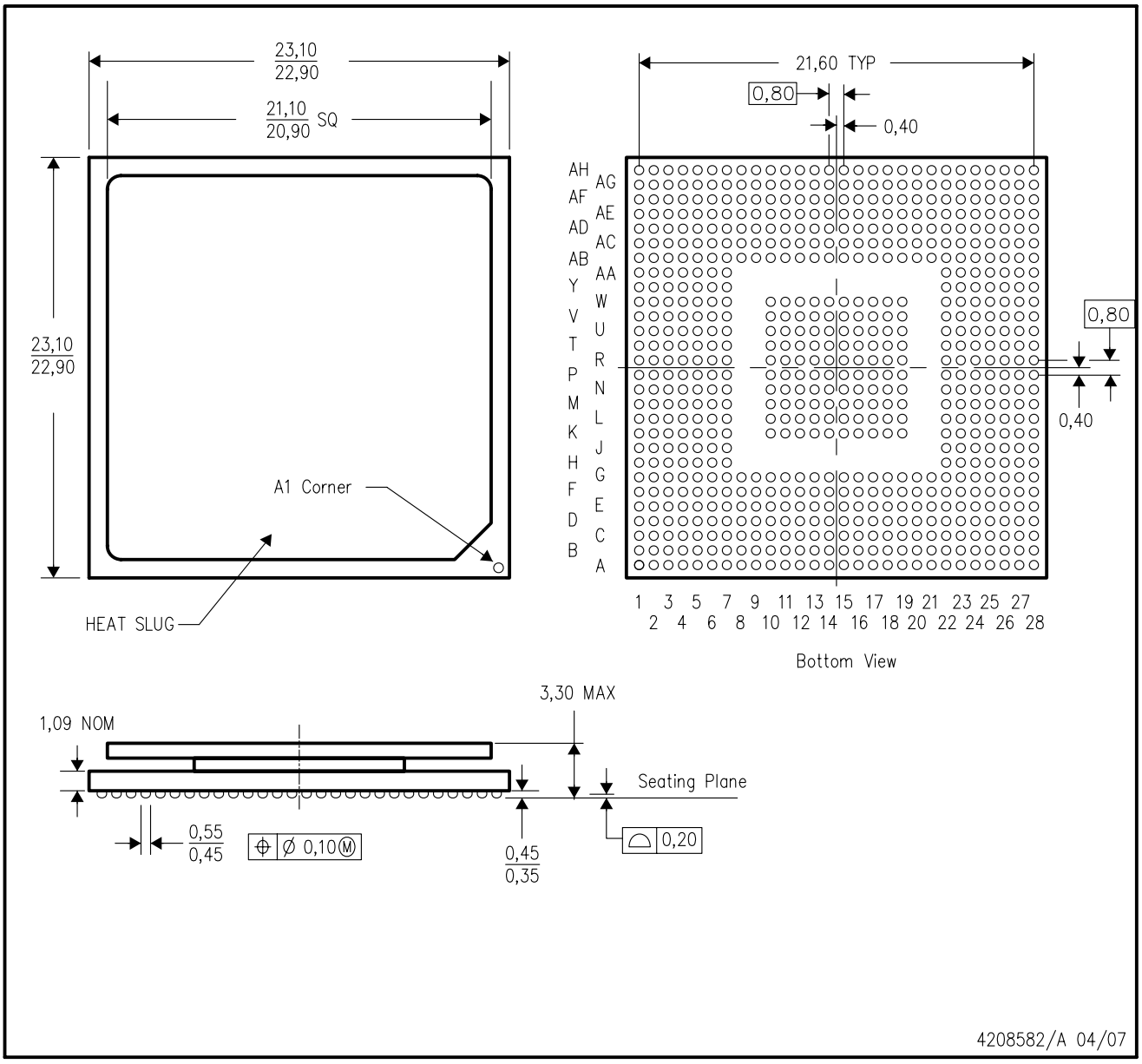

NOTES:
A. All linear dimensions are in millimeters.
B. This drawing is subject to change without notice.
C. Thermally enhanced plastic package with heat slug (HSL).
D. Flip chip application only.

IMPORTANT NOTICE AND DISCLAIMER

TI PROVIDES TECHNICAL AND RELIABILITY DATA (INCLUDING DATASHEETS), DESIGN RESOURCES (INCLUDING REFERENCE DESIGNS), APPLICATION OR OTHER DESIGN ADVICE, WEB TOOLS, SAFETY INFORMATION, AND OTHER RESOURCES “AS IS” AND WITH ALL FAULTS, AND DISCLAIMS ALL WARRANTIES, EXPRESS AND IMPLIED, INCLUDING WITHOUT LIMITATION ANY IMPLIED WARRANTIES OF MERCHANTABILITY, FITNESS FOR A PARTICULAR PURPOSE OR NON-INFRINGEMENT OF THIRD PARTY INTELLECTUAL PROPERTY RIGHTS.

These resources are intended for skilled developers designing with TI products. You are solely responsible for (1) selecting the appropriate TI products for your application, (2) designing, validating and testing your application, and (3) ensuring your application meets applicable standards, and any other safety, security, regulatory or other requirements.

These resources are subject to change without notice. TI grants you permission to use these resources only for development of an application that uses the TI products described in the resource. Other reproduction and display of these resources is prohibited. No license is granted to any other TI intellectual property right or to any third party intellectual property right. TI disclaims responsibility for, and you fully indemnify TI and its representatives against any claims, damages, costs, losses, and liabilities arising out of your use of these resources.

TI’s products are provided subject to TI’s Terms of Sale, TI’s General Quality Guidelines, or other applicable terms available either on ti.com or provided in conjunction with such TI products. TI’s provision of these resources does not expand or otherwise alter TI’s applicable warranties or warranty disclaimers for TI products. Unless TI explicitly designates a product as custom or customer-specified, TI products are standard, catalog, general purpose devices.

TI objects to and rejects any additional or different terms you may propose.

Copyright © 2026, Texas Instruments Incorporated

Last updated 10/2025

Looking for pricing, stock, or lifecycle information?

Click below to explore more details on WIN SOURCE:

- View TMS320C6457CGMHA on WIN SOURCE
- Texas Instruments Information

Optimize Your Supply Chain with WIN SOURCE Solutions

- Global Sourcing Solution
- Obsolete Management
- Cost Control Management
- Shortage Management
- Alternative Solution
- Excess Inventory Management