- High-Performance Fixed-Point Digital Signal Processor (DSP) − TMS320C6205
  - 5-ns Instruction Cycle Time
  - 200-MHz Clock Rate
  - Eight 32-Bit Instructions/Cycle
  - 1600 MIPS
- VelociTI™ Advanced-Very-Long-Instruction-Word (VLIW) TMS320C62x™ DSP Core
  - Eight Highly Independent Functional Units:
    - Six ALUs (32-/40-Bit)
    - Two 16-Bit Multipliers (32-Bit Result)
  - Load-Store Architecture With 32 32-Bit General-Purpose Registers
  - Instruction Packing Reduces Code Size
  - All Instructions Conditional
- Instruction Set Features
  - Byte-Addressable (8-, 16-, 32-Bit Data)
  - 8-Bit Overflow Protection
  - Saturation
  - Bit-Field Extract, Set, Clear
  - Bit-Counting
  - Normalization
- 1M-Bit On-Chip SRAM
  - 512K-Bit Internal Program/Cache (16K 32-Bit Instructions)
  - 512K-Bit Dual-Access Internal Data (64K Bytes)
    - Organized as Two 32K-Byte Blocks for Improved Concurrency
- 32-Bit External Memory Interface (EMIF)
  - Glueless Interface to Synchronous Memories: SDRAM or SBSRAM
  - Glueless Interface to Asynchronous Memories: SRAM and EPROM
  - 52M-Byte Addressable External Memory Space
- Four-Channel Bootloading Direct-Memory-Access (DMA) Controller With an Auxiliary Channel
- Flexible Phase-Locked-Loop (PLL) Clock Generator
- 32-Bit/33-MHz Peripheral Component Interconnect (PCI) Master/Slave Interface Conforms to:
  - PCI Specification 2.2
  - Power Management Interface 1.1

  Meets Requirements of PC99
  - PCI Access to All On-Chip RAM, Peripherals, and External Memory (via EMIF)
  - Four 8-Deep x 32-Wide FIFOs for Efficient PCI Bus Data Transfer
  - 3.3/5-V PCI Operation
  - Three PCI Bus Address Registers:
    - Prefetchable Memory
    - Non-Prefetchable Memory I/O
  - Supports 4-Wire Serial EEPROM Interface
  - PCI Interrupt Request Under DSP Program Control
  - DSP Interrupt Via PCI I/O Cycle
- Two Multichannel Buffered Serial Ports (McBSPs)
  - Direct Interface to T1/E1, MVIP, SCSA Framers
  - ST-Bus-Switching Compatible
  - Up to 256 Channels Each
  - AC97-Compatible
  - Serial-Peripheral-Interface (SPI) Compatible (Motorola™)
- Two 32-Bit General-Purpose Timers
- IEEE-1149.1 (JTAG†) Boundary-Scan-Compatible
- 288-Pin MicroStar BGA™ Package (GHK and ZHK Suffixes)
- 0.15-μm/5-Level Metal Process
  - CMOS Technology
- 3.3-V I/Os, 1.5-V Internal, 5-V Voltage Tolerance for PCI I/O Pins



Please be aware that an important notice concerning availability, standard warranty, and use in critical applications of Texas Instruments semiconductor products and disclaimers thereto appears at the end of this data sheet.

VelociTI, TMS320C62x, and MicroStar BGA are trademarks of Texas Instruments.
Motorola is a trademark of Motorola, Inc.
† IEEE Standard 1149.1-1990 Standard-Test-Access Port and Boundary Scan Architecture.

PRODUCTION DATA information is current as of publication date. Products conform to specifications per the terms of Texas Instruments standard warranty. Production processing does not necessarily include testing of all parameters.

Copyright © 2006, Texas Instruments Incorporated

Table of Contents

revision history 3
GHK and ZHK BGA packages (bottom view) 4
description 5
device characteristics 6
functional and CPU (DSP core) block diagram 7
CPU (DSP core) description 8
memory map summary 10
signal groups description 11
signal descriptions 14
development support 23
documentation support 26
clock PLL 27
power-down mode logic 29
power-supply sequencing 32
absolute maximum ratings over operating case temperature range 33
recommended operating conditions 33
recommended operating conditions (PCI only) 33
electrical characteristics over recommended rangesof supply voltage and operating case temperature 34
electrical characteristics over recommended ranges of supply voltage and operating case temperature (PCI only) 34
parameter measurement information 35
input and output clocks 36
asynchronous memory timing 38
synchronous-burst memory timing 41
synchronous DRAM timing 43
$\overline{\text{HOLD}}$/$\overline{\text{HOLDA}}$ timing 47
reset timing 48
external interrupt timing 50
PCI I/O timings 51
PCI reset timing 52
PCI serial EEPROM interface timing 53
multichannel buffered serial port timing 54
DMAC, timer, power-down timing 64
JTAG test-port timing 66
mechanical data 67

REVISION HISTORY

This data sheet revision history highlights the technical changes made to the SPR106E device-specific data sheet to make it an SPRS106F revision. It also highlights technical changes made to SPRS219F to generate SPRS219G . These changes are marked by **[Revision G]** in the Revision History below.

Scope: Applicable updates to the C62x device family, specifically relating to the C6205 device, have been incorporated.

PAGE(S) NO.	ADDITIONS/CHANGES/DELETIONS
	Added information for the ZHK Mechanical Package **[Revision G]** Moved Revision History to front of document **[Revision G]**
6	Device Characteristics, Characteristics of the C6205 Processor table: Hardware Features, Peripherals: Updated description for PCI
24	device and development-support tool nomenclature section: Updated paragraphs and Figure **[Revision G]**
28	Table 4, C6205 PLL Component Selection Table, Typical Lock Time (µs) section: Changed “75 MS” to “75 µs” **[Revision G]**
67−68	Added “Mechanical Data” title and paragraph Added Package Information section **[Revision G]**

GHK and ZHK BGA packages (bottom view)

GHK and ZHK 288-PIN BALL GRID ARRAY (BGA) PACKAGES
(BOTTOM VIEW)

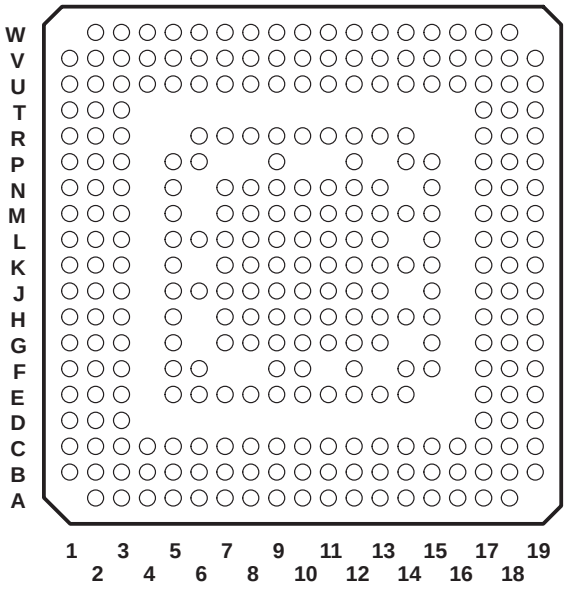

description

The TMS320C62x™ DSPs (including the TMS320C6205 device) compose the fixed-point DSP generation in the TMS320C6000™ DSP platform. The TMS320C6205 (C6205) device is based on the high-performance, advanced VelociTI™ very-long-instruction-word (VLIW) architecture developed by Texas Instruments (TI), making the C6205 an excellent choice for multichannel and multifunction applications.

With performance of up to 1600 million instructions per second (MIPS) at a clock rate of 200 MHz, the C6205 offers cost-effective solutions to high-performance DSP-programming challenges. The C6205 DSP possesses the operational flexibility of high-speed controllers and the numerical capability of array processors. This processor has 32 general-purpose registers of 32-bit word length and eight highly independent functional units. The eight functional units provide six arithmetic logic units (ALUs) for a high degree of parallelism and two 16-bit multipliers for a 32-bit result. The C6205 can produce two multiply-accumulates (MACs) per cycle for a total of 400 million MACs per second (MMACS). The C6205 DSP also has application-specific hardware logic, on-chip memory, and additional on-chip peripherals.

The C6205 includes a large bank of on-chip memory and has a powerful and diverse set of peripherals. Program memory consists of a 64K-byte block that is user-configurable as cache or memory-mapped program space. Data memory consists of two 32K-byte blocks of RAM. The peripheral set includes two multichannel buffered serial ports (McBSPs), two general-purpose timers, a peripheral component interconnect (PCI) module that supports 33-MHz master/slave interface and 4-wire serial EEPROM interface, and a glueless external memory interface (EMIF) capable of interfacing to SDRAM or SBSRAM and asynchronous peripherals.

The C6205 has a complete set of development tools which includes: a new C compiler, an assembly optimizer to simplify programming and scheduling, and a Windows™ debugger interface for visibility into source code execution.

TMS320C6000 is a trademark of Texas Instruments.
Windows is a registered trademark of Microsoft Corporation.

device characteristics

Table 1 provides an overview of the C6205 DSP. The table shows significant features of each device, including the capacity of on-chip RAM, the peripherals, the execution time, and the package type with pin count, etc.

Table 1. Characteristics of the C6205 Processor

HARDWARE FEATURES		C6205
Peripherals	EMIF	1
	DMA	4-Channel With Throughput Enhancements
	PCI (*Device ID*, bits 15:0, A106h [default value])	1
	McBSPs	2
	32-Bit Timers	2
Internal Program Memory	Size (Bytes)	64K
	Organization	1 Block: 64K Bytes Cache/Mapped Program
Internal Data Memory	Size (Bytes)	64K
	Organization	2 Blocks: Four 16-Bit Banks per Block, 50/50 Split
CPU ID+Rev ID	Control Status Register (CSR.[31:16])	0x0003
Frequency	MHz	200
Cycle Time	ns	5 ns (C6205-200)
Voltage	Core (V)	1.5
	I/O (V)	3.3
	Voltage Tolerance for PCI I/O Pins (V)	5.0
PLL Options	CLKIN frequency multiplier	Bypass (x1), x4, x6, x7, x8, x9, x10, and x11
BGA Package	16 x 16 mm	288-Pin MicroStar BGA™ (GHK/ZHK)
Process Technology	µm	0.15 µm
Product Status	Product Preview (PP) Advance Information (AI) Production Data (PD)	PD
Device Part Numbers	(For more details on the C6000™ DSP part numbering, see Figure 4)	TMX320C6205GHK TMX320C6205ZHK

C6000 is a trademark of Texas Instruments.

functional and CPU (DSP core) block diagram

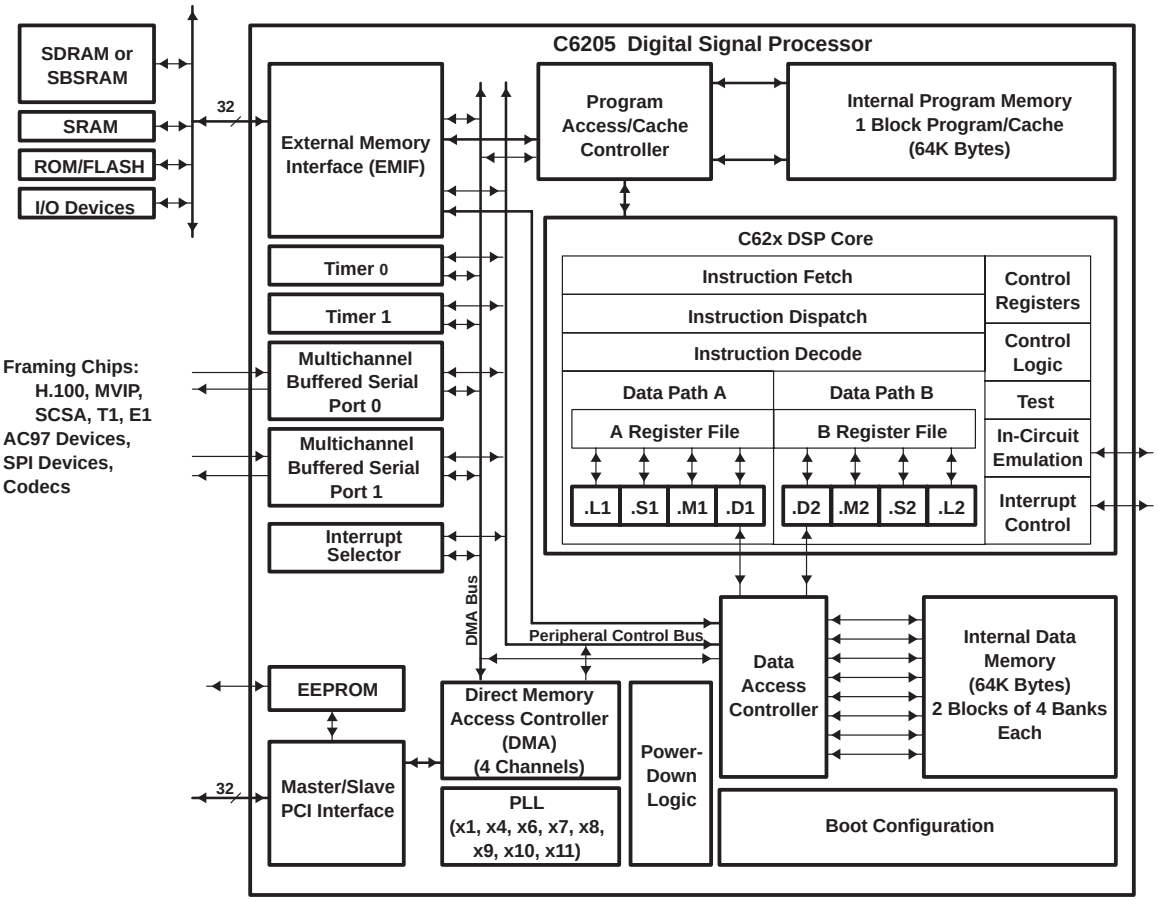

CPU (DSP core) description

The CPU fetches VelociTI™ advanced very-long instruction words (VLIW) (256 bits wide) to supply up to eight 32-bit instructions to the eight functional units during every clock cycle. The VelociTI™ VLIW architecture features controls by which all eight units do not have to be supplied with instructions if they are not ready to execute. The first bit of every 32-bit instruction determines if the next instruction belongs to the same execute packet as the previous instruction, or whether it should be executed in the following clock as a part of the next execute packet. Fetch packets are always 256 bits wide; however, the execute packets can vary in size. The variable-length execute packets are a key memory-saving feature, distinguishing the C62x CPU from other VLIW architectures.

The CPU features two sets of functional units. Each set contains four units and a register file. One set contains functional units .L1, .S1, .M1, and .D1; the other set contains units .D2, .M2, .S2, and .L2. The two register files each contain 16 32-bit registers for a total of 32 general-purpose registers. The two sets of functional units, along with two register files, compose sides A and B of the CPU [see the Functional and CPU (DSP Core) Block Diagram and Figure 1]. The four functional units on each side of the CPU can freely share the 16 registers belonging to that side. Additionally, each side features a single data bus connected to all the registers on the other side, by which the two sets of functional units can access data from the register files on the opposite side. While register access by functional units on the same side of the CPU as the register file can service all the units in a single clock cycle, register access using the register file across the CPU supports one read and one write per cycle.

Another key feature of the C62x CPU is the load/store architecture, where all instructions operate on registers (as opposed to data in memory). Two sets of data-addressing units (.D1 and .D2) are responsible for all data transfers between the register files and the memory. The data address driven by the .D units allows data addresses generated from one register file to be used to load or store data to or from the other register file. The C62x CPU supports a variety of indirect addressing modes using either linear- or circular-addressing modes with 5- or 15-bit offsets. All instructions are conditional, and most can access any one of the 32 registers. Some registers, however, are singled out to support specific addressing or to hold the condition for conditional instructions (if the condition is not automatically “true”). The two .M functional units are dedicated for multiplies. The two .S and .L functional units perform a general set of arithmetic, logical, and branch functions with results available every clock cycle.

The processing flow begins when a 256-bit-wide instruction fetch packet is fetched from a program memory. The 32-bit instructions destined for the individual functional units are “linked” together by “1” bits in the least significant bit (LSB) position of the instructions. The instructions that are “chained” together for simultaneous execution (up to eight in total) compose an execute packet. A “0” in the LSB of an instruction breaks the chain, effectively placing the instructions that follow it in the next execute packet. If an execute packet crosses the 256-bit wide fetch-packet boundary, the assembler places it in the next fetch packet, while the remainder of the current fetch packet is padded with NOP instructions. The number of execute packets within a fetch packet can vary from one to eight. Execute packets are dispatched to their respective functional units at the rate of one per clock cycle and the next 256-bit fetch packet is not fetched until all the execute packets from the current fetch packet have been dispatched. After decoding, the instructions simultaneously drive all active functional units for a maximum execution rate of eight instructions every clock cycle. While most results are stored in 32-bit registers, they can be subsequently moved to memory as bytes or half-words as well. All load and store instructions are byte-, half-word, or word-addressable.

CPU (DSP core) description (continued)

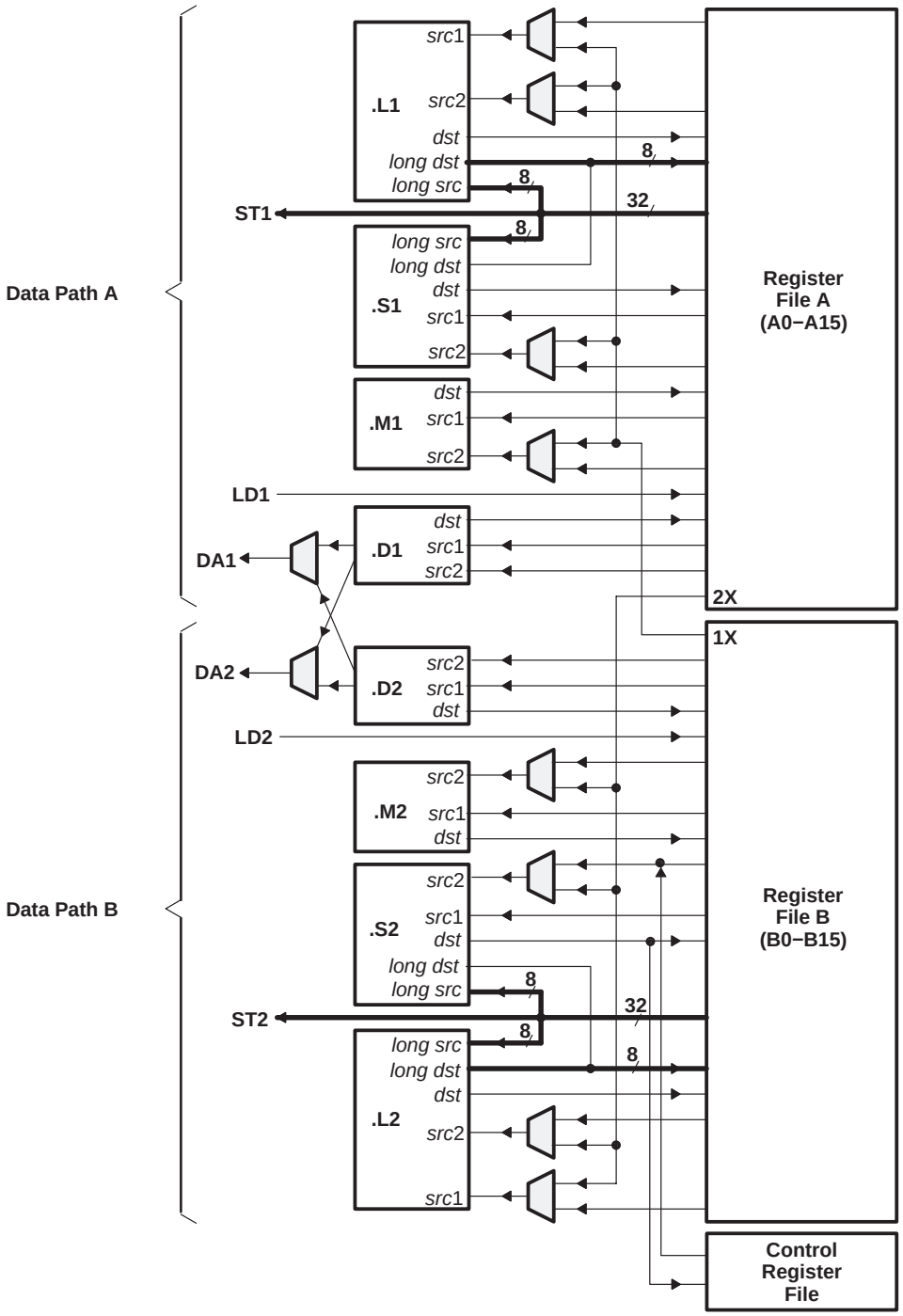

Figure 1. TMS320C62x CPU (DSP Core) Data Paths

memory map summary

Table 2 shows the memory map address ranges of the C6205 device. The C6205 device has the capability of a MAP 0 or MAP 1 memory block configuration. The maps differ in that MAP 0 has *external memory* mapped at address 0x0000 0000 and MAP 1 has *internal memory* mapped at address 0x0000 0000. These memory block configurations are set up at reset by the boot configuration pins (generically called BOOTMODE[4:0]). For the C6205 device, the BOOTMODE configuration is handled, at reset, by the expansion bus module (specifically XD[4:0] pins). For more detailed information on the C6205 device settings, which include the device boot mode configuration at reset and other device-specific configurations, see *TMS320C620x/C670x DSP Boot Modes and Configuration* (literature number SPRU642).

Table 2. TMS320C6205 Memory Map Summary

MEMORY BLOCK DESCRIPTION		BLOCK SIZE (BYTES)	HEX ADDRESS RANGE
MAP 0	**MAP 1**		
External Memory Interface (EMIF) CE0	Internal Program RAM	64K	0000 0000 – 0000 FFFF
EMIF CE0	Reserved	4M – 64K	0001 0000 – 003F FFFF
EMIF CE0	EMIF CE0	12M	0040 0000 – 00FF FFFF
EMIF CE1	EMIF CE0	4M	0100 0000 – 013F FFFF
Internal Program RAM	EMIF CE1	64K	0140 0000 – 0140 FFFF
Reserved	EMIF CE1	4M – 64K	0141 0000 – 017F FFFF
EMIF Registers		256K	0180 0000 – 0183 FFFF
DMA Controller Registers		256K	0184 0000 – 0187 FFFF
Reserved		256K	0188 0000 – 018B FFFF
McBSP 0 Registers		256K	018C 0000 – 018F FFFF
McBSP 1 Registers		256K	0190 0000 – 0193 FFFF
Timer 0 Registers		256K	0194 0000 – 0197 FFFF
Timer 1 Registers		256K	0198 0000 – 019B FFFF
Interrupt Selector Registers		256K	019C 0000 – 019F FFFF
Reserved		256K	01A0 0000 – 01A3 FFFF
PCI Registers		320K	01A4 0000 – 01A8 FFFF
Reserved		6M – 576K	01A9 0000 – 01FF FFFF
EMIF CE2		16M	0200 0000 – 02FF FFFF
EMIF CE3		16M	0300 0000 – 03FF FFFF
Reserved		2G – 64M	0400 0000 – 7FFF FFFF
Internal Data RAM		64K	8000 0000 – 8000 FFFF
Reserved		2G – 64K	8001 0000 – FFFF FFFF

signal groups description

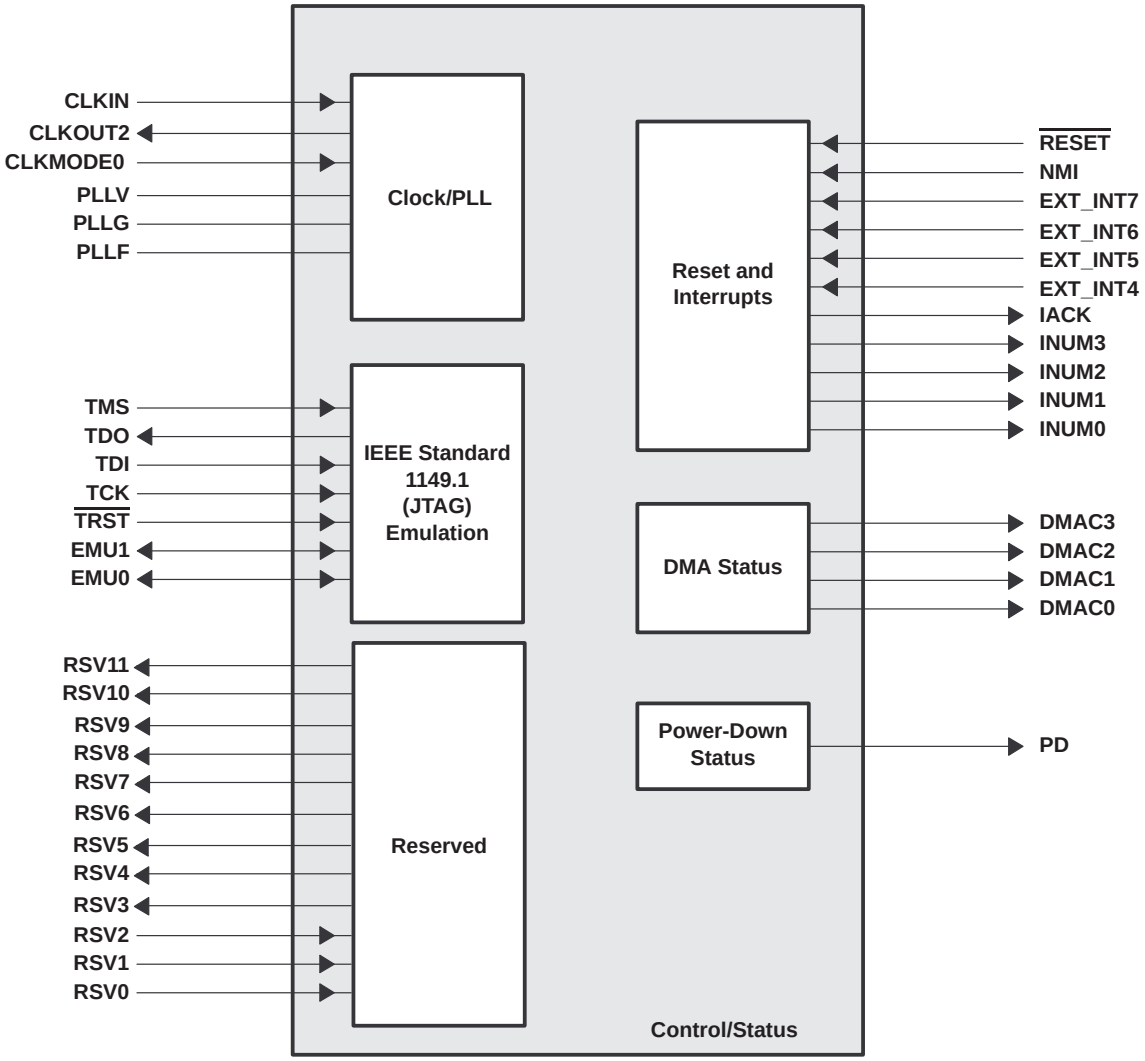

Figure 2. CPU (DSP Core) Signals

signal groups description (continued)

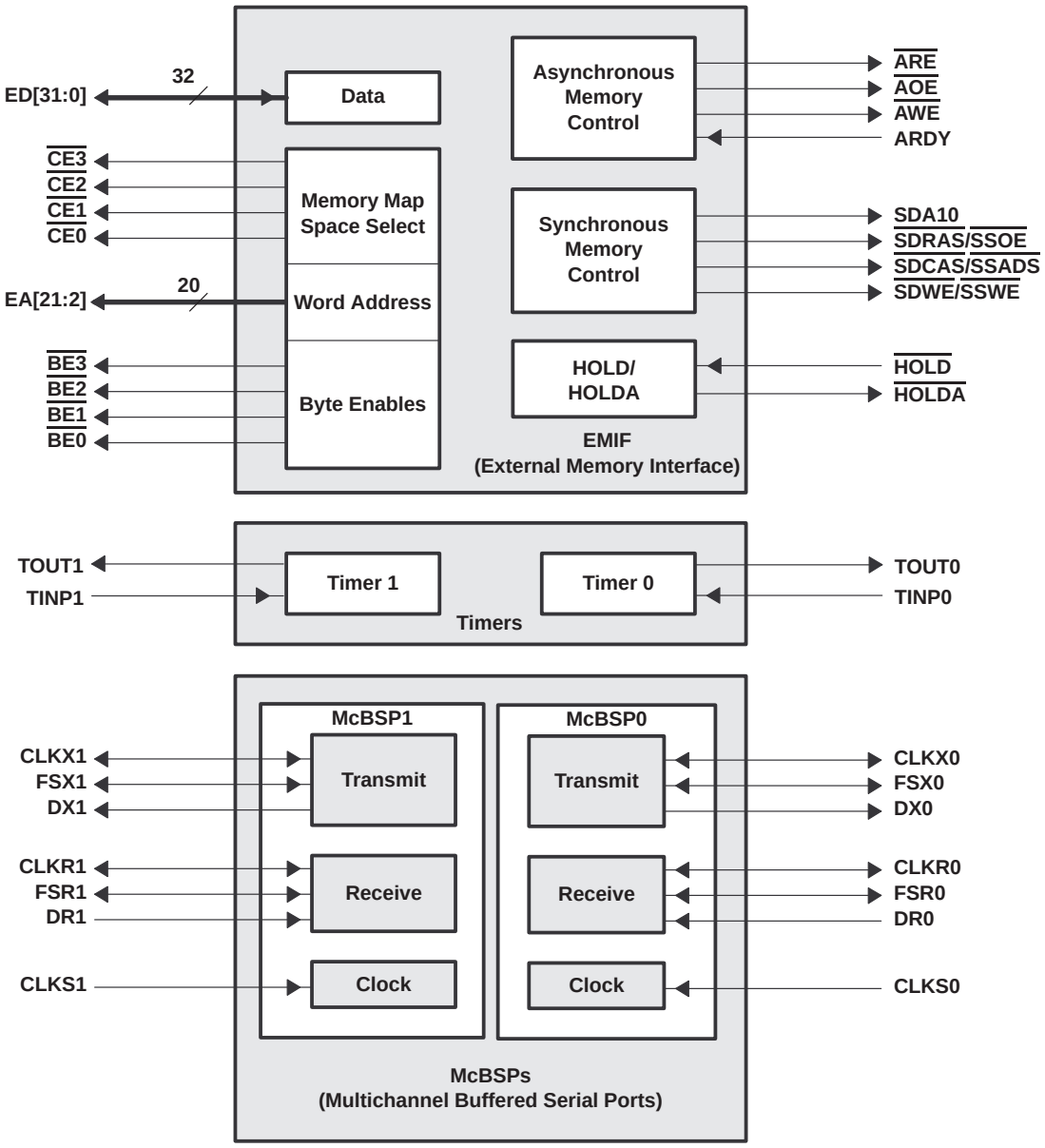

Figure 3. Peripheral Signals

signal groups description (continued)

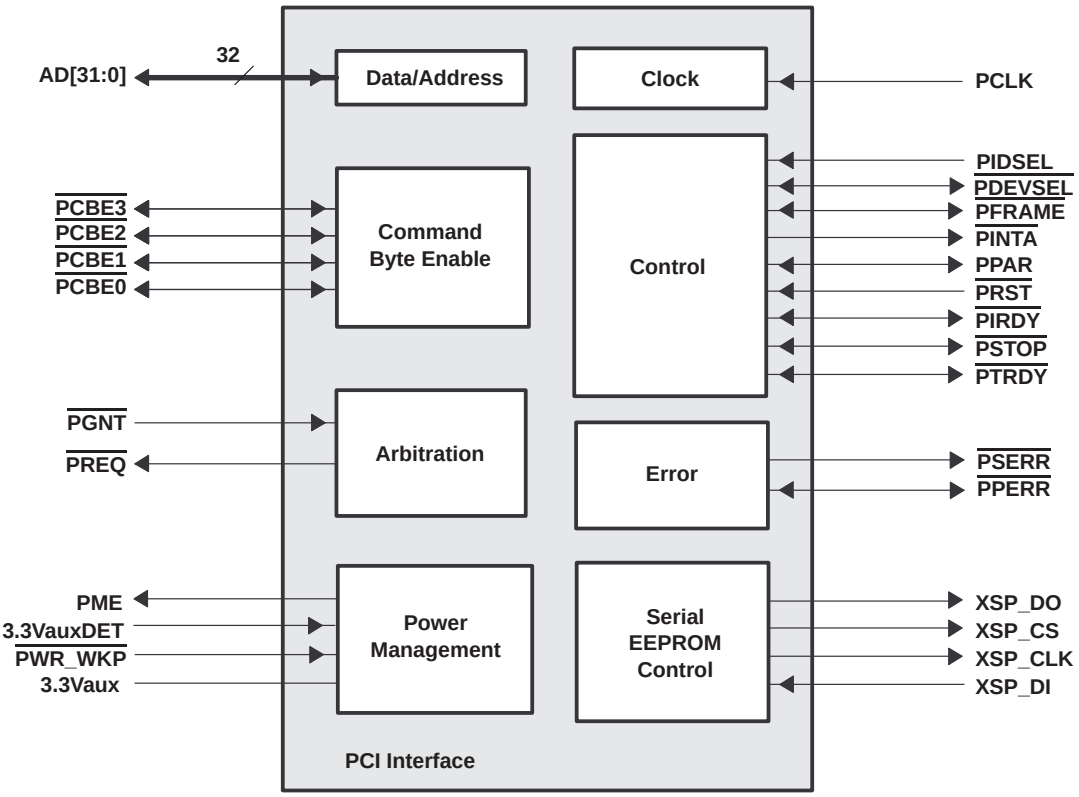

Figure 3. Peripheral Signals (Continued)

Signal Descriptions

SIGNAL NAME	SIGNAL NO.	TYPE†	DESCRIPTION
CLOCK/PLL			
CLKIN	J3	I	Clock Input
CLKOUT2	T19	O	Clock output at half of device speed •Used for synchronous memory interface
CLKMODE0	L3	I	Clock mode select 0 •Selects whether the on-chip PLL is used or bypassed. For more details, see the *Clock PLL* section. •The PLL Multiply Factor is selected at boot configuration. For more details, see the EMIF − Data pin descriptions and the clock PLL section.
PLLV‡	K5	A§	PLL analog V_{CC} connection for the low-pass filter
PLLG‡	L2	A§	PLL analog GND connection for the low-pass filter
PLLF‡	L1	A§	PLL low-pass filter connection to external components and a bypass capacitor
JTAG EMULATION			
TMS	E17	I	JTAG test-port mode select (features an internal pullup)
TDO	D19	O/Z	JTAG test-port data out
TDI	D18	I	JTAG test-port data in (features an internal pullup)
TCK	D17	I	JTAG test-port clock
$\overline{\text{TRST}}$	C19	I	JTAG test-port reset (features an internal pulldown)
EMU1	E18	I/O/Z	Emulation pin 1, pullup with a dedicated 20-kΩ resistor¶
EMU0	F15	I/O/Z	Emulation pin 0, pullup with a dedicated 20-kΩ resistor¶
RESET AND INTERRUPTS			
$\overline{\text{RESET}}$	C3	I	Device reset
NMI	A8	I	Nonmaskable interrupt •Edge-driven (rising edge)
EXT_INT7	B15	I	External interrupts •Edge-driven •Polarity independently selected via the External Interrupt Polarity Register bits (EXTPOL.[3:0])
EXT_INT6	C15		
EXT_INT5	A16		
EXT_INT4	B16		
IACK	A15	O	Interrupt acknowledge for all active interrupts serviced by the CPU
INUM3	F12	O	Active interrupt identification number •Valid during IACK for all active interrupts (not just external) •Encoding order follows the interrupt-service fetch-packet ordering
INUM2	A14		
INUM1	B14		
INUM0	C14		
POWER-DOWN STATUS			
PD	B18	O	Power-down modes 2 or 3 (active if high)

† I = Input, O = Output, Z = High Impedance, S = Supply Voltage, GND = Ground
‡ PLLV, PLLG, and PLLF are not part of external voltage supply or ground. See the *clock PLL* section for information on how to connect these pins.
§ A = Analog Signal (PLL Filter)
¶ For emulation and normal operation, pull up EMU1 and EMU0 with a dedicated 20-kΩ resistor. For boundary scan, pull down EMU1 and EMU0 with a dedicated 20-kΩ resistor.

Signal Descriptions (Continued)

SIGNAL NAME	SIGNAL NO.	TYPE†	DESCRIPTION
PCI INTERFACE			
PCLK	W5	I	PCI input clock
AD31	D2	I/O/Z	PCI Data-Address bus
AD30	E3		
AD29	E2		
AD28	E1		
AD27	F3		
AD26	F5		
AD25	F1		
AD24	G3		
AD23	H3		
AD22	H2		
AD21	J1		
AD20	H1		
AD19	M2		
AD18	M1		
AD17	N2		
AD16	N1		
AD15	T1		
AD14	V2		
AD13	U2		
AD12	U1		
AD11	W3		
AD10	W2		
AD9	V1		
AD8	U4		
AD7	W4		
AD6	U5		
AD5	V5		
AD4	U6		
AD3	V6		
AD2	V3		
AD1	W6		
AD0	U7		
$\overline{\text{PCBE3}}$	G2	I/O/Z	PCI command/byte enable signals
$\overline{\text{PCBE2}}$	M3		
$\overline{\text{PCBE1}}$	T2		
$\overline{\text{PCBE0}}$	V4		

† I = Input, O = Output, Z = High Impedance, S = Supply Voltage, GND = Ground

Signal Descriptions (Continued)

SIGNAL NAME	SIGNAL NO.	TYPE†	DESCRIPTION
PCI INTERFACE (CONTINUED)			
$\overline{\text{PINTA}}$	C1	O/Z	PCI interrupt A
$\overline{\text{PREQ}}$	F2	O/Z	PCI bus request (bus arbitration)
$\overline{\text{PSERR}}$	P5	O/Z	PCI system error
$\overline{\text{PPERR}}$	P2	I/O/Z	PCI parity error
$\overline{\text{PRST}}$	C2	I	PCI reset
$\overline{\text{PDEVSEL}}$	R2	I/O/Z	PCI device select
$\overline{\text{PGNT}}$	D1	I	PCI bus grant (bus arbitration)
$\overline{\text{PFRAME}}$	N5	I/O/Z	PCI frame
$\overline{\text{PIRDY}}$	P1	I/O/Z	PCI initiator ready
PPAR	T3	I/O/Z	PCI parity
PIDSEL	H5	I	PCI initialization device select
$\overline{\text{PSTOP}}$	R1	I/O/Z	PCI stop
$\overline{\text{PTRDY}}$	N3	I/O/Z	PCI target ready
XSP_CLK	C17	O	Serial EEPROM clock
XSP_DI	C18	I	Serial EEPROM data in, pulldown with a dedicated 20-kΩ resistor
XSP_DO	B19	O	Serial EEPROM data out
XSP_CS	C11	O	Serial EEPROM chip select
3.3VauxDET	B1	I	3.3-V auxiliary power supply detect. Used to indicate the presence of 3.3Vaux. A weak pulldown must be implemented to this pin.
3.3Vaux	B2	S	3.3-V auxiliary power supply voltage
PME	D3	O	Power management event
$\overline{\text{PWR_WKP}}$	A2	I	Power wakeup signal
EMIF − CONTROL SIGNALS COMMON TO ALL TYPES OF MEMORY			
$\overline{\text{CE3}}$	V18	O/Z	Memory space enables •Enabled by bits 24 and 25 of the word address •Only one asserted during any external data access
$\overline{\text{CE2}}$	U17		
$\overline{\text{CE1}}$	W18		
$\overline{\text{CE0}}$	V17		
$\overline{\text{BE3}}$	U16	O/Z	Byte-enable control •Decoded from the two lowest bits of the internal address •Byte-write enables for most types of memory •Can be directly connected to SDRAM read and write mask signal (SDQM)
$\overline{\text{BE2}}$	W17		
$\overline{\text{BE1}}$	V16		
$\overline{\text{BE0}}$	W16		
EMIF − ADDRESS			
EA21	V7	O/Z	External address (word address)
EA20	W7		
EA19	U8		
EA18	V8		
EA17	W8		

† I = Input, O = Output, Z = High Impedance, S = Supply Voltage, GND = Ground

Signal Descriptions (Continued)

SIGNAL NAME	SIGNAL NO.	TYPE†	DESCRIPTION
EMIF − ADDRESS (CONTINUED)			
EA16	W9	O/Z	External address (word address)
EA15	V9		
EA14	U9		
EA13	W10		
EA12	V10		
EA11	U10		
EA10	W11		
EA9	V11		
EA8	U11		
EA7	R11		
EA6	W12		
EA5	U12		
EA4	R12		
EA3	W13		
EA2	V13		
EMIF − DATA			
ED31	F14	I/O/Z	External data •Used for transfer of EMIF data •Also controls initialization of DSP modes at reset via pullup/pulldown resistors ED31 - PLL_Conf2 ED27 - PLL_Conf1 ED23 - PLL_Conf0 ED15 - EEPROM autoinitialization ED8 - Endianness ED[7:5] - EEPROM size ED[4:0] - Bootmode
ED30	E19		
ED29	F17		
ED28	G15		
ED27	F18		
ED26	F19		
ED25	G17		
ED24	G18		
ED23	G19		
ED22	H17		
ED21	H18		
ED20	H19		
ED19	J18		
ED18	J19		
ED17	K15		
ED16	K17		
ED15	K18		
ED14	K19		
ED13	L17		
ED12	L18		
ED11	L19		
ED10	M19		
ED9	M18		

† I = Input, O = Output, Z = High Impedance, S = Supply Voltage, GND = Ground

Signal Descriptions (Continued)

SIGNAL NAME	SIGNAL NO.	TYPE†	DESCRIPTION
EMIF − DATA (CONTINUED)			
ED8	M17	I/O/Z	External data
ED7	N19		
ED6	P19		
ED5	N15		
ED4	P18		
ED3	P17		
ED2	R19		
ED1	R18		
ED0	R17		
EMIF − ASYNCHRONOUS MEMORY CONTROL			
$\overline{\text{ARE}}$	U14	O/Z	Asynchronous memory read-enable
$\overline{\text{AOE}}$	W14	O/Z	Asynchronous memory output-enable
$\overline{\text{AWE}}$	V14	O/Z	Asynchronous memory write-enable
ARDY	W15	I	Asynchronous memory ready input
EMIF − SYNCHRONOUS DRAM (SDRAM)/SYNCHRONOUS BURST SRAM (SBSRAM) CONTROL			
SDA10	U19	O/Z	SDRAM address 10 (separate for deactivate command)
$\overline{\text{SDCAS}}$/$\overline{\text{SSADS}}$	V19	O/Z	SDRAM column-address strobe/SBSRAM address strobe
$\overline{\text{SDRAS}}$/$\overline{\text{SSOE}}$	U18	O/Z	SDRAM row-address strobe/SBSRAM output-enable
$\overline{\text{SDWE}}$/$\overline{\text{SSWE}}$	T17	O/Z	SDRAM write-enable/SBSRAM write-enable
EMIF − BUS ARBITRATION			
$\overline{\text{HOLD}}$	P14	I	Hold request from the host
$\overline{\text{HOLDA}}$	V15	O	Hold-request-acknowledge to the host
TIMER 0			
TOUT0	E5	O	Timer 0 or general-purpose output
TINP0	C5	I	Timer 0 or general-purpose input
Timer 1			
TOUT1	A5	O	Timer 1 or general-purpose output
TINP1	B5	I	Timer 1 or general-purpose input
DMA ACTION COMPLETE STATUS			
DMAC3	A17	O	DMA action complete
DMAC2	B17		
DMAC1	C16		
DMAC0	A18		
MULTICHANNEL BUFFERED SERIAL PORT 0 (McBSP0)			
CLKS0	A12	I	External clock source (as opposed to internal)
CLKR0	B9	I/O/Z	Receive clock
CLKX0	C9	I/O/Z	Transmit clock
DR0	A10	I	Receive data
DX0	B10	O/Z	Transmit data
FSR0	E10	I/O/Z	Receive frame sync
FSX0	A9	I/O/Z	Transmit frame sync

† I = Input, O = Output, Z = High Impedance, S = Supply Voltage, GND = Ground

Signal Descriptions (Continued)

SIGNAL NAME	SIGNAL NO.	TYPE†	DESCRIPTION
MULTICHANNEL BUFFERED SERIAL PORT 1 (McBSP1)			
CLKS1	C6	I	External clock source (as opposed to internal)
CLKR1	B6	I/O/Z	Receive clock
CLKX1	E6	I/O/Z	Transmit clock
DR1	A7	I	Receive data
DX1	B7	O/Z	Transmit data
FSR1	C7	I/O/Z	Receive frame sync
FSX1	A6	I/O/Z	Transmit frame sync
RESERVED FOR TEST			
RSV0	C8	I	Reserved for testing, pullup with a dedicated 20-kΩ resistor
RSV1	A4	I	Reserved for testing, pullup with a dedicated 20-kΩ resistor
RSV2	K3	I	Reserved for testing, pullup with a dedicated 20-kΩ resistor
RSV3	L5	O	Reserved (leave unconnected, ***do not*** connect to power or ground)
RSV4	T18	O	Reserved (leave unconnected, ***do not*** connect to power or ground)
RSV5	A3	O	Reserved (leave unconnected, ***do not*** connect to power or ground)
RSV6	B3	O	Reserved (leave unconnected, ***do not*** connect to power or ground)
RSV7	B4	O	Reserved (leave unconnected, ***do not*** connect to power or ground)
RSV8	C4	O	Reserved (leave unconnected, ***do not*** connect to power or ground)
RSV9	K2	O	Reserved (leave unconnected, ***do not*** connect to power or ground)
RSV10	J17	O	Reserved (leave unconnected, ***do not*** connect to power or ground)
RSV11	N18	O	Reserved (leave unconnected, ***do not*** connect to power or ground)
SUPPLY VOLTAGE PINS			
DV_{DD}	B8	S	3.3-V I/O supply voltage
	E7		
	E8		
	E9		
	E11		
	E13		
	H14		
	K14		
	L15		
	M14		
	P15		
	R8		
	R9		
	R10		
	R13		
	R14		
	U15		

† I = Input, O = Output, Z = High Impedance, S = Supply Voltage, GND = Ground

Signal Descriptions (Continued)

SIGNAL NAME	SIGNAL NO.	TYPE†	DESCRIPTION
SUPPLY VOLTAGE PINS (CONTINUED)			
CV_{DD}	B12	S	1.5-V core supply voltage
	E14		
	F9		
	F10		
	G5		
	H15		
	J2		
	J5		
	J15		
	M5		
	M15		
	N17		
	P6		
	P9		
	P12		
	U13		
PCI SUPPLY VOLTAGE PINS			
V_{IOP}	G1	S	3.3/5-V PCI clamp pins
	P3		
	U3		
V_{DDP}	F6	S	3.3-V PCI power supply pins
	J6		
	L6		
	R3		
	R6		
	R7		
GROUND PINS			
V_{SS}	A11	GND	Ground pins
	A13		
	B11		
	B13		
	C10		
	C12		
	C13		
	E12		
	G7		
	G8		
	G9		
	G10		

† I = Input, O = Output, Z = High Impedance, S = Supply Voltage, GND = Ground

Signal Descriptions (Continued)

SIGNAL NAME	SIGNAL NO.	TYPE†	DESCRIPTION
GROUND PINS (CONTINUED)			
V_{SS}	G11	GND	Ground pins
	G12		
	G13		
	H7		
	H8		
	H9		
	H10		
	H11		
	H12		
	H13		
	J7		
	J8		
	J9		
	J10		
	J11		
	J12		
	J13		
	K1		
	K7		
	K8		
	K9		
	K10		
	K11		
	K12		
	K13		
	L7		
	L8		
	L9		
	L10		
	L11		
	L12		
	L13		
	M7		
	M8		
	M9		
	M10		
	M11		
	M12		
	M13		

† I = Input, O = Output, Z = High Impedance, S = Supply Voltage, GND = Ground

Signal Descriptions (Continued)

SIGNAL NAME	SIGNAL NO.	TYPE†	DESCRIPTION
GROUND PINS (CONTINUED)			
V_{SS}	N7	GND	Ground pins
	N8		
	N9		
	N10		
	N11		
	N12		
	N13		
	V12		

† I = Input, O = Output, Z = High Impedance, S = Supply Voltage, GND = Ground

development support

TI offers an extensive line of development tools for the TMS320C6000™ DSP platform, including tools to evaluate the performance of the processors, generate code, develop algorithm implementations, and fully integrate and debug software and hardware modules.

The following products support development of C6000™ DSP-based applications:

Software Development Tools:
Code Composer Studio™ Integrated Development Environment (IDE) including Editor
C/C++/Assembly Code Generation, and Debug plus additional development tools
Scalable, Real-Time Foundation Software (DSP BIOS), which provides the basic run-time target software needed to support any DSP application.

Hardware Development Tools:
Extended Development System (XDS™) Emulator (supports C6000™ DSP multiprocessor system debug)
EVM (Evaluation Module)

The *TMS320 DSP Development Support Reference Guide* (SPRU011) contains information about development-support products for all TMS320™ DSP family member devices, including documentation. See this document for further information on TMS320™ DSP documentation or any TMS320™ DSP support products from Texas Instruments. An additional document, the *TMS320 Third-Party Support Reference Guide* (SPRU052), contains information about TMS320™ DSP-related products from other companies in the industry. To receive TMS320™ DSP literature, contact the Literature Response Center at 800/477-8924.

For a complete listing of development-support tools for the TMS320C6000™ DSP platform, visit the Texas Instruments web site on the Worldwide Web at http://www.ti.com uniform resource locator (URL) and select “Find Development Tools”. For device-specific tools, under “Semiconductor Products” select “Digital Signal Processors”, choose a product family, and select the particular DSP device. For information on pricing and availability, contact the nearest TI field sales office or authorized distributor.

Code Composer Studio, XDS, and TMS320 are trademarks of Texas Instruments.

device and development-support tool nomenclature

To designate the stages in the product development cycle, TI assigns prefixes to the part numbers of all DSP devices and support tools. Each DSP commercial family member has one of three prefixes: TMX, TMP, or TMS (i.e., **TMS**320C6205GHK200). Texas Instruments recommends two of three possible prefix designators for support tools: TMDX and TMDS. These prefixes represent evolutionary stages of product development from engineering prototypes (TMX/TMDX) through fully qualified production devices/tools (TMS/TMDS).

Device development evolutionary flow:

TMX Experimental device that is not necessarily representative of the final device's electrical specifications

TMP Final silicon die that conforms to the device's electrical specifications but has not completed quality and reliability verification

TMS Fully qualified production device

Support tool development evolutionary flow:

TMDX Development-support product that has not yet completed Texas Instruments internal qualification testing.

TMDS Fully qualified development-support product

TMX and TMP devices and TMDX development-support tools are shipped against the following disclaimer:

"Developmental product is intended for internal evaluation purposes."

TMS devices and TMDS development-support tools have been characterized fully, and the quality and reliability of the device have been demonstrated fully. TI's standard warranty applies.

Predictions show that prototype devices (TMX or TMP) have a greater failure rate than the standard production devices. Texas Instruments recommends that these devices not be used in any production system because their expected end-use failure rate still is undefined. Only qualified production devices are to be used.

TI device nomenclature also includes a suffix with the device family name. This suffix indicates the package type (for example, GHK), the temperature range (for example, blank is the default commercial temperature range), and the device speed range in megahertz (for example, -200 is 200 MHz).

The ZHK package, like the GHK package, is a 288-ball plastic BGA *only* with Pb-free balls.For device part numbers and further ordering information for TMS320C6205 in the GHK and ZHK package types, see the TI website (http://www.ti.com) or contact your TI sales representative.

device and development-support tool nomenclature (continued)
‡

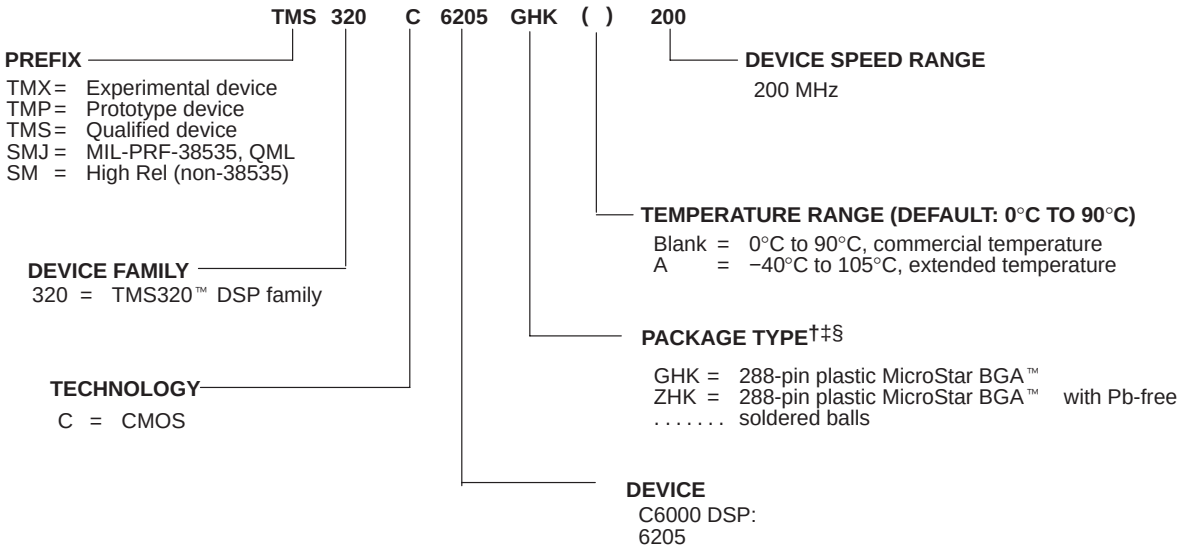

† BGA = Ball Grid Array
‡ For actual device part numbers (P/Ns) and ordering information, see the Mechanical Data section of this document or the TI website (www.ti.com).
§ The ZHK mechanical package designator represents the version of the GHK with Pb−Free soldered balls.

Figure 4. TMS320C6000™ DSP Platform Device Nomenclature (Including the TMS320C6205 Device)

documentation support

Extensive documentation supports all TMS320™ DSP family devices from product announcement through applications development. The types of documentation available include: data sheets, such as this document, with design specifications; complete user's reference guides for all devices and tools; technical briefs; development-support tools; on-line help; and hardware and software applications. The following is a brief, descriptive list of support documentation specific to the C6000™ DSP devices:

The *TMS320C6000 CPU and Instruction Set Reference Guide* (literature number SPRU189) describes the C6000™ DSP core (CPU) architecture, instruction set, pipeline, and associated interrupts.

The *TMS320C6000 DSP Peripherals Overview Reference Guide* (literature number SPRU190) briefly describes the functionality of the peripherals available on the C6000™ DSP platform of devices, such as the 64-/32-/16-bit external memory interfaces (EMIFs), 32-/16-bit host-port interfaces (HPIs), multichannel buffered serial ports (McBSPs), direct memory access (DMA), enhanced direct-memory-access (EDMA) controller, expansion bus (XB), peripheral component interconnect (PCI), clocking and phase-locked loop (PLL); and power-down modes.

The *TMS320C6000 Technical Brief* (literature number SPRU197) gives an introduction to the C62x™/C67x™ devices, associated development tools, and third-party support.

The tools support documentation is electronically available within the Code Composer Studio™ Integrated Development Environment (IDE). For a complete listing of the latest C6000™ DSP documentation, visit the Texas Instruments web site on the Worldwide Web at http://www.ti.com uniform resource locator (URL).

See the Worldwide Web URL for the new *How to Begin Development with the TMS320C6205 DSP* application report (literature number SPRA596) which describes the functionalities unique to the C6205 device, especially the peripheral component interconnect (PCI) module interface.

C62x and C67x are trademarks of Texas Instruments.

clock PLL

Most of the internal C6205 clocks are generated from a single source through the CLKIN pin. This source clock either drives the PLL, which multiplies the source clock in frequency to generate the internal CPU clock, or bypasses the PLL to become the internal CPU clock.

To use the PLL to generate the CPU clock, the external PLL filter circuit must be properly designed. Figure 5, Table 3, and Table 4 show the external PLL circuitry for either x1 (PLL bypass) or x4 PLL multiply modes. Figure 6 shows the external PLL circuitry for a system with ONLY x1 (PLL bypass) mode.

To minimize the clock jitter, a single clean power supply should power both the C6205 device and the external clock oscillator circuit. Noise coupling into PLLF directly impacts PLL clock jitter. The minimum CLKIN rise and fall times should also be observed. For the input clock timing requirements, see the *input and output clocks* electricals section.

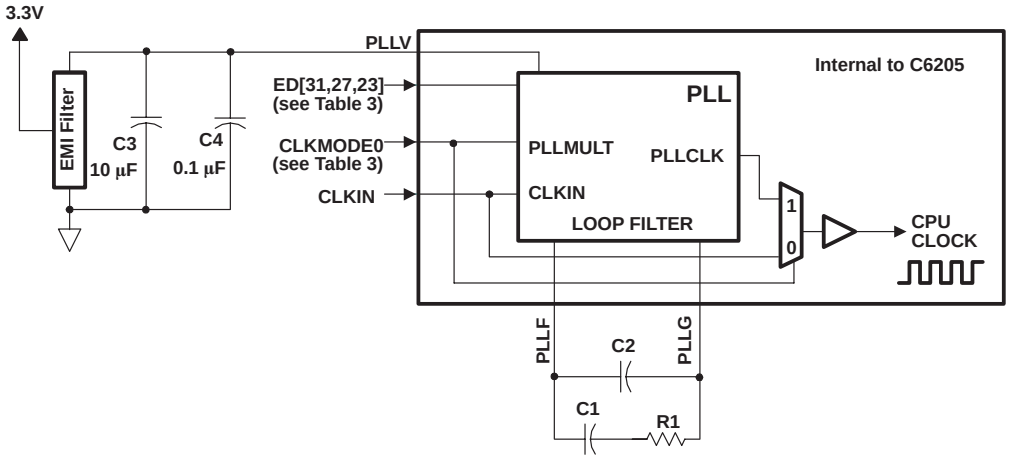

NOTES: A. Keep the lead length and the number of vias between pin PLLF, pin PLLG, R1, C1, and C2 to a minimum. In addition, place all PLL components (R1, C1, C2, C3, C4, and EMI Filter) as close to the C6000™ DSP device as possible. Best performance is achieved with the PLL components on a single side of the board without jumpers, switches, or components other than the ones shown.

B. For reduced PLL jitter, maximize the spacing between switching signals and the PLL external components (R1, C1, C2, C3, C4, and the EMI Filter).

C. The 3.3-V supply for the EMI filter must be from the same 3.3-V power plane supplying the I/O voltage, DV_{DD}.

D. EMI filter manufacturer: TDK part number ACF451832-333, 223, 153, 103. Panasonic part number EXCCET103U.

E. At power up, the PLL requires a falling edge of RESET to initialize the PLL engine. It may be necessary to toggle reset in order to establish proper PLL operation.

Figure 5. External PLL Circuitry for Either PLL Multiply Modes or x1 (Bypass) Mode

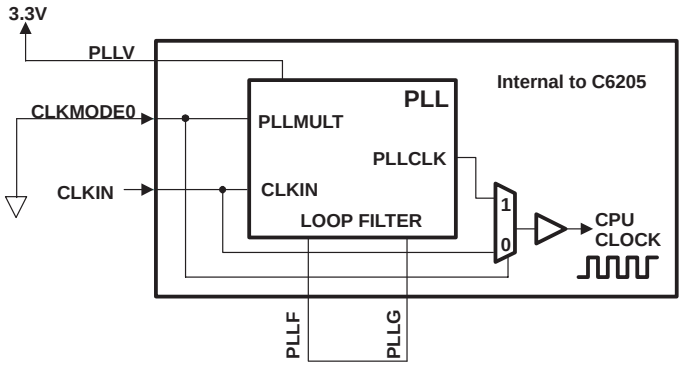

NOTES: A. For a system with ONLY PLL x1 (bypass) mode, short the PLLF to PLLG.

B. The 3.3-V supply for PLLV must be from the same 3.3-V power plane supplying the I/O voltage, DV_{DD}.

Figure 6. External PLL Circuitry for x1 (Bypass) PLL Mode Only

clock PLL (continued)

Table 3. C6205 PLL Multiply Modes and x1 (Bypass) Options

CLKMODE0†	ED[31]‡	ED[27]‡	ED[23]‡	PLL MULTIPLY FACTORS	CPU CLOCK FREQ f(CPU clock)
0	X	X	X	x1 (Bypass)	$1 \times f_{(CLKIN)}$
1	0	0	0	x1 (Bypass)	$1 \times f_{(CLKIN)}$
1	0	0	1	x4	$4 \times f_{(CLKIN)}$
1	0	1	0	x8	$8 \times f_{(CLKIN)}$
1	0	1	1	x10	$10 \times f_{(CLKIN)}$
1	1	0	0	x6	$6 \times f_{(CLKIN)}$
1	1	0	1	x9	$9 \times f_{(CLKIN)}$
1	1	1	0	x7	$7 \times f_{(CLKIN)}$
1	1	1	1	x11	$11 \times f_{(CLKIN)}$

† CLKMODE0 equal to 0 denotes on-chip PLL bypassed
CLKMODE0 equal to 1 denotes on-chip PLL used, except when configuration bits (ED[31], ED[27], and ED[23]) are 0 at device reset.

‡ ED[31], ED[27], and ED[23] are the on-chip PLL configuration bits that are latched during device reset, along with the other boot configuration bits ED[31:0].

Table 4. C6205 PLL Component Selection Table§

CLKMODE	CLKIN RANGE (MHz)	CPU CLOCK FREQUENCY (CLKOUT1) RANGE (MHz)	CLKOUT2 RANGE (MHz)	R1 [±1%] (Ω)	C1 [±10%] (nF)	C2 [±10%] (pF)	TYPICAL LOCK TIME (μs)
x4	32.5−50	130−200	65−100	60.4	27	560	75
x6	21.7−33.3						
x7	18.6−28.6						
x8	16.3−25						
x9	14.4−22.2						
x10	13−20						
x11	11.8−18.2						

§ Under some operating conditions, the maximum PLL lock time may vary as much as 150% from the specified typical value. For example, if the typical lock time is specified as 100 μs, the maximum value may be as long as 250 μs.

power-down mode logic

Figure 7 shows the power-down mode logic on the C6205.

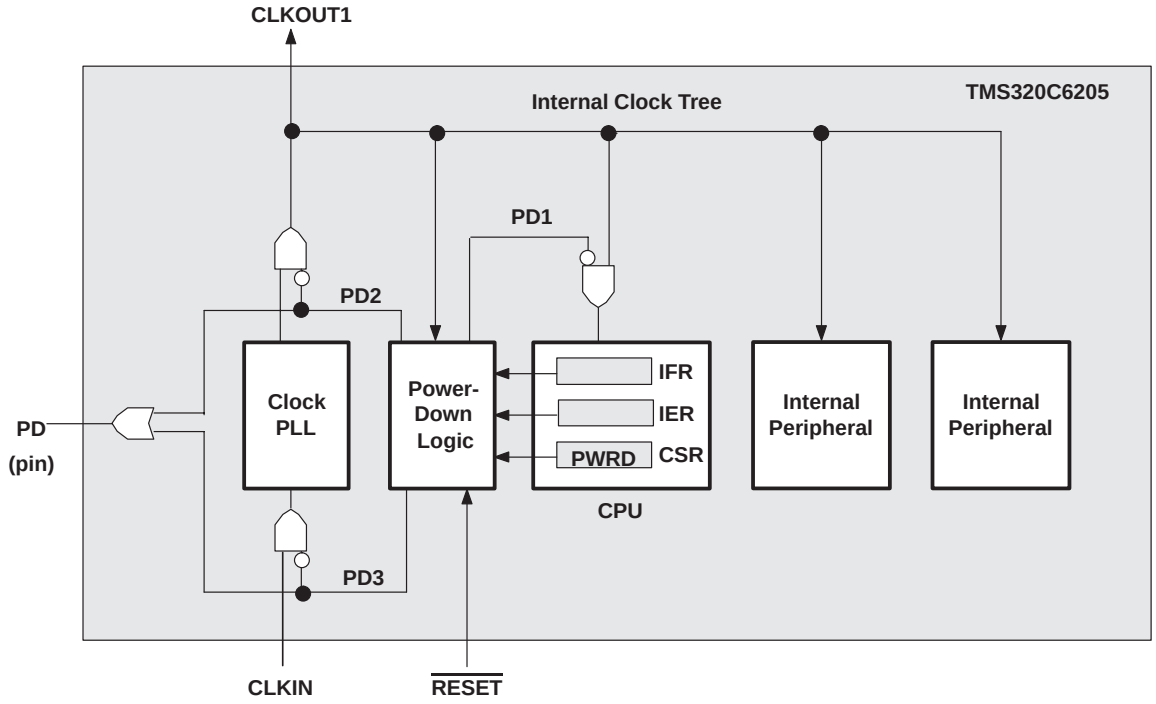

Figure 7. Power-Down Mode Logic†

triggering, wake-up, and effects

The power-down modes and their wake-up methods are programmed by setting the PWRD field (bits 15−10) of the control status register (CSR). The PWRD field of the CSR is shown in Figure 8 and described in Table 5. When writing to the CSR, all bits of the PWRD field should be set at the same time. Logic 0 should be used when “writing” to the reserved bit (bit 15) of the PWRD field. The CSR is discussed in detail in the *TMS320C6000 CPU and Instruction Set Reference Guide* (literature number SPRU189).

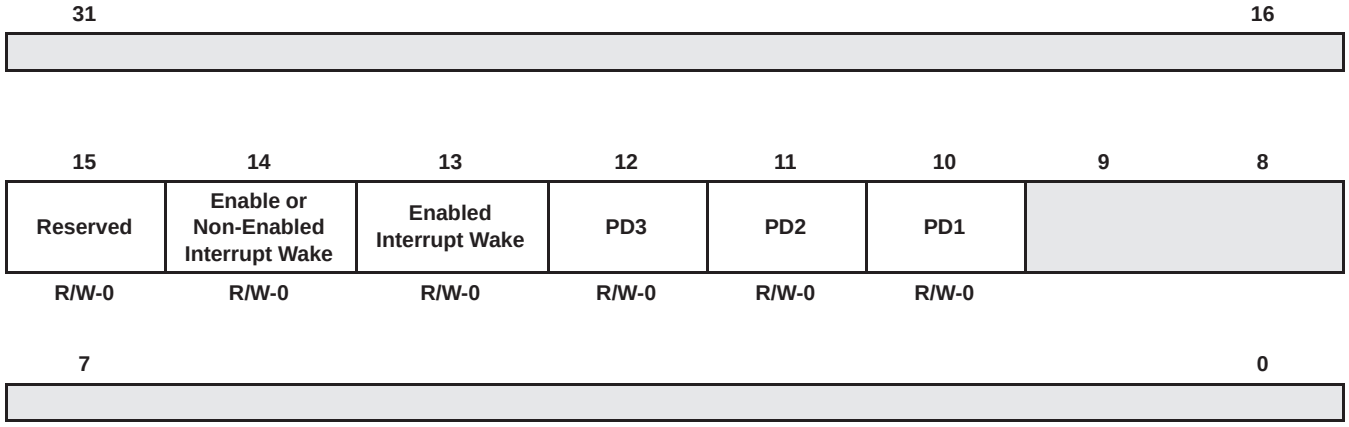

Legend: R/W−x = Read/write reset value

NOTE: The shadowed bits are not part of the power-down logic discussion and therefore are not covered here. For information on these other bit fields in the CSR register, see the *TMS320C6000 CPU and Instruction Set Reference Guide* (literature number SPRU189).

Figure 8. PWRD Field of the CSR Register

Power-down mode PD1 takes effect eight to nine clock cycles after the instruction that sets the PWRD bits in the CSR.

If PD1 mode is terminated by a non-enabled interrupt, the program execution returns to the instruction where PD1 took effect. If PD1 mode is terminated by an enabled interrupt, the interrupt service routine will be executed first, then the program execution returns to the instruction where PD1 took effect. The GIE bit in CSR and the NMIE bit in the interrupt enable register (IER) must also be set in order for the interrupt service routine to execute; otherwise, execution returns to the instruction where PD1 took effect upon PD1 mode termination by an enabled interrupt.

PD2 and PD3 modes can only be aborted by device reset. Table 5 summarizes all the power-down modes.

Table 5. Characteristics of the Power-Down Modes

PRWD FIELD (BITS 15−10)	POWER-DOWN MODE	WAKE-UP METHOD	EFFECT ON CHIP'S OPERATION
000000	No power-down	—	—
001001	PD1	Wake by an enabled interrupt	CPU halted (except for the interrupt logic) Power-down mode blocks the internal clock inputs at the boundary of the CPU, preventing most of the CPU's logic from switching. During PD1, DMA transactions can proceed between peripherals and internal memory.
010001	PD1	Wake by an enabled or non-enabled interrupt	
011010	PD2†	Wake by a device reset	Output clock from PLL is halted, stopping the internal clock structure from switching and resulting in the entire chip being halted. All register and internal RAM contents are preserved. All functional I/O "freeze" in the last state when the PLL clock is turned off.
011100	PD3†	Wake by a device reset	Input clock to the PLL stops generating clocks. All register and internal RAM contents are preserved. All functional I/O "freeze" in the last state when the PLL clock is turned off. Following reset, the PLL needs time to re-lock, just as it does following power-up. Wake-up from PD3 takes longer than wake-up from PD2 because the PLL needs to be re-locked.
All others	Reserved	—	—

† When entering PD2 and PD3, all functional I/O remains in the previous state. However, for peripherals which are asynchronous in nature or peripherals with an external clock source, output signals may transition in response to stimulus on the inputs. Under these conditions, peripherals will not operate according to specifications.

power-supply sequencing

TI DSPs do not require specific power sequencing between the core supply and the I/O supply. However, systems should be designed to ensure that neither supply is powered up for extended periods of time if the other supply is below the proper operating voltage.

system-level design considerations

System-level design considerations, such as bus contention, may require supply sequencing to be implemented. In this case, the core supply should be powered up at the same time as, or prior to (and powered down after), the I/O buffers. This is to ensure that the I/O buffers receive valid inputs from the core before the output buffers are powered up, thus, preventing bus contention with other chips on the board.

power-supply design considerations

For systems using the C6000™ DSP platform of devices, the core supply may be required to provide in excess of 2 A per DSP until the I/O supply is powered up. This extra current condition is a result of uninitialized logic within the DSP(s) and is corrected once the CPU sees an internal clock pulse. With the PLL enabled, as the I/O supply is powered on, a clock pulse is produced stopping the extra current draw from the supply. With the PLL disabled, as many as five external clock cycle pulses may be required to stop this extra current draw. A normal current state returns once the I/O power supply is turned on and the CPU sees a clock pulse. Decreasing the amount of time between the core supply power up and the I/O supply power up can minimize the effects of this current draw.

A dual-power supply with simultaneous sequencing, such as that available with TPS563xx controllers or PT69xx plug-in power modules, can be used to eliminate the delay between core and I/O power up [see the *Using the TPS56300 to Power DSPs* application report (literature number SLVA088)]. A Schottky diode can also be used to tie the core rail to the I/O rail, effectively pulling up the I/O power supply to a level that can help initialize the logic within the DSP.

Core and I/O supply voltage regulators should be located close to the DSP (or DSP array) to minimize inductance and resistance in the power delivery path. Additionally, when designing for high-performance applications utilizing the C6000™ platform of DSPs, the PC board should include separate power planes for core, I/O, and ground, all bypassed with high-quality low-ESL/ESR capacitors.

absolute maximum ratings over operating case temperature range (unless otherwise noted)†

Supply voltage ranges: CV_{DD} (see Note 1) . . . . . − 0.3 V to 2.3 V
DV_{DD} (see Note 1) . . . . . −0.3 V to 4 V
(PCI), V_{IOP} (see Note 1) . . . . . −0.5 V to 5.5 V
(PCI), V_{DDP} (see Note 1) . . . . . −0.3 V to 4 V
Input voltage ranges: (except PCI), V_I . . . . . −0.3 V to 4 V
(PCI), V_{IP} . . . . . −0.5 V to V_{IOP} + 0.5 V
Output voltage ranges: (except PCI), V_O . . . . . −0.3 V to 4 V
(PCI), V_{OP} . . . . . −0.5 V to V_{IOP} + 0.5 V
Operating case temperature range, T_C . . . . . 0°C to 90°C
Storage temperature range, T_{stg} . . . . . −65°C to 150°C

† Stresses beyond those listed under “absolute maximum ratings” may cause permanent damage to the device. These are stress ratings only, and functional operation of the device at these or any other conditions beyond those indicated under “recommended operating conditions” is not implied. Exposure to absolute-maximum-rated conditions for extended periods may affect device reliability.

NOTE 1: All voltage values are with respect to V_{SS}.

recommended operating conditions

		MIN	NOM	MAX	UNIT
CV_{DD}	Supply voltage, Core	1.43	1.5	1.57	V
DV_{DD}	Supply voltage, I/O	3.14	3.3	3.46	V
V_{SS}	Supply ground	0	0	0	V
V_{IH}	High-level input voltage	2			V
V_{IL}	Low-level input voltage			0.8	V
I_{OH}	High-level output current			−8	mA
I_{OL}	Low-level output current			8	mA
T_C	Operating case temperature	0		90	°C

recommended operating conditions (PCI only)

			OPERATION	MIN	NOM	MAX	UNIT
V_{DDP}	3.3-V PCI power supply voltage‡		3.3 V	3	3.3	3.6	V
V_{IOP}	3.3/5-V PCI Clamp voltage (PCI)		3.3 V	3	3.3	3.6	V
			5 V	4.75	5	5.25	V
V_{IP}	Input voltage (PCI)		3.3 V	−0.5		V_{IOP} + 0.5	V
			5 V	−0.5		V_{IOP} + 0.5	
V_{IHP}	High-level input voltage (PCI)	CMOS-compatible	3.3 V	$0.5V_{IOP}$		V_{IOP} + 0.5	V
			5 V	2		V_{IOP} + 0.5	
V_{ILP}	Low-level input voltage (PCI)	CMOS-compatible	3.3 V	−0.5		$0.3V_{IOP}$	V
			5 V	−0.5		0.8	

‡ The 3.3-V PCI power supply voltage should follow similar sequencing as the I/O buffers supply voltage, see the power-supply sequencing section of this data sheet.

electrical characteristics over recommended ranges of supply voltage and operating case temperature (unless otherwise noted)

PARAMETER		TEST CONDITIONS		MIN	TYP	MAX	UNIT
V_{OH}	High-level output voltage (except PCI)	DV_{DD} = MIN,	I_{OH} = MAX	2.4			V
V_{OL}	Low-level output voltage (except PCI)	DV_{DD} = MIN,	I_{OL} = MAX			0.6	V
I_I	Input current†	$V_I = V_{SS}$ to DV_{DD}				±10	µA
I_{OZ}	Off-state output current	$V_O = DV_{DD}$ or 0 V				±10	µA
I_{DD2V}	Supply current, CPU + CPU memory access‡	CV_{DD} = NOM,	CPU clock = 200 MHz		290		mA
I_{DD2V}	Supply current, peripherals‡	CV_{DD} = NOM,	CPU clock = 200 MHz		240		mA
I_{DD3V}	Supply current, I/O pins‡	DV_{DD} = NOM,	CPU clock = 200 MHz		100		mA
C_i	Input capacitance					10	pF
C_o	Output capacitance					10	pF

† TMS and TDI are not included due to internal pullups. $\overline{TRST}$ is not included due to internal pulldown.
‡ Measured with average activity (50% high/50% low power). For more details on CPU, peripheral, and I/O activity, see the *TMS320C6000 Power Consumption Summary* application report (literature number SPRA486).

electrical characteristics over recommended ranges of supply voltage and operating case temperature (unless otherwise noted) (PCI only)

PARAMETER		PCI SIDE	TEST CONDITIONS AND OPERATION		MIN	MAX	UNIT
V_{OHP}	High-level output voltage (PCI)	All PCI pins	I_{OHP} = −0.5 mA	3.3 V	$0.9V_{IOP}$§		V
			I_{OHP} = −2 mA	5 V	2.4		
V_{OLP}	Low-level output voltage (PCI)	All PCI pins	I_{OLP} = 1.5 mA	3.3 V		$0.1V_{IOP}$§	V
			I_{OLP} = 6 mA	5 V		0.55	
I_{ILP}	Low-level input leakage current (PCI)	All PCI pins§	$0 < V_{IP} < V_{IOP}$	3.3 V		±10	µA
			V_{IP} = 0.5 V	5 V		−70	
I_{IHP}	High-level input leakage current (PCI)	All PCI pins§	V_{IP} = 2.7 V	5 V		70	µA

§ Input leakage currents include Hi-Z output leakage for all bidirectional buffers with 3-state outputs.

PARAMETER MEASUREMENT INFORMATION

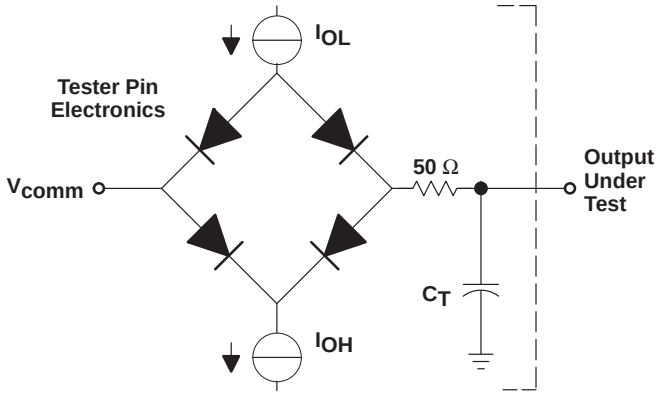

Where: I_{OL} = 2 mA
I_{OH} = 2 mA
V_{comm} = 0.8 V
C_T = 15−30-pF typical load-circuit capacitance

Figure 9. Test Load Circuit for AC Timing Measurements

signal transition levels

All input and output timing parameters are referenced to 1.5 V for both “0” and “1” logic levels.

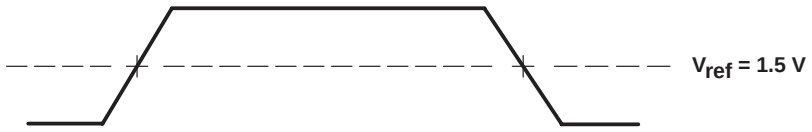

Figure 10. Input and Output Voltage Reference Levels for ac Timing Measurements

All rise and fall transition timing parameters are referenced to V_{IL} MAX and V_{IH} MIN for input clocks, V_{OL} MAX and V_{OH} MIN for output clocks, V_{ILP} MAX and V_{IHP} MIN for PCI input clocks, and V_{OLP} MAX and V_{OHP} MIN for PCI output clocks.

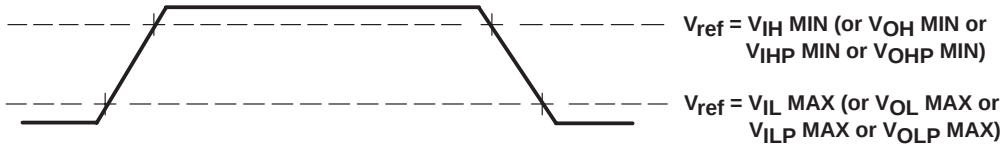

Figure 11. Rise and Fall Transition Time Voltage Reference Levels

INPUT AND OUTPUT CLOCKS

timing requirements for CLKIN†‡§ (see Figure 12)

NO.			−200				UNIT
			PLL mode x4, x6, x7, x8, x9, x10, x11		PLL mode x1		
			MIN	MAX	MIN	MAX	
1	$t_{c(CLKIN)}$	Cycle time, CLKIN	5 * M		5		ns
2	$t_{w(CLKINH)}$	Pulse duration, CLKIN high	0.4C		0.45C		ns
3	$t_{w(CLKINL)}$	Pulse duration, CLKIN low	0.4C		0.45C		ns
4	$t_{t(CLKIN)}$	Transition time, CLKIN		5		0.6	ns

† The reference points for the rise and fall transitions are measured at V_{IL} MAX and V_{IH} MIN.
‡ M = the PLL multiplier factor (x4, x6, x7, x8, x9, x10, or x11). For more details, see the clock PLL section of this data sheet.
§ C = CLKIN cycle time in ns. For example, when CLKIN frequency is 50 MHz, use C = 20 ns.

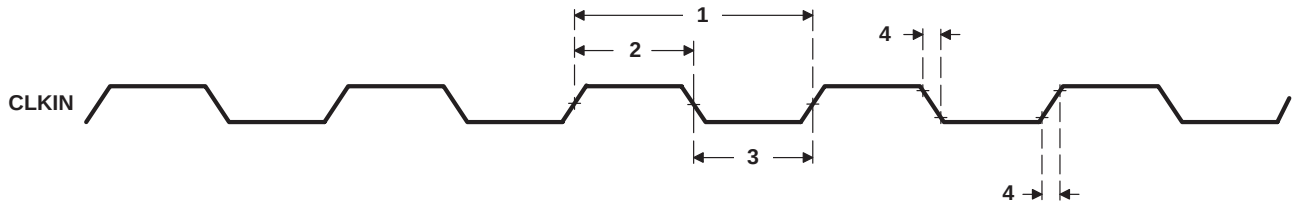

Figure 12. CLKIN Timings

timing requirements for PCLKIN¶ (see Figure 13)

NO.			−200		UNIT
			MIN	MAX	
1	$t_{c(PCLK)}$	Cycle time, PCLK	30		ns
2	$t_{w(PCLKH)}$	Pulse duration, PCLK high	11		ns
3	$t_{w(PCLKL)}$	Pulse duration, PCLK low	11		ns
4	$t_{sr(PCLK)}$	Δv/Δt slew rate, PCLK	1	4	V/ns

¶ When the 5-V PCI clamp is used, the reference points for the rise and fall transitions are measured V_{ILP} MAX and V_{IHP} MIN for 5 V operation. When the 3.3-V PCI clamp is used, the reference points for the rise and fall transitions are measured at V_{ILP} MAX and V_{IHP} MIN for 3.3 V operation.

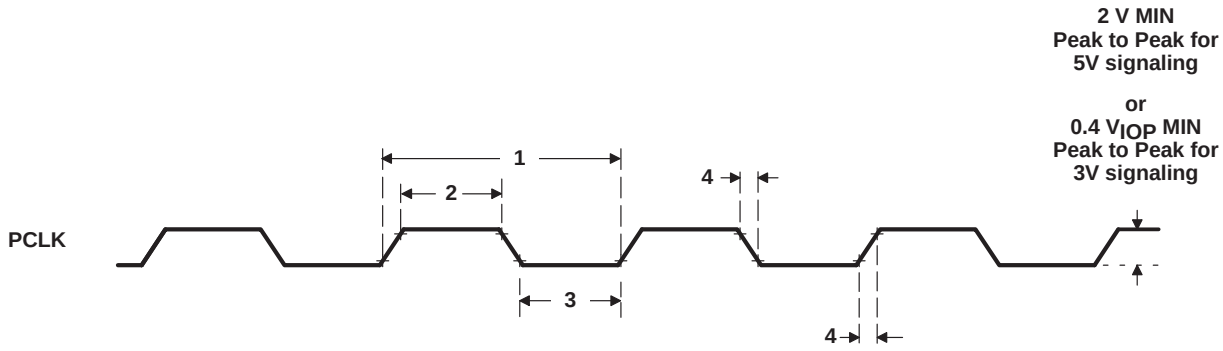

Figure 13. PCLK Timings

INPUT AND OUTPUT CLOCKS (CONTINUED)

switching characteristics over recommended operating conditions for CLKOUT2†‡ (see Figure 14)

NO.	PARAMETER		−200		UNIT
			MIN	MAX	
2	$t_{w(CKO2H)}$	Pulse duration, CLKOUT2 high	P − 0.7	P + 0.7	ns
3	$t_{w(CKO2L)}$	Pulse duration, CLKOUT2 low	P − 0.7	P + 0.7	ns
4	$t_{t(CKO2)}$	Transition time, CLKOUT2		0.6	ns

† The reference points for the rise and fall transitions are measured at V_{OL} MAX and V_{OH} MIN.
‡ P = 1/CPU clock frequency in nanoseconds (ns).

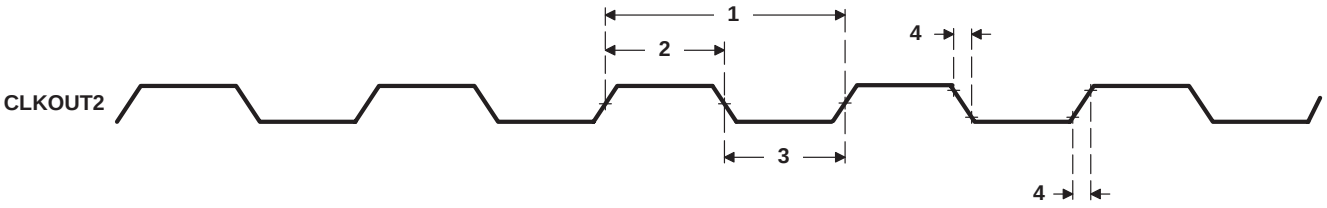

Figure 14. CLKOUT2 Timings

ASYNCHRONOUS MEMORY TIMING

timing requirements for asynchronous memory cycles[†‡§¶] (see Figure 15 − Figure 18)

NO.			−200		UNIT
			MIN	MAX	
3	$t_{su(EDV-AREH)}$	Setup time, EDx valid before $\overline{ARE}$ high	1.5		ns
4	$t_{h(AREH-EDV)}$	Hold time, EDx valid after $\overline{ARE}$ high	3.5		ns
6	$t_{su(ARDYH-AREL)}$	Setup time, ARDY high before $\overline{ARE}$ low	−[(RST − 3) * P − 6]		ns
7	$t_{h(AREL-ARDYH)}$	Hold time, ARDY high after $\overline{ARE}$ low	(RST − 3) * P + 3		ns
9	$t_{su(ARDYL-AREL)}$	Setup time, ARDY low before $\overline{ARE}$ low	−[(RST − 3) * P − 6]		ns
10	$t_{h(AREL-ARDYL)}$	Hold time, ARDY low after $\overline{ARE}$ low	(RST − 3) * P + 3		ns
11	$t_{w(ARDYH)}$	Pulse width, ARDY high	2P		ns
15	$t_{su(ARDYH-AWEL)}$	Setup time, ARDY high before $\overline{AWE}$ low	−[(WST − 3) * P − 6]		ns
16	$t_{h(AWEL-ARDYH)}$	Hold time, ARDY high after $\overline{AWE}$ low	(WST − 3) * P + 3		ns
18	$t_{su(ARDYL-AWEL)}$	Setup time, ARDY low before $\overline{AWE}$ low	−[(WST − 3) * P − 6]		ns
19	$t_{h(AWEL-ARDYL)}$	Hold time, ARDY low after $\overline{AWE}$ low	(WST − 3) * P + 3		ns

† To ensure data setup time, simply program the strobe width wide enough. ARDY is internally synchronized. If ARDY does meet setup or hold time, it may be recognized in the current cycle or the next cycle. Thus, ARDY can be an asynchronous input.
‡ RS = Read Setup, RST = Read Strobe, RH = Read Hold, WS = Write Setup, WST = Write Strobe, WH = Write Hold. These parameters are programmed via the EMIF CE space control registers.
§ P = 1/CPU clock frequency in ns. For example, when running parts at 200 MHz, use P = 5 ns.
¶ The sum of RS and RST (or WS and WST) must be a minimum of 4 in order to use ARDY input to extend strobe width.

switching characteristics over recommended operating conditions for asynchronous memory cycles[‡§¶#] (see Figure 15 − Figure 18)

NO.	PARAMETER		−200			UNIT
			MIN	TYP	MAX	
1	$t_{osu(SELV-AREL)}$	Output setup time, select signals valid to $\overline{ARE}$ low	RS * P − 2			ns
2	$t_{oh(AREH-SELIV)}$	Output hold time, $\overline{ARE}$ high to select signals invalid	RH * P − 2			ns
5	$t_{w(AREL)}$	Pulse width, $\overline{ARE}$ low		RST * P		ns
8	$t_{d(ARDYH-AREH)}$	Delay time, ARDY high to $\overline{ARE}$ high	3P		4P + 5	ns
12	$t_{osu(SELV-AWEL)}$	Output setup time, select signals valid to $\overline{AWE}$ low	WS * P − 2			ns
13	$t_{oh(AWEH-SELIV)}$	Output hold time, $\overline{AWE}$ high to select signals invalid	WH * P − 2			ns
14	$t_{w(AWEL)}$	Pulse width, $\overline{AWE}$ low		WST * P		ns
17	$t_{d(ARDYH-AWEH)}$	Delay time, ARDY high to $\overline{AWE}$ high	3P		4P + 5	ns

‡ RS = Read Setup, RST = Read Strobe, RH = Read Hold, WS = Write Setup, WST = Write Strobe, WH = Write Hold. These parameters are programmed via the EMIF CE space control registers.
§ P = 1/CPU clock frequency in ns. For example, when running parts at 200 MHz, use P = 5 ns.
¶ The sum of RS and RST (or WS and WST) must be a minimum of 4 in order to use ARDY input to extend strobe width.
# Select signals include: $\overline{CEx}$, $\overline{BE[3:0]}$, EA[21:2], $\overline{AOE}$; and for writes, include ED[31:0], with the exception that $\overline{CEx}$ can stay active for an additional 7P ns following the end of the cycle.

ASYNCHRONOUS MEMORY TIMING (CONTINUED)

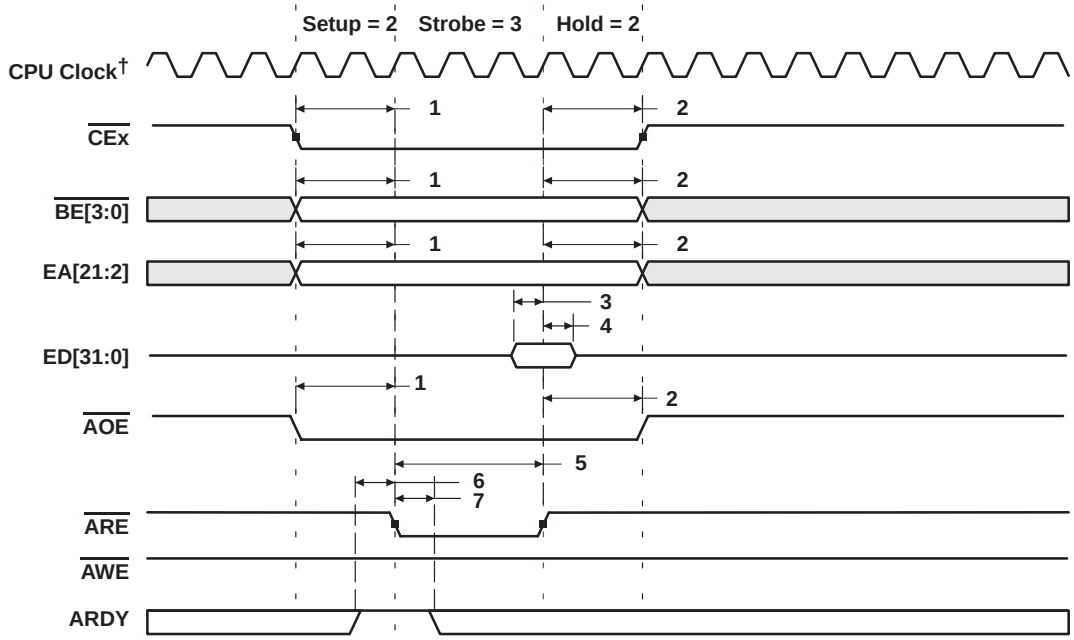

† CPU clock is an internal signal.

Figure 15. Asynchronous Memory Read Timing (ARDY Not Used)

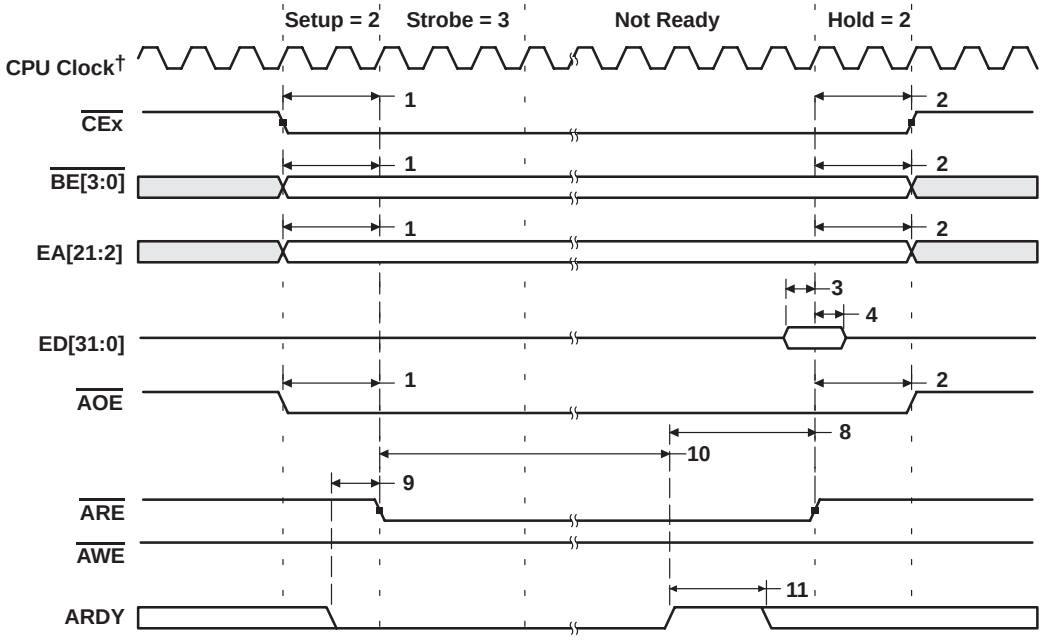

† CPU clock is an internal signal.

Figure 16. Asynchronous Memory Read Timing (ARDY Used)

ASYNCHRONOUS MEMORY TIMING (CONTINUED)

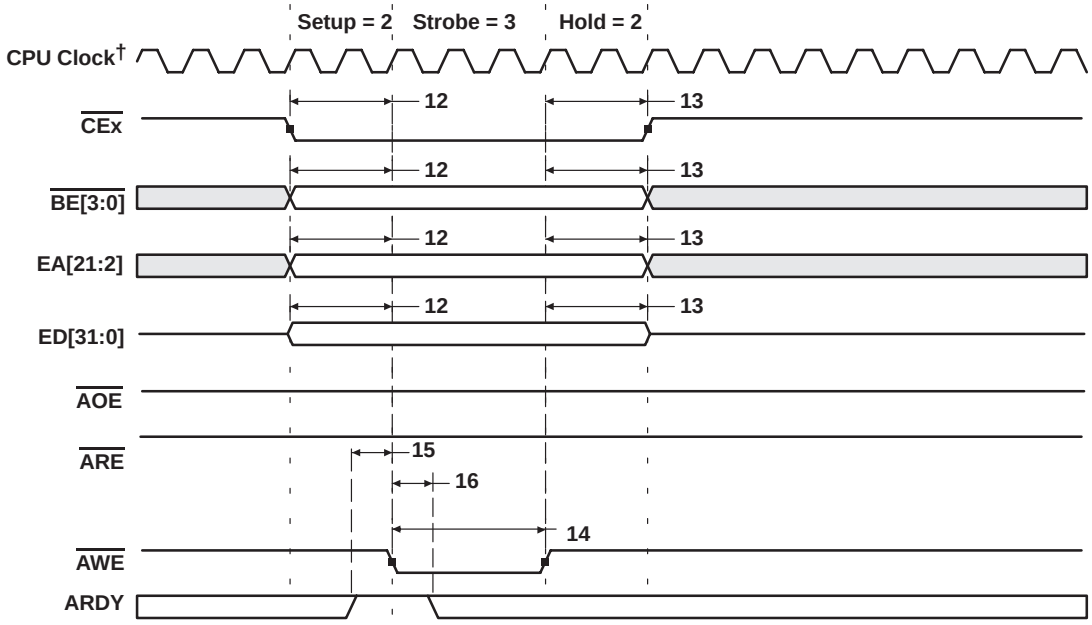

† CPU clock is an internal signal.

Figure 17. Asynchronous Memory Write Timing (ARDY Not Used)

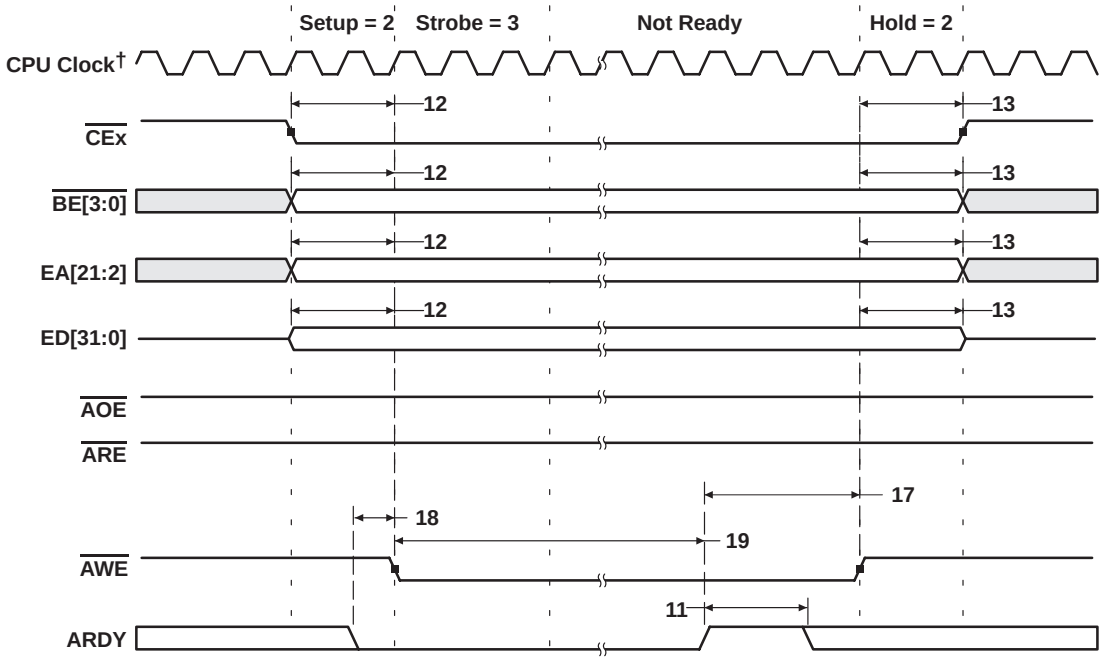

† CPU clock is an internal signal.

Figure 18. Asynchronous Memory Write Timing (ARDY Used)

SYNCHRONOUS-BURST MEMORY TIMING

timing requirements for synchronous-burst SRAM cycles (see Figure 19)

NO.			−200		UNIT
			MIN	MAX	
7	$t_{su(EDV-CKO2H)}$	Setup time, read EDx valid before CLKOUT2 high	2.5		ns
8	$t_{h(CKO2H-EDV)}$	Hold time, read EDx valid after CLKOUT2 high	1.5		ns

switching characteristics over recommended operating conditions for synchronous-burst SRAM cycles†‡ (see Figure 19 and Figure 20)

NO.	PARAMETER		−200		UNIT
			MIN	MAX	
1	$t_{osu(CEV-CKO2H)}$	Output setup time, $\overline{CEx}$ valid before CLKOUT2 high	P − 0.8		ns
2	$t_{oh(CKO2H-CEV)}$	Output hold time, $\overline{CEx}$ valid after CLKOUT2 high	P − 4		ns
3	$t_{osu(BEV-CKO2H)}$	Output setup time, $\overline{BEx}$ valid before CLKOUT2 high	P − 0.8		ns
4	$t_{oh(CKO2H-BEIV)}$	Output hold time, $\overline{BEx}$ invalid after CLKOUT2 high	P − 4		ns
5	$t_{osu(EAV-CKO2H)}$	Output setup time, EAx valid before CLKOUT2 high	P − 0.8		ns
6	$t_{oh(CKO2H-EAIV)}$	Output hold time, EAx invalid after CLKOUT2 high	P − 4		ns
9	$t_{osu(ADSV-CKO2H)}$	Output setup time, $\overline{SDCAS}$/$\overline{SSADS}$ valid before CLKOUT2 high	P − 0.8		ns
10	$t_{oh(CKO2H-ADSV)}$	Output hold time, $\overline{SDCAS}$/$\overline{SSADS}$ valid after CLKOUT2 high	P − 4		ns
11	$t_{osu(OEV-CKO2H)}$	Output setup time, $\overline{SDRAS}$/$\overline{SSOE}$ valid before CLKOUT2 high	P − 0.8		ns
12	$t_{oh(CKO2H-OEV)}$	Output hold time, $\overline{SDRAS}$/$\overline{SSOE}$ valid after CLKOUT2 high	P − 4		ns
13	$t_{osu(EDV-CKO2H)}$	Output setup time, EDx valid before CLKOUT2 high§	P − 1		ns
14	$t_{oh(CKO2H-EDIV)}$	Output hold time, EDx invalid after CLKOUT2 high	P − 4		ns
15	$t_{osu(WEV-CKO2H)}$	Output setup time, $\overline{SDWE}$/$\overline{SSWE}$ valid before CLKOUT2 high	P − 0.8		ns
16	$t_{oh(CKO2H-WEV)}$	Output hold time, $\overline{SDWE}$/$\overline{SSWE}$ valid after CLKOUT2 high	P − 4		ns

† P = 1/CPU clock frequency in ns. For example, when running parts at 200 MHz, use P = 5 ns.
‡ $\overline{SDCAS}$/$\overline{SSADS}$, $\overline{SDRAS}$/$\overline{SSOE}$, and $\overline{SDWE}$/$\overline{SSWE}$ operate as $\overline{SSADS}$, $\overline{SSOE}$, and $\overline{SSWE}$, respectively, during SBSRAM accesses.
§ For the first write in a series of one or more consecutive adjacent writes, the write data is generated one CLKOUT2 cycle early to accommodate the ED enable time.

SYNCHRONOUS-BURST MEMORY TIMING (CONTINUED)

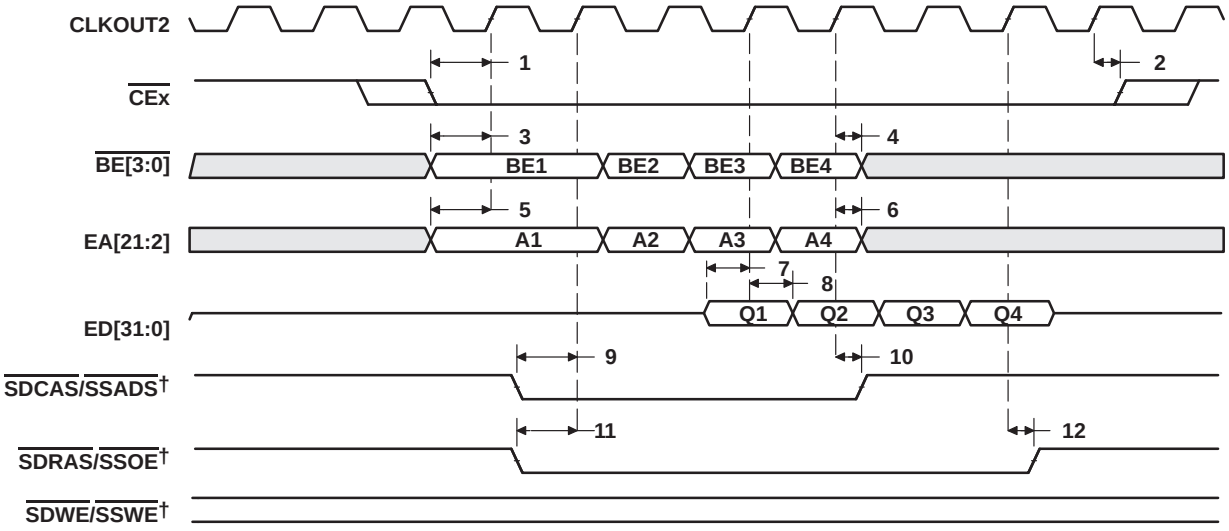

† SDCAS/SSADS, SDRAS/SSOE, and SDWE/SSWE operate as SSADS, SSOE, and SSWE, respectively, during SBSRAM accesses.

Figure 19. SBSRAM Read Timing

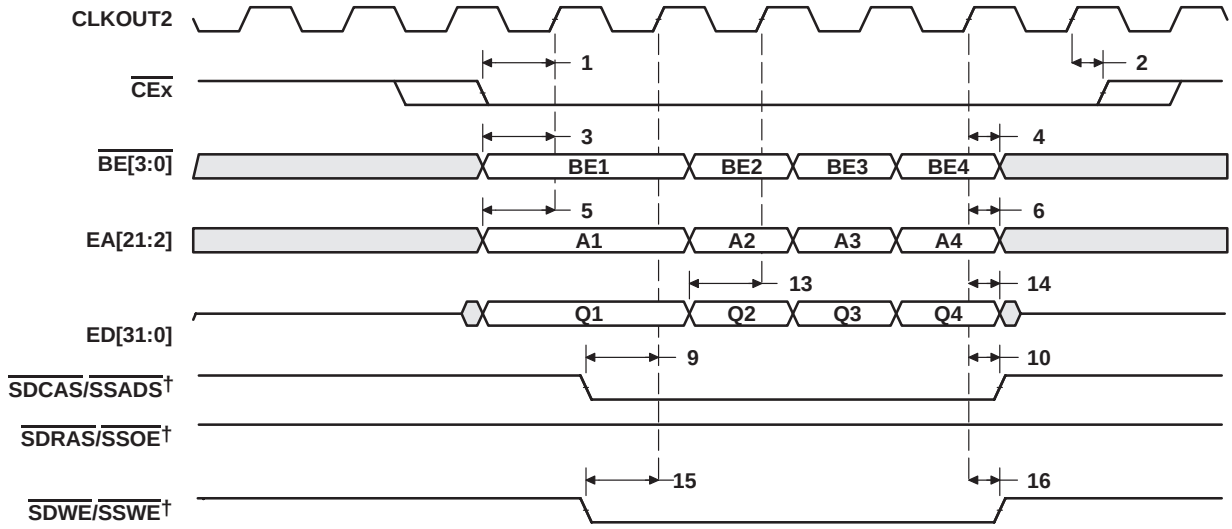

† SDCAS/SSADS, SDRAS/SSOE, and SDWE/SSWE operate as SSADS, SSOE, and SSWE, respectively, during SBSRAM accesses.

Figure 20. SBSRAM Write Timing

SYNCHRONOUS DRAM TIMING

timing requirements for synchronous DRAM cycles (see Figure 21)

NO.			−200		UNIT
			MIN	MAX	
7	$t_{su(EDV-CKO2H)}$	Setup time, read EDx valid before CLKOUT2 high	1.25		ns
8	$t_{h(CKO2H-EDV)}$	Hold time, read EDx valid after CLKOUT2 high	3		ns

switching characteristics over recommended operating conditions for synchronous DRAM cycles†‡ (see Figure 21−Figure 26)

NO.	PARAMETER		−200		UNIT
			MIN	MAX	
1	$t_{osu(CEV-CKO2H)}$	Output setup time, $\overline{CEx}$ valid before CLKOUT2 high	P − 1		ns
2	$t_{oh(CKO2H-CEV)}$	Output hold time, $\overline{CEx}$ valid after CLKOUT2 high	P − 3.5		ns
3	$t_{osu(BEV-CKO2H)}$	Output setup time, $\overline{BEx}$ valid before CLKOUT2 high	P − 1		ns
4	$t_{oh(CKO2H-BEIV)}$	Output hold time, $\overline{BEx}$ invalid after CLKOUT2 high	P − 3.5		ns
5	$t_{osu(EAV-CKO2H)}$	Output setup time, EAx valid before CLKOUT2 high	P − 1		ns
6	$t_{oh(CKO2H-EAIV)}$	Output hold time, EAx invalid after CLKOUT2 high	P − 3.5		ns
9	$t_{osu(CASV-CKO2H)}$	Output setup time, $\overline{SDCAS}$/$\overline{SSADS}$ valid before CLKOUT2 high	P − 1		ns
10	$t_{oh(CKO2H-CASV)}$	Output hold time, $\overline{SDCAS}$/$\overline{SSADS}$ valid after CLKOUT2 high	P − 3.5		ns
11	$t_{osu(EDV-CKO2H)}$	Output setup time, EDx valid before CLKOUT2 high§	P − 3		ns
12	$t_{oh(CKO2H-EDIV)}$	Output hold time, EDx invalid after CLKOUT2 high	P − 3.5		ns
13	$t_{osu(WEV-CKO2H)}$	Output setup time, $\overline{SDWE}$/$\overline{SSWE}$ valid before CLKOUT2 high	P − 1		ns
14	$t_{oh(CKO2H-WEV)}$	Output hold time, $\overline{SDWE}$/$\overline{SSWE}$ valid after CLKOUT2 high	P − 3.5		ns
15	$t_{osu(SDA10V-CKO2H)}$	Output setup time, SDA10 valid before CLKOUT2 high	P − 1		ns
16	$t_{oh(CKO2H-SDA10IV)}$	Output hold time, SDA10 invalid after CLKOUT2 high	P − 3.5		ns
17	$t_{osu(RASV-CKO2H)}$	Output setup time, $\overline{SDRAS}$/$\overline{SSOE}$ valid before CLKOUT2 high	P − 1		ns
18	$t_{oh(CKO2H-RASV)}$	Output hold time, $\overline{SDRAS}$/$\overline{SSOE}$ valid after CLKOUT2 high	P − 3.5		ns

† P = 1/CPU clock frequency in ns. For example, when running parts at 200 MHz, use P = 5 ns.
‡ $\overline{SDCAS}$/$\overline{SSADS}$, $\overline{SDRAS}$/$\overline{SSOE}$, and $\overline{SDWE}$/$\overline{SSWE}$ operate as $\overline{SDCAS}$, $\overline{SDRAS}$, and $\overline{SDWE}$, respectively, during SDRAM accesses.
§ For the first write in a series of one or more consecutive adjacent writes, the write data is generated one CLKOUT2 cycle early to accommodate the ED enable time.

SYNCHRONOUS DRAM TIMING (CONTINUED)

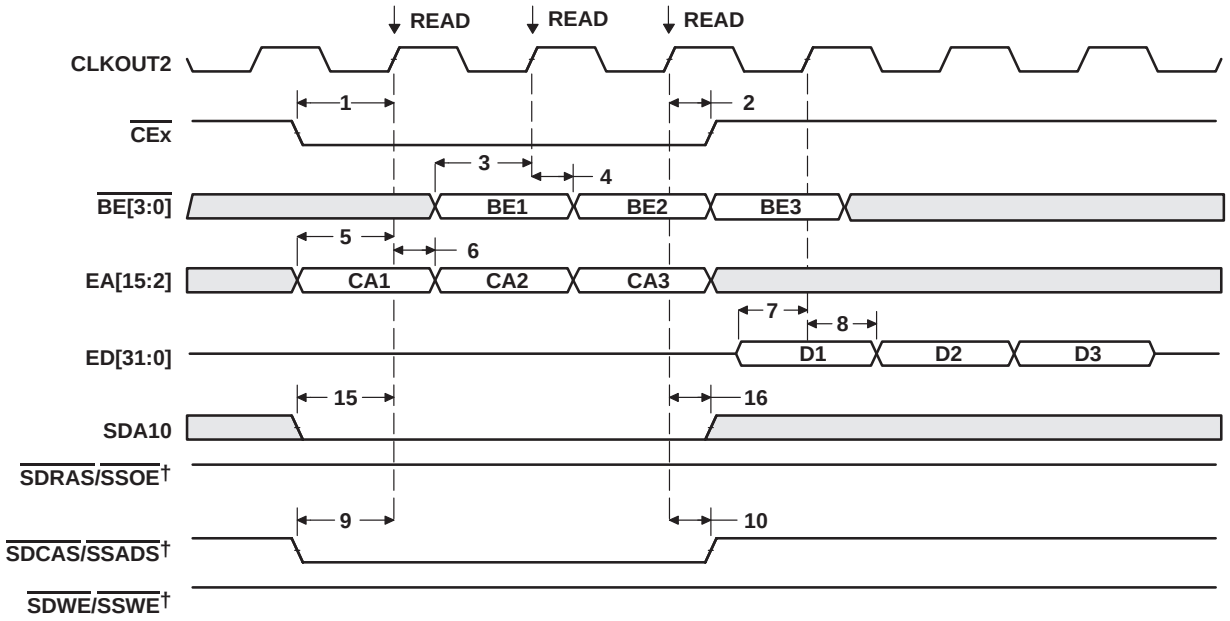

† SDCAS/SSADS, SDRAS/SSOE, and SDWE/SSWE operate as SDCAS, SDRAS, and SDWE, respectively, during SDRAM accesses.

Figure 21. Three SDRAM READ Commands

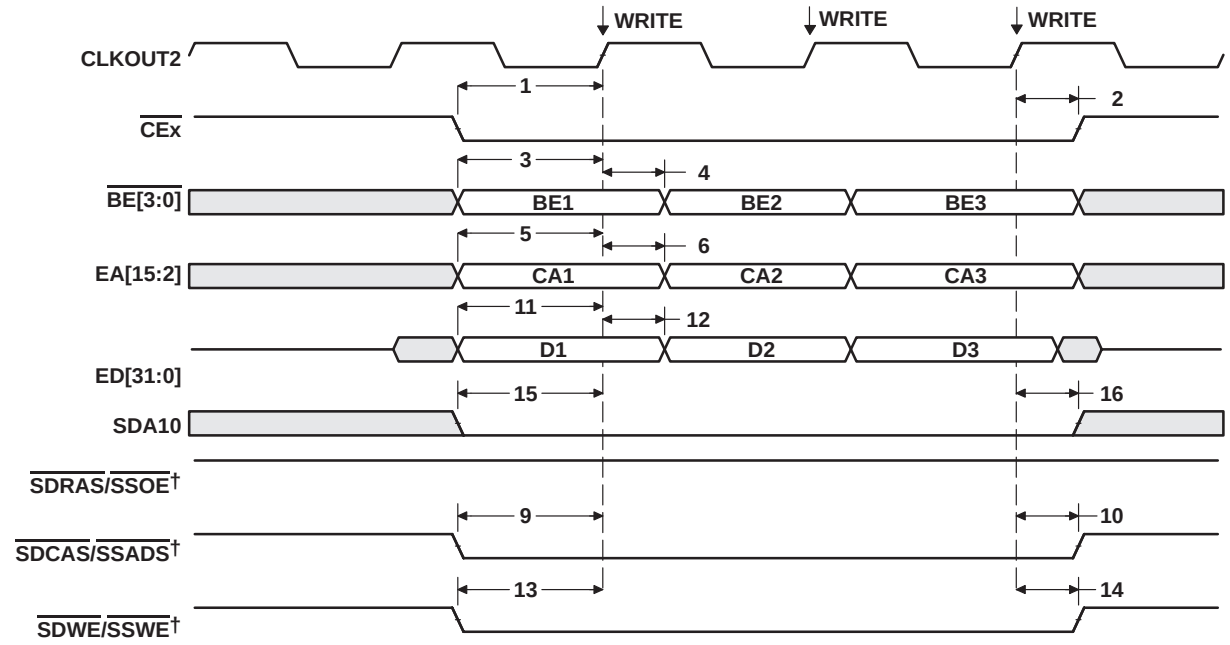

† SDCAS/SSADS, SDRAS/SSOE, and SDWE/SSWE operate as SDCAS, SDRAS, and SDWE, respectively, during SDRAM accesses.

Figure 22. Three SDRAM WRT Commands

SYNCHRONOUS DRAM TIMING (CONTINUED)

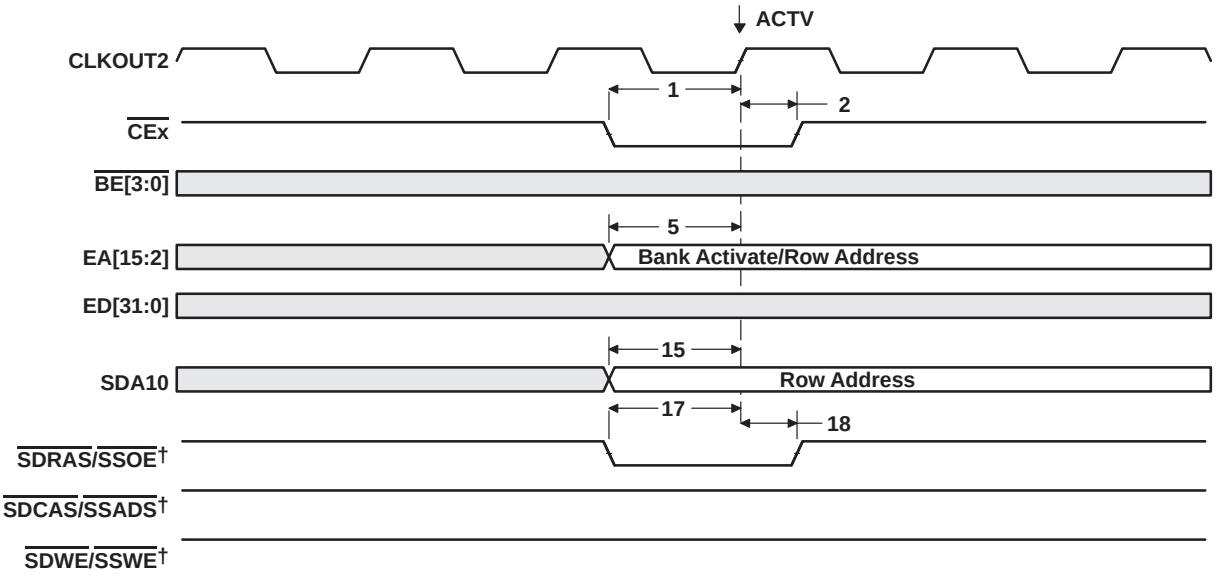

† SDCAS/SSADS, SDRAS/SSOE, and SDWE/SSWE operate as SDCAS, SDRAS, and SDWE, respectively, during SDRAM accesses.

Figure 23. SDRAM ACTV Command

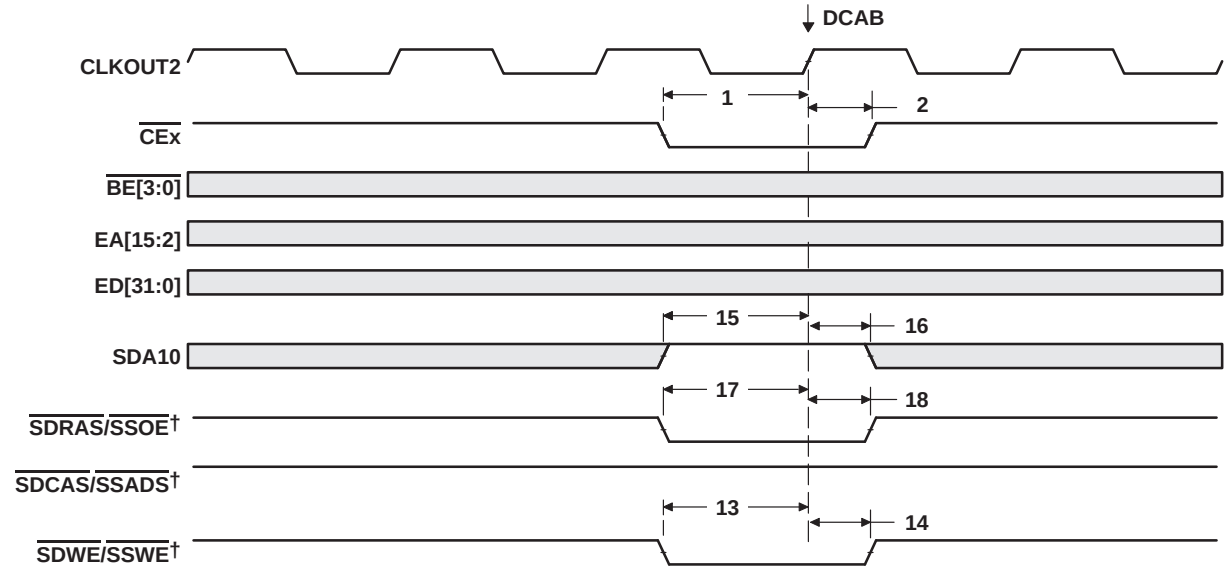

† SDCAS/SSADS, SDRAS/SSOE, and SDWE/SSWE operate as SDCAS, SDRAS, and SDWE, respectively, during SDRAM accesses.

Figure 24. SDRAM DCAB Command

SYNCHRONOUS DRAM TIMING (CONTINUED)

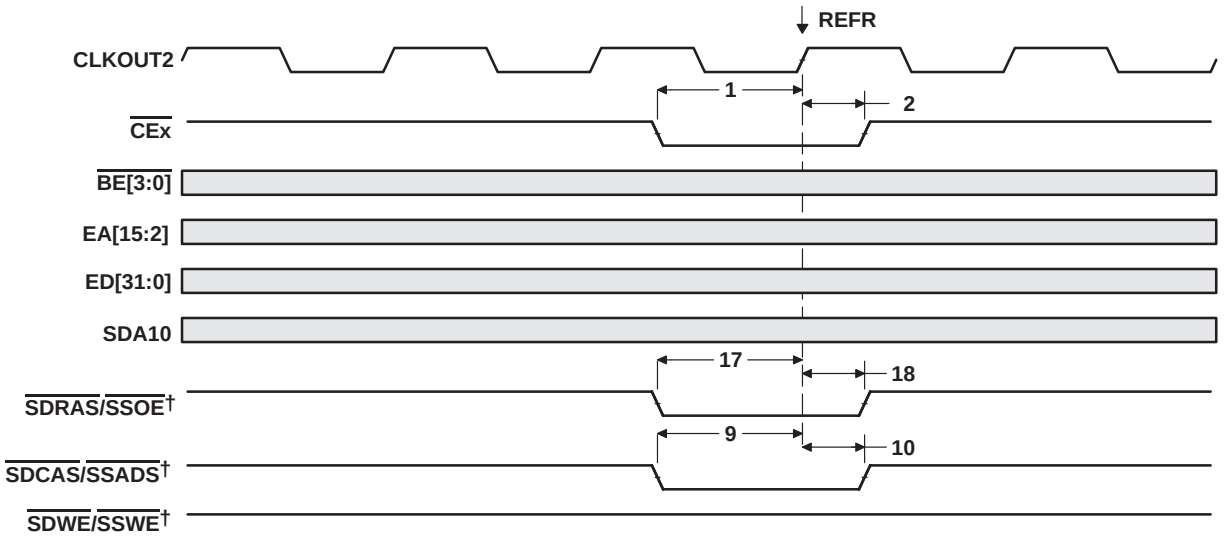

† SDCAS/SSADS, SDRAS/SSOE, and SDWE/SSWE operate as SDCAS, SDRAS, and SDWE, respectively, during SDRAM accesses.

Figure 25. SDRAM REFR Command

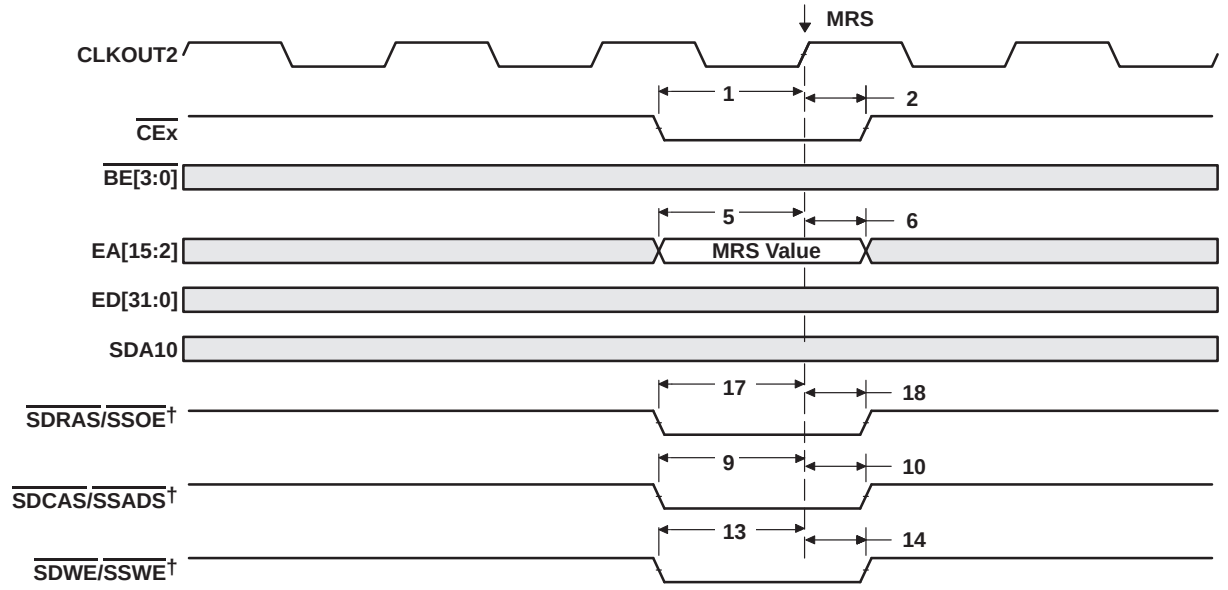

† SDCAS/SSADS, SDRAS/SSOE, and SDWE/SSWE operate as SDCAS, SDRAS, and SDWE, respectively, during SDRAM accesses.

Figure 26. SDRAM MRS Command

HOLD/HOLDA TIMING

timing requirements for the HOLD/HOLDA cycles† (see Figure 27)

NO.		−200		UNIT
		MIN	MAX	
3	$t_{oh(HOLDAL-HOLDL)}$ Output hold time, HOLD low after HOLDA low	P		ns

† P = 1/CPU clock frequency in ns. For example, when running parts at 200 MHz, use P = 5 ns.

switching characteristics over recommended operating conditions for the HOLD/HOLDA cycles†‡ (see Figure 27)

NO.	PARAMETER		−200		UNIT
			MIN	MAX	
1	$t_{d(HOLDL-EMHZ)}$	Delay time, HOLD low to EMIF Bus high impedance	4P	§	ns
2	$t_{d(EMHZ-HOLDAL)}$	Delay time, EMIF Bus high impedance to HOLDA low	0	2P	ns
4	$t_{d(HOLDH-EMLZ)}$	Delay time, HOLD high to EMIF Bus low impedance	3P	7P	ns
5	$t_{d(EMLZ-HOLDAH)}$	Delay time, EMIF Bus low impedance to HOLDA high	0	2P	ns

† P = 1/CPU clock frequency in ns. For example, when running parts at 200 MHz, use P = 5 ns.
‡ EMIF Bus consists of CE[3:0], BE[3:0], ED[31:0], EA[21:2], ARE, AOE, AWE, SDCAS/SSADS, SDRAS/SSOE, SDWE/SSWE, and SDA10.
§ All pending EMIF transactions are allowed to complete before HOLDA is asserted. The worst case for this is an asynchronous read or write with external ARDY used or a minimum of eight consecutive SDRAM reads or writes when RBTR8 = 1. If no bus transactions are occurring, then the minimum delay time can be achieved. Also, bus hold can be indefinitely delayed by setting NOHOLD = 1.

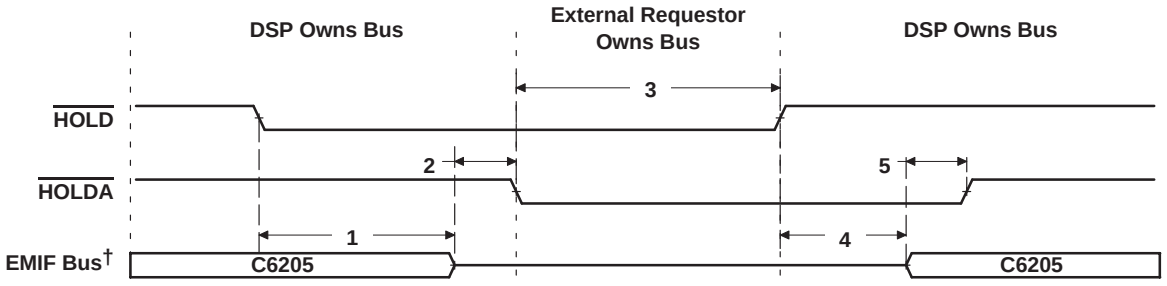

† EMIF Bus consists of CE[3:0], BE[3:0], ED[31:0], EA[21:2], ARE, AOE, AWE, SDCAS/SSADS, SDRAS/SSOE, SDWE/SSWE, and SDA10.

Figure 27. HOLD/HOLDA Timing

RESET TIMING

timing requirements for reset (see Figure 28)

NO.			−200		UNIT
			MIN	MAX	
1	$t_{w(RST)}$	Width of the RESET pulse (PLL stable)†	10P‡		ns
		Width of the RESET pulse (PLL needs to sync up)§	250		µs
10	$t_{su(ED)}$	Setup time, ED boot configuration bits valid before RESET high¶	5P‡#		ns
11	$t_{h(ED)}$	Hold time, ED boot configuration bits valid after RESET high¶	5P‡		ns

† This parameter applies to CLKMODE x1 when CLKIN is stable, and applies to CLKMODE x4, x6, x7, x8, x9, x10, and x11 when CLKIN and PLL are stable.
‡ P = 1/CPU clock frequency in ns. For example, when running parts at 200 MHz, use P = 5 ns.
§ This parameter applies to CLKMODE x4, x6, x7, x8, x9, x10, and x11 only. The RESET signal is not connected internally to the Clock PLL circuit. The PLL requires a minimum of 250 µs to stabilize following device power up or after PLL configuration has been changed. During that time, RESET must be asserted to ensure proper device operation. See the *clock PLL* section for power up (specifically Figure 5, Note E) and for PLL lock times (Table 4).
¶ ED[31:0] are the boot configuration pins during device reset.
# A 250 µs setup time before the rising edge of RESET is required when using CLKMODE x4, x6, x7, x8, x9, x10, or x11.

switching characteristics over recommended operating conditions during reset‡‖ (see Figure 28)

NO.	PARAMETER		−200		UNIT
			MIN	MAX	
2	$t_{d(RSTL-CKO2IV)}$	Delay time, RESET low to CLKOUT2 invalid	P		ns
3	$t_{d(RSTH-CKO2V)}$	Delay time, RESET high to CLKOUT2 valid		4P	ns
4	$t_{d(RSTL-HIGHIV)}$	Delay time, RESET low to high group invalid	P		ns
5	$t_{d(RSTH-HIGHV)}$	Delay time, RESET high to high group valid		4P	ns
6	$t_{d(RSTL-LOWIV)}$	Delay time, RESET low to low group invalid	P		ns
7	$t_{d(RSTH-LOWV)}$	Delay time, RESET high to low group valid		4P	ns
8	$t_{d(RSTL-ZHZ)}$	Delay time, RESET low to Z group high impedance	P		ns
9	$t_{d(RSTH-ZV)}$	Delay time, RESET high to Z group valid		4P	ns

‡ P = 1/CPU clock frequency in ns. For example, when running parts at 200 MHz, use P = 5 ns.
‖ High group consists of: HOLDA
Low group consists of: IACK, INUM[3:0], DMAC[3:0], PD, TOUT0, and TOUT1, XSP_CLK, XSP_DO, and XSP_CS
Z group consists of: EA[21:2], ED[31:0], CE[3:0], BE[3:0], ARE, AWE, AOE, SDCAS/SSADS, SDRAS/SSOE, SDWE/SSWE, SDA10, CLKX0, CLKX1, FSX0, FSX1, DX0, DX1, CLKR0, CLKR1, FSR0, FSR1, AD[31:0], PCBE[3:0], PINTA, PREQ, PSERR, PPERR, PDEVSEL, PFRAME, PIRDY, PPAR, PSTOP, PTRDY, and PME

RESET TIMING (CONTINUED)

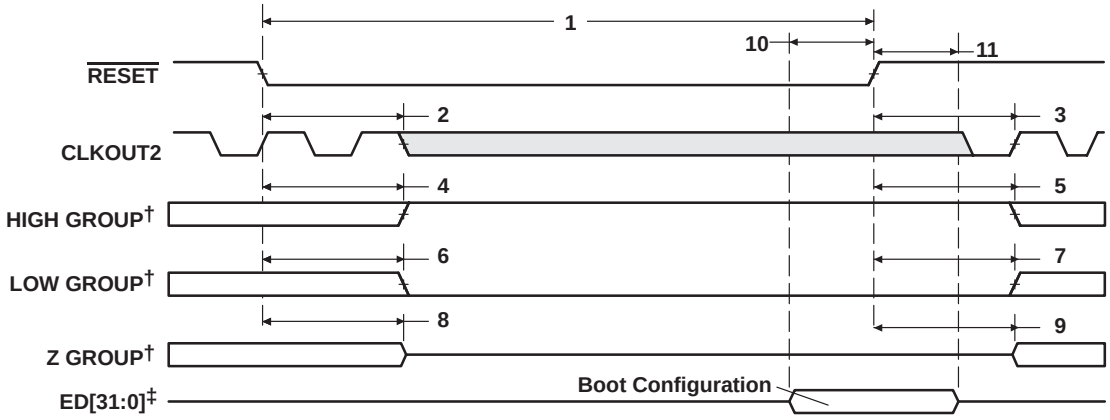

† High group consists of: HOLDA
Low group consists of: IACK, INUM[3:0], DMAC[3:0], PD, TOUT0, and TOUT1, XSP_CLK, XSP_DO, and XSP_CS
Z group consists of: EA[21:2], ED[31:0], CE[3:0], BE[3:0], ARE, AWE, AOE, SDCAS/SSADS, SDRAS/SSOE, SDWE/SSWE, SDA10, CLKX0, CLKX1, FSX0, FSX1, DX0, DX1, CLKR0, CLKR1, FSR0, FSR1, AD[31:0], PCBE[3:0], PINTA, PREQ, PSERR, PPERR, PDEVSEL, PFRAME, PIRDY, PPAR, PSTOP, PTRDY, and PME

‡ ED[31:0] are the boot configuration pins during device reset.

Figure 28. Reset Timing

EXTERNAL INTERRUPT TIMING

timing requirements for interrupt response cycles† (see Figure 29)

NO.			−200		UNIT
			MIN	MAX	
2	$t_{w(ILOW)}$	Width of the interrupt pulse low	2P		ns
3	$t_{w(IHIGH)}$	Width of the interrupt pulse high	2P		ns

† P = 1/CPU clock frequency in ns. For example, when running parts at 200 MHz, use P = 5 ns.

switching characteristics over recommended operating conditions during interrupt response cycles† (see Figure 29)

NO.	PARAMETER		−200		UNIT
			MIN	MAX	
1	$t_{R(EINTH - IACKH)}$	Response time, EXT_INTx high to IACK high	9P		ns
4	$t_{d(CKO2L-IACKV)}$	Delay time, CLKOUT2 low to IACK valid	0	10	ns
5	$t_{d(CKO2L-INUMV)}$	Delay time, CLKOUT2 low to INUMx valid	0	10	ns
6	$t_{d(CKO2L-INUMIV)}$	Delay time, CLKOUT2 low to INUMx invalid	0	10	ns

† P = 1/CPU clock frequency in ns. For example, when running parts at 200 MHz, use P = 5 ns.

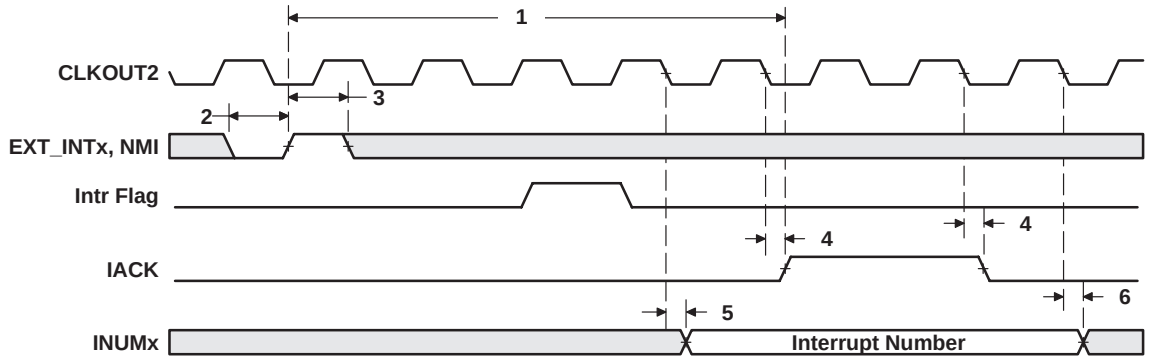

Figure 29. Interrupt Timing

PCI I/O TIMINGS

timing requirements for PCI inputs (see Figure 30)

NO.			−200		UNIT
			MIN	MAX	
5	$t_{su(IV-PCLKH)}$	Setup time, input valid before PCLK high	7		ns
6	$t_{h(IV-PCLKH)}$	Hold time, input valid after PCLK high	0		ns

switching characteristics over recommended operating conditions for PCI outputs (see Figure 30)

NO.	PARAMETER		−200		UNIT
			MIN	MAX	
1	$t_{d(PCLKH-OV)}$	Delay time, PCLK high to output valid		11	ns
2	$t_{d(PCLKH-OIV)}$	Delay time, PCLK high to output invalid	2		ns
3	$t_{d(PCLKH-OLZ)}$	Delay time, PCLK high to output low impedance	2		ns
4	$t_{d(PCLKH-OHZ)}$	Delay time, PCLK high to output high impedance		28	ns

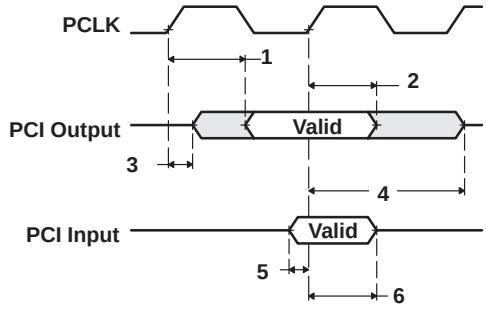

Figure 30. PCI Intput/Output Timings

PCI RESET TIMING

timing requirements for PCI reset (see Figure 31)

NO.			−200		UNIT
			MIN	MAX	
1	$t_{w(PRST)}$	Pulse duration, $\overline{PRST}$	1		ms
2	$t_{su(PCLKA-PRSTH)}$	Setup time, PCLK active before $\overline{PRST}$ high	100		µs

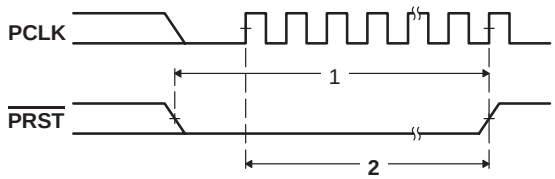

Figure 31. PCI Reset ($\overline{PRST}$) Timings

PCI SERIAL EEPROM INTERFACE TIMING

timing requirements for serial EEPROM interface (see Figure 32)

NO.			−200		UNIT
			MIN	MAX	
8	$t_{su(DIV-CLKH)}$	Setup time, XSP_DI valid before XSP_CLK high	50		ns
9	$t_{h(CLKH-DIV)}$	Hold time, XSP_DI valid after XSP_CLK high	0		ns

switching characteristics over recommended operating conditions for serial EEPROM interface† (see Figure 32)

NO.	PARAMETER		−200			UNIT
			MIN	NOM	MAX	
1	$t_{w(CSL)}$	Pulse duration, XSP_CS low		2046P		ns
2	$t_{d(CLKL-CSL)}$	Delay time, XSP_CLK low to XSP_CS low		0		ns
3	$t_{d(CSH-CLKH)}$	Delay time, XSP_CS high to XSP_CLK high		1023P		ns
4	$t_{w(CLKH)}$	Pulse duration, XSP_CLK high		1023P		ns
5	$t_{w(CLKL)}$	Pulse duration, XSP_CLK low		1023P		ns
6	$t_{osu(DOV-CLKH)}$	Output setup time, XSP_DO valid after XSP_CLK high		1023P		ns
7	$t_{oh(CLKH-DOV)}$	Output hold time, XSP_DO valid after XSP_CLK high		1023P		ns

† P = 1/CPU clock frequency in ns. For example, when running parts at 200 MHz, use P = 5 ns.

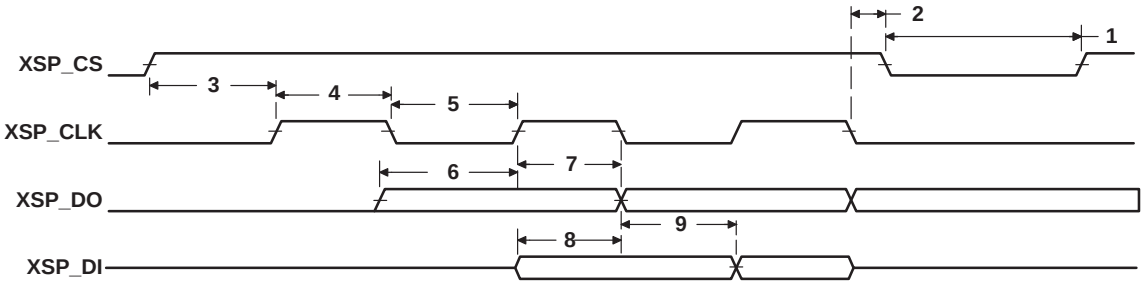

Figure 32. PCI Serial EEPROM Interface Timing

MULTICHANNEL BUFFERED SERIAL PORT TIMING

timing requirements for McBSP†‡ (see Figure 33)

NO.				−200		UNIT
				MIN	MAX	
2	$t_{c(CKRX)}$	Cycle time, CLKR/X	CLKR/X ext	2P§		ns
3	$t_{w(CKRX)}$	Pulse duration, CLKR/X high or CLKR/X low	CLKR/X ext	P−1¶		ns
5	$t_{su(FRH-CKRL)}$	Setup time, external FSR high before CLKR low	CLKR int	9		ns
			CLKR ext	2		
6	$t_{h(CKRL-FRH)}$	Hold time, external FSR high after CLKR low	CLKR int	6		ns
			CLKR ext	3		
7	$t_{su(DRV-CKRL)}$	Setup time, DR valid before CLKR low	CLKR int	8		ns
			CLKR ext	0.5		
8	$t_{h(CKRL-DRV)}$	Hold time, DR valid after CLKR low	CLKR int	4		ns
			CLKR ext	3		
10	$t_{su(FXH-CKXL)}$	Setup time, external FSX high before CLKX low	CLKX int	9		ns
			CLKX ext	2		
11	$t_{h(CKXL-FXH)}$	Hold time, external FSX high after CLKX low	CLKX int	6		ns
			CLKX ext	3		

† CLKRP = CLKXP = FSRP = FSXP = 0. If the polarity of any of the signals is inverted, then the timing references of that signal are also inverted.

‡ P = 1/CPU clock frequency in ns. For example, when running parts at 200 MHz, use P = 5 ns.

§ The maximum bit rate for the C6205 devices is 100 Mbps or CPU/2 (the slower of the two). Care must be taken to ensure that the AC timings specified in this data sheet are met. The maximum bit rate for McBSP-to-McBSP communications is 100 MHz; therefore, the minimum CLKR/X clock cycle is either twice the CPU cycle time (2P), or 10 ns (100 MHz), whichever value is larger. For example, when running parts at 200 MHz (P = 5 ns), use 10 ns as the minimum CLKR/X clock cycle (by setting the appropriate CLKGDV ratio or external clock source). When running parts at 100 MHz (P = 10 ns), use 2P = 20 ns (50 MHz) as the minimum CLKR/X clock cycle. The maximum bit rate for McBSP-to-McBSP communications applies when the serial port is a master of the clock and frame syncs (with CLKR connected to CLKX, FSR connected to FSX, CLKXM = FSXM = 1, and CLKRM = FSRM = 0) in data delay 1 or 2 mode (R/XDATDLY = 01b or 10b) and the other device the McBSP communicates to is a slave.

¶ The minimum CLKR/X pulse duration is either (P−1) or 4 ns, whichever is larger. For example, when running parts at 200 MHz (P = 5 ns), use 4 ns as the minimum CLKR/X pulse duration. When running parts at 100 MHz (P = 10 ns), use (P−1) = 9 ns as the minimum CLKR/X pulse duration.

MULTICHANNEL BUFFERED SERIAL PORT TIMING (CONTINUED)

switching characteristics over recommended operating conditions for McBSP†‡ (see Figure 33)

NO.	PARAMETER			−200		UNIT
				MIN	MAX	
1	$t_{d(CKSH-CKRXH)}$	Delay time, CLKS high to CLKR/X high for internal CLKR/X generated from CLKS input		3	12	ns
2	$t_{c(CKRX)}$	Cycle time, CLKR/X	CLKR/X int	2P−2§¶		ns
3	$t_{w(CKRX)}$	Pulse duration, CLKR/X high or CLKR/X low	CLKR/X int	C − 2#	C + 2#	ns
4	$t_{d(CKRH-FRV)}$	Delay time, CLKR high to internal FSR valid	CLKR int	−3	3	ns
9	$t_{d(CKXH-FXV)}$	Delay time, CLKX high to internal FSX valid	CLKX int	−3	3	ns
			CLKX ext	3	9	
12	$t_{dis(CKXH-DXHZ)}$	Disable time, DX high impedance following last data bit from CLKX high	CLKX int	−1	4	ns
			CLKX ext	3	9	
13	$t_{d(CKXH-DXV)}$	Delay time, CLKX high to DX valid	CLKX int	−1	4	ns
			CLKX ext	2	12	
14	$t_{d(FXH-DXV)}$	Delay time, FSX high to DX valid ONLY applies when in data delay 0 (XDATDLY = 00b) mode.	FSX int	−1	5	ns
			FSX ext	2	12	

† CLKRP = CLKXP = FSRP = FSXP = 0. If the polarity of any of the signals is inverted, then the timing references of that signal are also inverted.

‡ Minimum delay times also represent minimum output hold times.

§ P = 1/CPU clock frequency in ns. For example, when running parts at 200 MHz, use P = 5 ns.

¶ The maximum bit rate for the C6205 devices is 100 Mbps or CPU/2 (the slower of the two). Care must be taken to ensure that the AC timings specified in this data sheet are met. The maximum bit rate for McBSP-to-McBSP communications is 100 MHz; therefore, the minimum CLKR/X clock cycle is either twice the CPU cycle time (2P), or 10 ns (100 MHz), whichever value is larger. For example, when running parts at 200 MHz (P = 5 ns), use 10 ns as the minimum CLKR/X clock cycle (by setting the appropriate CLKGDV ratio or external clock source). When running parts at 100 MHz (P = 10 ns), use 2P = 20 ns (50 MHz) as the minimum CLKR/X clock cycle. The maximum bit rate for McBSP-to-McBSP communications applies when the serial port is a master of the clock and frame syncs (with CLKR connected to CLKX, FSR connected to FSX, CLKXM = FSXM = 1, and CLKRM = FSRM = 0) in data delay 1 or 2 mode (R/XDATDLY = 01b or 10b) and the other device the McBSP communicates to is a slave.

# C = H or L
S = sample rate generator input clock = P if CLKSM = 1 (P = 1/CPU clock frequency)
= sample rate generator input clock = P_clks if CLKSM = 0 (P_clks = CLKS period)
H = CLKX high pulse width = (CLKGDV/2 + 1) * S if CLKGDV is even
= (CLKGDV + 1)/2 * S if CLKGDV is odd or zero
L = CLKX low pulse width = (CLKGDV/2) * S if CLKGDV is even
= (CLKGDV + 1)/2 * S if CLKGDV is odd or zero
CLKGDV should be set appropriately to ensure the McBSP bit rate does not exceed the 100-MHz limit.

MULTICHANNEL BUFFERED SERIAL PORT TIMING (CONTINUED)

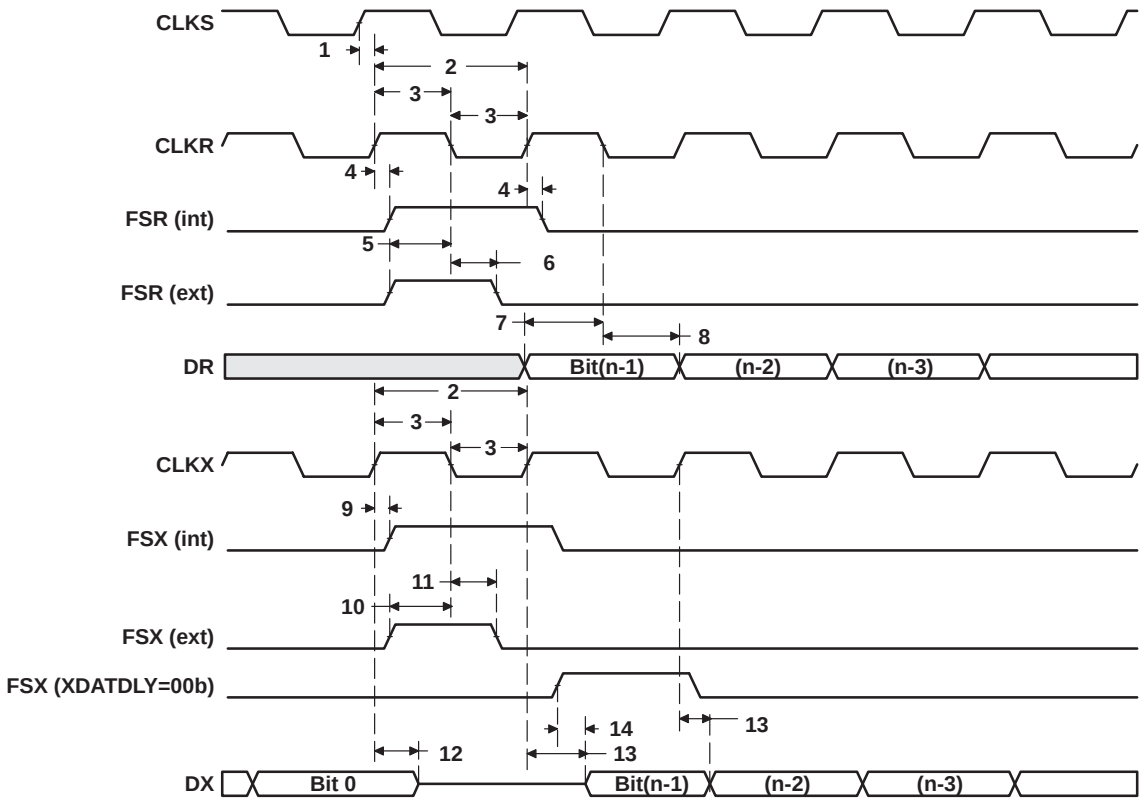

Figure 33. McBSP Timings

MULTICHANNEL BUFFERED SERIAL PORT TIMING (CONTINUED)

timing requirements for FSR when GSYNC = 1 (see Figure 34)

NO.			−200		UNIT
			MIN	MAX	
1	$t_{su(FRH-CKSH)}$	Setup time, FSR high before CLKS high	4		ns
2	$t_{h(CKSH-FRH)}$	Hold time, FSR high after CLKS high	4		ns

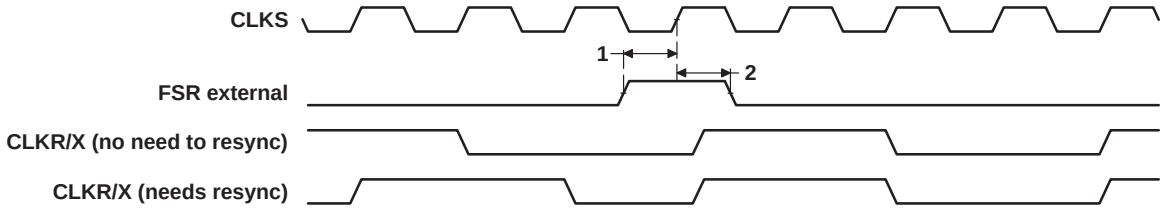

Figure 34. FSR Timing When GSYNC = 1

MULTICHANNEL BUFFERED SERIAL PORT TIMING (CONTINUED)

timing requirements for McBSP as SPI master or slave: CLKSTP = 10b, CLKXP = 0†‡ (see Figure 35)

NO.			−200				UNIT
			MASTER		SLAVE		
			MIN	MAX	MIN	MAX	
4	$t_{su(DRV-CKXL)}$	Setup time, DR valid before CLKX low	12		2 − 3P		ns
5	$t_{h(CKXL-DRV)}$	Hold time, DR valid after CLKX low	4		6 + 6P		ns

† P = 1/CPU clock frequency in ns. For example, when running parts at 200 MHz, use P = 5 ns.
‡ For all SPI slave modes, CLKG is programmed as 1/2 of the CPU clock by setting CLKSM = CLKGDV = 1.

switching characteristics over recommended operating conditions for McBSP as SPI master or slave: CLKSTP = 10b, CLKXP = 0†‡ (see Figure 35)

NO.	PARAMETER		−200				UNIT
			MASTER§		SLAVE		
			MIN	MAX	MIN	MAX	
1	$t_{h(CKXL-FXL)}$	Hold time, FSX low after CLKX low¶	T − 3	T + 5			ns
2	$t_{d(FXL-CKXH)}$	Delay time, FSX low to CLKX high#	L − 4	L + 5			ns
3	$t_{d(CKXH-DXV)}$	Delay time, CLKX high to DX valid	−4	5	3P + 3	5P + 17	ns
6	$t_{dis(CKXL-DXHZ)}$	Disable time, DX high impedance following last data bit from CLKX low	L − 2	L + 3			ns
7	$t_{dis(FXH-DXHZ)}$	Disable time, DX high impedance following last data bit from FSX high			P + 3	3P + 17	ns
8	$t_{d(FXL-DXV)}$	Delay time, FSX low to DX valid			2P + 2	4P + 17	ns

† P = 1/CPU clock frequency in ns. For example, when running parts at 200 MHz, use P = 5 ns.
‡ For all SPI slave modes, CLKG is programmed as 1/2 of the CPU clock by setting CLKSM = CLKGDV = 1.
§ S = sample rate generator input clock = P if CLKSM = 1 (P = 1/CPU clock frequency)
= sample rate generator input clock = P_clks if CLKSM = 0 (P_clks = CLKS period)
T = CLKX period = (1 + CLKGDV) * S
H = CLKX high pulse width = (CLKGDV/2 + 1) * S if CLKGDV is even
= (CLKGDV + 1)/2 * S if CLKGDV is odd or zero
L = CLKX low pulse width = (CLKGDV/2) * S if CLKGDV is even
= (CLKGDV + 1)/2 * S if CLKGDV is odd or zero
¶ FSRP = FSXP = 1. As a SPI master, FSX is inverted to provide active-low slave-enable output. As a slave, the active-low signal input on FSX and FSR is inverted before being used internally.
CLKXM = FSXM = 1, CLKRM = FSRM = 0 for master McBSP
CLKXM = CLKRM = FSXM = FSRM = 0 for slave McBSP
# FSX should be low before the rising edge of clock to enable slave devices and then begin a SPI transfer at the rising edge of the master clock (CLKX).

MULTICHANNEL BUFFERED SERIAL PORT TIMING (CONTINUED)

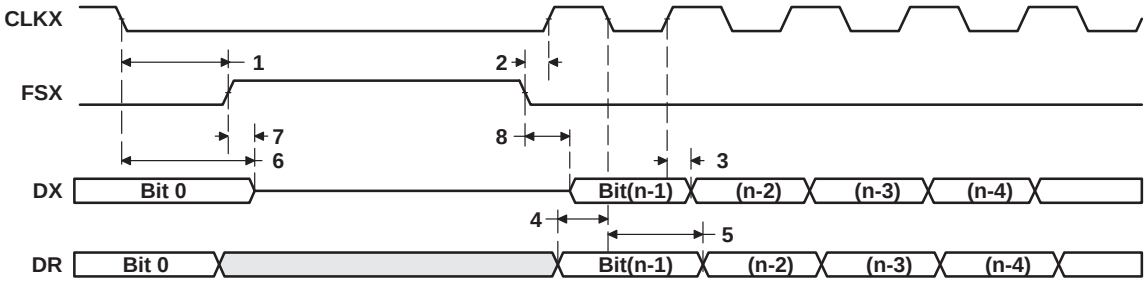

Figure 35. McBSP Timing as SPI Master or Slave: CLKSTP = 10b, CLKXP = 0

MULTICHANNEL BUFFERED SERIAL PORT TIMING (CONTINUED)

timing requirements for McBSP as SPI master or slave: CLKSTP = 11b, CLKXP = 0†‡ (see Figure 36)

NO.			−200				UNIT
			MASTER		SLAVE		
			MIN	MAX	MIN	MAX	
4	$t_{su(DRV-CKXH)}$	Setup time, DR valid before CLKX high	12		2 − 3P		ns
5	$t_{h(CKXH-DRV)}$	Hold time, DR valid after CLKX high	4		5 + 6P		ns

† P = 1/CPU clock frequency in ns. For example, when running parts at 200 MHz, use P = 5 ns.
‡ For all SPI slave modes, CLKG is programmed as 1/2 of the CPU clock by setting CLKSM = CLKGDV = 1.

switching characteristics over recommended operating conditions for McBSP as SPI master or slave: CLKSTP = 11b, CLKXP = 0†‡ (see Figure 36)

NO.	PARAMETER		−200				UNIT
			MASTER§		SLAVE		
			MIN	MAX	MIN	MAX	
1	$t_{h(CKXL-FXL)}$	Hold time, FSX low after CLKX low¶	L − 2	L + 3			ns
2	$t_{d(FXL-CKXH)}$	Delay time, FSX low to CLKX high#	T − 2	T + 3			ns
3	$t_{d(CKXL-DXV)}$	Delay time, CLKX low to DX valid	−2	4	3P + 4	5P + 17	ns
6	$t_{dis(CKXL-DXHZ)}$	Disable time, DX high impedance following last data bit from CLKX low	−2	4	3P + 3	5P + 17	ns
7	$t_{d(FXL-DXV)}$	Delay time, FSX low to DX valid	H − 2	H + 4	2P + 2	4P + 17	ns

† P = 1/CPU clock frequency in ns. For example, when running parts at 200 MHz, use P = 5 ns.
‡ For all SPI slave modes, CLKG is programmed as 1/2 of the CPU clock by setting CLKSM = CLKGDV = 1.
§ S = sample rate generator input clock = P if CLKSM = 1 (P = 1/CPU clock frequency)
= sample rate generator input clock = P_clks if CLKSM = 0 (P_clks = CLKS period)
T = CLKX period = (1 + CLKGDV) * S
H = CLKX high pulse width = (CLKGDV/2 + 1) * S if CLKGDV is even
= (CLKGDV + 1)/2 * S if CLKGDV is odd or zero
L = CLKX low pulse width = (CLKGDV/2) * S if CLKGDV is even
= (CLKGDV + 1)/2 * S if CLKGDV is odd or zero
¶ FSRP = FSXP = 1. As a SPI master, FSX is inverted to provide active-low slave-enable output. As a slave, the active-low signal input on FSX and FSR is inverted before being used internally.
CLKXM = FSXM = 1, CLKRM = FSRM = 0 for master McBSP
CLKXM = CLKRM = FSXM = FSRM = 0 for slave McBSP
# FSX should be low before the rising edge of clock to enable slave devices and then begin a SPI transfer at the rising edge of the master clock (CLKX).

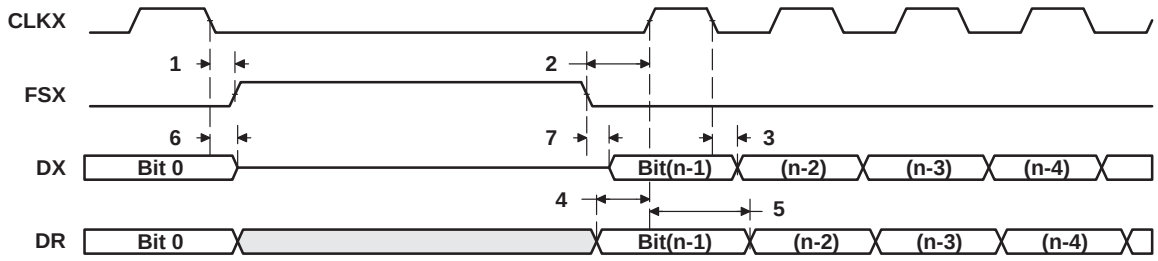

Figure 36. McBSP Timing as SPI Master or Slave: CLKSTP = 11b, CLKXP = 0

MULTICHANNEL BUFFERED SERIAL PORT TIMING (CONTINUED)

timing requirements for McBSP as SPI master or slave: CLKSTP = 10b, CLKXP = 1†‡ (see Figure 37)

NO.			−200				UNIT
			MASTER		SLAVE		
			MIN	MAX	MIN	MAX	
4	$t_{su(DRV-CKXH)}$	Setup time, DR valid before CLKX high	12		2 − 3P		ns
5	$t_{h(CKXH-DRV)}$	Hold time, DR valid after CLKX high	4		5 + 6P		ns

† P = 1/CPU clock frequency in ns. For example, when running parts at 200 MHz, use P = 5 ns.
‡ For all SPI slave modes, CLKG is programmed as 1/2 of the CPU clock by setting CLKSM = CLKGDV = 1.

switching characteristics over recommended operating conditions for McBSP as SPI master or slave: CLKSTP = 10b, CLKXP = 1†‡ (see Figure 37)

NO.	PARAMETER		−200				UNIT
			MASTER§		SLAVE		
			MIN	MAX	MIN	MAX	
1	$t_{h(CKXH-FXL)}$	Hold time, FSX low after CLKX high¶	T − 2	T + 3			ns
2	$t_{d(FXL-CKXL)}$	Delay time, FSX low to CLKX low#	H − 2	H + 3			ns
3	$t_{d(CKXL-DXV)}$	Delay time, CLKX low to DX valid	−2	4	3P + 4	5P + 17	ns
6	$t_{dis(CKXH-DXHZ)}$	Disable time, DX high impedance following last data bit from CLKX high	H − 2	H + 3			ns
7	$t_{dis(FXH-DXHZ)}$	Disable time, DX high impedance following last data bit from FSX high			P + 3	3P + 17	ns
8	$t_{d(FXL-DXV)}$	Delay time, FSX low to DX valid			2P + 2	4P + 17	ns

† P = 1/CPU clock frequency in ns. For example, when running parts at 200 MHz, use P = 5 ns.
‡ For all SPI slave modes, CLKG is programmed as 1/2 of the CPU clock by setting CLKSM = CLKGDV = 1.
§ S = sample rate generator input clock = P if CLKSM = 1 (P = 1/CPU clock frequency)
= sample rate generator input clock = P_clks if CLKSM = 0 (P_clks = CLKS period)
T = CLKX period = (1 + CLKGDV) * S
H = CLKX high pulse width = (CLKGDV/2 + 1) * S if CLKGDV is even
= (CLKGDV + 1)/2 * S if CLKGDV is odd or zero
L = CLKX low pulse width = (CLKGDV/2) * S if CLKGDV is even
= (CLKGDV + 1)/2 * S if CLKGDV is odd or zero
¶ FSRP = FSXP = 1. As a SPI master, FSX is inverted to provide active-low slave-enable output. As a slave, the active-low signal input on FSX and FSR is inverted before being used internally.
CLKXM = FSXM = 1, CLKRM = FSRM = 0 for master McBSP
CLKXM = CLKRM = FSXM = FSRM = 0 for slave McBSP
# FSX should be low before the rising edge of clock to enable slave devices and then begin a SPI transfer at the rising edge of the master clock (CLKX).

MULTICHANNEL BUFFERED SERIAL PORT TIMING (CONTINUED)

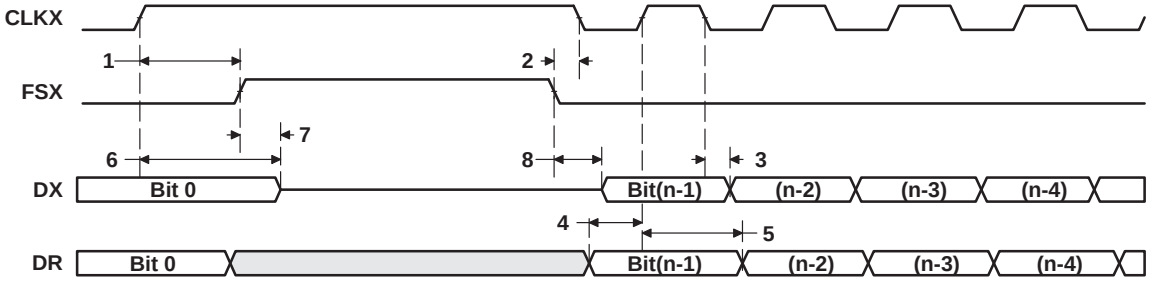

Figure 37. McBSP Timing as SPI Master or Slave: CLKSTP = 10b, CLKXP = 1

MULTICHANNEL BUFFERED SERIAL PORT TIMING (CONTINUED)

timing requirements for McBSP as SPI master or slave: CLKSTP = 11b, CLKXP = 1†‡ (see Figure 38)

NO.			−200				UNIT
			MASTER		SLAVE		
			MIN	MAX	MIN	MAX	
4	$t_{su(DRV-CKXL)}$	Setup time, DR valid before CLKX low	12		2 − 3P		ns
5	$t_{h(CKXL-DRV)}$	Hold time, DR valid after CLKX low	4		5 + 6P		ns

† P = 1/CPU clock frequency in ns. For example, when running parts at 200 MHz, use P = 5 ns.
‡ For all SPI slave modes, CLKG is programmed as 1/2 of the CPU clock by setting CLKSM = CLKGDV = 1.

switching characteristics over recommended operating conditions for McBSP as SPI master or slave: CLKSTP = 11b, CLKXP = 1†‡ (see Figure 38)

NO.	PARAMETER		−200				UNIT
			MASTER§		SLAVE		
			MIN	MAX	MIN	MAX	
1	$t_{h(CKXH-FXL)}$	Hold time, FSX low after CLKX high¶	H − 2	H + 3			ns
2	$t_{d(FXL-CKXL)}$	Delay time, FSX low to CLKX low#	T − 2	T + 1			ns
3	$t_{d(CKXH-DXV)}$	Delay time, CLKX high to DX valid	−2	4	3P + 4	5P + 17	ns
6	$t_{dis(CKXH-DXHZ)}$	Disable time, DX high impedance following last data bit from CLKX high	−2	4	3P + 3	5P + 17	ns
7	$t_{d(FXL-DXV)}$	Delay time, FSX low to DX valid	L − 2	L + 4	2P + 2	4P + 17	ns

† P = 1/CPU clock frequency in ns. For example, when running parts at 200 MHz, use P = 5 ns.
‡ For all SPI slave modes, CLKG is programmed as 1/2 of the CPU clock by setting CLKSM = CLKGDV = 1.
§ S = sample rate generator input clock = P if CLKSM = 1 (P = 1/CPU clock frequency)
= sample rate generator input clock = P_clks if CLKSM = 0 (P_clks = CLKS period)
T = CLKX period = (1 + CLKGDV) * S
H = CLKX high pulse width = (CLKGDV/2 + 1) * S if CLKGDV is even
= (CLKGDV + 1)/2 * S if CLKGDV is odd or zero
L = CLKX low pulse width = (CLKGDV/2) * S if CLKGDV is even
= (CLKGDV + 1)/2 * S if CLKGDV is odd or zero
¶ FSRP = FSXP = 1. As a SPI master, FSX is inverted to provide active-low slave-enable output. As a slave, the active-low signal input on FSX and FSR is inverted before being used internally.
CLKXM = FSXM = 1, CLKRM = FSRM = 0 for master McBSP
CLKXM = CLKRM = FSXM = FSRM = 0 for slave McBSP
# FSX should be low before the rising edge of clock to enable slave devices and then begin a SPI transfer at the rising edge of the master clock (CLKX).

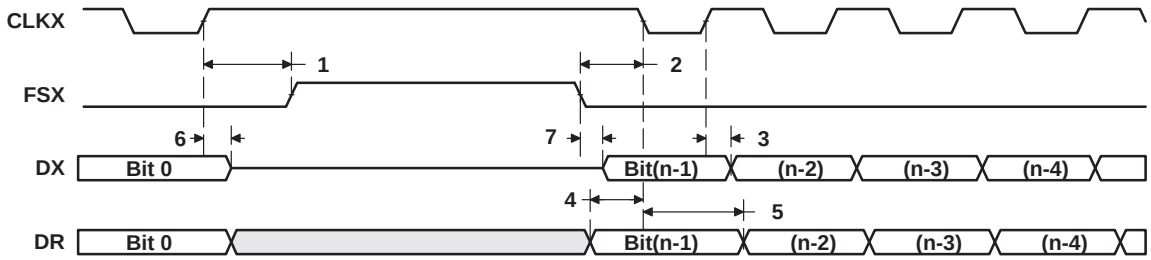

Figure 38. McBSP Timing as SPI Master or Slave: CLKSTP = 11b, CLKXP = 1

DMAC, TIMER, POWER-DOWN TIMING

switching characteristics over recommended operating conditions for DMAC outputs† (see Figure 39)

NO.	PARAMETER		−200		UNIT
			MIN	MAX	
1	$t_{w(DMACH)}$	Pulse duration, DMAC high	2P−3		ns

† P = 1/CPU clock frequency in ns. For example, when running parts at 200 MHz, use P = 5 ns.

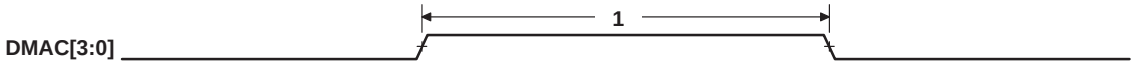

Figure 39. DMAC Timing

timing requirements for timer inputs† (see Figure 40)

NO.			−200		UNIT
			MIN	MAX	
1	$t_{w(TINPH)}$	Pulse duration, TINP high	2P		ns
2	$t_{w(TINPL)}$	Pulse duration, TINP low	2P		ns

† P = 1/CPU clock frequency in ns. For example, when running parts at 200 MHz, use P = 5 ns.

switching characteristics over recommended operating conditions for timer outputs† (see Figure 40)

NO.	PARAMETER		−200		UNIT
			MIN	MAX	
3	$t_{w(TOUTH)}$	Pulse duration, TOUT high	2P−3		ns
4	$t_{w(TOUTL)}$	Pulse duration, TOUT low	2P−3		ns

† P = 1/CPU clock frequency in ns. For example, when running parts at 200 MHz, use P = 5 ns.

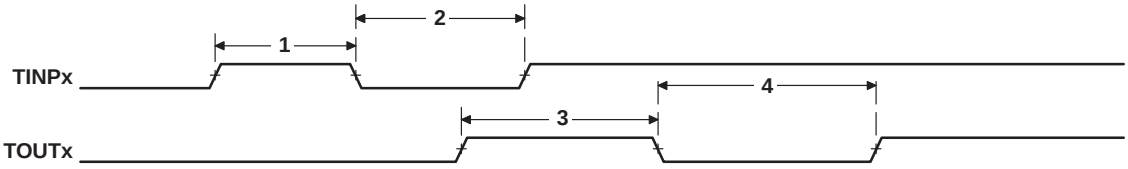

Figure 40. Timer Timing

DMAC, TIMER, POWER-DOWN TIMING (CONTINUED)

switching characteristics over recommended operating conditions for power-down outputs† (see Figure 41)

NO.	PARAMETER		−200		UNIT
			MIN	MAX	
1	$t_{w(PDH)}$	Pulse duration, PD high	2P		ns

† P = 1/CPU clock frequency in ns. For example, when running parts at 200 MHz, use P = 5 ns.

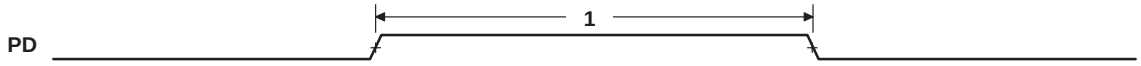

Figure 41. Power-Down Timing

JTAG TEST-PORT TIMING

timing requirements for JTAG test port (see Figure 42)

NO.			−200		UNIT
			MIN	MAX	
1	$t_{c(TCK)}$	Cycle time, TCK	35		ns
3	$t_{su(TDIV-TCKH)}$	Setup time, TDI/TMS/$\overline{TRST}$ valid before TCK high	11		ns
4	$t_{h(TCKH-TDIV)}$	Hold time, TDI/TMS/$\overline{TRST}$ valid after TCK high	9		ns

switching characteristics over recommended operating conditions for JTAG test port (see Figure 42)

NO.	PARAMETER		−200		UNIT
			MIN	MAX	
2	$t_{d(TCKL-TDOV)}$	Delay time, TCK low to TDO valid	−4.5	12	ns

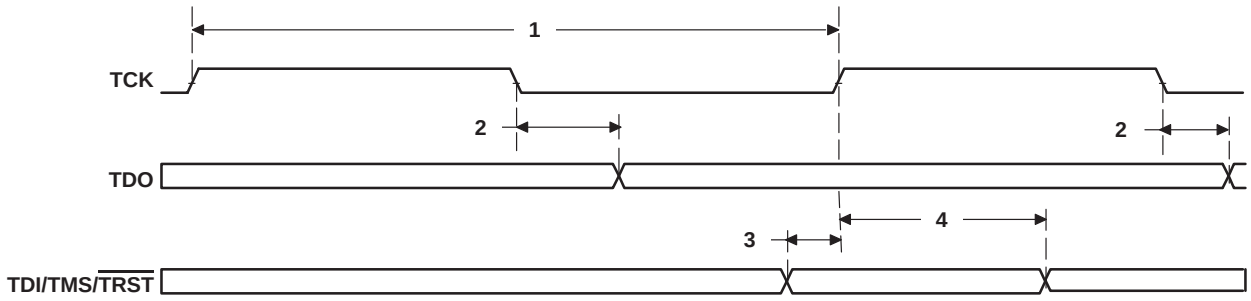

Figure 42. JTAG Test-Port Timing

MECHANICAL DATA FOR TMS320C6205

The following table(s) show the thermal resistance characteristics for the S−PBGA mechanical package.

thermal resistance characteristics (S-PBGA package) (GHK)

NO			°C/W	Air Flow (m/s†)
1	$R\Theta_{JC}$	Junction-to-case	9.5	N/A
2	$R\Theta_{JA}$	Junction-to-free air	26.5	0.00
3	$R\Theta_{JA}$	Junction-to-free air	23.9	0.50
4	$R\Theta_{JA}$	Junction-to-free air	22.6	1.00
5	$R\Theta_{JA}$	Junction-to-free air	21.3	2.00

† m/s = meters per second

thermal resistance characteristics (S-PBGA package) (ZHK)

NO			°C/W	Air Flow (m/s†)
1	$R\Theta_{JC}$	Junction-to-case	9.5	N/A
2	$R\Theta_{JA}$	Junction-to-free air	26.5	0.00
3	$R\Theta_{JA}$	Junction-to-free air	23.9	0.50
4	$R\Theta_{JA}$	Junction-to-free air	22.6	1.00
5	$R\Theta_{JA}$	Junction-to-free air	21.3	2.00

† m/s = meters per second

packaging information

The following packaging information and addendum reflect the most current released data available for the designated device(s). This data is subject to change without notice and without revision of this document.

PACKAGING INFORMATION

Orderable part number	Status (1)	Material type (2)	Package | Pins	Package qty | Carrier	RoHS (3)	Lead finish/ Ball material (4)	MSL rating/ Peak reflow (5)	Op temp (°C)	Part marking (6)
TMS320C6205DGWT200	Obsolete	Production	NFBGA (GWT) | 288	-	-	Call TI	Call TI	0 to 90	TMS 320C6205DGWT 200
TMS320C6205DZHK200	Obsolete	Production	BGA MICROSTAR (ZHK) | 288	-	-	Call TI	Call TI	0 to 90	320C6205DZHK 200 TMS
TMS320C6205DZWT200	Obsolete	Production	NFBGA (ZWT) | 288	-	-	Call TI	Call TI	0 to 90	TMS 320C6205DZWT 200
TMS320C6205GHKA200	Obsolete	Production	BGA MICROSTAR (GHK) | 288	-	-	Call TI	Call TI	-40 to 105	C6205GHK200 A TMS320
TMS320C6205GWT200	Obsolete	Production	NFBGA (GWT) | 288	-	-	Call TI	Call TI	0 to 90	TMS 320C6205GWT 200
TMS320C6205GWTA200	Obsolete	Production	NFBGA (GWT) | 288	-	-	Call TI	Call TI	-40 to 105	TMS320 C6205GWT200 A
TMS320C6205ZHK200	Obsolete	Production	BGA MICROSTAR (ZHK) | 288	-	-	Call TI	Call TI	0 to 90	320C6205ZHK 200 TMS
TMS320C6205ZHK200.B	Obsolete	Production	BGA MICROSTAR (ZHK) | 288	-	-	Call TI	Call TI	-40 to 105	
TMS320C6205ZWT200	Obsolete	Production	NFBGA (ZWT) | 288	-	-	Call TI	Call TI	0 to 90	TMS 320C6205ZWT 200
TMS32C6205DGWTA200	Obsolete	Production	NFBGA (GWT) | 288	-	-	Call TI	Call TI	-40 to 105	TMS320 C6205DGWT200 A
TMS32C6205DZWTA200	Obsolete	Production	NFBGA (ZWT) | 288	-	-	Call TI	Call TI	-40 to 105	TMS320 C6205DZWT200 A

(1) **Status:** For more details on status, see our product life cycle.

(2) **Material type:** When designated, preproduction parts are prototypes/experimental devices, and are not yet approved or released for full production. Testing and final process, including without limitation quality assurance, reliability performance testing, and/or process qualification, may not yet be complete, and this item is subject to further changes or possible discontinuation. If available for ordering, purchases will be subject to an additional waiver at checkout, and are intended for early internal evaluation purposes only. These items are sold without warranties of any kind.

(3) **RoHS values:** Yes, No, RoHS Exempt. See the TI RoHS Statement for additional information and value definition.

(4) **Lead finish/Ball material:** Parts may have multiple material finish options. Finish options are separated by a vertical ruled line. Lead finish/Ball material values may wrap to two lines if the finish value exceeds the maximum column width.

(5) **MSL rating/Peak reflow:** The moisture sensitivity level ratings and peak solder (reflow) temperatures. In the event that a part has multiple moisture sensitivity ratings, only the lowest level per JEDEC standards is shown. Refer to the shipping label for the actual reflow temperature that will be used to mount the part to the printed circuit board.

(6) **Part marking:** There may be an additional marking, which relates to the logo, the lot trace code information, or the environmental category of the part.

Multiple part markings will be inside parentheses. Only one part marking contained in parentheses and separated by a "~" will appear on a part. If a line is indented then it is a continuation of the previous line and the two combined represent the entire part marking for that device.

Important Information and Disclaimer: The information provided on this page represents TI's knowledge and belief as of the date that it is provided. TI bases its knowledge and belief on information provided by third parties, and makes no representation or warranty as to the accuracy of such information. Efforts are underway to better integrate information from third parties. TI has taken and continues to take reasonable steps to provide representative and accurate information but may not have conducted destructive testing or chemical analysis on incoming materials and chemicals. TI and TI suppliers consider certain information to be proprietary, and thus CAS numbers and other limited information may not be available for release.

In no event shall TI's liability arising out of such information exceed the total purchase price of the TI part(s) at issue in this document sold by TI to Customer on an annual basis.

GHK (S–PBGA–N288) PLASTIC BALL GRID ARRAY

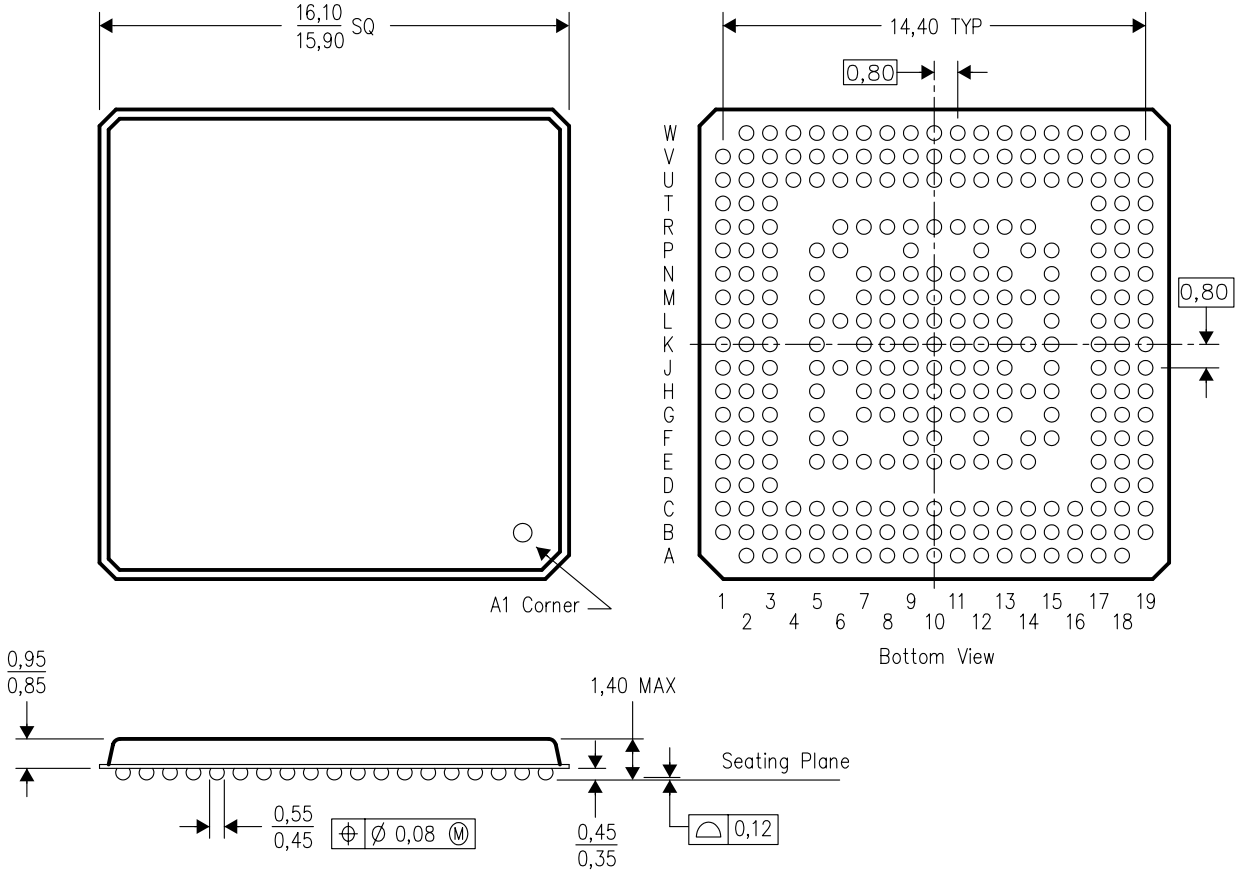

NOTES: A. All linear dimensions are in millimeters.
B. This drawing is subject to change without notice.

PACKAGE OUTLINE

GWT0288A

NFBGA - 1.4 mm max height

PLASTIC BALL GRID ARRAY

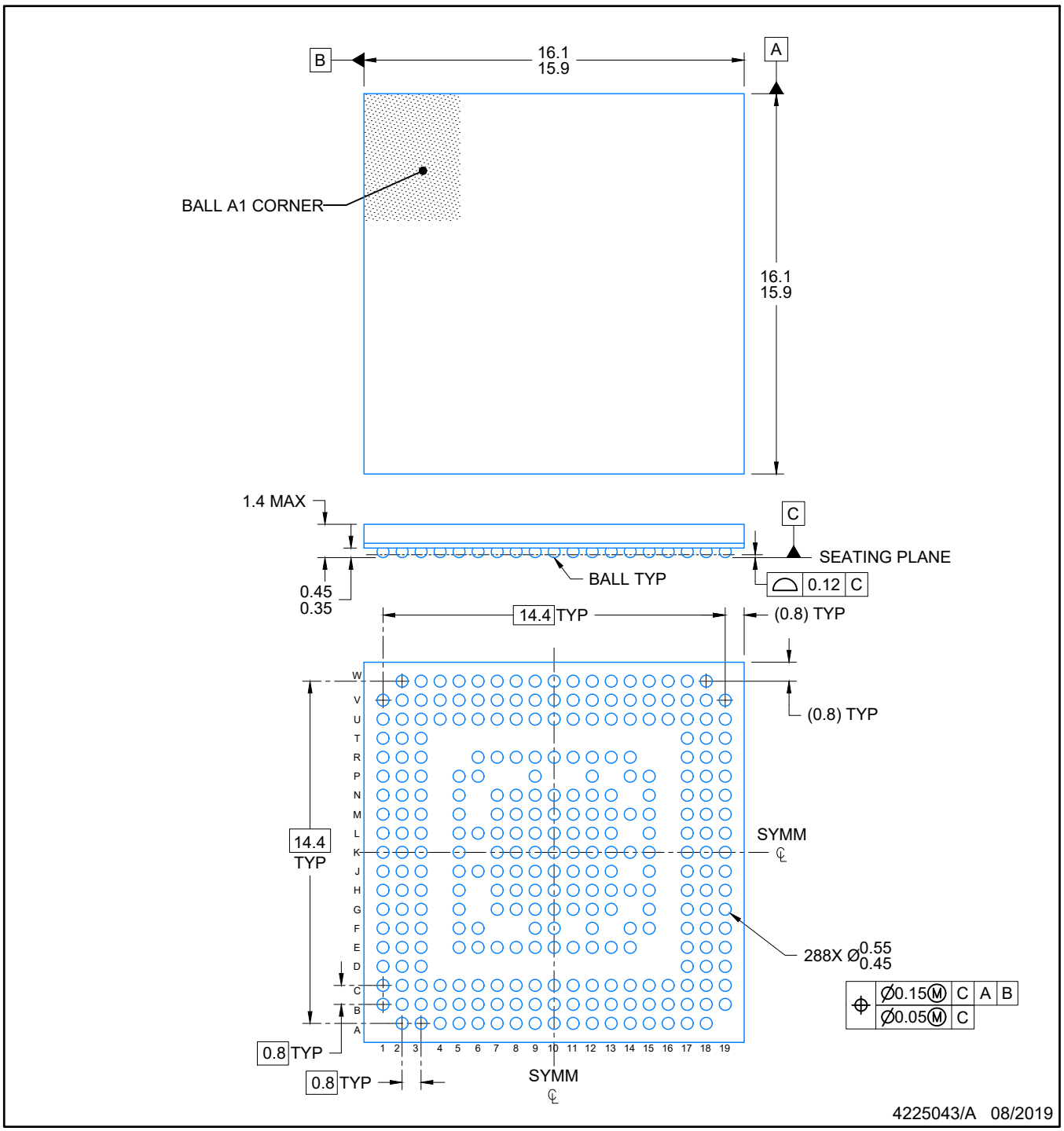

NOTES:

NanoFree is a trademark of Texas Instruments.

1. All linear dimensions are in millimeters. Any dimensions in parenthesis are for reference only. Dimensioning and tolerancing per ASME Y14.5M.
2. This drawing is subject to change without notice.

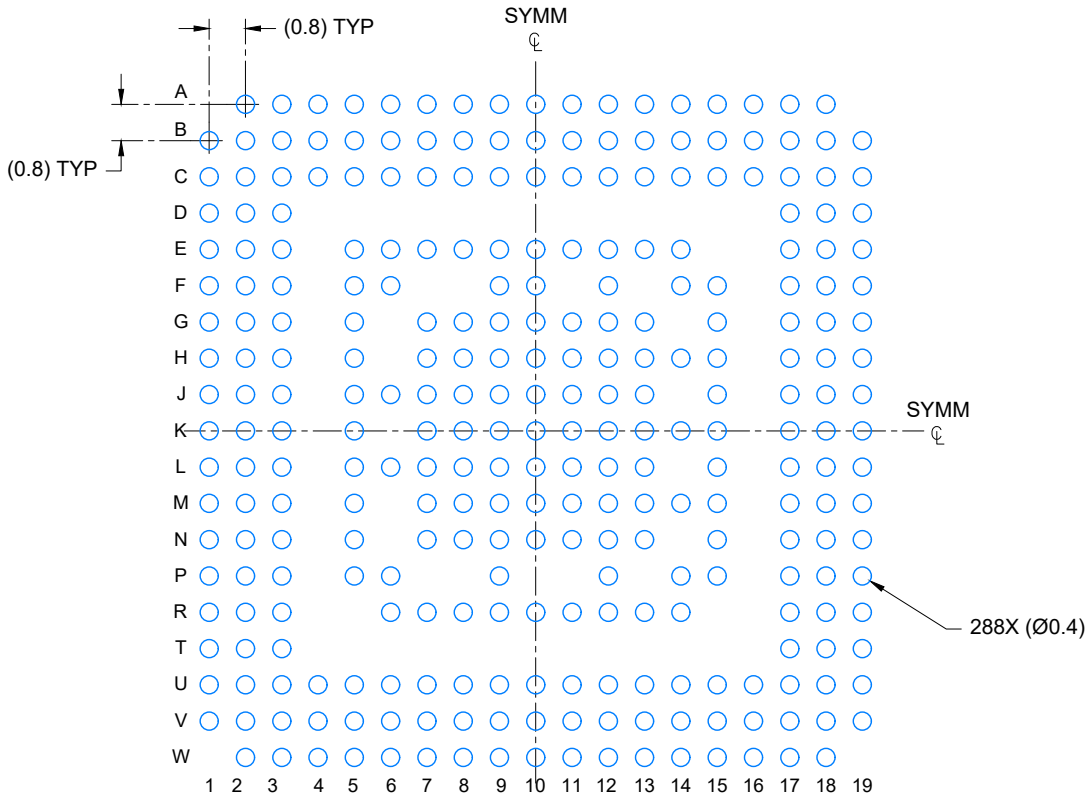

LAND PATTERN EXAMPLE

SCALE: 6X

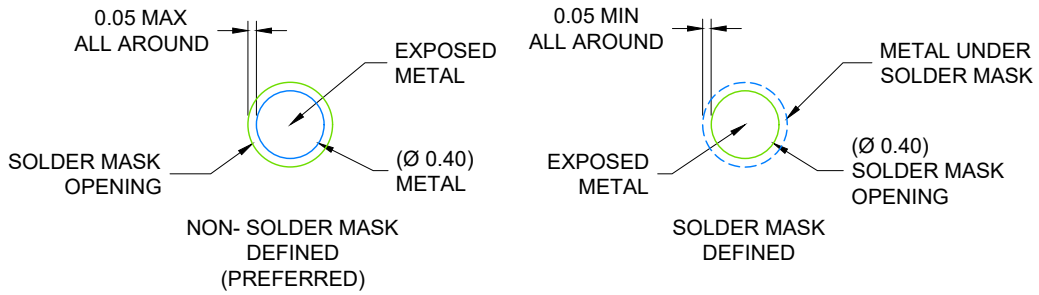

SOLDER MASK DETAILS

NOT TO SCALE

4225043/A 08/2019

NOTES: (continued)

3. Final dimensions may vary due to manufacturing tolerance considerations and also routing constraints. Refer to Texas Instruments Literature number SNVA009 (www.ti.com/lit/snva009).

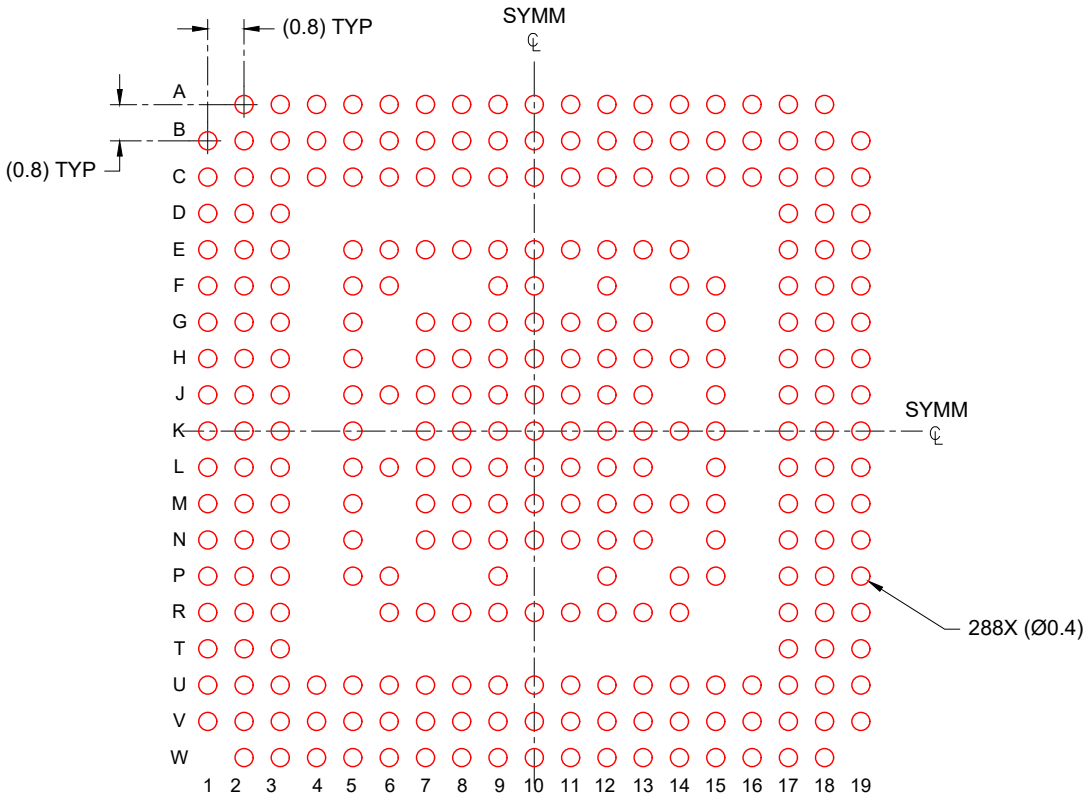

SOLDER PASTE EXAMPLE
BASED ON 0.150 mm THICK STENCIL
SCALE: 6X

4225043/A 08/2019

NOTES: (continued)

4. Laser cutting apertures with trapezoidal walls and rounded corners may offer better paste release.

PACKAGE OUTLINE

ZWT0288A

NFBGA - 1.4 mm max height

PLASTIC BALL GRID ARRAY

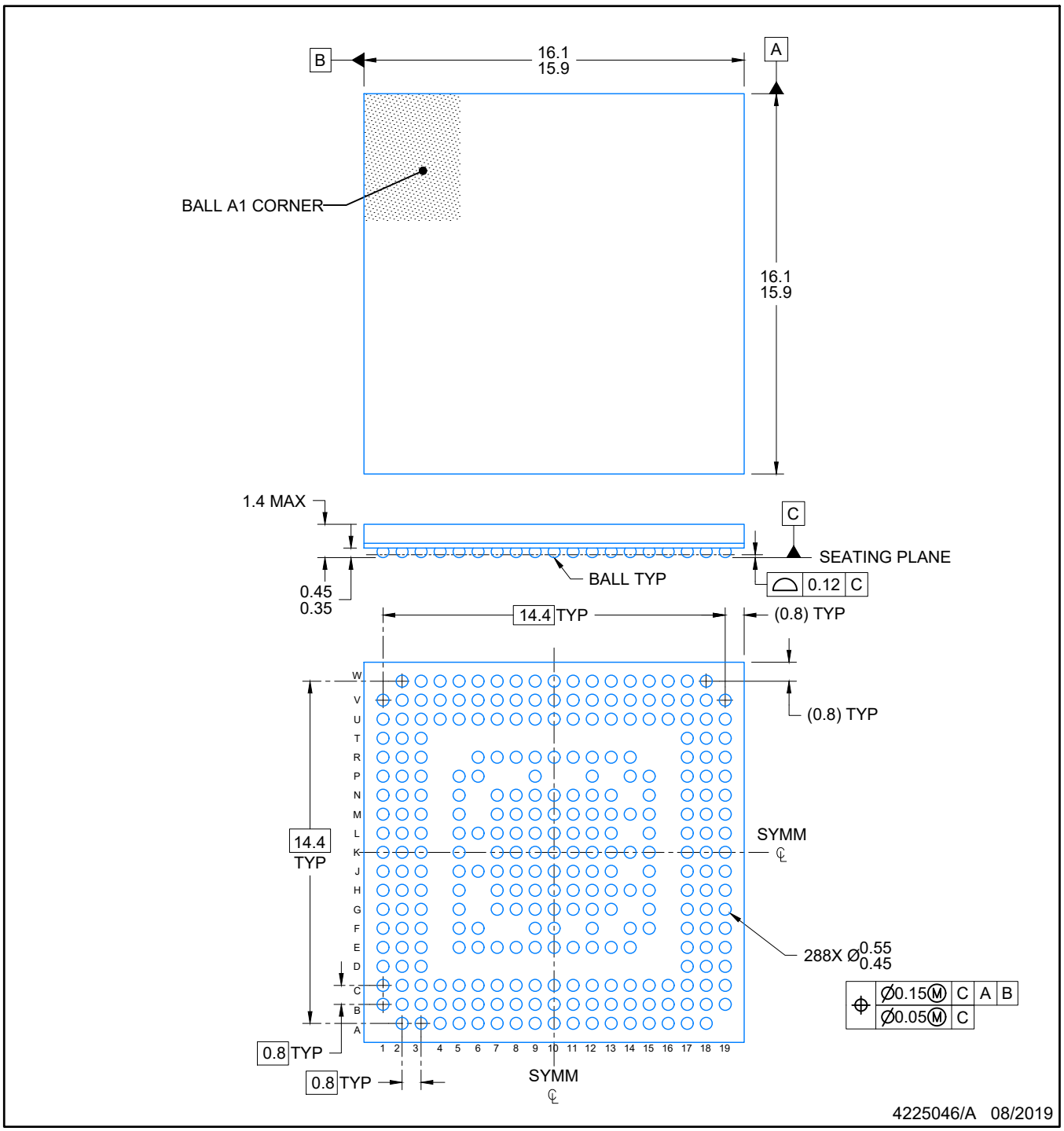

NOTES:

NanoFree is a trademark of Texas Instruments.

1. All linear dimensions are in millimeters. Any dimensions in parenthesis are for reference only. Dimensioning and tolerancing per ASME Y14.5M.
2. This drawing is subject to change without notice.

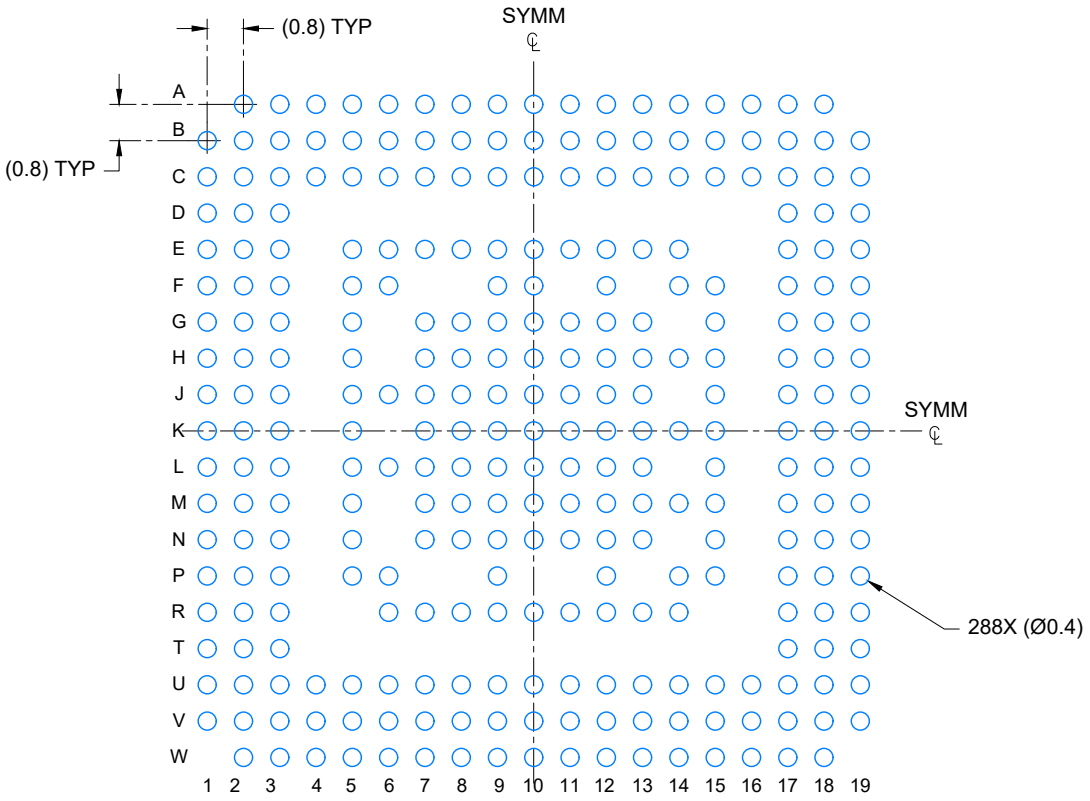

LAND PATTERN EXAMPLE

SCALE: 6X

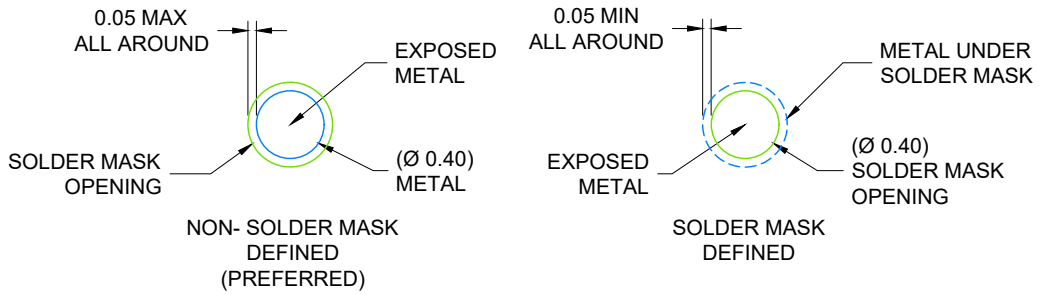

SOLDER MASK DETAILS

NOT TO SCALE

4225046/A 08/2019

NOTES: (continued)

3. Final dimensions may vary due to manufacturing tolerance considerations and also routing constraints. Refer to Texas Instruments Literature number SNVA009 (www.ti.com/lit/snva009).

EXAMPLE STENCIL DESIGN

NFBGA - 1.4 mm max height

PLASTIC BALL GRID ARRAY

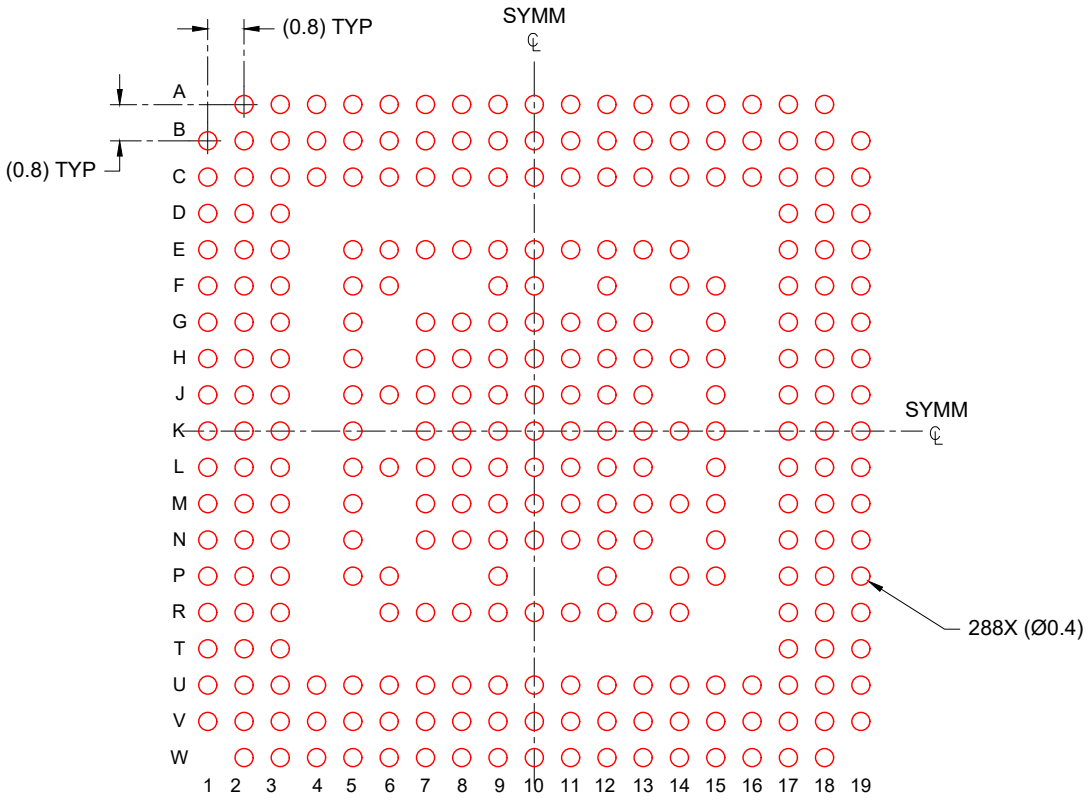

SOLDER PASTE EXAMPLE
BASED ON 0.150 mm THICK STENCIL
SCALE: 6X

4225046/A 08/2019

NOTES: (continued)

4. Laser cutting apertures with trapezoidal walls and rounded corners may offer better paste release.

ZHK (S–PBGA–N288) PLASTIC BALL GRID ARRAY

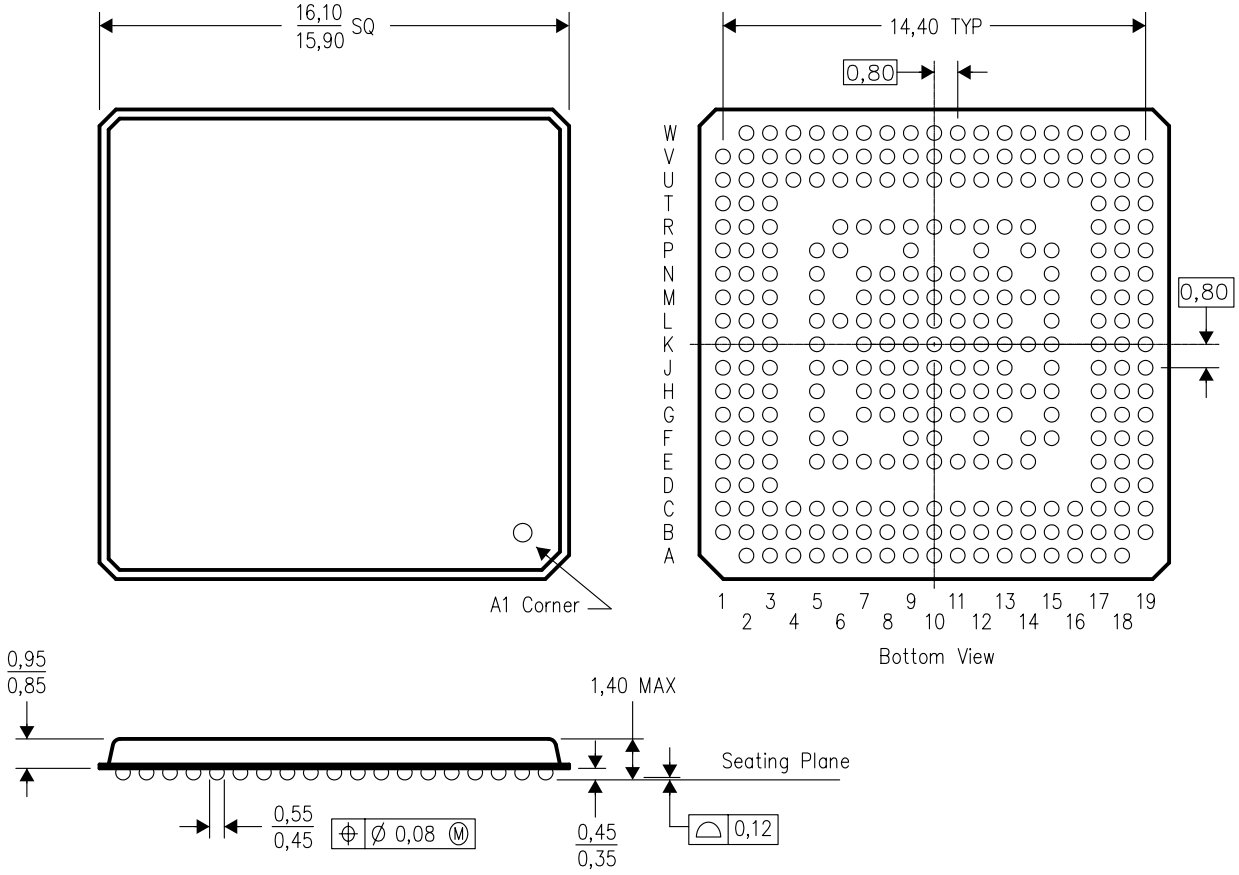

NOTES:
A. All linear dimensions are in millimeters.
B. This drawing is subject to change without notice.
C. This is a lead–free solder ball design.

IMPORTANT NOTICE AND DISCLAIMER

TI PROVIDES TECHNICAL AND RELIABILITY DATA (INCLUDING DATASHEETS), DESIGN RESOURCES (INCLUDING REFERENCE DESIGNS), APPLICATION OR OTHER DESIGN ADVICE, WEB TOOLS, SAFETY INFORMATION, AND OTHER RESOURCES “AS IS” AND WITH ALL FAULTS, AND DISCLAIMS ALL WARRANTIES, EXPRESS AND IMPLIED, INCLUDING WITHOUT LIMITATION ANY IMPLIED WARRANTIES OF MERCHANTABILITY, FITNESS FOR A PARTICULAR PURPOSE OR NON-INFRINGEMENT OF THIRD PARTY INTELLECTUAL PROPERTY RIGHTS.

These resources are intended for skilled developers designing with TI products. You are solely responsible for (1) selecting the appropriate TI products for your application, (2) designing, validating and testing your application, and (3) ensuring your application meets applicable standards, and any other safety, security, regulatory or other requirements.

These resources are subject to change without notice. TI grants you permission to use these resources only for development of an application that uses the TI products described in the resource. Other reproduction and display of these resources is prohibited. No license is granted to any other TI intellectual property right or to any third party intellectual property right. TI disclaims responsibility for, and you fully indemnify TI and its representatives against any claims, damages, costs, losses, and liabilities arising out of your use of these resources.

TI’s products are provided subject to TI’s Terms of Sale, TI’s General Quality Guidelines, or other applicable terms available either on ti.com or provided in conjunction with such TI products. TI’s provision of these resources does not expand or otherwise alter TI’s applicable warranties or warranty disclaimers for TI products. Unless TI explicitly designates a product as custom or customer-specified, TI products are standard, catalog, general purpose devices.

TI objects to and rejects any additional or different terms you may propose.

Copyright © 2026, Texas Instruments Incorporated

Last updated 10/2025

Looking for pricing, stock, or lifecycle information?

Click below to explore more details on WIN SOURCE:

- View TMS320C6205ZWT200 on WIN SOURCE
- Texas Instruments Information

Optimize Your Supply Chain with WIN SOURCE Solutions

- Global Sourcing Solution
- Obsolete Management
- Cost Control Management
- Shortage Management
- Alternative Solution
- Excess Inventory Management