THE DATASHEET OF

TMS320C6203BGNY17C

www.win-source.net 0086-755-83957316

- **High-Performance Fixed-Point Digital Signal Processor (DSP) – TMS320C62x™**
  - **4-, 3.33-ns Instruction Cycle Time**
  - **250-, 300-MHz Clock Rate**
  - **Eight 32-Bit Instructions/Cycle**
  - **2000, 2400 MIPS**
- **C6203B and C6202 GLS Ball Grid Array (BGA) Packages are Pin-Compatible With the C6204 GLW BGA Package†**
- **C6203B and C6202B GNZ and GNY Packages are Pin-Compatible**
- **VelociTI™ Advanced Very-Long-Instruction-Word (VLIW) C62x™ DSP Core**
  - **Eight Highly Independent Functional Units:**
    - **Six ALUs (32-/40-Bit)**
    - **Two 16-Bit Multipliers (32-Bit Result)**
  - **Load-Store Architecture With 32 32-Bit General-Purpose Registers**
  - **Instruction Packing Reduces Code Size**
  - **All Instructions Conditional**
- **Instruction Set Features**
  - **Byte-Addressable (8-, 16-, 32-Bit Data)**
  - **8-Bit Overflow Protection**
  - **Saturation**
  - **Bit-Field Extract, Set, Clear**
  - **Bit-Counting**
  - **Normalization**
- **7M-Bit On-Chip SRAM**
  - **3M-Bit Internal Program/Cache (96K 32-Bit Instructions)**
  - **4M-Bit Dual-Access Internal Data (512K Bytes)**
    - **Organized as Two 256K-Byte Blocks for Improved Concurrency**
- **32-Bit External Memory Interface (EMIF)**
  - **Glueless Interface to Synchronous Memories: SDRAM or SBSRAM**
  - **Glueless Interface to Asynchronous Memories: SRAM and EPROM**
  - **52M-Byte Addressable External Memory Space**
- **Four-Channel Bootloading Direct-Memory-Access (DMA) Controller With an Auxiliary Channel**
- **Flexible Phase-Locked-Loop (PLL) Clock Generator**
- **32-Bit Expansion Bus (XBus)**
  - **Glueless/Low-Glue Interface to Popular PCI Bridge Chips**
  - **Glueless/Low-Glue Interface to Popular Synchronous or Asynchronous Microprocessor Buses**
  - **Master/Slave Functionality**
  - **Glueless Interface to Synchronous FIFOs and Asynchronous Peripherals**
- **Three Multichannel Buffered Serial Ports (McBSPs)**
  - **Direct Interface to T1/E1, MVIP, SCSA Framers**
  - **ST-Bus-Switching Compatible**
  - **Up to 256 Channels Each**
  - **AC97-Compatible**
  - **Serial-Peripheral Interface (SPI) Compatible (Motorola™)**
- **Two 32-Bit General-Purpose Timers**
- **IEEE-1149.1 (JTAG‡) Boundary-Scan-Compatible**
- **352-Pin BGA Package (GNZ)**
- **384-Pin BGA Package (GLS)**
- **384-Pin BGA Package (GNY)**
- **0.15-μm/5-Level Metal Process**
  - **CMOS Technology**
- **3.3-V I/Os, 1.5-V Internal**



Please be aware that an important notice concerning availability, standard warranty, and use in critical applications of Texas Instruments semiconductor products and disclaimers thereto appears at the end of this data sheet.

TMS320C62x, VelociTI, and C62x are trademarks of Texas Instruments.
Motorola is a trademark of Motorola, Inc.
All trademarks are the property of their respective owners.
† For more details, see the GLS BGA package bottom view.
‡ IEEE Standard 1149.1-1990 Standard-Test-Access Port and Boundary Scan Architecture.

PRODUCTION DATA information is current as of publication date. Products conform to specifications per the terms of Texas Instruments standard warranty. Production processing does not necessarily include testing of all parameters.

Copyright © 2004, Texas Instruments Incorporated

Table of Contents

GNZ, GLS, and GNY BGA packages (bottom view) 2
description 4
device characteristics 4
C62x device compatibility 6
functional and CPU (DSP core) block diagram 7
CPU (DSP core) description 8
memory map summary 10
peripheral register descriptions 11
DMA synchronization events 15
interrupt sources and interrupt selector 16
signal groups description 17
signal descriptions 20
development support 31
documentation support 34
clock PLL 35
power-down mode logic 37
power-supply sequencing 41
IEEE 1149.1 JTAG compatibility statement 42
absolute maximum ratings over operating case temperature ranges 43
recommended operating conditions 43
electrical characteristics over recommended ranges of supply voltage and operating case temperature . . 43
parameter measurement information 44
signal transition levels 44
timing parameters and board routing analysis 45
input and output clocks 47
asynchronous memory timing 50
synchronous-burst memory timing 53
synchronous DRAM timing 57
$\overline{\text{HOLD}}$/$\overline{\text{HOLDA}}$ timing 64
reset timing 65
external interrupt timing 67
expansion bus synchronous FIFO timing 68
expansion bus asynchronous peripheral timing 70
expansion bus synchronous host-port timing 73
expansion bus asynchronous host-port timing 79
XHOLD/XHOLDA timing 81
multichannel buffered serial port timing 83
DMAC, timer, power-down timing 95
JTAG test-port timing 97
mechanical data 98
revision history 101

GNZ, GLS, and GNY BGA packages (bottom view)

GNZ 352-PIN BALL GRID ARRAY (BGA) PACKAGE (BOTTOM VIEW)

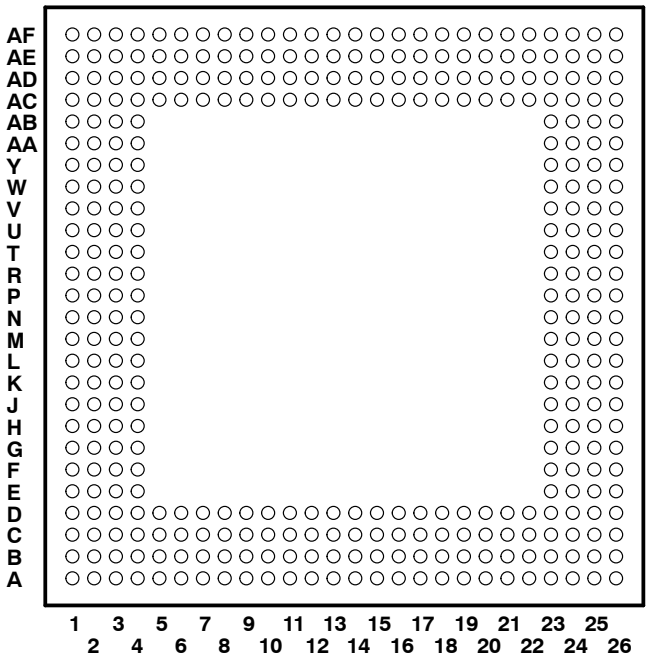

GNZ, GLS, and GNY BGA packages (bottom view) (continued)

GLS 384-PIN BGA PACKAGE (BOTTOM VIEW)

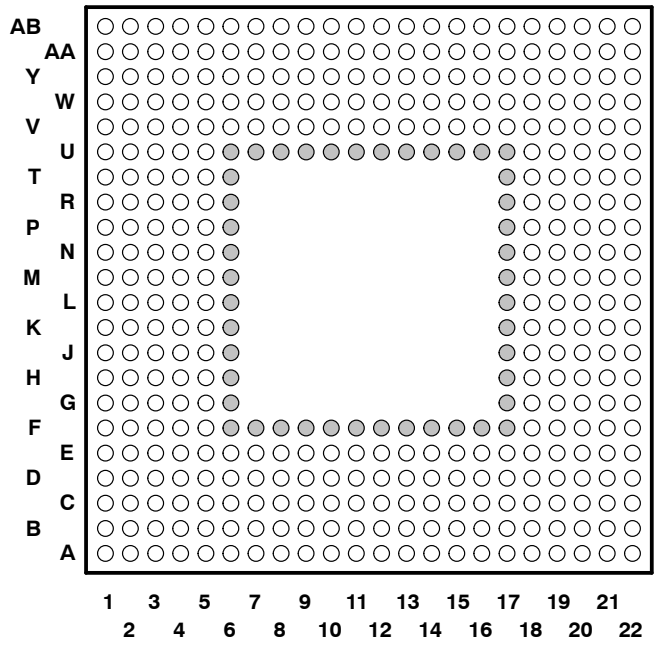

The C6203B and C6202 GLS BGA packages are pin-compatible with the C6204 GLW package except that the inner row of balls (which are additional power and ground pins) are removed for the C6204 GLW package.

○ **These balls are *NOT* applicable for the C6204 devices 340-pin GLW BGA package.**

GNY 384-PIN BGA PACKAGE (BOTTOM VIEW)

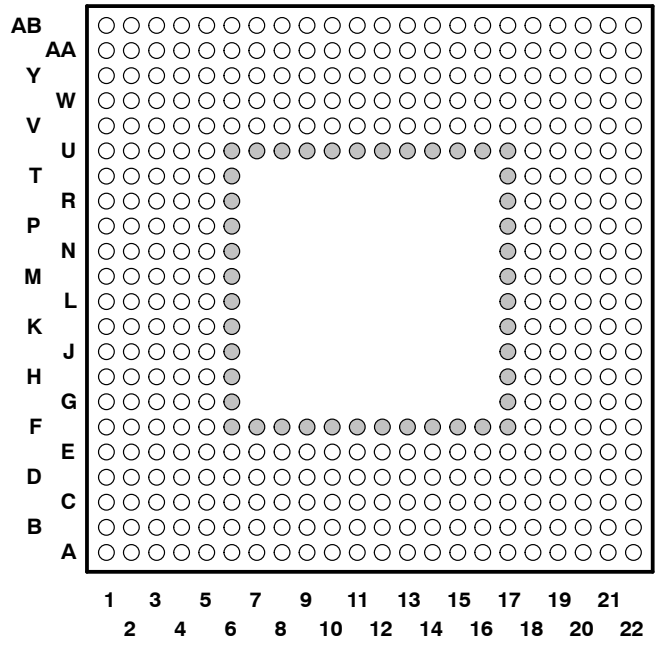

description

The TMS320C6203B device is part of the TMS320C62x™ fixed-point DSP generation in the TMS320C6000™ DSP platform. The C62x™ DSP devices are based on the high-performance, advanced VelociTI™ very-long-instruction-word (VLIW) architecture developed by Texas Instruments (TI), making these DSPs an excellent choice for multichannel and multifunction applications.

The TMS320C62x™ DSP offers cost-effective solutions to high-performance DSP-programming challenges. The TMS320C6203B has a performance capability of up to 2400 MIPS at a clock rate of 300 MHz. The C6203B DSP possesses the operational flexibility of high-speed controllers and the numerical capability of array processors. This processor has 32 general-purpose registers of 32-bit word length and eight highly independent functional units. The eight functional units provide six arithmetic logic units (ALUs) for a high degree of parallelism and two 16-bit multipliers for a 32-bit result. The C6203B can produce two multiply-accumulates (MACs) per cycle for a total of 600 million MACs per second (MMACS). The C6203B DSP also has application-specific hardware logic, on-chip memory, and additional on-chip peripherals.

The C6203B device program memory consists of two blocks, with a 256K-byte block configured as memory-mapped program space, and the other 128K-byte block user-configurable as cache or memory-mapped program space. Data memory for the C6203B consists of two 256K-byte blocks of RAM.

The C6203B device has a powerful and diverse set of peripherals. The peripheral set includes three multichannel buffered serial ports (McBSPs), two general-purpose timers, a 32-bit expansion bus (XBus) that offers ease of interface to synchronous or asynchronous industry-standard host bus protocols, and a glueless 32-bit external memory interface (EMIF) capable of interfacing to SDRAM or SBSRAM and asynchronous peripherals.

The C62x devices have a complete set of development tools which includes: a new C compiler, an assembly optimizer to simplify programming and scheduling, and a Windows™ debugger interface for visibility into source code execution.

device characteristics

Table 1 provides an overview of the TMS320C6203B, TMS320C6202, TMS320C6202B, and TMS320C6204 DSPs. The table shows significant features of each device, including the capacity of on-chip RAM, the peripherals, the execution time, and the package type with pin count, etc. This data sheet primarily focuses on the functionality of the TMS320C6203B device although it also identifies to the user the pin-compatibility of the C6203B and C6202 GLS, and the C6204 GLW BGA packages. This data sheet identifies the pin-compatibility of the C6203B and the C6202B GNZ and GNY packages. For the functionality information on the TMS320C6202/02B devices, see the *TMS320C6202, TMS320C6202B Fixed-Point Digital Signal Processors Data Sheet* (literature number SPRS104). For the functionality information on the TMS320C6204 device, see the *TMS320C6204 Fixed-Point Digital Signal Processor Data Sheet* (literature number SPRS152). And for more details on the C6000™ DSP part numbering, see Figure 4.

TMS320C6000 and C6000 are trademarks of Texas Instruments.
Windows is a registered trademark of the Microsoft Corporation.

device characteristics (continued)

Table 1. Characteristics of the Pin-Compatible DSPs

HARDWARE FEATURES		C6203B	C6202	C6202B	C6204
Peripherals	EMIF	√	√	√	√
	DMA	4-Channel With Throughput Enhancements	4-Channel	4-Channel With Throughput Enhancements	4-Channel With Throughput Enhancements
	Expansion Bus	√	√	√	√
	McBSPs	3	3	3	2
	32-Bit Timers	2	2	2	2
Internal Program Memory	Size (Bytes)	384K	256K	256K	64K
	Organization	Block 0: 256K-Byte Mapped Program Block 1: 128K-Byte Cache/Mapped Program	Block 0: 128K-Byte Mapped Program Block 1: 128K-Byte Cache/Mapped Program	Block 0: 128K-Byte Mapped Program Block 1: 128K-Byte Cache/Mapped Program	1 Block: 64K-Byte Cache/Mapped Program
Internal Data Memory	Size (Bytes)	512K	128K	128K	64K
	Organization	2 Blocks: Four 16-Bit Banks per Block 50/50 Split	2 Blocks: Four 16-Bit Banks per Block 50/50 Split	2 Blocks: Four 16-Bit Banks per Block 50/50 Split	2 Blocks: Four 16-Bit Banks per Block 50/50 Split
CPU ID + CPU Rev ID	Control Status Register (CSR.[31:16])	0x0003	0x0002	0x0003	0x0003
Frequency	MHz	250, 300	200, 250	250, 300	200
Cycle Time	ns	3.33 ns (6203B-300) 4 ns (6203B-250) 4 ns (03BGNZA-250)	4 ns (6202–250) 5 ns (6202–200)	3.33 ns (6202B-300) 4 ns (6202B-250) 4 ns (02BGNZA-250)	5 ns (6204-200)
Voltage	Core (V)	1.5 / 1.7	1.8	1.5	1.5
	I/O (V)	3.3	3.3	3.3	3.3
PLL Options	CLKIN frequency multiplier [Bypass (x1), x4, x6, x7, x8, x9, x10, and x11]	All PLL Options (GLS/GNY Pkgs) x1, x4, x8, x10 (GNZ Pkg)	x1, x4 (Both Pkgs)	All PLL Options (GNY Pkg) x1, x4, x8, x10 (GNZ Pkg)	x1, x4 (Both Pkgs)
BGA Packages	27 x 27 mm	352-pin GNZ	352-pin GJL	352-pin GNZ	—
	18 x 18 mm	384-pin GLS	384-pin GLS	—	340-pin GLW
	18 x 18 mm	384-pin GNY (2.x, 3.x only)	—	384-pin GNY	–
	16 x 16 mm	—	—	—	288-pin GHK
Process Technology	µm	0.15 µm	0.18 µm	0.15 µm	0.15 µm
Product Status†	Product Preview (PP) Advance Information (AI) Production Data (PD)	PD	PD	PD	PD

† PRODUCTION DATA information is current as of publication date. Products conform to specifications per the terms of Texas Instruments standard warranty. Production processing does not necessarily include testing of all parameters.

C62x device compatibility

The TMS320C6202, C6202B, C6203B, and C6204 devices are pin-compatible; thus, making new system designs easier and providing faster time to market. The following list summarizes the C62x DSP device characteristic differences:

- Core Supply Voltage (1.8 V versus 1.7 V versus 1.5 V)

  The C6202 device core supply voltage is 1.8 V while the C6202B, C6203B, C6204 devices have core supply voltages of 1.5 V. The C6203B device (GLS, GNY, and GNZ packages) also has a 1.7-V core supply voltage.

- Device Clock Speeds

  The C6202B and C6203B devices run at –250 and –300 MHz clock speeds (with a C620xBGNZA extended temperature device that also runs at –250 MHz), while the C6202 device runs at –200 and –250 MHz, and the C6204 device runs at –200 MHz clock speed.

- PLL Options Availability

  Table 1 identifies the available PLL multiply factors [e.g., CLKIN x1 (PLL bypassed), x4, etc.] for each of the C62x DSP devices. For additional details on the PLL clock module and specific options for the C6203B device, see the *Clock PLL* section of this data sheet.

  For additional details on the PLL clock module and specific options for the C6202/02B devices, see the *Clock PLL* section of the *TMS320C6202, TMS320C6202B Fixed-Point Digital Signal Processors Data Shee*t (literature number SPRS104).

  And for additional details on the PLL clock module and specific options for the C6204 device, see the *Clock PLL* section of the *TMS320C6204 Fixed-Point Digital Signal Processor Data Sheet* (literature number SPRS152).

- On-Chip Memory Size

  The C6202/02B, C6203B, and C6204 devices have different on-chip program memory and data memory sizes (see Table 1).

- McBSPs

  The C6202, C6202B, and C6203B devices have three McBSPs while the C6204 device has two McBSPs on-chip.

For a more detailed discussion on migration concerns, and similarities/differences between the C6202, C6202B, C6203B, and C6204 devices, see the *How to Begin Development Today and Migrate Across the TMS320C6202/02B/03B/04 DSPs Application Report* (literature number SPRA603).

functional and CPU (DSP core) block diagram

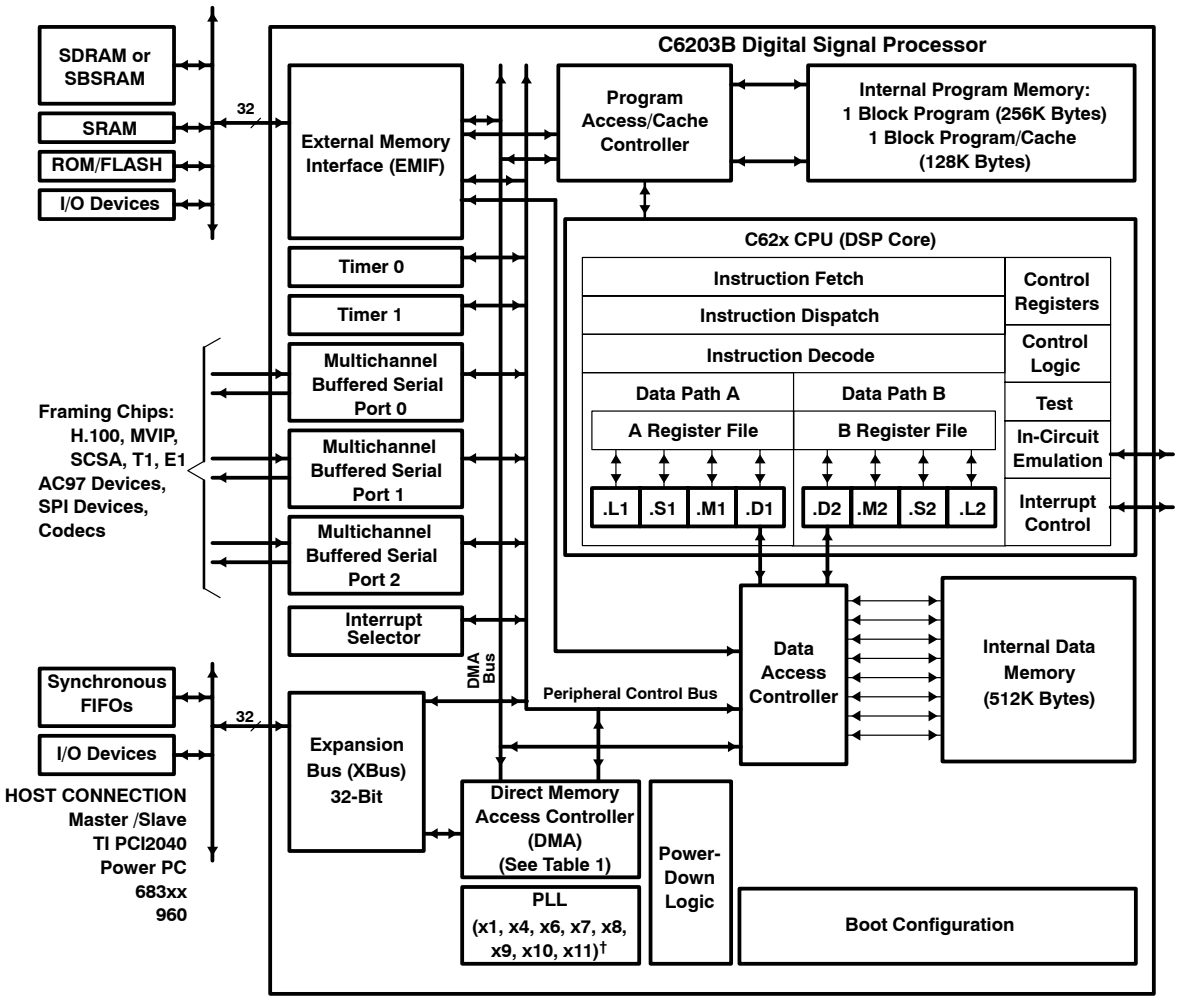

† For additional details on the PLL clock module and specific options for the C6203B device, see Table 1 and the *Clock PLL* section of this data sheet.

CPU (DSP core) description

The CPU fetches VelociTI advanced very-long instruction words (VLIW) (256 bits wide) to supply up to eight 32-bit instructions to the eight functional units during every clock cycle. The VelociTI VLIW architecture features controls by which all eight units do not have to be supplied with instructions if they are not ready to execute. The first bit of every 32-bit instruction determines if the next instruction belongs to the same execute packet as the previous instruction, or whether it should be executed in the following clock as a part of the next execute packet. Fetch packets are always 256 bits wide; however, the execute packets can vary in size. The variable-length execute packets are a key memory-saving feature, distinguishing the C62x CPU from other VLIW architectures.

The CPU features two sets of functional units. Each set contains four units and a register file. One set contains functional units .L1, .S1, .M1, and .D1; the other set contains units .D2, .M2, .S2, and .L2. The two register files each contain 16 32-bit registers for a total of 32 general-purpose registers. The two sets of functional units, along with two register files, compose sides A and B of the CPU [see the functional and CPU (DSP core) block diagram and Figure 1]. The four functional units on each side of the CPU can freely share the 16 registers belonging to that side. Additionally, each side features a single data bus connected to all the registers on the other side, by which the two sets of functional units can access data from the register files on the opposite side. While register access by functional units on the same side of the CPU as the register file can service all the units in a single clock cycle, register access using the register file across the CPU supports one read and one write per cycle.

Another key feature of the C62x CPU is the load/store architecture, where all instructions operate on registers (as opposed to data in memory). Two sets of data-addressing units (.D1 and .D2) are responsible for all data transfers between the register files and the memory. The data address driven by the .D units allows data addresses generated from one register file to be used to load or store data to or from the other register file. The C62x CPU supports a variety of indirect addressing modes using either linear- or circular-addressing modes with 5- or 15-bit offsets. All instructions are conditional, and most can access any one of the 32 registers. Some registers, however, are singled out to support specific addressing or to hold the condition for conditional instructions (if the condition is not automatically “true”). The two .M functional units are dedicated for multiplies. The two .S and .L functional units perform a general set of arithmetic, logical, and branch functions with results available every clock cycle.

The processing flow begins when a 256-bit-wide instruction fetch packet is fetched from a program memory. The 32-bit instructions destined for the individual functional units are “linked” together by “1” bits in the least significant bit (LSB) position of the instructions. The instructions that are “chained” together for simultaneous execution (up to eight in total) compose an execute packet. A “0” in the LSB of an instruction breaks the chain, effectively placing the instructions that follow it in the next execute packet. If an execute packet crosses the 256-bit-wide fetch-packet boundary, the assembler places it in the next fetch packet, while the remainder of the current fetch packet is padded with NOP instructions. The number of execute packets within a fetch packet can vary from one to eight. Execute packets are dispatched to their respective functional units at the rate of one per clock cycle and the next 256-bit fetch packet is not fetched until all the execute packets from the current fetch packet have been dispatched. After decoding, the instructions simultaneously drive all active functional units for a maximum execution rate of eight instructions every clock cycle. While most results are stored in 32-bit registers, they can be subsequently moved to memory as bytes or half-words as well. All load and store instructions are byte-, half-word, or word-addressable.

CPU (DSP core) description (continued)

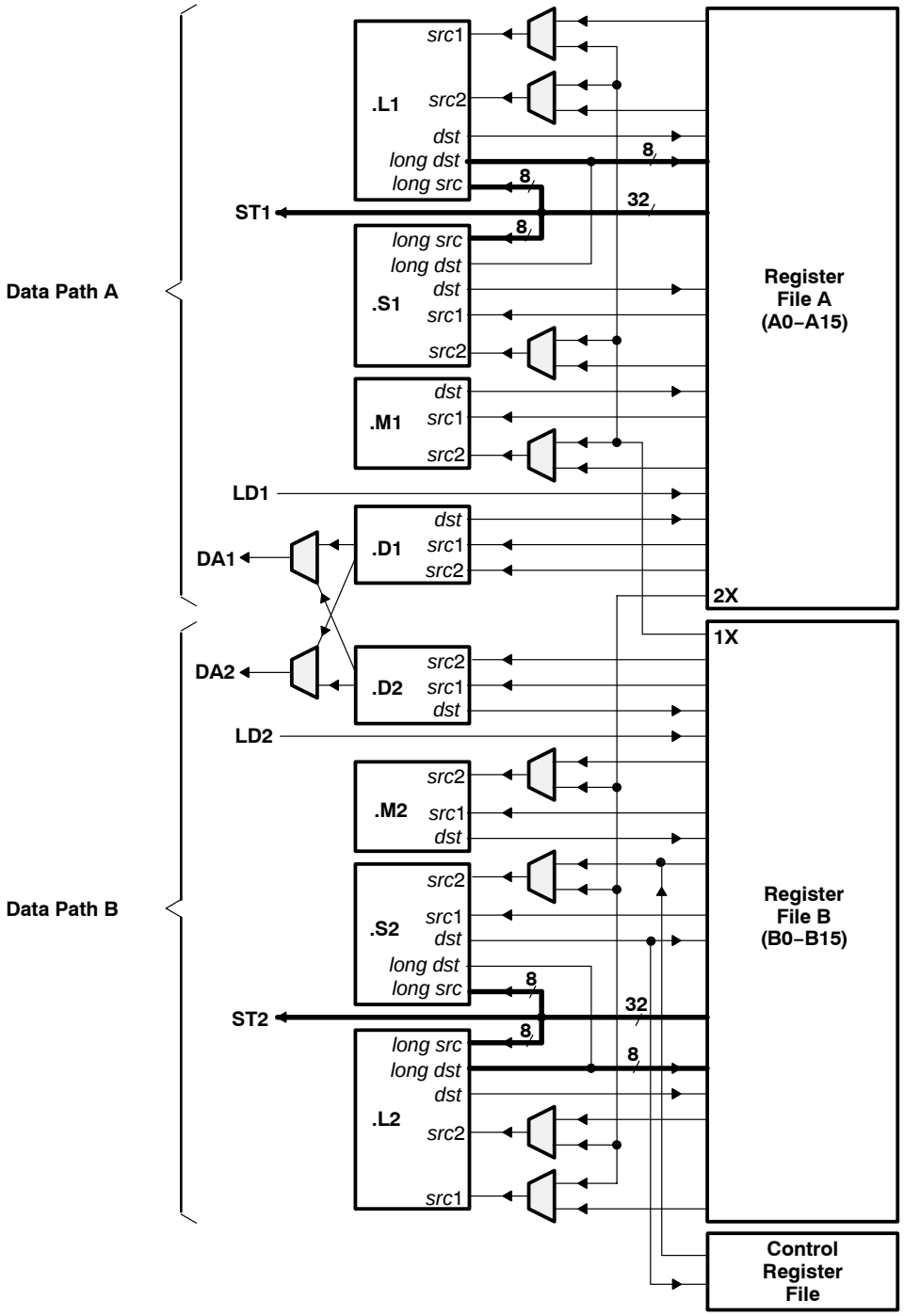

Figure 1. TMS320C62x CPU (DSP Core) Data Paths

memory map summary

Table 2 shows the memory map address ranges of the C6203B device. The C6203B device has the capability of a MAP 0 or MAP 1 memory block configuration. These memory block configurations are set up at reset by the boot configuration pins (generically called BOOTMODE[4:0]). For the C6203B device, the BOOTMODE configuration is handled, at reset, by the expansion bus module (specifically XD[4:0] pins). For more detailed information on the C6203B device settings, which include the device boot mode configuration at reset and other device-specific configurations, see *TMS320C620x/C670x DSP Boot Modes and Configuration* (SPRU642).

Table 2. TMS320C6203B Memory Map Summary

MEMORY BLOCK DESCRIPTION		BLOCK SIZE (BYTES)	HEX ADDRESS RANGE
MAP 0	MAP 1		
External Memory Interface (EMIF) CE0	Internal Program RAM	384K	0000_0000–0005_FFFF
EMIF CE0	Reserved	4M–384K	0006_0000–003F_FFFF
EMIF CE0	EMIF CE0	12M	0040_0000–00FF_FFFF
EMIF CE1	EMIF CE0	4M	0100_0000–013F_FFFF
Internal Program RAM	EMIF CE1	384K	0140_0000–0145_FFFF
Reserved	EMIF CE1	4M–384K	0146_0000–017F_FFFF
EMIF Registers		256K	0180_0000–0183_FFFF
DMA Controller Registers		256K	0184_0000–0187_FFFF
Expansion Bus (XBus) Registers		256K	0188_0000–018B_FFFF
McBSP 0 Registers		256K	018C_0000–018F_FFFF
McBSP 1 Registers		256K	0190_0000–0193_FFFF
Timer 0 Registers		256K	0194_0000–0197_FFFF
Timer 1 Registers		256K	0198_0000–019B_FFFF
Interrupt Selector Registers		512	019C_0000–019C_01FF
Power-Down Registers		256K–512	019C_0200–019F_FFFF
Reserved		256K	01A0_0000–01A3_FFFF
McBSP 2 Registers		256K	01A4_0000–01A7_FFFF
Reserved		5.5M	01A8_0000–01FF_FFFF
EMIF CE2		16M	0200_0000–02FF_FFFF
EMIF CE3		16M	0300_0000–03FF_FFFF
Reserved		1G–64M	0400_0000–3FFF_FFFF
XBus XCE0		256M	4000_0000–4FFF_FFFF
XBus XCE1		256M	5000_0000–5FFF_FFFF
XBus XCE2		256M	6000_0000–6FFF_FFFF
XBus XCE3		256M	7000_0000–7FFF_FFFF
Internal Data RAM		512K	8000_0000–8007_FFFF
Reserved		2G–512K	8008_0000–FFFF_FFFF

peripheral register descriptions

Table 3 through Table 12 identify the peripheral registers for the C6203B device by their register names, acronyms, and hex address or hex address range. For more detailed information on the register contents, bit names, and their descriptions, see the peripheral reference guide referenced in *TMS320C6000 DSP Peripherals Overview Reference Guide* (literature number SPRU190).

Table 3. EMIF Registers

HEX ADDRESS RANGE	ACRONYM	REGISTER NAME	COMMENTS
0180 0000	GBLCTL	EMIF global control	
0180 0004	CECTL1	EMIF CE1 space control	External or internal; dependent on MAP0 or MAP1 configuration (selected by the MAP bit in the EMIF GBLCTL register)
0180 0008	CECTL0	EMIF CE0 space control	External or internal; dependent on MAP0 or MAP1 configuration (selected by the MAP bit in the EMIF GBLCTL register)
0180 000C	–	Reserved	
0180 0010	CECTL2	EMIF CE2 space control	Corresponds to EMIF CE2 memory space: [0200 0000 – 02FF FFFF]
0180 0014	CECTL3	EMIF CE3 space control	Corresponds to EMIF CE3 memory space: [0300 0000 – 03FF FFFF]
0180 0018	SDCTL	EMIF SDRAM control	
0180 001C	SDTIM	EMIF SDRAM refresh control	
0180 0020 – 0180 0054	–	Reserved	
0180 0058 – 0183 FFFF	–	Reserved	

Table 4. DMA Registers

HEX ADDRESS RANGE	ACRONYM	REGISTER NAME
0184 0000	PRICTL0	DMA channel 0 primary control
0184 0004	PRICTL2	DMA channel 2 primary control
0184 0008	SECCTL0	DMA channel 0 secondary control
0184 000C	SECCTL2	DMA channel 2 secondary control
0184 0010	SRC0	DMA channel 0 source address
0184 0014	SRC2	DMA channel 2 source address
0184 0018	DST0	DMA channel 0 destination address
0184 001C	DST2	DMA channel 2 destination address
0184 0020	XFRCNT0	DMA channel 0 transfer counter
0184 0024	XFRCNT2	DMA channel 2 transfer counter
0184 0028	GBLCNTA	DMA global count reload register A
0184 002C	GBLCNTB	DMA global count reload register B
0184 0030	GBLIDXA	DMA global index register A
0184 0034	GBLIDXB	DMA global index register B
0184 0038	GBLADDRA	DMA global address register A
0184 003C	GBLADDRB	DMA global address register B
0184 0040	PRICTL1	DMA channel 1 primary control
0184 0044	PRICTL3	DMA channel 3 primary control

peripheral register descriptions (continued)

Table 4. DMA Registers (Continued)

HEX ADDRESS RANGE	ACRONYM	REGISTER NAME
0184 0048	SECCTL1	DMA channel 1 secondary control
0184 004C	SECCTL3	DMA channel 3 secondary control
0184 0050	SRC1	DMA channel 1 source address
0184 0054	SRC3	DMA channel 3 source address
0184 0058	DST1	DMA channel 1 destination address
0184 005C	DST3	DMA channel 3 destination address
0184 0060	XFRCNT1	DMA channel 1 transfer counter
0184 0064	XFRCNT3	DMA channel 3 transfer counter
0184 0068	GBLADDRC	DMA global address register C
0184 006C	GBLADDRD	DMA global address register D
0184 0070	AUXCTL	DMA auxiliary control register
0184 0074–0187 FFFF	—	Reserved

Table 5. Expansion Bus (XBUS) Registers

HEX ADDRESS RANGE	ACRONYM	REGISTER NAME	COMMENTS
0188 0000	XBGC	Expansion bus global control register	
0188 0004	XCECTL1	XCE1 space control register	Corresponds to XBus XCE0 memory space: [4000 0000–4FFF FFFF]
0188 0008	XCECTL0	XCE0 space control register	Corresponds to XBus XCE1 memory space: [5000 0000–5FFF FFFF]
0188 000C	XBHC	Expansion bus host port interface control register	DSP read/write access only
0188 0010	XCECTL2	XCE2 space control register	Corresponds to XBus XCE2 memory space: [6000 0000–6FFF FFFF]
0188 0014	XCECTL3	XCE3 space control register	Corresponds to XBus XCE3 memory space: [7000 0000–7FFF FFFF]
0188 0018	—	Reserved	
0188 001C	—	Reserved	
0188 0020	XBIMA	Expansion bus internal master address register	DSP read/write access only
0188 0024	XBEA	Expansion bus external address register	DSP read/write access only
0188 0028–018B FFFF	—	Reserved	
—	XBISA	Expansion bus internal slave address	
—	XBD	Expansion bus data	

peripheral register descriptions (continued)

Table 6. Interrupt Selector Registers

HEX ADDRESS RANGE	ACRONYM	REGISTER NAME	COMMENTS
019C 0000	MUXH	Interrupt multiplexer high	Selects which interrupts drive CPU interrupts 10–15 (INT10–INT15)
019C 0004	MUXL	Interrupt multiplexer low	Selects which interrupts drive CPU interrupts 4–9 (INT04–INT09)
019C 0008	EXTPOL	External interrupt polarity	Sets the polarity of the external interrupts (EXT_INT4–EXT_INT7)
019C 000C–019C 01FF	—	Reserved	
019C 0200	PDCTL	Peripheral power-down control register	
019C 0204–019F FFFF	—	Reserved	

Table 7. Peripheral Power-Down Control Register

HEX ADDRESS RANGE	ACRONYM	REGISTER NAME
019C 0200	PDCTL	Peripheral power-down control register

Table 8. McBSP 0 Registers

HEX ADDRESS RANGE	ACRONYM	REGISTER NAME	COMMENTS
018C 0000	DRR0	McBSP0 data receive register	The CPU and DMA controller can only read this register; they cannot write to it.
018C 0004	DXR0	McBSP0 data transmit register	
018C 0008	SPCR0	McBSP0 serial port control register	
018C 000C	RCR0	McBSP0 receive control register	
018C 0010	XCR0	McBSP0 transmit control register	
018C 0014	SRGR0	McBSP0 sample rate generator register	
018C 0018	MCR0	McBSP0 multichannel control register	
018C 001C	RCER0	McBSP0 receive channel enable register	
018C 0020	XCER0	McBSP0 transmit channel enable register	
018C 0024	PCR0	McBSP0 pin control register	
018C 0028–018F FFFF	—	Reserved	

peripheral register descriptions (continued)

Table 9. McBSP 1 Registers

HEX ADDRESS RANGE	ACRONYM	REGISTER NAME	COMMENTS
0190 0000	DRR1	Data receive register	The CPU and DMA controller can only read this register; they cannot write to it.
0190 0004	DXR1	McBSP1 data transmit register	
0190 0008	SPCR1	McBSP1 serial port control register	
0190 000C	RCR1	McBSP1 receive control register	
0190 0010	XCR1	McBSP1 transmit control register	
0190 0014	SRGR1	McBSP1 sample rate generator register	
0190 0018	MCR1	McBSP1 multichannel control register	
0190 001C	RCER1	McBSP1 receive channel enable register	
0190 0020	XCER1	McBSP1 transmit channel enable register	
0190 0024	PCR1	McBSP1 pin control register	
0190 0028–0193 FFFF	—	Reserved	

Table 10. McBSP 2 Registers

HEX ADDRESS RANGE	ACRONYM	REGISTER NAME	COMMENTS
01A4 0000	DRR2	McBSP2 data receive register	The CPU and DMA controller can only read this register; they cannot write to it.
01A4 0004	DXR2	McBSP2 data transmit register	
01A4 0008	SPCR2	McBSP2 serial port control register	
01A4 000C	RCR2	McBSP2 receive control register	
01A4 0010	XCR2	McBSP2 transmit control register	
01A4 0014	SRGR2	McBSP2 sample rate generator register	
01A4 0018	MCR2	McBSP2 multichannel control register	
01A4 001C	RCER2	McBSP2 receive channel enable register	
01A4 0020	XCER2	McBSP2 transmit channel enable register	
01A4 0024	PCR2	McBSP2 pin control register	
01A4 0028–01A7 FFFF	—	Reserved	

Table 11. Timer 0 Registers

HEX ADDRESS RANGE	ACRONYM	REGISTER NAME	COMMENTS
0194 0000	CTL0	Timer 0 control register	Determines the operating mode of the timer, monitors the timer status, and controls the function of the TOUT pin.
0194 0004	PRD0	Timer 0 period register	Contains the number of timer input clock cycles to count. This number controls the TSTAT signal frequency.
0194 0008	CNT0	Timer 0 counter register	Contains the current value of the incrementing counter.
0194 000C–0197 FFFF	—	Reserved	

Table 12. Timer 1 Registers

HEX ADDRESS RANGE	ACRONYM	REGISTER NAME	COMMENTS
0198 0000	CTL1	Timer 1 control register	Determines the operating mode of the timer, monitors the timer status, and controls the function of the TOUT pin.
0198 0004	PRD1	Timer 1 period register	Contains the number of timer input clock cycles to count. This number controls the TSTAT signal frequency.
0198 0008	CNT1	Timer 1 counter register	Contains the current value of the incrementing counter.
0198 000C–019B FFFF	—	Reserved	

DMA synchronization events

The C6203B DMA supports up to four independent programmable DMA channels. The four main DMA channels can be read/write synchronized based on the events shown in Table 13. Selection of these events is done via the RSYNC and WSYNC fields in the Primary Control registers of the specific DMA channel. For more detailed information on the DMA module, associated channels, and event-synchronization, see *TMS320C620x/C670x DSP Program and Data Memory Controller / Direct Memory Access (DMA) Controller Reference Guide* (literature number SPRU577).

Table 13. TMS320C6203B DMA Synchronization Events

DMA EVENT NUMBER (BINARY)	EVENT NAME	EVENT DESCRIPTION
00000	Reserved	Reserved
00001	TINT0	Timer 0 interrupt
00010	TINT1	Timer 1 interrupt
00011	SD_INT	EMIF SDRAM timer interrupt
00100	EXT_INT4	External interrupt pin 4
00101	EXT_INT5	External interrupt pin 5
00110	EXT_INT6	External interrupt pin 6
00111	EXT_INT7	External interrupt pin 7
01000	DMA_INT0	DMA channel 0 interrupt
01001	DMA_INT1	DMA channel 1 interrupt
01010	DMA_INT2	DMA channel 2 interrupt
01011	DMA_INT3	DMA channel 3 interrupt
01100	XEVT0	McBSP0 transmit event
01101	REVT0	McBSP0 receive event
01110	XEVT1	McBSP1 transmit event
01111	REVT1	McBSP1 receive event
10000	DSP_INT	Host processor-to-DSP interrupt
10001	XEVT2	McBSP2 transmit event
10010	REVT2	McBSP2 receive event
10011 –11111	Reserved	Reserved. Not used.

interrupt sources and interrupt selector

The C62x DSP core supports 16 prioritized interrupts, which are listed in Table 14. The highest-priority interrupt is INT_00 (dedicated to RESET) while the lowest-priority interrupt is INT_15. The first four interrupts (INT_00–INT_03) are non-maskable and fixed. The remaining interrupts (INT_04–INT_15) are maskable and default to the interrupt source specified in Table 14. The interrupt source for interrupts 4–15 can be programmed by modifying the selector value (binary value) in the corresponding fields of the Interrupt Selector Control registers: MUXH (address 0x019C0000) and MUXL (address 0x019C0004).

Table 14. C6203B DSP Interrupts

CPU INTERRUPT NUMBER	INTERRUPT SELECTOR CONTROL REGISTER	SELECTOR VALUE (BINARY)	INTERRUPT EVENT	INTERRUPT SOURCE
INT_00†	—	—	RESET	
INT_01†	—	—	NMI	
INT_02†	—	—	Reserved	Reserved. Do not use.
INT_03†	—	—	Reserved	Reserved. Do not use.
INT_04‡	MUXL[4:0]	00100	EXT_INT4	External interrupt pin 4
INT_05‡	MUXL[9:5]	00101	EXT_INT5	External interrupt pin 5
INT_06‡	MUXL[14:10]	00110	EXT_INT6	External interrupt pin 6
INT_07‡	MUXL[20:16]	00111	EXT_INT7	External interrupt pin 7
INT_08‡	MUXL[25:21]	01000	DMA_INT0	DMA channel 0 interrupt
INT_09‡	MUXL[30:26]	01001	DMA_INT1	DMA channel 1 interrupt
INT_10‡	MUXH[4:0]	00011	SD_INT	EMIF SDRAM timer interrupt
INT_11‡	MUXH[9:5]	01010	DMA_INT2	DMA channel 2 interrupt
INT_12‡	MUXH[14:10]	01011	DMA_INT3	DMA channel 3 interrupt
INT_13‡	MUXH[20:16]	00000	DSP_INT	Host-processor-to-DSP interrupt
INT_14‡	MUXH[25:21]	00001	TINT0	Timer 0 interrupt
INT_15‡	MUXH[30:26]	00010	TINT1	Timer 1 interrupt
—	—	01100	XINT0	McBSP0 transmit interrupt
—	—	01101	RINT0	McBSP0 receive interrupt
—	—	01110	XINT1	McBSP1 transmit interrupt
—	—	01111	RINT1	McBSP1 receive interrupt
—	—	10000	Reserved	Reserved. Not used.
—	—	10001	XINT2	McBSP2 transmit interrupt
—	—	10010	RINT2	McBSP2 receive interrupt
—	—	10011 –11111	Reserved	Reserved. Do not use.

† Interrupts INT_00 through INT_03 are non-maskable and fixed.

‡ Interrupts INT_04 through INT_15 are programmable by modifying the binary selector values in the Interrupt Selector Control registers fields. Table 14 shows the default interrupt sources for Interrupts INT_04 through INT_15. For more detailed information on interrupt sources and selection, see *TMS320C6000 DSP Interrupt Selector Reference Guide* (literature number SPRU646).

signal groups description

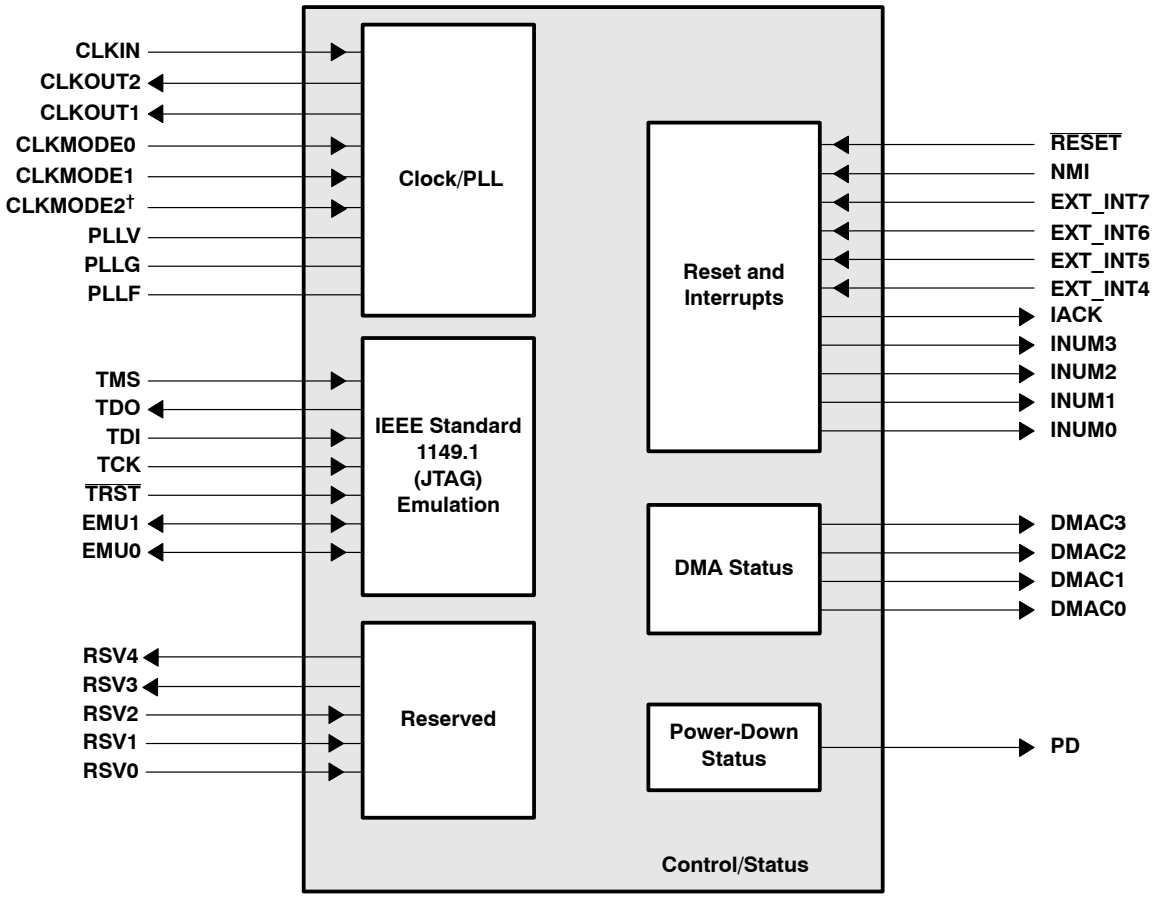

† CLKMODE2 is NOT available on the GNZ package for the C6203B device.

Figure 2. CPU (DSP Core) Signals

signal groups description (continued)

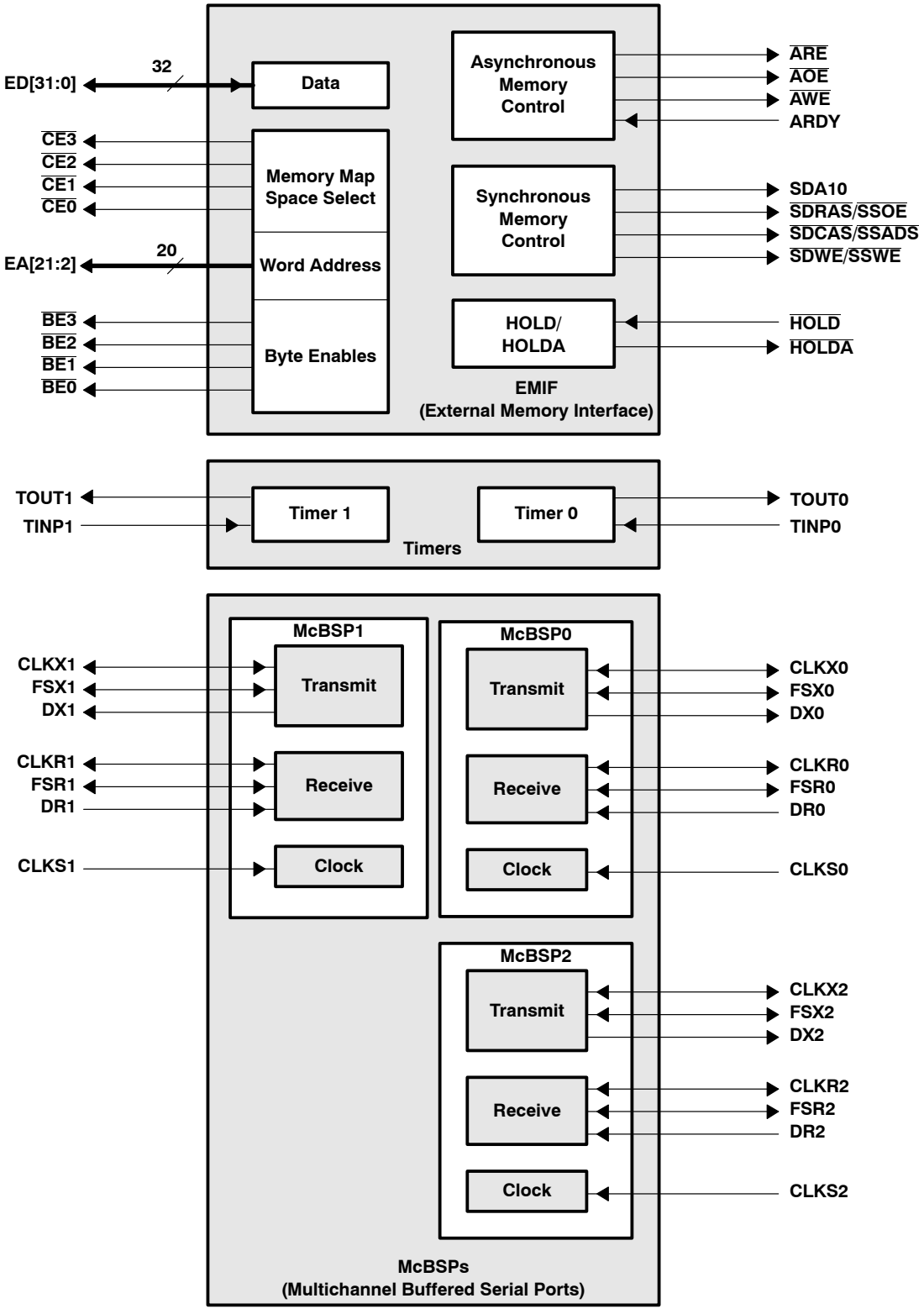

Figure 3. Peripheral Signals

signal groups description (continued)

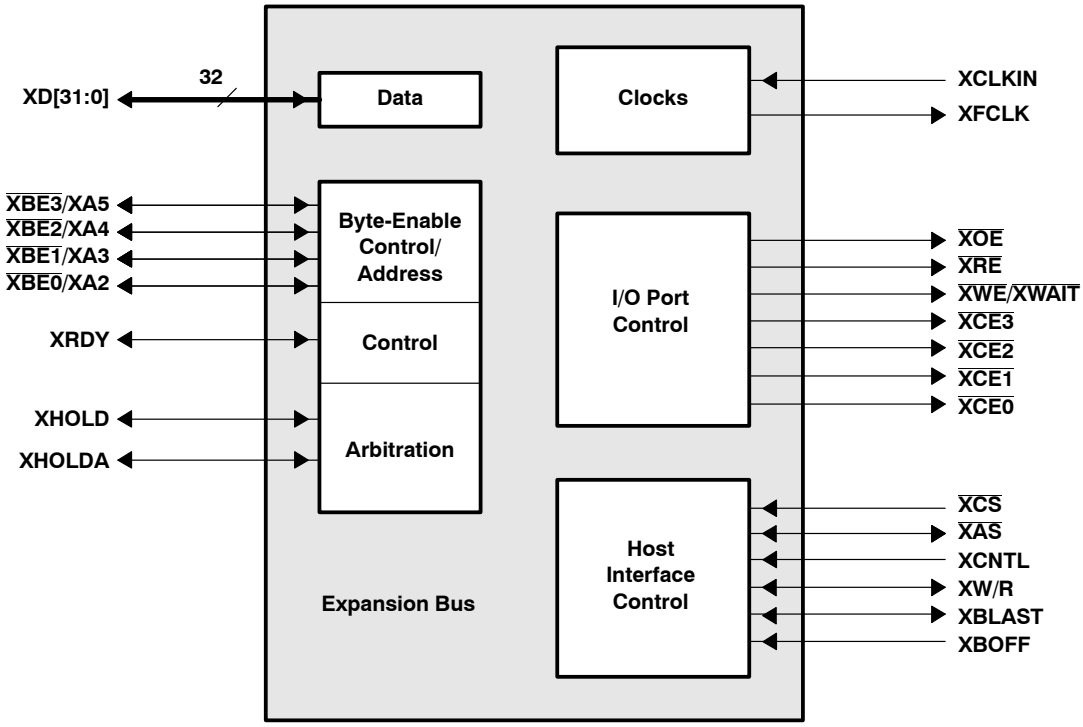

Figure 3. Peripheral Signals (Continued)

Signal Descriptions

SIGNAL NAME	PIN NO.		TYPE†	DESCRIPTION
	GNZ	GLS/ GNY		
CLOCK/PLL				
CLKIN	C12	B10	I	Clock input
CLKOUT1	AD20	Y18	O	Clock output at full device speed
CLKOUT2	AC19	AB19	O	Clock output at half (1/2) of device speed ❑ Used for synchronous memory interface
CLKMODE0	B15	B12	I	Clock mode selects ❑ Selects what multiply factors of the input clock frequency the CPU frequency equals. For more details on the GNZ, GLS, and GNY CLKMODE pins and the PLL multiply factors for the C6203B device, see the *Clock PLL* section of this data sheet.
CLKMODE1	C11	A9	I	
CLKMODE2	–	A14	I	
PLLV‡	D13	C11	A§	PLL analog V_{CC} connection for the low-pass filter
PLLG‡	D14	C12	A§	PLL analog GND connection for the low-pass filter
PLLF‡	C13	A11	A§	PLL low-pass filter connection to external components and a bypass capacitor
JTAG EMULATION				
TMS	AD7	Y5	I	JTAG test-port mode select (features an internal pullup)
TDO	AE6	AA4	O/Z	JTAG test-port data out
TDI	AF5	Y4	I	JTAG test-port data in (features an internal pullup)
TCK	AE5	AB2	I	JTAG test-port clock
$\overline{\text{TRST}}$	AC7	AA3	I	JTAG test-port reset (features an internal pulldown)
EMU1	AF6	AA5	I/O/Z	Emulation pin 1, pullup with a dedicated 20-kΩ resistor¶
EMU0	AC8	AB4	I/O/Z	Emulation pin 0, pullup with a dedicated 20-kΩ resistor¶
RESET AND INTERRUPTS				
$\overline{\text{RESET}}$	K2	J3	I	Device reset
NMI	L2	K2	I	Nonmaskable interrupt ❑ Edge-driven (rising edge)
EXT_INT7	V4	U2	I	External interrupts ❑ Edge-driven ❑ Polarity independently selected via the External Interrupt Polarity Register bits (EXTPOL.[3:0])
EXT_INT6	Y2	U3		
EXT_INT5	AA1	W1		
EXT_INT4	W4	V2		
IACK	Y1	V1	O	Interrupt acknowledge for all active interrupts serviced by the CPU
INUM3	V2	R3	O	Active interrupt identification number ❑ Valid during IACK for all active interrupts (not just external) ❑ Encoding order follows the interrupt-service fetch-packet ordering
INUM2	U4	T1		
INUM1	V3	T2		
INUM0	W2	T3		

† I = Input, O = Output, Z = High Impedance, S = Supply Voltage, GND = Ground

‡ PLLV, PLLG, and PLLF are not part of external voltage supply or ground. See the *clock PLL* section for information on how to connect these pins.

§ A = Analog Signal (PLL Filter)

¶ For emulation and normal operation, pull up EMU1 and EMU0 with a dedicated 20-kΩ resistor. For boundary scan, pull down EMU1 and EMU0 with a dedicated 20-kΩ resistor.

Signal Descriptions (Continued)

SIGNAL NAME	PIN NO.		TYPE†	DESCRIPTION
	GNZ	GLS/ GNY		
POWER-DOWN STATUS				
PD	AB2	Y2	O	Power-down modes 2 or 3 (active if high)
EXPANSION BUS				
XCLKIN	A9	C8	I	Expansion bus synchronous host interface clock input
XFCLK	B9	A8	O	Expansion bus FIFO interface clock output
XD31	D15	C13	I/O/Z	Expansion bus data ❑ Used for transfer of data, address, and control ❑ Also controls initialization of DSP modes and expansion bus at reset [Note: For more information on pin control and boot configuration fields, see the Boot Modes and Configuration chapter of the *TMS320C6000 DSP Peripherals Overview Reference Guide* (literature number SPRU190)] XD[30:16] – $\overline{\text{XCE}}$[3:0] memory type XD13 – XBLAST polarity XD12 – XW/R polarity XD11 – Asynchronous or synchronous host operation XD10 – Arbitration mode (internal or external) XD9 – FIFO mode XD8 – Little endian/big endian XD[4:0] – Boot mode All other expansion bus data pins not listed should be pulled down.
XD30	B16	A13		
XD29	A17	C14		
XD28	B17	B14		
XD27	D16	B15		
XD26	A18	C15		
XD25	B18	A15		
XD24	D17	B16		
XD23	C18	C16		
XD22	A20	A17		
XD21	D18	B17		
XD20	C19	C17		
XD19	A21	B18		
XD18	D19	A19		
XD17	C20	C18		
XD16	B21	B19		
XD15	A22	C19		
XD14	D20	B20		
XD13	B22	A21		
XD12	E25	C21		
XD11	F24	D20		
XD10	E26	B22		
XD9	F25	D21		
XD8	G24	E20		
XD7	H23	E21		
XD6	F26	D22		
XD5	G25	F20		
XD4	J23	F21		
XD3	G26	E22		
XD2	H25	G20		
XD1	J24	G21		
XD0	K23	G22		

† I = Input, O = Output, Z = High Impedance, S = Supply Voltage, GND = Ground

Signal Descriptions (Continued)

SIGNAL NAME	PIN NO.		TYPE†	DESCRIPTION
	GNZ	GLS/ GNY		
EXPANSION BUS (CONTINUED)				
$\overline{\text{XCE3}}$	F2	D2	O/Z	Expansion bus I/O port memory space enables ❑ Enabled by bits 28, 29, and 30 of the word address ❑ Only one asserted during any I/O port data access
$\overline{\text{XCE2}}$	E1	B1		
$\overline{\text{XCE1}}$	F3	D3		
$\overline{\text{XCE0}}$	E2	C2		
$\overline{\text{XBE3}}$/XA5	C7	C5	I/O/Z	Expansion bus multiplexed byte-enable control/address signals ❑ Act as byte-enable for host-port operation ❑ Act as address for I/O port operation
$\overline{\text{XBE2}}$/XA4	D8	A4		
$\overline{\text{XBE1}}$/XA3	A6	B5		
$\overline{\text{XBE0}}$/XA2	C8	C6		
$\overline{\text{XOE}}$	A7	A6	O/Z	Expansion bus I/O port output-enable
$\overline{\text{XRE}}$	C9	C7	O/Z	Expansion bus I/O port read-enable
$\overline{\text{XWE}}$/$\overline{\text{XWAIT}}$	D10	B7	O/Z	Expansion bus I/O port write-enable and host-port wait signals
$\overline{\text{XCS}}$	A10	C9	I	Expansion bus host-port chip-select input
$\overline{\text{XAS}}$	D9	B6	I/O/Z	Expansion bus host-port address strobe
XCNTL	B10	B9	I	Expansion bus host control. XCNTL selects between expansion bus address or data register.
XW/R	D11	B8	I/O/Z	Expansion bus host-port write/read-enable. XW/R polarity is selected at reset.
XRDY	A5	C4	I/O/Z	Expansion bus host-port ready (active low) and I/O port ready (active high)
XBLAST	B6	B4	I/O/Z	Expansion bus host-port burst last-polarity selected at reset
XBOFF	B11	A10	I	Expansion bus back off
XHOLD	B5	A2	I/O/Z	Expansion bus hold request
XHOLDA	D7	B3	I/O/Z	Expansion bus hold acknowledge
EMIF – CONTROL SIGNALS COMMON TO ALL TYPES OF MEMORY				
$\overline{\text{CE3}}$	AB25	Y21	O/Z	Memory space enables ❑ Enabled by bits 24 and 25 of the word address ❑ Only one asserted during any external data access
$\overline{\text{CE2}}$	AA24	W20		
$\overline{\text{CE1}}$	AB26	AA22		
$\overline{\text{CE0}}$	AA25	W21		
$\overline{\text{BE3}}$	Y24	V20	O/Z	Byte-enable control ❑ Decoded from the two lowest bits of the internal address ❑ Byte-write enables for most types of memory ❑ Can be directly connected to SDRAM read and write mask signal (SDQM)
$\overline{\text{BE2}}$	W23	V21		
$\overline{\text{BE1}}$	AA26	W22		
$\overline{\text{BE0}}$	Y25	U20		

† I = Input, O = Output, Z = High Impedance, S = Supply Voltage, GND = Ground

Signal Descriptions (Continued)

SIGNAL NAME	PIN NO.		TYPE†	DESCRIPTION
	GNZ	GLS/ GNY		
EMIF – ADDRESS				
EA21	J25	H20	O/Z	External address (word address)
EA20	J26	H21		
EA19	L23	H22		
EA18	K25	J20		
EA17	L24	J21		
EA16	L25	K21		
EA15	M23	K20		
EA14	M24	K22		
EA13	M25	L21		
EA12	N23	L20		
EA11	P24	L22		
EA10	P23	M20		
EA9	R25	M21		
EA8	R24	N22		
EA7	R23	N20		
EA6	T25	N21		
EA5	T24	P21		
EA4	U25	P20		
EA3	T23	R22		
EA2	V26	R21		
EMIF – DATA				
ED31	AD8	Y6	I/O/Z	External data
ED30	AC9	AA6		
ED29	AF7	AB6		
ED28	AD9	Y7		
ED27	AC10	AA7		
ED26	AE9	AB8		
ED25	AF9	Y8		
ED24	AC11	AA8		
ED23	AE10	AA9		
ED22	AD11	Y9		
ED21	AE11	AB10		
ED20	AC12	Y10		
ED19	AD12	AA10		
ED18	AE12	AA11		
ED17	AC13	Y11		
ED16	AD14	AB12		
ED15	AC14	Y12		
ED14	AE15	AA12		

† I = Input, O = Output, Z = High Impedance, S = Supply Voltage, GND = Ground

Signal Descriptions (Continued)

SIGNAL NAME	PIN NO.		TYPE†	DESCRIPTION
	GNZ	GLS/ GNY		
EMIF – DATA (CONTINUED)				
ED13	AD15	AA13	I/O/Z	External data
ED12	AC15	Y13		
ED11	AE16	AB13		
ED10	AD16	Y14		
ED9	AE17	AA14		
ED8	AC16	AA15		
ED7	AF18	Y15		
ED6	AE18	AB15		
ED5	AC17	AA16		
ED4	AD18	Y16		
ED3	AF20	AB17		
ED2	AC18	AA17		
ED1	AD19	Y17		
ED0	AF21	AA18		
EMIF – ASYNCHRONOUS MEMORY CONTROL				
$\overline{\text{ARE}}$	V24	T21	O/Z	Asynchronous memory read-enable
$\overline{\text{AOE}}$	V25	R20	O/Z	Asynchronous memory output-enable
$\overline{\text{AWE}}$	U23	T22	O/Z	Asynchronous memory write-enable
ARDY	W25	T20	I	Asynchronous memory ready input
EMIF – SYNCHRONOUS DRAM (SDRAM)/SYNCHRONOUS BURST SRAM (SBSRAM) CONTROL				
SDA10	AE21	AA19	O/Z	SDRAM address 10 (separate for deactivate command)
$\overline{\text{SDCAS}}$/$\overline{\text{SSADS}}$	AE22	AB21	O/Z	SDRAM column-address strobe/SBSRAM address strobe
$\overline{\text{SDRAS}}$/$\overline{\text{SSOE}}$	AF22	Y19	O/Z	SDRAM row-address strobe/SBSRAM output-enable
$\overline{\text{SDWE}}$/$\overline{\text{SSWE}}$	AC20	AA20	O/Z	SDRAM write-enable/SBSRAM write-enable
EMIF – BUS ARBITRATION				
$\overline{\text{HOLD}}$	Y26	V22	I	Hold request from the host
$\overline{\text{HOLDA}}$	V23	U21	O	Hold-request-acknowledge to the host
TIMER 0				
TOUT0	F1	D1	O	Timer 0 or general-purpose output
TINP0	H4	E2	I	Timer 0 or general-purpose input
TIMER 1				
TOUT1	J4	F2	O	Timer 1 or general-purpose output
TINP1	G2	F3	I	Timer 1 or general-purpose input
DMA ACTION COMPLETE STATUS				
DMAC3	Y3	V3	O	DMA action complete
DMAC2	AA2	W2		
DMAC1	AB1	AA1		
DMAC0	AA3	W3		

† I = Input, O = Output, Z = High Impedance, S = Supply Voltage, GND = Ground

Signal Descriptions (Continued)

SIGNAL NAME	PIN NO.		TYPE†	DESCRIPTION
	GNZ	GLS/ GNY		
MULTICHANNEL BUFFERED SERIAL PORT 0 (McBSP0)				
CLKS0	M4	K3	I	External clock source (as opposed to internal)
CLKR0	M2	L2	I/O/Z	Receive clock
CLKX0	M3	K1	I/O/Z	Transmit clock
DR0	R2	M2	I	Receive data
DX0	P4	M3	O/Z	Transmit data
FSR0	N3	M1	I/O/Z	Receive frame sync
FSX0	N4	L3	I/O/Z	Transmit frame sync
MULTICHANNEL BUFFERED SERIAL PORT 1 (McBSP1)				
CLKS1	G1	E1	I	External clock source (as opposed to internal)
CLKR1	J3	G2	I/O/Z	Receive clock
CLKX1	H2	G3	I/O/Z	Transmit clock
DR1	L4	H1	I	Receive data
DX1	J1	H2	O/Z	Transmit data
FSR1	J2	H3	I/O/Z	Receive frame sync
FSX1	K4	G1	I/O/Z	Transmit frame sync
MULTICHANNEL BUFFERED SERIAL PORT 2 (McBSP2)				
CLKS2	R3	N1	I	External clock source (as opposed to internal)
CLKR2	T2	N2	I/O/Z	Receive clock
CLKX2	R4	N3	I/O/Z	Transmit clock
DR2	V1	R2	I	Receive data
DX2	T4	R1	O/Z	Transmit data
FSR2	U2	P3	I/O/Z	Receive frame sync
FSX2	T3	P2	I/O/Z	Transmit frame sync
RESERVED FOR TEST				
RSV0	L3	J2	I	Reserved for testing, pullup with a dedicated 20-kΩ resistor
RSV1	G3	E3	I	Reserved for testing, pullup with a dedicated 20-kΩ resistor
RSV2	A12	B11	I	Reserved for testing, pullup with a dedicated 20-kΩ resistor
RSV3	C15	B13	O	Reserved (leave unconnected, ***do not*** connect to power or ground)
RSV4	D12	C10	O	Reserved (leave unconnected, ***do not*** connect to power or ground)

† I = Input, O = Output, Z = High Impedance, S = Supply Voltage, GND = Ground

Signal Descriptions (Continued)

SIGNAL NAME	PIN NO.		TYPE†	DESCRIPTION
	GNZ	GLS/ GNY		
SUPPLY VOLTAGE PINS				
DV_{DD}	A11	A3	S	3.3-V supply voltage (I/O)
	A16	A7		
	B7	A16		
	B8	A20		
	B19	D4		
	B20	D6		
	C6	D7		
	C10	D9		
	C14	D10		
	C17	D13		
	C21	D14		
	G4	D16		
	G23	D17		
	H3	D19		
	H24	F1		
	K3	F4		
	K24	F19		
	L1	F22		
	L26	G4		
	N24	G19		
	P3	J4		
	T1	J19		
	T26	K4		
	U3	K19		
	U24	L1		
	W3	M22		
	W24	N4		
	Y4	N19		
	Y23	P4		
	AD6	P19		
	AD10	T4		
	AD13	T19		
	AD17	U1		
	AD21	U4		
	AE7	U19		
	AE8	U22		
	AE19	W4		
	AE20	W6		
	AF11	W7		

† I = Input, O = Output, Z = High Impedance, S = Supply Voltage, GND = Ground

Signal Descriptions (Continued)

SIGNAL NAME	PIN NO.		TYPE†	DESCRIPTION
	GNZ	GLS/ GNY		
SUPPLY VOLTAGE PINS (CONTINUED)				
DV_{DD}	AF16	W9	S	3.3-V supply voltage (I/O)
	—	W10		
	—	W13		
	—	W14		
	—	W16		
	—	W17		
	—	W19		
	—	AB5		
	—	AB9		
	—	AB14		
	—	AB18		
CV_{DD}	A1	E7	S	1.5-V supply voltage (core) 1.7-V supply voltage (core) (C6203BGLS, C6203BGNY, and C6203BGNZ 1.7-V parts only)
	A2	E8		
	A3	E10		
	A24	E11		
	A25	E12		
	A26	E13		
	B1	E15		
	B2	E16		
	B3	F7		
	B24	F8		
	B25	F9		
	B26	F11		
	C1	F12		
	C2	F14		
	C3	F15		
	C4	F16		
	C23	G5		
	C24	G6		
	C25	G17		
	C26	G18		
	D3	H5		
	D4	H6		
	D5	H17		
	D22	H18		
	D23	J6		
	D24	J17		
	E4	K5		
	E23	K18		
	AB4	L5		

† I = Input, O = Output, Z = High Impedance, S = Supply Voltage, GND = Ground

Signal Descriptions (Continued)

SIGNAL NAME	PIN NO.		TYPE†	DESCRIPTION
	GNZ	GLS/ GNY		
SUPPLY VOLTAGE PINS (CONTINUED)				
CV_{DD}	AB23	L6	S	1.5-V supply voltage (core) 1.7-V supply voltage (core) (C6203BGLS, C6203BGNY, and C6203BGNZ 1.7-V parts only)
	AC3	L17		
	AC4	L18		
	AC5	M5		
	AC22	M6		
	AC23	M17		
	AC24	M18		
	AD1	N5		
	AD2	N18		
	AD3	P6		
	AD4	P17		
	AD23	R5		
	AD24	R6		
	AD25	R17		
	AD26	R18		
	AE1	T5		
	AE2	T6		
	AE3	T17		
	AE24	T18		
	AE25	U7		
	AE26	U8		
	AF1	U9		
	AF2	U11		
	AF3	U12		
	AF24	U14		
	AF25	U15		
	AF26	U16		
	–	V7		
	–	V8		
	–	V10		
	–	V11		
	–	V12		
	–	V13		
	–	V15		
	–	V16		
GROUND PINS				
V_{SS}	A4	A1	GND	Ground pins
	A8	A5		
	A13	A12		
	A14	A18		

† I = Input, O = Output, Z = High Impedance, S = Supply Voltage, GND = Ground

Signal Descriptions (Continued)

SIGNAL NAME	PIN NO.		TYPE†	DESCRIPTION
	GNZ	GLS/ GNY		
GROUND PINS (CONTINUED)				
V_{SS}	A15	A22	GND	Ground pins
	A19	B2		
	A23	B21		
	B4	C1		
	B12	C3		
	B13	C20		
	B14	C22		
	B23	D5		
	C5	D8		
	C16	D11		
	C22	D12		
	D1	D15		
	D2	D18		
	D6	E4		
	D21	E5		
	D25	E6		
	D26	E9		
	E3	E14		
	E24	E17		
	F4	E18		
	F23	E19		
	H1	F5		
	H26	F6		
	K1	F10		
	K26	F13		
	M1	F17		
	M26	F18		
	N1	H4		
	N2	H19		
	N25	J1		
	N26	J5		
	P1	J18		
	P2	J22		
	P25	K6		
	P26	K17		
	R1	L4		

† I = Input, O = Output, Z = High Impedance, S = Supply Voltage, GND = Ground

Signal Descriptions (Continued)

SIGNAL NAME	PIN NO.		TYPE†	DESCRIPTION
	GNZ	GLS/ GNY		
GROUND PINS (CONTINUED)				
V_{SS}	R26	L19	GND	Ground pins
	U1	M4		
	U26	M19		
	W1	N6		
	W26	N17		
	AA4	P1		
	AA23	P5		
	AB3	P18		
	AB24	P22		
	AC1	R4		
	AC2	R19		
	AC6	U5		
	AC21	U6		
	AC25	U10		
	AC26	U13		
	AD5	U17		
	AD22	U18		
	AE4	V4		
	AE13	V5		
	AE14	V6		
	AE23	V9		
	AF4	V14		
	AF8	V17		
	AF10	V18		
	AF12	V19		
	AF13	W5		
	AF14	W8		
	AF15	W11		
	AF17	W12		
	AF19	W15		
	AF23	W18		
	–	Y1		
	–	Y3		
	–	Y20		
	–	Y22		
	–	AA2		
	–	AA21		

† I = Input, O = Output, Z = High Impedance, S = Supply Voltage, GND = Ground

Signal Descriptions (Continued)

SIGNAL NAME	PIN NO. GNZ	PIN NO. GLS/GNY	TYPE†	DESCRIPTION
GROUND PINS (CONTINUED)				
V_{SS}	—	AB1	GND	Ground pins
	—	AB3		
	—	AB7		
	—	AB11		
	—	AB16		
	—	AB20		
	—	AB22		

† I = Input, O = Output, Z = High Impedance, S = Supply Voltage, GND = Ground

development support

TI offers an extensive line of development tools for the TMS320C6000 DSP platform, including tools to evaluate the performance of the processors, generate code, develop algorithm implementations, and fully integrate and debug software and hardware modules.

The following products support development of C6000™ DSP-based applications:

Software Development Tools:
Code Composer Studio™ Integrated Development Environment (IDE) including Editor
C/C++/Assembly Code Generation, and Debug plus additional development tools
Scalable, Real-Time Foundation Software (DSP/BIOS™), which provides the basic run-time target software needed to support any DSP application.

Hardware Development Tools:
Extended Development System (XDS™) Emulator (supports C6000™ DSP multiprocessor system debug)
EVM (Evaluation Module)

For a complete listing of development-support tools for the TMS320C6000 DSP platform, visit the Texas Instruments web site on the Worldwide Web at http://www.ti.com uniform resource locator (URL). For information on pricing and availability, contact the nearest TI field sales office or authorized distributor.

Code Composer Studio, DSP/BIOS, XDS, and TMS320 are trademarks of Texas Instruments.

device and development-support tool nomenclature

To designate the stages in the product development cycle, TI assigns prefixes to the part numbers of all TMS320 DSP devices and support tools. Each TMS320 DSP commercial family member has one of three prefixes: TMX, TMP, or TMS. Texas Instruments recommends two of three possible prefix designators for support tools: TMDX and TMDS. These prefixes represent evolutionary stages of product development from engineering prototypes (TMX/TMDX) through fully qualified production devices/tools (TMS/TMDS).

Device development evolutionary flow:

TMX Experimental device that is not necessarily representative of the final device's electrical specifications

TMP Final silicon die that conforms to the device's electrical specifications but has not completed quality and reliability verification

TMS Fully qualified production device

Support tool development evolutionary flow:

TMDX Development-support product that has not yet completed Texas Instruments internal qualification testing.

TMDS Fully qualified development-support product

TMX and TMP devices and TMDX development-support tools are shipped against the following disclaimer:

"Developmental product is intended for internal evaluation purposes."

TMS devices and TMDS development-support tools have been characterized fully, and the quality and reliability of the device have been demonstrated fully. TI's standard warranty applies.

Predictions show that prototype devices (TMX or TMP) have a greater failure rate than the standard production devices. Texas Instruments recommends that these devices not be used in any production system because their expected end-use failure rate still is undefined. Only qualified production devices are to be used.

TI device nomenclature also includes a suffix with the device family name. This suffix indicates the package type (for example, GLS), the temperature range (for example, blank is the default commercial temperature range), and the device speed range in megahertz (for example, -300 is 300 MHz).

Table 15 lists the device orderable part numbers (P/Ns) and Figure 4 provides a legend for reading the complete device name for any member of the TMS320C6000 DSP platform. For more information on the C6203B device orderable P/Ns, visit the Texas Instruments web site on the Worldwide web at http://www.ti.com URL, or contact the nearest TI field sales office or authorized distributor.

device and development-support tool nomenclature (continued)

Table 15. TMS320C6203B Device Part Numbers (P/Ns) and Ordering Information

DEVICE ORDERABLE P/N	DEVICE SPEED	CORE AND I/O VOLTAGE		OPERATING CASE TEMPERATURE RANGE
		CV_{DD} (CORE)	DV_{DD} (I/O)	
C6203B REV. 2				
TMS32C6203BGLS173H	250 MHz/2000 MIPS	1.5 V	3.3 V	0°C to 90°C
	300 MHz/2400 MIPS	1.7 V	3.3 V	0°C to 90°C
TMS320C6203BGLS-3H	300 MHz/2400 MIPS	1.5 V	3.3 V	0°C to 90°C
C6203B REV. 3				
TMS320C6203BGNY300	300 MHz/2400 MIPS	1.5 V	3.3 V	0°C to 90°C
		1.7 V	3.3 V	0°C to 90°C
TMS320C6203BGNY173	250 MHz/2000 MIPS	1.5 V	3.3 V	0°C to 90°C
	300 MHz/2400 MIPS	1.7 V	3.3 V	0°C to 90°C
TMS320C6203BGNY3E	300 MHz/2400 MIPS	1.5 V	3.3 V	0°C to 90°C
TMS320C6203BGNZ300	300 MHz/2400 MIPS	1.5 V	3.3 V	0°C to 90°C
		1.7 V	3.3 V	0°C to 90°C
TMS320C6203BGNZ173	250 MHz/2000 MIPS	1.5 V	3.3 V	0°C to 90°C
	300 MHz/2400 MIPS	1.7 V	3.3 V	0°C to 90°C
TMS32C6203BGNZA250	250 MHz/2000 MIPS	1.5 V	3.3 V	–40°C to 105°C

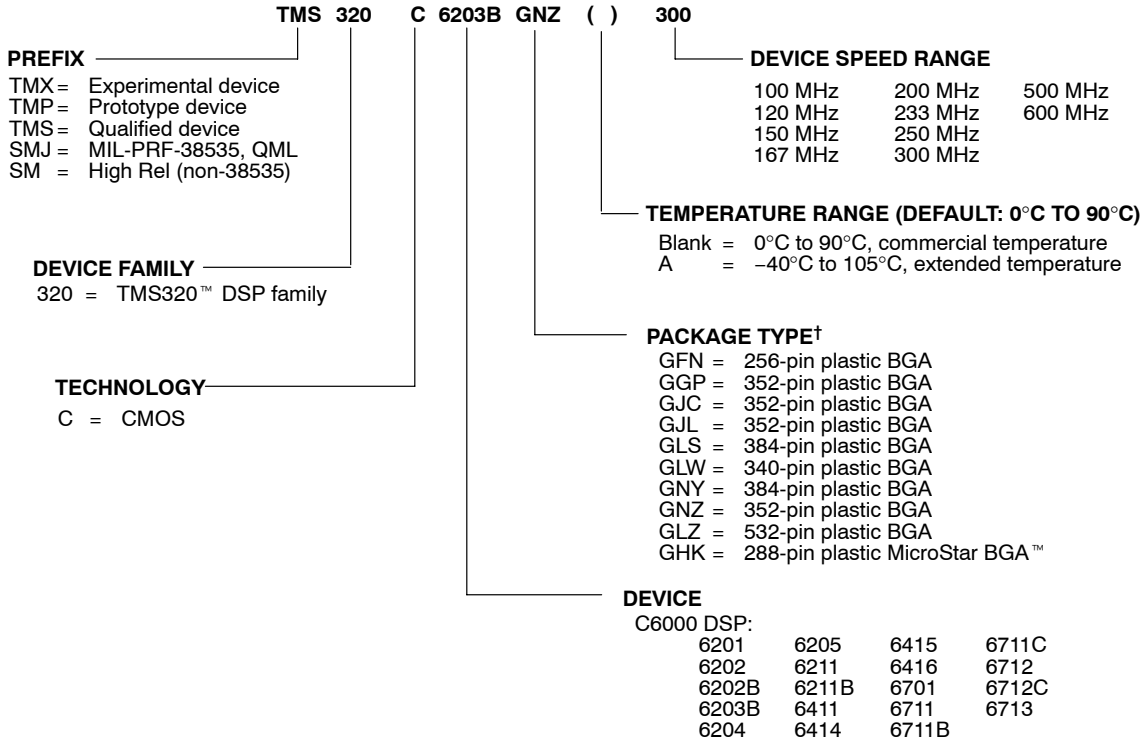

† BGA = Ball Grid Array

Figure 4. TMS320C6000™ DSP Platform Device Nomenclature (Including TMS320C6203B)

MicroStar BGA is a trademark of Texas Instruments.

documentation support

Extensive documentation supports all TMS320 DSP family devices from product announcement through applications development. The types of documentation available include: data sheets, such as this document, with design specifications; complete user's reference guides for all devices and tools; technical briefs; development-support tools; on-line help; and hardware and software applications. The following is a brief, descriptive list of support documentation specific to the C6000 DSP devices:

The *TMS320C6000 CPU and Instruction Set Reference Guide* (literature number SPRU189) describes the C6000 CPU (DSP core) architecture, instruction set, pipeline, and associated interrupts.

The *TMS320C6000 DSP Peripherals Overview Reference Guide* (literature number SPRU190) briefly describes the functionality of the peripherals available on the C6000 DSP platform of devices, such as the 64-/32-/16-bit external memory interfaces (EMIFs), 32-/16-bit host-port interfaces (HPIs), multichannel buffered serial ports (McBSPs), direct memory access (DMA), enhanced direct-memory-access (EDMA) controller, expansion bus (XBus), peripheral component interconnect (PCI), clocking and phase-locked loop (PLL); and power-down modes.

The *How to Begin Development Today and Migrate Across the TMS320C6202/02B/03B/04 DSPs Application Report* (literature number SPRA603) describes the migration concerns and identifies the similarities and differences between the C6202, C6202B, C6203B, and C6204 C6000 DSP devices.

The *TMS320C6203, TMS320C6203B Digital Signal Processors Silicon Errata* (literature number SPRZ174) describes the known exceptions to the functional specifications for particular silicon revisions of the TMS320C6203 and TMS320C6203B devices.

The *Using IBIS Models for Timing Analysis Application Report* (literature number SPRA839) describes how to properly use IBIS models to attain accurate timing analysis for a given system.

The tools support documentation is electronically available within the Code Composer Studio™ IDE. For a complete listing of the latest C6000 DSP documentation, visit the Texas Instruments web site on the Worldwide Web at http://www.ti.com uniform resource locator (URL).

clock PLL

Most of the internal C6203B clocks are generated from a single source through the CLKIN pin. This source clock either drives the PLL, which multiplies the source clock in frequency to generate the internal CPU clock, or bypasses the PLL to become the internal CPU clock.

To use the PLL to generate the CPU clock, the external PLL filter circuit must be properly designed. Figure 5, and Table 16 through Table 18 show the external PLL circuitry for either x1 (PLL bypass) or x4 PLL multiply modes. Figure 6 shows the external PLL circuitry for a system with ONLY x1 (PLL bypass) mode.

To minimize the clock jitter, a single clean power supply should power both the C6203B device and the external clock oscillator circuit. Noise coupling into PLLF directly impacts PLL clock jitter. The minimum CLKIN rise and fall times should also be observed. For the input clock timing requirements, see the *input and output clocks* electricals section.

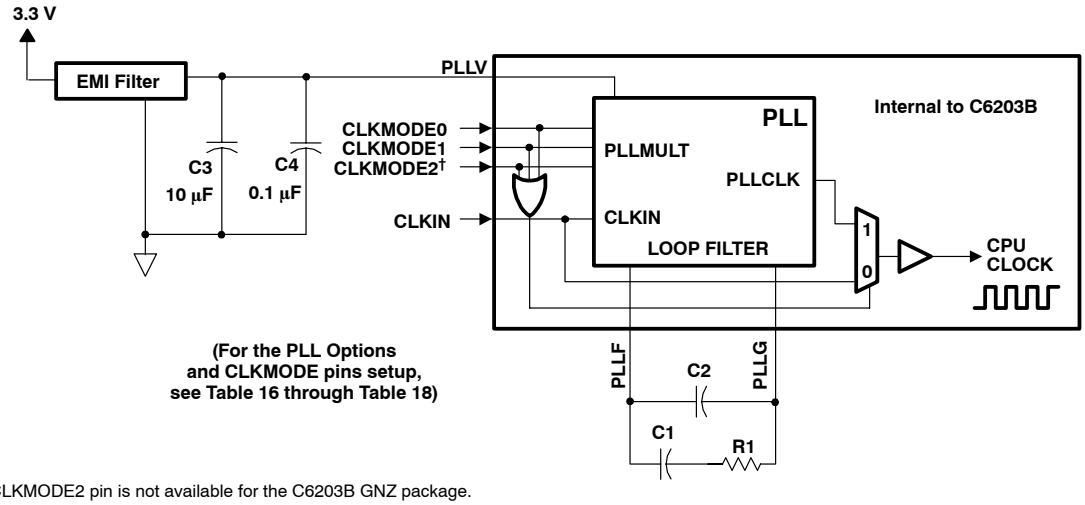

† The CLKMODE2 pin is not available for the C6203B GNZ package.

NOTES: A. Keep the lead length and the number of vias between pin PLLF, pin PLLG, R1, C1, and C2 to a minimum. In addition, place all PLL components (R1, C1, C2, C3, C4, and EMI Filter) as close to the C6000 DSP device as possible. Best performance is achieved with the PLL components on a single side of the board without jumpers, switches, or components other than the ones shown.

B. For reduced PLL jitter, maximize the spacing between switching signals and the PLL external components (R1, C1, C2, C3, C4, and the EMI Filter).

C. The 3.3-V supply for the EMI filter must be from the same 3.3-V power plane supplying the I/O voltage, DV_{DD}.

D. EMI filter manufacturer: TDK part number ACF451832-333, 223, 153, 103. Panasonic part number EXCCET103U.

Figure 5. External PLL Circuitry for Either PLL Multiply Modes or x1 (Bypass) Mode

clock PLL (continued)

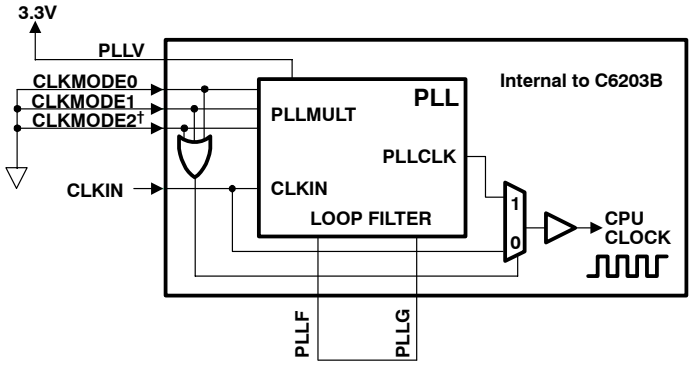

† The CLKMODE2 pin is not available for the C6203B GNZ package.

NOTES: A. For a system with ONLY PLL x1 (bypass) mode, short the PLLF to PLLG.
B. The 3.3-V supply for PLLV must be from the same 3.3-V power plane supplying the I/O voltage, DV_{DD}.

Figure 6. External PLL Circuitry for x1 (Bypass) PLL Mode Only

Table 16. TMS320C6203B GLS and C6203B GNY Packages PLL Multiply and Bypass (x1) Options†

GLS PACKAGE – 18 X 18 MM BGA GNY PACKAGE – 18 X 18 MM BGA					
BIT (PIN NO.)	CLKMODE2 (A14)	CLKMODE1 (A9)	CLKMODE0 (B12)	DEVICES AND PLL CLOCK OPTIONS	
				GLS	GNY
Value	0	0	0	Bypass (x1)	Bypass (x1)
	0	0	1	x4	x4
	0	1	0	x8	x8
	0	1	1	x10	x10
	1	0	0	x6	x6
	1	0	1	x9	x9
	1	1	0	x7	x7
	1	1	1	x11	x11

† f(CPU Clock) = f(CLKIN) x (PLL mode)

Table 17. TMS320C6203B GNZ Package PLL Multiply and Bypass (x1) Options†

GNZ PACKAGE 27 x 27 mm BGA				
BIT (PIN NO.)	CLKMODE2 (N/A)‡	CLKMODE1 (C11)	CLKMODE0 (B15)	DEVICES AND PLL CLOCK OPTIONS
Value	N/A	0	0	Bypass (x1)
		0	1	x4
		1	0	x8
		1	1	x10

† f(CPU Clock) = f(CLKIN) x (PLL mode)
‡ The CLKMODE2 pin is *not* available (N/A) for the C6203B GNZ package.

clock PLL (continued)

Table 18. TMS320C6203B PLL Component Selection Table†

CLKMODE‡	CLKIN RANGE (MHz)	CPU CLOCK FREQUENCY RANGE (MHz)	CLKOUT2 RANGE (MHz)	R1 [±1%] (Revision No.)	C1 [±10%] (Revision No.)	C2 [±10%] (Revision No.)	TYPICAL LOCK TIME (μs)
x4	32.5–75	130–300	65–150	60.4 Ω (1.x) 45.3 Ω (2.x, 3.x)	27 nF (1.x) 47 nF (2.x, 3.x)	560 pF (1.x) 10 pF (2.x, 3.x)	75
x6	21.7–50						
x7	18.6–42.9						
x8	16.3–37.5						
x9	14.4–33.3						
x10	13–30						
x11	11.8–27.3						

† Under some operating conditions, the maximum PLL lock time may vary by as much as 150% from the specified typical value. For example, if the typical lock time is specified as 100 μs, the maximum value may be as long as 250 μs.

‡ CLKMODE x1, x4, x6, x7, x8, x9, x10, and x11 apply to the GLS/GNY devices. The GNZ device is restricted to x1, x4, x8, and x10 multiply factors.

power-down mode logic

Figure 7 shows the power-down logic on for the 6203B.

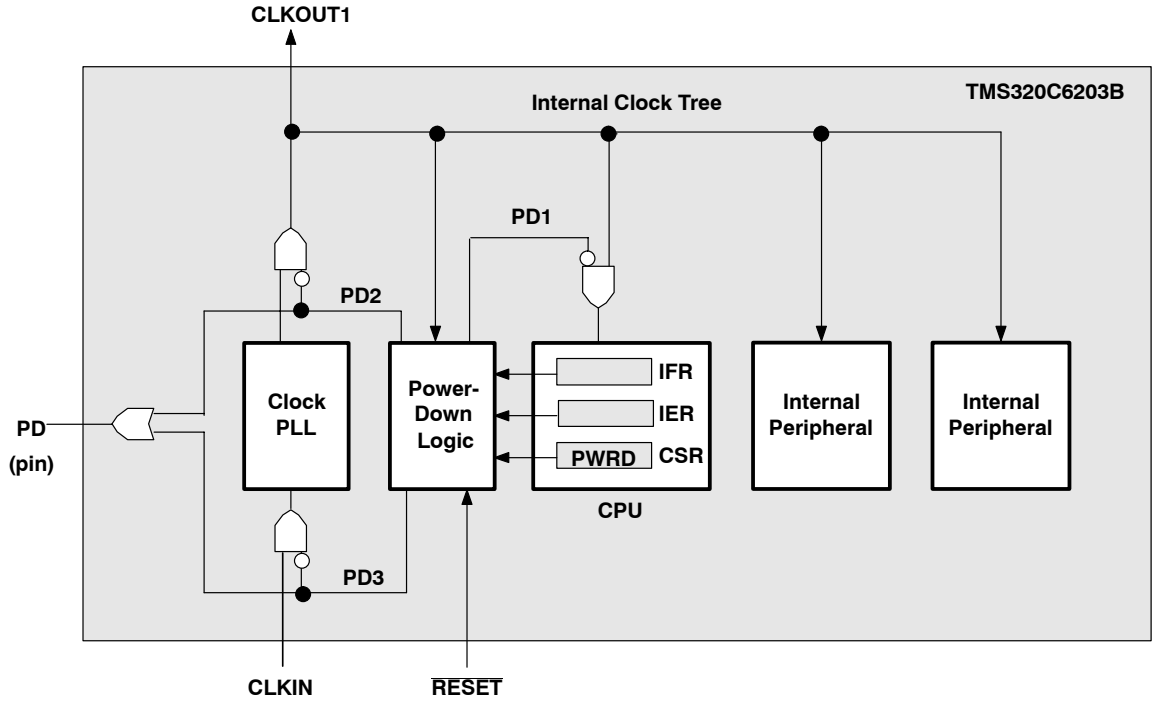

Figure 7. Power-Down Mode Logic

triggering, wake-up, and effects

The power-down modes and their wake-up methods are programmed by setting the PWRD field (bits 10–15) of the control status register (CSR). The PWRD field of the CSR is shown in Figure 8 and described in Table 19. When writing to the CSR, all bits of the PWRD field should be set at the same time. Logic 0 should be used when writing to the reserved bit (bit 15) of the PWRD field. The CSR is discussed in detail in the *TMS320C6000 CPU and Instruction Set Reference Guide* (literature number SPRU189).

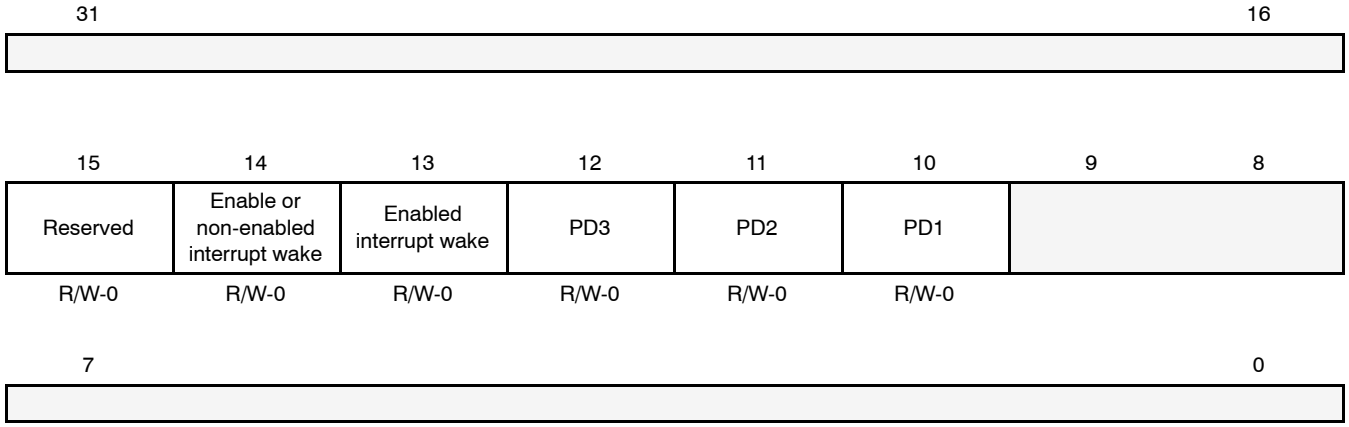

Legend: R/W–x = Read/write reset value

NOTE: The shadowed bits are not part of the power-down logic discussion and therefore are not covered here. For information on these other bit fields in the CSR register, see the *TMS320C6000 CPU and Instruction Set Reference Guide* (literature number SPRU189).

Figure 8. PWRD Field of the CSR Register

Power-down mode PD1 takes effect eight to nine clock cycles after the instruction that sets the PWRD bits in the CSR.

If PD1 mode is terminated by a non-enabled interrupt, the program execution returns to the instruction where PD1 took effect . If PD1 mode is terminated by an enabled interrupt, the interrupt service routine will be executed first, then the program execution returns to the instruction where PD1 took effect. The GIE bit in CSR and the NMIE bit in the interrupt enable register (IER) must also be set in order for the interrupt service routine to execute; otherwise, execution returns to the instruction where PD1 took effect upon PD1 mode termination by an enabled interrupt.

PD2 and PD3 modes can only be aborted by device reset. Table 19 summarizes all the power-down modes.

triggering, wake-up, and effects (continued)

Table 19. Characteristics of the Power-Down Modes

PRWD BITS 15–10	POWER-DOWN MODE	WAKE-UP METHOD	EFFECT ON CHIP'S OPERATION
000000	No power-down	—	
001001	PD1	Wake by an enabled interrupt	CPU halted (except for the interrupt logic) Power-down mode blocks the internal clock inputs at the boundary of the CPU, preventing most of its logic from switching. During PD1, DMA transactions can proceed between peripherals and internal memory.
010001	PD1	Wake by an enabled or non-enabled interrupt	
011010	PD2†	Wake by a device reset	Output clock from PLL is halted, stopping the internal clock structure from switching and resulting in the entire chip being halted. Signal terminal PD is driven high. All register and internal RAM contents are preserved. All functional I/O "freeze" in the last state when the PLL clock is turned off.‡
011100	PD3†	Wake by a device reset	Input clock to the PLL stops generating clocks. Signal terminal PD is driven high. All register and internal RAM contents are preserved. All functional I/O "freeze" in the last state when the PLL clock is turned off.† Following reset, the PLL needs time to re-lock, just as it does following power-up. Wake-up from PD3 takes longer than wake-up from PD2 because the PLL needs to be re-locked.
other	Reserved	—	

† On the C6203B, both the PD2 and PD3 signals assert the PD pin for external recognition of these two power-down modes.
‡ When entering PD2 and PD3, all functional I/O will remain in the previous state. However, for peripherals which are asynchronous in nature (HPI) or peripherals with an external clock source (McBSP, XBUS, timers), output signals may transition in response to stimulus on the inputs. Peripheral operation may not perform as intended under these conditions.

peripheral power-down mode for TMS320C6203B

The C6203B has the ability to turn off clocks to individual peripherals on the device. This feature allows the user to selectively turn off peripherals which are not being used for a specific application and not pay the extra price in power consumption for unused peripherals.

The Figure 9 title displays the peripheral power down register address location and Figure 9 itself shows the register fields.

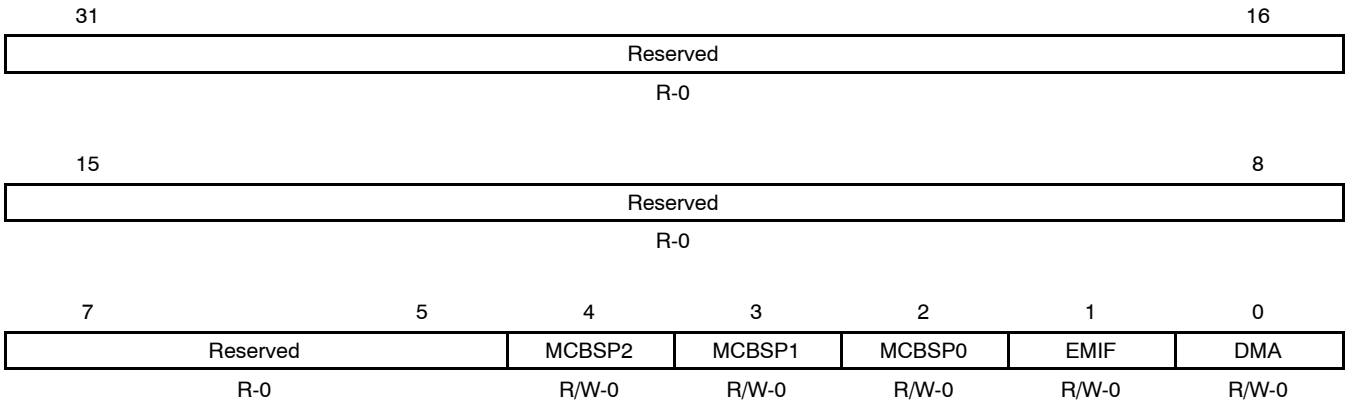

Legend: R/W–x = Read/write reset value

Figure 9. Peripheral Power-Down Control Register (PDCTL) for TMS320C6203B (019C 0200h)

peripheral power-down mode for TMS320C6203B (continued)

Table 20 lists and describes the fields in the peripheral power-down control register (PDCTL).

Table 20. Power-Down Control Register (PDCTL) Field Desccriptions

BIT	FIELD	VALUE	DESCRIPTION
31–5	Reserved		Reserved. The reserved bit location is always read as zero. A value written to this field has no effect.
4	MCBSP2		Internal McBSP2 clock enable bit.
		0	Internal McBSP2 clock is enabled.
		1	Internal McBSP2 clock is disabled. McBSP2 is not functional.
3	MCBSP1		Internal McBSP1 clock enable bit.
		0	Internal McBSP1 clock is enabled.
		1	Internal McBSP1 clock is disabled. McBSP1 is not functional.
2	MCBSP0		Internal McBSP0 clock enable bit.
		0	Internal McBSP0 clock is enabled.
		1	Internal McBSP0 clock is disabled. McBSP1 is not functional.
1	EMIF		Internal EMIF clock enable bit.
		0	Internal EMIF clock is enabled.
		1	Internal EMIF clock is disabled. EMIF is not functional.
0	DMA		Internal DMA clock enable bit.
		0	Internal DMA clock is enabled.
		1	Internal DMA clock is disabled. DMA is not functional.

The user must be careful to not disable a portion of the device which is being used, since the peripheral becomes non-operational once disabled. A clock-off mode can be entered and exited depending on the needs of the application. For example, if an application does not need the serial ports, the ports can be disabled and then re-enabled when needed. While a peripheral is in power-down mode, no writes to the peripheral's registers will occur; and reads from the peripheral will produce invalid data.

When re-enabling any of the peripheral power-down bits, the CPU should wait at least 5 additional clock cycles before attempting to access that peripheral.

power-supply sequencing

TI DSPs do not require specific power sequencing between the core supply and the I/O supply. However, systems should be designed to ensure that neither supply is powered up for extended periods of time (>1 second) if the other supply is below the proper operating voltage.

system-level design considerations

System-level design considerations, such as bus contention, may require supply sequencing to be implemented. In this case, the core supply should be powered up at the same time as, or prior to (and powered down after), the I/O buffers. This is to ensure that the I/O buffers receive valid inputs from the core before the output buffers are powered up, therefore, preventing bus contention with other chips on the board.

power-supply design considerations

A dual-power supply with simultaneous sequencing can be used to eliminate the delay between core and I/O power up. A Schottky diode can also be used to tie the core rail to the I/O rail (see Figure 10).

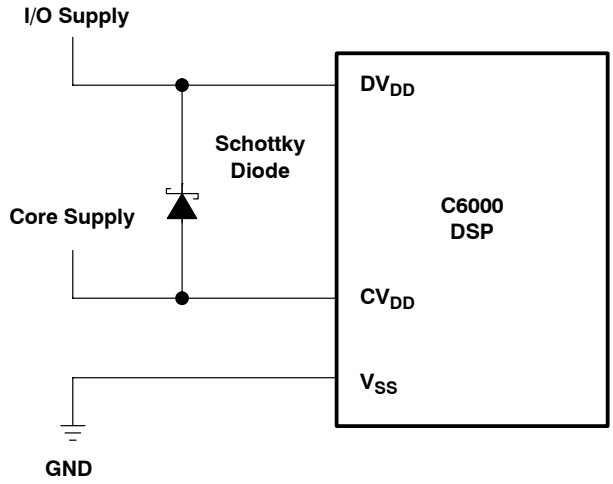

Figure 10. Schottky Diode Diagram

Core and I/O supply voltage regulators should be located close to the DSP (or DSP array) to minimize inductance and resistance in the power delivery path. Additionally, when designing for high-performance applications utilizing the C6000 platform of DSPs, the PC board should include separate power planes for core, I/O, and ground, all bypassed with high-quality low-ESL/ESR capacitors.

On systems using C62x and C67x DSPs, the core may consume in excess of 2 A per DSP until the I/O supply powers on. This extra current results from uninitialized logic within the DSP(s). A normal current state returns once the I/O power supply turns on and the CPU sees a clock pulse. Decreasing the amount of time between the core supply power-up and the I/O supply power-up reduces the effects of the current draw. If the external supply to the DSP core cannot supply the excess current, the minimum core voltage may not be achieved until after normal current returns. This voltage starvation of the core supply during power up does not affect run-time operation. Voltage starvation can affect power supply systems that gate the I/O supply via the core supply, causing the I/O supply to never turn on. During the transition from excess to normal current, a voltage spike may be seen on the core supply. Care must be taken when designing overvoltage protection circuitry on the core supply to not restart the power sequence due to this spike. Otherwise, the supply may cycle indefinitely.

IEEE 1149.1 JTAG compatibility statement

For compatibility with IEEE 1149.1 JTAG programmers, the $\overline{\text{TRST}}$ pin may need to be externally pulled up via a 1-kΩ resistor. For these C62x devices, this pin is internally pulled down, holding the JTAG port in reset by default. This is typically only a problem in systems where the DSP shares a scan chain with some other device. Some JTAG programmers for these other devices do not actively drive $\overline{\text{TRST}}$ high, leaving the scan chain inoperable while the C62x JTAG port is held in reset. TI emulators *do* drive $\overline{\text{TRST}}$ high, so the external pullup resistor is not needed in systems where TI emulators are the only devices that control JTAG scan chains on which the DSP(s) reside. If the system has other devices in the same scan chain as the DSP, and the programmer for these devices does *not* drive $\overline{\text{TRST}}$ high, then an external 1-kΩ pullup resistor is required.

With this external 1-kΩ pullup resistor installed, care must be taken to keep the DSP in a usable state under all circumstances. When $\overline{\text{TRST}}$ is pulled up, the JTAG driver must maintain the TMS signal high for 5 TCLK cycles, forcing the DSP(s) into the test logic reset (TLR) state. From the TLR state, the DSP's data scan path can be put in bypass (scan all 1s into the IR) to scan the other devices. The TLR state also allows normal operation of the DSP. If operation without anything driving the JTAG port is desired, the pullup resistor should be jumpered so that it may be engaged for programming the other devices and disconneted for running without a JTAG programmer or emulator.

absolute maximum ratings over operating case temperature ranges (unless otherwise noted)†

Supply voltage range, CV_{DD} (see Note 1) . . . . . – 0.3 V to 1.8 V
Supply voltage range, DV_{DD} (see Note 1) . . . . . –0.3 V to 4 V
Input voltage range . . . . . –0.3 V to 4 V
Output voltage range . . . . . –0.3 V to 4 V
Operating case temperature ranges, T_C: (default) . . . . . 0°C to 90°C
(A version): C6203BGNZA-250 . . . . . –40°C to105°C
Storage temperature range, T_{stg} . . . . . –65°C to 150°C
Temperature cycle range, (1000-cycle performance) . . . . . –40°C to 125°C

† Stresses beyond those listed under “absolute maximum ratings” may cause permanent damage to the device. These are stress ratings only, and functional operation of the device at these or any other conditions beyond those indicated under “recommended operating conditions” is not implied. Exposure to absolute-maximum-rated conditions for extended periods may affect device reliability.

NOTE 1: All voltage values are with respect to V_{SS}.

recommended operating conditions

			MIN	NOM	MAX	UNIT
CV_{DD}	Supply voltage, Core		1.43	1.5	1.57	V
	Supply voltage, Core‡		1.65	1.7	1.75	V
DV_{DD}	Supply voltage, I/O		3.14	3.3	3.46	V
V_{SS}	Supply ground		0	0	0	V
V_{IH}	High-level input voltage		2			V
V_{IL}	Low-level input voltage				0.8	V
I_{OH}	High-level output current				–8	mA
I_{OL}	Low-level output current				8	mA
T_C	Operating case temperature	Default	0		90	°C
		A version: C6203BGNZA-250	–40		105	°C

‡ Supply voltage, Core for the C6203B 1.7 V devices which are identified in the orderable part number with a “17” following the device number and the package type identifiers.

electrical characteristics over recommended ranges of supply voltage and operating case temperature (unless otherwise noted)

PARAMETER		TEST CONDITIONS	MIN	TYP	MAX	UNIT
V_{OH}	High-level output voltage	DV_{DD} = MIN, I_{OH} = MAX	2.4			V
V_{OL}	Low-level output voltage	DV_{DD} = MIN, I_{OL} = MAX			0.6	V
I_I	Input current§	$V_I = V_{SS}$ to DV_{DD}			±10	uA
I_{OZ}	Off-state output current	$V_O = DV_{DD}$ or 0 V			±10	uA
I_{DD2V}	Supply current, CPU + CPU memory access¶	C6203B, CV_{DD} = NOM, CPU clock = 300 MHz		510		mA
I_{DD2V}	Supply current, peripherals¶	C6203B, CV_{DD} = NOM, CPU clock = 300 MHz		352		mA
I_{DD3V}	Supply current, I/O pins¶	C6203B, CV_{DD} = NOM, CPU clock = 300 MHz		67		mA
C_i	Input capacitance				10	pF
C_o	Output capacitance				10	pF

§ TMS and TDI are not included due to internal pullups. $\overline{TRST}$ is not included due to internal pulldown.

¶ Measured with average activity (50% high / 50% low power). For more details on CPU, peripheral, and I/O activity, see the *TMS320C62x/C67x Power Consumption Summary* application report (literature number SPRA486).

PARAMETER MEASUREMENT INFORMATION

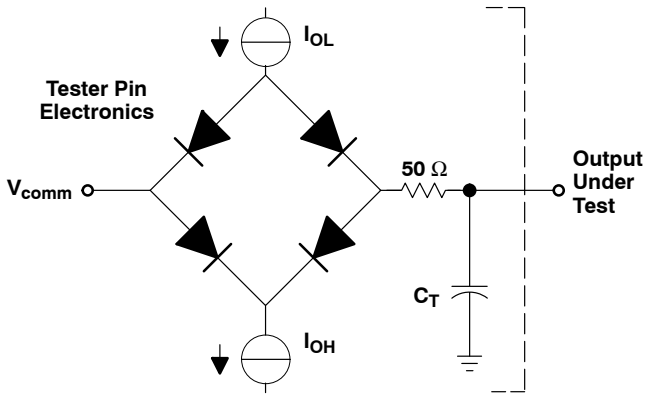

Where: I_{OL} = 2 mA
I_{OH} = 2 mA
V_{comm} = 1.5 V
C_T = 15-pF typical load-circuit capacitance

Figure 11. Test Load Circuit for AC Timing Measurements

signal transition levels

All input and output timing parameters are referenced to 1.5 V for both “0” and “1” logic levels.

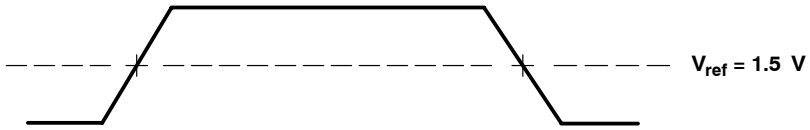

Figure 12. Input and Output Voltage Reference Levels for ac Timing Measurements

All rise and fall transition timing parameters are referenced to V_{IL} MAX and V_{IH} MIN for input clocks, and V_{OL} MAX and V_{OH} MIN for output clocks.

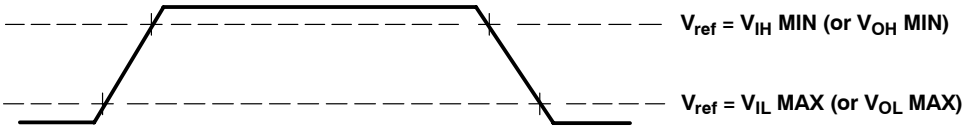

Figure 13. Rise and Fall Transition Time Voltage Reference Levels

PARAMETER MEASUREMENT INFORMATION (CONTINUED)

timing parameters and board routing analysis

The timing parameter values specified in this data sheet do *not* include delays by board routings. As a good board design practice, such delays must *always* be taken into account. Timing values may be adjusted by increasing/decreasing such delays. TI recommends utilizing the available I/O buffer information specification (IBIS) models to analyze the timing characteristics correctly. To properly use IBIS models to attain accurate timing analysis for a given system, see the *Using IBIS Models for Timing Analysis* application report (literature number SPRA839). If needed, external logic hardware such as buffers may be used to compensate any timing differences.

For inputs, timing is most impacted by the round-trip propagation delay from the DSP to the external device and from the external device to the DSP. This round-trip delay tends to negatively impact the input setup time margin, but also tends to improve the input hold time margins (see Table 21 and Figure 14).

Figure 14 represents a general transfer between the DSP and an external device. The figure also represents board route delays and how they are perceived by the DSP and the external device.

Table 21. Board-Level Timings Examples (see Figure 14)

NO.	DESCRIPTION
1	Clock route delay
2	Minimum DSP hold time
3	Minimum DSP setup time
4	External device hold time requirement
5	External device setup time requirement
6	Control signal route delay
7	External device hold time
8	External device access time
9	DSP hold time requirement
10	DSP setup time requirement
11	Data route delay

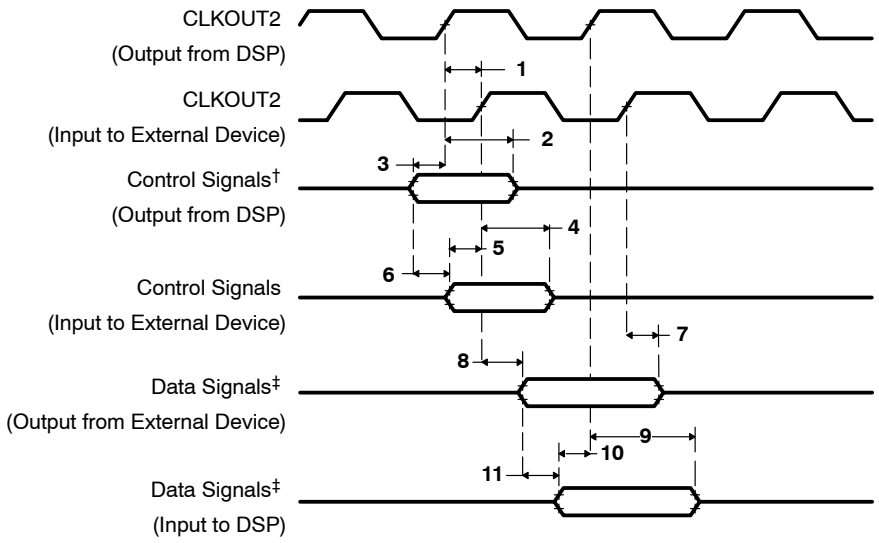

† Control signals include data for Writes.

‡ Data signals are generated during Reads from an external device.

Figure 14. Board-Level Input/Output Timings

INPUT AND OUTPUT CLOCKS

timing requirements for CLKIN (PLL used)†‡§ (see Figure 15)

NO.			-250		-300		UNIT
			MIN	MAX	MIN	MAX	
1	$t_{c(CLKIN)}$	Cycle time, CLKIN	4 * M		3.33 * M		ns
2	$t_{w(CLKINH)}$	Pulse duration, CLKIN high	0.4C		0.4C		ns
3	$t_{w(CLKINL)}$	Pulse duration, CLKIN low	0.4C		0.4C		ns
4	$t_{t(CLKIN)}$	Transition time, CLKIN		5		5	ns

† The reference points for the rise and fall transitions are measured at V_{IL} MAX and V_{IH} MIN.
‡ M = the PLL multiplier factor (x4, x6, x7, x8, x9, x10, or x11) for C6203B GLS and GNY only.
M = the PLL multiplier factor (x4, x8, or x10) for C6203B GNZ only.
For more details on both devices, see the *Clock PLL* section of this data sheet.
§ C = CLKIN cycle time in ns. For example, when CLKIN frequency is 50 MHz, use C = 20 ns.

timing requirements for CLKIN [PLL bypassed (x1)]†¶ (see Figure 15)

NO.			-250		-300		UNIT
			MIN	MAX	MIN	MAX	
1	$t_{c(CLKIN)}$	Cycle time, CLKIN	4		3.33		ns
2	$t_{w(CLKINH)}$	Pulse duration, CLKIN high	0.45C		0.45C		ns
3	$t_{w(CLKINL)}$	Pulse duration, CLKIN low	0.45C		0.45C		ns
4	$t_{t(CLKIN)}$	Transition time, CLKIN		0.6		0.6	ns

† The reference points for the rise and fall transitions are measured at V_{IL} MAX and V_{IH} MIN.
¶ C = CLKIN cycle time in ns. For example, when CLKIN frequency is 50 MHz, use C = 20 ns. The maximum CLKIN cycle time in PLL bypass mode (x1) is 200 MHz.

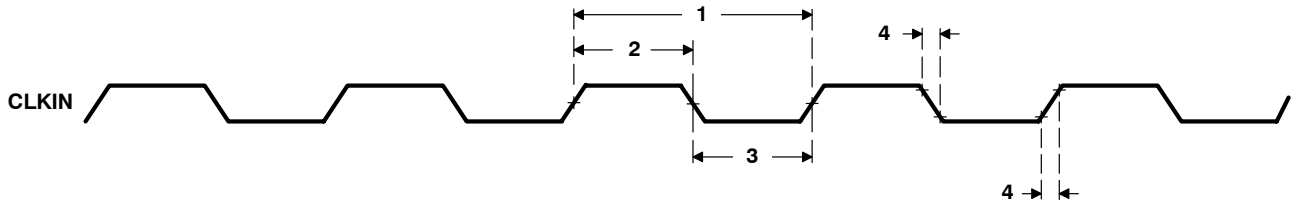

Figure 15. CLKIN Timings

INPUT AND OUTPUT CLOCKS (CONTINUED)

timing requirements for XCLKIN† (see Figure 16)

NO.			-250 -300		UNIT
			MIN	MAX	
1	$t_{c(XCLKIN)}$	Cycle time, XCLKIN	4P		ns
2	$t_{w(XCLKINH)}$	Pulse duration, XCLKIN high	1.8P		ns
3	$t_{w(XCLKINL)}$	Pulse duration, XCLKIN low	1.8P		ns

† P = 1/CPU clock frequency in nanoseconds (ns).

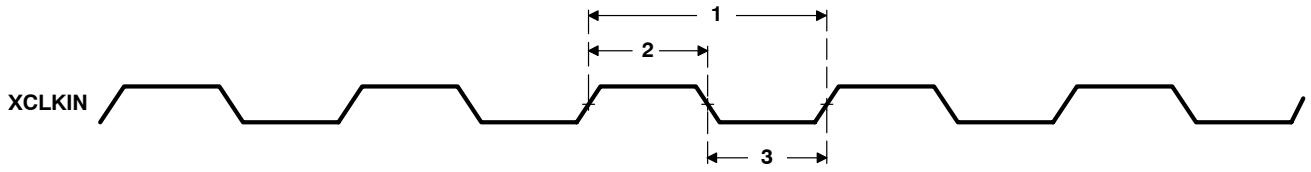

Figure 16. XCLKIN Timings

switching characteristics over recommended operating conditions for CLKOUT2‡§ (see Figure 17)

NO.	PARAMETER		-250 -300		UNIT
			MIN	MAX	
2	$t_{w(CKO2H)}$	Pulse duration, CLKOUT2 high	P – 0.7	P + 0.7	ns
3	$t_{w(CKO2L)}$	Pulse duration, CLKOUT2 low	P – 0.7	P + 0.7	ns

‡ P = 1/CPU clock frequency in ns.
§ The reference points for the rise and fall transitions are measured at V_{OL} MAX and V_{OH} MIN.

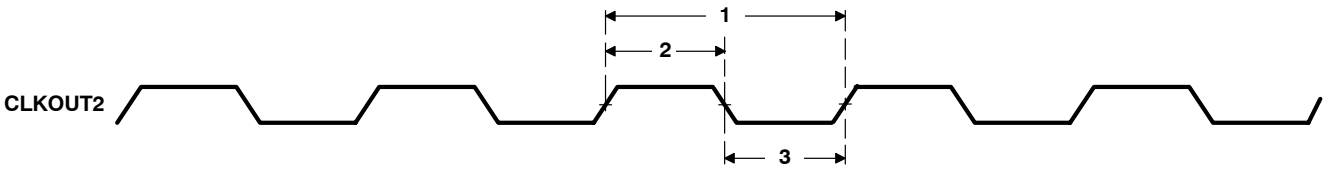

Figure 17. CLKOUT2 Timings

INPUT AND OUTPUT CLOCKS (CONTINUED)

switching characteristics over recommended operating conditions for XFCLK†‡ (see Figure 18)

NO.	PARAMETER		-250 -300		UNIT
			MIN	MAX	
1	$t_{c(XFCK)}$	Cycle time, XFCLK	D * P – 0.7	D * P + 0.7	ns
2	$t_{w(XFCKH)}$	Pulse duration, XFCLK high	(D/2) * P – 0.7	(D/2) * P + 0.7	ns
3	$t_{w(XFCKL)}$	Pulse duration, XFCLK low	(D/2) * P – 0.7	(D/2) * P + 0.7	ns

† P = 1/CPU clock frequency in ns.
‡ D = 8, 6, 4, or 2; FIFO clock divide ratio, user-programmable

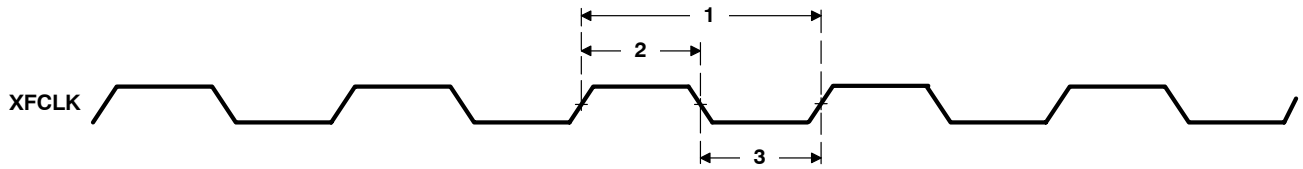

Figure 18. XFCLK Timings

ASYNCHRONOUS MEMORY TIMING

timing requirements for asynchronous memory cycles[†‡§¶] (see Figure 19 – Figure 22)

NO.			-250 -300		UNIT
			MIN	MAX	
3	$t_{su(EDV-AREH)}$	Setup time, EDx valid before $\overline{ARE}$ high	1		ns
4	$t_{h(AREH-EDV)}$	Hold time, EDx valid after $\overline{ARE}$ high	4.9		ns
6	$t_{su(ARDYH-AREL)}$	Setup time, ARDY high before $\overline{ARE}$ low	–[(RST – 3) * P – 6]		ns
7	$t_{h(AREL-ARDYH)}$	Hold time, ARDY high after $\overline{ARE}$ low	(RST – 3) * P + 2		ns
9	$t_{su(ARDYL-AREL)}$	Setup time, ARDY low before $\overline{ARE}$ low	–[(RST – 3) * P – 6]		ns
10	$t_{h(AREL-ARDYL)}$	Hold time, ARDY low after $\overline{ARE}$ low	(RST – 3) * P + 2		ns
11	$t_{w(ARDYH)}$	Pulse width, ARDY high	2P		ns
15	$t_{su(ARDYH-AWEL)}$	Setup time, ARDY high before $\overline{AWE}$ low	–[(WST – 3) * P – 6]		ns
16	$t_{h(AWEL-ARDYH)}$	Hold time, ARDY high after $\overline{AWE}$ low	(WST – 3) * P + 2		ns
18	$t_{su(ARDYL-AWEL)}$	Setup time, ARDY low before $\overline{AWE}$ low	–[(WST – 3) * P – 6]		ns
19	$t_{h(AWEL-ARDYL)}$	Hold time, ARDY low after $\overline{AWE}$ low	(WST – 3) * P + 2		ns

† To ensure data setup time, simply program the strobe width wide enough. ARDY is internally synchronized. If ARDY does meet setup or hold time, it may be recognized in the current cycle or the next cycle. Thus, ARDY can be an asynchronous input.
‡ RS = Read Setup, RST = Read Strobe, RH = Read Hold, WS = Write Setup, WST = Write Strobe, WH = Write Hold. These parameters are programmed via the EMIF CE space control registers.
§ P = 1/CPU clock frequency in ns. For example, when running parts at 300 MHz, use P = 3.33 ns.
¶ The sum of RS and RST (or WS and WST) must be a minimum of 4 in order to use ARDY input to extend strobe width.

switching characteristics over recommended operating conditions for asynchronous memory cycles[‡§¶#] (see Figure 19 – Figure 22)

NO.	PARAMETER		-250 -300			UNIT
			MIN	TYP	MAX	
1	$t_{osu(SELV-AREL)}$	Output setup time, select signals valid to $\overline{ARE}$ low	RS * P – 2			ns
2	$t_{oh(AREH-SELIV)}$	Output hold time, $\overline{ARE}$ high to select signals invalid	RH * P – 2			ns
5	$t_{w(AREL)}$	Pulse width, $\overline{ARE}$ low		RST * P		ns
8	$t_{d(ARDYH-AREH)}$	Delay time, ARDY high to $\overline{ARE}$ high	3P		4P + 5	ns
12	$t_{osu(SELV-AWEL)}$	Output setup time, select signals valid to $\overline{AWE}$ low	WS * P – 3			ns
13	$t_{oh(AWEH-SELIV)}$	Output hold time, $\overline{AWE}$ high to select signals invalid	WH * P – 2			ns
14	$t_{w(AWEL)}$	Pulse width, $\overline{AWE}$ low		WST * P		ns
17	$t_{d(ARDYH-AWEH)}$	Delay time, ARDY high to $\overline{AWE}$ high	3P		4P + 5	ns

‡ RS = Read Setup, RST = Read Strobe, RH = Read Hold, WS = Write Setup, WST = Write Strobe, WH = Write Hold. These parameters are programmed via the EMIF CE space control registers.
§ P = 1/CPU clock frequency in ns. For example, when running parts at 300 MHz, use P = 3.33 ns.
¶ The sum of RS and RST (or WS and WST) must be a minimum of 4 in order to use ARDY input to extend strobe width.
# Select signals include: $\overline{CEx}$, $\overline{BE[3:0]}$, EA[21:2], $\overline{AOE}$; and for writes, include ED[31:0], with the exception that $\overline{CEx}$ can stay active for an additional 7P ns following the end of the cycle.

ASYNCHRONOUS MEMORY TIMING (CONTINUED)

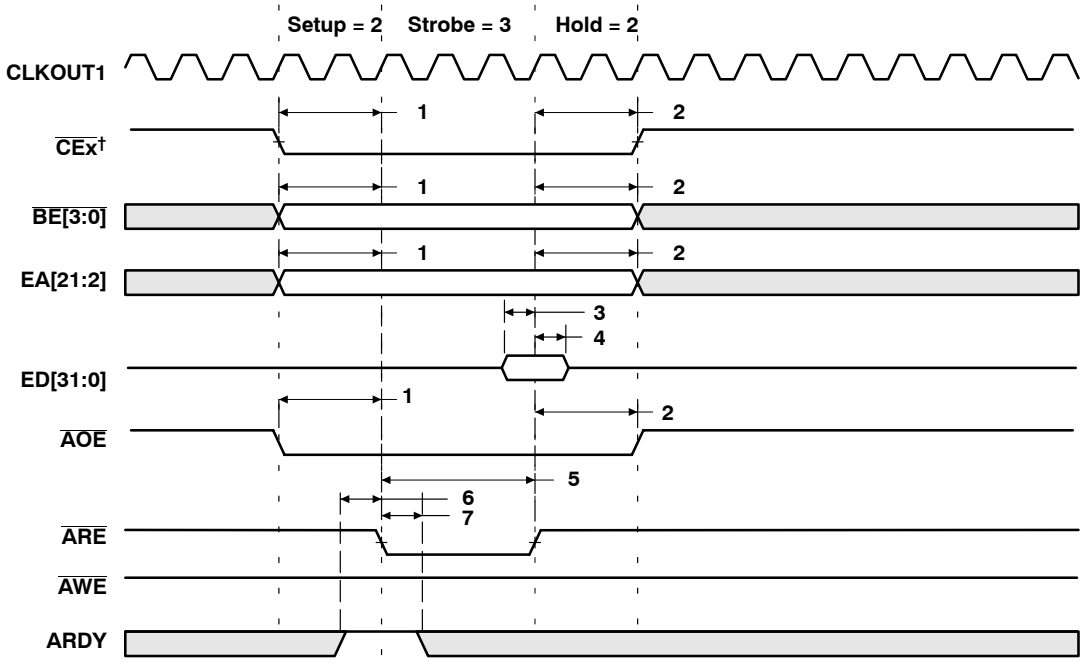

† $\overline{CEx}$ stays active for seven minus the value of Read Hold cycles after the last access (DMA transfer or CPU access). For example, if read HOLD = 1, then $\overline{CEx}$ stays active for six more cycles. This does not affect performance, it merely reflects the EMIF's overhead.

Figure 19. Asynchronous Memory Read Timing (ARDY Not Used)

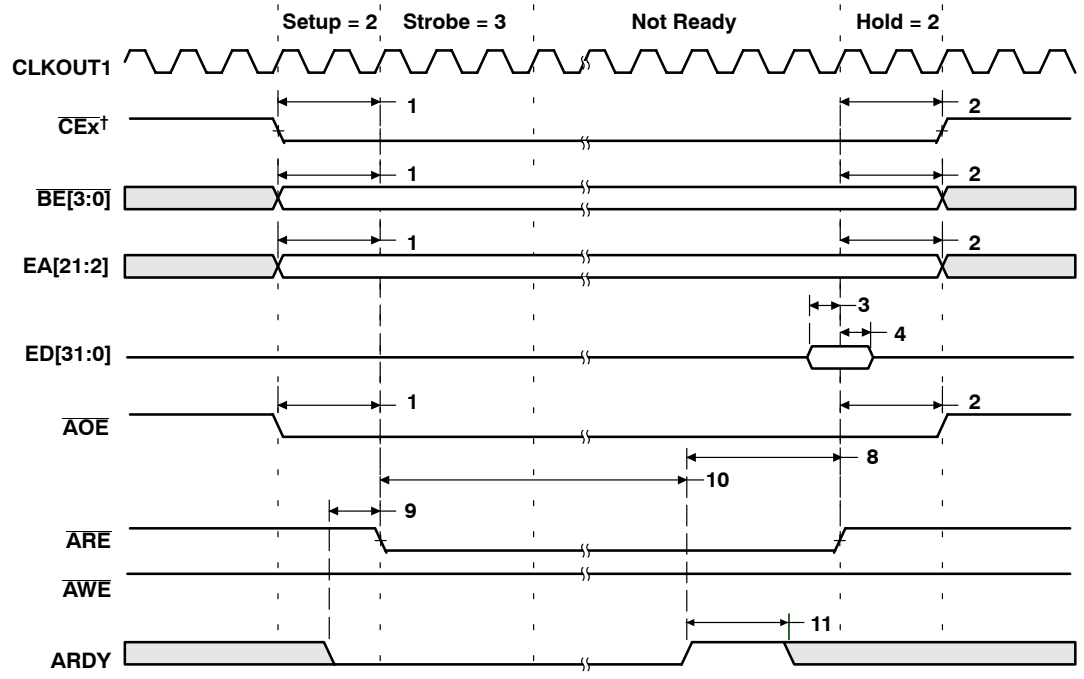

† $\overline{CEx}$ stays active for seven minus the value of Read Hold cycles after the last access (DMA transfer or CPU access). For example, if read HOLD = 1, then $\overline{CEx}$ stays active for six more cycles. This does not affect performance, it merely reflects the EMIF's overhead.

Figure 20. Asynchronous Memory Read Timing (ARDY Used)

ASYNCHRONOUS MEMORY TIMING (CONTINUED)

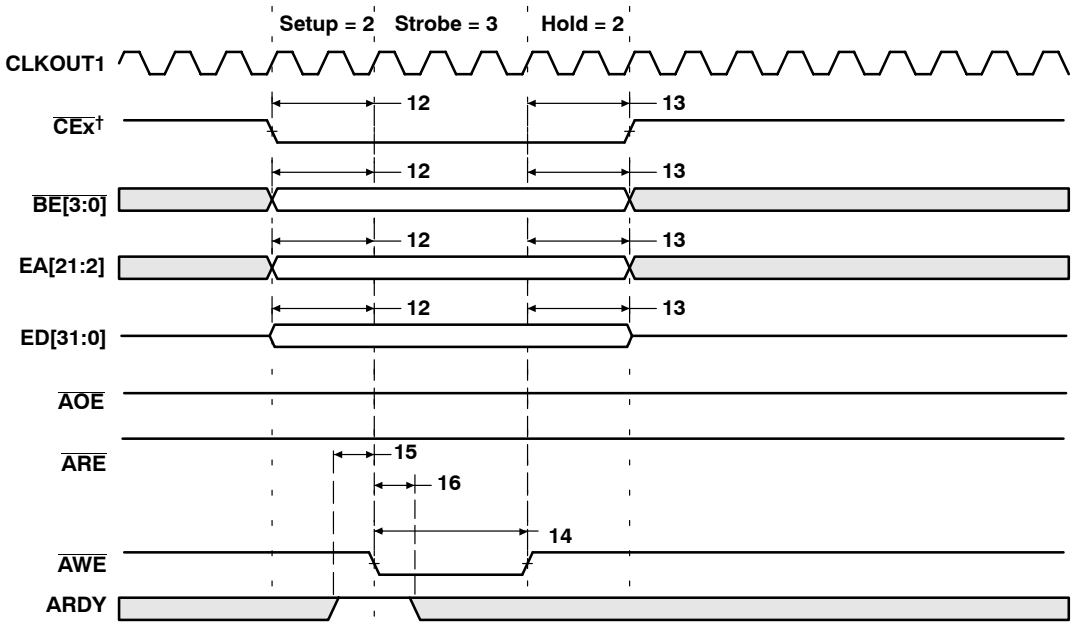

† If no write accesses are scheduled for the next cycle and write hold is set to 1 or greater, then $\overline{CEx}$ stays active for three cycles after the value of the programmed hold period. If write hold is set to 0, then $\overline{CEx}$ stays active for four more cycles. This does not affect performance, it merely reflects the EMIF's overhead.

Figure 21. Asynchronous Memory Write Timing (ARDY Not Used)

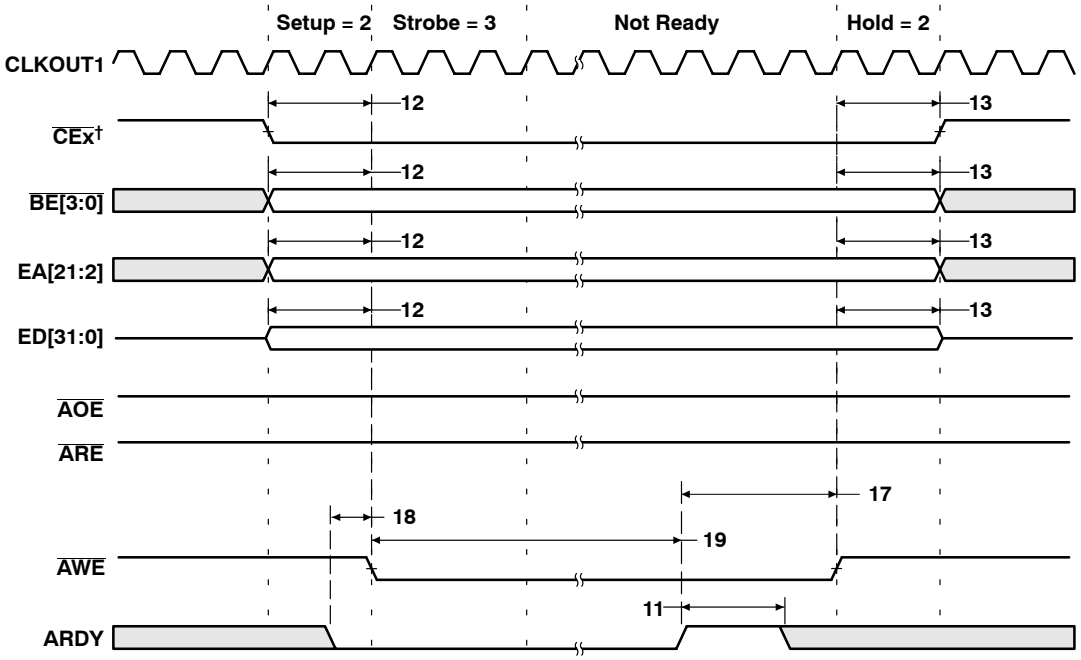

† If no write accesses are scheduled for the next cycle and write hold is set to 1 or greater, then $\overline{CEx}$ stays active for three cycles after the value of the programmed hold period. If write hold is set to 0, then $\overline{CEx}$ stays active for four more cycles. This does not affect performance, it merely reflects the EMIF's overhead.

Figure 22. Asynchronous Memory Write Timing (ARDY Used)

SYNCHRONOUS-BURST MEMORY TIMING

timing requirements for synchronous-burst SRAM cycles for C6203B Rev. 2 (see Figure 23)

NO.			-250		-300		UNIT
			MIN	MAX	MIN	MAX	
7	$t_{su(EDV-CKO2H)}$	Setup time, read EDx valid before CLKOUT2 high	2.0		1.7		ns
8	$t_{h(CKO2H-EDV)}$	Hold time, read EDx valid after CLKOUT2 high	2.0		1.5		ns

switching characteristics over recommended operating conditions for synchronous-burst SRAM cycles for C6203B Rev. 2†‡ (see Figure 23 and Figure 24)

NO.	PARAMETER		-250		-300		UNIT
			MIN	MAX	MIN	MAX	
1	$t_{osu(CEV-CKO2H)}$	Output setup time, $\overline{CEx}$ valid before CLKOUT2 high	P – 0.8		P + 0.1		ns
2	$t_{oh(CKO2H-CEV)}$	Output hold time, $\overline{CEx}$ valid after CLKOUT2 high	P – 3		P – 2.3		ns
3	$t_{osu(BEV-CKO2H)}$	Output setup time, $\overline{BEx}$ valid before CLKOUT2 high	P – 0.8		P + 0.1		ns
4	$t_{oh(CKO2H-BEIV)}$	Output hold time, $\overline{BEx}$ invalid after CLKOUT2 high	P – 3		P – 2.3		ns
5	$t_{osu(EAV-CKO2H)}$	Output setup time, EAx valid before CLKOUT2 high	P – 0.8		P + 0.1		ns
6	$t_{oh(CKO2H-EAIV)}$	Output hold time, EAx invalid after CLKOUT2 high	P – 3		P – 2.3		ns
9	$t_{osu(ADSV-CKO2H)}$	Output setup time, $\overline{SDCAS}$/$\overline{SSADS}$ valid before CLKOUT2 high	P – 0.8		P + 0.1		ns
10	$t_{oh(CKO2H-ADSV)}$	Output hold time, $\overline{SDCAS}$/$\overline{SSADS}$ valid after CLKOUT2 high	P – 3		P – 2.3		ns
11	$t_{osu(OEV-CKO2H)}$	Output setup time, $\overline{SDRAS}$/$\overline{SSOE}$ valid before CLKOUT2 high	P – 0.8		P + 0.1		ns
12	$t_{oh(CKO2H-OEV)}$	Output hold time, $\overline{SDRAS}$/$\overline{SSOE}$ valid after CLKOUT2 high	P – 3		P – 2.3		ns
13	$t_{osu(EDV-CKO2H)}$	Output setup time, EDx valid before CLKOUT2 high§	P – 1.2		P + 0.1		ns
14	$t_{oh(CKO2H-EDIV)}$	Output hold time, EDx invalid after CLKOUT2 high	P – 3		P – 2.3		ns
15	$t_{osu(WEV-CKO2H)}$	Output setup time, $\overline{SDWE}$/$\overline{SSWE}$ valid before CLKOUT2 high	P – 0.8		P + 0.1		ns
16	$t_{oh(CKO2H-WEV)}$	Output hold time, $\overline{SDWE}$/$\overline{SSWE}$ valid after CLKOUT2 high	P – 3		P – 2.3		ns

† P = 1/CPU clock frequency in ns. For example, when running parts at 300 MHz, use P = 3.33 ns.
‡ $\overline{SDCAS}$/$\overline{SSADS}$, $\overline{SDRAS}$/$\overline{SSOE}$, and $\overline{SDWE}$/$\overline{SSWE}$ operate as $\overline{SSADS}$, $\overline{SSOE}$, and $\overline{SSWE}$, respectively, during SBSRAM accesses.
§ For the first write in a series of one or more consecutive adjacent writes, the write data is generated one CLKOUT2 cycle early to accommodate the ED enable time.

SYNCHRONOUS-BURST MEMORY TIMING (CONTINUED)

timing requirements for synchronous-burst SRAM cycles for C6203B Rev. 3 (see Figure 23)

NO.			C6203BGNY173-250 C6203BGNZ173-250 C6203BGNZA-250		C6203BGNY173-300 C6203BGNY300-300 C6203BGNZ173-300 C6203BGNZ300-300		C6203BGNY3E-300		UNIT
			MIN	MAX	MIN	MAX	MIN	MAX	
7	$t_{su(EDV-CKO2H)}$	Setup time, read EDx valid before CLKOUT2 high	2.9		1.6		1.6		ns
8	$t_{h(CKO2H-EDV)}$	Hold time, read EDx valid after CLKOUT2 high	2.1		2.3		2.3		ns

switching characteristics over recommended operating conditions for synchronous-burst SRAM cycles for C6203B Rev. 3†‡ (see Figure 23 and Figure 24)

NO.	PARAMETER		C6203BGNY173-250 C6203BGNZ173-250 C6203BGNZA-250		C6203BGNY173-300 C6203BGNY300-300 C6203BGNZ173-300 C6203BGNZ300-300		C6203BGNY3E-300		UNIT
			MIN	MAX	MIN	MAX	MIN	MAX	
1	$t_{osu(CEV-CKO2H)}$	Output setup time, $\overline{CEx}$ valid before CLKOUT2 high	P – 1.7		P – 1		P – 1.5		ns
2	$t_{oh(CKO2H-CEV)}$	Output hold time, $\overline{CEx}$ valid after CLKOUT2 high	P – 3.4		P – 2.7		P – 2.7		ns
3	$t_{osu(BEV-CKO2H)}$	Output setup time, $\overline{BEx}$ valid before CLKOUT2 high	P – 1.7		P – 1		P – 1.5		ns
4	$t_{oh(CKO2H-BEIV)}$	Output hold time, $\overline{BEx}$ invalid after CLKOUT2 high	P – 3.4		P – 2.7		P – 2.7		ns
5	$t_{osu(EAV-CKO2H)}$	Output setup time, EAx valid before CLKOUT2 high	P – 1.7		P – 1		P – 1.5		ns
6	$t_{oh(CKO2H-EAIV)}$	Output hold time, EAx invalid after CLKOUT2 high	P – 3.4		P – 2.7		P – 2.7		ns
9	$t_{osu(ADSV-CKO2H)}$	Output setup time, $\overline{SDCAS}/\overline{SSADS}$ valid before CLKOUT2 high	P – 1.7		P – 1		P – 1.5		ns
10	$t_{oh(CKO2H-ADSV)}$	Output hold time, $\overline{SDCAS}/\overline{SSADS}$ valid after CLKOUT2 high	P – 3.4		P – 2.7		P – 2.7		ns

† P = 1/CPU clock frequency in ns. For example, when running parts at 300 MHz, use P = 3.33 ns.
‡ $\overline{SDCAS}/\overline{SSADS}$, $\overline{SDRAS}/\overline{SSOE}$, and $\overline{SDWE}/\overline{SSWE}$ operate as $\overline{SSADS}$, $\overline{SSOE}$, and $\overline{SSWE}$, respectively, during SBSRAM accesses.
§ For the first write in a series of one or more consecutive adjacent writes, the write data is generated one CLKOUT2 cycle early to accommodate the ED enable time.

SYNCHRONOUS-BURST MEMORY TIMING (CONTINUED)

switching characteristics over recommended operating conditions for synchronous-burst SRAM cycles for C6203B Rev. 3†‡ (see Figure 23 and Figure 24) (continued)

NO.	PARAMETER		C6203BGNY173-250 C6203BGNZ173-250 C6203BGNZA-250		C6203BGNY173-300 C6203BGNY300-300 C6203BGNZ173-300 C6203BGNZ300-300		C6203BGNY3E-300		UNIT
			MIN	MAX	MIN	MAX	MIN	MAX	
11	$t_{osu(OEV-CKO2H)}$	Output setup time, $\overline{SDRAS}/\overline{SSOE}$ valid before CLKOUT2 high	P – 1.7		P – 1		P – 1.5		ns
12	$t_{oh(CKO2H-OEV)}$	Output hold time, $\overline{SDRAS}/\overline{SSOE}$ valid after CLKOUT2 high	P – 3.4		P – 2.7		P – 2.7		ns
13	$t_{osu(EDV-CKO2H)}$	Output setup time, EDx valid before CLKOUT2 high§	P – 2.3		P – 1.6		P – 1.6		ns
14	$t_{oh(CKO2H-EDIV)}$	Output hold time, EDx invalid after CLKOUT2 high	P – 3.2		P – 2.5		P – 2.5		ns
15	$t_{osu(WEV-CKO2H)}$	Output setup time, $\overline{SDWE}/\overline{SSWE}$ valid before CLKOUT2 high	P – 1.7		P – 1		P – 1.5		ns
16	$t_{oh(CKO2H-WEV)}$	Output hold time, $\overline{SDWE}/\overline{SSWE}$ valid after CLKOUT2 high	P – 3.4		P – 2.7		P – 2.7		ns

† P = 1/CPU clock frequency in ns. For example, when running parts at 300 MHz, use P = 3.33 ns.
‡ $\overline{SDCAS}/\overline{SSADS}$, $\overline{SDRAS}/\overline{SSOE}$, and $\overline{SDWE}/\overline{SSWE}$ operate as $\overline{SSADS}$, $\overline{SSOE}$, and $\overline{SSWE}$, respectively, during SBSRAM accesses.
§ For the first write in a series of one or more consecutive adjacent writes, the write data is generated one CLKOUT2 cycle early to accommodate the ED enable time.

SYNCHRONOUS-BURST MEMORY TIMING (CONTINUED)

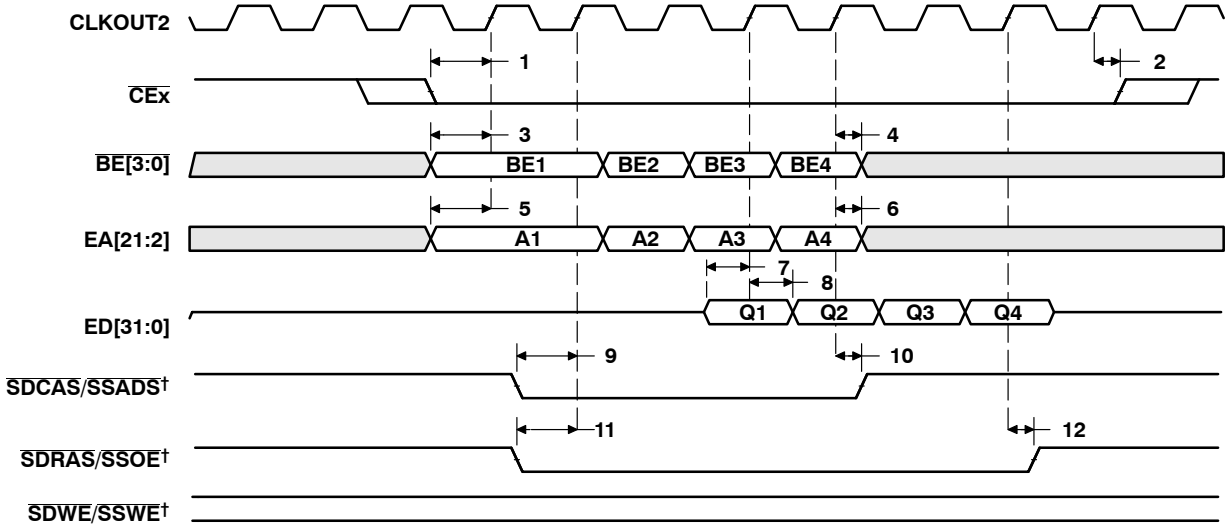

† SDCAS/SSADS, SDRAS/SSOE, and SDWE/SSWE operate as SSADS, SSOE, and SSWE, respectively, during SBSRAM accesses.

Figure 23. SBSRAM Read Timing

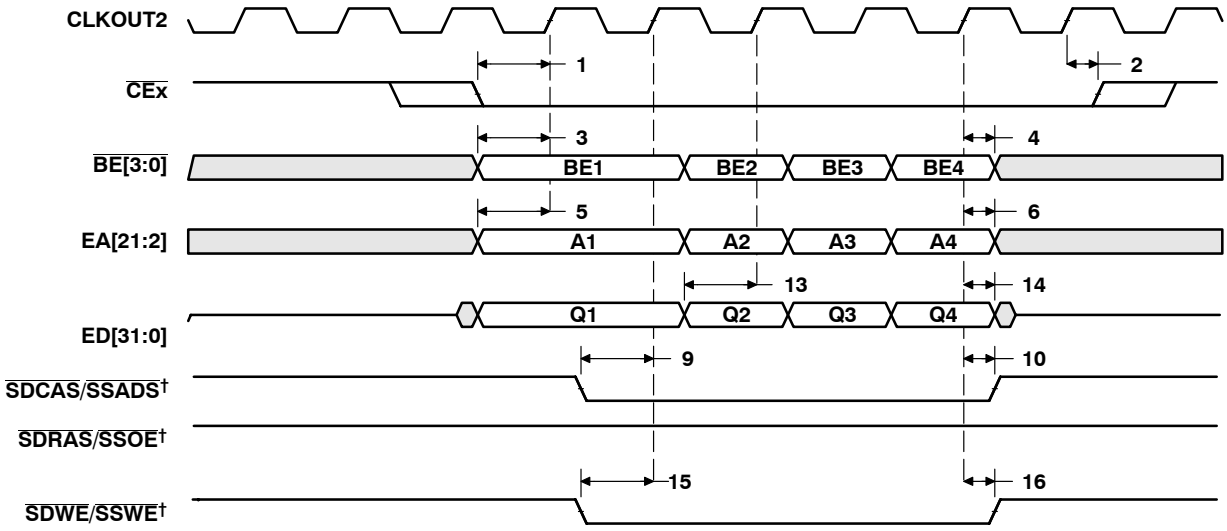

† SDCAS/SSADS, SDRAS/SSOE, and SDWE/SSWE operate as SSADS, SSOE, and SSWE, respectively, during SBSRAM accesses.

Figure 24. SBSRAM Write Timing

SYNCHRONOUS DRAM TIMING

timing requirements for synchronous DRAM cycles for C6203B Rev. 2 (see Figure 25)

NO.			-250		-300		UNIT
			MIN	MAX	MIN	MAX	
7	$t_{su(EDV-CKO2H)}$	Setup time, read EDx valid before CLKOUT2 high	1.2		0.5		ns
8	$t_{h(CKO2H-EDV)}$	Hold time, read EDx valid after CLKOUT2 high	2.7		2		ns

switching characteristics over recommended operating conditions for synchronous DRAM cycles for C6203B Rev. 2†‡ (see Figure 25–Figure 30)

NO.	PARAMETER		-250		-300		UNIT
			MIN	MAX	MIN	MAX	
1	$t_{osu(CEV-CKO2H)}$	Output setup time, $\overline{CEx}$ valid before CLKOUT2 high	P – 0.9		P + 0.6		ns
2	$t_{oh(CKO2H-CEV)}$	Output hold time, $\overline{CEx}$ valid after CLKOUT2 high	P – 2.9		P – 1.8		ns
3	$t_{osu(BEV-CKO2H)}$	Output setup time, $\overline{BEx}$ valid before CLKOUT2 high	P – 0.9		P + 0.6		ns
4	$t_{oh(CKO2H-BEIV)}$	Output hold time, $\overline{BEx}$ invalid after CLKOUT2 high	P – 2.9		P – 1.8		ns
5	$t_{osu(EAV-CKO2H)}$	Output setup time, EAx valid before CLKOUT2 high	P – 0.9		P + 0.6		ns
6	$t_{oh(CKO2H-EAIV)}$	Output hold time, EAx invalid after CLKOUT2 high	P – 2.9		P – 1.8		ns
9	$t_{osu(CASV-CKO2H)}$	Output setup time, $\overline{SDCAS}/\overline{SSADS}$ valid before CLKOUT2 high	P – 0.9		P + 0.6		ns
10	$t_{oh(CKO2H-CASV)}$	Output hold time, $\overline{SDCAS}/\overline{SSADS}$ valid after CLKOUT2 high	P – 2.9		P – 1.8		ns
11	$t_{osu(EDV-CKO2H)}$	Output setup time, EDx valid before CLKOUT2 high§	P – 1.5		P + 0.6		ns
12	$t_{oh(CKO2H-EDIV)}$	Output hold time, EDx invalid after CLKOUT2 high	P – 2.8		P – 1.8		ns
13	$t_{osu(WEV-CKO2H)}$	Output setup time, $\overline{SDWE}/\overline{SSWE}$ valid before CLKOUT2 high	P – 0.9		P + 0.6		ns
14	$t_{oh(CKO2H-WEV)}$	Output hold time, $\overline{SDWE}/\overline{SSWE}$ valid after CLKOUT2 high	P – 2.9		P – 1.8		ns
15	$t_{osu(SDA10V-CKO2H)}$	Output setup time, SDA10 valid before CLKOUT2 high	P – 0.9		P + 0.6		ns
16	$t_{oh(CKO2H-SDA10IV)}$	Output hold time, SDA10 invalid after CLKOUT2 high	P – 2.9		P – 1.8		ns
17	$t_{osu(RASV-CKO2H)}$	Output setup time, $\overline{SDRAS}/\overline{SSOE}$ valid before CLKOUT2 high	P – 0.9		P + 0.6		ns
18	$t_{oh(CKO2H-RASV)}$	Output hold time, $\overline{SDRAS}/\overline{SSOE}$ valid after CLKOUT2 high	P – 2.9		P – 1.8		ns

† P = 1/CPU clock frequency in ns. For example, when running parts at 300 MHz, use P = 3.33 ns.
‡ $\overline{SDCAS}/\overline{SSADS}$, $\overline{SDRAS}/\overline{SSOE}$, and $\overline{SDWE}/\overline{SSWE}$ operate as $\overline{SDCAS}$, $\overline{SDRAS}$, and $\overline{SDWE}$, respectively, during SDRAM accesses.
§ For the first write in a series of one or more consecutive adjacent writes, the write data is generated one CLKOUT2 cycle early to accommodate the ED enable time.

SYNCHRONOUS DRAM TIMING (CONTINUED)

timing requirements for synchronous DRAM cycles for C6203B Rev. 3 (see Figure 25)

NO.			C6203BGNY173-250 C6203BGNZ173-250 C6203BGNZA-250		C6203BGNY173-300 C6203BGNY300-300 C6203BGNZ173-300 C6203BGNZ300-300		C6203BGNY3E-300		UNIT
			MIN	MAX	MIN	MAX	MIN	MAX	
7	$t_{su(EDV-CKO2H)}$	Setup time, read EDx valid before CLKOUT2 high	1.3		0		0		ns
8	$t_{h(CKO2H-EDV)}$	Hold time, read EDx valid after CLKOUT2 high	2.3		2.3		2.7		ns

SYNCHRONOUS DRAM TIMING (CONTINUED)

switching characteristics over recommended operating conditions for synchronous DRAM cycles for C6203B Rev. 3†‡ (see Figure 25–Figure 30)

NO.	PARAMETER		C6203BGNY173-250 C6203BGNZ173-250 C6203BGNZA-250		C6203BGNY173-300 C6203BGNY300-300 C6203BGNZ173-300 C6203BGNZ300-300		C6203BGNY3E-300		UNIT
			MIN	MAX	MIN	MAX	MIN	MAX	
1	$t_{osu(CEV-CKO2H)}$	Output setup time, $\overline{CEx}$ valid before CLKOUT2 high	P – 1.7		P – 1		P – 1.5		ns
2	$t_{oh(CKO2H-CEV)}$	Output hold time, $\overline{CEx}$ valid after CLKOUT2 high	P – 3		P – 2.3		P – 2.3		ns
3	$t_{osu(BEV-CKO2H)}$	Output setup time, $\overline{BEx}$ valid before CLKOUT2 high	P – 1.7		P – 1		P – 1.5		ns
4	$t_{oh(CKO2H-BEIV)}$	Output hold time, $\overline{BEx}$ invalid after CLKOUT2 high	P – 3		P – 2.3		P – 2.3		ns
5	$t_{osu(EAV-CKO2H)}$	Output setup time, EAx valid before CLKOUT2 high	P – 1.7		P – 1		P – 1.5		ns
6	$t_{oh(CKO2H-EAIV)}$	Output hold time, EAx invalid after CLKOUT2 high	P – 3		P – 2.3		P – 2.3		ns
9	$t_{osu(CASV-CKO2H)}$	Output setup time, $\overline{SDCAS}$/$\overline{SSADS}$ valid before CLKOUT2 high	P – 1.7		P – 1		P – 1.5		ns
10	$t_{oh(CKO2H-CASV)}$	Output hold time, $\overline{SDCAS}$/$\overline{SSADS}$ valid after CLKOUT2 high	P – 3		P – 2.3		P – 2.3		ns
11	$t_{osu(EDV-CKO2H)}$	Output setup time, EDx valid before CLKOUT2 high§	P – 2.3		P – 1.6		P – 1.5		ns

† P = 1/CPU clock frequency in ns. For example, when running parts at 300 MHz, use P = 3.33 ns.
‡ $\overline{SDCAS}$/$\overline{SSADS}$, $\overline{SDRAS}$/$\overline{SSOE}$, and $\overline{SDWE}$/$\overline{SSWE}$ operate as $\overline{SDCAS}$, $\overline{SDRAS}$, and $\overline{SDWE}$, respectively, during SDRAM accesses.
§ For the first write in a series of one or more consecutive adjacent writes, the write data is generated one CLKOUT2 cycle early to accommodate the ED enable time.

SYNCHRONOUS DRAM TIMING (CONTINUED)

switching characteristics over recommended operating conditions for synchronous DRAM cycles for C6203B Rev. 3†‡ (see Figure 25–Figure 30) (continued)

NO.	PARAMETER		C6203BGNY173-250 C6203BGNZ173-250 C6203BGNZA-250		C6203BGNY173-300 C6203BGNY300-300 C6203BGNZ173-300 C6203BGNZ300-300		C6203BGNY3E-300		UNIT
			MIN	MAX	MIN	MAX	MIN	MAX	
12	$t_{oh(CKO2H-EDIV)}$	Output hold time, EDx invalid after CLKOUT2 high	P – 2.7		P – 2		P – 2		ns
13	$t_{osu(WEV-CKO2H)}$	Output setup time, $\overline{SDWE}$/$\overline{SSWE}$ valid before CLKOUT2 high	P – 1.7		P – 1		P – 1.5		ns
14	$t_{oh(CKO2H-WEV)}$	Output hold time, $\overline{SDWE}$/$\overline{SSWE}$ valid after CLKOUT2 high	P – 3		P – 2.3		P – 2.3		ns
15	$t_{osu(SDA10V-CKO2H)}$	Output setup time, SDA10 valid before CLKOUT2 high	P – 1.7		P – 1		P – 1.5		ns
16	$t_{oh(CKO2H-SDA10IV)}$	Output hold time, SDA10 invalid after CLKOUT2 high	P – 3		P – 2.3		P – 2.3		ns
17	$t_{osu(RASV-CKO2H)}$	Output setup time, $\overline{SDRAS}$/$\overline{SSOE}$ valid before CLKOUT2 high	P – 1.7		P – 1		P – 1.5		ns
18	$t_{oh(CKO2H-RASV)}$	Output hold time, $\overline{SDRAS}$/$\overline{SSOE}$ valid after CLKOUT2 high	P – 3		P – 2.3		P – 2.3		ns

† P = 1/CPU clock frequency in ns. For example, when running parts at 300 MHz, use P = 3.33 ns.
‡ $\overline{SDCAS}$/$\overline{SSADS}$, $\overline{SDRAS}$/$\overline{SSOE}$, and $\overline{SDWE}$/$\overline{SSWE}$ operate as $\overline{SDCAS}$, $\overline{SDRAS}$, and $\overline{SDWE}$, respectively, during SDRAM accesses.
§ For the first write in a series of one or more consecutive adjacent writes, the write data is generated one CLKOUT2 cycle early to accommodate the ED enable time.

SYNCHRONOUS DRAM TIMING (CONTINUED)

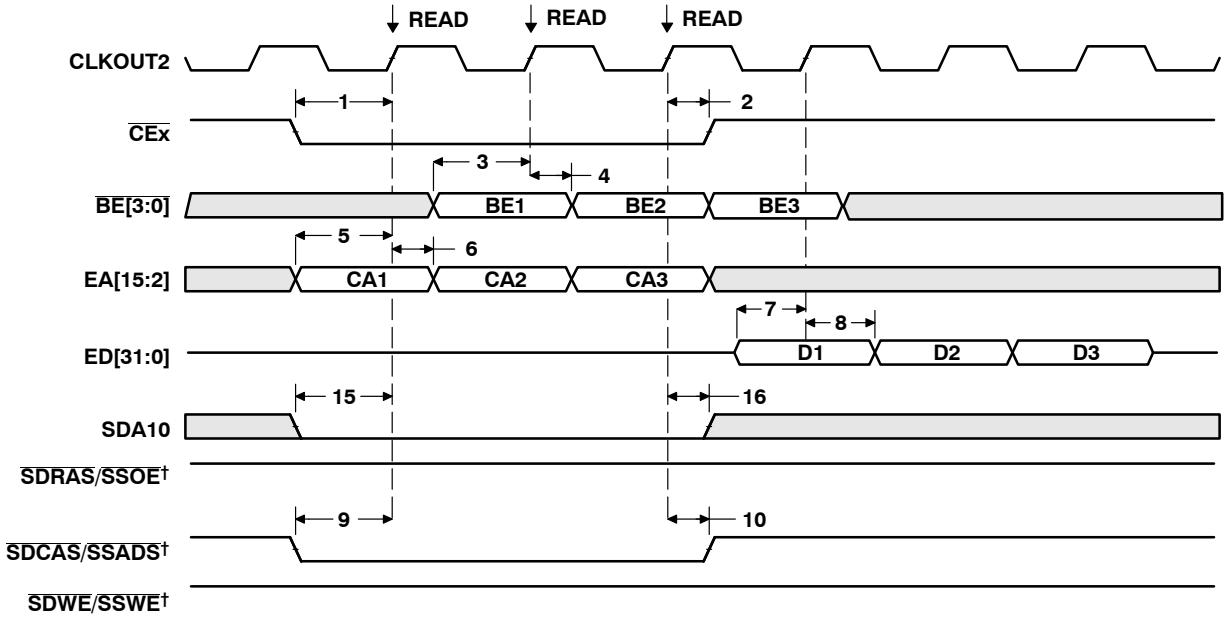

† SDCAS/SSADS, SDRAS/SSOE, and SDWE/SSWE operate as SDCAS, SDRAS, and SDWE, respectively, during SDRAM accesses.

Figure 25. Three SDRAM READ Commands

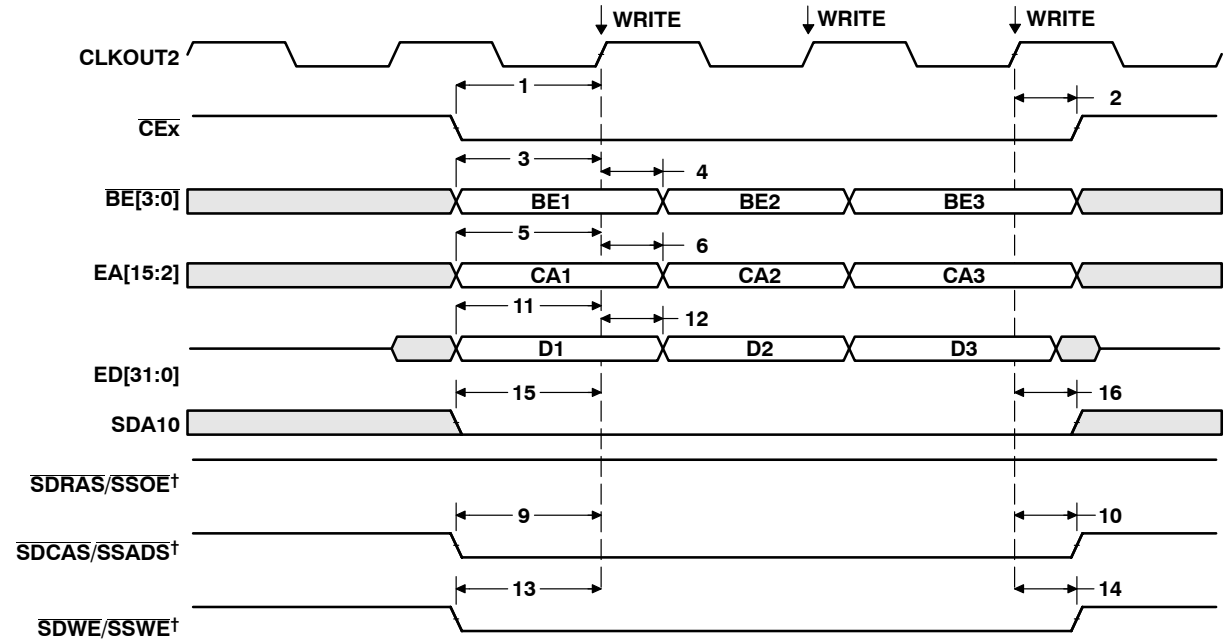

† SDCAS/SSADS, SDRAS/SSOE, and SDWE/SSWE operate as SDCAS, SDRAS, and SDWE, respectively, during SDRAM accesses.

Figure 26. Three SDRAM WRT Commands

SYNCHRONOUS DRAM TIMING (CONTINUED)

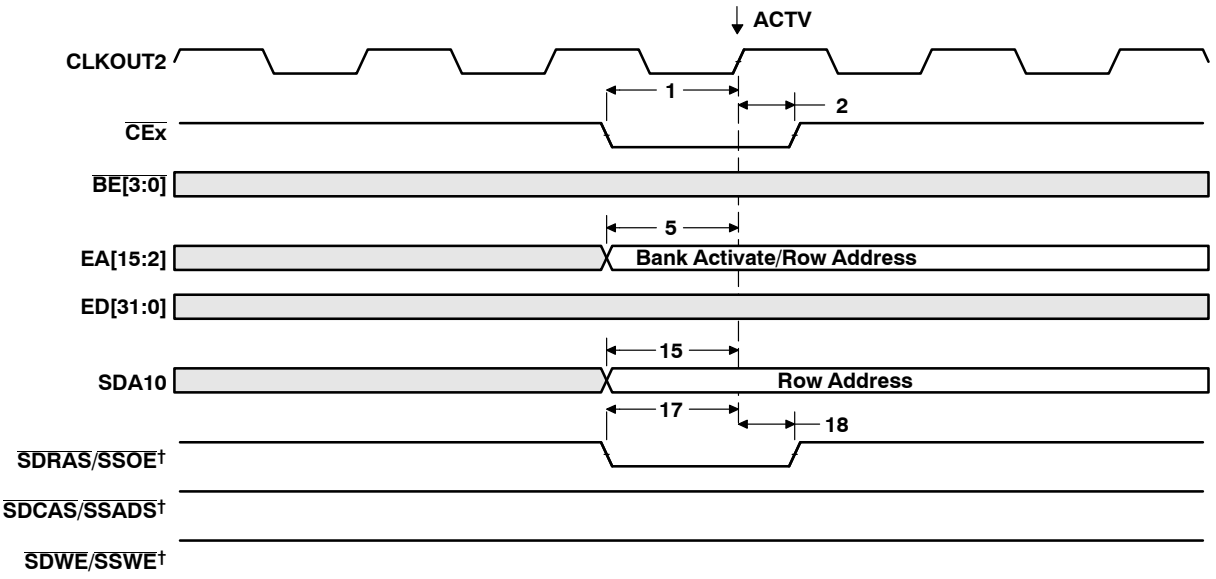

† SDCAS/SSADS, SDRAS/SSOE, and SDWE/SSWE operate as SDCAS, SDRAS, and SDWE, respectively, during SDRAM accesses.

Figure 27. SDRAM ACTV Command

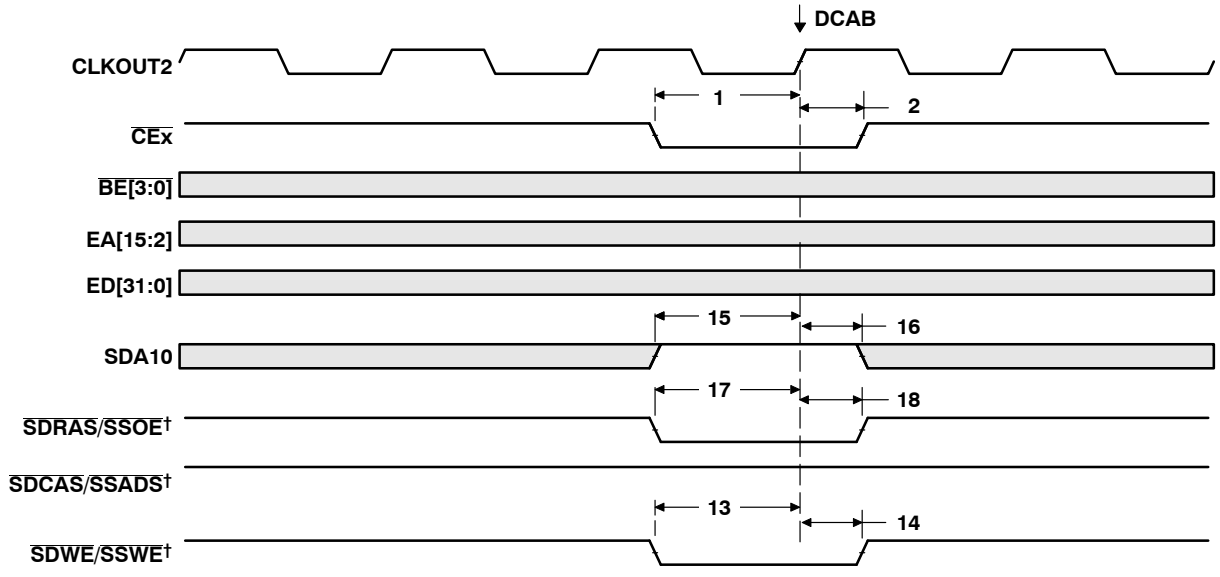

† SDCAS/SSADS, SDRAS/SSOE, and SDWE/SSWE operate as SDCAS, SDRAS, and SDWE, respectively, during SDRAM accesses.

Figure 28. SDRAM DCAB Command

SYNCHRONOUS DRAM TIMING (CONTINUED)

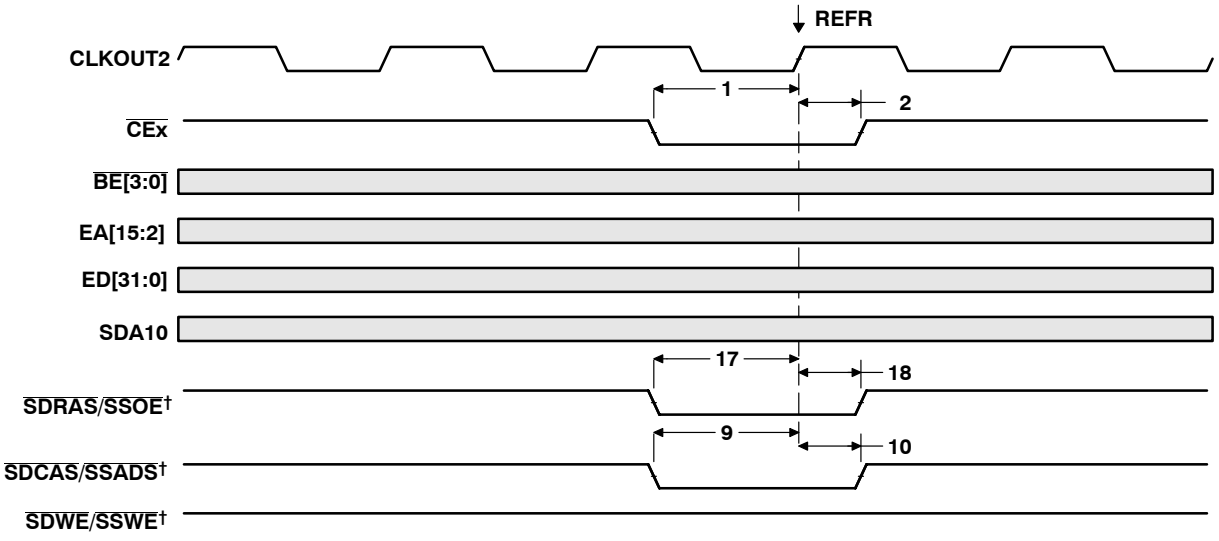

† SDCAS/SSADS, SDRAS/SSOE, and SDWE/SSWE operate as SDCAS, SDRAS, and SDWE, respectively, during SDRAM accesses.

Figure 29. SDRAM REFR Command

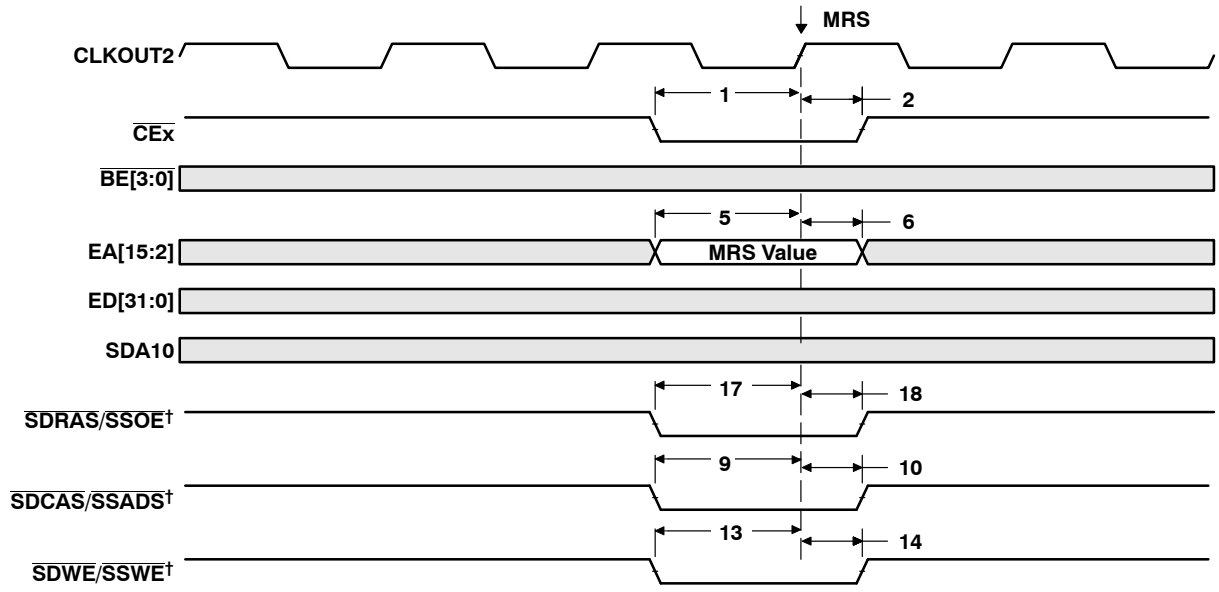

† SDCAS/SSADS, SDRAS/SSOE, and SDWE/SSWE operate as SDCAS, SDRAS, and SDWE, respectively, during SDRAM accesses.

Figure 30. SDRAM MRS Command

HOLD/HOLDA TIMING

timing requirements for the HOLD/HOLDA cycles† (see Figure 31)

NO.			-250 -300		UNIT
			MIN	MAX	
3	$t_{oh(HOLDAL-HOLDL)}$	Output hold time, HOLD low after HOLDA low	P		ns

† P = 1/CPU clock frequency in ns. For example, when running parts at 300 MHz, use P = 3.33 ns.

switching characteristics over recommended operating conditions for the HOLD/HOLDA cycles†‡ (see Figure 31)

NO.	PARAMETER		-250 -300		UNIT
			MIN	MAX	
1	$t_{d(HOLDL-EMHZ)}$	Delay time, HOLD low to EMIF Bus high impedance	3P	§	ns
2	$t_{d(EMHZ-HOLDAL)}$	Delay time, EMIF Bus high impedance to HOLDA low	0	2P	ns
4	$t_{d(HOLDH-EMLZ)}$	Delay time, HOLD high to EMIF Bus low impedance	3P	7P	ns
5	$t_{d(EMLZ-HOLDAH)}$	Delay time, EMIF Bus low impedance to HOLDA high	0	2P	ns

† P = 1/CPU clock frequency in ns. For example, when running parts at 300 MHz, use P = 3.33 ns.

‡ EMIF Bus consists of CE[3:0], BE[3:0], ED[31:0], EA[21:2], ARE, AOE, AWE, SDCAS/SSADS, SDRAS/SSOE, SDWE/SSWE, and SDA10.

§ All pending EMIF transactions are allowed to complete before HOLDA is asserted. The worst case for this is an asynchronous read or write with external ARDY used or a minimum of eight consecutive SDRAM reads or writes when RBTR8 = 1. If no bus transactions are occurring, then the minimum delay time can be achieved. Also, bus hold can be indefinitely delayed by setting NOHOLD = 1.

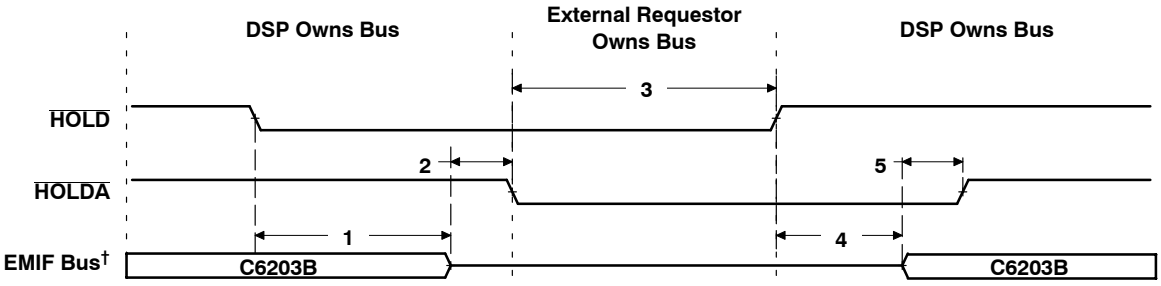

† EMIF Bus consists of CE[3:0], BE[3:0], ED[31:0], EA[21:2], ARE, AOE, AWE, SDCAS/SSADS, SDRAS/SSOE, SDWE/SSWE, and SDA10.

Figure 31. HOLD/HOLDA Timing

RESET TIMING

timing requirements for reset† (see Figure 32)

NO.			-250 -300		UNIT
			MIN	MAX	
1	$t_{w(RST)}$	Width of the RESET pulse (PLL stable)‡	10P		ns
		Width of the RESET pulse (PLL needs to sync up)§	250		µs
10	$t_{su(XD)}$	Setup time, XD configuration bits valid before RESET high¶	5P		ns
11	$t_{h(XD)}$	Hold time, XD configuration bits valid after RESET high¶	5P		ns

† P = 1/CPU clock frequency in ns. For example, when running parts at 300 MHz, use P = 3.33 ns.

‡ This parameter applies to CLKMODE x1 when CLKIN is stable, and applies to CLKMODE x4, x6, x7, x8, x9, x10, and x11 when CLKIN and PLL are stable for C6203B GLS and GNY devices. And applies to CLKMODE x4, x6, x8, and x10 when CLKIN and PLL are stable for C6203B GNZ devices.

§ This parameter applies to CLKMODE x4, x6, x7, x8, x9, x10, and x11 only (it does not apply to CLKMODE x1) for C6203B GLS and GNY devices. This parameter applies to CLKMODE x4, x6, x8, and x10 only (it does not apply to CLKMODE x1) for C6203B GNZ devices. The RESET signal is not connected internally to the clock PLL circuit. The PLL, however, may need up to 250 µs to stabilize following device power up or after PLL configuration has been changed. During that time, RESET must be asserted to ensure proper device operation. See the *Clock PLL* section for PLL lock times.

¶ XD[31:0] are the boot configuration pins during device reset.

switching characteristics over recommended operating conditions during reset†# (see Figure 32)

NO.	PARAMETER		-250 -300		UNIT
			MIN	MAX	
2	$t_{d(RSTL-CKO2IV)}$	Delay time, RESET low to CLKOUT2 invalid	P		ns
3	$t_{d(RSTH-CKO2V)}$	Delay time, RESET high to CLKOUT2 valid		4P	ns
4	$t_{d(RSTL-HIGHIV)}$	Delay time, RESET low to high group invalid	P		ns
5	$t_{d(RSTH-HIGHV)}$	Delay time, RESET high to high group valid		4P	ns
6	$t_{d(RSTL-LOWIV)}$	Delay time, RESET low to low group invalid	P		ns
7	$t_{d(RSTH-LOWV)}$	Delay time, RESET high to low group valid		4P	ns
8	$t_{d(RSTL-ZHZ)}$	Delay time, RESET low to Z group high impedance	P		ns
9	$t_{d(RSTH-ZV)}$	Delay time, RESET high to Z group valid		4P	ns

† P = 1/CPU clock frequency in ns. For example, when running parts at 300 MHz, use P = 3.33 ns.

High group consists of: XFCLK, HOLDA

Low group consists of: IACK, INUM[3:0], DMAC[3:0], PD, TOUT0, and TOUT1

Z group consists of: EA[21:2], ED[31:0], CE[3:0], BE[3:0], ARE, AWE, AOE, SDCAS/SSADS, SDRAS/SSOE, SDWE/SSWE, SDA10, CLKX0, CLKX1, CLKX2, FSX0, FSX1, FSX2, DX0, DX1, DX2, CLKR0, CLKR1, CLKR2, FSR0, FSR1, FSR2, XCE[3:0], XBE[3:0]/XA[5:2], XOE, XRE, XWE/XWAIT, XAS, XW/R, XRDY, XBLAST, XHOLD, and XHOLDA

RESET TIMING (CONTINUED)

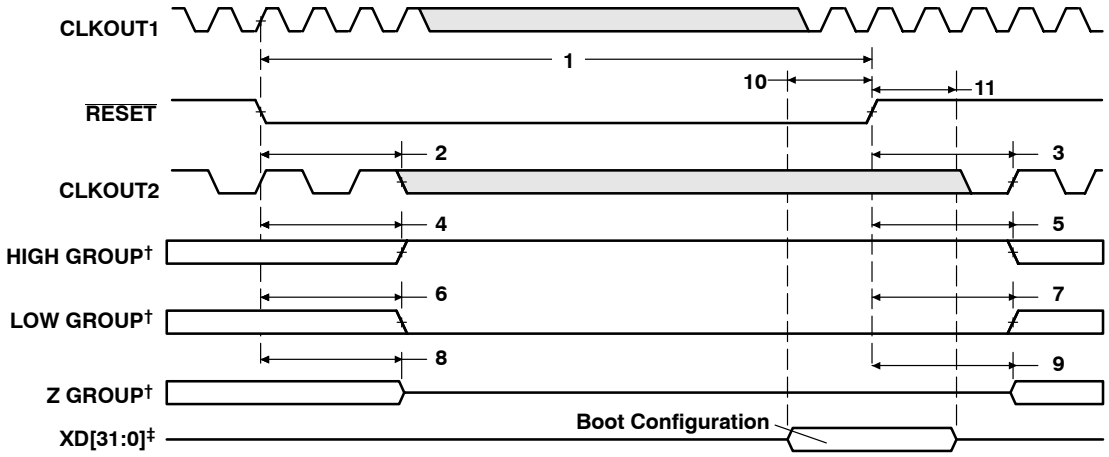

† High group consists of: XFCLK, $\overline{\text{HOLDA}}$
Low group consists of: IACK, INUM[3:0], DMAC[3:0], PD, TOUT0, and TOUT1.
Z group consists of: EA[21:2], ED[31:0], $\overline{\text{CE}}$[3:0], $\overline{\text{BE}}$[3:0], $\overline{\text{ARE}}$, $\overline{\text{AWE}}$, $\overline{\text{AOE}}$, $\overline{\text{SDCAS}}$/$\overline{\text{SSADS}}$, $\overline{\text{SDRAS}}$/$\overline{\text{SSOE}}$, $\overline{\text{SDWE}}$/$\overline{\text{SSWE}}$, SDA10, CLKX0, CLKX1, CLKX2, FSX0, FSX1, FSX2, DX0, DX1, DX2, CLKR0, CLKR1, CLKR2, FSR0, FSR1, FSR2, $\overline{\text{XCE}}$[3:0], $\overline{\text{XBE}}$[3:0]/XA[5:2], $\overline{\text{XOE}}$, $\overline{\text{XRE}}$, $\overline{\text{XWE}}$/$\overline{\text{XWAIT}}$, $\overline{\text{XAS}}$, XW/R, XRDY, XBLAST, XHOLD, and XHOLDA.

‡ XD[31:0] are the boot configuration pins during device reset.

Figure 32. Reset Timing

EXTERNAL INTERRUPT TIMING

timing requirements for interrupt response cycles† (see Figure 33)

NO.			-250 -300		UNIT
			MIN	MAX	
2	$t_{w(ILOW)}$	Width of the interrupt pulse low	2P		ns
3	$t_{w(IHIGH)}$	Width of the interrupt pulse high	2P		ns

† P = 1/CPU clock frequency in ns. For example, when running parts at 300 MHz, use P = 3.33 ns.

switching characteristics over recommended operating conditions during interrupt response cycles†‡ (see Figure 33)

NO.	PARAMETER		-250 -300		UNIT
			MIN	MAX	
1	$t_{R(EINTH-IACKH)}$	Response time, EXT_INTx high to IACK high	9P		ns
4	$t_{d(CKO2L-IACKV)}$	Delay time, CLKOUT2 low to IACK valid	−1.5	10	ns
5	$t_{d(CKO2L-INUMV)}$	Delay time, CLKOUT2 low to INUMx valid	−2.0	10	ns
6	$t_{d(CKO2L-INUMIV)}$	Delay time, CLKOUT2 low to INUMx invalid	−2.0	10	ns

† P = 1/CPU clock frequency in ns. For example, when running parts at 300 MHz, use P = 3.33 ns.
‡ When CLKOUT2 is in half (1/2) mode (see CLKOUT2 in *Signal Descriptions* table), timings are based on falling edges .

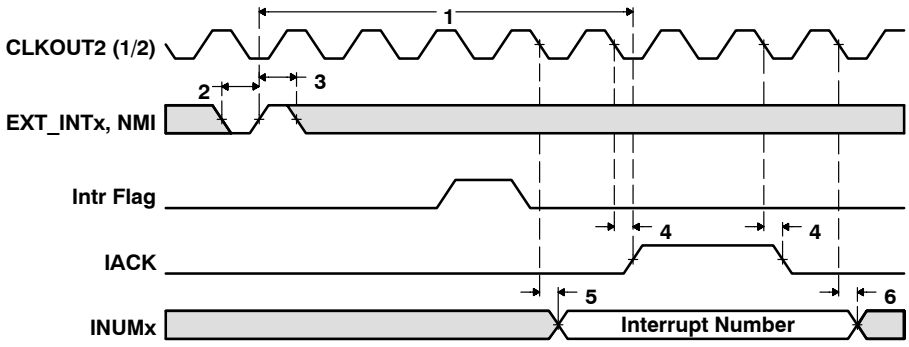

Figure 33. Interrupt Timing

EXPANSION BUS SYNCHRONOUS FIFO TIMING

timing requirements for synchronous FIFO interface (see Figure 34, Figure 35, and Figure 36)

NO.			-250 -300		UNIT
			MIN	MAX	
5	$t_{su(XDV-XFCKH)}$	Setup time, read XDx valid before XFCLK high	3		ns
6	$t_{h(XFCKH-XDV)}$	Hold time, read XDx valid after XFCLK high	2.5		ns

switching characteristics over recommended operating conditions for synchronous FIFO interface (see Figure 34, Figure 35, and Figure 36)

NO.	PARAMETER		-250 -300		UNIT
			MIN	MAX	
1	$t_{d(XFCKH-XCEV)}$	Delay time, XFCLK high to $\overline{XCEx}$ valid	1.5	5.5	ns
2	$t_{d(XFCKH-XAV)}$	Delay time, XFCLK high to $\overline{XBE[3:0]}$/XA[5:2] valid†	1.5	5.5	ns
3	$t_{d(XFCKH-XOEV)}$	Delay time, XFCLK high to $\overline{XOE}$ valid	1.5	5.5	ns
4	$t_{d(XFCKH-XREV)}$	Delay time, XFCLK high to $\overline{XRE}$ valid	1.5	5.5	ns
7	$t_{d(XFCKH-XWEV)}$	Delay time, XFCLK high to $\overline{XWE}$/$\overline{XWAIT}$‡ valid	1.5	5.5	ns
8	$t_{d(XFCKH-XDV)}$	Delay time, XFCLK high to XDx valid		6	ns
9	$t_{d(XFCKH-XDIV)}$	Delay time, XFCLK high to XDx invalid	1.5		ns

† $\overline{XBE[3:0]}$/XA[5:2] operate as address signals XA[5:2] during synchronous FIFO accesses.
‡ $\overline{XWE}$/$\overline{XWAIT}$ operates as the write-enable signal $\overline{XWE}$ during synchronous FIFO accesses.

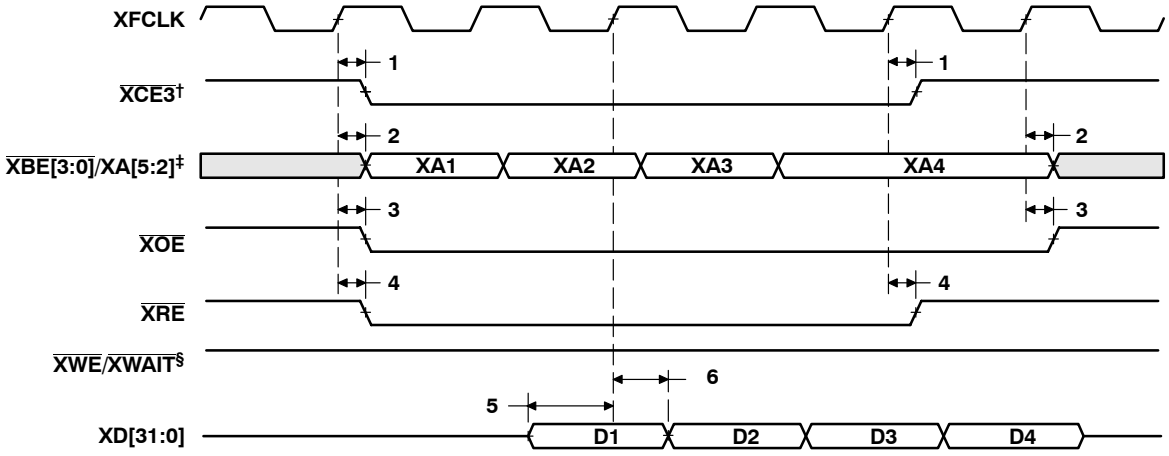

† FIFO read (glueless) mode only available in $\overline{XCE3}$.
‡ $\overline{XBE[3:0]}$/XA[5:2] operate as address signals XA[5:2] during synchronous FIFO accesses.
§ $\overline{XWE}$/$\overline{XWAIT}$ operates as the write-enable signal $\overline{XWE}$ during synchronous FIFO accesses.

Figure 34. FIFO Read Timing (Glueless Read Mode)

EXPANSION BUS SYNCHRONOUS FIFO TIMING (CONTINUED)

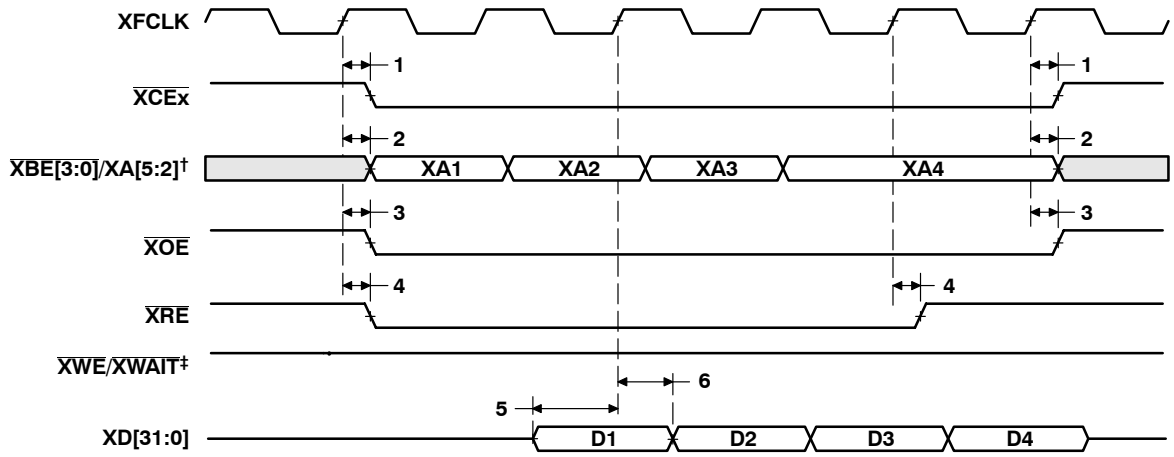

† XBE[3:0]/XA[5:2] operate as address signals XA[5:2] during synchronous FIFO accesses.
‡ XWE/XWAIT operates as the write-enable signal XWE during synchronous FIFO accesses.

Figure 35. FIFO Read Timing

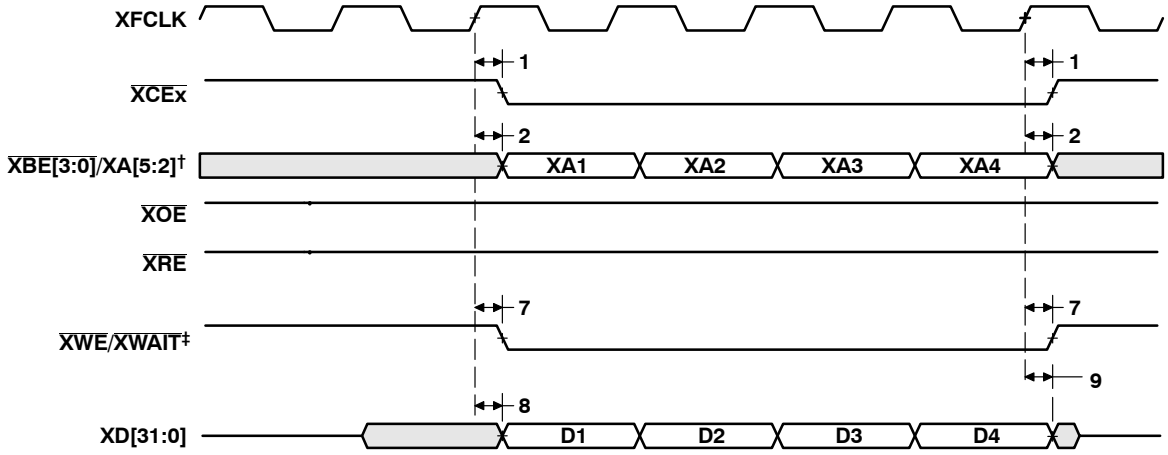

† XBE[3:0]/XA[5:2] operate as address signals XA[5:2] during synchronous FIFO accesses.
‡ XWE/XWAIT operates as the write-enable signal XWE during synchronous FIFO accesses.

Figure 36. FIFO Write Timing

EXPANSION BUS ASYNCHRONOUS PERIPHERAL TIMING

timing requirements for asynchronous peripheral cycles[†‡§¶] (see Figure 37–Figure 40)

NO.			-250 -300		UNIT
			MIN	MAX	
3	$t_{su(XDV-XREH)}$	Setup time, XDx valid before $\overline{XRE}$ high	4.5		ns
4	$t_{h(XREH-XDV)}$	Hold time, XDx valid after $\overline{XRE}$ high	2.5		ns
6	$t_{su(XRDYH-XREL)}$	Setup time, XRDY high before $\overline{XRE}$ low	–[(RST – 3) * P – 6]		ns
7	$t_{h(XREL-XRDYH)}$	Hold time, XRDY high after $\overline{XRE}$ low	(RST – 3) * P + 2		ns
9	$t_{su(XRDYL-XREL)}$	Setup time, XRDY low before $\overline{XRE}$ low	–[(RST – 3) * P – 6]		ns
10	$t_{h(XREL-XRDYL)}$	Hold time, XRDY low after $\overline{XRE}$ low	(RST – 3) * P + 2		ns
11	$t_{w(XRDYH)}$	Pulse width, XRDY high	2P		ns
15	$t_{su(XRDYH-XWEL)}$	Setup time, XRDY high before $\overline{XWE}$ low	–[(WST – 3) * P – 6]		ns
16	$t_{h(XWEL-XRDYH)}$	Hold time, XRDY high after $\overline{XWE}$ low	(WST – 3) * P + 2		ns
18	$t_{su(XRDYL-XWEL)}$	Setup time, XRDY low before $\overline{XWE}$ low	–[(WST – 3) * P – 6]		ns
19	$t_{h(XWEL-XRDYL)}$	Hold time, XRDY low after $\overline{XWE}$ low	(WST – 3) * P + 2		ns

† To ensure data setup time, simply program the strobe width wide enough. XRDY is internally synchronized. If XRDY does meet setup or hold time, it may be recognized in the current cycle or the next cycle. Therefore, XRDY can be an asynchronous input.
‡ RS = Read Setup, RST = Read Strobe, RH = Read Hold, WS = Write Setup, WST = Write Strobe, WH = Write Hold. These parameters are programmed via the XBUS XCE space control registers.
§ P = 1/CPU clock frequency in ns. For example, when running parts at 300 MHz, use P = 3.3 ns.
¶ The sum of RS and RST (or WS and WST) must be a minimum of 4 in order to use XRDY input to extend strobe width.

switching characteristics over recommended operating conditions for asynchronous peripheral cycles[‡§¶#] (see Figure 37–Figure 40)

NO.	PARAMETER		-250 -300			UNIT
			MIN	TYP	MAX	
1	$t_{osu(SELV-XREL)}$	Output setup time, select signals valid to $\overline{XRE}$ low	RS * P – 2			ns
2	$t_{oh(XREH-SELIV)}$	Output hold time, $\overline{XRE}$ low to select signals invalid	RH * P – 2			ns
5	$t_{w(XREL)}$	Pulse width, $\overline{XRE}$ low		RST * P		ns
8	$t_{d(XRDYH-XREH)}$	Delay time, XRDY high to $\overline{XRE}$ high	3P		4P + 5	ns
12	$t_{osu(SELV-XWEL)}$	Output setup time, select signals valid to $\overline{XWE}$ low	WS * P – 3			ns
13	$t_{oh(XWEH-SELIV)}$	Output hold time, $\overline{XWE}$ low to select signals invalid	WH * P – 2			ns
14	$t_{w(XWEL)}$	Pulse width, $\overline{XWE}$ low		WST * P		ns
17	$t_{d(XRDYH-XWEH)}$	Delay time, XRDY high to $\overline{XWE}$ high	3P		4P + 5	ns

‡ RS = Read Setup, RST = Read Strobe, RH = Read Hold, WS = Write Setup, WST = Write Strobe, WH = Write Hold. These parameters are programmed via the XBUS XCE space control registers.
§ P = 1/CPU clock frequency in ns. For example, when running parts at 300 MHz, use P = 3.3 ns.
¶ The sum of RS and RST (or WS and WST) must be a minimum of 4 in order to use XRDY input to extend strobe width.
# Select signals include: $\overline{XCEx}$, $\overline{XBE[3:0]}$/XA[5:2], $\overline{XOE}$; and for writes, include XD[31:0], with the exception that $\overline{XCEx}$ can stay active for an additional 7P ns following the end of the cycle.

EXPANSION BUS ASYNCHRONOUS PERIPHERAL TIMING (CONTINUED)

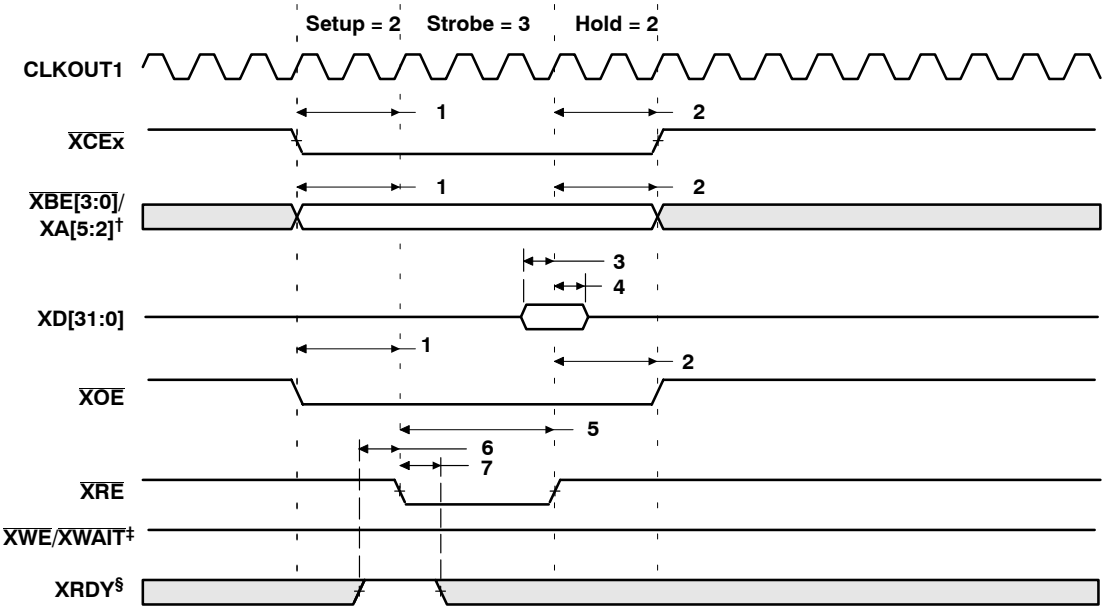

† XBE[3:0]/XA[5:2] operate as address signals XA[5:2] during expansion bus asynchronous peripheral accesses.
‡ XWE/XWAIT operates as the write-enable signal XWE during expansion bus asynchronous peripheral accesses.
§ XRDY operates as active-high ready input during expansion bus asynchronous peripheral accesses.

Figure 37. Expansion Bus Asynchronous Peripheral Read Timing (XRDY Not Used)

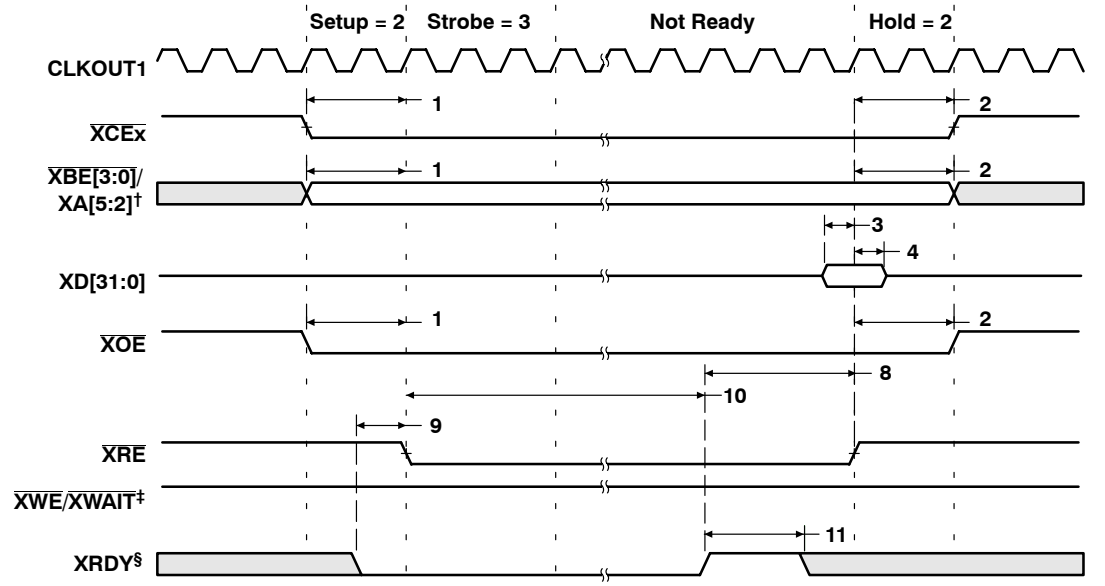

† XBE[3:0]/XA[5:2] operate as address signals XA[5:2] during expansion bus asynchronous peripheral accesses.
‡ XWE/XWAIT operates as the write-enable signal XWE during expansion bus asynchronous peripheral accesses.
§ XRDY operates as active-high ready input during expansion bus asynchronous peripheral accesses.

Figure 38. Expansion Bus Asynchronous Peripheral Read Timing (XRDY Used)

EXPANSION BUS ASYNCHRONOUS PERIPHERAL TIMING (CONTINUED)

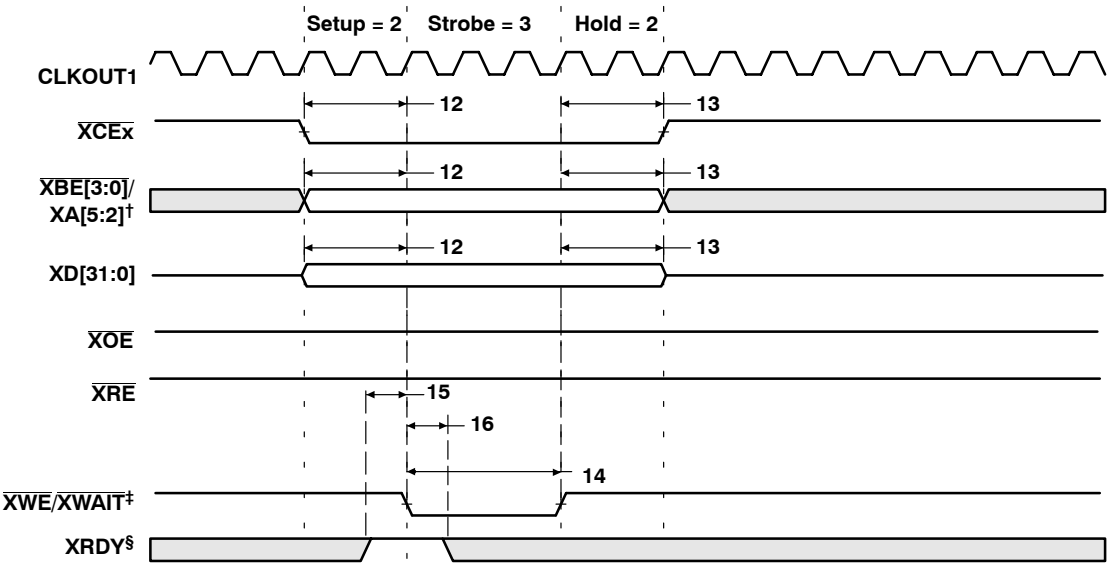

† XBE[3:0]/XA[5:2] operate as address signals XA[5:2] during expansion bus asynchronous peripheral accesses.
‡ XWE/XWAIT operates as the write-enable signal XWE during expansion bus asynchronous peripheral accesses.
§ XRDY operates as active-high ready input during expansion bus asynchronous peripheral accesses.

Figure 39. Expansion Bus Asynchronous Peripheral Write Timing (XRDY Not Used)

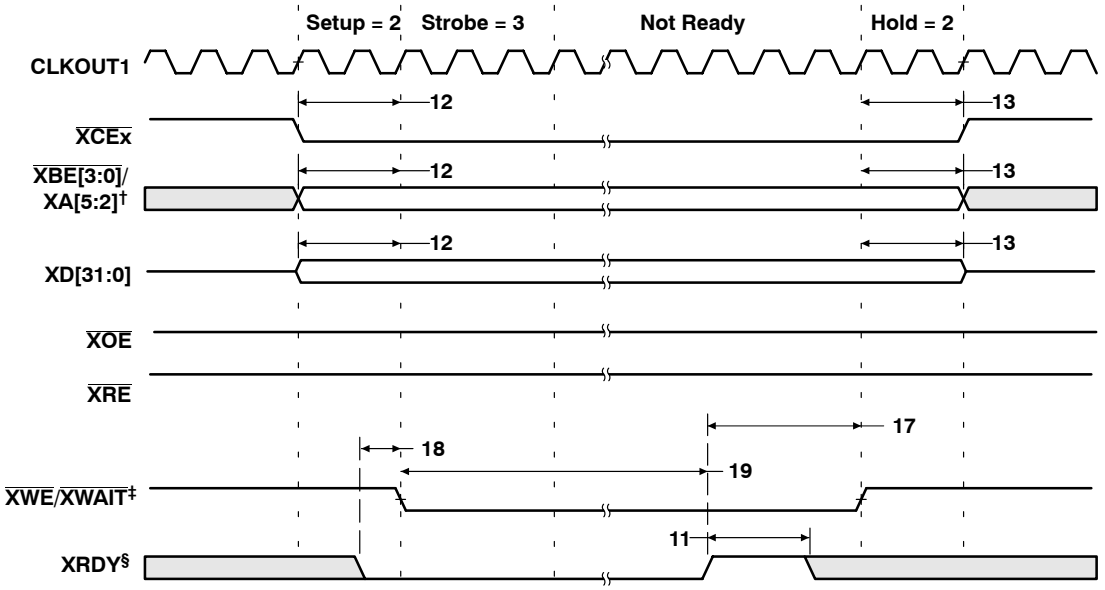

† XBE[3:0]/XA[5:2] operate as address signals XA[5:2] during expansion bus asynchronous peripheral accesses.
‡ XWE/XWAIT operates as the write-enable signal XWE during expansion bus asynchronous peripheral accesses.
§ XRDY operates as active-high ready input during expansion bus asynchronous peripheral accesses.

Figure 40. Expansion Bus Asynchronous Peripheral Write Timing (XRDY Used)

EXPANSION BUS SYNCHRONOUS HOST-PORT TIMING

timing requirements with external device as bus master (see Figure 41 and Figure 42)

NO.			REV. 2 -250 -300		REV. 3 -250 -300		UNIT
			MIN	MAX	MIN	MAX	
1	$t_{su(XCSV-XCKIH)}$	Setup time, $\overline{XCS}$ valid before XCLKIN high	3.5		3.5		ns
2	$t_{h(XCKIH-XCS)}$	Hold time, $\overline{XCS}$ valid after XCLKIN high	2.8		2.8		ns
3	$t_{su(XAS-XCKIH)}$	Setup time, $\overline{XAS}$ valid before XCLKIN high	3.5		3.5		ns
4	$t_{h(XCKIH-XAS)}$	Hold time, $\overline{XAS}$ valid after XCLKIN high	2.8		2.8		ns
5	$t_{su(XCTL-XCKIH)}$	Setup time, XCNTL valid before XCLKIN high	3.5		3.5		ns
6	$t_{h(XCKIH-XCTL)}$	Hold time, XCNTL valid after XCLKIN high	2.8		2.8		ns
7	$t_{su(XWR-XCKIH)}$	Setup time, XW/R valid before XCLKIN high†	3.5		3.5		ns
8	$t_{h(XCKIH-XWR)}$	Hold time, XW/R valid after XCLKIN high†	2.8		2.8		ns
9	$t_{su(XBLTV-XCKIH)}$	Setup time, XBLAST valid before XCLKIN high‡	3.5		3.5		ns
10	$t_{h(XCKIH-XBLTV)}$	Hold time, XBLAST valid after XCLKIN high‡	2.8		2.8		ns
16	$t_{su(XBEV-XCKIH)}$	Setup time, $\overline{XBE[3:0]}$/XA[5:2] valid before XCLKIN high§	3.5		3.5		ns
17	$t_{h(XCKIH-XBEV)}$	Hold time, $\overline{XBE[3:0]}$/XA[5:2] valid after XCLKIN high§	2.8		2.8		ns
18	$t_{su(XD-XCKIH)}$	Setup time, XDx valid before XCLKIN high	3.5		3.5		ns
19	$t_{h(XCKIH-XD)}$	Hold time, XDx valid after XCLKIN high	2.8		2.8		ns

† XW/R input/output polarity selected at boot.
‡ XBLAST input polarity selected at boot
§ $\overline{XBE[3:0]}$/XA[5:2] operate as byte-enables $\overline{XBE[3:0]}$ during host-port accesses.

switching characteristics over recommended operating conditions with external device as bus master¶ (see Figure 41 and Figure 42)

NO.	PARAMETER		REV. 2 -250 -300		REV. 3 -250 -300		UNIT
			MIN	MAX	MIN	MAX	
11	$t_{d(XCKIH-XDLZ)}$	Delay time, XCLKIN high to XDx low impedance	0		0		ns
12	$t_{d(XCKIH-XDV)}$	Delay time, XCLKIN high to XDx valid		16.5		4P – 0.5	ns
13	$t_{d(XCKIH-XDIV)}$	Delay time, XCLKIN high to XDx invalid	5		3		ns
14	$t_{d(XCKIH-XDHZ)}$	Delay time, XCLKIN high to XDx high impedance		4P		4P	ns
15	$t_{d(XCKIH-XRY)}$	Delay time, XCLKIN high to XRDY invalid#	5	16.5	3	4P – 0.5	ns
20	$t_{d(XCKIH-XRYLZ)}$	Delay time, XCLKIN high to XRDY low impedance	5	16.5	3	4P – 0.5	ns
21	$t_{d(XCKIH-XRYHZ)}$	Delay time, XCLKIN high to XRDY high impedance#	2P + 5	3P + 16.5	2P + 3	7P – 0.5	ns

¶ P = 1/CPU clock frequency in ns. For example, when running parts at 300 MHz, use P = 3.3 ns.
# XRDY operates as active-low ready input/output during host-port accesses.

EXPANSION BUS SYNCHRONOUS HOST-PORT TIMING (CONTINUED)

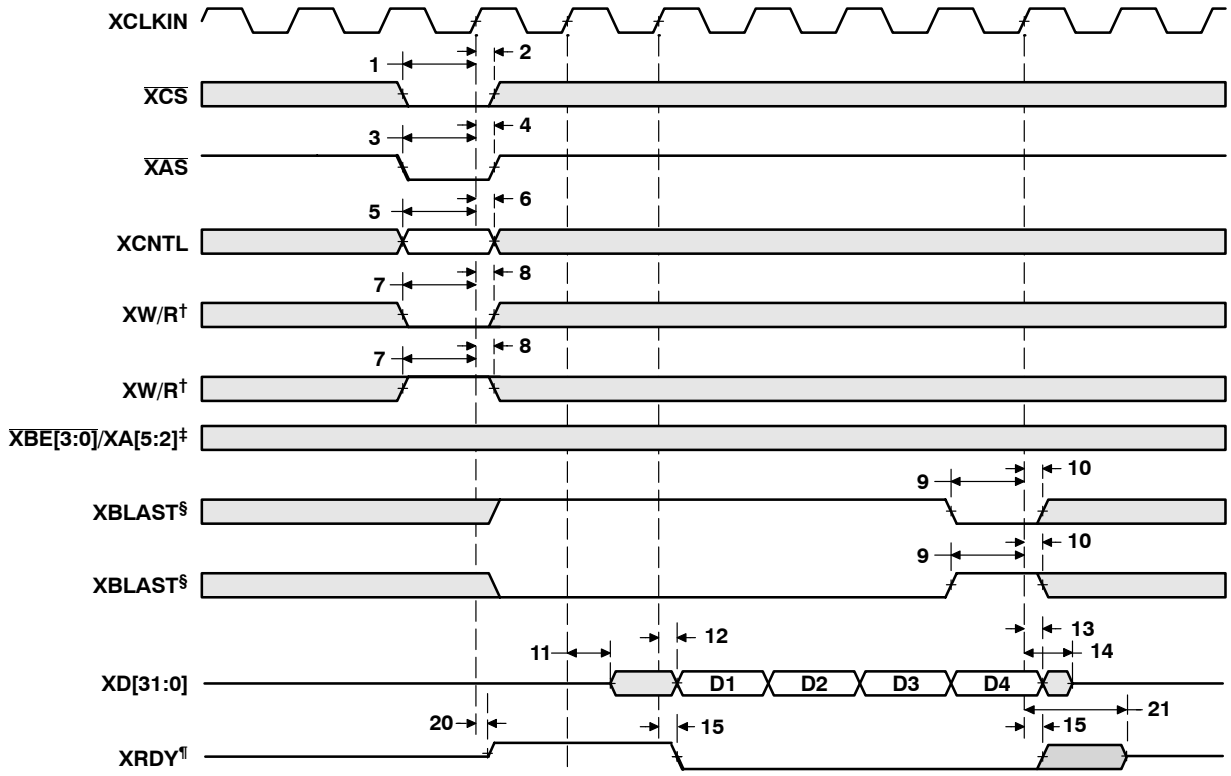

† XW/R input/output polarity selected at boot
‡ $\overline{\text{XBE[3:0]}}$/XA[5:2] operate as byte-enables $\overline{\text{XBE[3:0]}}$ during host-port accesses.
§ XBLAST input polarity selected at boot
¶ XRDY operates as active-low ready input/output during host-port accesses.

Figure 41. External Host as Bus Master—Read

EXPANSION BUS SYNCHRONOUS HOST-PORT TIMING (CONTINUED)

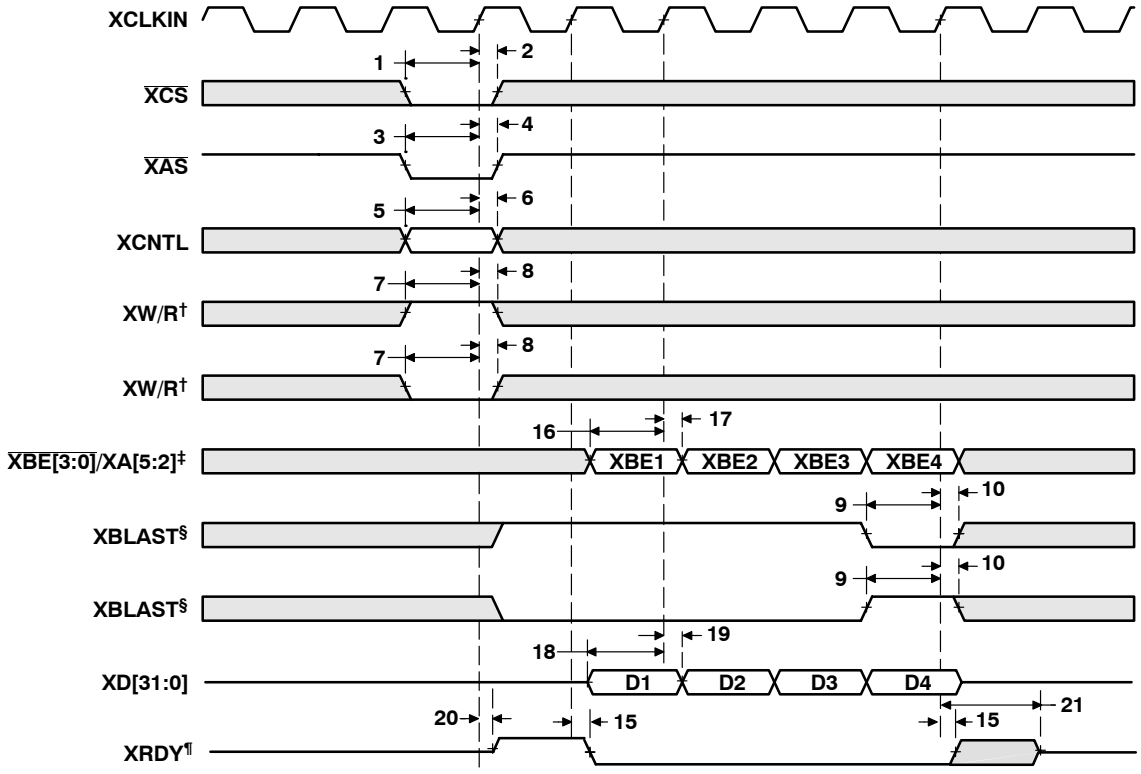

† XW/R input/output polarity selected at boot
‡ $\overline{\text{XBE}}$[3:0]/XA[5:2] operate as byte-enables $\overline{\text{XBE}}$[3:0] during host-port accesses.
§ XBLAST input polarity selected at boot
¶ XRDY operates as active-low ready input/output during host-port accesses.

Figure 42. External Host as Bus Master—Write

EXPANSION BUS SYNCHRONOUS HOST-PORT TIMING (CONTINUED)

timing requirements with C62x™ as bus master (see Figure 43, Figure 44, and Figure 45)

NO.			REV. 2 -250 -300		REV. 3 -250 -300		UNIT
			MIN	MAX	MIN	MAX	
9	$t_{su(XDV-XCKIH)}$	Setup time, XDx valid before XCLKIN high	3.5		3.5		ns
10	$t_{h(XCKIH-XDV)}$	Hold time, XDx valid after XCLKIN high	2.8		2.8		ns
11	$t_{su(XRY-XCKIH)}$	Setup time, XRDY valid before XCLKIN high†	3.5		3.5		ns
12	$t_{h(XCKIH-XRY)}$	Hold time, XRDY valid after XCLKIN high†	2.8		2.8		ns
14	$t_{su(XBFF-XCKIH)}$	Setup time, XBOFF valid before XCLKIN high	3.5		3.5		ns
15	$t_{h(XCKIH-XBFF)}$	Hold time, XBOFF valid after XCLKIN high	2.8		2.8		ns

† XRDY operates as active-low ready input/output during host-port accesses.

switching characteristics over recommended operating conditions with C62x™ as bus master‡ (see Figure 43, Figure 44, and Figure 45)

NO.	PARAMETER		REV. 2 -250 -300		REV. 3 -250 -300		UNIT
			MIN	MAX	MIN	MAX	
1	$t_{d(XCKIH-XASV)}$	Delay time, XCLKIN high to $\overline{XAS}$ valid	5	16.5	3	4P – 0.5	ns
2	$t_{d(XCKIH-XWRV)}$	Delay time, XCLKIN high to XW/R valid§	5	16.5	3	4P – 0.5	ns
3	$t_{d(XCKIH-XBLTV)}$	Delay time, XCLKIN high to XBLAST valid¶	5	16.5	3	4P – 0.5	ns
4	$t_{d(XCKIH-XBEV)}$	Delay time, XCLKIN high to $\overline{XBE}[3:0]$/XA[5:2] valid#	5	16.5	3	4P – 0.5	ns
5	$t_{d(XCKIH-XDLZ)}$	Delay time, XCLKIN high to XDx low impedance	0		0		ns
6	$t_{d(XCKIH-XDV)}$	Delay time, XCLKIN high to XDx valid		16.5		4P – 0.5	ns
7	$t_{d(XCKIH-XDIV)}$	Delay time, XCLKIN high to XDx invalid	5		3		ns
8	$t_{d(XCKIH-XDHZ)}$	Delay time, XCLKIN high to XDx high impedance		4P		4P	ns
13	$t_{d(XCKIH-XWTV)}$	Delay time, XCLKIN high to $\overline{XWE}$/$\overline{XWAIT}$ valid‖	5	16.5	3	4P – 0.5	ns

‡ P = 1/CPU clock frequency in ns. For example, when running parts at 300 MHz, use P = 3.3 ns.
§ XW/R input/output polarity selected at boot.
¶ XBLAST output polarity is always active low.
# $\overline{XBE}[3:0]$/XA[5:2] operate as byte-enables $\overline{XBE}[3:0]$ during host-port accesses.
‖ $\overline{XWE}$/$\overline{XWAIT}$ operates as $\overline{XWAIT}$ output signal during host-port accesses.

EXPANSION BUS SYNCHRONOUS HOST-PORT TIMING (CONTINUED)

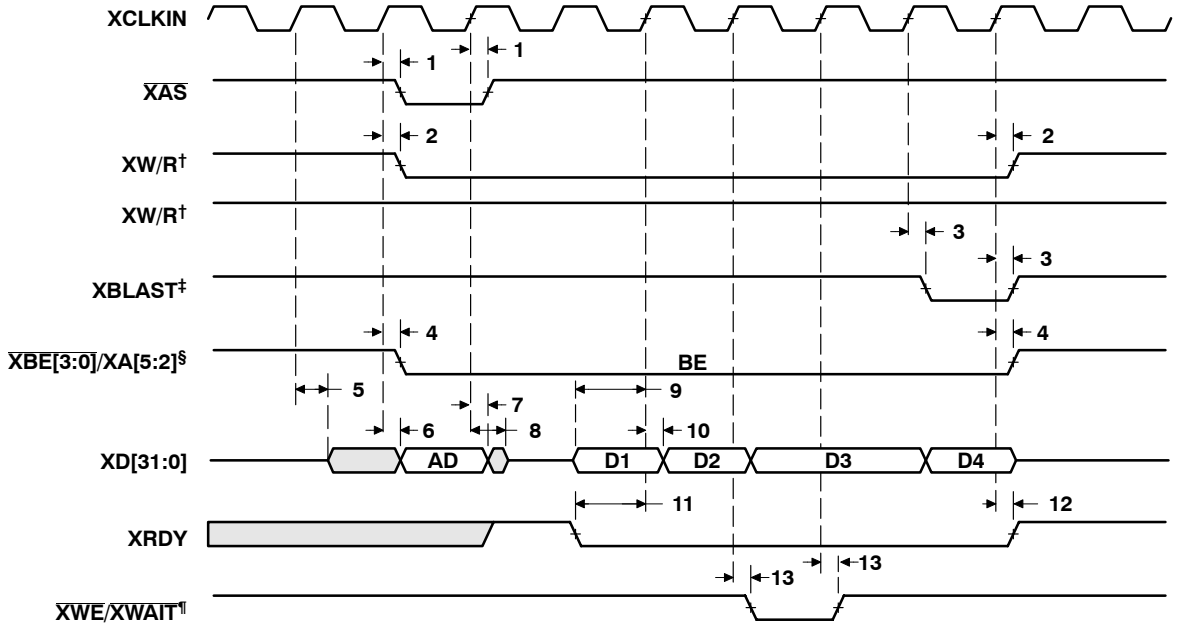

† XW/R input/output polarity selected at boot
‡ XBLAST output polarity is always active low.
§ $\overline{\text{XBE}}$[3:0]/XA[5:2] operate as byte-enables $\overline{\text{XBE}}$[3:0] during host-port accesses.
¶ $\overline{\text{XWE}}$/$\overline{\text{XWAIT}}$ operates as $\overline{\text{XWAIT}}$ output signal during host-port accesses.

Figure 43. C62x as Bus Master—Read

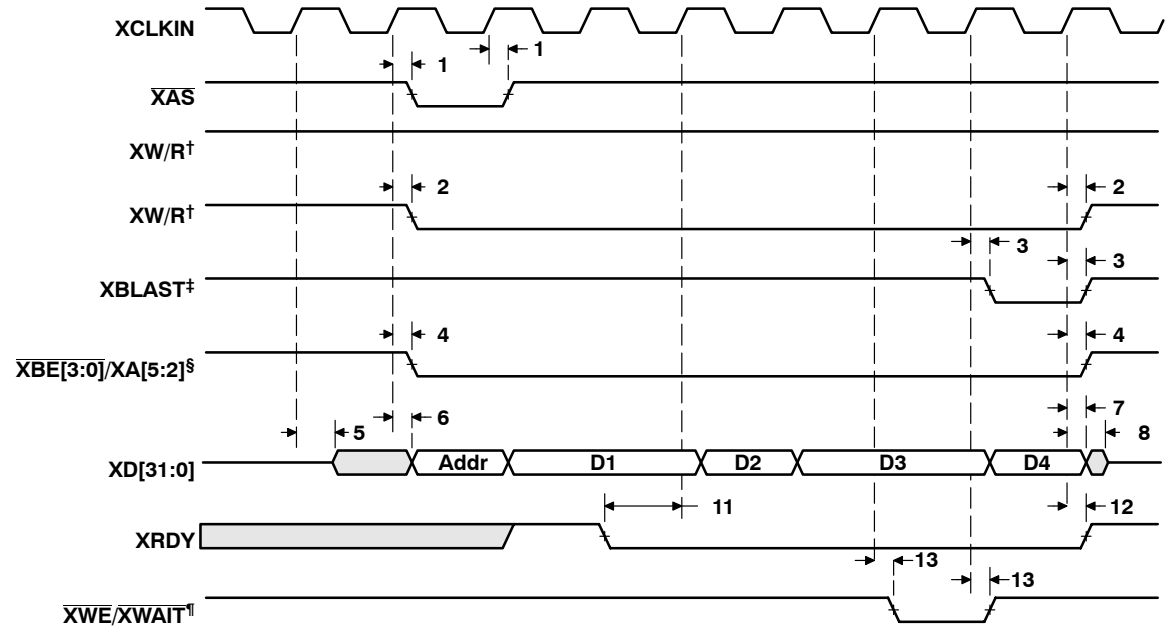

† XW/R input/output polarity selected at boot
‡ XBLAST output polarity is always active low.
§ $\overline{\text{XBE}}$[3:0]/XA[5:2] operate as byte-enables $\overline{\text{XBE}}$[3:0] during host-port accesses.
¶ $\overline{\text{XWE}}$/$\overline{\text{XWAIT}}$ operates as $\overline{\text{XWAIT}}$ output signal during host-port accesses.

Figure 44. C62x as Bus Master—Write

EXPANSION BUS SYNCHRONOUS HOST-PORT TIMING (CONTINUED)

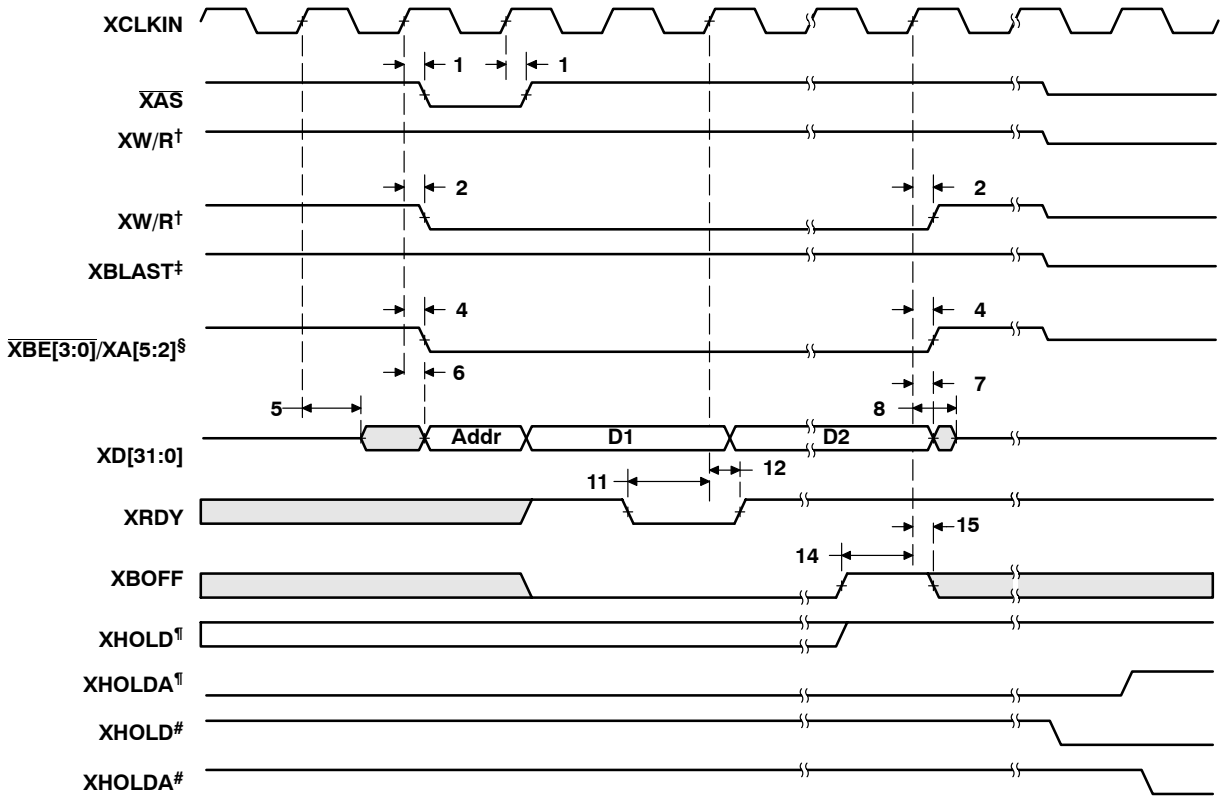

† XW/R input/output polarity selected at boot
‡ XBLAST output polarity is always active low.
§ XBE[3:0]/XA[5:2] operate as byte-enables XBE[3:0] during host-port accesses.
¶ Internal arbiter enabled
# Internal arbiter disabled
‖ This diagram illustrates XBOFF timing. Bus arbitration timing is shown in Figure 48 and Figure 49.

Figure 45. C62x as Bus Master—XBOFF Operation‖

EXPANSION BUS ASYNCHRONOUS HOST-PORT TIMING

timing requirements with external device as asynchronous bus master† (see Figure 46 and Figure 47)

NO.			-250 -300		UNIT
			MIN	MAX	
1	$t_{w(XCSL)}$	Pulse duration, $\overline{XCS}$ low	4P		ns
2	$t_{w(XCSH)}$	Pulse duration, $\overline{XCS}$ high	4P		ns
3	$t_{su(XSEL-XCSL)}$	Setup time, expansion bus select signals‡ valid before $\overline{XCS}$ low	1		ns
4	$t_{h(XCSL-XSEL)}$	Hold time, expansion bus select signals‡ valid after $\overline{XCS}$ low	3.4		ns
10	$t_{h(XRYL-XCSL)}$	Hold time, $\overline{XCS}$ low after XRDY low	P + 1.5		ns
11	$t_{su(XBEV-XCSH)}$	Setup time, $\overline{XBE[3:0]}$/XA[5:2] valid before $\overline{XCS}$ high§	1		ns
12	$t_{h(XCSH-XBEV)}$	Hold time, $\overline{XBE[3:0]}$/XA[5:2] valid after $\overline{XCS}$ high§	3		ns
13	$t_{su(XDV-XCSH)}$	Setup time, XDx valid before $\overline{XCS}$ high	1		ns
14	$t_{h(XCSH-XDV)}$	Hold time, XDx valid after $\overline{XCS}$ high	3		ns

† P = 1/CPU clock frequency in ns. For example, when running parts at 300 MHz, use P = 3.3 ns.
‡ Expansion bus select signals include XCNTL and XR/W.
§ $\overline{XBE[3:0]}$/XA[5:2] operate as byte-enables $\overline{XBE[3:0]}$ during host-port accesses.

switching characteristics over recommended operating conditions with external device as asynchronous bus master† (see Figure 46 and Figure 47)

NO.	PARAMETER		-250 -300		UNIT
			MIN	MAX	
5	$t_{d(XCSL-XDLZ)}$	Delay time, $\overline{XCS}$ low to XDx low impedance	0		ns
6	$t_{d(XCSH-XDIV)}$	Delay time, $\overline{XCS}$ high to XDx invalid	0	12	ns
7	$t_{d(XCSH-XDHZ)}$	Delay time, $\overline{XCS}$ high to XDx high impedance		4P	ns
8	$t_{d(XRYL-XDV)}$	Delay time, XRDY low to XDx valid	–4	1.8	ns
9	$t_{d(XCSH-XRYH)}$	Delay time, $\overline{XCS}$ high to XRDY high	–1	12	ns

† P = 1/CPU clock frequency in ns. For example, when running parts at 300 MHz, use P = 3.3 ns.

EXPANSION BUS ASYNCHRONOUS HOST-PORT TIMING (CONTINUED)

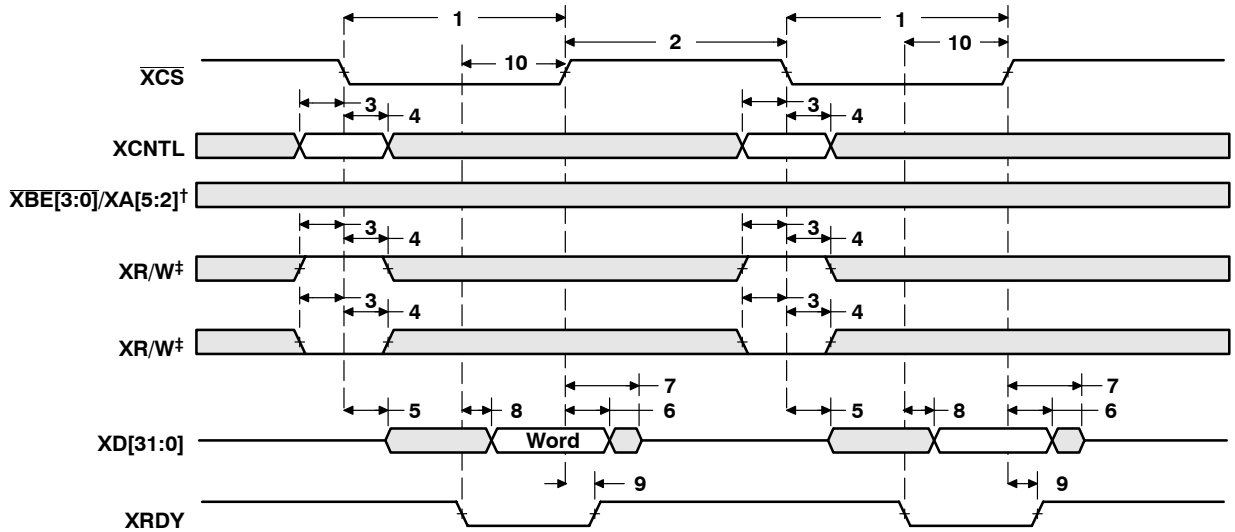

† $\overline{\text{XBE}[3:0]}$/XA[5:2] operate as byte-enables $\overline{\text{XBE}[3:0]}$ during host-port accesses.
‡ XW/R input/output polarity selected at boot

Figure 46. External Device as Asynchronous Master—Read

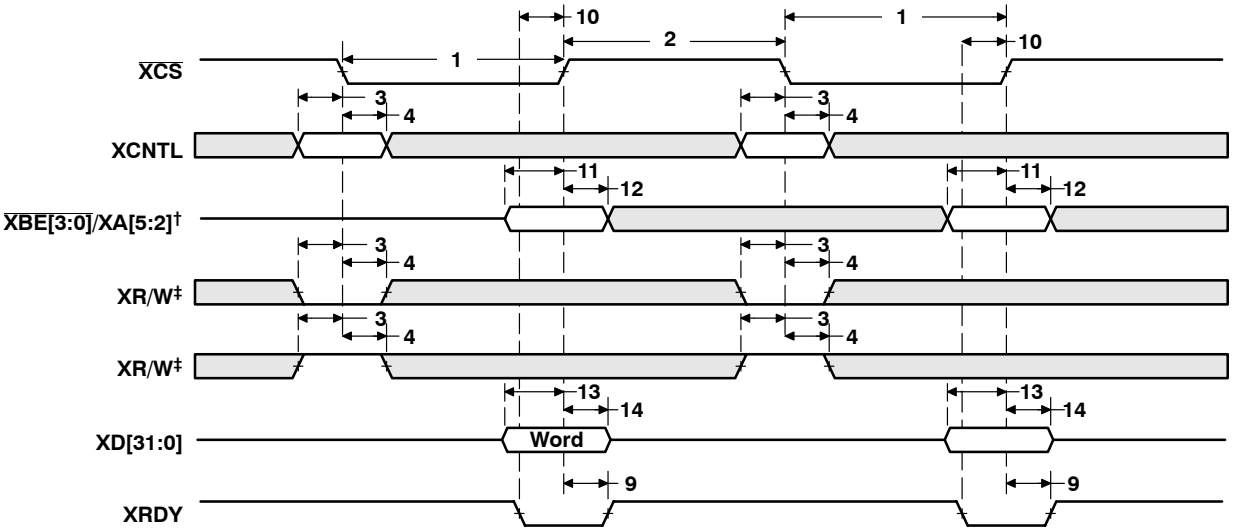

† $\overline{\text{XBE}[3:0]}$/XA[5:2] operate as byte-enables $\overline{\text{XBE}[3:0]}$ during host-port accesses.
‡ XW/R input/output polarity selected at boot

Figure 47. External Device as Asynchronous Master—Write

XHOLD/XHOLDA TIMING

timing requirements for expansion bus arbitration (internal arbiter enabled)† (see Figure 48)

NO.			-250 -300		UNIT
			MIN	MAX	
3	$t_{oh(XHDAH-XHDH)}$	Output hold time, XHOLD high after XHOLDA high	P		ns

† P = 1/CPU clock frequency in ns. For example, when running parts at 300 MHz, use P = 3.3 ns.

switching characteristics over recommended operating conditions for expansion bus arbitration (internal arbiter enabled)†‡ (see Figure 48)

NO.	PARAMETER		-250 -300		UNIT
			MIN	MAX	
1	$t_{d(XHDH-XBHZ)}$	Delay time, XHOLD high to XBus high impedance	3P	§	ns
2	$t_{d(XBHZ-XHDAH)}$	Delay time, XBus high impedance to XHOLDA high	0	2P	ns
4	$t_{d(XHDL-XHDAL)}$	Delay time, XHOLD low to XHOLDA low	3P		ns
5	$t_{d(XHDAL-XBLZ)}$	Delay time, XHOLDA low to XBus low impedance	0	2P	ns

† P = 1/CPU clock frequency in ns. For example, when running parts at 300 MHz, use P = 3.3 ns.
‡ XBus consists of $\overline{XBE[3:0]}$/XA[5:2], $\overline{XAS}$, XW/R, and XBLAST.
§ All pending XBus transactions are allowed to complete before XHOLDA is asserted.

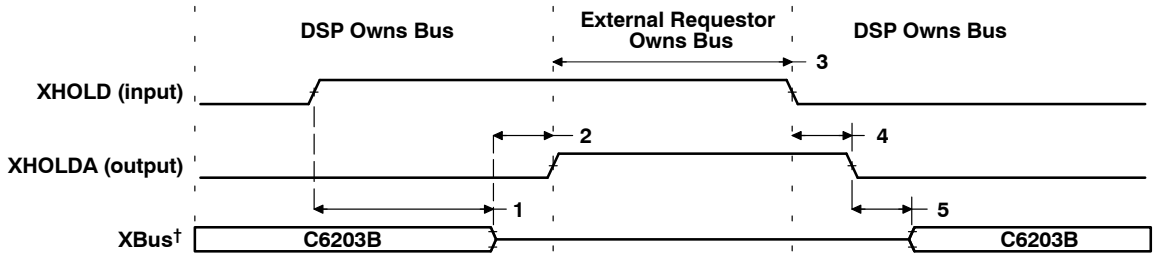

† XBus consists of $\overline{XBE[3:0]}$/XA[5:2], $\overline{XAS}$, XW/R, and XBLAST.

Figure 48. Expansion Bus Arbitration—Internal Arbiter Enabled

XHOLD/XHOLDA TIMING (CONTINUED)

switching characteristics over recommended operating conditions for expansion bus arbitration (internal arbiter disabled)† (see Figure 49)

NO.	PARAMETER		-250 -300		UNIT
			MIN	MAX	
1	$t_{d(XHDAH-XBLZ)}$	Delay time, XHOLDA high to XBus low impedance‡	2P	2P + 10	ns
2	$t_{d(XBHZ-XHDL)}$	Delay time, XBus high impedance to XHOLD low‡	0	2P	ns

† P = 1/CPU clock frequency in ns. For example, when running parts at 300 MHz, use P = 3.3 ns.
‡ XBus consists of $\overline{XBE[3:0]}$/XA[5:2], $\overline{XAS}$, XW/R, and XBLAST.

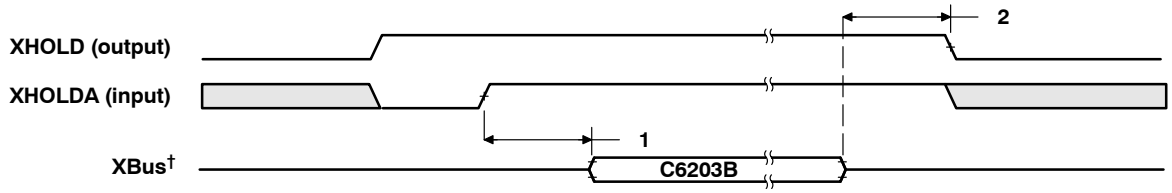

† XBus consists of $\overline{XBE[3:0]}$/XA[5:2], $\overline{XAS}$, XW/R, and XBLAST.

Figure 49. Expansion Bus Arbitration—Internal Arbiter Disabled

MULTICHANNEL BUFFERED SERIAL PORT TIMING

timing requirements for McBSP†‡ (see Figure 50)

NO.				-250 -300		UNIT
				MIN	MAX	
2	$t_{c(CKRX)}$	Cycle time, CLKR/X	CLKR/X ext	2P§		ns
3	$t_{w(CKRX)}$	Pulse duration, CLKR/X high or CLKR/X low	CLKR/X ext	P – 1¶		ns
5	$t_{su(FRH-CKRL)}$	Setup time, external FSR high before CLKR low	CLKR int	9		ns
			CLKR ext	2		
6	$t_{h(CKRL-FRH)}$	Hold time, external FSR high after CLKR low	CLKR int	6		ns
			CLKR ext	3		
7	$t_{su(DRV-CKRL)}$	Setup time, DR valid before CLKR low	CLKR int	8		ns
			CLKR ext	0.5		
8	$t_{h(CKRL-DRV)}$	Hold time, DR valid after CLKR low	CLKR int	3		ns
			CLKR ext	4.5		
10	$t_{su(FXH-CKXL)}$	Setup time, external FSX high before CLKX low	CLKX int	9		ns
			CLKX ext	2		
11	$t_{h(CKXL-FXH)}$	Hold time, external FSX high after CLKX low	CLKX int	6		ns
			CLKX ext	4		

† CLKRP = CLKXP = FSRP = FSXP = 0. If the polarity of any of the signals is inverted, then the timing references of that signal are also inverted.

‡ P = 1/CPU clock frequency in ns. For example, when running parts at 300 MHz, use P = 3.3 ns.

§ The maximum bit rate for the C6203B device is 100 Mbps or CPU/2 (the slower of the two). Care must be taken to ensure that the AC timings specified in this data sheet are met. The maximum bit rate for McBSP-to-McBSP communications is 100 MHz; therefore, the minimum CLKR/X clock cycle is either twice the CPU cycle time (2P), or 10 ns (100 MHz), whichever value is larger. For example, when running parts at 300 MHz (P = 3.3 ns), use 10 ns as the minimum CLKR/X clock cycle (by setting the appropriate CLKGDV ratio or external clock source). When running parts at 100 MHz (P = 10 ns), use 2P = 20 ns (50 MHz) as the minimum CLKR/X clock cycle. The maximum bit rate for McBSP-to-McBSP communications applies when the serial port is a master of the clock and frame syncs (with CLKR connected to CLKX, FSR connected to FSX, CLKXM = FSXM = 1, and CLKRM = FSRM = 0) in data delay 1 or 2 mode (R/XDATDLY = 01b or 10b) and the other device the McBSP communicates to is a slave.

¶ The minimum CLKR/X pulse duration is either (P – 1) or 4 ns, whichever is larger. For example, when running parts at 300 MHz (P = 3.3 ns), use 4 ns as the minimum CLKR/X pulse duration. When running parts at 100 MHz (P = 10 ns), use (P – 1) = 9 ns as the minimum CLKR/X pulse duration.

MULTICHANNEL BUFFERED SERIAL PORT TIMING (CONTINUED)

switching characteristics over recommended operating conditions for McBSP†‡ (see Figure 50)

NO.	PARAMETER			-250 -300		UNIT
				MIN	MAX	
1	$t_{d(CKSH-CKRXH)}$	Delay time, CLKS high to CLKR/X high for internal CLKR/X generated from CLKS input		4	16	ns
2	$t_{c(CKRX)}$	Cycle time, CLKR/X	CLKR/X int	2P§¶		ns
3	$t_{w(CKRX)}$	Pulse duration, CLKR/X high or CLKR/X low	CLKR/X int	C – 1#	C + 1#	ns
4	$t_{d(CKRH-FRV)}$	Delay time, CLKR high to internal FSR valid	CLKR int	–2	3	ns
9	$t_{d(CKXH-FXV)}$	Delay time, CLKX high to internal FSX valid	CLKX int	–2	3	ns
			CLKX ext	2	9	
12	$t_{dis(CKXH-DXHZ)}$	Disable time, DX high impedance following last data bit from CLKX high	CLKX int	–1	5	ns
			CLKX ext	2	9	
13	$t_{d(CKXH-DXV)}$	Delay time, CLKX high to DX valid	CLKX int	–0.5	4	ns
			CLKX ext	2	11	
14	$t_{d(FXH-DXV)}$	Delay time, FSX high to DX valid ONLY applies when in data delay 0 (XDATDLY = 00b) mode.	FSX int	–1	5	ns
			FSX ext	0	10	

† CLKRP = CLKXP = FSRP = FSXP = 0. If the polarity of any of the signals is inverted, then the timing references of that signal are also inverted.

‡ Minimum delay times also represent minimum output hold times.

§ P = 1/CPU clock frequency in ns. For example, when running parts at 300 MHz, use P = 3.3 ns.

¶ The maximum bit rate for the C6203B device is 100 Mbps or CPU/2 (the slower of the two). Care must be taken to ensure that the AC timings specified in this data sheet are met. The maximum bit rate for McBSP-to-McBSP communications is 100 MHz; therefore, the minimum CLKR/X clock cycle is either twice the CPU cycle time (2P), or 10 ns (100 MHz), whichever value is larger. For example, when running parts at 300 MHz (P = 3.3 ns), use 10 ns as the minimum CLKR/X clock cycle (by setting the appropriate CLKGDV ratio or external clock source). When running parts at 100 MHz (P = 10 ns), use 2P = 20 ns (50 MHz) as the minimum CLKR/X clock cycle. The maximum bit rate for McBSP-to-McBSP communications applies when the serial port is a master of the clock and frame syncs (with CLKR connected to CLKX, FSR connected to FSX, CLKXM = FSXM = 1, and CLKRM = FSRM = 0) in data delay 1 or 2 mode (R/XDATDLY = 01b or 10b) and the other device the McBSP communicates to is a slave.

# C = H or L
S = sample rate generator input clock = P if CLKSM = 1 (P = 1/CPU clock frequency)
= sample rate generator input clock = P_clks if CLKSM = 0 (P_clks = CLKS period)
H = CLKX high pulse width = (CLKGDV/2 + 1) * S if CLKGDV is even
= (CLKGDV + 1)/2 * S if CLKGDV is odd or zero
L = CLKX low pulse width = (CLKGDV/2) * S if CLKGDV is even
= (CLKGDV + 1)/2 * S if CLKGDV is odd or zero
CLKGDV should be set appropriately to ensure the McBSP bit rate does not exceed the 100-MHz limit.

MULTICHANNEL BUFFERED SERIAL PORT TIMING (CONTINUED)

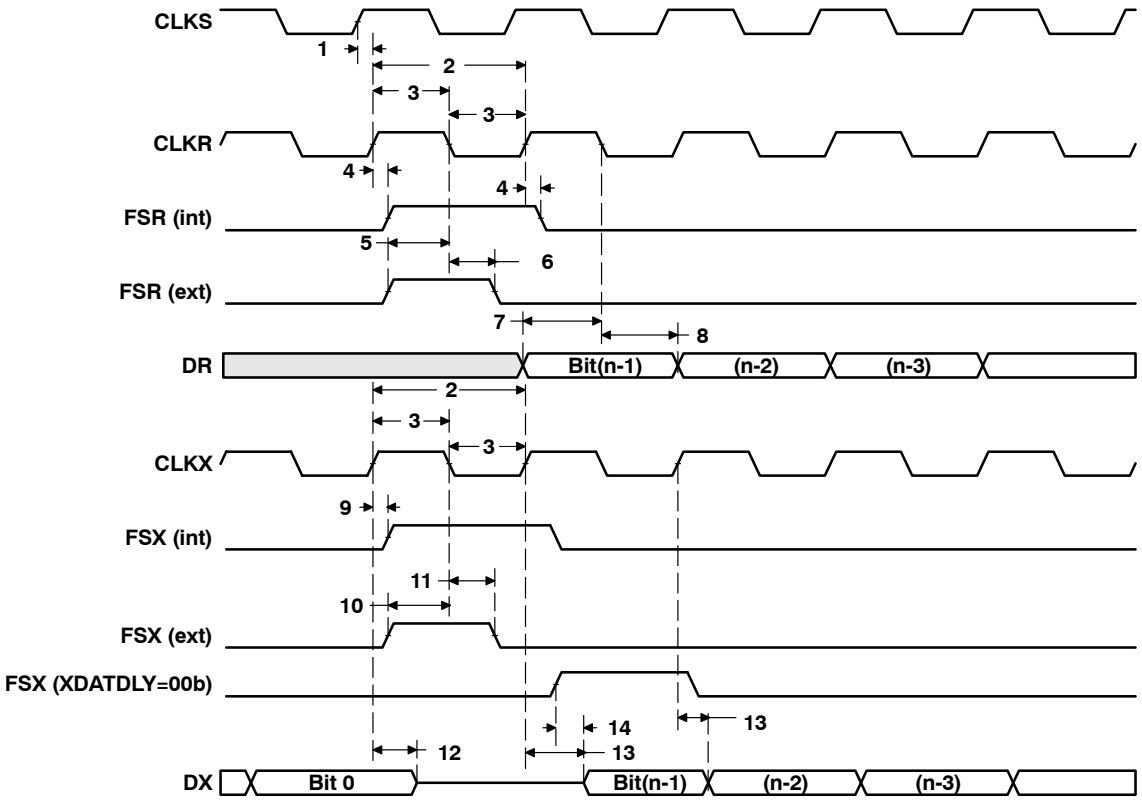

Figure 50. McBSP Timings

MULTICHANNEL BUFFERED SERIAL PORT TIMING (CONTINUED)

timing requirements for FSR when GSYNC = 1 (see Figure 51)

NO.			-250 -300		UNIT
			MIN	MAX	
1	$t_{su(FRH-CKSH)}$	Setup time, FSR high before CLKS high	4		ns
2	$t_{h(CKSH-FRH)}$	Hold time, FSR high after CLKS high	4		ns

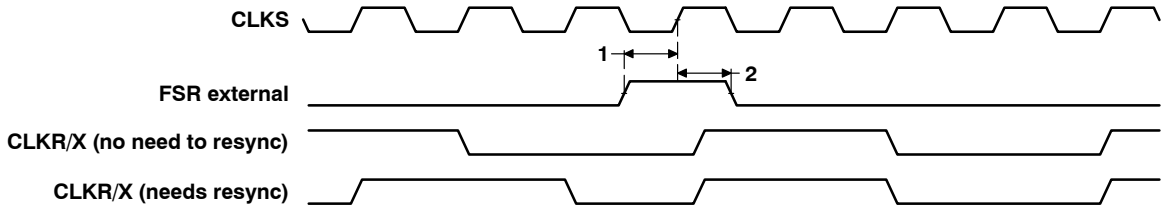

Figure 51. FSR Timing When GSYNC = 1

MULTICHANNEL BUFFERED SERIAL PORT TIMING (CONTINUED)

timing requirements for McBSP as SPI master or slave: CLKSTP = 10b, CLKXP = 0†‡ (see Figure 52)

NO.			-250 -300				UNIT
			MASTER		SLAVE		
			MIN	MAX	MIN	MAX	
4	$t_{su(DRV-CKXL)}$	Setup time, DR valid before CLKX low	12		2 – 3P		ns
5	$t_{h(CKXL-DRV)}$	Hold time, DR valid after CLKX low	4		5 + 6P		ns

† P = 1/CPU clock frequency in ns. For example, when running parts at 300 MHz, use P = 3.3 ns.
‡ For all SPI slave modes, CLKG is programmed as 1/2 of the CPU clock by setting CLKSM = CLKGDV = 1.

switching characteristics over recommended operating conditions for McBSP as SPI master or slave: CLKSTP = 10b, CLKXP = 0†‡ (see Figure 52)

NO.	PARAMETER		-250 -300				UNIT
			MASTER§		SLAVE		
			MIN	MAX	MIN	MAX	
1	$t_{h(CKXL-FXL)}$	Hold time, FSX low after CLKX low¶	T – 2	T + 3			ns
2	$t_{d(FXL-CKXH)}$	Delay time, FSX low to CLKX high#	L – 2	L + 3			ns
3	$t_{d(CKXH-DXV)}$	Delay time, CLKX high to DX valid	–3	4	3P + 4	5P + 17	ns
6	$t_{dis(CKXL-DXHZ)}$	Disable time, DX high impedance following last data bit from CLKX low	L – 2	L + 3			ns
7	$t_{dis(FXH-DXHZ)}$	Disable time, DX high impedance following last data bit from FSX high			P + 3	3P + 17	ns
8	$t_{d(FXL-DXV)}$	Delay time, FSX low to DX valid			2P + 2	4P + 17	ns

† P = 1/CPU clock frequency in ns. For example, when running parts at 300 MHz, use P = 3.3 ns.
‡ For all SPI slave modes, CLKG is programmed as 1/2 of the CPU clock by setting CLKSM = CLKGDV = 1.
§ S = sample rate generator input clock = P if CLKSM = 1 (P = 1/CPU clock frequency)
= sample rate generator input clock = P_clks if CLKSM = 0 (P_clks = CLKS period)
T = CLKX period = (1 + CLKGDV) * S
H = CLKX high pulse width = (CLKGDV/2 + 1) * S if CLKGDV is even
= (CLKGDV + 1)/2 * S if CLKGDV is odd or zero
L = CLKX low pulse width = (CLKGDV/2) * S if CLKGDV is even
= (CLKGDV + 1)/2 * S if CLKGDV is odd or zero
CLKGDV should be set appropriately to ensure the McBSP bit rate does not exceed the 100-MHz limit.
¶ FSRP = FSXP = 1. As a SPI master, FSX is inverted to provide active-low slave-enable output. As a slave, the active-low signal input on FSX and FSR is inverted before being used internally.
CLKXM = FSXM = 1, CLKRM = FSRM = 0 for master McBSP
CLKXM = CLKRM = FSXM = FSRM = 0 for slave McBSP
# FSX should be low before the rising edge of clock to enable slave devices and then begin a SPI transfer at the rising edge of the master clock (CLKX).

MULTICHANNEL BUFFERED SERIAL PORT TIMING (CONTINUED)

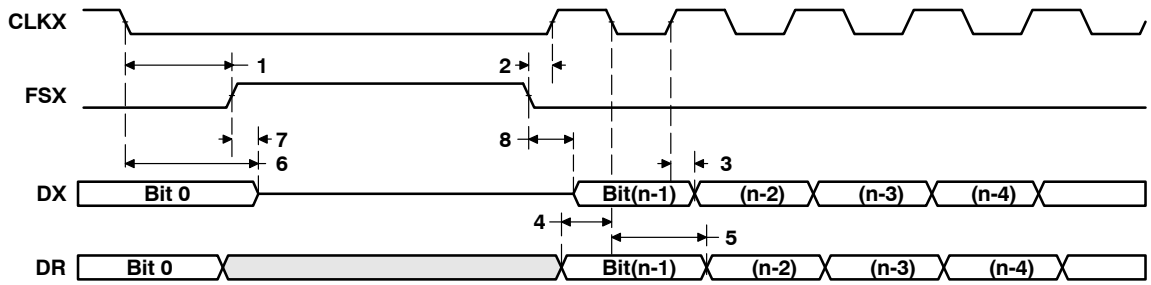

Figure 52. McBSP Timing as SPI Master or Slave: CLKSTP = 10b, CLKXP = 0

MULTICHANNEL BUFFERED SERIAL PORT TIMING (CONTINUED)

timing requirements for McBSP as SPI master or slave: CLKSTP = 11b, CLKXP = 0†‡ (see Figure 53)

NO.			-250 -300				UNIT
			MASTER		SLAVE		
			MIN	MAX	MIN	MAX	
4	$t_{su(DRV-CKXH)}$	Setup time, DR valid before CLKX high	12		2 – 3P		ns
5	$t_{h(CKXH-DRV)}$	Hold time, DR valid after CLKX high	4		5 + 6P		ns

† P = 1/CPU clock frequency in ns. For example, when running parts at 300 MHz, use P = 3.3 ns.
‡ For all SPI slave modes, CLKG is programmed as 1/2 of the CPU clock by setting CLKSM = CLKGDV = 1.

switching characteristics over recommended operating conditions for McBSP as SPI master or slave: CLKSTP = 11b, CLKXP = 0†‡ (see Figure 53)

NO.	PARAMETER		-250 -300				UNIT
			MASTER§		SLAVE		
			MIN	MAX	MIN	MAX	
1	$t_{h(CKXL-FXL)}$	Hold time, FSX low after CLKX low¶	L – 2	L + 3			ns
2	$t_{d(FXL-CKXH)}$	Delay time, FSX low to CLKX high#	T – 2	T + 3			ns
3	$t_{d(CKXL-DXV)}$	Delay time, CLKX low to DX valid	–2	4	3P + 4	5P + 17	ns
6	$t_{dis(CKXL-DXHZ)}$	Disable time, DX high impedance following last data bit from CLKX low	–2	4	3P + 3	5P + 17	ns
7	$t_{d(FXL-DXV)}$	Delay time, FSX low to DX valid	H – 2	H + 4	2P + 2	4P + 17	ns

† P = 1/CPU clock frequency in ns. For example, when running parts at 300 MHz, use P = 3.3 ns.
‡ For all SPI slave modes, CLKG is programmed as 1/2 of the CPU clock by setting CLKSM = CLKGDV = 1.
§ S = sample rate generator input clock = P if CLKSM = 1 (P = 1/CPU clock frequency)
= sample rate generator input clock = P_clks if CLKSM = 0 (P_clks = CLKS period)
T = CLKX period = (1 + CLKGDV) * S
H = CLKX high pulse width = (CLKGDV/2 + 1) * S if CLKGDV is even
= (CLKGDV + 1)/2 * S if CLKGDV is odd or zero
L = CLKX low pulse width = (CLKGDV/2) * S if CLKGDV is even
= (CLKGDV + 1)/2 * S if CLKGDV is odd or zero
The maximum transfer rate for SPI mode is limited to the above AC timing constraints.
¶ FSRP = FSXP = 1. As a SPI master, FSX is inverted to provide active-low slave-enable output. As a slave, the active-low signal input on FSX and FSR is inverted before being used internally.
CLKXM = FSXM = 1, CLKRM = FSRM = 0 for master McBSP
CLKXM = CLKRM = FSXM = FSRM = 0 for slave McBSP
# FSX should be low before the rising edge of clock to enable slave devices and then begin a SPI transfer at the rising edge of the master clock (CLKX).

MULTICHANNEL BUFFERED SERIAL PORT TIMING (CONTINUED)

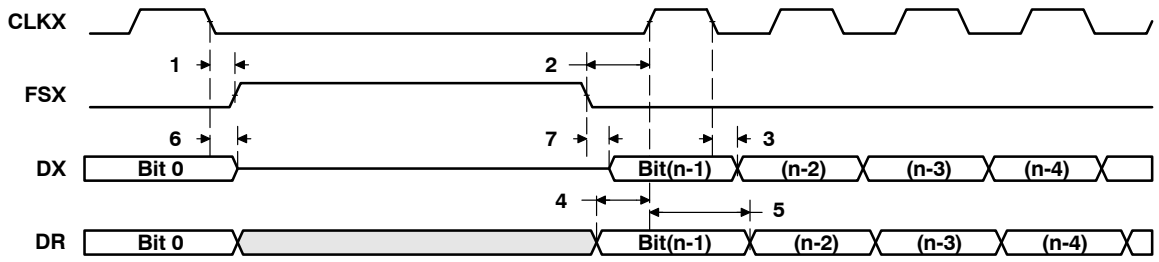

Figure 53. McBSP Timing as SPI Master or Slave: CLKSTP = 11b, CLKXP = 0

MULTICHANNEL BUFFERED SERIAL PORT TIMING (CONTINUED)

timing requirements for McBSP as SPI master or slave: CLKSTP = 10b, CLKXP = 1†‡ (see Figure 54)

NO.			-250 -300				UNIT
			MASTER		SLAVE		
			MIN	MAX	MIN	MAX	
4	$t_{su(DRV-CKXH)}$	Setup time, DR valid before CLKX high	12		2 – 3P		ns
5	$t_{h(CKXH-DRV)}$	Hold time, DR valid after CLKX high	4		5 + 6P		ns

† P = 1/CPU clock frequency in ns. For example, when running parts at 300 MHz, use P = 3.3 ns.
‡ For all SPI slave modes, CLKG is programmed as 1/2 of the CPU clock by setting CLKSM = CLKGDV = 1.

switching characteristics over recommended operating conditions for McBSP as SPI master or slave: CLKSTP = 10b, CLKXP = 1†‡ (see Figure 54)

NO.	PARAMETER		-250 -300				UNIT
			MASTER§		SLAVE		
			MIN	MAX	MIN	MAX	
1	$t_{h(CKXH-FXL)}$	Hold time, FSX low after CLKX high¶	T – 2	T + 3			ns
2	$t_{d(FXL-CKXL)}$	Delay time, FSX low to CLKX low#	H – 2	H + 3			ns
3	$t_{d(CKXL-DXV)}$	Delay time, CLKX low to DX valid	–3	4	3P + 4	5P + 17	ns
6	$t_{dis(CKXH-DXHZ)}$	Disable time, DX high impedance following last data bit from CLKX high	H – 2	H + 3			ns
7	$t_{dis(FXH-DXHZ)}$	Disable time, DX high impedance following last data bit from FSX high			P + 3	3P + 17	ns
8	$t_{d(FXL-DXV)}$	Delay time, FSX low to DX valid			2P + 2	4P + 17	ns

† P = 1/CPU clock frequency in ns. For example, when running parts at 300 MHz, use P = 3.3 ns.
‡ For all SPI slave modes, CLKG is programmed as 1/2 of the CPU clock by setting CLKSM = CLKGDV = 1.
§ S = sample rate generator input clock = P if CLKSM = 1 (P = 1/CPU clock frequency)
= sample rate generator input clock = P_clks if CLKSM = 0 (P_clks = CLKS period)
T = CLKX period = (1 + CLKGDV) * S
H = CLKX high pulse width = (CLKGDV/2 + 1) * S if CLKGDV is even
= (CLKGDV + 1)/2 * S if CLKGDV is odd or zero
L = CLKX low pulse width = (CLKGDV/2) * S if CLKGDV is even
= (CLKGDV + 1)/2 * S if CLKGDV is odd or zero
The maximum transfer rate for SPI mode is limited to the above AC timing constraints.
¶ FSRP = FSXP = 1. As a SPI master, FSX is inverted to provide active-low slave-enable output. As a slave, the active-low signal input on FSX and FSR is inverted before being used internally.
CLKXM = FSXM = 1, CLKRM = FSRM = 0 for master McBSP
CLKXM = CLKRM = FSXM = FSRM = 0 for slave McBSP
# FSX should be low before the rising edge of clock to enable slave devices and then begin a SPI transfer at the rising edge of the master clock (CLKX).

MULTICHANNEL BUFFERED SERIAL PORT TIMING (CONTINUED)

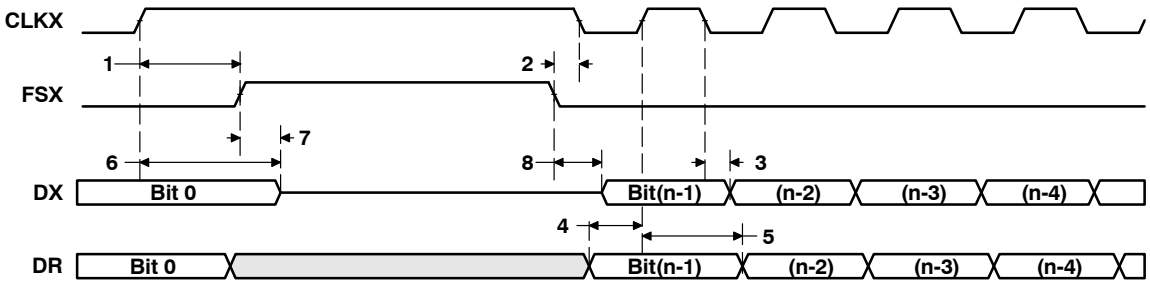

Figure 54. McBSP Timing as SPI Master or Slave: CLKSTP = 10b, CLKXP = 1

MULTICHANNEL BUFFERED SERIAL PORT TIMING (CONTINUED)

timing requirements for McBSP as SPI master or slave: CLKSTP = 11b, CLKXP = 1†‡ (see Figure 55)

NO.			-250 -300				UNIT
			MASTER		SLAVE		
			MIN	MAX	MIN	MAX	
4	$t_{su(DRV-CKXL)}$	Setup time, DR valid before CLKX low	12		2 – 3P		ns
5	$t_{h(CKXL-DRV)}$	Hold time, DR valid after CLKX low	4		5 + 6P		ns

† P = 1/CPU clock frequency in ns. For example, when running parts at 300 MHz, use P = 3.3 ns.
‡ For all SPI slave modes, CLKG is programmed as 1/2 of the CPU clock by setting CLKSM = CLKGDV = 1.

switching characteristics over recommended operating conditions for McBSP as SPI master or slave: CLKSTP = 11b, CLKXP = 1†‡ (see Figure 55)

NO.	PARAMETER		-250 -300				UNIT
			MASTER§		SLAVE		
			MIN	MAX	MIN	MAX	
1	$t_{h(CKXH-FXL)}$	Hold time, FSX low after CLKX high¶	H – 2	H + 3			ns
2	$t_{d(FXL-CKXL)}$	Delay time, FSX low to CLKX low#	T – 2	T + 2			ns
3	$t_{d(CKXH-DXV)}$	Delay time, CLKX high to DX valid	–3	4	3P + 4	5P + 17	ns
6	$t_{dis(CKXH-DXHZ)}$	Disable time, DX high impedance following last data bit from CLKX high	–2	4	3P + 3	5P + 17	ns
7	$t_{d(FXL-DXV)}$	Delay time, FSX low to DX valid	L – 2	L + 5	2P + 2	4P + 17	ns

† P = 1/CPU clock frequency in ns. For example, when running parts at 300 MHz, use P = 3.3 ns.
‡ For all SPI slave modes, CLKG is programmed as 1/2 of the CPU clock by setting CLKSM = CLKGDV = 1.
§ S = sample rate generator input clock = P if CLKSM = 1 (P = 1/CPU clock frequency)
= sample rate generator input clock = P_clks if CLKSM = 0 (P_clks = CLKS period)
T = CLKX period = (1 + CLKGDV) * S
H = CLKX high pulse width = (CLKGDV/2 + 1) * S if CLKGDV is even
= (CLKGDV + 1)/2 * S if CLKGDV is odd or zero
L = CLKX low pulse width = (CLKGDV/2) * S if CLKGDV is even
= (CLKGDV + 1)/2 * S if CLKGDV is odd or zero
CLKGDV should be set appropriately to ensure the McBSP bit rate does not exceed the 100-MHz limit.
¶ FSRP = FSXP = 1. As a SPI master, FSX is inverted to provide active-low slave-enable output. As a slave, the active-low signal input on FSX and FSR is inverted before being used internally.
CLKXM = FSXM = 1, CLKRM = FSRM = 0 for master McBSP
CLKXM = CLKRM = FSXM = FSRM = 0 for slave McBSP
# FSX should be low before the rising edge of clock to enable slave devices and then begin a SPI transfer at the rising edge of the master clock (CLKX).

MULTICHANNEL BUFFERED SERIAL PORT TIMING (CONTINUED)

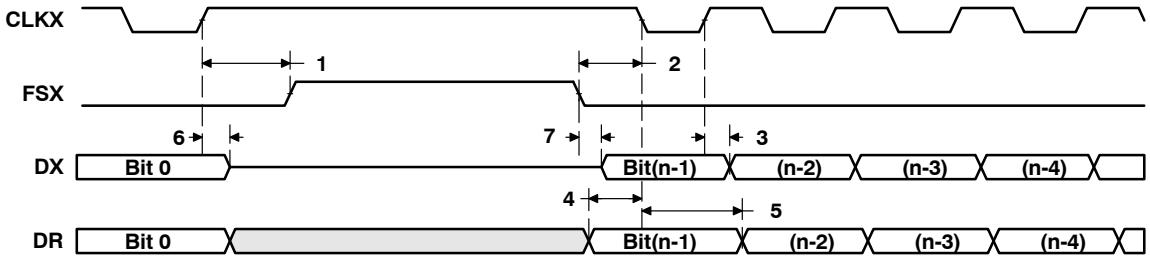

Figure 55. McBSP Timing as SPI Master or Slave: CLKSTP = 11b, CLKXP = 1

DMAC, TIMER, POWER-DOWN TIMING

switching characteristics over recommended operating conditions for DMAC outputs† (see Figure 56)

NO.	PARAMETER		-250 -300		UNIT
			MIN	MAX	
1	$t_{w(DMACH)}$	Pulse duration, DMAC high	2P – 3		ns

† P = 1/CPU clock frequency in ns. For example, when running parts at 300 MHz, use P = 3.3 ns.

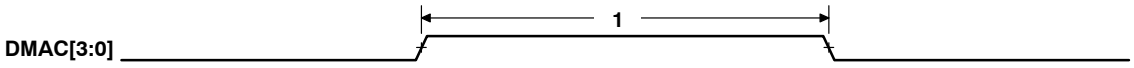

Figure 56. DMAC Timing

timing requirements for timer inputs† (see Figure 57)

NO.			-250 -300		UNIT
			MIN	MAX	
1	$t_{w(TINPH)}$	Pulse duration, TINP high	2P		ns
2	$t_{w(TINPL)}$	Pulse duration, TINP low	2P		ns

† P = 1/CPU clock frequency in ns. For example, when running parts at 300 MHz, use P = 3.3 ns.

switching characteristics over recommended operating conditions for timer outputs† (see Figure 57)

NO.	PARAMETER		-250 -300		UNIT
			MIN	MAX	
3	$t_{w(TOUTH)}$	Pulse duration, TOUT high	2P – 3		ns
4	$t_{w(TOUTL)}$	Pulse duration, TOUT low	2P – 3		ns

† P = 1/CPU clock frequency in ns. For example, when running parts at 300 MHz, use P = 3.3 ns.

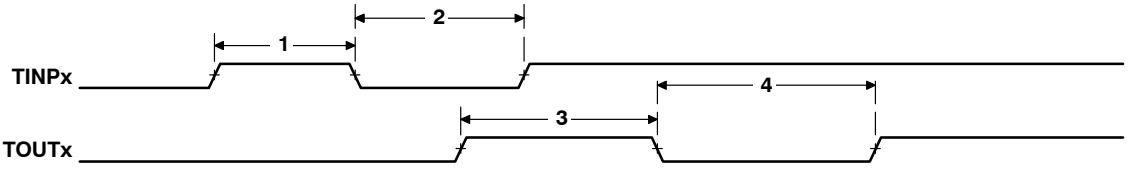

Figure 57. Timer Timing

DMAC, TIMER, POWER-DOWN TIMING (CONTINUED)

switching characteristics over recommended operating conditions for power-down outputs† (see Figure 58)

NO.	PARAMETER		-250 -300		UNIT
			MIN	MAX	
1	$t_{w(PDH)}$	Pulse duration, PD high	2P		ns

† P = 1/CPU clock frequency in ns. For example, when running parts at 300 MHz, use P = 3.3 ns.

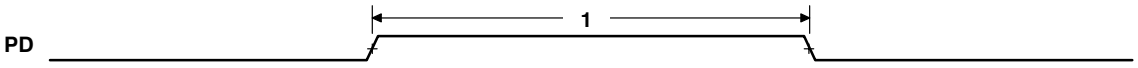

Figure 58. Power-Down Timing

JTAG TEST-PORT TIMING

timing requirements for JTAG test port (see Figure 59)

NO.			-250 -300		UNIT
			MIN	MAX	
1	$t_{c(TCK)}$	Cycle time, TCK	35		ns
3	$t_{su(TDIV-TCKH)}$	Setup time, TDI/TMS/$\overline{TRST}$ valid before TCK high	11		ns
4	$t_{h(TCKH-TDIV)}$	Hold time, TDI/TMS/$\overline{TRST}$ valid after TCK high	9		ns

switching characteristics over recommended operating conditions for JTAG test port (see Figure 59)

NO.	PARAMETER		-250 -300		UNIT
			MIN	MAX	
2	$t_{d(TCKL-TDOV)}$	Delay time, TCK low to TDO valid	–4.5	13.5	ns

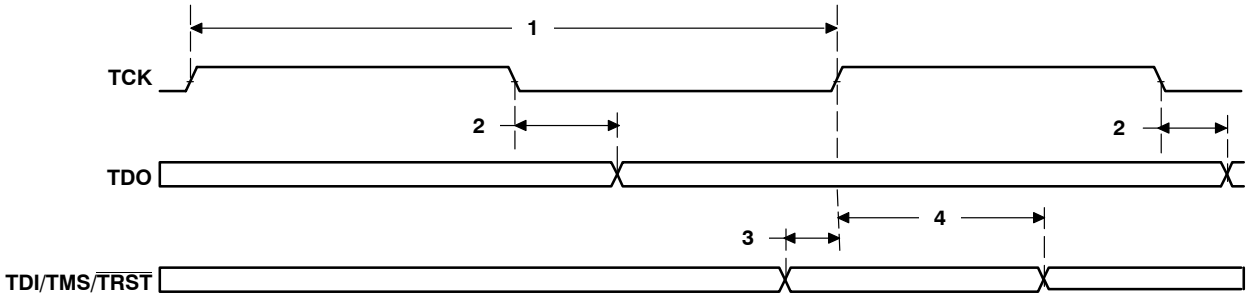

Figure 59. JTAG Test-Port Timing

MECHANICAL DATA

GNZ (S–PBGA–N352) **PLASTIC BALL GRID ARRAY**

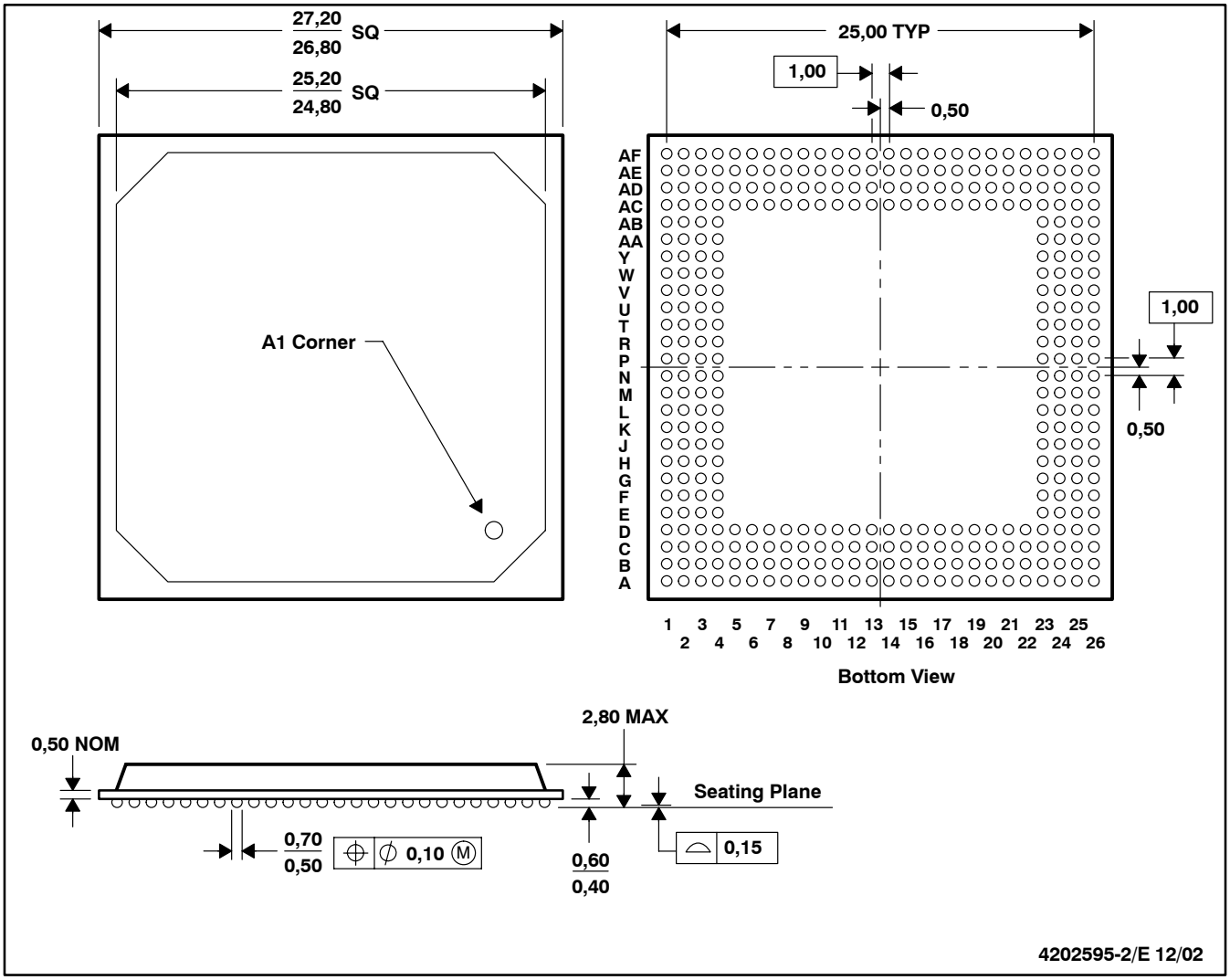

NOTES: A. All linear dimensions are in millimeters.
B. This drawing is subject to change without notice.
C. Flip chip application only.
D. Substrate color may vary.

thermal resistance characteristics (S-PBGA package)

NO			°C/W	AIR FLOW M/S†
1	$R\Theta_{JC}$	Junction-to-case	6.35	N/A
2	$R\Theta_{JA}$	Junction-to-free air	20.0	0.00
3	$R\Theta_{JA}$	Junction-to-free air	17.0	0.50
4	$R\Theta_{JA}$	Junction-to-free air	16.3	1.00
5	$R\Theta_{JA}$	Junction-to-free air	15.2	2.00

† m/s = meters per second

MECHANICAL DATA

GLS (S-PBGA-N384) **PLASTIC BALL GRID ARRAY**

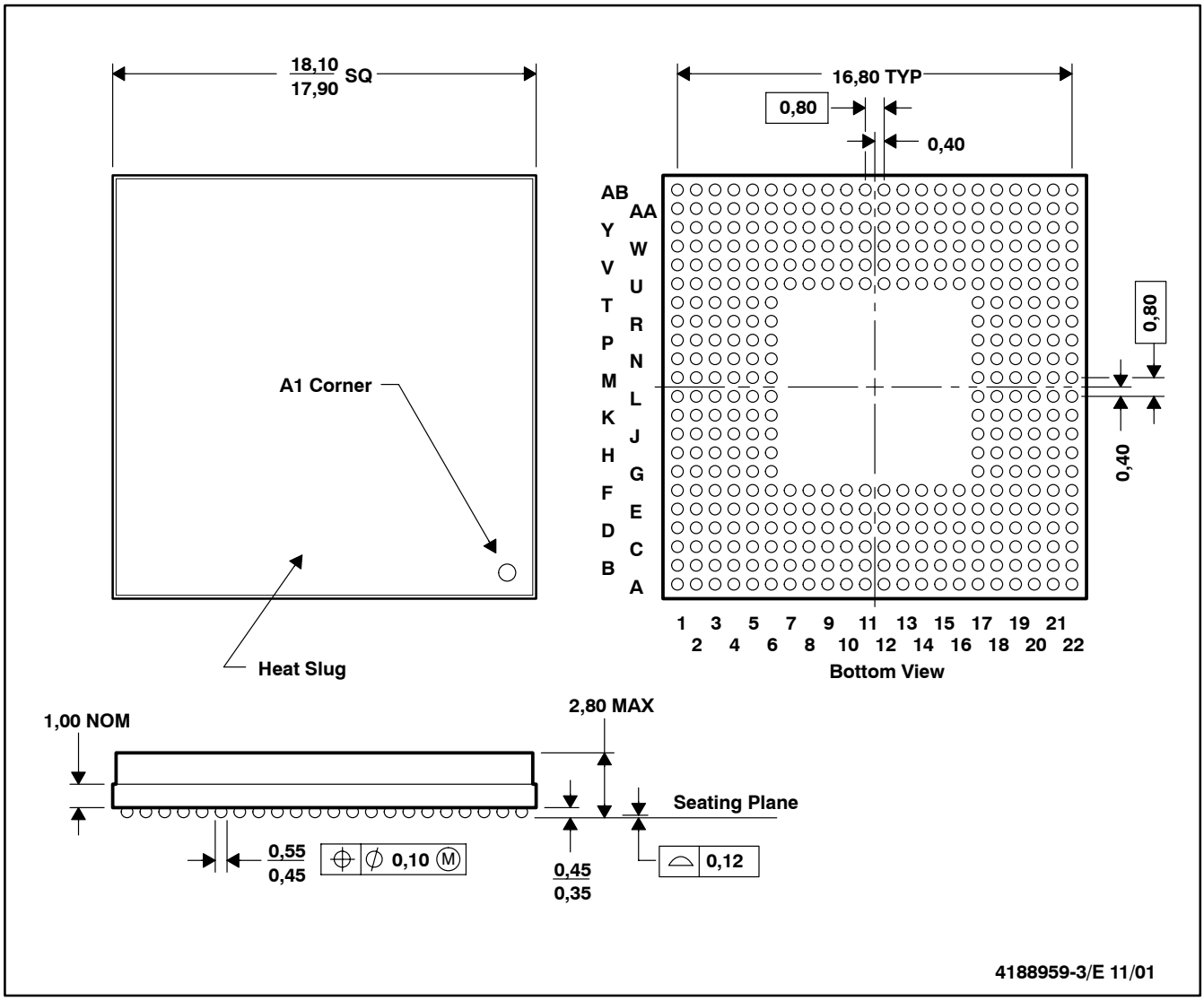

NOTES: A. All linear dimensions are in millimeters.
B. This drawing is subject to change without notice.
C. Thermally enhanced plastic package with heat slug (HSL)
D. Flip chip application only

thermal resistance characteristics (S-PBGA package)

NO			°C/W	Air Flow m/s†
1	$R\Theta_{JC}$	Junction-to-case	0.85	N/A
2	$R\Theta_{JA}$	Junction-to-free air	21.6	0.0
3	$R\Theta_{JA}$	Junction-to-free air	18.0	0.5
4	$R\Theta_{JA}$	Junction-to-free air	15.5	1.0
5	$R\Theta_{JA}$	Junction-to-free air	12.8	2.0

† m/s = meters per second

MECHANICAL DATA

GNY (S-PBGA-N384) **PLASTIC BALL GRID ARRAY**

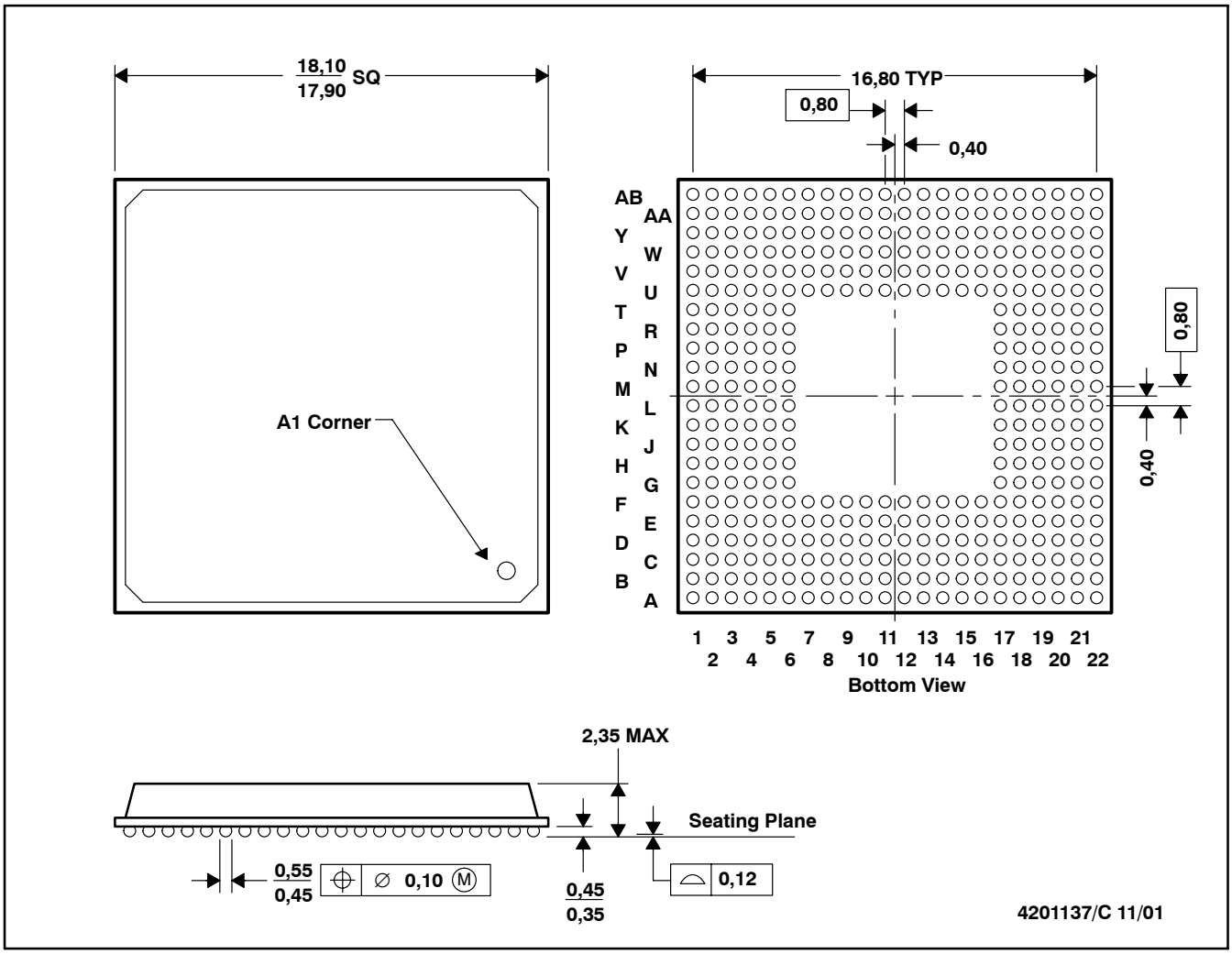

NOTES: A. All linear dimensions are in millimeters.
B. This drawing is subject to change without notice.
C. Flip chip application only
D. Substrate color may vary

thermal resistance characteristics (S-PBGA package)

NO			C6203B (°C/W)	Air Flow m/s†
1	$R\Theta_{JC}$	Junction-to-case	6.27	N/A
2	$R\Theta_{JA}$	Junction-to-free air	17.6	0.0
3	$R\Theta_{JA}$	Junction-to-free air	13.9	0.5
4	$R\Theta_{JA}$	Junction-to-free air	13.1	1.0
5	$R\Theta_{JA}$	Junction-to-free air	11.9	2.0

† m/s = meters per second

REVISION HISTORY

This data sheet revision history highlights the technical changes made to the SPRS086L device-specific data sheet to make it an SPRS086M revision.

Scope: Applicable updates to the C62x device family, specifically relating to the C6203/B devices, have been incorporated.

PAGE(S) NO.	ADDITIONS/CHANGES/DELETIONS
10	memory map summary: Changed the document reference in the last sentence of the paragraph.
11	peripheral register descriptions: Updated the information regarding the document reference.
15	DMA synchronization events: Updated the information regarding the document reference.
16	Table 14, C6202/02B DSP Interrupts: Changed the document reference in the second footnote to: TMS320C6000 DSP Interrupt Selector Reference Guide (literature number SPRU646)
38	Figure 8, PWRD Field of the CSR Register: Updated the PD1, PD2, and PD3 information that follows Figure 8.
48	switching characteristics over recommended operating conditions for CLKOUT2 table: Removed NO. 1 (parameter $t_{c(CKO2)}$) from the table.

PACKAGING INFORMATION

Orderable Device	Status [1]	Package Type	Package Drawing	Pins	Package Qty	Eco Plan [2]	Lead/Ball Finish	MSL Peak Temp [3]
TMS320C6203BGLS-3H	OBSOLETE	FC/CSP	GLS	384		TBD	Call TI	Call TI
TMS320C6203BGNY173	ACTIVE	FC/CSP	GNY	384	90	TBD	SNPB	Level-4-220C-72HR
TMS320C6203BGNY17C	ACTIVE	FC/CSP	GNY	384	90	TBD	SNPB	Level-4-220C-72HR
TMS320C6203BGNY300	ACTIVE	FC/CSP	GNY	384	90	TBD	SNPB	Level-4-220C-72HR
TMS320C6203BGNZ173	ACTIVE	FCBGA	GNZ	352	40	TBD	SNPB	Level-4-220C-72HR
TMS320C6203BGNZ300	ACTIVE	FCBGA	GNZ	352	40	TBD	SNPB	Level-4-220C-72HR
TMS320C6203BZNY300	ACTIVE	FC/CSP	ZNY	384	90	Pb-Free (RoHS Exempt)	SNAGCU	Level-4-260C-72HR
TMS32C6203BGLS173H	OBSOLETE	FC/CSP	GLS	384		TBD	Call TI	Call TI
TMS32C6203BGNZA250	ACTIVE	FCBGA	GNZ	352	40	TBD	SNPB	Level-4-220C-72HR

[1] The marketing status values are defined as follows:
ACTIVE: Product device recommended for new designs.
LIFEBUY: TI has announced that the device will be discontinued, and a lifetime-buy period is in effect.
NRND: Not recommended for new designs. Device is in production to support existing customers, but TI does not recommend using this part in a new design.
PREVIEW: Device has been announced but is not in production. Samples may or may not be available.
OBSOLETE: TI has discontinued the production of the device.

[2] Eco Plan - The planned eco-friendly classification: Pb-Free (RoHS), Pb-Free (RoHS Exempt), or Green (RoHS & no Sb/Br) - please check http://www.ti.com/productcontent for the latest availability information and additional product content details.
TBD: The Pb-Free/Green conversion plan has not been defined.
Pb-Free (RoHS): TI's terms "Lead-Free" or "Pb-Free" mean semiconductor products that are compatible with the current RoHS requirements for all 6 substances, including the requirement that lead not exceed 0.1% by weight in homogeneous materials. Where designed to be soldered at high temperatures, TI Pb-Free products are suitable for use in specified lead-free processes.
Pb-Free (RoHS Exempt): This component has a RoHS exemption for either 1) lead-based flip-chip solder bumps used between the die and package, or 2) lead-based die adhesive used between the die and leadframe. The component is otherwise considered Pb-Free (RoHS compatible) as defined above.
Green (RoHS & no Sb/Br): TI defines "Green" to mean Pb-Free (RoHS compatible), and free of Bromine (Br) and Antimony (Sb) based flame retardants (Br or Sb do not exceed 0.1% by weight in homogeneous material)

[3] MSL, Peak Temp. -- The Moisture Sensitivity Level rating according to the JEDEC industry standard classifications, and peak solder temperature.

Important Information and Disclaimer: The information provided on this page represents TI's knowledge and belief as of the date that it is provided. TI bases its knowledge and belief on information provided by third parties, and makes no representation or warranty as to the accuracy of such information. Efforts are underway to better integrate information from third parties. TI has taken and continues to take reasonable steps to provide representative and accurate information but may not have conducted destructive testing or chemical analysis on incoming materials and chemicals. TI and TI suppliers consider certain information to be proprietary, and thus CAS numbers and other limited information may not be available for release.

In no event shall TI's liability arising out of such information exceed the total purchase price of the TI part(s) at issue in this document sold by TI to Customer on an annual basis.

MPBG082D – NOVEMBER 1998 – REVISED JANUARY 2002

GLS (S-PBGA-N384) **PLASTIC BALL GRID ARRAY**

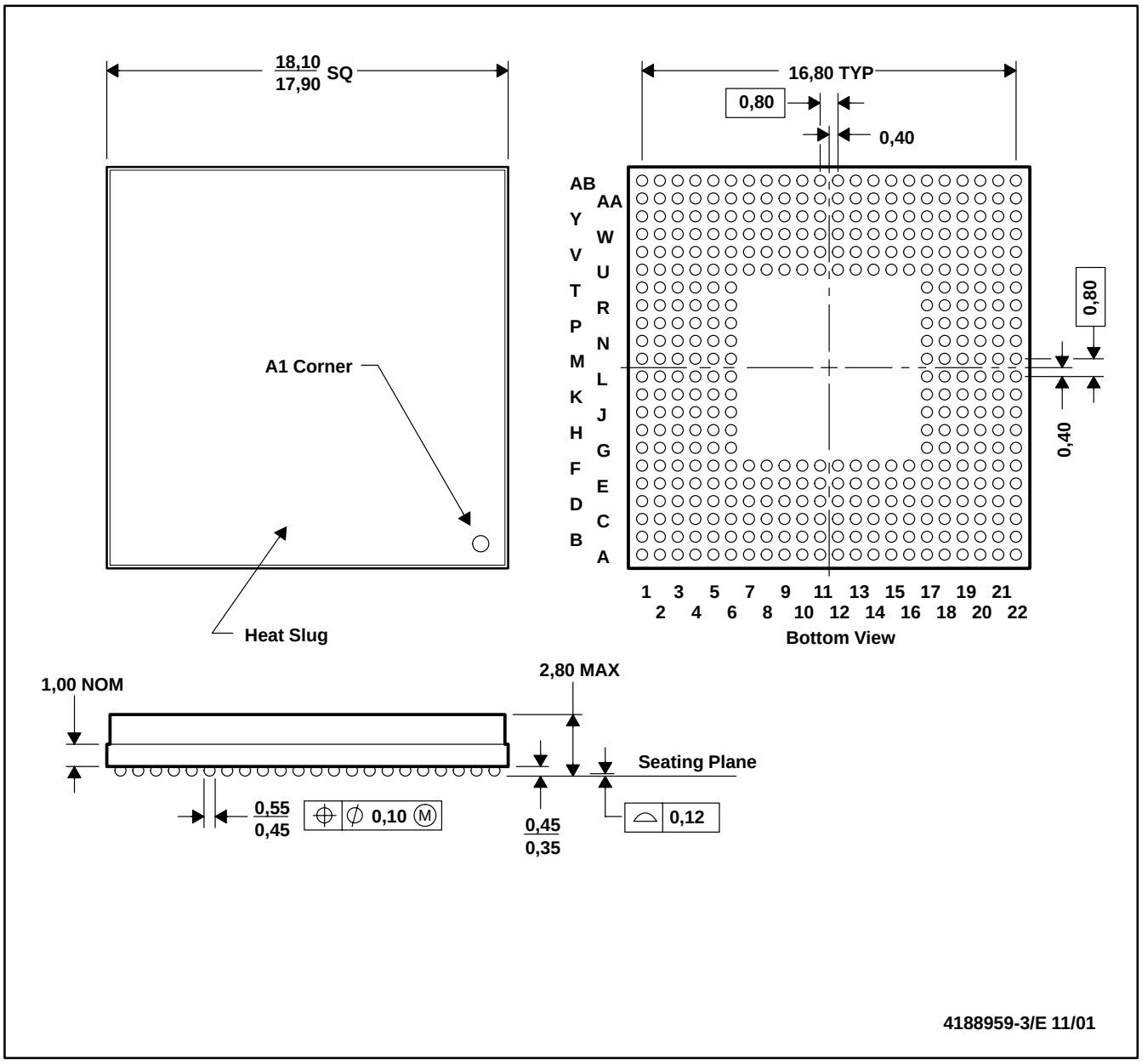

NOTES: A. All linear dimensions are in millimeters.
B. This drawing is subject to change without notice.
C. Thermally enhanced plastic package with heat slug (HSL)
D. Flip chip application only

MPBG139B – JUNE 2000 – REVISED FEBRUARY 2002

GNY (S-PBGA-N384) **PLASTIC BALL GRID ARRAY**

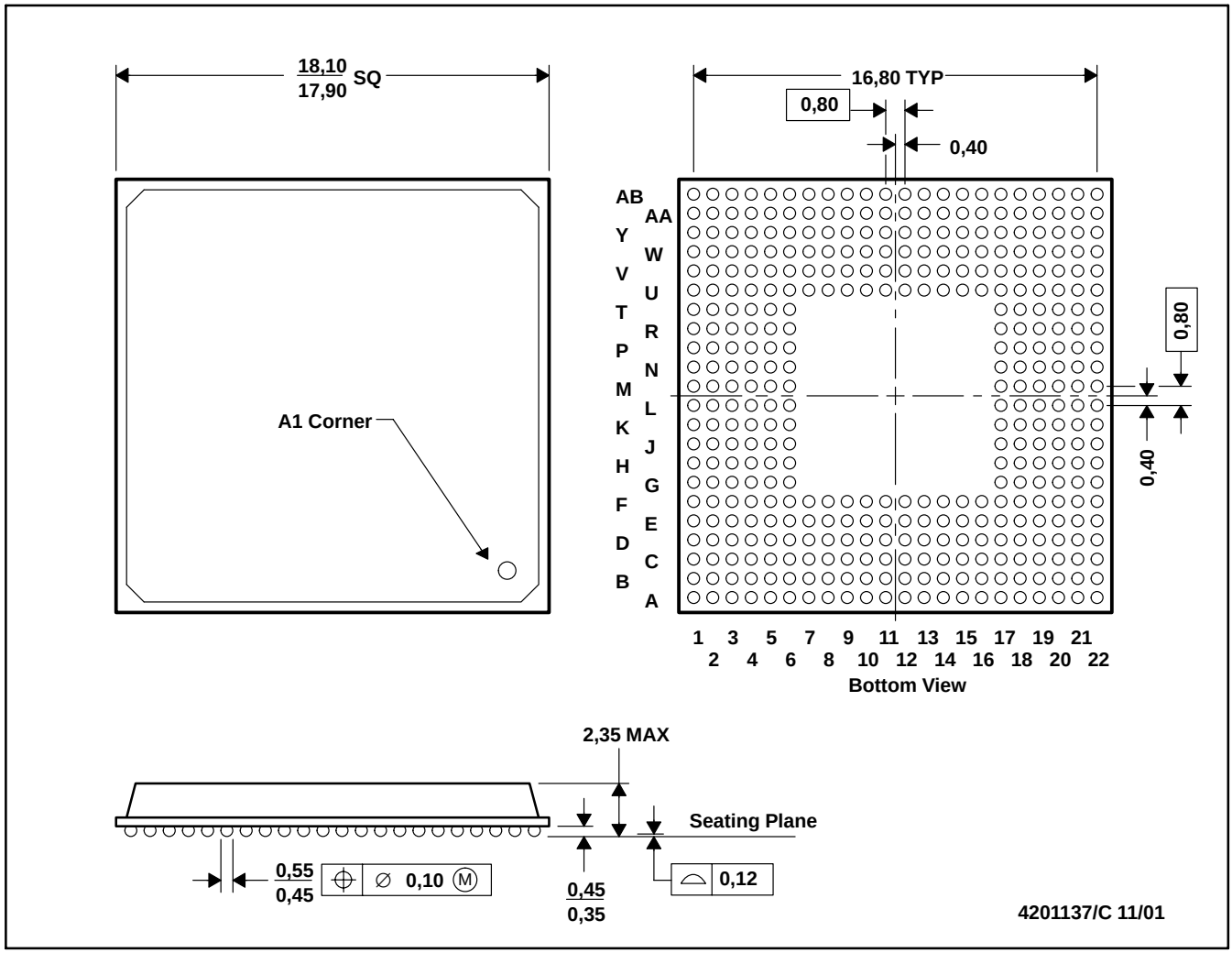

NOTES: A. All linear dimensions are in millimeters.
B. This drawing is subject to change without notice.
C. Flip chip application only
D. Substrate color may vary

MPBG181D – MARCH 2001 – REVISED DECEMBER 2002

GNZ (S–PBGA–N352) **PLASTIC BALL GRID ARRAY**

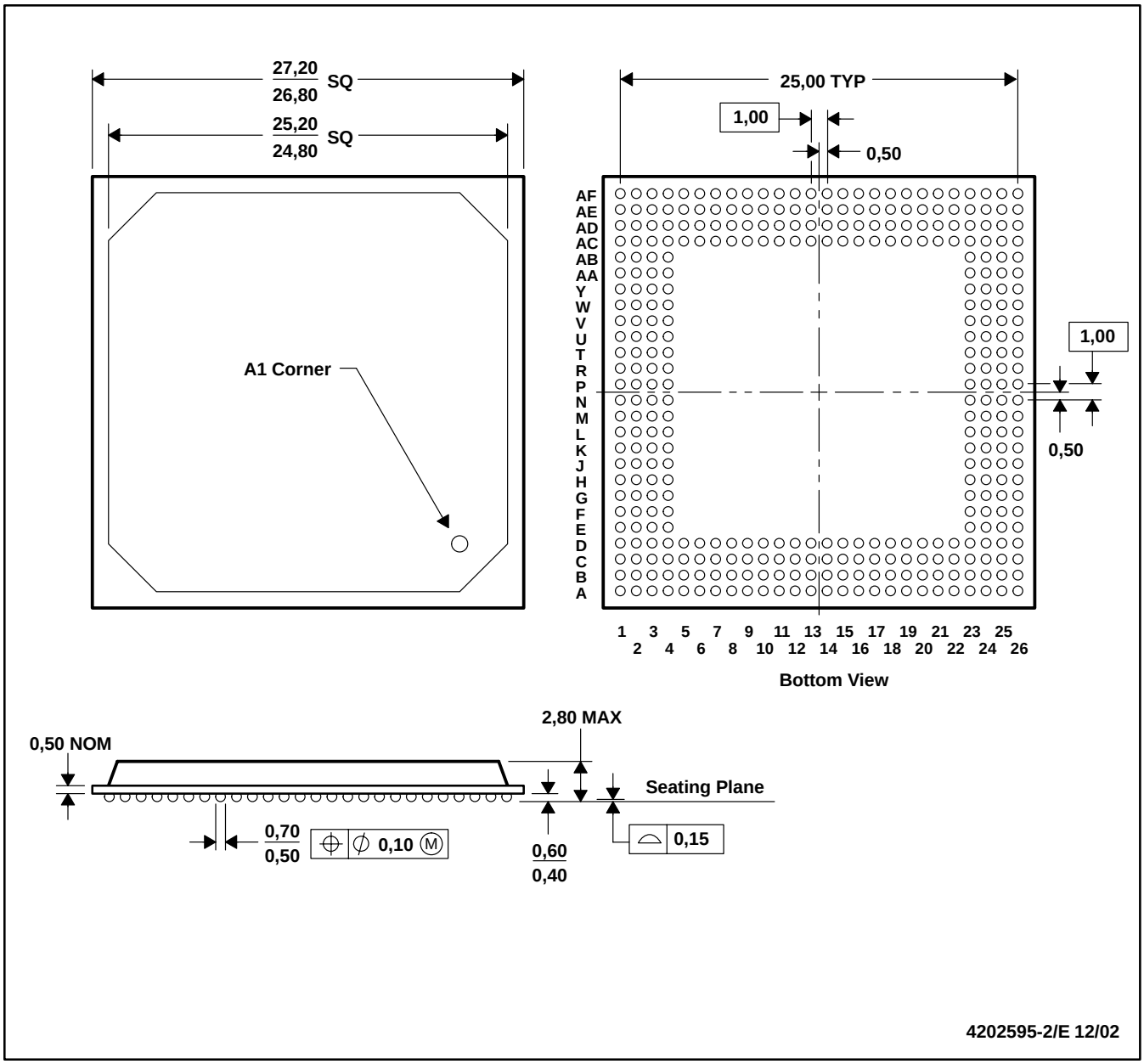

NOTES: A. All linear dimensions are in millimeters.
B. This drawing is subject to change without notice.
C. Flip chip application only.
D. Substrate color may vary.

IMPORTANT NOTICE

Texas Instruments Incorporated and its subsidiaries (TI) reserve the right to make corrections, modifications, enhancements, improvements, and other changes to its products and services at any time and to discontinue any product or service without notice. Customers should obtain the latest relevant information before placing orders and should verify that such information is current and complete. All products are sold subject to TI's terms and conditions of sale supplied at the time of order acknowledgment.

TI warrants performance of its hardware products to the specifications applicable at the time of sale in accordance with TI's standard warranty. Testing and other quality control techniques are used to the extent TI deems necessary to support this warranty. Except where mandated by government requirements, testing of all parameters of each product is not necessarily performed.

TI assumes no liability for applications assistance or customer product design. Customers are responsible for their products and applications using TI components. To minimize the risks associated with customer products and applications, customers should provide adequate design and operating safeguards.

TI does not warrant or represent that any license, either express or implied, is granted under any TI patent right, copyright, mask work right, or other TI intellectual property right relating to any combination, machine, or process in which TI products or services are used. Information published by TI regarding third-party products or services does not constitute a license from TI to use such products or services or a warranty or endorsement thereof. Use of such information may require a license from a third party under the patents or other intellectual property of the third party, or a license from TI under the patents or other intellectual property of TI.

Reproduction of information in TI data books or data sheets is permissible only if reproduction is without alteration and is accompanied by all associated warranties, conditions, limitations, and notices. Reproduction of this information with alteration is an unfair and deceptive business practice. TI is not responsible or liable for such altered documentation.

Resale of TI products or services with statements different from or beyond the parameters stated by TI for that product or service voids all express and any implied warranties for the associated TI product or service and is an unfair and deceptive business practice. TI is not responsible or liable for any such statements.

Following are URLs where you can obtain information on other Texas Instruments products and application solutions:

Products		**Applications**	
Amplifiers	amplifier.ti.com	Audio	www.ti.com/audio
Data Converters	dataconverter.ti.com	Automotive	www.ti.com/automotive
DSP	dsp.ti.com	Broadband	www.ti.com/broadband
Interface	interface.ti.com	Digital Control	www.ti.com/digitalcontrol
Logic	logic.ti.com	Military	www.ti.com/military
Power Mgmt	power.ti.com	Optical Networking	www.ti.com/opticalnetwork
Microcontrollers	microcontroller.ti.com	Security	www.ti.com/security
		Telephony	www.ti.com/telephony
		Video & Imaging	www.ti.com/video
		Wireless	www.ti.com/wireless

Mailing Address: Texas Instruments
Post Office Box 655303 Dallas, Texas 75265

Copyright © 2006, Texas Instruments Incorporated

Looking for pricing, stock, or lifecycle information?

Click below to explore more details on WIN SOURCE:

- View TMS320C6203BGNY17C on WIN SOURCE
- Texas Instruments Information

Optimize Your Supply Chain with WIN SOURCE Solutions

- Global Sourcing Solution
- Obsolete Management
- Cost Control Management
- Shortage Management
- Alternative Solution
- Excess Inventory Management