# Floating-Point Digital Signal Processor

**Check for Samples: SM320C6727B**

## 1 Floating-Point Digital Signal Processor

### 1.1 Features

- 32-/64-Bit 250-MHz Floating-Point DSP
- Upgrades to C67x+ CPU From C67x™ DSP Generation:
  - 2X CPU Registers [64 General-Purpose]
  - New Audio-Specific Instructions
  - Compatible With the C67x CPU
- Enhanced Memory System
  - 256K-Byte Unified Program/Data RAM
  - 384K-Byte Unified Program/Data ROM
  - Single-Cycle Data Access From CPU
  - Large Program Cache (32K Byte) Supports RAM, ROM, and External Memory
- External Memory Interface (EMIF) Supports
  - 133-MHz SDRAM (16- or 32-Bit)
  - Asynchronous NOR Flash, SRAM (8-,16-, or 32-Bit)
  - NAND Flash (8- or 16-Bit)
- Enhanced I/O System
  - High-Performance Crossbar Switch
  - Dedicated McASP DMA Bus
  - Deterministic I/O Performance
- dMAX (Dual Data Movement Accelerator) Supports:
  - 16 Independent Channels
  - Concurrent Processing of Two Transfer Requests
  - 1-, 2-, and 3-Dimensional Memory-to-Memory and Memory-to-Peripheral Data Transfers
  - Circular Addressing Where the Size of a Circular Buffer (FIFO) is not Limited to $2^n$
  - Table-Based Multi-Tap Delay Read and Write Transfers From/To a Circular Buffer
- Three Multichannel Audio Serial Ports
  - Transmit/Receive Clocks up to 50 MHz
  - Six Clock Zones and 16 Serial Data Pins
  - Supports TDM, I2S, and Similar Formats
  - DIT-Capable (McASP2)
- Universal Host-Port Interface (UHPI)
  - 32-Bit-Wide Data Bus for High Bandwidth
  - Muxed and Non-Muxed Address and Data
- Two 10-MHz SPI Ports With 3-, 4-, and 5-Pin Options
- Two Inter-Integrated Circuit (I2C) Ports
- Real-Time Interrupt Counter/Watchdog
- Oscillator- and Software-Controlled PLL
- Applications:
  - Professional Audio
    - Mixers
    - Effects Boxes
    - Audio Synthesis
    - Instrument/Amp Modeling
    - Audio Conferencing
    - Audio Broadcast
    - Audio Encoder
  - Emerging Audio Applications
  - Biometrics
  - Medical
  - Industrial
- Military Temperature Range (–55°C to 125°C $T_{case}$)
- 256-Pin, 0.5-mm, Ceramic Quad Flatpack (CQFP) [HFH Suffix]

Please be aware that an important notice concerning availability, standard warranty, and use in critical applications of Texas Instruments semiconductor products and disclaimers thereto appears at the end of this data sheet.

C67x, TMS320C6000, C6000, DSP/BIOS, XDS, TMS320 are trademarks of Texas Instruments.
Philips is a registered trademark of Koninklijki Philips Electronics N.V.

PRODUCTION DATA information is current as of publication date. Products conform to specifications per the terms of the Texas Instruments standard warranty. Production processing does not necessarily include testing of all parameters.

Copyright © 2014, Texas Instruments Incorporated

## 1.2 Description

The SM320C6727B is the next generation of Texas Instruments' C67x generation of high-performance 32-/64-bit floating-point digital signal processors.

**Enhanced C67x+ CPU.** The C67x+ CPU is an enhanced version of the C67x CPU used on the C671x DSPs. It is compatible with the C67x CPU but offers significant improvements in speed, code density, and floating-point performance per clock cycle. The CPU natively supports 32-bit fixed-point, 32-bit single-precision floating-point, and 64-bit double-precision floating-point arithmetic.

**Efficient Memory System.** The memory controller maps the large on-chip 256K-byte RAM and 384K-byte ROM as unified program/data memory. Development is simplified since there is no fixed division between program and data memory size as on some other devices.

The memory controller supports single-cycle data accesses from the C67x+ CPU to the RAM and ROM. Up to three parallel accesses to the internal RAM and ROM from three of the following four sources are supported:

- Two 64-bit data accesses from the C67x+ CPU
- One 256-bit program fetch from the core and program cache
- One 32-bit data access from the peripheral system (either dMAX or UHPI)

The large (32K-byte) program cache translates to a high hit rate for most applications. This prevents most program/data access conflicts to the on-chip memory. It also enables effective program execution from an off-chip memory such as an SDRAM.

**High-Performance Crossbar Switch.** A high-performance crossbar switch acts as a central hub between the different bus masters (CPU, dMAX, UHPI) and different targets (peripherals and memory). The crossbar is partially connected; some connections are not supported (for example, UHPI-to-peripheral connections).

Multiple transfers occur in parallel through the crossbar as long as there is no conflict between bus masters for a particular target. When a conflict does occur, the arbitration is a simple and deterministic fixed-priority scheme.

The dMAX is given highest-priority since it is responsible for the most time-critical I/O transfers, followed next by the UHPI, and finally by the CPU.

**dMAX Dual Data Movement Accelerator.** The dMAX is a module designed to perform Data Movement Acceleration. The Data Movement Accelerator (dMAX) controller handles user-programmed data transfers between the internal data memory controller and the device peripherals on the C6727B DSPs. The dMAX allows movement of data to/from any addressable memory space including internal memory, peripherals, and external memory.

The dMAX controller includes features such as the capability to perform three-dimensional data transfers for advanced data sorting, and the capability to manage a section of the memory as a circular buffer/FIFO with delay-tap based reading and writing of data. The dMAX controller is capable of concurrently processing two transfer requests (provided that they are to/from different source/destinations).

**External Memory Interface (EMIF) for Flexibility and Expansion.** The external memory interface on the C6727B supports a single bank of SDRAM and a single bank of asynchronous memory. The EMIF data width is 16 bits wide.

SDRAM support includes x16 and x32 SDRAM devices with 1, 2, or 4 banks.

The C6727B extends SDRAM support to 256M-bit and 512M-bit devices.

Asynchronous memory support is typically used to boot from a parallel non-multiplexed NOR flash device that can be 8, 16, or 32 bits wide. Booting from larger flash devices than are natively supported by the dedicated EMIF address lines is accomplished by using general-purpose I/O pins for upper address lines.


Copyright © 2014, Texas Instruments Incorporated

The asynchronous memory interface can also be configured to support 8- or 16-bit-wide NAND flash. It includes a hardware ECC calculation (for single-bit errors) that can operate on blocks of data up to 512 bytes.

**Universal Host-Port Interface (UHPI) for High-Speed Parallel I/O.** The Universal Host-Port Interface (UHPI) is a parallel interface through which an external host CPU can access memories on the DSP. Three modes are supported by the C6727B UHPI:

- Multiplexed Address/Data - Half-Word (16-bit-wide) Mode (similar to C6713)
- Multiplexed Address/Data - Full Word (32-bit-wide) Mode
- Non-Multiplexed Mode - 16-bit Address and 32-bit Data Bus

The UHPI can also be restricted to accessing a single page (64K bytes) of memory anywhere in the address space of the C6727B; this page can be changed, but only by the C6727B CPU. This feature allows the UHPI to be used for high-speed data transfers even in systems where security is an important requirement.

The UHPI is only available on the C6727B.

**Multichannel Audio Serial Ports (McASP0, McASP1, and McASP2) - Up to 16 Stereo Channels I2S.** The multichannel audio serial port (McASP) seamlessly interfaces to CODECs, DACs, ADCs, and other devices. It supports the ubiquitous IIS format as well as many variations of this format, including time division multiplex (TDM) formats with up to 32 time slots.

Each McASP includes a transmit and receive section which may operate independently or synchronously; furthermore, each section includes its own flexible clock generator and extensive error-checking logic.

As data passes through the McASP, it can be realigned so that the fixed-point representation used by the application code can be independent of the representation used by the external devices without requiring any CPU overhead to make the conversion.

The McASP is a configurable module and supports between 2 and 16 serial data pins. It also has the option of supporting a Digital Interface Transmitter (DIT) mode with a full 384 bits of channel status and user data memory.

**Inter-Integrated Circuit Serial Ports (I2C0, I2C1).** The C6727B includes two inter-integrated circuit (I2C) serial ports. A typical application is to configure one I2C serial port as a slave to an external user-interface microcontroller. The other I2C serial port may then be used by the C6727B DSP to control external peripheral devices, such as a CODEC or network controller, which are functionally peripherals of the DSP device.

The two I2C serial ports are pin-multiplexed with the SPI0 serial port.

**Serial Peripheral Interface Ports (SPI0, SPI1).** As in the case of the I2C serial ports, the C6727B DSP also includes two serial peripheral interface (SPI) serial ports. This allows one SPI port to be configured as a slave to control the DSP while the other SPI serial port is used by the DSP to control external peripherals.

The SPI ports support a basic 3-pin mode as well as optional 4- and 5-pin modes. The optional pins include a slave chip-select pin and an enable pin which implements handshaking automatically in hardware for maximum SPI throughput.

The SPI0 port is pin-multiplexed with the two I2C serial ports (I2C0 and I2C1). The SPI1 serial port is pin-multiplexed with five of the serial data pins from McASP0 and McASP1.

**Real-Time Interrupt Timer (RTI).** The real-time interrupt timer module includes:

- Two 32-bit counter/prescaler pairs
- Two input captures (tied to McASP direct memory access [DMA] events for sample rate measurement)
- Four compares with automatic update capability
- Digital Watchdog (optional) for enhanced system robustness

Copyright © 2014, Texas Instruments Incorporated

**Clock Generation (PLL and OSC).** The C6727B DSP includes an on-chip oscillator that supports crystals in the range of 12 MHz to 25 MHz. Alternatively, the clock can be provided externally through the CLKIN pin.

The DSP includes a flexible, software-programmable phase-locked loop (PLL) clock generator. Three different clock domains (SYSCLK1, SYSCLK2, and SYSCLK3) are generated by dividing down the PLL output. SYSCLK1 is the clock used by the CPU, memory controller, and memories. SYSCLK2 is used by the peripheral subsystem and dMAX. SYSCLK3 is used exclusively for the EMIF.

### *1.2.1 Device Compatibility*

The SM320C6727B floating-point digital signal processor is based on the new C67x+ CPU. This core is code-compatible with the C67x CPU core used on the TMS320C671x DSPs, but with significant enhancements including additional floating-point instructions. See Section 2.2


Copyright © 2014, Texas Instruments Incorporated

## 1.3 Functional Block Diagram

Figure 1-1 shows the functional block diagram of the C6727B device.

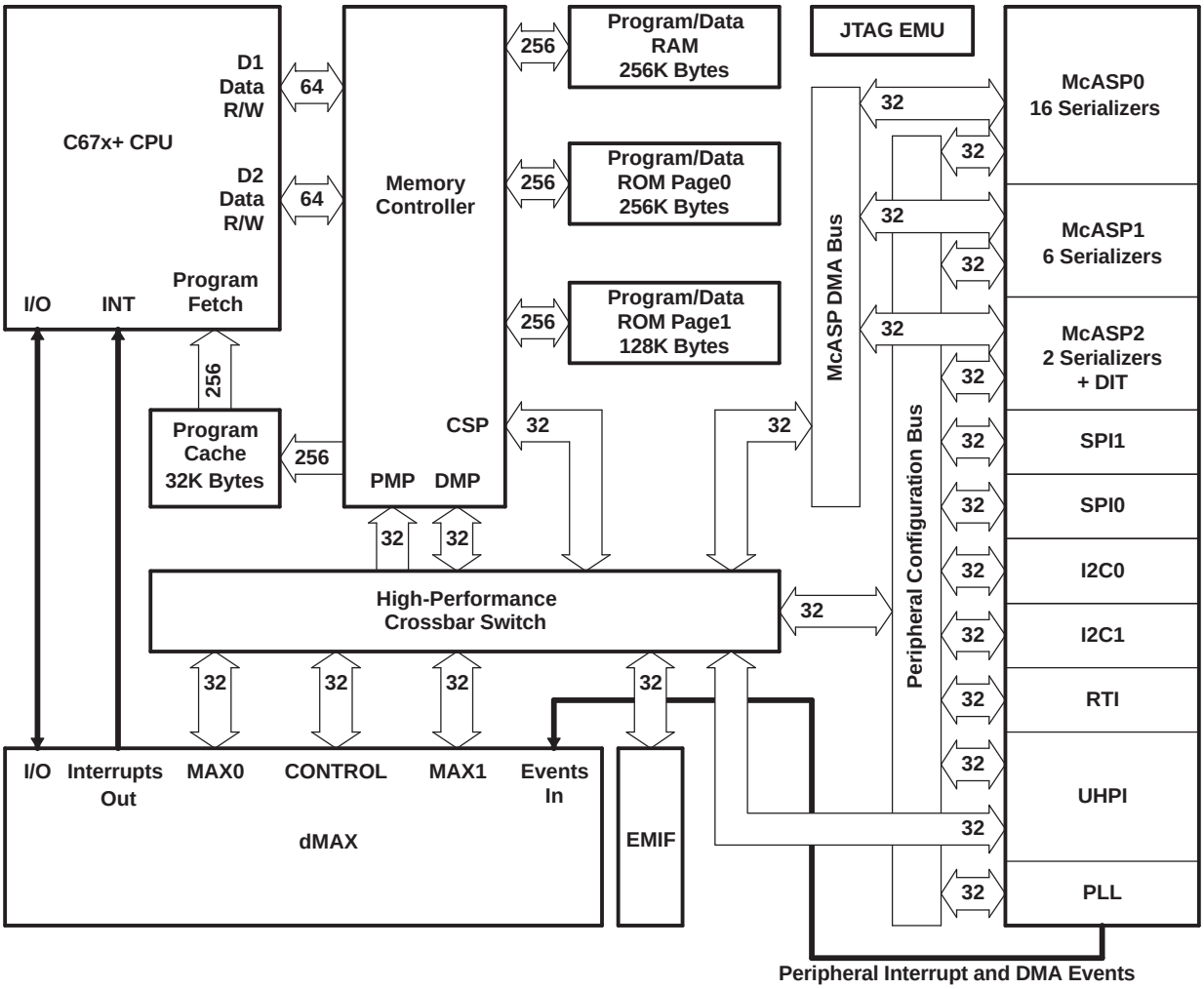


**Figure 1-1. C6727B DSP Block Diagram**

**1 Floating-Point Digital Signal Processor ..... 1**
1.1 Features ..... 1
1.2 Description ..... 2
1.3 Functional Block Diagram ..... 5
**2 Device Overview ..... 7**
2.1 Device Characteristics ..... 7
2.2 Enhanced C67x+ CPU ..... 7
2.3 CPU Interrupt Assignments ..... 9
2.4 Internal Program/Data ROM and RAM ..... 10
2.5 Program Cache ..... 11
2.6 High-Performance Crossbar Switch ..... 13
2.7 Memory Map Summary ..... 16
2.8 Boot Modes ..... 17
2.9 Pin Assignments ..... 20
2.10 Development ..... 26
**3 Device Configurations ..... 30**
3.1 Device Configuration Registers ..... 30
3.2 Peripheral Pin Multiplexing Options ..... 30
3.3 Peripheral Pin Multiplexing Control ..... 31
**4 Peripheral and Electrical Specifications ..... 33**
4.1 Electrical Specifications ..... 33
4.2 Absolute Maximum Ratings ..... 33
4.3 Recommended Operating Conditions ..... 34
4.4 Electrical Characteristics ..... 34
4.5 Parameter Information ..... 35
4.6 Timing Parameter Symbology ..... 36
4.7 Power Supplies ..... 37
4.8 Reset ..... 38
4.9 Dual Data Movement Accelerator (dMAX) ..... 39
4.10 External Interrupts ..... 44
4.11 External Memory Interface (EMIF) ..... 45
4.12 Universal Host-Port Interface (UHPI) [C6727B Only] ..... 55
4.13 Multichannel Audio Serial Ports (McASP0, McASP1, and McASP2) ..... 68
4.14 Serial Peripheral Interface Ports (SPI0, SPI1) ..... 80
4.15 Inter-Integrated Circuit Serial Ports (I2C0, I2C1) ..... 93
4.16 Real-Time Interrupt (RTI) Timer With Digital Watchdog ..... 98
4.17 External Clock Input From Oscillator or CLKIN Pin ..... 101
4.18 Phase-Locked Loop (PLL) ..... 103
**5 Application Example ..... 106**
**6 Mechanical Data ..... 107**
6.1 Package Thermal Resistance Characteristics ..... 107


Copyright © 2014, Texas Instruments Incorporated

# 2 Device Overview

## 2.1 Device Characteristics

Table 2-1 provides an overview of the C6727B DSPs. The table shows significant features of each device, including the capacity of on-chip memory, the peripherals, the execution time, and the package type with pin count.

**Table 2-1. Characteristics of the C6727B Processors**

| HARDWARE FEATURES | | |
|---|---|---|
| Peripherals<br>Not all peripheral pins are available at the same time. (For more details, see the Device Configurations section.) | dMAX | 1 |
| | EMIF | 1 (32-bit) |
| | UHPI | 1 |
| | McASP | 3 |
| | SPI | 2 |
| | I2C | 2 |
| | RTI | 1 |
| On-Chip Memory | Size (KB) | 32KB Program Cache<br>256KB RAM<br>384KB ROM |
| CPU ID + CPU Rev ID | Control Status Register (CSR.[31:16]) | 0x0300 |
| Frequency | MHz | 250 |
| Cycle Time | ns | 4 ns |
| EMIF Frequency | MHz | 133 |
| Voltage | Core (V) | 1.4 V (C6727B-350)<br>1.2 V (C6727B-300) (C6727B-275) (C6727B**A**-250) |
| | I/O (V) | 3.3 V |
| Clock Generator Options | Prescaler | /1, /2, /3, ..., /32 |
| | Multiplier | x4, x5, x6, ..., x25 |
| | Postscaler | /1, /2, /3, ..., /32 |
| Package (see Section 6) | 36 x 36 mm | 256-Pin CQFP (HFH) |
| Process Technology | µm | 0.13 µm |
| Product Status | Product Preview (PP), Advance Information (AI), or Production Data (PD) | PD(1) |

(1) PRODUCTION DATA information is current as of publication date. Products conform to specifications per the terms of Texas Instruments standard warranty. Production processing does not necessarily include testing of all parameters.

## 2.2 Enhanced C67x+ CPU

The SM320C6727B floating-point digital signal processors are based on the new C67x+ CPU. This core is code-compatible with the C67x CPU core used on the TMS320C671x DSPs, but with significant enhancements including an increase in core operating frequency of 250 MHz while operating at 1.2 V.

The CPU fetches 256-bit-wide advanced very-long instruction word (VLIW) fetch packets that are composed of variable-length execute packets. The execute packets can supply from one to eight 32-bit instructions to the eight functional units during every clock cycle. The variable-length execute packets are a key memory-saving feature, distinguishing the C67x CPU from other VLIW architectures. Additionally, execute packets can now span fetch packets, providing a code size improvement over the C67x CPU core.

Copyright © 2014, Texas Instruments Incorporated

The CPU features two data paths, shown in Figure 2-1, each composed of four functional units (.D, .M, .S, and .L) and a register file. The .D unit in each data path is a data-addressing unit that is responsible for all data transfers between the register files and the memory. The .M functional units are dedicated for multiplies, and the .S and .L functional units perform a general set of arithmetic, logical, and branch functions. All instructions operate on registers as opposed to data in memory, but results stored in the 32-bit registers can be subsequently moved to memory as bytes, half-words, or words.

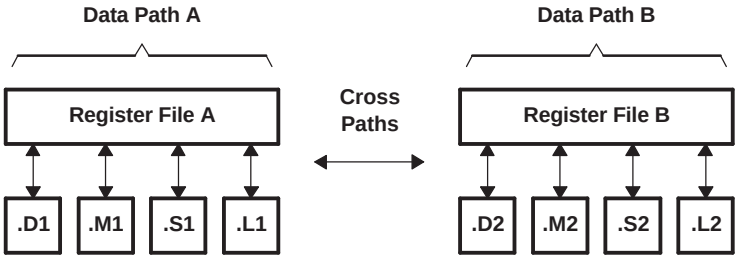


**Figure 2-1. CPU Data Paths**

The register file in each data path contains 32 32-bit registers for a total of 64 general-purpose registers. This doubles the number of registers found on the C67x CPU core, allowing the optimizing C compiler to pipeline more complex loops by decreasing register pressure significantly.

The four functional units in each data path of the CPU can freely share the 32 registers belonging to that data path. Each data path also features a single cross path connected to the register file on the opposing data path. This allows each data path to source one cross-path operand per cycle from the opposing register file. On the C67x+ CPU, this single cross-path operand can be used by two functional units per cycle, an improvement over the C67x CPU in which only one functional unit could use the cross-path operand. In addition, the cross-path register read(s) are not counted as part of the limit of four reads of the same register in a single cycle.

The C67x+ CPU executes all C67x instructions plus new floating-point instructions to improve performance specifically during audio processing. These new instructions are listed in Table 2-2.


Copyright © 2014, Texas Instruments Incorporated

**Table 2-2. New Floating-Point Instructions for C67x+ CPU**

| INSTRUCTION | FLOATING-POINT OPERATION(1) | IMPROVES |
|---|---|---|
| MPYSPDP | SP x DP → DP | Faster than MPYDP.<br>Improves high Q biquads (bass management) and FFT. |
| MPYSP2DP | SP x SP → DP | Faster than MPYDP.<br>Improves Long FIRs (EQ). |
| ADDSP (new to CPU “S” Unit) | SP + SP → SP | Now up to four floating-point add and subtract operations in parallel.<br>Improves FFT performance and symmetric FIR. |
| ADDDP (new to CPU “S” Unit) | DP + DP → DP | |
| SUBSP (new to CPU “S” Unit) | SP – SP → SP | |
| SUBDP (new to CPU “S” Unit) | DP – DP → DP | |

(1) SP means IEEE Single-Precision (32-bit) operations and DP means IEEE Double-Precision (64-bit) operations.

Finally, two new registers, which are dedicated to communication with the dMAX unit, have been added to the C67x+ CPU. These registers are the dMAX Event Trigger Register (DETR) and the dMAX Event Status Register (DESR). They allow the CPU and dMAX to communicate without requiring any accesses to the memory system.

## 2.3 CPU Interrupt Assignments

Table 2-3 lists the interrupt channel assignments on the C6727B device. If more than one source is listed, the interrupt channel is shared and an interrupt on this channel could have come from any of the enabled peripherals on that channel.

The dMAX peripheral has two CPU interrupts dedicated to reporting FIFO status (INT7) and transfer completion (INT8). In addition, the dMAX can generate interrupts to the CPU on lines INT9–13 and INT15 in response to peripheral events. To enable this functionality, the associated Event Entry within the dMAX can be programmed so that a CPU interrupt is generated when the peripheral event is received.

**Table 2-3. CPU Interrupt Assignments**

| CPU INTERRUPT | INTERRUPT SOURCE |
|---|---|
| INT0 | RESET |
| INT1 | NMI (From dMAX or EMIF Interrupt) |
| INT2 | Reserved |
| INT3 | Reserved |
| INT4 | RTI Interrupt 0 |
| INT5 | RTI Interrupts 1, 2, 3, and RTI Overflow Interrupts 0 and 1. |
| INT6 | UHPI CPU Interrupt (from External Host MCU) |
| INT7 | FIFO status notification from dMAX |
| INT8 | Transfer completion notification from dMAX |
| INT9 | dMAX event (0x2 specified in the dMAX interrupt event entry) |
| INT10 | dMAX event (0x3 specified in the dMAX interrupt event entry) |
| INT11 | dMAX event (0x4 specified in the dMAX interrupt event entry) |
| INT12 | dMAX event (0x5 specified in the dMAX interrupt event entry) |
| INT13 | dMAX event (0x6 specified in the dMAX interrupt event entry) |
| INT14 | I2C0, I2C1, SPI0, SPI1 Interrupts |
| INT15 | dMAX event (0x7 specified in the dMAX interrupt event entry) |

Copyright © 2014, Texas Instruments Incorporated

## 2.4 Internal Program/Data ROM and RAM

The organization of program/data ROM and RAM on C6727B is simple and efficient. ROM is organized as two 256-bit-wide pages with four 64-bit-wide banks. RAM is organized as a single 256-bit-wide page with eight 32-bit-wide banks.

The internal memory organization is illustrated in Figure 2-2 (ROM) and Figure 2-3 (RAM).

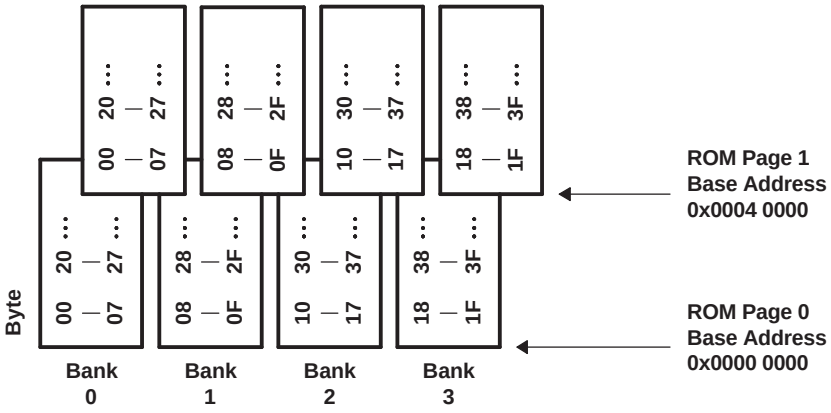


**Figure 2-2. Program/Data ROM Organization**

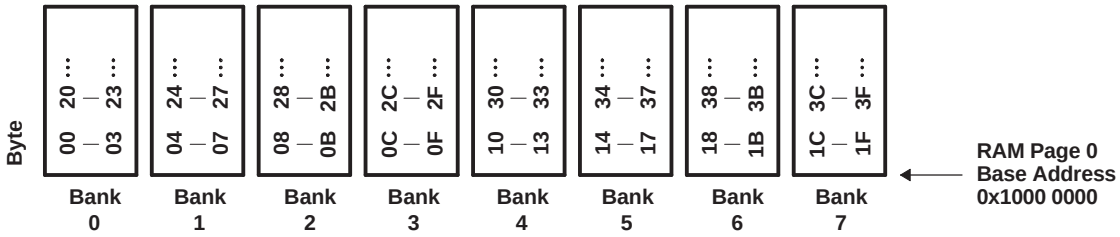


**Figure 2-3. Program/Data RAM Organization**

The C6727B memory controller supports up to three parallel accesses to the internal RAM and ROM from three of the following four sources as long as there are no bank conflicts:

- Two 64-bit data accesses from the C67x+ CPU
- One 256-bit-wide program fetch from the program cache
- One 32-bit data access from the peripheral system (either dMAX or UHPI)

A program cache miss is 256 bits wide and conflicts only with data accesses to the same page. Multiple data accesses to different pages, or to the same page but different banks will occur without conflict.

The organization of the C6727B internal memory system into multiple pages (3 total) and a large number of banks (16 total) means that it is straightforward to optimize DSP code to avoid data conflicts. Several factors, including the large program cache and the partitioning of the memory system into multiple pages, minimize the number of program versus data conflicts.

The result is an efficient memory system which allows easy tuning towards the maximum possible CPU performance.

The C6727B ROM consists of a software bootloader plus additional software.


Copyright © 2014, Texas Instruments Incorporated

## 2.5 Program Cache

The C6727B DSP executes code directly from a large on-chip 32K-byte program cache. The program cache has these key features:

- Wide 256-bit path to internal ROM/RAM
- Single-cycle access on cache hits
- 2-cycle miss penalty to internal ROM/RAM
- Caches external memory as well as ROM/RAM
- Direct-mapped
- Modes: Enable, Freeze, Bypass
- Software invalidate to support code overlay

The program cache line size is 256 bits wide and is matched with a 256-bit-wide path between cache and internal memory. This allows the program cache to fill an entire line (corresponding to eight C67x+ CPU instructions) with only a single miss penalty of 2 cycles.

The program cache control registers are listed in Table 2-4.

**Table 2-4. Program Cache Control Registers**

| REGISTER NAME | BYTE ADDRESS | DESCRIPTION |
|---|---|---|
| L1PISAR | 0x2000 0000 | L1P Invalidate Start Address |
| L1PICR | 0x2000 0004 | L1P Invalidate Control Register |

**CAUTION**

Any application which modifies the contents of program RAM (for example, a program overlay) must invalidate the addresses from program cache to maintain coherency by explicitly writing to the L1PISAR and L1PICR registers.

The Cache Mode (Enable, Freeze, Bypass) is configured through a CPU internal register (CSR, bits 7:5). These options are listed in Table 2-5. Typically, only the Cache Enable Mode is used. But advanced users may utilize Freeze and Bypass modes to tune performance.

**Table 2-5. Cache Modes Set Through PCC Field of CSR CPU Register on C6727B**

| CPU CSR[7:5] | CACHE MODE |
|---|---|
| 000b | Enable (Deprecated - Means direct mapped RAM on some C6000 devices) |
| 010b | Enable - Cache is enabled, cache misses cause a line fill. |
| 011b | Freeze - Cache is enabled, but contents are unchanged by misses. |
| 100b | Bypass - Forces cache misses, cache contents frozen. |
| Other Values | Reserved - Not Supported |

Copyright © 2014, Texas Instruments Incorporated

**CAUTION**

Although the reset value of CSR[7:5] (PCC field) is 000b, the value may be modified during the boot process by the ROM code. Refer to the appropriate ROM data sheet for more details. However, note that the cache may be **disabled** when control is actually passed to application code. Therefore, it may be necessary to write '010b' to the PCC field to explicitly enable the cache at the start of application code.

**CAUTION**

Changing the cache mode through CSR[7:5] does not invalidate any lines already in the cache. To invalidate the cache after modifications are made to program space, the control registers L1PISAR and L1PICR must be used.


Copyright © 2014, Texas Instruments Incorporated

## 2.6 High-Performance Crossbar Switch

The C6727B DSP includes a high-performance crossbar switch that acts as a central hub between bus masters and targets. Figure 2-4 illustrates the connectivity of the crossbar switch.

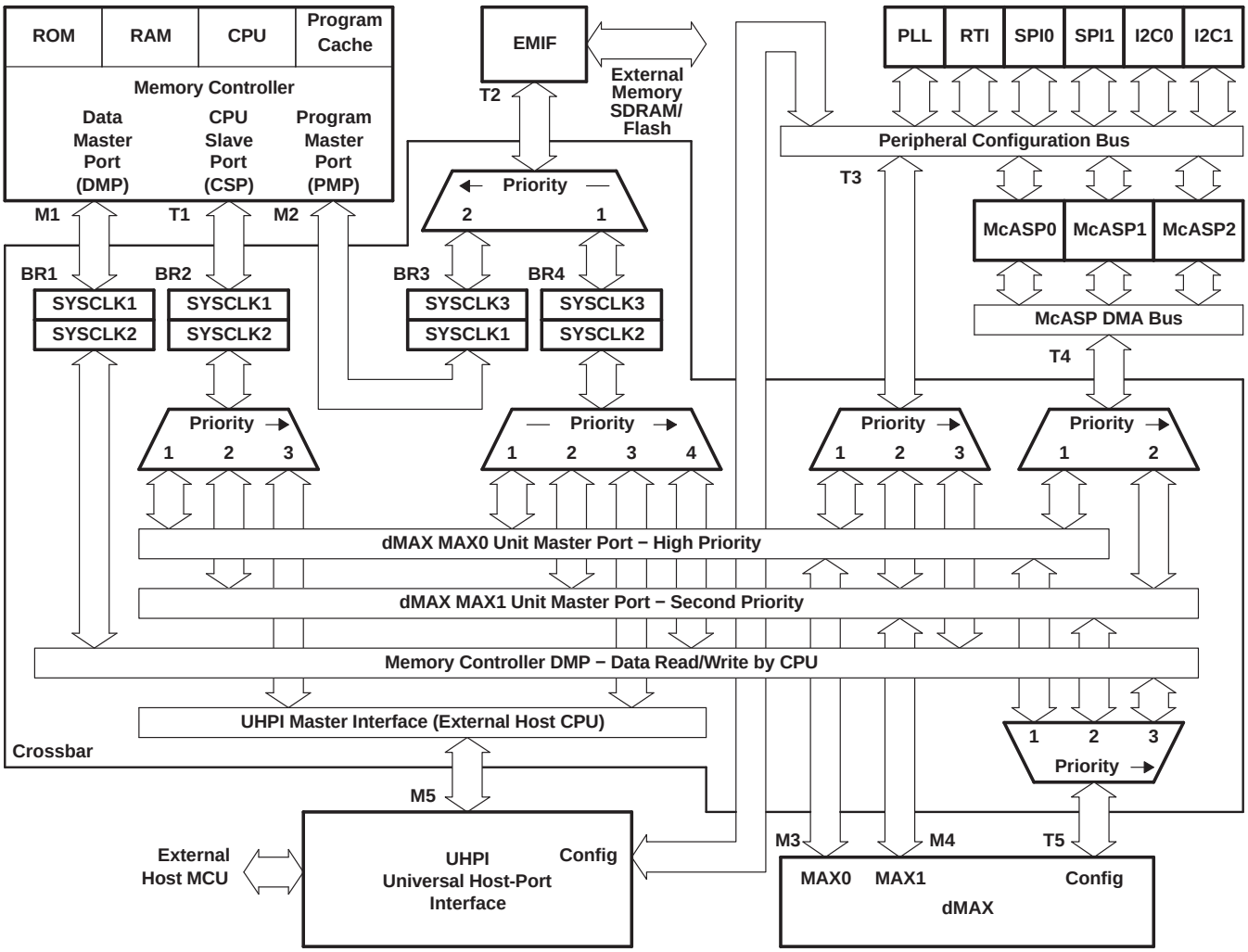


**Figure 2-4. Block Diagram of Crossbar Switch**

As shown in Figure 2-4, there are five bus masters:

| | |
|---|---|
| M1 | Memory controller DMP for CPU data accesses to peripherals and EMIF. |
| M2 | Memory controller PMP for program cache fills from the EMIF. |
| M3 | dMAX HiMAX master port for high-priority DMA accesses. |
| M4 | dMAX LoMAX master port for lower-priority DMA accesses. |
| M5 | UHPI master port for an external MCU to access on-chip and off-chip memories. |

Copyright © 2014, Texas Instruments Incorporated

The five bus masters arbitrate for five different target groups:

| | |
|---|---|
| T1 | On-chip memories through the CPU Slave Port (CSP). |
| T2 | Memories on the external memory interface (EMIF). |
| T3 | Peripheral registers through the peripheral configuration bus. |
| T4 | McASP serializers through the dedicated McASP DMA bus. |
| T5 | dMAX registers. |

The crossbar switch supports parallel accesses from different bus masters to different targets. When two or more bus masters contend for the same target beginning at the same cycle, then the highest-priority master is given ownership of the target while the other master(s) are stalled. However, once ownership of the target is given to a bus master, it is allowed to complete its access before ownership is arbitrated again. Following are two examples.

**Example 1:** Simultaneous accesses without conflict

- dMAX HiMAX accesses McASP Data Port for transfer of audio data.
- dMAX LoMAX accesses SPI port for control processing.
- UHPI accesses internal RAM through the CSP.
- CPU fills program cache from EMIF.

**Example 2:** Conflict over a shared resource

- dMAX HiMAX accesses RTI port for McASP sample rate measurement.
- dMAX LoMAX accesses SPI port for control processing.

In Example 2, both masters contend for the same target, the peripheral configuration bus. The HiMAX access will be given priority over the LoMAX access.

The master priority is illustrated in Figure 2-4 by the numbers 1 through 4 in the bus arbiter symbols. Note that the EMIF arbitration is distributed so that only one bridge crossing is necessary for PMP accesses. The effect is that PMP has 5th priority to the EMIF but lower latency.

A bus bridge is needed between masters and targets which run at different clock rates. The bus bridge contains a small FIFO to allow the bridge to accept an incoming (burst) access at one clock rate and pass it through the bridge to a target running at a different rate. Table 2-6 lists the FIFO properties of the four bridges (BR1, BR2, BR3, and BR4) in Figure 2-4.

**Table 2-6. Bus Bridges**

| LABEL | BRIDGE DESCRIPTION | MASTER CLOCK | TARGET CLOCK |
|---|---|---|---|
| BR1 | DMP Bridge to peripherals, dMAX, EMIF | SYSCLK1 | SYSCLK2 |
| BR2 | dMAX, UHPI to ROM/RAM (CSP) | SYSCLK2 | SYSCLK1 |
| BR3 | PMP to EMIF | SYSCLK1 | SYSCLK3 |
| BR4 | CPU, UHPI, and dMAX to EMIF | SYSCLK2 | SYSCLK3 |


Copyright © 2014, Texas Instruments Incorporated

Figure 2-5 shows the bit layout of the device-level bridge control register (CFGBRIDGE) and Table 2-7 contains a description of the bits.

| 31 | 16 |
|---|---|
| Reserved | |

| 15 | 1 | 0 |
|---|---|---|
| Reserved | | CSPRST |
| | | R/W, 1 |

LEGEND: R/W = Read/Write; R = Read only; -*n* = value after reset

**Figure 2-5. CFGBRIDGE Register Bit Layout (0x4000 0024)**

**Table 2-7. CFGBRIDGE Register Bit Field Description (0x4000 0024)**

| BIT NO. | NAME | RESET VALUE | READ WRITE | DESCRIPTION |
|---|---|---|---|---|
| 31:1 | Reserved | N/A | N/A | Reads are indeterminate. Only 0s should be written to these bits. |
| 0 | CSPRST | 1 | R/W | Resets the CSP Bridge (BR2 in Figure 2-4).<br>1 = Bridge Reset Asserted<br>0 = Bridge Reset Released |

**CAUTION**

The CSPRST bit must be asserted after any change to the PLL that affects SYSCLK1 and SYSCLK2 and must be released before any accesses to the CSP bridge occur from either the dMAX or the UHPI.

Copyright © 2014, Texas Instruments Incorporated

## 2.7 Memory Map Summary

A high-level memory map of the C6727B DSP appears in Table 2-8. The base address of each region is listed. ***Any address past the end address must not be read or written.*** The table also lists whether the regions are word-addressable or byte- and word-addressable.

**Table 2-8. C6727B Memory Map**

| DESCRIPTION | BASE ADDRESS | END ADDRESS | BYTE- OR WORD-ADDRESSABLE |
|---|---|---|---|
| Internal ROM Page 0 (256K Bytes) | 0x0000 0000 | 0x0003 FFFF | Byte and Word |
| Internal ROM Page 1 (128K Bytes) | 0x0004 0000 | 0x0005 FFFF | Byte and Word |
| Internal RAM Page 0 (256K Bytes) | 0x1000 0000 | 0x1003 FFFF | Byte and Word |
| Memory and Cache Control Registers | 0x2000 0000 | 0x2000 001F | Word Only |
| Emulation Control Registers (Do Not Access) | 0x3000 0000 | 0x3FFF FFFF | Word Only |
| Device Configuration Registers | 0x4000 0000 | 0x4000 0083 | Word Only |
| PLL Control Registers | 0x4100 0000 | 0x4100 015F | Word Only |
| Real-time Interrupt (RTI) Control Registers | 0x4200 0000 | 0x4200 00A3 | Word Only |
| Universal Host-Port Interface (UHPI) Registers | 0x4300 0000 | 0x4300 0043 | Word Only |
| McASP0 Control Registers | 0x4400 0000 | 0x4400 02BF | Word Only |
| McASP1 Control Registers | 0x4500 0000 | 0x4500 02BF | Word Only |
| McASP2 Control Registers | 0x4600 0000 | 0x4600 02BF | Word Only |
| SPI0 Control Registers | 0x4700 0000 | 0x4700 007F | Word Only |
| SPI1 Control Registers | 0x4800 0000 | 0x4800 007F | Word Only |
| I2C0 Control Registers | 0x4900 0000 | 0x4900 007F | Word Only |
| I2C1 Control Registers | 0x4A00 0000 | 0x4A00 007F | Word Only |
| McASP0 DMA Port (any address in this range) | 0x5400 0000 | 0x54FF FFFF | Word Only |
| McASP1 DMA Port (any address in this range) | 0x5500 0000 | 0x55FF FFFF | Word Only |
| McASP2 DMA Port (any address in this range) | 0x5600 0000 | 0x56FF FFFF | Word Only |
| dMAX Control Registers | 0x6000 0000 | 0x6000 008F | Word Only |
| MAX0 (HiMAX) Event Entry Table | 0x6100 8000 | 0x6100 807F | Byte and Word |
| Reserved | 0x6100 8080 | 0x6100 809F | |
| MAX0 (HiMAX) Transfer Entry Table | 0x6100 80A0 | 0x6100 81FF | Byte and Word |
| MAX1 (LoMAX) Event Entry Table | 0x6200 8000 | 0x6200 807F | Byte and Word |
| Reserved | 0x6200 8080 | 0x6200 809F | |
| MAX1 (LoMAX) Transfer Entry Table | 0x6200 80A0 | 0x6200 81FF | Byte and Word |
| External SDRAM space on EMIF | 0x8000 0000 | 0x8FFF FFFF | Byte and Word |
| External Asynchronous / Flash space on EMIF | 0x9000 0000 | 0x9FFF FFFF | Byte and Word |
| EMIF Control Registers | 0xF000 0000 | 0xF000 00BF | Word Only(1) |

(1) The upper byte of the EMIF's SDRAM Configuration Register (SDCR[31:24]) is byte-addressable to support placing the EMIF into the Self-Refresh State without triggering the SDRAM Initialization Sequence.


Copyright © 2014, Texas Instruments Incorporated

## 2.8 Boot Modes

The C6727B DSP supports only one hardware bootmode option, this is to boot from the internal ROM starting at address 0x0000 0000. Other bootmode options are implemented by a software bootloader stored in ROM. The software bootloader uses the CFGPIN0 and CFGPIN1 registers, which capture the state of various device pins at reset, to determine which mode to enter. Note that in practice, only a few pins are used by the software.

**CAUTION**

Only an externally applied $\overline{\text{RESET}}$ causes the CFGPIN0 and CFGPIN1 registers to recapture their associated pin values. Neither an emulator reset nor a RTI reset causes these registers to update.

The ROM bootmodes include:

- Parallel Flash on $\overline{\text{EM_CS}}$[2]
- SPI0 or I2C1 master mode from serial EEPROM
- SPI0 or I2C1 slave mode from external MCU
- UHPI from an external MCU

Table 2-9 describes the required boot pin settings at device reset for each bootmode.

**Table 2-9. Required Boot Pin Settings at Device Reset**

| BOOT MODE | $\overline{\text{UHPI_HCS}}$ | SPI0_SOMI | SPI0_SIMO | SPI0_CLK |
|---|---|---|---|---|
| UHPI | 0 | BYTEAD(1) | FULL(1) | NMUX(1) |
| Parallel Flash | 1 | 0 | 1 | 0 |
| SPI0 Master | 1 | 0 | 0 | 1 |
| SPI0 Slave | 1 | 0 | 1 | 1 |
| I2C1 Master | 1 | 1 | 0 | 1 |
| I2C1 Slave | 1 | 1 | 1 | 1 |

(1) When $\overline{\text{UHPI_HCS}}$ is 0, the state of the SPI0_SOMI, SPI0_SIMO, and SPI0_CLK pins is copied into the specified bits in the CFGHPI register described in Table 4-14.

Copyright © 2014, Texas Instruments Incorporated

Figure 2-6 shows the bit layout of the CFGPIN0 register and Table 2-10 contains a description of the bits.

| 31 | | | | | | | 8 |
|---|---|---|---|---|---|---|---|
| Reserved | | | | | | | |
| **7** | **6** | **5** | **4** | **3** | **2** | **1** | **0** |
| PINCAP7 | PINCAP6 | PINCAP5 | PINCAP4 | PINCAP3 | PINCAP2 | PINCAP1 | PINCAP0 |

LEGEND: R/W = Read/Write; R = Read only; -*n* = value after reset

**Figure 2-6. CFGPIN0 Register Bit Layout (0x4000 0000)**

**Table 2-10. CFGPIN0 Register Bit Field Description (0x4000 0000)**

| BIT NO. | NAME | DESCRIPTION |
|---|---|---|
| 31:8 | Reserved | Reads are indeterminate. Only 0s should be written to these bits. |
| 7 | PINCAP7 | SPI0_SOMI/I2C0_SDA pin state captured on rising edge of $\overline{\text{RESET}}$ pin. |
| 6 | PINCAP6 | SPI0_SIMO pin state captured on rising edge of $\overline{\text{RESET}}$ pin. |
| 5 | PINCAP5 | SPI0_CLK/I2C0_SCL pin state captured on rising edge of $\overline{\text{RESET}}$ pin. |
| 4 | PINCAP4 | $\overline{\text{SPI0_SCS}}$/I2C1_SCL pin state captured on rising edge of $\overline{\text{RESET}}$ pin. |
| 3 | PINCAP3 | $\overline{\text{SPI0_ENA}}$/I2C1_SDA pin state captured on rising edge of $\overline{\text{RESET}}$ pin. |
| 2 | PINCAP2 | AXR0[8]/AXR1[5]/SPI1_SOMI pin state captured on rising edge of $\overline{\text{RESET}}$ pin. |
| 1 | PINCAP1 | AXR0[9]/AXR1[4]/SPI1_SIMO pin state captured on rising edge of $\overline{\text{RESET}}$ pin. |
| 0 | PINCAP0 | AXR0[7]/SPI1_CLK pin state captured on rising edge of $\overline{\text{RESET}}$ pin. |


Copyright © 2014, Texas Instruments Incorporated

Figure 2-7 shows the bit layout of the CFGPIN1 register and Table 2-11 contains a description of the bits.

| 31 | | | | | | | 8 |
|---|---|---|---|---|---|---|---|
| Reserved | | | | | | | |
| **7** | **6** | **5** | **4** | **3** | **2** | **1** | **0** |
| PINCAP15 | PINCAP14 | PINCAP13 | PINCAP12 | PINCAP11 | PINCAP10 | PINCAP9 | PINCAP8 |

LEGEND: R/W = Read/Write; R = Read only; -*n* = value after reset

**Figure 2-7. CFGPIN1 Register Bit Layout (0x4000 0004)**

**Table 2-11. CFGPIN1 Register Bit Field Description (0x4000 0004)**

| BIT NO. | NAME | DESCRIPTION |
|---|---|---|
| 31:8 | Reserved | Reads are indeterminate. Only 0s should be written to these bits. |
| 7 | PINCAP15 | AXR0[5]/$\overline{\text{SPI1_SCS}}$ pin state captured on rising edge of $\overline{\text{RESET}}$ pin. |
| 6 | PINCAP14 | AXR0[6]/$\overline{\text{SPI1_ENA}}$ pin state captured on rising edge of $\overline{\text{RESET}}$ pin. |
| 5 | PINCAP13 | $\overline{\text{UHPI_HCS}}$ pin state captured on rising edge of $\overline{\text{RESET}}$ pin. |
| 4 | PINCAP12 | UHPI_HD[0] pin state captured on rising edge of $\overline{\text{RESET}}$ pin. |
| 3 | PINCAP11 | EM_D[16]/UHPI_HA[0] pin state captured on rising edge of $\overline{\text{RESET}}$ pin. |
| 2 | PINCAP10 | AFSX0 pin state captured on rising edge of $\overline{\text{RESET}}$ pin. |
| 1 | PINCAP9 | AFSR0 pin state captured on rising edge of $\overline{\text{RESET}}$ pin. |
| 0 | PINCAP8 | AXR0[0] pin state captured on rising edge of $\overline{\text{RESET}}$ pin. |

Copyright © 2014, Texas Instruments Incorporated

## 2.9 Pin Assignments

### 2.9.1 Pin Maps

Figure 2-8 shows the pin assignments on the 256-pin HFH package.

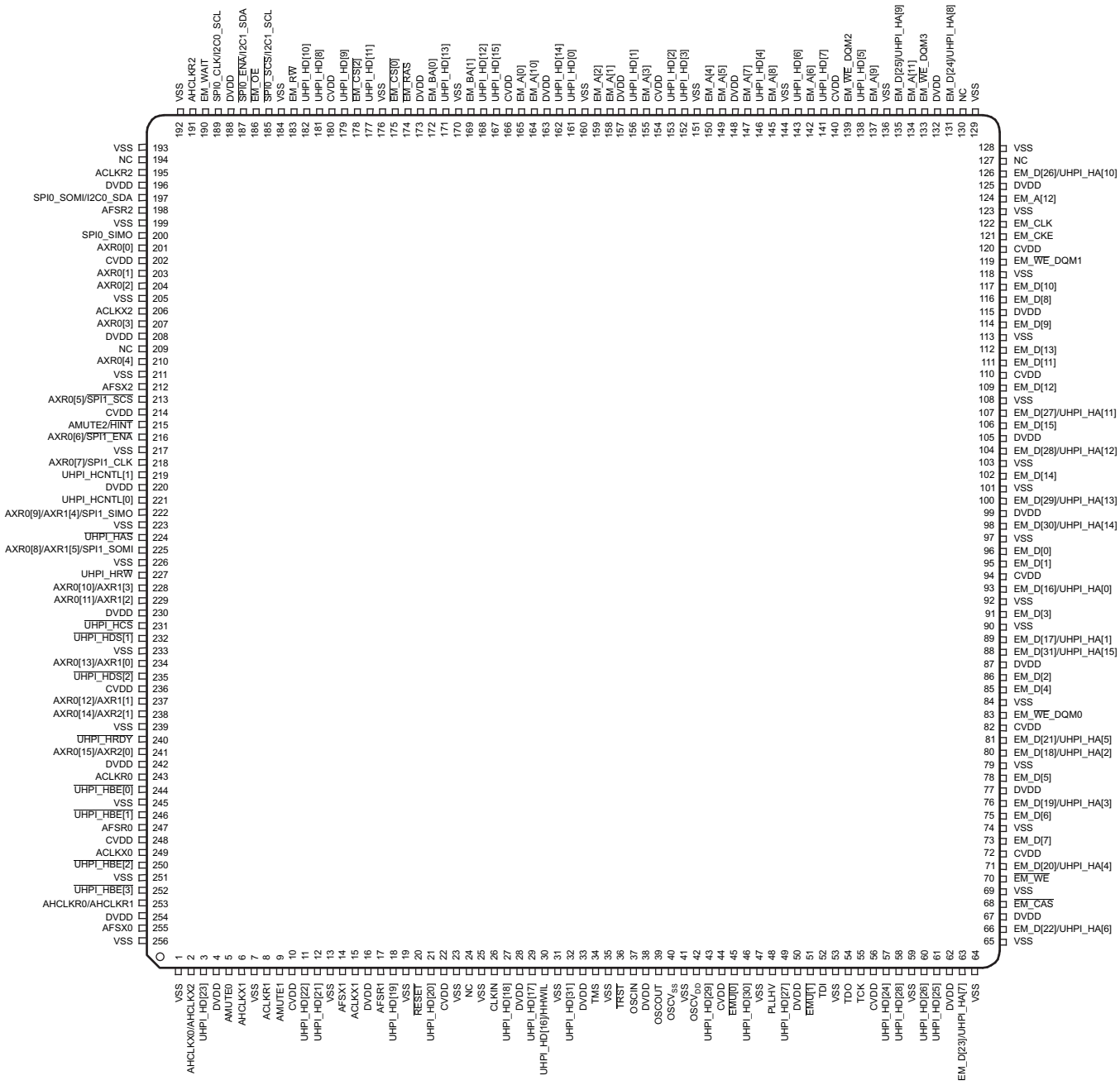


**Figure 2-8. 256-Pin Ceramic Quad Flatpack (HFH Suffix)—Top View**


Copyright © 2014, Texas Instruments Incorporated

### 2.9.2 Terminal Functions

Table 2-12, the Terminal Functions table, identifies the external signal names, the associated pin/ball numbers along with the mechanical package designator, the pin type (I, O, IO, OZ, or PWR), whether the pin/ball has any internal pullup/pulldown resistors, whether the pin/ball is configurable as an IO in GPIO mode, and a functional pin description.

**Table 2-12. Terminal Functions**

| SIGNAL NAME | HFH | TYPE(1) | PULL(2) | GPIO(3) | DESCRIPTION |
|---|---|---|---|---|---|
| **External Memory Interface (EMIF) Address and Control** | | | | | |
| EM_A[0] | 165 | O | - | N | EMIF Address Bus |
| EM_A[1] | 158 | O | - | N | |
| EM_A[2] | 159 | O | - | N | |
| EM_A[3] | 155 | O | - | N | |
| EM_A[4] | 150 | O | - | N | |
| EM_A[5] | 149 | O | - | N | |
| EM_A[6] | 142 | O | - | N | |
| EM_A[7] | 147 | O | - | N | |
| EM_A[8] | 145 | O | - | N | |
| EM_A[9] | 137 | O | - | N | |
| EM_A[10] | 164 | O | - | N | |
| EM_A[11] | 134 | O | - | N | |
| EM_A[12] | 124 | O | IPD | N | |
| EM_BA[0] | 172 | O | - | N | SDRAM Bank Address and Asynchronous Memory Low-Order Address |
| EM_BA[1] | 169 | O | - | N | |
| $\overline{\text{EM_CS[0]}}$ | 175 | O | - | N | SDRAM Chip Select |
| $\overline{\text{EM_CS[2]}}$ | 178 | O | - | N | Asynchronous Memory Chip Select |
| $\overline{\text{EM_CAS}}$ | 68 | O | - | N | SDRAM Column Address Strobe |
| $\overline{\text{EM_RAS}}$ | 174 | O | - | N | SDRAM Row Address Strobe |
| $\overline{\text{EM_WE}}$ | 70 | O | - | N | SDRAM/Asynchronous Write Enable |
| EM_CKE | 121 | O | - | N | SDRAM Clock Enable |
| EM_CLK | 122 | O | - | N | EMIF Output Clock |
| EM_$\overline{\text{WE}}$_DQM0 | 83 | O | - | N | Write Enable or Byte Enable for EM_D[7:0] |
| EM_$\overline{\text{WE}}$_DQM1 | 119 | O | - | N | Write Enable or Byte Enable for EM_D[15:8] |
| EM_$\overline{\text{WE}}$_DQM2 | 139 | O | IPU | N | Write Enable or Byte Enable for EM_D[23:16] |
| EM_$\overline{\text{WE}}$_DQM3 | 133 | O | IPU | N | Write Enable or Byte Enable for EM_D[31:24] |
| $\overline{\text{EM_OE}}$ | 186 | O | - | N | SDRAM/Asynchronous Output Enable |
| EM_R$\overline{\text{W}}$ | 183 | O | - | N | Asynchronous Memory Read/not Write |
| EM_WAIT | 190 | I | IPU | N | Asynchronous Wait Input (Programmable Polarity) or Interrupt (NAND) |

(1) TYPE column refers to pin direction in functional mode. If a pin has more than one function with different directions, the functions are separated with a slash (/).
(2) PULL column:
IPD = Internal Pulldown resistor
IPU = Internal Pullup resistor
(3) If the GPIO column is 'Y', then in GPIO mode, the pin is configurable as an IO unless otherwise marked.

Copyright © 2014, Texas Instruments Incorporated

**Table 2-12. Terminal Functions (continued)**

| SIGNAL NAME | HFH | TYPE(1) | PULL(2) | GPIO(3) | DESCRIPTION |
|---|---|---|---|---|---|
| **External Memory Interface (EMIF) Data Bus / Universal Host-Port Interface (UHPI) Address Bus Option** | | | | | |
| EM_D[0] | 96 | IO | - | N | EMIF Data Bus [Lower 16 Bits] |
| EM_D[1] | 95 | IO | - | N | |
| EM_D[2] | 86 | IO | - | N | |
| EM_D[3] | 91 | IO | - | N | |
| EM_D[4] | 85 | IO | - | N | |
| EM_D[5] | 78 | IO | - | N | |
| EM_D[6] | 75 | IO | - | N | |
| EM_D[7] | 73 | IO | - | N | |
| EM_D[8] | 116 | IO | - | N | |
| EM_D[9] | 114 | IO | - | N | |
| EM_D[10] | 117 | IO | - | N | |
| EM_D[11] | 111 | IO | - | N | |
| EM_D[12] | 109 | IO | - | N | |
| EM_D[13] | 112 | IO | - | N | |
| EM_D[14] | 102 | IO | - | N | |
| EM_D[15] | 106 | IO | - | N | |
| EM_D[16]/UHPI_HA[0] | 93 | IO/I | IPD | N | EMIF Data Bus [Upper 16 Bits (IO)] or UHPI Address Input (I) |
| EM_D[17]/UHPI_HA[1] | 89 | IO/I | IPD | N | |
| EM_D[18]/UHPI_HA[2] | 80 | IO/I | IPD | N | |
| EM_D[19]/UHPI_HA[3] | 76 | IO/I | IPD | N | |
| EM_D[20]/UHPI_HA[4] | 71 | IO/I | IPD | N | |
| EM_D[21]/UHPI_HA[5] | 81 | IO/I | IPD | N | |
| EM_D[22]/UHPI_HA[6] | 66 | IO/I | IPD | N | |
| EM_D[23]/UHPI_HA[7] | 63 | IO/I | IPD | N | |
| EM_D[24]/UHPI_HA[8] | 131 | IO/I | IPD | N | |
| EM_D[25]/UHPI_HA[9] | 135 | IO/I | IPD | N | |
| EM_D[26]/UHPI_HA[10] | 126 | IO/I | IPD | N | |
| EM_D[27]/UHPI_HA[11] | 107 | IO/I | IPD | N | |
| EM_D[28]/UHPI_HA[12] | 104 | IO/I | IPD | N | |
| EM_D[29]/UHPI_HA[13] | 100 | IO/I | IPD | N | |
| EM_D[30]/UHPI_HA[14] | 98 | IO/I | IPD | N | |
| EM_D[31]/UHPI_HA[15] | 88 | IO/I | IPD | N | |


Copyright © 2014, Texas Instruments Incorporated

**Table 2-12. Terminal Functions (continued)**

| SIGNAL NAME | HFH | TYPE[1] | PULL[2] | GPIO[3] | DESCRIPTION |
|---|---|---|---|---|---|
| **Universal Host-Port Interface (UHPI) Data and Control** | | | | | |
| UHPI_HD[0] | 161 | IO | IPD | Y | UHPI Data Bus [Lower 16 Bits] |
| UHPI_HD[1] | 156 | IO | IPD | Y | |
| UHPI_HD[2] | 153 | IO | IPD | Y | |
| UHPI_HD[3] | 152 | IO | IPD | Y | |
| UHPI_HD[4] | 146 | IO | IPD | Y | |
| UHPI_HD[5] | 138 | IO | IPD | Y | |
| UHPI_HD[6] | 143 | IO | IPD | Y | |
| UHPI_HD[7] | 141 | IO | IPD | Y | |
| UHPI_HD[8] | 181 | IO | IPD | Y | |
| UHPI_HD[9] | 179 | IO | IPD | Y | |
| UHPI_HD[10] | 182 | IO | IPD | Y | |
| UHPI_HD[11] | 177 | IO | IPD | Y | |
| UHPI_HD[12] | 168 | IO | IPD | Y | |
| UHPI_HD[13] | 171 | IO | IPD | Y | |
| UHPI_HD[14] | 162 | IO | IPD | Y | |
| UHPI_HD[15] | 167 | IO | IPD | Y | |
| UHPI_HD[16]/HHWIL | 30 | IO/I | IPD | Y | UHPI Data Bus [Upper 16 Bits (IO)] in the following modes:<br>• Fullword Multiplexed Address and Data<br>• Fullword Non-Multiplexed<br>UHPI_HHWIL (I) on pin UHPI_HD[16]/HHWIL and GPIO on other pins in the following mode:<br>• Half-word Multiplexed Address and Data<br>In this mode, UHPI_HHWIL indicates whether the high or low half-word is being addressed. |
| UHPI_HD[17] | 29 | IO | IPD | Y | |
| UHPI_HD[18] | 27 | IO | IPD | Y | |
| UHPI_HD[19] | 18 | IO | IPD | Y | |
| UHPI_HD[20] | 21 | IO | IPD | Y | |
| UHPI_HD[21] | 12 | IO | IPD | Y | |
| UHPI_HD[22] | 11 | IO | IPD | Y | |
| UHPI_HD[23] | 3 | IO | IPD | Y | |
| UHPI_HD[24] | 57 | IO | IPD | Y | |
| UHPI_HD[25] | 61 | IO | IPD | Y | |
| UHPI_HD[26] | 60 | IO | IPD | Y | |
| UHPI_HD[27] | 49 | IO | IPD | Y | |
| UHPI_HD[28] | 58 | IO | IPD | Y | |
| UHPI_HD[29] | 43 | IO | IPD | Y | |
| UHPI_HD[30] | 46 | IO | IPD | Y | |
| UHPI_HD[31] | 32 | IO | IPD | Y | |
| **Universal Host-Port Interface (UHPI) Control** | | | | | |
| $\overline{\text{UHPI_HBE[0]}}$ | 244 | I | IPD | Y | UHPI Byte Enable for UHPI_HD[7:0] |
| $\overline{\text{UHPI_HBE[1]}}$ | 246 | I | IPD | Y | UHPI Byte Enable for UHPI_HD[15:8] |
| $\overline{\text{UHPI_HBE[2]}}$ | 250 | I | IPD | Y | UHPI Byte Enable for UHPI_HD[23:16] |
| $\overline{\text{UHPI_HBE[3]}}$ | 252 | I | IPD | Y | UHPI Byte Enable for UHPI_HD[31:24] |
| UHPI_HCNTL[0] | 221 | I | IPD | Y | UHPI Control Inputs Select Access Mode |
| UHPI_HCNTL[1] | 219 | I | IPD | Y | |
| $\overline{\text{UHPI_HAS}}$ | 224 | I | IPD | Y | UHPI Host Address Strobe for Hosts with Multiplexed Address/Data bus |
| UHPI_HR$\overline{\text{W}}$ | 227 | I | IPD | Y | UHPI Read/not Write Input |
| $\overline{\text{UHPI_HDS[1]}}$ | 232 | I | IPU | Y | UHPI Select Signals which create the internal $\overline{\text{HSTROBE}}$ active when:<br>($\overline{\text{UHPI_HCS}}$ == '0') & ($\overline{\text{UHPI_HDS[1]}}$ != $\overline{\text{UHPI_HDS[2]}}$) |
| $\overline{\text{UHPI_HDS[2]}}$ | 235 | I | IPU | Y | |
| $\overline{\text{UHPI_HCS}}$ | 231 | I | IPU | Y | |
| $\overline{\text{UHPI_HRDY}}$ | 240 | O | IPD | Y | UHPI Ready Output |

Copyright © 2014, Texas Instruments Incorporated

**Table 2-12. Terminal Functions (continued)**

| SIGNAL NAME | HFH | TYPE[1] | PULL[2] | GPIO[3] | DESCRIPTION |
|---|---|---|---|---|---|
| **McASP0, McASP1, McASP2, and SPI1 Serial Ports** | | | | | |
| AHCLKR0/AHCLKR1 | 253 | IO | - | Y | McASP0 and McASP1 Receive Master Clock |
| ACLKR0 | 243 | IO | - | Y | McASP0 Receive Bit Clock |
| AFSR0 | 247 | IO | - | Y | McASP0 Receive Frame Sync (L/R Clock) |
| AHCLKX0/AHCLKX2 | 2 | IO | - | Y | McASP0 and McASP2 Transmit Master Clock |
| ACLKX0 | 249 | IO | - | Y | McASP0 Transmit Bit Clock |
| AFSX0 | 255 | IO | - | Y | McASP0 Transmit Frame Sync (L/R Clock) |
| AMUTE0 | 5 | O | - | Y | McASP0 MUTE Output |
| AXR0[0] | 201 | IO | - | Y | McASP0 Serial Data 0 |
| AXR0[1] | 203 | IO | - | Y | McASP0 Serial Data 1 |
| AXR0[2] | 204 | IO | - | Y | McASP0 Serial Data 2 |
| AXR0[3] | 207 | IO | - | Y | McASP0 Serial Data 3 |
| AXR0[4] | 210 | IO | - | Y | McASP0 Serial Data 4 |
| AXR0[5]/$\overline{\text{SPI1_SCS}}$ | 213 | IO | - | Y | McASP0 Serial Data 5 ***or*** SPI1 Slave Chip Select |
| AXR0[6]/$\overline{\text{SPI1_ENA}}$ | 216 | IO | - | Y | McASP0 Serial Data 6 ***or*** SPI1 Enable (Ready) |
| AXR0[7]/SPI1_CLK | 218 | IO | - | Y | McASP0 Serial Data 7 ***or*** SPI1 Serial Clock |
| AXR0[8]/AXR1[5]/ SPI1_SOMI | 225 | IO | - | Y | McASP0 Serial Data 8 ***or*** McASP1 Serial Data 5 ***or*** SPI1 Data Pin Slave Out Master In |
| AXR0[9]/AXR1[4]/ SPI1_SIMO | 222 | IO | - | Y | McASP0 Serial Data 9 ***or*** McASP1 Serial Data 4 ***or*** SPI1 Data Pin Slave In Master Out |
| AXR0[10]/AXR1[3] | 228 | IO | - | Y | McASP0 Serial Data 10 ***or*** McASP1 Serial Data 3 |
| AXR0[11]/AXR1[2] | 229 | IO | - | Y | McASP0 Serial Data 11 ***or*** McASP1 Serial Data 2 |
| AXR0[12]/AXR1[1] | 237 | IO | - | Y | McASP0 Serial Data 12 ***or*** McASP1 Serial Data 1 |
| AXR0[13]/AXR1[0] | 234 | IO | - | Y | McASP0 Serial Data 13 ***or*** McASP1 Serial Data 0 |
| AXR0[14]/AXR2[1] | 238 | IO | - | Y | McASP0 Serial Data 14 ***or*** McASP2 Serial Data 1 |
| AXR0[15]/AXR2[0] | 241 | IO | - | Y | McASP0 Serial Data 15 ***or*** McASP2 Serial Data 0 |
| ACLKR1 | 8 | IO | - | Y | McASP1 Receive Bit Clock |
| AFSR1 | 17 | IO | - | Y | McASP1 Receive Frame Sync (L/R Clock) |
| AHCLKX1 | 6 | IO | - | Y | McASP1 Transmit Master Clock |
| ACLKX1 | 15 | IO | - | Y | McASP1 Transmit Bit Clock |
| AFSX1 | 14 | IO | - | Y | McASP1 Transmit Frame Sync (L/R Clock) |
| AMUTE1 | 9 | IO | - | Y | McASP1 MUTE Output |
| AHCLKR2 | 191 | IO | IPD | Y | McASP2 Receive Master Clock |
| ACLKR2 | 195 | IO | IPD | Y | McASP2 Receive Bit Clock |
| AFSR2 | 198 | IO | IPD | Y | McASP2 Receive Frame Sync (L/R Clock) |
| ACLKX2 | 206 | IO | IPD | Y | McASP2 Transmit Bit Clock |
| AFSX2 | 212 | IO | IPD | Y | McASP2 Transmit Frame Sync (L/R Clock) |
| AMUTE2/$\overline{\text{HINT}}$ | 215 | O | IPD | Y | McASP2 MUTE Output ***or*** UHPI Host Interrupt |
| **SPI0, I2C0, and I2C1 Serial Port Pins** | | | | | |
| SPI0_SOMI/I2C0_SDA | 197 | IO | - | Y | SPI0 Data Pin Slave Out Master In ***or*** I2C0 Serial Data |
| SPI0_SIMO | 200 | IO | - | Y | SPI0 Data Pin Slave In Master Out |
| SPI0_CLK/I2C0_SCL | 189 | IO | - | Y | SPI0 Serial Clock ***or*** I2C0 Serial Clock |
| $\overline{\text{SPI0_SCS}}$/I2C1_SCL | 185 | IO | - | Y | SPI0 Slave Chip Select ***or*** I2C1 Serial Clock |
| $\overline{\text{SPI0_ENA}}$/I2C1_SDA | 187 | IO | - | Y | SPI0 Enable (Ready) ***or*** I2C1 Serial Data |


Copyright © 2014, Texas Instruments Incorporated

**Table 2-12. Terminal Functions (continued)**

| SIGNAL NAME | HFH | TYPE(1) | PULL(2) | GPIO(3) | DESCRIPTION |
|---|---|---|---|---|---|
| **Clocks** | | | | | |
| OSCIN | 37 | I | - | N | Oscillator Input |
| OSCOUT | 39 | O | - | N | Oscillator Output |
| $OSCV_{DD}$ | 42 | PWR | - | N | Oscillator $CV_{DD}$ tap point (for filter only) |
| $OSCV_{SS}$ | 40 | PWR | - | N | Oscillator $V_{SS}$ tap point (for filter only) |
| CLKIN | 26 | I | - | N | Alternate clock input (3.3-V LVCMOS Input) |
| PLLHV | 48 | PWR | - | N | PLL 3.3-V Supply Input (requires external filter) |
| **Device Reset** | | | | | |
| $\overline{\text{RESET}}$ | 20 | I | - | N | Device reset pin |
| **Emulation/JTAG Port** | | | | | |
| TCK | 55 | I | IPU | N | Test Clock |
| TMS | 34 | I | IPU | N | Test Mode Select |
| TDI | 52 | I | IPU | N | Test Data In |
| TDO | 54 | OZ | IPU | N | Test Data Out |
| $\overline{\text{TRST}}$ | 36 | I | IPD | N | Test Reset |
| $\overline{\text{EMU[0]}}$ | 45 | IO | IPU | N | Emulation Pin 0 |
| $\overline{\text{EMU[1]}}$ | 51 | IO | IPU | N | Emulation Pin 1 |
| **Power Pins** | | | | | |
| Core Supply ($CV_{DD}$) | 10, 22, 44, 56, 72, 82, 94, 110, 120, 140, 154, 166, 180, 202, 214, 236, 248 | | | | |
| IO Supply ($DV_{DD}$) | 4, 16, 28, 33, 38, 50, 62, 67, 77, 87, 99, 105, 115, 125, 132, 148, 157, 163, 173, 188, 196, 208, 220, 230, 242, 254 | | | | |
| Ground ($V_{SS}$) | 1, 7, 13, 19, 23, 25, 31, 35, 41, 47, 53, 59, 64, 65, 69, 74, 79, 84, 90, 92, 97, 101, 103, 108, 113, 118, 123, 128, 129, 136, 144, 151, 160, 170, 176, 184, 192, 193, 199, 205, 211, 217, 223, 226, 233, 239, 245, 251, 256 | | | | |
| No Connect (NC) | 24, 127, 130, 194, 209 | | | | |

Copyright © 2014, Texas Instruments Incorporated

## 2.10 Development

### *2.10.1 Development Support*

TI offers an extensive line of development tools for the TMS320C6000™ DSP platform, including tools to evaluate the performance of the processors, generate code, develop algorithm implementations, and fully integrate and debug software and hardware modules.

The following products support development of C6000™ DSP-based applications:

**Software Development Tools:**

Code Composer Studio™ Integrated Development Environment (IDE): including Editor

C/C++/Assembly Code Generation, and Debug plus additional development tools

Scalable, Real-Time Foundation Software ( DSP/BIOS™), which provides the basic run-time target software needed to support any DSP application.

**Hardware Development Tools:**

Extended Development System ( XDS™) Emulator (supports C6000™ DSP multiprocessor system debug) EVM (Evaluation Module)

For a complete listing of development-support tools for the TMS320C6000™ DSP platform, visit the Texas Instruments web site on the Worldwide Web at http://www.ti.com uniform resource locator (URL). For information on pricing and availability, contact the nearest TI field sales office or authorized distributor.

### *2.10.2 Device Support*

#### 2.10.2.1 Device and Development-Support Tool Nomenclature

To designate the stages in the product development cycle, TI assigns prefixes to the part numbers of all DSP devices and support tools. Each DSP commercial family member has one of three prefixes: TMX, TMP, or TMS (e.g., **TMS**320C6727BZDH275). Texas Instruments recommends two of three possible prefix designators for its support tools: TMDX and TMDS. These prefixes represent evolutionary stages of product development from engineering prototypes (TMX / TMDX) through fully qualified production devices/tools (TMS / TMDS).

Device development evolutionary flow:

**TMX** Experimental device that is not necessarily representative of the final device's electrical specifications

**TMP** Final silicon die that conforms to the device's electrical specifications but has not completed quality and reliability verification

**TMS** Fully-qualified production device

Support tool development evolutionary flow:

**TMDX** Development support product that has not yet completed Texas Instruments internal qualification testing

**TMDS** Fully qualified development support product

TMX and TMP devices and TMDX development-support tools are shipped against the following disclaimer:

"Developmental product is intended for internal evaluation purposes."

TMS devices and TMDS development-support tools have been characterized fully, and the quality and reliability of the device have been demonstrated fully. TI's standard warranty applies.


Copyright © 2014, Texas Instruments Incorporated

Predictions show that prototype devices (TMX or TMP) have a greater failure rate than the standard production devices. Texas Instruments recommends that these devices not be used in any production system because their expected end-use failure rate still is undefined. Only qualified production devices are to be used.

TI device nomenclature also includes a suffix with the device family name. This suffix indicates the package type (for example, HFH) and the temperature range. Figure 2-9 provides a legend for reading the complete device name for any TMS320C6000™ DSP platform member.

For device part numbers and further ordering information for SM320C6727B, see the Texas Instruments (TI) website at http://www.ti.com or contact your TI sales representative.

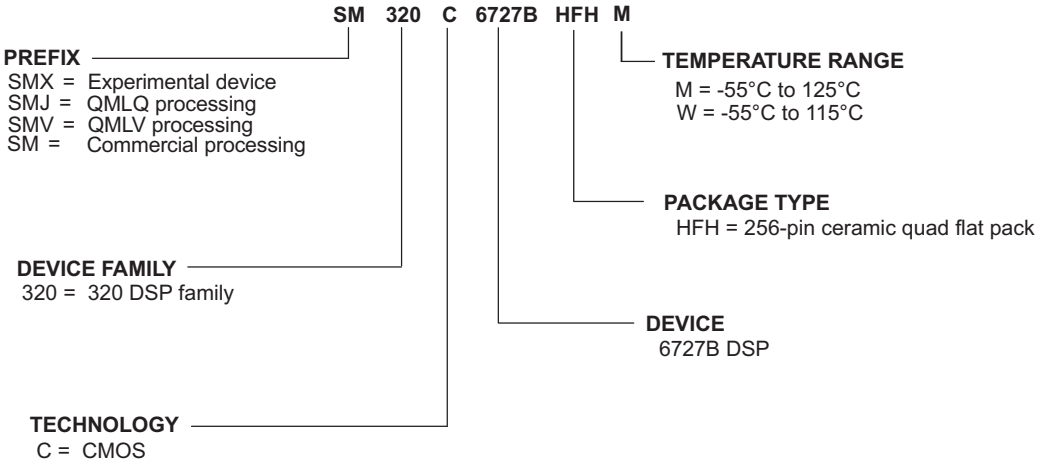


**Figure 2-9. SM320C6727B DSP Device Nomenclature**

Copyright © 2014, Texas Instruments Incorporated

### 2.10.2.2 Documentation Support

Extensive documentation supports all TMS320™ DSP family generations of devices from product announcement through applications development. The types of documentation available include: data manuals, such as this document, with design specifications; complete user's reference guides for all devices and tools; technical briefs; development-support tools; on-line help; and hardware and software applications. The following is a brief, descriptive list of support documentation specific to the C6727B DSP devices:

**SPRS277** ***C9230C100 SM320C6727B Floating-Point Digital Signal Processor ROM Data Manual.*** Describes the features of the C9230C100 SM320C6727B digital signal processor ROM.

**SPRZ232** ***TMS320C6727, TMS320C6727B, TMS320C6726, TMS320C6726B, TMS320C6722, TMS320C6722B, TMS320C6720 Digital Signal Processors Silicon Errata.*** Describes the known exceptions to the functional specifications for the TMS320C6727, TMS320C6727B, TMS320C6726, TMS320C6726B, TMS320C6722, TMS320C6722B, and TMS320C6720 digital signal processors (DSPs).

**SPRU723** ***SM320C6727B DSP Peripherals Overview Reference Guide.*** This document provides an overview and briefly describes the peripherals available on the SM320C6727B digital signal processors (DSPs) of the TMS320C6000 DSP platform.

**SPRU877** ***SM320C6727B DSP Inter-Integrated Circuit (I2C) Module Reference Guide.*** This document describes the inter-integrated circuit (I2C) module in the SM320C6727B digital signal processors (DSPs) of the TMS320C6000 DSP platform.

**SPRU795** ***SM320C6727B DSP Dual Data Movement Accelerator (dMAX) Reference Guide.*** This document provides an overview and describes the common operation of the data movement accelerator (dMAX) controller in the SM320C6727B digital signal processors (DSPs) of the TMS320C6000 DSP platform. This document also describes operations and registers unique to the dMAX controller.

**SPRAA78** ***TMS320C6713 to SM320C6727B Migration.*** This document describes the issues related to migrating from the TMS320C6713 to SM320C6727B digital signal processor (DSP).

**SPRU711** ***SM320C6727B DSP External Memory Interface (EMIF) User's Guide.*** This document describes the operation of the external memory interface (EMIF) in the SM320C6727B digital signal processors (DSPs) of the TMS320C6000 DSP platform.

**SPRU718** ***SM320C6727B DSP Serial Peripheral Interface (SPI) Reference Guide.*** This reference guide provides the specifications for a 16-bit configurable, synchronous serial peripheral interface. The SPI is a programmable-length shift register, used for high speed communication between external peripherals or other DSPs.

**SPRU719** ***SM320C6727B DSP Universal Host Port Interface (UHPI) Reference Guide.*** This document provides an overview and describes the common operation of the universal host port interface (UHPI).

**SPRU878** ***SM320C6727B DSP Multichannel Audio Serial Port (McASP) Reference Guide.*** This document describes the multichannel audio serial port (McASP) in the SM320C6727B digital signal processors (DSPs) of the TMS320C6000 DSP platform.

**SPRU879** ***SM320C6727B DSP Software-Programmable Phase-Locked Loop (PLL) Controller Reference Guide.*** This document describes the operation of the software-programmable phase-locked loop (PLL) controller in the SM320C6727B digital signal processors (DSPs) of the TMS320C6000 DSP platform.


Copyright © 2014, Texas Instruments Incorporated

**SPRU733** ***TMS320C67x/C67x+ DSP CPU and Instruction Set Reference Guide.*** Describes the CPU architecture, pipeline, instruction set, and interrupts for the TMS320C67x and TMS320C67x+ digital signal processors (DSPs) of the TMS320C6000 DSP platform. The C67x/C67x+ DSP generation comprises floating-point devices in the C6000 DSP platform. The C67x+ DSP is an enhancement of the C67x DSP with added functionality and an expanded instruction set.

**SPRAA69** ***Using the SM320C6727B Bootloader Application Report.*** This document describes the design details about the SM320C6727B bootloader. This document also addresses parallel flash and HPI boot to the extent relevant.

**SPRU301** ***TMS320C6000 Code Composer Studio Tutorial.*** This tutorial introduces you to some of the key features of Code Composer Studio. Code Composer Studio extends the capabilities of the Code Composer Integrated Development Environment (IDE) to include full awareness of the DSP target by the host and real-time analysis tools. This tutorial assumes that you have Code Composer Studio, which includes the TMS320C6000 code generation tools along with the APIs and plug-ins for both DSP/BIOS and RTDX. This manual also assumes that you have installed a target board in your PC containing the DSP device.

**SPRU198** ***TMS320C6000 Programmer's Guide.*** Reference for programming the TMS320C6000 digital signal processors (DSPs). Before you use this manual, you should install your code generation and debugging tools. Includes a brief description of the C6000 DSP architecture and code development flow, includes C code examples and discusses optimization methods for the C code, describes the structure of assembly code and includes examples and discusses optimizations for the assembly code, and describes programming considerations for the C64x DSP.

**SPRU186** ***TMS320C6000 Assembly Language Tools v6.0 Beta User's Guide.*** Describes the assembly language tools (assembler, linker, and other tools used to develop assembly language code), assembler directives, macros, common object file format, and symbolic debugging directives for the TMS320C6000 platform of devices (including the C64x+ and C67x+ generations). **NOTE: The enhancements to tools release v5.3 to support the C6727B devices are documented in the tools v6.0 documentation.**

**SPRU187** ***TMS320C6000 Optimizing Compiler v6.0 Beta User's Guide.*** Describes the TMS320C6000 C compiler and the assembly optimizer. This C compiler accepts ANSI standard C source code and produces assembly language source code for the TMS320C6000 platform of devices (including the C64x+ and C67x+ generations). The assembly optimizer helps you optimize your assembly code. **NOTE: The enhancements to tools release v5.3 to support the C6727B devices are documented in the tools v6.0 documentation.**

**SPRA839** ***Using IBIS Models for Timing Analysis***. Describes how to properly use IBIS models to attain accurate timing analysis for a given system.

The tools support documentation is electronically available within the Code Composer Studio™ Integrated Development Environment (IDE). For a complete listing of C6000™ DSP latest documentation, visit the Texas Instruments web site on the Worldwide Web at http://www.ti.com uniform resource locator (URL).

Copyright © 2014, Texas Instruments Incorporated

# 3 Device Configurations

## 3.1 Device Configuration Registers

The C6727B DSP includes several device-level configuration registers, which are listed in Table 3-1. These registers need to be programmed as part of the device initialization procedure. See Section 3.2.

**Table 3-1. Device-Level Configuration Registers**

| REGISTER NAME | BYTE ADDRESS | DESCRIPTION | DEFINED |
|---|---|---|---|
| CFGPIN0 | 0x4000 0000 | Captures values of eight pins on rising edge of $\overline{\text{RESET}}$ pin. | Table 2-10 |
| CFGPIN1 | 0x4000 0004 | Captures values of eight pins on rising edge of $\overline{\text{RESET}}$ pin. | Table 2-11 |
| CFGHPI | 0x4000 0008 | Controls enable of UHPI and selection of its operating mode. | Table 4-14 |
| CFGHPIAMSB | 0x4000 000C | Controls upper byte of UHPI address into C6727B address space in Non-Multiplexed Mode or if explicitly enabled for security purposes. | Table 4-15 |
| CFGHPIAUMB | 0x4000 0010 | Controls upper middle byte of UHPI address into C6727B address space in Non-Multiplexed Mode or if explicitly enabled for security purposes. | Table 4-16 |
| CFGRTI | 0x4000 0014 | Selects the sources for the RTI Input Captures from among the six McASP DMA events. | Table 4-39 |
| CFGMCASP0 | 0x4000 0018 | Selects the peripheral pin to be used as AMUTEIN0. | Table 4-21 |
| CFGMCASP1 | 0x4000 001C | Selects the peripheral pin to be used as AMUTEIN1. | Table 4-22 |
| CFGMCASP2 | 0x4000 0020 | Selects the peripheral pin to be used as AMUTEIN2. | Table 4-23 |
| CFGBRIDGE | 0x4000 0024 | Controls reset of the bridge BR2 in Figure 2-4. This bridge must be reset explicitly after any change to the PLL controller affecting SYSCLK1 and SYSCLK2 and before the dMAX or UHPI accesses the CPU Slave Port (CSP). | Table 2-7 |

## 3.2 Peripheral Pin Multiplexing Options

This section describes the options for configuring peripherals which share pins on the C6727B DSP. Table 3-2 lists the options for configuring the SPI0, I2C0, and I2C1 peripheral pins.

**Table 3-2. Options for Configuring SPI0, I2C0, and I2C1**

| | | CONFIGURATION | | |
|---|---|---|---|---|
| | | OPTION 1 | OPTION 2 | OPTION 3 |
| **PERIPHERAL** | SPI0 | 3-, 4,- or 5-pin mode | 3-pin mode | disabled |
| | I2C0 | disabled | disabled | enabled |
| | I2C1 | disabled | enabled | enabled |
| **PINS** | SPI0_SOMI/I2C0_SDA | SPI0_SOMI | SPI0_SOMI | I2C0_SDA |
| | SPI0_SIMO | SPI0_SIMO | SPI0_SIMO | GPIO through SPI0_SIMO pin control |
| | SPI0_CLK/I2C0_SCL | SPI0_CLK | SPI0_CLK | I2C0_SCL |
| | $\overline{\text{SPI0_SCS}}$/I2C1_SCL | $\overline{\text{SPI0_SCS}}$ | I2C1_SCL | I2C1_SCL |
| | $\overline{\text{SPI0_ENA}}$/I2C1_SDA | $\overline{\text{SPI0_ENA}}$ | I2C1_SDA | I2C1_SDA |


Copyright © 2014, Texas Instruments Incorporated

Table 3-3 lists the options for configuring the SPI1, McASP0, and McASP1 pins. Note that there are additional finer grain options when selecting which McASP controls the particular AXR serial data pins but these options are not listed here and can be made on a pin by pin basis.

**Table 3-3. Options for Configuring SPI1, McASP0, and McASP1 Data Pins**

| | | CONFIGURATION | | | | |
|---|---|---|---|---|---|---|
| | | **OPTION 1** | **OPTION 2** | **OPTION 3** | **OPTION 4** | **OPTION 5** |
| **PERIPHERAL** | SPI1 | 5-pin mode | 4-pin mode | 4-pin mode | 3-pin mode | disabled |
| | McASP0 (max data pins) | 11 | 12 | 12 | 13 | 16 |
| | McASP1 (max data pins) | 4 | 4 | 4 | 4 | 6 |
| **PINS** | AXR0[5]/ SPI1_SCS | SPI1_SCS | SPI1_SCS | AXR0[5] | AXR0[5] | AXR0[5] |
| | AXR0[6]/ SPI1_ENA | SPI1_ENA | AXR0[6] | SPI1_ENA | AXR0[6] | AXR0[6] |
| | AXR0[7]/ SPI1_CLK | SPI1_CLK | SPI1_CLK | SPI1_CLK | SPI1_CLK | AXR0[7] |
| | AXR0[8]/AXR1[5]/ SPI1_SOMI | SPI1_SOMI | SPI1_SOMI | SPI1_SOMI | SPI1_SOMI | AXR0[8] ***or*** AXR1[5] |
| | AXR0[9]/AXR1[4]/ SPI1_SIMO | SPI1_SIMO | SPI1_SIMO | SPI1_SIMO | SPI1_SIMO | AXR0[9] ***or*** AXR1[4] |

Table 3-4 lists the options for configuring the shared EMIF and UHPI pins.

**Table 3-4. Options for Configuring EMIF and UHPI (C6727B Only)**

| | | CONFIGURATION | |
|---|---|---|---|
| | | **OPTION 1** | **OPTION 2** |
| **PERIPHERAL** | UHPI | Multiplexed Address/Data Mode, Fullword, or Half-Word | Non-Multiplexed Address/Data Mode Fullword |
| | EMIF | 32-bit EMIF Data | 16-bit EMIF Data |
| **PINS** | EM_D[31:16]/ UHPI_HA[15:0] | EM_D[31:16] | UHPI_HA[15:0] |

## 3.3 Peripheral Pin Multiplexing Control

While Section 3.2 describes at a high level the most common pin multiplexing options, the control of pin multiplexing is largely determined on an individual pin-by-pin basis. Typically, each peripheral that shares a particular pin has internal control registers to determine the pin function and whether it is an input or an output.

The C6727B device determines whether a particular pin is an input or output based upon the following rules:

- The pin will be configured as an output if it is configured as an output in any of the peripherals sharing the pin.
- It is recommended that only one peripheral configure a given pin as an output. If more than one peripheral does configure a particular pin as an output, then the output value is controlled by the peripheral with highest priority for that pin. The priorities for each pin are given in Table 3-5.
- The value input on the pin is passed to all peripherals sharing the pin for input simultaneously.

Copyright © 2014, Texas Instruments Incorporated

**Table 3-5. Priority of Control of Data Output on Multiplexed Pins**

| PIN | FIRST PRIORITY | SECOND PRIORITY | THIRD PRIORITY |
|---|---|---|---|
| SPI0_SOMI/I2C0_SDA | SPI0_SOMI | I2C0_SDA | |
| SPI0_CLK/I2C0_SCL | SPI0_CLK | I2C0_SCL | |
| $\overline{\text{SPI0_SCS}}$/I2C1_SCL | $\overline{\text{SPI0_SCS}}$ | I2C1_SCL | |
| $\overline{\text{SPI0_ENA}}$/I2C1_SDA | $\overline{\text{SPI0_ENA}}$ | I2C1_SDA | |
| AXR0[5]/$\overline{\text{SPI1_SCS}}$ | AXR0[5] | $\overline{\text{SPI1_SCS}}$ | |
| AXR0[6]/$\overline{\text{SPI1_ENA}}$ | AXR0[6] | $\overline{\text{SPI1_ENA}}$ | |
| AXR0[7]/SPI1_CLK | AXR0[7] | SPI1_CLK | |
| AXR0[8]/AXR1[5]/SPI1_SOMI | AXR0[8] | AXR1[5] | SPI1_SOMI |
| AXR0[9]/AXR1[4]/SPI1_SIMO | AXR0[9] | AXR1[4] | SPI1_SIMO |
| AXR0[10]/AXR1[3] | AXR0[10] | AXR1[3] | |
| AXR0[11]/AXR1[2] | AXR0[11] | AXR1[2] | |
| AXR0[12]/AXR1[1] | AXR0[12] | AXR1[1] | |
| AXR0[13]/AXR1[0] | AXR0[13] | AXR1[0] | |
| AXR0[14]/AXR2[1] | AXR0[14] | AXR2[1] | |
| AXR0[15]/AXR2[0] | AXR0[15] | AXR2[0] | |
| AHCLKR0/AHCLKR1 | AHCLKR0 | AHCLKR1 | |
| AHCLKX0/AHCLKX2 | AHCLKX0 | AHCLKX2 | |
| AMUTE2/HINT | AMUTE2 | HINT | |
| HD[16]/HHWIL | HD[16] | HHWIL | |
| EM_D[31:16]/UHPI_HA[15:0](1) | EM_D[31:16] (Disabled if CFGHPI.NMUX=1) | UHPI_HA[15:0] (Input Only) | |

(1) When using the UHPI in non-multiplexed mode, ensure EM_D[31:16] are configured as inputs so that these pins may be used as UHPI_HA[15:0]. To ensure this, you must set the CFGHPI.NMUX bit to a '1' ***before the EMIF SDRAM initialization completes***; otherwise, a drive conflict will occur. [The EMIF bus parking function drives the data bus in between accesses.]


Copyright © 2014, Texas Instruments Incorporated

# 4 Peripheral and Electrical Specifications

## 4.1 Electrical Specifications

This section provides the absolute maximum ratings and the recommended operating conditions for the SM320C6727B DSP.

All electrical and switching characteristics in this data manual are valid over the recommended operating conditions unless otherwise specified.

## 4.2 Absolute Maximum Ratings(1) (2)

Over Operating Case Temperature Range (Unless Otherwise Noted)

| | | | UNIT |
|---|---|---|---|
| Supply voltage range, $CV_{DD}$, $OSCV_{DD}$ (3) | | –0.3 to 1.8 | V |
| Supply voltage range, $DV_{DD}$ , PLLHV | | –0.3 to 4 | V |
| Input Voltage Range | All pins except OSCIN | –0.3 to $DV_{DD}$ + 0.5 | V |
| | OSCIN pin | –0.3 to $CV_{DD}$ + 0.5 | |
| Output Voltage Range | All pins except OSCOUT | –0.3 to $DV_{DD}$ + 0.5 | V |
| | OSCOUT pin | –0.3 to $CV_{DD}$ + 0.5 | |
| Clamp Current | | ±20 | mA |
| Operating case temperature range, $T_C$ | | –55 to 125 | °C |
| Storage temperature range, $T_{stg}$ | | –65 to 150 | °C |

(1) Stresses beyond those listed under "absolute maximum ratings" may cause permanent damage to the device. These are stress ratings only, and functional operation of the device at these or any conditions beyond those indicated under "recommended operating conditions" is not implied. Exposure to absolute-maximum-rated conditions for extended periods may affect device reliability.
(2) All voltage values are with referenced to $V_{SS}$ unless otherwise specified.
(3) If $OSCV_{DD}$ and $OSCV_{SS}$ pins are used as filter pins for reduced oscillator jitter, they should not be connected to $CV_{DD}$ and $V_{SS}$ externally.

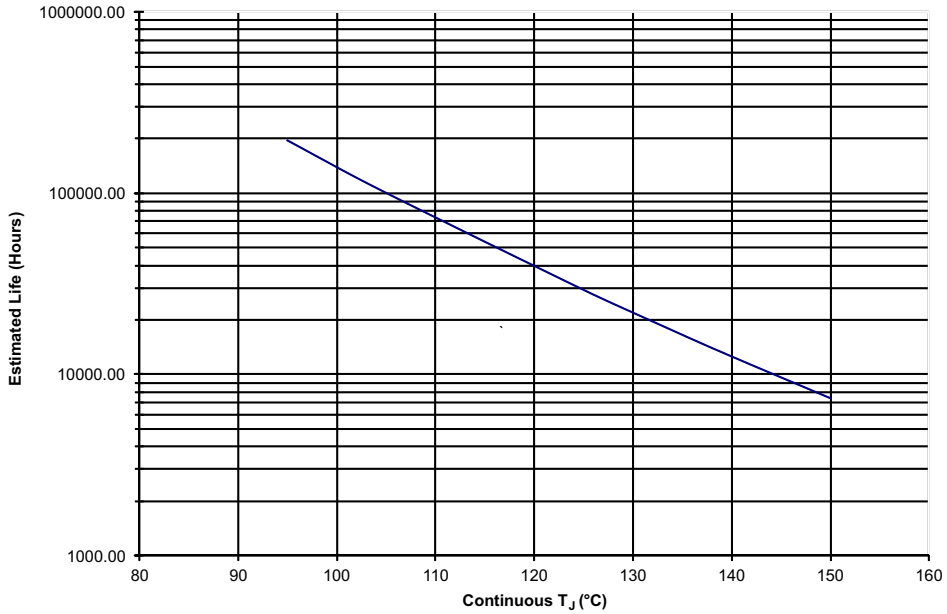


(1) See datasheet for absolute maximum and minimum recommended operating conditions.

**Figure 4-1. SM320C6727B EM Operating Life Derating Chart**

Copyright © 2014, Texas Instruments Incorporated

## 4.3 Recommended Operating Conditions(1)

| | | MIN | NOM | MAX | UNIT |
|---|---|---|---|---|---|
| $CV_{DD}$ | Core Supply Voltage | 1.14 | 1.2 | 1.32 | V |
| $DV_{DD}$ | I/O Supply Voltage | 3.13 | 3.3 | 3.47 | V |
| $T_C$ | Operating Case Temperature Range | –55 | | 125 | °C |

(1) All voltage values are with referenced to $V_{SS}$ unless otherwise specified.

## 4.4 Electrical Characteristics

Over Operating Case Temperature Range (Unless Otherwise Noted)

| PARAMETER | | TEST CONDITIONS | MIN | TYP | MAX | UNIT |
|---|---|---|---|---|---|---|
| $V_{OH}$ | High Level Output Voltage | $I_O$ = –100 µA | $DV_{DD}$ – 0.2 | | | V |
| $V_{OL}$ | Low Level Output Voltage | $I_O$ = 100 µA | | | 0.2 | V |
| $I_{OH}$ | High-Level Output Current | $V_O$ = 0.78 x $DV_{DD}$ | | | –8 | mA |
| $I_{OL}$ | Low-Level Output Current | $V_O$ = 0.22 x $DV_{DD}$ | | | 8 | mA |
| $V_{IH}$ | High-Level Input Voltage | | 2 | | $DV_{DD}$ | V |
| $V_{IL}$ | Low-Level Input Voltage | | 0 | | 0.8 | V |
| $V_{HYS}$ | Input Hysterisis | | | 0.13 x $DV_{DD}$ | | V |
| $I_I$, $I_{OZ}$ | Input Current and Off State Output Current | Pins without pullup or pulldown | | | ±10 | µA |
| | | Pins with internal pullup | –40 | | –170 | |
| | | Pins with internal pulldown | 40 | | 170 | |
| $t_{tr}$ | Input Transition Time | | | 25 | | ns |
| $C_I$ | Input Capacitance(1) | | | | 10 | pF |
| $C_O$ | Output Capacitance(1) | | | | 10 | pF |
| $I_{DD2V}$ | $CV_{DD}$ Supply(2) | $CV_{DD}$ = 1.2 V, CPU clock = 250 MHz | | 800 | | mA |
| $I_{DD3V}$ | $DV_{DD}$ Supply(2) | $DV_{DD}$ = 3.3 V, 32-bit EMIF speed = 100 MHz | | 76 | | mA |

(1) Tested at initial qualification or major change only.
(2) Assumes the following conditions: 25°C case temperature; 60% CPU utilization; EMIF at 50% utilization (100 MHz), 50% writes, 50% bit switching; two 10-MHz SPI at 100% utilization, 50% bit switching.
The actual current draw is highly application-dependent.


Copyright © 2014, Texas Instruments Incorporated

## 4.5 Parameter Information

### *4.5.1 Parameter Information Device-Specific Information*

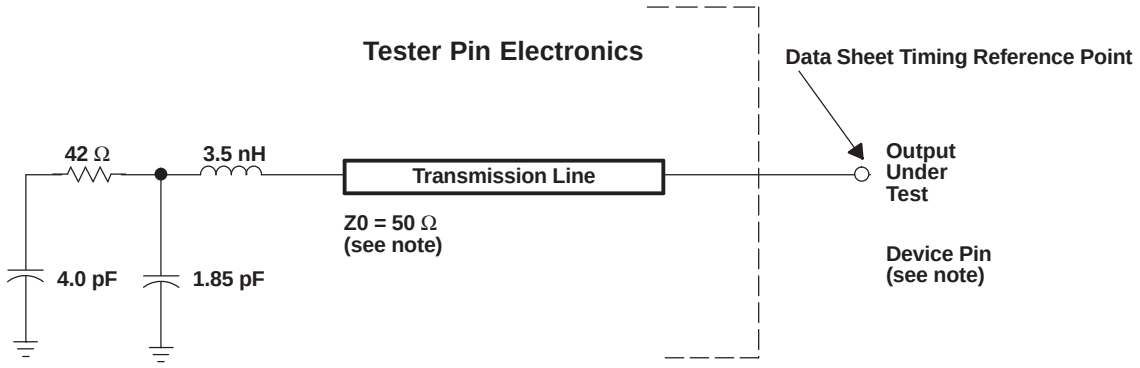


A. The data sheet provides timing at the device pin. For output timing analysis, the tester pin electronics and its transmission line effects must be taken into account. A transmission line with a delay of 2 ns or longer can be used to produce the desired transmission line effect. The transmission line is intended as a load only. It is not neccessary to add or subtract the transmission line delay (2 ns or longer) from the data sheet timings.
Input requirements in this data sheet are tested with an input slew rate of < 4 Volts per nanosecond (4 V/ns) at the device pin.

**Figure 4-2. Test Load Circuit for AC Timing Measurements**

#### 4.5.1.1 Signal Transition Levels

All input and output timing parameters are referenced to 1.5 V for both "0" and "1" logic levels.

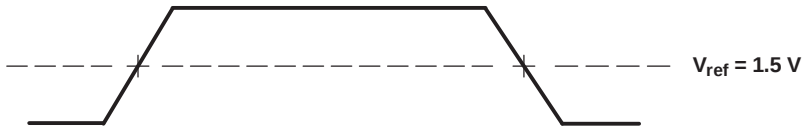


**Figure 4-3. Input and Output Voltage Reference Levels for AC Timing Measurements**

All rise and fall transition timing parameters are referenced to $V_{IL}$ MAX and $V_{IH}$ MIN for input clocks, $V_{OL}$ MAX and $V_{OH}$ MIN for output clocks.

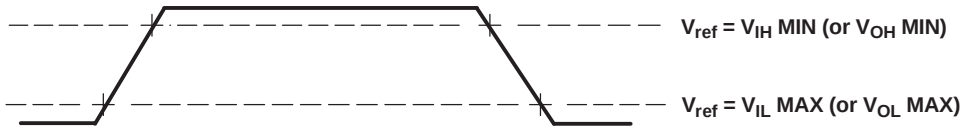


**Figure 4-4. Rise and Fall Transition Time Voltage Reference Levels**

#### 4.5.1.2 Signal Transition Rates

All timings are tested with an input edge rate of 4 Volts per nanosecond (4 V/ns).

Copyright © 2014, Texas Instruments Incorporated

## 4.6 Timing Parameter Symbology

Timing parameter symbols used in the timing requirements and switching characteristics tables are created in accordance with JEDEC Standard 100. To shorten the symbols, some of the pin names and other related terminology have been abbreviated as follows:

| Lowercase subscripts and their meanings: | |
|---|---|
| a | access time |
| c | cycle time (period) |
| d | delay time |
| dis | disable time |
| en | enable time |
| f | fall time |
| h | hold time |
| r | rise time |
| su | setup time |
| t | transition time |
| v | valid time |
| w | pulse duration (width) |
| X | Unknown, changing, or don't care level |

| Letters and symbols and their meanings: | |
|---|---|
| H | High |
| L | Low |
| V | Valid |
| Z | High impedance |


Copyright © 2014, Texas Instruments Incorporated

## 4.7 Power Supplies

For more information regarding TI's power management products and suggested devices to power TI DSPs, visit www.ti.com/dsppower.

### *4.7.1 Power-Supply Sequencing*

This device does not require specific power-up sequencing between the $DV_{DD}$ and $CV_{DD}$ voltage rails; however, there are some considerations that the system designer should take into account:

1. Neither supply should be powered up for an extended period of time (>1 second) while the other supply is powered down.
2. The I/O buffers powered from the $DV_{DD}$ rail also require the $CV_{DD}$ rail to be powered up in order to be controlled; therefore, an I/O pin that is supposed to be 3-stated by default may actually drive momentarily until the $CV_{DD}$ rail has powered up. Systems should be evaluated to determine if there is a possibility for contention that needs to be addressed. In most systems where both the $DV_{DD}$ and $CV_{DD}$ supplies ramp together, as long as $CV_{DD}$ tracks $DV_{DD}$ closely, any contention is also mitigated by the fact that the $CV_{DD}$ rail would reach its specified operating range well before the $DV_{DD}$ rail has fully ramped.

### *4.7.2 Power-Supply Decoupling*

In order to properly decouple the supply planes from system noise, place as many capacitors (caps) as possible close to the DSP. The core supply caps can be placed in the interior space of the package and the I/O supply caps can be placed around the exterior space of the package. For the HFH package, it is recommended that the core supply caps be placed on the underside of the PCB and the I/O supply caps be placed on the top side of the PCB.

Both core and I/O decoupling can be accomplished by alternating small (0.1 µF) low ESR ceramic bypass caps with medium (0.220 µF) low ESR ceramic bypass caps close to the DSP power pins and adding large tantalum or ceramic caps (ranging from 10 µF to 100 µF) further away. Assuming 0603 caps, it is recommended that at least 6 small, 6 medium, and 4 large caps be used for the core supply and 12 small, 12 medium, and 4 large caps be used for the I/O supply.

Any cap selection needs to be evaluated from an electromagnetic radiation (EMI) point-of-view; EMI varies from one system design to another so it is expected that engineers alter the decoupling capacitors to minimize radiation. Refer to the *High-Speed DSP Systems Design Reference Guide* (literature number SPRU889) for more detailed design information on decoupling techniques.

Copyright © 2014, Texas Instruments Incorporated

## 4.8 Reset

A hardware reset ($\overline{\text{RESET}}$) is required to place the DSP into a known good state out of power-up. The $\overline{\text{RESET}}$ signal can be asserted (pulled low) prior to ramping the core and I/O voltages or after the core and I/O voltages have reached their proper operating conditions. As a best practice, $\overline{\text{RESET}}$ should be held low during power-up. Prior to deasserting $\overline{\text{RESET}}$ (low-to-high transition), the core and I/O voltages should be at their proper operating conditions.

### *4.8.1 Reset Electrical Data/Timing*

Table 4-1 assumes testing over recommended operating conditions.

**Table 4-1. Reset Timing Requirements**

| NO. | PARAMETER | | MIN | TYP | MAX | UNIT |
|---|---|---|---|---|---|---|
| 1 | $t_{w(RSTL)}$ | Pulse width, $\overline{\text{RESET}}$ low | 100 | | | ns |
| 2 | $t_{su(BPV-RSTH)}$ | Setup time, boot pins valid before $\overline{\text{RESET}}$ high | 20 | | | ns |
| 3 | $t_{h(RSTH-BPV)}$ | Hold time, boot pins valid after $\overline{\text{RESET}}$ high | 20 | | | ns |


Copyright © 2014, Texas Instruments Incorporated

## 4.9 Dual Data Movement Accelerator (dMAX)

### *4.9.1 dMAX Device-Specific Information*

The dMAX is a module designed to perform Data Movement Acceleration. The dMAX controller handles user-programmed data transfers between the internal data memory controller and the device peripherals on the C6727B DSP. The dMAX allows movement of data to/from any addressable memory space, including internal memory, peripherals, and external memory. The dMAX controller in the C6727B DSP has a different architecture from the previous EDMA controller in the C621x/C671x devices.

The dMAX controller includes features, such as capability to perform three-dimensional data transfers for advanced data sorting, capability to manage a section of the memory as a circular buffer/FIFO with delay tap based reading and writing data. The dMAX controller is capable of concurrently processing two transfer requests (provided that they are to/from different source/destinations).

Figure 4-5 shows a block diagram of the dMAX controller.

Copyright © 2014, Texas Instruments Incorporated

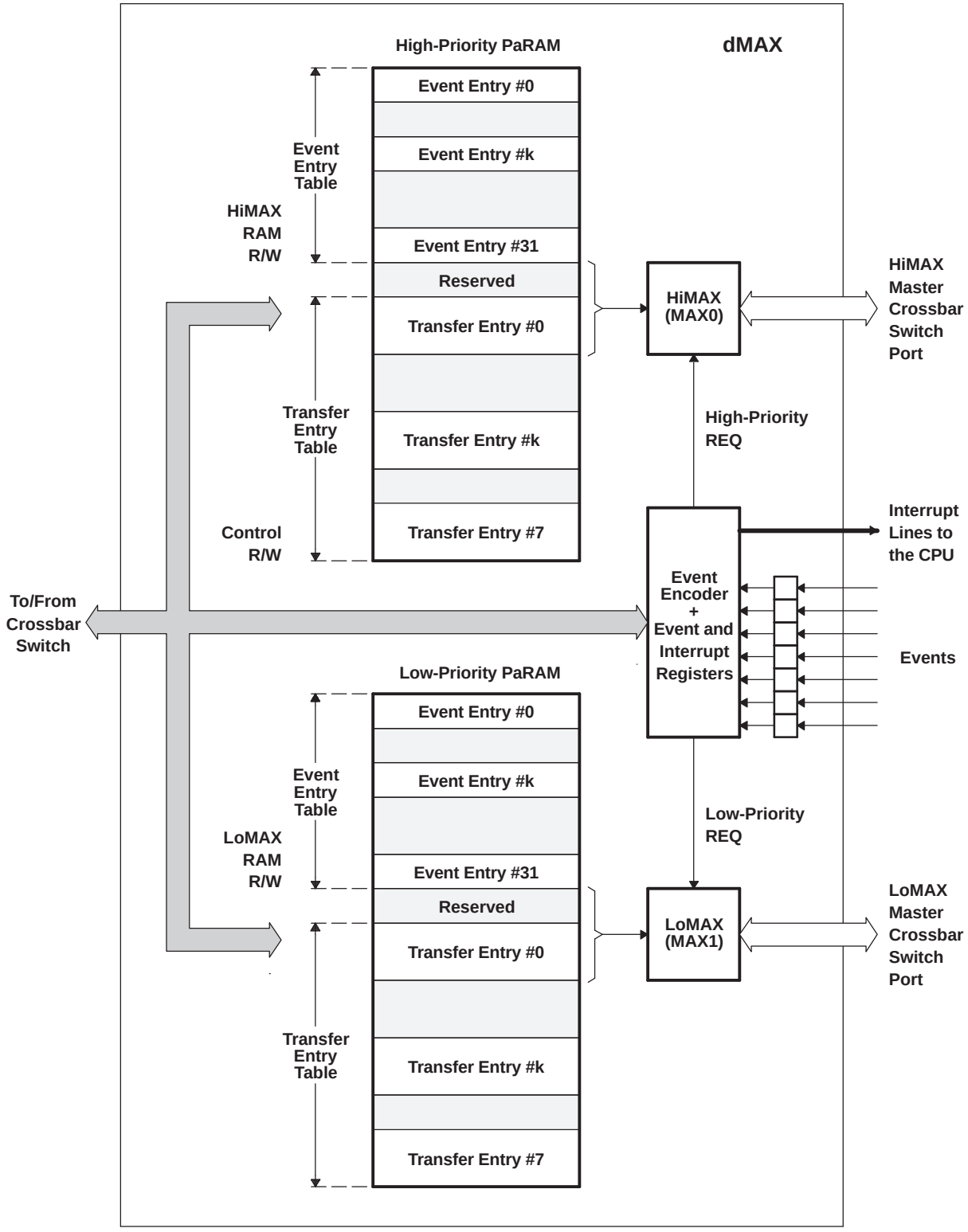


**Figure 4-5. dMAX Controller Block Diagram**


Copyright © 2014, Texas Instruments Incorporated

The dMAX controller comprises:

- Event and interrupt processing registers
- Event encoder
- High-priority event Parameter RAM (PaRAM)
- Low-priority event Parameter RAM (PaRAM)
- Address-generation hardware for High-Priority Events – MAX0 (HiMAX)
- Address-generation hardware for Low-Priority Events – MAX1 (LoMAX)

The SM320C6727B Peripheral Bus Structure can be described logically as a Crossbar Switch with five master ports and five slave ports. When accessing the slave ports, the MAX0 (HiMAX) module is always given the highest priority followed by the MAX1 (LoMAX) module. In other words, in case several masters (including MAX0 and MAX1) attempt to access same slave port concurrently, the MAX0 will be given the highest priority followed by MAX1.

Event signals are connected to bits of the dMAX Event Register (DER), and the bits in the DER reflect the current state of the event signals. An event is defined as a transition of the event signal. The dMAX Event Flag Register (DEFR) can be programmed, individually for each event signal, to capture either low-to-high or high-to-low transitions of the bits in the DER (event polarity is individually programmable).

An event is a synchronization signal that can be used: 1) to either trigger dMAX to start a transfer, or 2) to generate an interrupt to the CPU. All the events are sorted into two groups: low-priority event group and high-priority event group.

The High-Priority Data Movement Accelerator MAX0 (HiMAX) module is dedicated to serving requests coming from the high-priority event group. The Low-Priority Data Movement Accelerator MAX1 (LoMAX) module is dedicated to serving requests coming from the low-priority event group.

Each PaRAM contains two sections: the event entry table section and the transfer entry table section. An event entry describes an event type and associates the event to either one of transfer types or to an interrupt. In case an event entry associates the event to one of the transfer types, the event entry will contain a pointer to the specific transfer entry in the transfer entry table. The transfer table may contain up to eight transfer entries. A transfer entry specifies details required by the dMAX controller to perform the transfer. In case an event entry associates the event to an interrupt, the event entry specifies which interrupt should be generated to the CPU in case the event arrives.

Prior to enabling events and triggering a transfer, the event entry and transfer entry must be configured. The event entry must specify: type of transfer, transfer details (type of synchronization, reload, element size, etc.), and should include a pointer to the transfer entry. The transfer entry must specify: source, destination, counts, and indexes. If an event is sorted in the high-priority event group, the event entry and transfer entry must be specified in the high-priority Parameter RAM. If an event is sorted in the low-priority event group, the event entry and transfer entry must be specified in the low-priority parameter RAM.

The dMAX Event Flag Register (DEFR) captures up to 31 separate events; therefore, it is possible for events to occur simultaneously on the dMAX event inputs. In such cases, the event encoder resolves the order of processing. This mechanism sorts simultaneous events and sets the priority of the events. The dMAX controller can simultaneously process one event from each priority group. Therefore, the two highest-priority events (one from each group) can be processed at the same time.

An event-triggered dMAX transfer allows the submission of transfer requests to occur automatically based on system events, without any intervention by the CPU. The dMAX also includes support for CPU-initiated transfers for added control and robustness, and they can be used to start memory-to-memory transfers. To generate an event to the dMAX controller the CPU must create a transition on one of the bits from the dMAX Event Trigger (DETR) Register, which are mapped to the DER register.

Copyright © 2014, Texas Instruments Incorporated

Table 4-2 lists how the synchronization events are associated with event numbers in the dMAX controller.

**Table 4-2. dMAX Peripheral Event Input Assignments**

| EVENT NUMBER | EVENT ACRONYM | EVENT DESCRIPTION |
|---|---|---|
| 0 | DETR[0] | The CPU triggers the event by creating appropriate transition (edge) on bit0 in DETR register. |
| 1 | DETR[16] | The CPU triggers the event by creating appropriate transition (edge) on bit16 in DETR register. |
| 2 | RTIREQ0 | RTI DMA REQ[0] |
| 3 | RTIREQ1 | RTI DMA REQ[1] |
| 4 | MCASP0TX | McASP0 TX DMA REQ |
| 5 | MCASP0RX | McASP0 RX DMA REQ |
| 6 | MCASP1TX | McASP1 TX DMA REQ |
| 7 | MCASP1RX | McASP1 RX DMA REQ |
| 8 | MCASP2TX | McASP2 TX DMA REQ |
| 9 | MCASP2RX | McASP2 RX DMA REQ |
| 10 | DETR[1] | The CPU triggers the event by creating appropriate transition (edge) on bit1 in DETR register. |
| 11 | DETR[17] | The CPU triggers the event by creating appropriate transition (edge) on bit17 in DETR register. |
| 12 | UHPIINT | UHPI CPU_INT |
| 13 | SPI0RX | SPI0 DMA_RX_REQ |
| 14 | SPI1RX | SPI1 DMA_RX_REQ |
| 15 | RTIREQ2 | RTI DMA REQ[2] |
| 16 | RTIREQ3 | RTI DMA REQ[3] |
| 17 | DETR[2] | The CPU triggers the event by creating appropriate transition (edge) on bit2 in DETR register. |
| 18 | DETR[18] | The CPU triggers the event by creating appropriate transition (edge) on bit18 in DETR register. |
| 19 | I2C0XEVT | I2C 0 Transmit Event |
| 20 | I2C0REVT | I2C 0 Receive Event |
| 21 | I2C1XEVT | I2C 1 Transmit Event |
| 22 | I2C1REVT | I2C 1 Receive Event |
| 23 | DETR[3] | The CPU triggers the event by creating appropriate transition (edge) on bit3 in DETR register. |
| 24 | DETR[19] | The CPU triggers the event by creating appropriate transition (edge) on bit19 in DETR register. |
| 25 | Reserved | |
| 26 | MCASP0ERR | AMUTEIN0 or McASP0 TX INT or McASP0 RX INT (error on McASP0) |
| 27 | MCASP1ERR | AMUTEIN1 or McASP1 TX INT or McASP1 RX INT (error on McASP1) |
| 28 | MCASP2ERR | AMUTEIN2 or McASP2 TX INT or McASP2 RX INT (error on McASP2) |
| 29 | OVLREQ[0/1] | Error on RTI |
| 30 | DETR[20] | The CPU triggers the event by creating appropriate transition (edge) on bit20 in DETR register. |
| 31 | DETR[21] | The CPU triggers the event by creating appropriate transition (edge) on bit21 in DETR register. |


Copyright © 2014, Texas Instruments Incorporated

### 4.9.2 dMAX Peripheral Registers Description(s)

Table 4-3 is a list of the dMAX registers.

**Table 4-3. dMAX Configuration Registers**

| BYTE ADDRESS | REGISTER NAME | DESCRIPTION |
|---|---|---|
| 0x6000 0008 | DEPR | Event Polarity Register |
| 0x6000 000C | DEER | Event Enable Register |
| 0x6000 0010 | DEDR | Event Disable Register |
| 0x6000 0014 | DEHPR | Event High-priority Register |
| 0x6000 0018 | DELPR | Event Low-priority Register |
| 0x6000 001C | DEFR | Event Flag Register |
| 0x6000 0034 | DER0 | Event Register 0 |
| 0x6000 0054 | DER1 | Event Register 1 |
| 0x6000 0074 | DER2 | Event Register 2 |
| 0x6000 0094 | DER3 | Event Register 3 |
| 0x6000 0040 | DFSR0 | FIFO Status Register 0 |
| 0x6000 0060 | DFSR1 | FIFO Status Register 1 |
| 0x6000 0080 | DTCR0 | Transfer Complete Register 0 |
| 0x6000 00A0 | DTCR1 | Transfer Complete Register 1 |
| N/A | DETR | Event Trigger Register (Located in C67x+ DSP Register File) |
| N/A | DESR | Event Status Register (Located in C67x+ DSP Register File) |

Copyright © 2014, Texas Instruments Incorporated

## 4.10 External Interrupts

The C6727B DSP has no dedicated general-purpose interrupt pins, but the dMAX can be used in combination with a McASP AMUTEIN signal to provide external interrupt capability. There is a multiplexer for each McASP, controlled by the CFGMCASP0/1/2 registers, which allows the AMUTEIN input for that McASP to be sourced from one of seven I/O pins on the DSP. Once a pin is configured as an AMUTEIN source, a very short pulse (two SYSCLK2 cycles or more) on that pin will generate an event to the dMAX. This event can trigger the dMAX to generate a CPU interrupt by programming the assoicated Event Entry.

There are a few additional points to consider when using the AMUTEIN signal to enable external interrupts as described above. The I/O pin selected by the CFGMCASP0/1/2 registers must be configured as a general-purpose input pin within the associated peripheral. Also, the AMUTEIN signal should be disabled within the corresponding McASP so that AMUTE is not driven when AMUTEIN is active. This can be done by clearing the INEN bit of the AMUTE register inside the McASP. Finally, AMUTEIN events are logically ORed with the McASP transmit and receive error events within the dMAX; therefore, the ISR that processes the dMAX interrupt generated by these events must discern the source of the event.

The EMIF EM_WAIT pin has the ability to generate an NMI (INT1) based upon a rising edge on the EM_WAIT pin. Note that while this interrupt is connected to the CPU NMI (non-maskable interrupt), it is actually maskable through the EMIF control registers. In fact, the default state for this interrupt is disabled. Also, interrupt generation always occurs on a rising edge of EM_WAIT; the polarity selection for wait state generation has no effect on the interrupt polarity. The EM_WAIT pin should remain asserted for at least two SYSCLK3 cycles to ensure that the edge is detected.


Copyright © 2014, Texas Instruments Incorporated

## 4.11 External Memory Interface (EMIF)

### *4.11.1 EMIF Device-Specific Information*

The C6727B DSP includes an external memory interface (EMIF) for optional SDRAM, NOR FLASH, NAND FLASH, or SRAM. The key features of this EMIF are:

- One chip select ($\overline{\text{EM_CS[0]}}$) dedicated for x16 and x32 SDRAM (x8 not supported)
- One chip select ($\overline{\text{EM_CS[2]}}$) dedicated for x8, x16, or x32 NOR FLASH; x8, x16, or x32 Asynchronous SRAM; or x8 or x16 NAND FLASH
- Data bus width is 32 bits on the C6727B.
- SDRAM burst length of 16 bytes
- External Wait Input on the C6727B through EM_WAIT (programmable active-high or active-low)
- External Wait pin functions as an interrupt for NAND Flash support
- NAND Flash logic calculates ECC on blocks of up to 512 bytes
- ECC logic suitable for single-bit errors

Figure 4-6 shows a typical example of EMIF-to-memory hookup on the C6727B DSP.

As the figures illustrate, the C6727B DSP includes a limited number of EMIF address lines. These are sufficient to connect to SDRAM seamlessly. Asynchronous memory such as FLASH typically will need to use additional GPIO pins to act as upper address lines during device boot up when the FLASH contents are copied into SDRAM. (Normally, code is executed from SDRAM since SDRAM has faster access times).

Any pins listed with a ‘Y' in the GPIO column of Table 2-12 may be used for this purpose, as long as it can be assured that they be pulled low at (and after) reset and held low until configured as outputs by the DSP.

Note that EM_BA[1:0] are used as low-order address lines for the asynchronous interface. For example, in Figure 4-6, the flash memory is not byte-addressable and its A[0] input selects a 16-bit value. The corresponding DSP address comes from EM_BA[1]. The remaining address lines from the DSP (EM_A[12:0]) drive a word address into the flash inputs A[13:1].

Copyright © 2014, Texas Instruments Incorporated

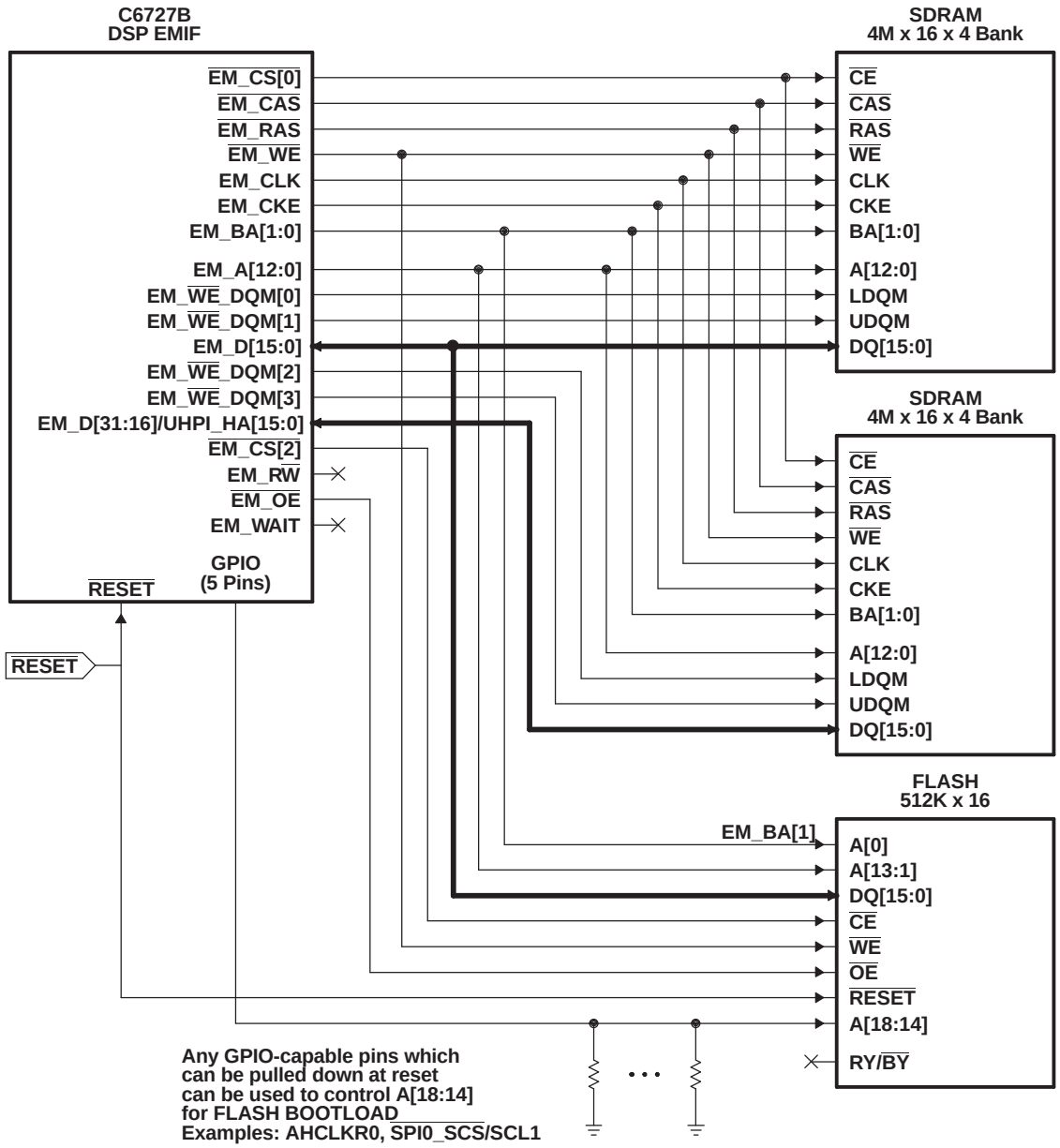


**Figure 4-6. C6727B DSP 32-Bit EMIF Example**


Copyright © 2014, Texas Instruments Incorporated

### 4.11.2 EMIF Peripheral Registers Description(s)

Table 4-4 is a list of the EMIF registers. For more information about these registers, see the *TMS320C6727B DSP External Memory Interface (EMIF) User's Guide* (literature number SPRU711).

**Table 4-4. EMIF Registers**

| BYTE ADDRESS | REGISTER NAME | DESCRIPTION |
|---|---|---|
| 0xF000 0004 | AWCCR | Asynchronous Wait Cycle Configuration Register |
| 0xF000 0008 | SDCR | SDRAM Configuration Register |
| 0xF000 000C | SDRCR | SDRAM Refresh Control Register |
| 0xF000 0010 | A1CR | Asynchronous 1 Configuration Register |
| 0xF000 0020 | SDTIMR | SDRAM Timing Register |
| 0xF000 003C | SDSRETR | SDRAM Self Refresh Exit Timing Register |
| 0xF000 0040 | EIRR | EMIF Interrupt Raw Register |
| 0xF000 0044 | EIMR | EMIF Interrupt Mask Register |
| 0xF000 0048 | EIMSR | EMIF Interrupt Mask Set Register |
| 0xF000 004C | EIMCR | EMIF Interrupt Mask Clear Register |
| 0xF000 0060 | NANDFCR | NAND Flash Control Register |
| 0xF000 0064 | NANDFSR | NAND Flash Status Register |
| 0xF000 0070 | NANDF1ECC | NAND Flash 1 ECC Register |

Copyright © 2014, Texas Instruments Incorporated

### 4.11.3 EMIF Electrical Data/Timing

Table 4-5 through Table 4-10 assume testing over recommended operating conditions (see Figure 4-7 through Figure 4-13).

**Table 4-5. 100-MHz EMIF SDRAM Interface Timing Requirements(1)**

| NO. | PARAMETER | | MIN | TYP | MAX | UNIT |
|---|---|---|---|---|---|---|
| 19 | $t_{su(EM_DV-EM_CLKH)}$ | Input setup time, read data valid on D[31:0] before EM_CLK rising | 3 | | | ns |
| 20 | $t_{h(EM_CLKH-EM_DIV)}$ | Input hold time, read data valid on D[31:0] after EM_CLK rising | 1.9 | | | ns |

(1) For more information about supported EMIF frequency, see Table 2-1.

**Table 4-6. 100-MHz EMIF SDRAM Interface Switching Characteristics(1)**

| NO. | PARAMETER | | MIN | TYP | MAX | UNIT |
|---|---|---|---|---|---|---|
| 1 | $t_{c(EM_CLK)}$ | Cycle time, EMIF clock EM_CLK | 10 | | | ns |
| 2 | $t_{w(EM_CLK)}$ | Pulse width, EMIF clock EM_CLK high or low | 3 | | | ns |
| 3 | $t_{d(EM_CLKH-EM_CSV)S}$ | Delay time, EM_CLK rising to $\overline{EM_CS[0]}$ valid | | | 7.7 | ns |
| 4 | $t_{oh(EM_CLKH-EM_CSIV)S}$ | Output hold time, EM_CLK rising to $\overline{EM_CS[0]}$ invalid | 1.15 | | | ns |
| 5 | $t_{d(EM_CLKH-EM_WE-DQMV)S}$ | Delay time, EM_CLK rising to EM_$\overline{WE}$_DQM[3:0] valid | | | 7.7 | ns |
| 6 | $t_{oh(EM_CLKH-EM_WE-DQMIV)S}$ | Output hold time, EM_CLK rising to EM_$\overline{WE}$_DQM[3:0] invalid | -3 | | | ns |
| 7 | $t_{d(EM_CLKH-EM_AV)S}$ | Delay time, EM_CLK rising to EM_A[12:0] and EM_BA[1:0] valid | | | 7.7 | ns |
| 8 | $t_{oh(EM_CLKH-EM_AIV)S}$ | Output hold time, EM_CLK rising to EM_A[12:0] and EM_BA[1:0] invalid | -3 | | | ns |
| 9 | $t_{d(EM_CLKH-EM_DV)S}$ | Delay time, EM_CLK rising to EM_D[31:0] valid | | | 7.7 | ns |
| 10 | $t_{oh(EM_CLKH-EM_DIV)S}$ | Output hold time, EM_CLK rising to EM_D[31:0] invalid | -3 | | | ns |
| 11 | $t_{d(EM_CLKH-EM_RASV)S}$ | Delay time, EM_CLK rising to $\overline{EM_RAS}$ valid | | | 7.7 | ns |
| 12 | $t_{oh(EM_CLKH-EM_RASIV)S}$ | Output hold time, EM_CLK rising to $\overline{EM_RAS}$ invalid | 1.15 | | | ns |
| 13 | $t_{d(EM_CLKH-EM_CASV)S}$ | Delay time, EM_CLK rising to $\overline{EM_CAS}$ valid | | | 7.7 | ns |
| 14 | $t_{oh(EM_CLKH-EM_CASIV)S}$ | Output hold time, EM_CLK rising to $\overline{EM_CAS}$ invalid | 1.15 | | | ns |
| 15 | $t_{d(EM_CLKH-EM_WEV)S}$ | Delay time, EM_CLK rising to $\overline{EM_WE}$ valid | | | 7.7 | ns |
| 16 | $t_{oh(EM_CLKH-EM_WEIV)S}$ | Output hold time, EM_CLK rising to $\overline{EM_WE}$ invalid | 1.15 | | | ns |
| 17 | $t_{dis(EM_CLKH-EM_DHZ)S}$ | Delay time, EM_CLK rising to EM_D[31:0] 3-stated | | 7.7 | | ns |
| 18 | $t_{ena(EM_CLKH-EM_DLZ)S}$ | Output hold time, EM_CLK rising to EM_D[31:0] driving | | 1.15 | | ns |

(1) For more information about supported EMIF frequency, see Table 2-1.


Copyright © 2014, Texas Instruments Incorporated

**Table 4-7. 133-MHz EMIF SDRAM Interface Timing Requirements(1)**

| NO. | PARAMETER | | MIN | TYP | MAX | UNIT |
|---|---|---|---|---|---|---|
| 19 | $t_{su(EM_DV\text{-}EM_CLKH)}$ | Input setup time, read data valid on D[31:0] before EM_CLK rising | 5 | | | ns |
| 20 | $t_{h(EM_CLKH\text{-}EM_DIV)}$ | Input hold time, read data valid on D[31:0] after EM_CLK rising | 1.9 | | | ns |

(1) For more information about supported EMIF frequency, see Table 2-1.

**Table 4-8. 133-MHz EMIF SDRAM Interface Switching Characteristics(1)**

| NO. | PARAMETER | | MIN | TYP | MAX | UNIT |
|---|---|---|---|---|---|---|
| 1 | $t_{c(EM_CLK)}$ | Cycle time, EMIF clock EM_CLK | 7.5 | | | ns |
| 2 | $t_{w(EM_CLK)}$ | Pulse width, EMIF clock EM_CLK high or low | 2.25 | | | ns |
| 3 | $t_{d(EM_CLKH\text{-}EM_CSV)S}$ | Delay time, EM_CLK rising to $\overline{EM_CS[0]}$ valid | | | 7.7 | ns |
| 4 | $t_{oh(EM_CLKH\text{-}EM_CSIV)S}$ | Output hold time, EM_CLK rising to $\overline{EM_CS[0]}$ invalid | 1.15 | | | ns |
| 5 | $t_{d(EM_CLKH\text{-}EM_WE\text{-}DQMV)S}$ | Delay time, EM_CLK rising to EM_$\overline{WE}$_DQM[3:0] valid | | | 7.7 | ns |
| 6 | $t_{oh(EM_CLKH\text{-}EM_WE\text{-}DQMIV)S}$ | Output hold time, EM_CLK rising to EM_$\overline{WE}$_DQM[3:0] invalid | -3 | | | ns |
| 7 | $t_{d(EM_CLKH\text{-}EM_AV)S}$ | Delay time, EM_CLK rising to EM_A[12:0] and EM_BA[1:0] valid | | | 7.7 | ns |
| 8 | $t_{oh(EM_CLKH\text{-}EM_AIV)S}$ | Output hold time, EM_CLK rising to EM_A[12:0] and EM_BA[1:0] invalid | -3 | | | ns |
| 9 | $t_{d(EM_CLKH\text{-}EM_DV)S}$ | Delay time, EM_CLK rising to EM_D[31:0] valid | | | 7.7 | ns |
| 10 | $t_{oh(EM_CLKH\text{-}EM_DIV)S}$ | Output hold time, EM_CLK rising to EM_D[31:0] invalid | -3 | | | ns |
| 11 | $t_{d(EM_CLKH\text{-}EM_RASV)S}$ | Delay time, EM_CLK rising to $\overline{EM_RAS}$ valid | | | 7.7 | ns |
| 12 | $t_{oh(EM_CLKH\text{-}EM_RASIV)S}$ | Output hold time, EM_CLK rising to $\overline{EM_RAS}$ invalid | 1.15 | | | ns |
| 13 | $t_{d(EM_CLKH\text{-}EM_CASV)S}$ | Delay time, EM_CLK rising to $\overline{EM_CAS}$ valid | | | 7.7 | ns |
| 14 | $t_{oh(EM_CLKH\text{-}EM_CASIV)S}$ | Output hold time, EM_CLK rising to $\overline{EM_CAS}$ invalid | 1.15 | | | ns |
| 15 | $t_{d(EM_CLKH\text{-}EM_WEV)S}$ | Delay time, EM_CLK rising to $\overline{EM_WE}$ valid | | | 7.7 | ns |
| 16 | $t_{oh(EM_CLKH\text{-}EM_WEIV)S}$ | Output hold time, EM_CLK rising to $\overline{EM_WE}$ invalid | 1.15 | | | ns |
| 17 | $t_{dis(EM_CLKH\text{-}EM_DHZ)S}$ | Delay time, EM_CLK rising to EM_D[31:0] 3-stated | | 7.7 | | ns |
| 18 | $t_{ena(EM_CLKH\text{-}EM_DLZ)S}$ | Output hold time, EM_CLK rising to EM_D[31:0] driving | | 1.15 | | ns |

(1) For more information about supported EMIF frequency, see Table 2-1.

Copyright © 2014, Texas Instruments Incorporated

**Table 4-9. EMIF Asynchronous Interface Timing Requirements(1) (2)**

| NO. | PARAMETER | | MIN | TYP | MAX | UNIT |
|---|---|---|---|---|---|---|
| 28 | $t_{su(EM_DV\text{-}EM_CLKH)A}$ | Input setup time, read data valid on EM_D[31:0] before EM_CLK rising | 11 | | | ns |
| 29 | $t_{h(EM_CLKH\text{-}EM_DIV)A}$ | Input hold time, read data valid on EM_D[31:0] after EM_CLK rising | 2 | | | ns |
| 30 | $t_{su(EM_CLKH\text{-}EM_WAITV)A}$ | Setup time, EM_WAIT valid before EM_CLK rising edge | 6 | | | ns |
| 31 | $t_{h(EM_CLKH\text{-}EM_WAITIV)A}$ | Hold time, EM_WAIT valid after EM_CLK rising edge | 0 | | | ns |
| 33 | $t_{w(EM_WAIT)A}$ | Pulse width of EM_WAIT assertion and deassertion | 2E + 5 | | | ns |
| 34 | $t_{d(EM_WAITD\text{-}HOLD)A}$ | Delay from EM_WAIT sampled deasserted on EM_CLK rising to beginning of HOLD phase | | | 4E(3) | ns |
| 35 | $t_{su(EM_WAITA\text{-}HOLD)A}$ | Setup before end of STROBE phase (if no extended wait states are inserted) by which EM_WAIT must be sampled asserted on EM_CLK rising in order to add extended wait states.(4) | 4E(3) | | | ns |

(1) E = SYSCLK3 (EM_CLK) period.
(2) These parameters apply to memories selected by $\overline{EM_CS[2]}$ in both normal and NAND modes.
(3) These parameters specify the number of EM_CLK cycles of latency between EM_WAIT being sampled at the device pin and the EMIF entering the HOLD phase. However, the asynchronous setup (parameter 30) and hold time (parameter 31) around each EM_CLK edge must also be met in order to ensure the EM_WAIT signal is correctly sampled.
(4) In Figure 4-13, it appears that there are more than 4 EM_CLK cycles encompassed by parameter 35. However, EM_CLK cycles that are part of the extended wait period should not be counted; the 4 EM_CLK requirement is to the start of where the HOLD phase would begin if there were no extended wait cycles.

**Table 4-10. EMIF Asynchronous Interface Switching Characteristics(1)**

| NO. | PARAMETER | | | MIN | TYP | MAX | UNIT |
|---|---|---|---|---|---|---|---|
| 1 | $t_{c(EM_CLK)}$ | Cycle time, EMIF clock EM_CLK | 100-MHz EMIF Frequency | 10 | | | ns |
| | | | 133-MHz EMIF Frequency | 7.5 | | | |
| 2 | $t_{w(EM_CLK)}$ | Pulse width, high or low, EMIF clock EM_CLK | | 3 | | | ns |
| 17 | $t_{dis(EM_CLKH\text{-}EM_DHZ)S}$ | Delay time, EM_CLK rising to EM_D[31:0] 3-stated | | | 7.7 | | ns |
| 18 | $t_{ena(EM_CLKH\text{-}EM_DLZ)S}$ | Output hold time, EM_CLK rising to EM_D[31:0] driving | | | 1.15 | | ns |
| 21 | $t_{d(EM_CLKH\text{-}EM_CS2V)A}$ | Delay time, from EM_CLK rising edge to $\overline{EM_CS[2]}$ valid | | 0 | | 8 | ns |
| 22 | $t_{d(EM_CLKH\text{-}EM_WE_DQMV)A}$ | Delay time, EM_CLK rising to EM_$\overline{WE}$_DQM[3:0] valid | | -2 | | 8 | ns |
| 23 | $t_{d(EM_CLKH\text{-}EM_AV)A}$ | Delay time, EM_CLK rising to EM_A[12:0] and EM_BA[1:0] valid | | -0.3 | | 8 | ns |
| 24 | $t_{d(EM_CLKH\text{-}EM_DV)A}$ | Delay time, EM_CLK rising to EM_D[31:0] valid | | -0.8 | | 8 | ns |
| 25 | $t_{d(EM_CLKH\text{-}EM_OEV)A}$ | Delay time, EM_CLK rising to $\overline{EM_OE}$ valid | | 0 | | 8 | ns |
| 26 | $t_{d(EM_CLKH\text{-}EM_RW)A}$ | Delay time, EM_CLK rising to EM_$\overline{RW}$ valid | | 0 | | 8 | ns |
| 27 | $t_{dis(EM_CLKH\text{-}EM_DDIS)A}$ | Delay time, EM_CLK rising to EM_D[31:0] 3-stated | | | 4 | | ns |
| 32 | $t_{d(EM_CLKH\text{-}EM_WE)A}$ | Delay time, EM_CLK rising to $\overline{EM_WE}$ valid | | 0 | | 8 | ns |

(1) These parameters apply to memories selected by $\overline{EM_CS[2]}$ in both normal and NAND modes.


Copyright © 2014, Texas Instruments Incorporated

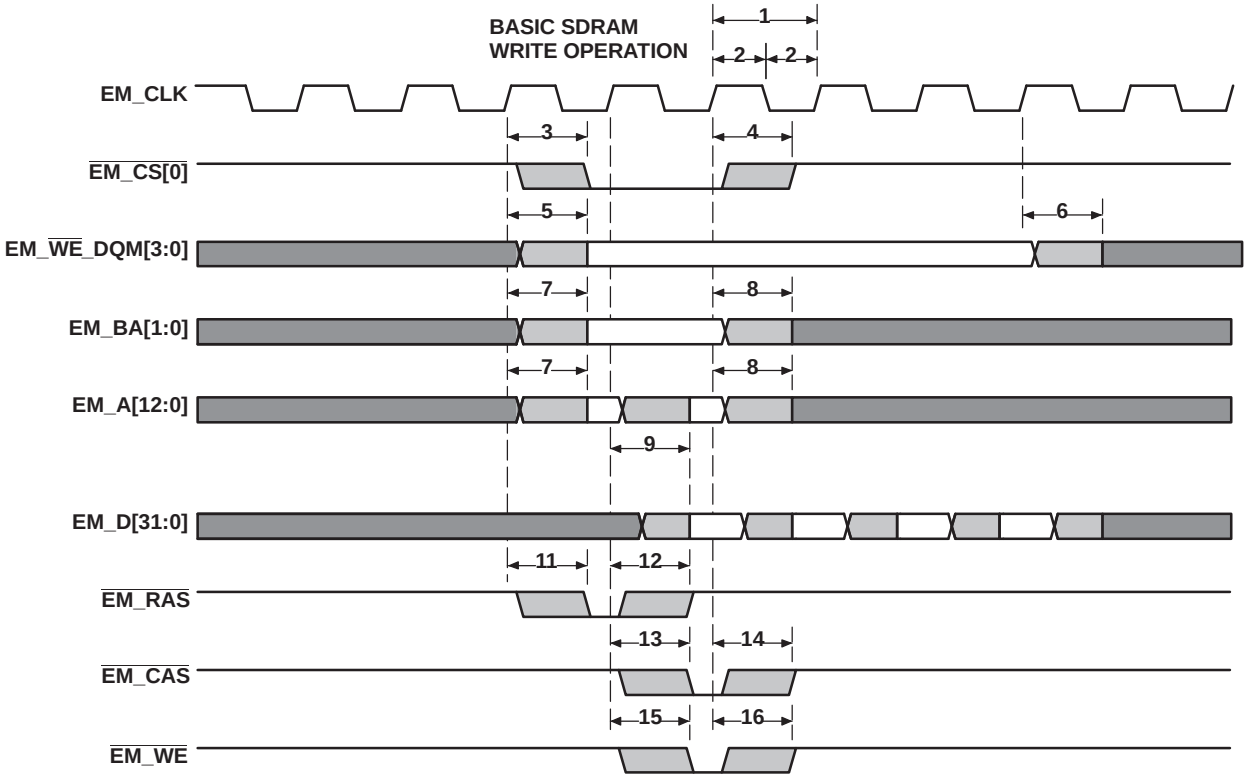


**Figure 4-7. Basic SDRAM Write Operation**

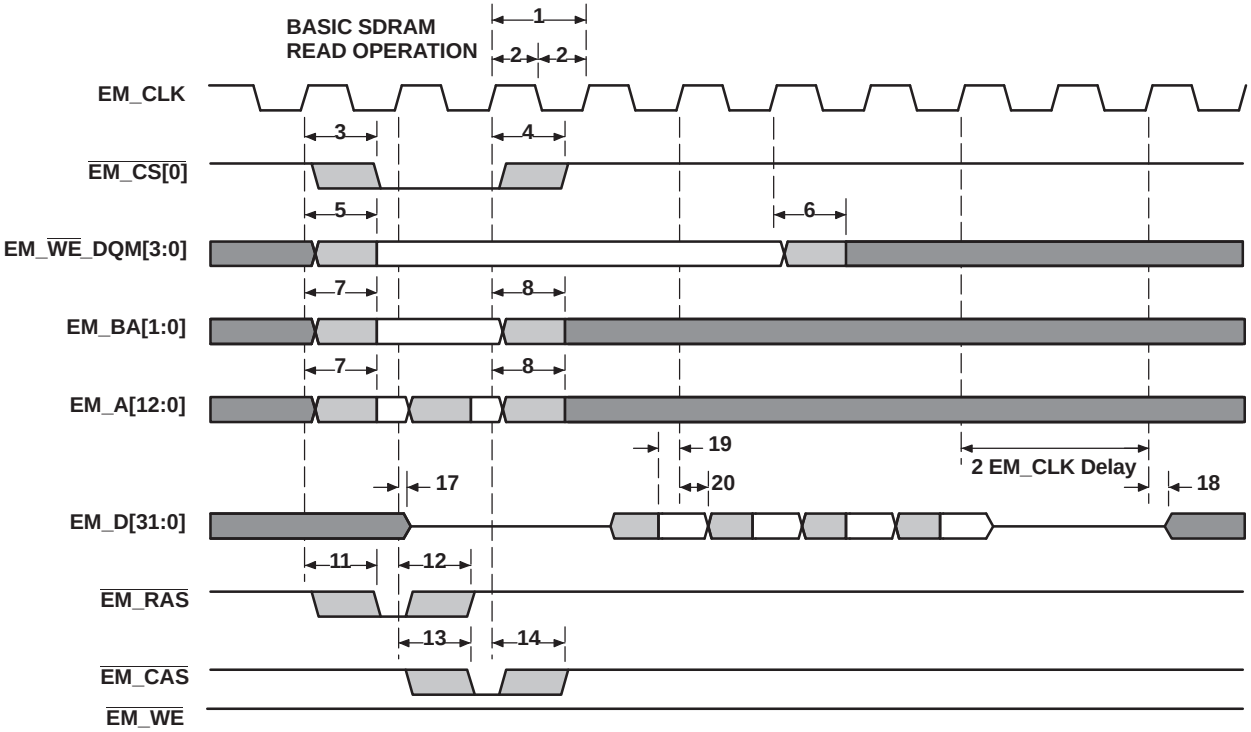


**Figure 4-8. Basic SDRAM Read Operation**

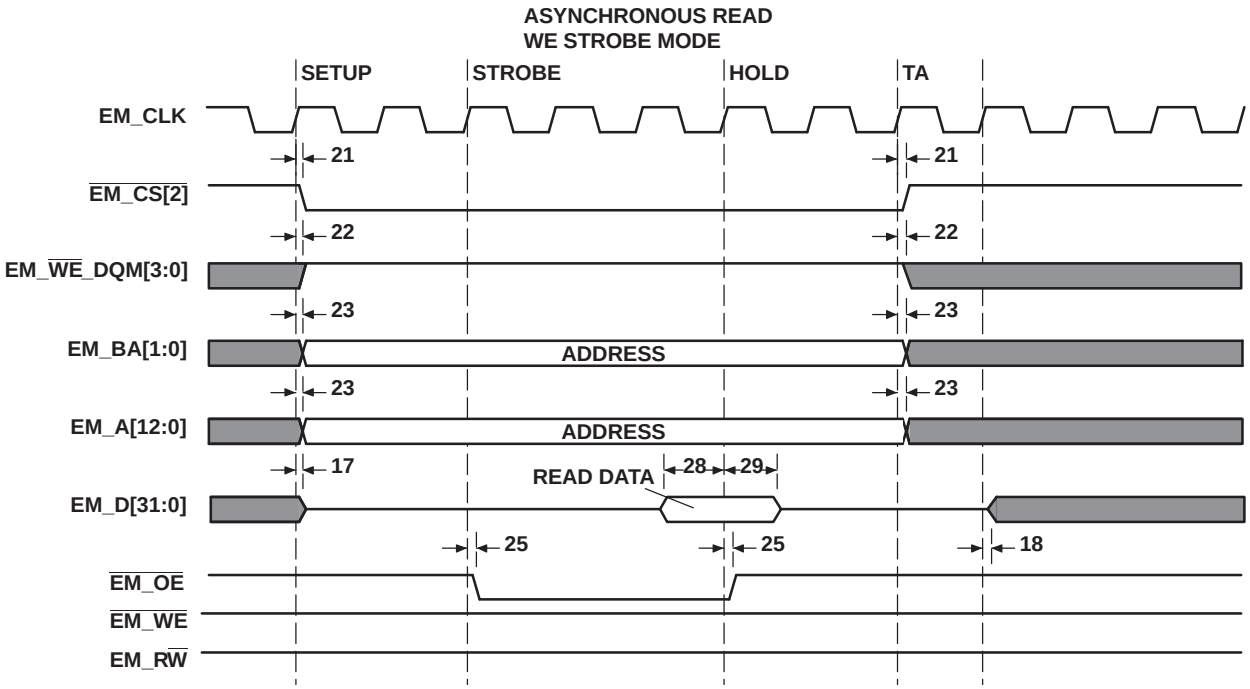


**Figure 4-9. Asynchronous Read WE Strobe Mode**

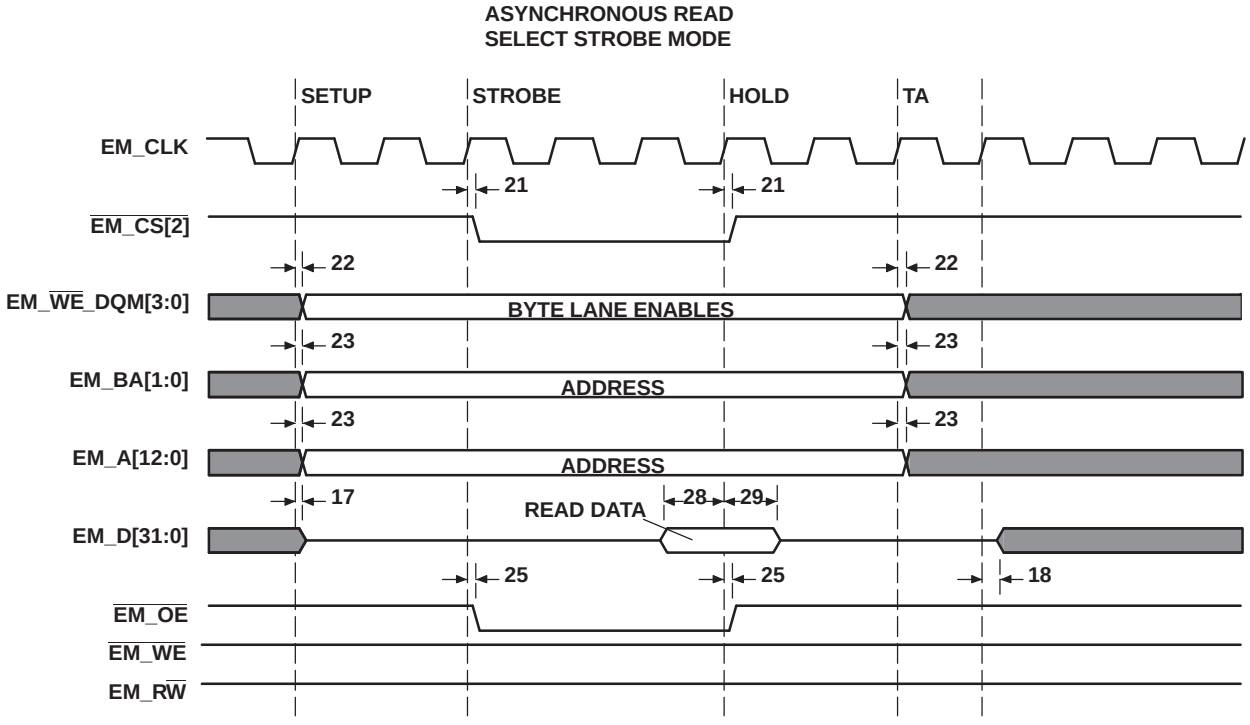


**Figure 4-10. Asynchronous Read Select Strobe Mode**


Copyright © 2014, Texas Instruments Incorporated

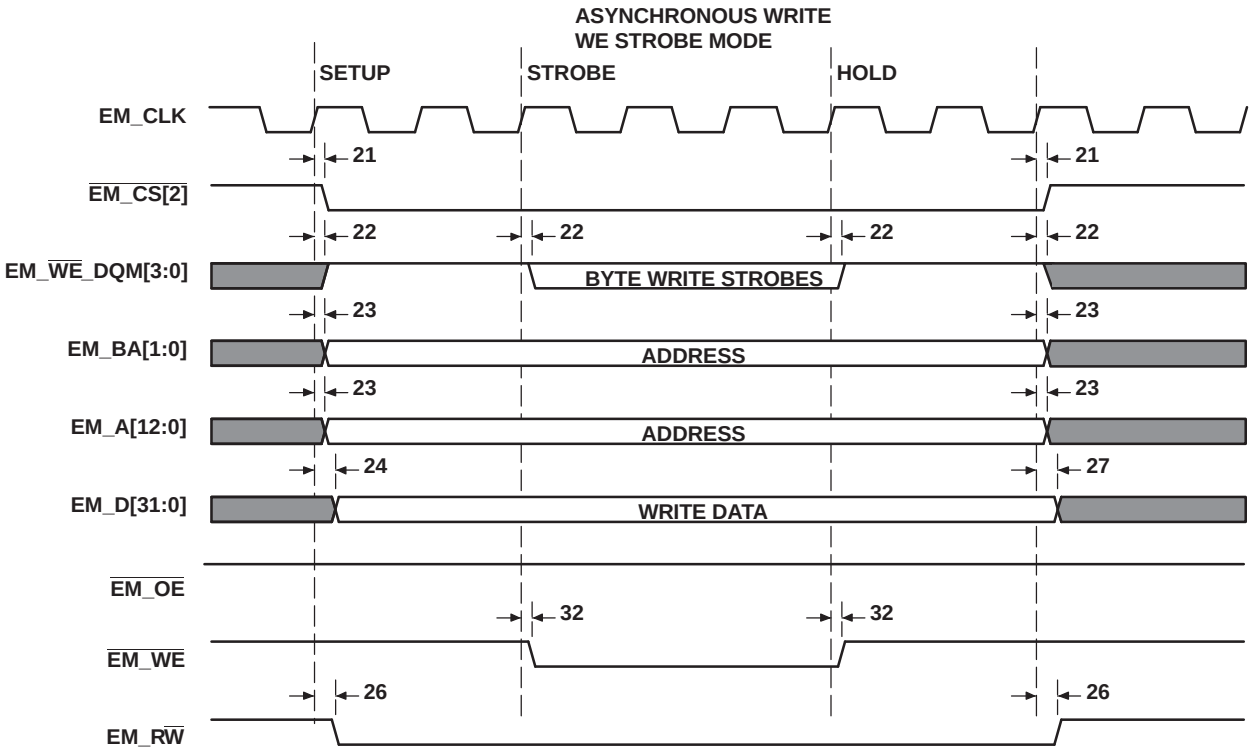


**Figure 4-11. Asynchronous Write WE Strobe Mode**

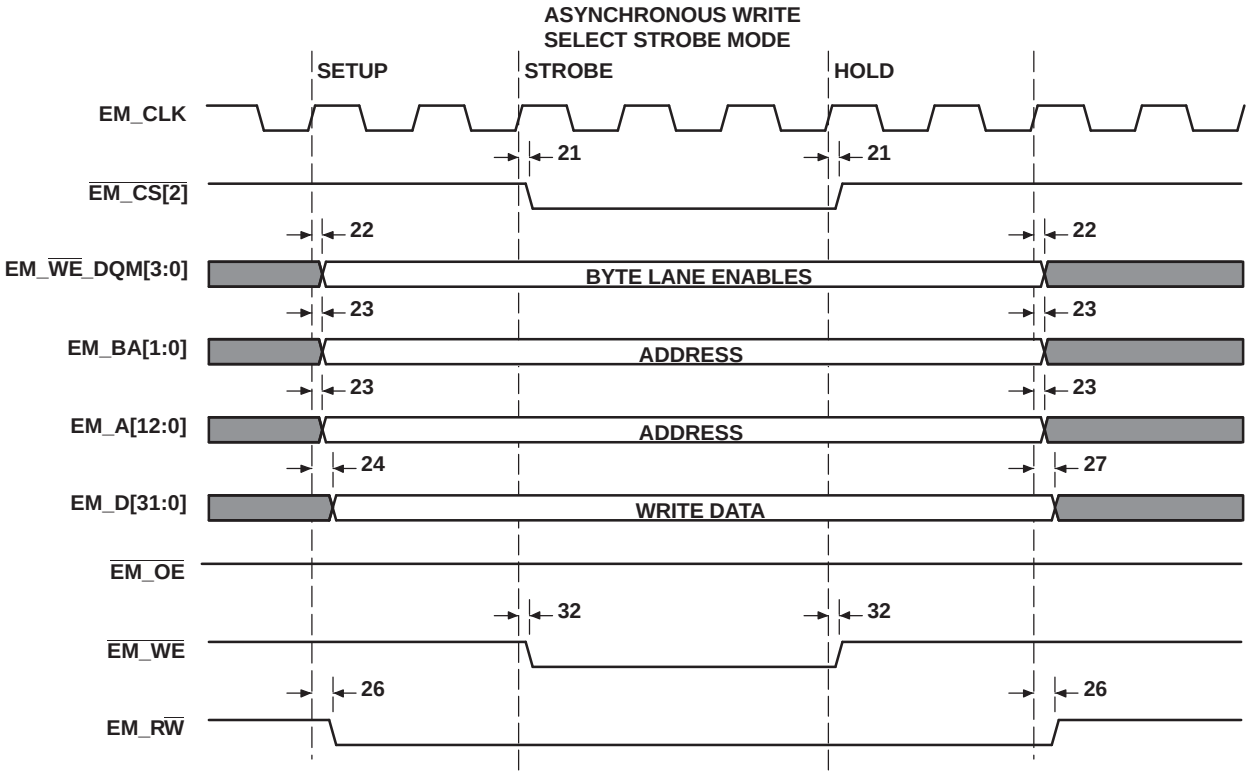


**Figure 4-12. Asynchronous Write Select Strobe Mode**

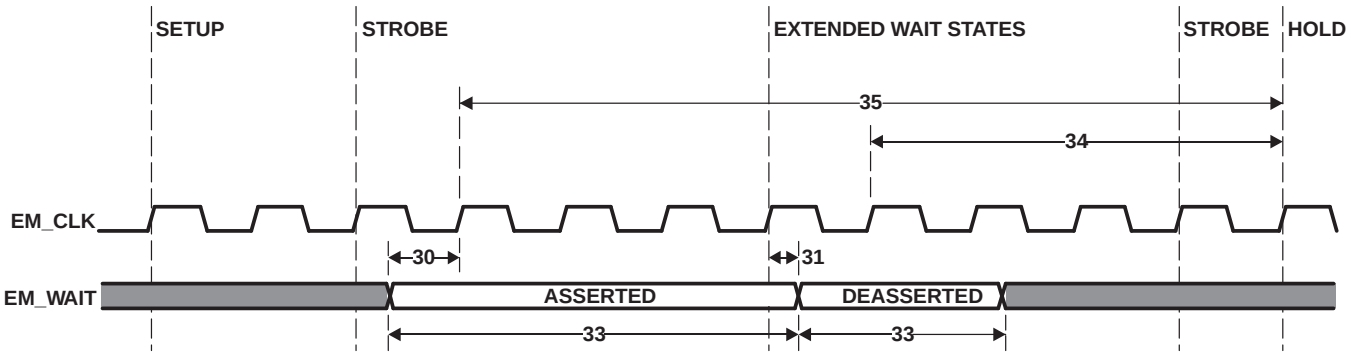


**Figure 4-13. EM_WAIT Timing Requirements**


Copyright © 2014, Texas Instruments Incorporated

## 4.12 Universal Host-Port Interface (UHPI) [C6727B Only]

### *4.12.1 UHPI Device-Specific Information*

The C6727B DSP includes a flexible universal host-port interface (UHPI) with more options than the host-port interface on the C671x DSP.

The UHPI on the C6727B DSP supports three major operating modes listed in Table 4-11.

**Table 4-11. UHPI Major Modes on C6727B**

| UHPI MAJOR MODE | EXAMPLE FIGURE |
|---|---|
| Multiplexed Host Address/Data Half-Word (16-Bit) Mode | Figure 4-15 |
| Multiplexed Host Address/Data Fullword (32-Bit) Mode | Figure 4-16 |
| Non-Multiplexed Host Address/Data Fullword (32-Bit) Mode | Figure 4-17 |

In all modes, the UHPI uses three select inputs (UHPI_HCS, UHPI_HDS[2:1]) which are combined internally to produce the internal strobe signal HSTROBE. The HSTROBE strobe signal is used in the UHPI to capture incoming address and control signals on its falling edge and write data on its rising edge. The UHPI_HCS signal also gates the deassertion of the UHPI_HRDY signal externally.

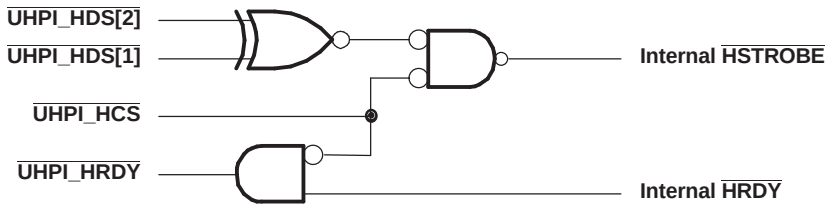


**Figure 4-14. UHPI Strobe and Ready Interaction**

The two HPI control pins UHPI_HCNTL[1:0] determine the type of access that the host will perform. Note that only two of the four access types are supported in Non-Multiplexed Host Address/Data Fullword Mode.

**Table 4-12. HPI Access Types Selected by UHPI_HCNTL[1:0]**

| UHPI_HCNTL[1:0] | DESCRIPTION | MULTIPLEXED HALF-WORD | MULTIPLEXED FULLWORD | NON-MULTIPLEXED FULLWORD |
|---|---|---|---|---|
| 00 | HPI Control Register (HPIC) Access | Y | Y | Y |
| 01 | HPI Data Access (HPID) with autoincrementing address | Y | Y | N |
| 10 | HPI Address Register (HPIA) Access | Y | Y | N |
| 11 | HPI Data Access (HPID) without autoincrementing address | Y | Y | Y |

**CAUTION**

When performing a set of HPID with autoincrementing address accesses (UHPI_HCNTL[1:0] = '01'), the set must begin and end at a word-aligned address. In addition, all four of the UHPI_HBE[3:0] must be enabled on every access in the set.

Copyright © 2014, Texas Instruments Incorporated

**CAUTION**

The encoding of UHPI_CNTL[1:0] on the C6727B DSP is different from HCNTL[1:0] on the C671x DSP. Modes 01 and 10 are swapped.

Figure 4-15 illustrates the Multiplexed Host Address/Data Half-Word Mode hookup between the C6727B DSP and an external host microcontroller. In this mode, each 32-bit HPI access is broken up into two halves. The UHPI_HD[16]/HHWIL pin functions as UHPI_HHWIL which must be '0' during the first half of access and '1' during the second half.

**CAUTION**

Unless configured as general-purpose I/O in the UHPI module, UHPI_HD[31:17] and UHPI_HD[16]/HHWIL will be driven as outputs along with UHPI_HD[15:0] when the HPI is read, even though only the lower half-word is used to transfer data. This can be especially problematic for the UHPI_HD[16]/HHWIL pin which should be used as an input in this mode. Therefore, be sure to configure the upper half of the UHPI_HD bus as general-purpose I/O pins. Furthermore, be sure to program the UHPI_HD[16] function as a general-purpose *input* to avoid a drive conflict with the external host MCU.

In this mode, as well as the Multiplexed Host Address/Data Fullword mode, the UHPI can be made more secure by restricting the upper 16 bits of the DSP addresses it can access to what is set in CFGHPIAMSB and CFGHPIAUMB registers. (See Table 4-15 and Table 4-16).

The host is responsible for configuring the internal HPIA register whether or not it is being overridden by the device configuration registers CFGHPIAMSB and CFGHPIAUMB.

After the HPIA register has been set, either a single or a group of autoincrementing accesses to HPID may be performed.

The $\overline{\text{UHPI_HRDY}}$ adds wait states to extend the host MCU access until the C6727B DSP has completed the desired operation.

The $\overline{\text{HINT}}$ signal is available for the DSP to interrupt the host MCU. The UHPI also includes an interrupt to the DSP core from the host as part of the HPIC register.


Copyright © 2014, Texas Instruments Incorporated

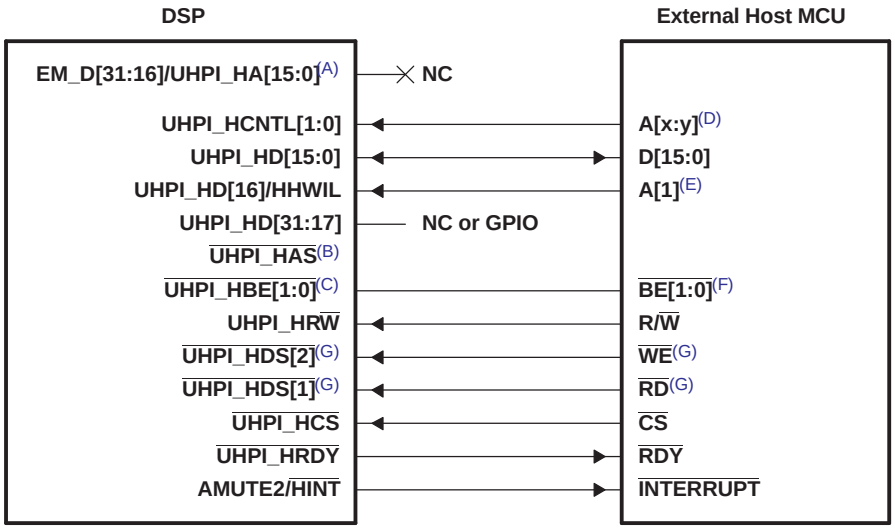


A. May be used as EM_D[31:16]
B. Optional for hosts supporting multiplexed address and data. Pull up if not used. Low when address is on the bus.
C. DSP byte enables UHPI_HBE[3:2] are not required in this mode.
D. Two host address lines ***or*** host GPIO if address lines are not available.
E. A[1], assuming this address increments from 0 to 1 between two successive 16-bit accesses.
F. Byte Enables (active during reads and writes). Some processors support a byte-enable mode on their write-enable pins.
G. Only required if needed for strobe timing. Not required if CS meets strobe timing requirements. Tie UHPI_HDS[2] and UHPI_HDS[1] opposite. For more information, see Figure 4-14.

**Figure 4-15. UHPI Multiplexed Host Address/Data Half-Word Mode**

Figure 4-16 illustrates the Multiplexed Host Address/Data Fullword Mode hookup between the C6727B DSP and an external host microcontroller. In this mode, all 32 bits of UHPI_HD[31:0] are used and the host can access HPIA, HPID, and HPIC in a single bus cycle.

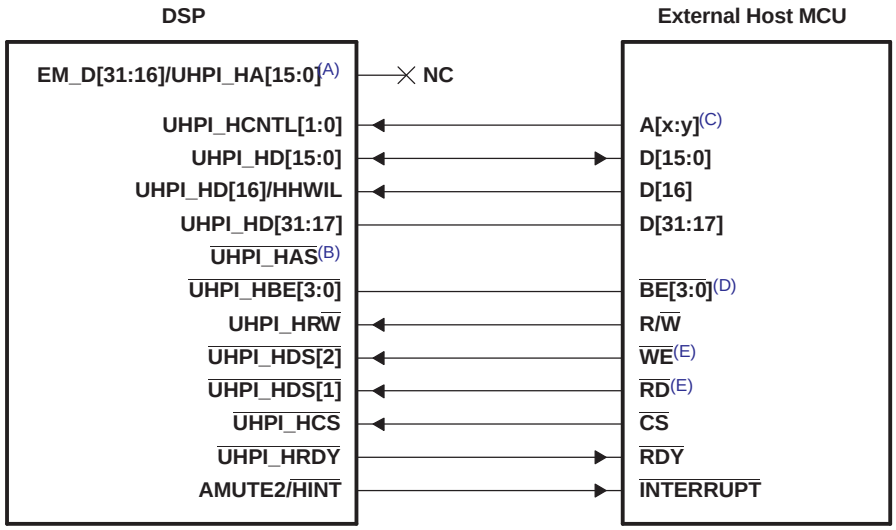


A. May be used as EM_D[31:16]
B. Optional for hosts supporting multiplexed address and data. Pull up if not used. Low when address is on the bus.
C. Two host address lines ***or*** host GPIO if address lines are not available.
D. Byte Enables (active during reads and writes). Some processors support a byte-enable mode on their write enable pins.
E. Only required if needed for strobe timing. Not required if $\overline{CS}$ meets strobe timing requirements.

**Figure 4-16. UHPI Multiplexed Host Address/Data Fullword Mode**


Copyright © 2014, Texas Instruments Incorporated

Figure 4-17 illustrates the Non-Multiplexed Host Address/Data Fullword mode of the UHPI. In this mode, the UHPI behaves almost like an asynchronous SRAM except it asserts the UHPI_HRDY signal. This mode allows the host to randomly access a 64K-byte page in the C6727B address space. The upper 32 bits of the C6727B address are set by the DSP (only) through the CFGHPIAMSB and CFGHPIAUMB registers (see Table 4-15 and Table 4-16).

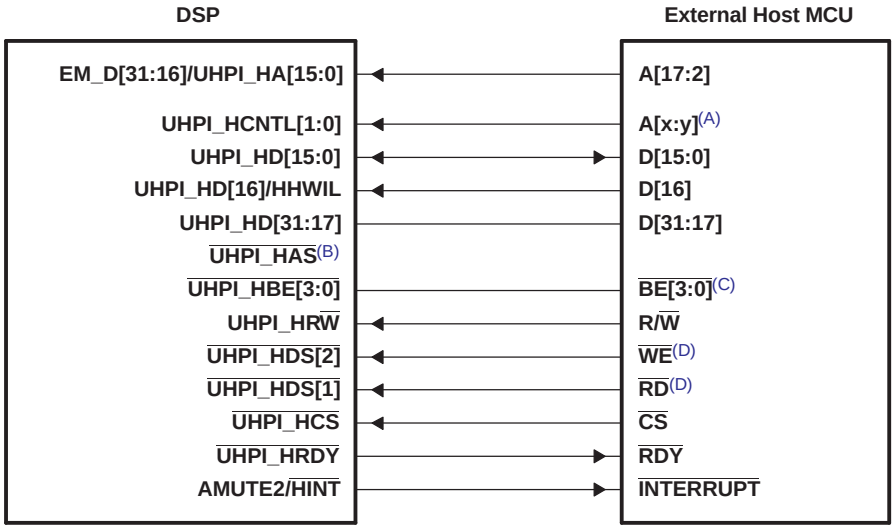


A. Two host address lines ***or*** host GPIO if address lines are not available.
B. Not used in this mode.
C. Byte Enables (active during reads and writes). Some processors support a byte-enable mode on their write enable pins.
D. Only required if needed for strobe timing. Not required if CS meets strobe timing requirements.

**Figure 4-17. UHPI Non-Multiplexed Host Address/Data Fullword Mode**

**CAUTION**

The EMIF data bus and UHPI HA inputs share the EM_D[31:16]/UHPI_HA[15:0] pins. When using Non-Multiplexed mode, make sure the EMIF does not drive EM_D[31:16]; otherwise, a drive conflict with the external host MCU may result. Normally, the EMIF will begin to drive the EM_D[31:16] lines immediately after it completes the SDRAM initialization sequence, which occurs automatically after RESET is released. To avoid a drive conflict then, the boot software must set CFGHPI.NMUX to '1' before the EMIF drives EM_D[31:16]. Setting CFGHPI.NMUX to '1' forces these pins to be input pins.

Copyright © 2014, Texas Instruments Incorporated

### 4.12.2 UHPI Peripheral Registers Description(s)

Table 4-13 is a list of the UHPI registers.

**Table 4-13. UHPI Configuration Registers**

| BYTE ADDRESS | REGISTER NAME | DESCRIPTION |
|---|---|---|
| **Device-Level Configuration Registers Controlling UHPI** | | |
| 0x4000 0008 | CFGHPI | UHPI Configuration Register |
| 0x4000 000C | CFGHPIAMSB | Most Significant Byte of UHPI Address |
| 0x4000 0010 | CFGHPIAUMB | Upper Middle Byte of UHPI Address |
| **UHPI Internal Registers** | | |
| 0x4300 0000 | PID | Peripheral ID Register |
| 0x4300 0004 | PWREMU | Power and Emulation Management Register |
| 0x4300 0008 | GPIOINT | General Purpose I/O Interrupt Control Register |
| 0x4300 000C | GPIOEN | General Purpose I/O Enable Register |
| 0x4300 0010 | GPIODIR1 | General Purpose I/O Direction Register 1 |
| 0x4300 0014 | GPIODAT1 | General Purpose I/O Data Register 1 |
| 0x4300 0018 | GPIODIR2 | General Purpose I/O Direction Register 2 |
| 0x4300 001C | GPIODAT2 | General Purpose I/O Data Register 2 |
| 0x4300 0020 | GPIODIR3 | General Purpose I/O Direction Register 3 |
| 0x4300 0024 | GPIODAT3 | General Purpose I/O Data Register 3 |
| 0x4300 0028 | Reserved | Reserved |
| 0x4300 002C | Reserved | Reserved |
| 0x4300 0030 | HPIC | Control Register |
| 0x4300 0034 | HPIAW | Write Address Register |
| 0x4300 0038 | HPIAR | Read Address Register |
| 0x4300 003C | Reserved | Reserved |
| 0x4300 0040 | Reserved | Reserved |


Copyright © 2014, Texas Instruments Incorporated

The UHPI has several device-level configuration registers which affect its behavior. Figure 4-18, Figure 4-19, and Figure 4-20 show the bit layout of these registers. Table 4-14, Table 4-15, and Table 4-16 contain a description of the bits in these registers.

| 31 | 8 |
|---|---|
| Reserved | |

| 7 | 5 | 4 | 3 | 2 | 1 | 0 |
|---|---|---|---|---|---|---|
| Reserved | | BYTEAD | FULL | NMUX | PAGEM | ENA |
| | | R/W, 0 | R/W, 0 | R/W, 0 | R/W, 0 | R/W, 0 |

LEGEND: R/W = Read/Write; R = Read only; -*n* = value after reset

**Figure 4-18. CFGHPI Register Bit Layout (0x4000 0008)**

**Table 4-14. CFGHPI Register Bit Field Description (0x4000 0008)**

| BIT NO. | NAME | RESET VALUE | READ WRITE | DESCRIPTION |
|---|---|---|---|---|
| 31:5 | Reserved | N/A | N/A | Reads are indeterminate. Only 0s should be written to these bits. |
| 4 | BYTEAD | 0 | R/W | UHPI Host Address Type<br>0 = Host Address is a word address<br>1 = Host Address is a byte address |
| 3 | FULL | 0 | R/W | UHPI Multiplexing Mode (when NMUX = 0)<br>0 = Half-Word (16-bit data) Multiplexed Address and Data Mode<br>1 = Fullword (32-bit data) Multiplexed Address and Data Mode |
| 2 | NMUX | 0 | R/W | UHPI Non-Multiplexed Mode Enable<br>0 = Multiplexed Address and Data Mode<br>1 = Non-Multiplexed Address and Data Mode (utilizes optional UHPI_HA[15:0] pins). Host data bus is 32 bits in Non-Multiplexed mode. Setting this bit prevents the EMIF from driving data out or 'parking' the shared EM_D[31:16]/UHPI_HA[15:0] pins. |
| 1 | PAGEM | 0 | R/W | UHPI Page Mode Enable (Only for Multiplexed Address and Data Mode).<br>0 = Full 32-bit DSP address specified through host port.<br>1 = Only lower 16 bits of DSP address are specified through host port. Upper 16 bits are restricted to the page selected by CFGHPIAMSB and CFGHPIAUMB registers. |
| 0 | ENA | 0 | R/W | UHPI Enable<br>0 = UHPI is disabled<br>1 = UHPI is enabled. Set this bit to '1' only after configuring the other bits in this register. |

Copyright © 2014, Texas Instruments Incorporated

| 31 | 8 |
|---|---|
| Reserved | |

| 7 | 0 |
|---|---|
| HPIAMSB | |
| R/W, 0 | |

LEGEND: R/W = Read/Write; R = Read only; -*n* = value after reset

**Figure 4-19. CFGHPIAMSB Register Bit Layout (0x4000 000C)**

**Table 4-15. CFGHPIAMSB Register Bit Field Description (0x4000 000C)**

| BIT NO. | NAME | RESET VALUE | READ WRITE | DESCRIPTION |
|---|---|---|---|---|
| 31:8 | Reserved | N/A | N/A | Reads are indeterminate. Only 0s should be written to these bits. |
| 7:0 | HPIAMSB | 0 | R/W | UHPI most significant byte of DSP address to access in Non-Multiplexed mode and in Multiplexed Address and Data mode when PAGEM = 1. Sets bits [31:24] of the DSP internal address as accessed through UHPI. |

| 31 | 8 |
|---|---|
| Reserved | |

| 7 | 0 |
|---|---|
| HPIAUMB | |
| R/W, 0 | |

LEGEND: R/W = Read/Write; R = Read only; -*n* = value after reset

**Figure 4-20. CFGHPIAUMB Register Bit Layout (0x4000 0010)**

**Table 4-16. CFGHPIAUMB Register Bit Field Description (0x4000 0010)**

| BIT NO. | NAME | RESET VALUE | READ WRITE | DESCRIPTION |
|---|---|---|---|---|
| 31:8 | Reserved | N/A | N/A | Reads are indeterminate. Only 0s should be written to these bits. |
| 7:0 | HPIAUMB | 0 | R/W | UHPI upper middle byte of DSP address to access in Non-Multiplexed mode and in Multiplexed Address and Data mode when PAGEM = 1. Sets bits [23:16] of the DSP internal address as accessed through UHPI. |


Copyright © 2014, Texas Instruments Incorporated

### 4.12.3 UHPI Electrical Data/Timing

#### 4.12.3.1 Universal Host-Port Interface (UHPI) Read and Write Timing

Table 4-17 and Table 4-18 assume testing over recommended operating conditions (see Figure 4-21 through Figure 4-24).

**Table 4-17. UHPI Read and Write Timing Requirements(1) (2)**

| NO. | PARAMETER | | MIN | TYP | MAX | UNIT |
|---|---|---|---|---|---|---|
| 9 | $t_{su(HASL-DSL)}$ | Setup time, $\overline{\text{UHPI_HAS}}$ low before DS falling edge | 6.5 | | | ns |
| 10 | $t_{h(DSL-HASL)}$ | Hold time, $\overline{\text{UHPI_HAS}}$ low after DS falling edge | 2 | | | ns |
| 11 | $t_{su(HAD-HASL)}$ | Setup time, HAD valid before $\overline{\text{UHPI_HAS}}$ falling edge | 6.5 | | | ns |
| 12 | $t_{h(HASL-HAD)}$ | Hold time, HAD valid after $\overline{\text{UHPI_HAS}}$ falling edge | 5 | | | ns |
| 13 | $t_{w(DSL)}$ | Pulse duration, DS low | 15 | | | ns |
| 14 | $t_{w(DSH)}$ | Pulse duration, DS high | 2P | | | ns |
| 15 | $t_{su(HAD-DSL)}$ | Setup time, HAD valid before DS falling edge | 5 | | | ns |
| 16 | $t_{h(DSL-HAD)}$ | Hold time, HAD valid after DS falling edge | 5 | | | ns |
| 17 | $t_{su(HD-DSH)}$ | Setup time, HD valid before DS rising edge | 7 | | | ns |
| 18 | $t_{h(DSH-HD)}$ | Hold time, HD valid after DS rising edge | 0 | | | ns |
| 37 | $t_{su(HCSL-DSL)}$ | Setup time, $\overline{\text{UHPI_HCS}}$ low before DS falling edge | 0.75 | | | ns |
| 38 | $t_{h(HRDYL-DSH)}$ | Hold time, DS high after $\overline{\text{UHPI_HRDY}}$ falling edge | 1 | | | ns |

(1) P = SYSCLK2 period
(2) DS refers to $\overline{\text{HSTROBE}}$. HD refers to UHPI_HD[31:0]. HDS refers to $\overline{\text{UHPI_HDS[1]}}$ or $\overline{\text{UHPI_HDS[2]}}$. HAD refers to UHPI_HCNTL[0], UHPI_HCNTL[1], UHPI_HHWIL, and UHPI_HRW.

Copyright © 2014, Texas Instruments Incorporated

## Table 4-18. UHPI Read and Write Switching Characteristics(1) (2)

| NO. | PARAMETER | | | MIN | TYP | MAX | UNIT |
|---|---|---|---|---|---|---|---|
| 1 | $t_{d(DSL-HDV)}$ | Delay time, DS low to HD valid | Case 1. HPIC or HPIA read | -1 | | 15 | ns |
| | | | Case 2. HPID read with no auto-increment | | | 9 * 2H + 20(3) | |
| | | | Case 3. HPID read with auto-increment and read FIFO initially empty | | | 9 * 2H + 20(3) | |
| | | | Case 4. HPID read with auto-increment and data previously prefetched into the read FIFO | -1.5 | | 15 | |
| 2 | $t_{dis(DSH-HDV)}$ | Disable time, HD high-impedance from DS high | | | 2.5 | | ns |
| 3 | $t_{en(DSL-HDD)}$ | Enable time, HD driven from DS low | | | 9 | | ns |
| 4 | $t_{d(DSL-HRDYH)}$ | Delay time, DS low to $\overline{\text{UHPI_HRDY}}$ high | | | | 14 | ns |
| 5 | $t_{d(DSH-HRDYH)}$ | Delay time, DS high to $\overline{\text{UHPI_HRDY}}$ high | | | | 14 | ns |
| 6 | $t_{d(DSL-HRDYL)}$ | Delay time, DS low to $\overline{\text{UHPI_HRDY}}$ low | Case 1. HPID read with no auto-increment | | | 10 * 2H + 20(3) | ns |
| | | | Case 2. HPID read with auto-increment and read FIFO initialy empty | | | 10 * 2H + 20(3) | |
| 7 | $t_{d(HDV-HRDYL)}$ | Delay time, HD valid to $\overline{\text{UHPI_HRDY}}$ low | | 0 | | | ns |
| 34 | $t_{d(DSH-HRDYL)}$ | Delay time, DS high to $\overline{\text{UHPI_HRDY}}$ low | Case 1. HPIA write | | | 5 * 2H + 20(3) | ns |
| | | | Case 2. HPID read with auto-increment and read FIFO initially empty | | | 5 * 2H + 20(3) | |
| 35 | $t_{d(DSL-HRDYL)}$ | Delay time, DS low to $\overline{\text{UHPI_HRDY}}$ low for HPIA write and FIFO not empty | | | | 40 * 2H + 20(3) | ns |
| 36 | $t_{d(HASL-HRDYH)}$ | Delay time, $\overline{\text{UHPI_HAS}}$ low to $\overline{\text{UHPI_HRDY}}$ high | | | | 12 | ns |

(1) H = 0.5 * SYSCLK2 period
(2) DS refers to $\overline{\text{HSTROBE}}$. HAD refers to UHPI_HCNTL[0], UHPI_HCNTL[1], UHPI_HHWIL, and UHPI_$\overline{\text{HRW}}$.
(3) Max delay is a best case, assuming no delays due to resource conflicts between UHPI and dMAX or CPU. $\overline{\text{UHPI_HRDY}}$ should always be used to indicate when an access is complete instead of relying on these parameters.


Copyright © 2014, Texas Instruments Incorporated

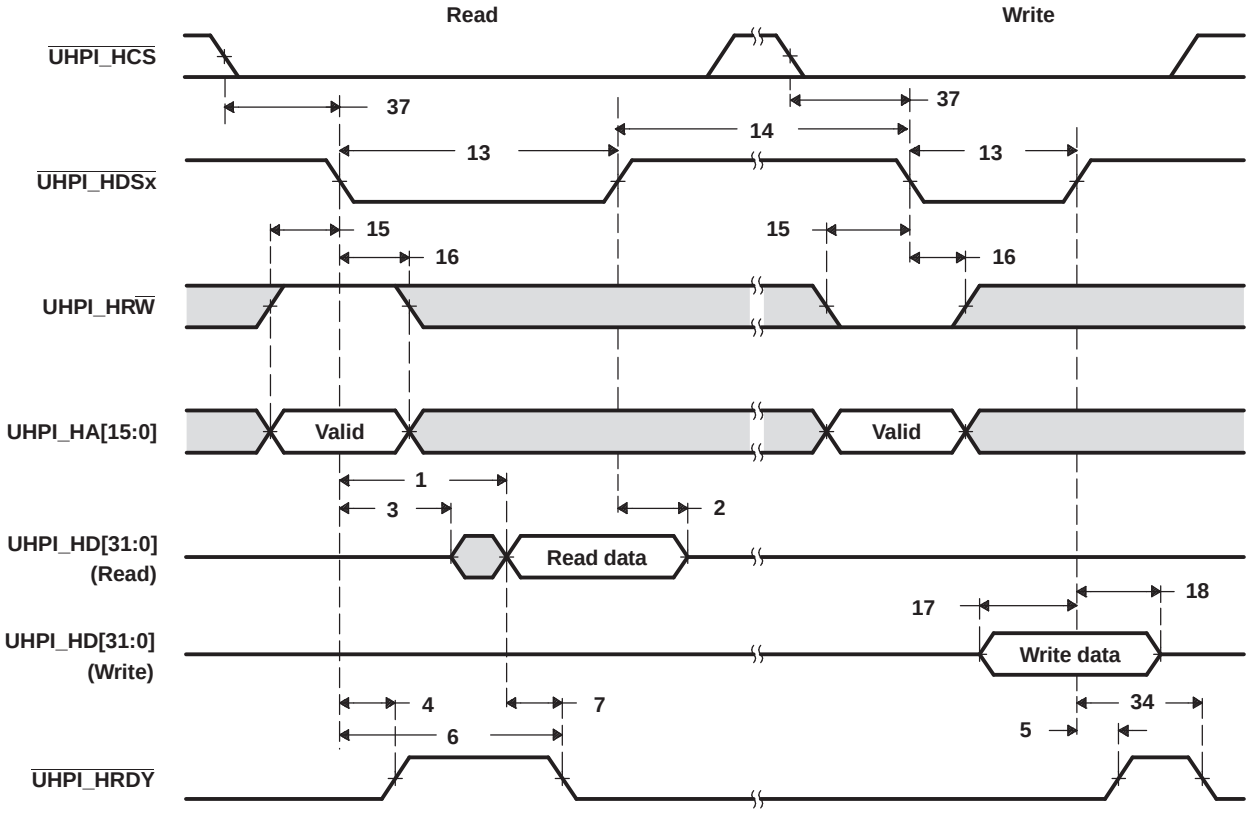


A. Depending on the type of write or read operation (HPID or HPIC), transitions on $\overline{\text{UHPI_HRDY}}$ may or may not occur.

**Figure 4-21. Non-Multiplexed Read/Write Timings**

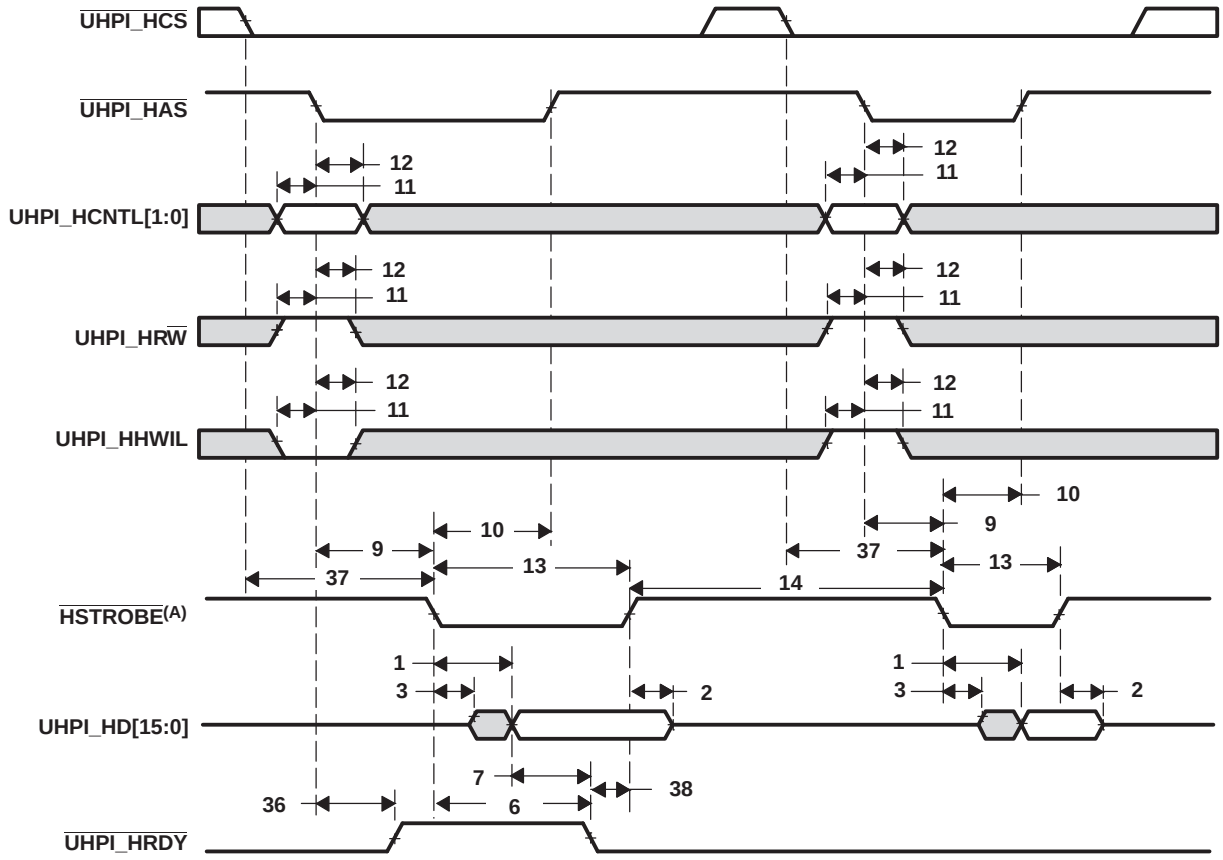


A. See Figure 4-14.

B. Depending on the type of write or read operation (HPID without auto-incrementing, HPIA, HPIC, or HPID with auto-incrementing) and the state of the FIFO, transitions on UHPI_HRDY may or may not occur.

**Figure 4-22. Multiplexed Read Timings Using UHPI_HAS**


Copyright © 2014, Texas Instruments Incorporated

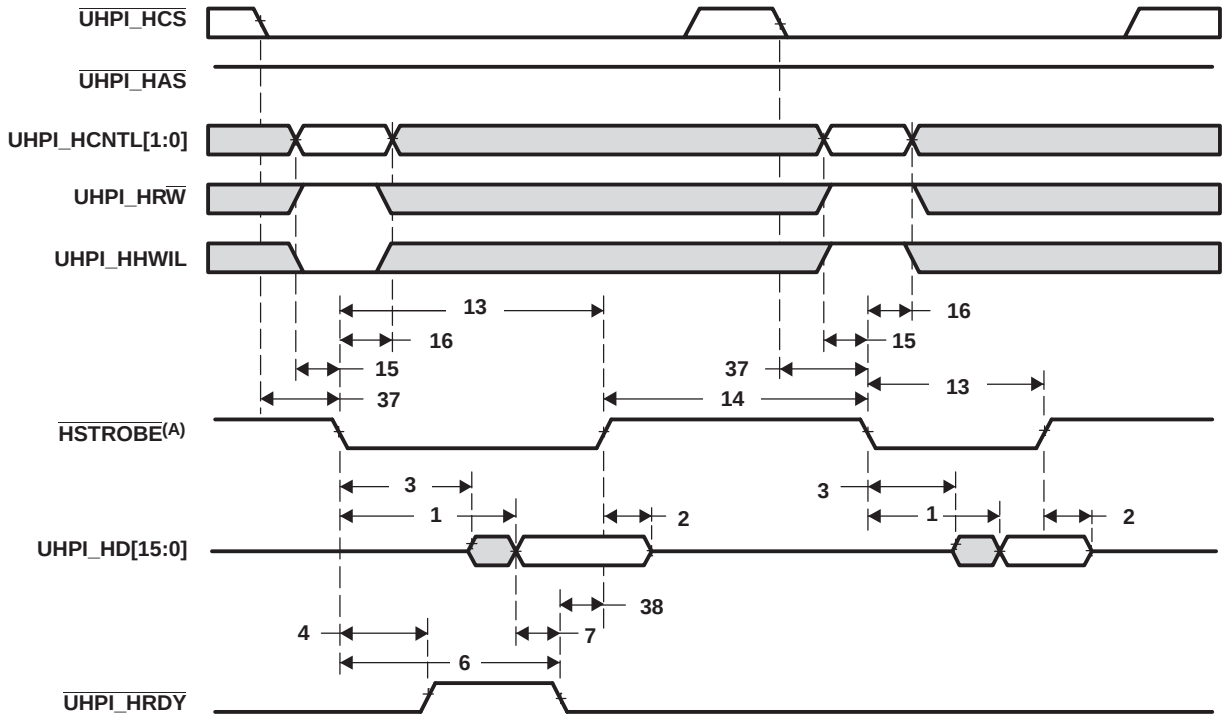


A. See Figure 4-14.

B. Depending on the type of write or read operation (HPID without auto-incrementing, HPIA, HPIC, or HPID with auto-incrementing) and the state of the FIFO, transitions on UHPI_HRDY may or may not occur.

**Figure 4-23. Multiplexed Read Timings With UHPI_HAS Held High**

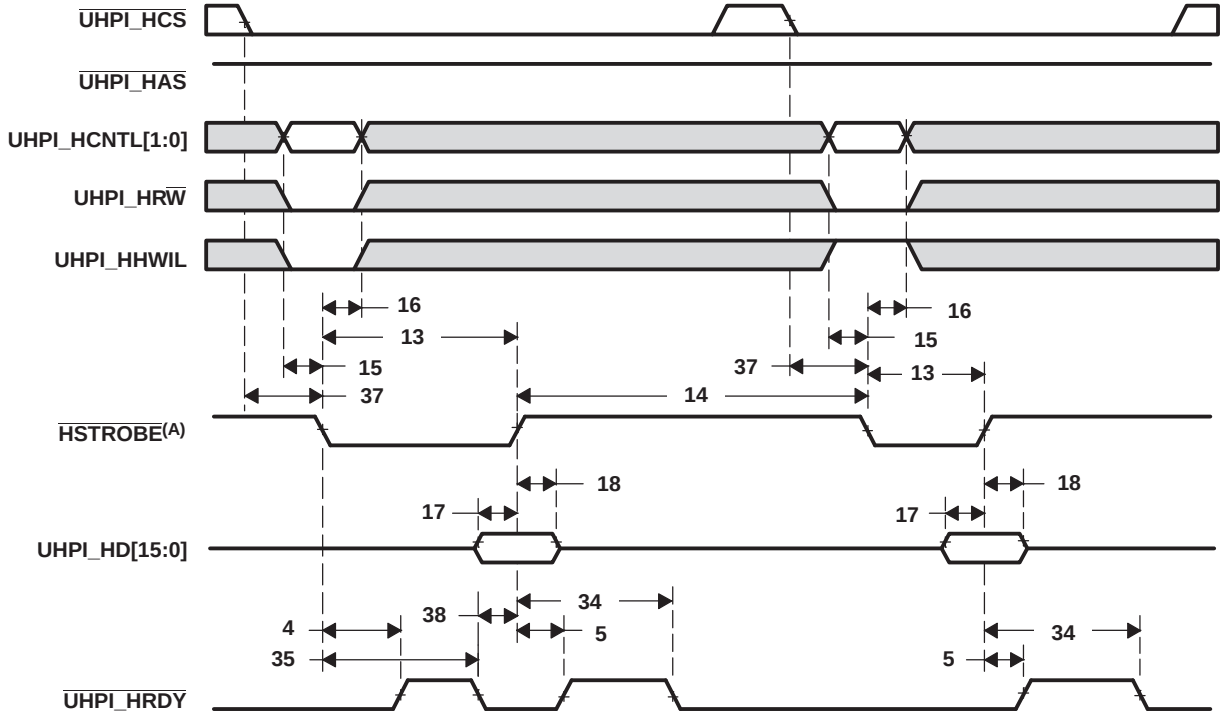


A. See Figure 4-14.

B. Depending on the type of write or read operation (HPID without auto-incrementing, HPIA, HPIC, or HPID with auto-incrementing) and the state of the FIFO, transitions on UHPI_HRDY may or may not occur.

**Figure 4-24. Multiplexed Write Timings With UHPI_HAS Held High**

## 4.13 Multichannel Audio Serial Ports (McASP0, McASP1, and McASP2)

The McASP serial port is specifically designed for multichannel audio applications. Its key features are:

- Flexible clock and frame sync generation logic and on-chip dividers
- Up to sixteen transmit or receive data pins and serializers
- Large number of serial data format options, including:
  - TDM Frames with 2 to 32 time slots per frame (periodic) or 1 slot per frame (burst).
  - Time slots of 8,12,16, 20, 24, 28, and 32 bits.
  - First bit delay 0, 1, or 2 clocks.
  - MSB or LSB first bit order.
  - Left- or right-aligned data words within time slots
- DIT Mode (optional) with 384-bit Channel Status and 384-bit User Data registers.
- Extensive error-checking and mute generation logic
- All unused pins GPIO-capable

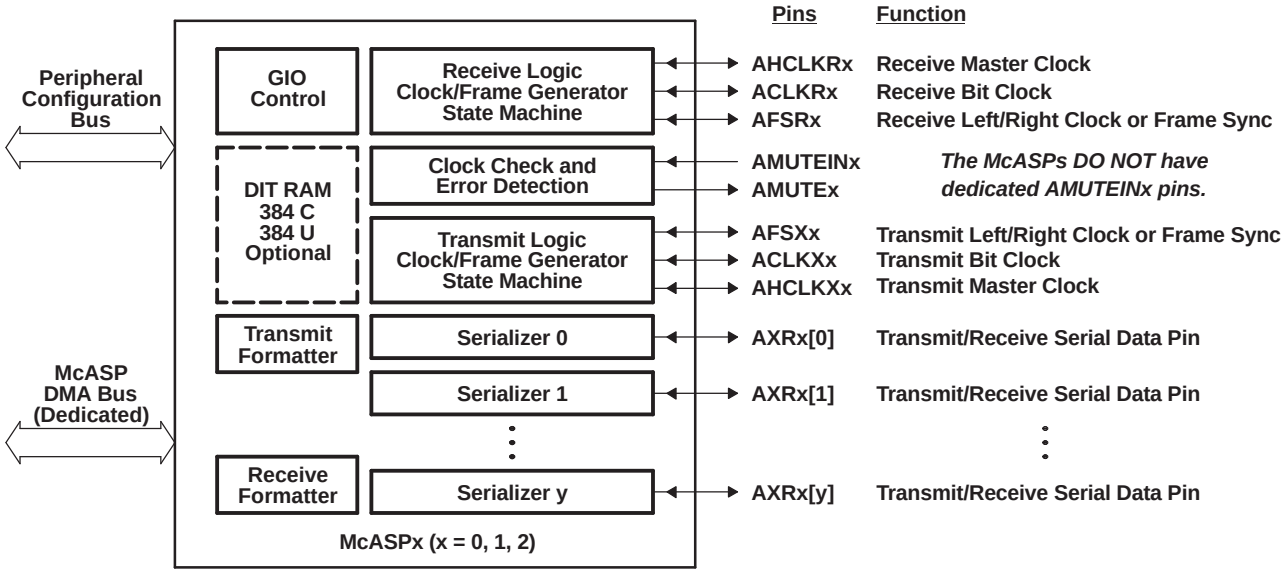


**Figure 4-25. McASP Block Diagram**


Copyright © 2014, Texas Instruments Incorporated

The three McASPs on C6727B have different configurations (see Table 4-19).

**Table 4-19. McASP Configurations on C6727B DSP**

| McASP | DIT | CLOCK PINS | DATA PINS | COMMENTS |
|---|---|---|---|---|
| McASP0 | No | AHCLKX0/AHCLKX2, ACLKX0, AFSX0 AHCLKR0/AHCLKR1, ACLKR0, AFSR0 | Up to 16 | AHCLKX0/AHCLKX2 share pin. AHCLKR0/AHCLKR1 share pin. |
| McASP1 | No | AHCLKX1, ACLKX1, AFSX1, ACLKR1, AFSR1 | Up to 6 | AHCLKR0/AHCLKR1 share pin |
| McASP2 | Yes | ACLKX2, AFSX2, AHCLKR2, ACLKR2, AFSR2 (Only available on the C6727B.) | Up to 2 | Full functionality on C6727B. On C6726B, functions only as DIT since only AHCLKX0/AHCLKX2 is available. |

**NOTE:** The McASPs ***do not*** have dedicated AMUTEINx pins. Instead they can select one of the pins listed in Table 4-21, Table 4-22, and Table 4-23 to use as a mute input.

Copyright © 2014, Texas Instruments Incorporated

### 4.13.1 McASP Peripheral Registers Description(s)

Table 4-20 is a list of the McASP registers. For more information about these registers, see the *TMS320C6727B DSP Multichannel Audio Serial Port (McASP) Reference Guide* (literature number SPRU878).

**Table 4-20. McASP Registers Accessed Through Peripheral Configuration Bus**

| McASP0 BYTE ADDRESS | McASP1 BYTE ADDRESS | McASP2 BYTE ADDRESS | REGISTER NAME | DESCRIPTION |
|---|---|---|---|---|
| **Device-Level Configuration Registers Controlling McASP** | | | | |
| 0x4000 0018 | 0x4000 001C | 0x4000 0020 | CFGMCASPx | Selects the peripheral pin to be used as AMUTEINx |
| **McASP Internal Registers** | | | | |
| 0x4400 0000 | 0x4500 0000 | 0x4600 0000 | PID | Peripheral identification register |
| 0x4400 0004 | 0x4500 0004 | 0x4600 0004 | PWRDEMU | Power down and emulation management register |
| 0x4400 0010 | 0x4500 0010 | 0x4600 0010 | PFUNC | Pin function register |
| 0x4400 0014 | 0x4500 0014 | 0x4600 0014 | PDIR | Pin direction register |
| 0x4400 0018 | 0x4500 0018 | 0x4600 0018 | PDOUT | Pin data output register |
| 0x4400 001C | 0x4500 001C | 0x4600 001C | PDIN (reads) | Read returns: Pin data input register |
| | | | PDSET (writes) | Writes affect: Pin data set register (alternate write address: PDOUT) |
| 0x4400 0020 | 0x4500 0020 | 0x4600 0020 | PDCLR | Pin data clear register (alternate write address: PDOUT) |
| 0x4400 0044 | 0x4500 0044 | 0x4600 0044 | GBLCTL | Global control register |
| 0x4400 0048 | 0x4500 0048 | 0x4600 0048 | AMUTE | Audio mute control register |
| 0x4400 004C | 0x4500 004C | 0x4600 004C | DLBCTL | Digital loopback control register |
| 0x4400 0050 | 0x4500 0050 | 0x4600 0050 | DITCTL | DIT mode control register |
| 0x4400 0060 | 0x4500 0060 | 0x4600 0060 | RGBLCTL | Receiver global control register: Alias of GBLCTL, only receive bits are affected - allows receiver to be reset independently from transmitter |
| 0x4400 0064 | 0x4500 0064 | 0x4600 0064 | RMASK | Receive format unit bit mask register |
| 0x4400 0068 | 0x4500 0068 | 0x4600 0068 | RFMT | Receive bit stream format register |
| 0x4400 006C | 0x4500 006C | 0x4600 006C | AFSRCTL | Receive frame sync control register |
| 0x4400 0070 | 0x4500 0070 | 0x4600 0070 | ACLKRCTL | Receive clock control register |
| 0x4400 0074 | 0x4500 0074 | 0x4600 0074 | AHCLKRCTL | Receive high-frequency clock control register |
| 0x4400 0078 | 0x4500 0078 | 0x4600 0078 | RTDM | Receive TDM time slot 0-31 register |
| 0x4400 007C | 0x4500 007C | 0x4600 007C | RINTCTL | Receiver interrupt control register |
| 0x4400 0080 | 0x4500 0080 | 0x4600 0080 | RSTAT | Receiver status register |
| 0x4400 0084 | 0x4500 0084 | 0x4600 0084 | RSLOT | Current receive TDM time slot register |
| 0x4400 0088 | 0x4500 0088 | 0x4600 0088 | RCLKCHK | Receive clock check control register |
| 0x4400 008C | 0x4500 008C | 0x4600 008C | REVTCTL | Receiver DMA event control register |
| 0x4400 00A0 | 0x4500 00A0 | 0x4600 00A0 | XGBLCTL | Transmitter global control register. Alias of GBLCTL, only transmit bits are affected - allows transmitter to be reset independently from receiver |
| 0x4400 00A4 | 0x4500 00A4 | 0x4600 00A4 | XMASK | Transmit format unit bit mask register |
| 0x4400 00A8 | 0x4500 00A8 | 0x4600 00A8 | XFMT | Transmit bit stream format register |
| 0x4400 00AC | 0x4500 00AC | 0x4600 00AC | AFSXCTL | Transmit frame sync control register |
| 0x4400 00B0 | 0x4500 00B0 | 0x4600 00B0 | ACLKXCTL | Transmit clock control register |
| 0x4400 00B4 | 0x4500 00B4 | 0x4600 00B4 | AHCLKXCTL | Transmit high-frequency clock control register |
| 0x4400 00B8 | 0x4500 00B8 | 0x4600 00B8 | XTDM | Transmit TDM time slot 0-31 register |
| 0x4400 00BC | 0x4500 00BC | 0x4600 00BC | XINTCTL | Transmitter interrupt control register |
| 0x4400 00C0 | 0x4500 00C0 | 0x4600 00C0 | XSTAT | Transmitter status register |
| 0x4400 00C4 | 0x4500 00C4 | 0x4600 00C4 | XSLOT | Current transmit TDM time slot register |


Copyright © 2014, Texas Instruments Incorporated

**Table 4-20. McASP Registers Accessed Through Peripheral Configuration Bus (continued)**

| McASP0 BYTE ADDRESS | McASP1 BYTE ADDRESS | McASP2 BYTE ADDRESS | REGISTER NAME | DESCRIPTION |
|---|---|---|---|---|
| 0x4400 00C8 | 0x4500 00C8 | 0x4600 00C8 | XCLKCHK | Transmit clock check control register |
| 0x4400 00CC | 0x4500 00CC | 0x4600 00CC | XEVTCTL | Transmitter DMA event control register |
| – | – | 0x4600 0100 | DITCSRA0 | Left channel status register 0 |
| – | – | 0x4600 0104 | DITCSRA1 | Left channel status register 1 |
| – | – | 0x4600 0108 | DITCSRA2 | Left channel status register 2 |
| – | – | 0x4600 010C | DITCSRA3 | Left channel status register 3 |
| – | – | 0x4600 0110 | DITCSRA4 | Left channel status register 4 |
| – | – | 0x4600 0114 | DITCSRA5 | Left channel status register 5 |
| – | – | 0x4600 0118 | DITCSRB0 | Right channel status register 0 |
| – | – | 0x4600 011C | DITCSRB1 | Right channel status register 1 |
| – | – | 0x4600 0120 | DITCSRB2 | Right channel status register 2 |
| – | – | 0x4600 0124 | DITCSRB3 | Right channel status register 3 |
| – | – | 0x4600 0128 | DITCSRB4 | Right channel status register 4 |
| – | – | 0x4600 012C | DITCSRB5 | Right channel status register 5 |
| – | – | 0x4600 0130 | DITUDRA0 | Left channel user data register 0 |
| – | – | 0x4600 0134 | DITUDRA1 | Left channel user data register 1 |
| – | – | 0x4600 0138 | DITUDRA2 | Left channel user data register 2 |
| – | – | 0x4600 013C | DITUDRA3 | Left channel user data register 3 |
| – | – | 0x4600 0140 | DITUDRA4 | Left channel user data register 4 |
| – | – | 0x4600 0144 | DITUDRA5 | Left channel user data register 5 |
| – | – | 0x4600 0148 | DITUDRB0 | Right channel user data register 0 |
| – | – | 0x4600 014C | DITUDRB1 | Right channel user data register 1 |
| – | – | 0x4600 0150 | DITUDRB2 | Right channel user data register 2 |
| – | – | 0x4600 0154 | DITUDRB3 | Right channel user data register 3 |
| – | – | 0x4600 0158 | DITUDRB4 | Right channel user data register 4 |
| – | – | 0x4600 015C | DITUDRB5 | Right channel user data register 5 |
| 0x4400 0180 | 0x4500 0180 | 0x4600 0180 | SRCTL0 | Serializer control register 0 |
| 0x4400 0184 | 0x4500 0184 | 0x4600 0184 | SRCTL1 | Serializer control register 1 |
| 0x4400 0188 | 0x4500 0188 | – | SRCTL2 | Serializer control register 2 |
| 0x4400 018C | 0x4500 018C | – | SRCTL3 | Serializer control register 3 |
| 0x4400 0190 | 0x4500 0190 | – | SRCTL4 | Serializer control register 4 |
| 0x4400 0194 | 0x4500 0194 | – | SRCTL5 | Serializer control register 5 |
| 0x4400 0198 | – | – | SRCTL6 | Serializer control register 6 |
| 0x4400 019C | – | – | SRCTL7 | Serializer control register 7 |
| 0x4400 01A0 | – | – | SRCTL8 | Serializer control register 8 |
| 0x4400 01A4 | – | – | SRCTL9 | Serializer control register 9 |
| 0x4400 01A8 | – | – | SRCTL10 | Serializer control register 10 |
| 0x4400 01AC | – | – | SRCTL11 | Serializer control register 11 |
| 0x4400 01B0 | – | – | SRCTL12 | Serializer control register 12 |
| 0x4400 01B4 | – | – | SRCTL13 | Serializer control register 13 |
| 0x4400 01B8 | – | – | SRCTL14 | Serializer control register 14 |
| 0x4400 01BC | – | – | SRCTL15 | Serializer control register 15 |
| 0x4400 0200 | 0x4500 0200 | 0x4600 0200 | XBUF0(1) | Transmit buffer register for serializer 0 |
| 0x4400 0204 | 0x4500 0204 | 0x4600 0204 | XBUF1(1) | Transmit buffer register for serializer 1 |
| 0x4400 0208 | 0x4500 0208 | – | XBUF2(1) | Transmit buffer register for serializer 2 |

(1) Writes to XRBUF originate from peripheral configuration bus only when XBUSEL = 1 in XFMT.

Copyright © 2014, Texas Instruments Incorporated

**Table 4-20. McASP Registers Accessed Through Peripheral Configuration Bus (continued)**

| McASP0 BYTE ADDRESS | McASP1 BYTE ADDRESS | McASP2 BYTE ADDRESS | REGISTER NAME | DESCRIPTION |
|---|---|---|---|---|
| 0x4400 020C | 0x4500 020C | – | XBUF3(1) | Transmit buffer register for serializer 3 |
| 0x4400 0210 | 0x4500 0210 | – | XBUF4(1) | Transmit buffer register for serializer 4 |
| 0x4400 0214 | 0x4500 0214 | – | XBUF5(1) | Transmit buffer register for serializer 5 |
| 0x4400 0218 | – | – | XBUF6(1) | Transmit buffer register for serializer 6 |
| 0x4400 021C | – | – | XBUF7(1) | Transmit buffer register for serializer 7 |
| 0x4400 0220 | – | – | XBUF8(1) | Transmit buffer register for serializer 8 |
| 0x4400 0224 | – | – | XBUF9(1) | Transmit buffer register for serializer 9 |
| 0x4400 0228 | – | – | XBUF10(1) | Transmit buffer register for serializer 10 |
| 0x4400 022C | – | – | XBUF11(1) | Transmit buffer register for serializer 11 |
| 0x4400 0230 | – | – | XBUF12(1) | Transmit buffer register for serializer 12 |
| 0x4400 0234 | – | – | XBUF13(1) | Transmit buffer register for serializer 13 |
| 0x4400 0238 | – | – | XBUF14(1) | Transmit buffer register for serializer 14 |
| 0x4400 023C | – | – | XBUF15(1) | Transmit buffer register for serializer 15 |
| 0x4400 0280 | 0x4500 0280 | 0x4600 0280 | RBUF0(2) | Receive buffer register for serializer 0 |
| 0x4400 0284 | 0x4500 0284 | 0x4600 0284 | RBUF1(3) | Receive buffer register for serializer 1 |
| 0x4400 0288 | 0x4500 0288 | – | RBUF2(3) | Receive buffer register for serializer 2 |
| 0x4400 028C | 0x4500 028C | – | RBUF3(3) | Receive buffer register for serializer 3 |
| 0x4400 0290 | 0x4500 0290 | – | RBUF4(3) | Receive buffer register for serializer 4 |
| 0x4400 0294 | 0x4500 0294 | – | RBUF5(3) | Receive buffer register for serializer 5 |
| 0x4400 0298 | – | – | RBUF6(3) | Receive buffer register for serializer 6 |
| 0x4400 029C | – | – | RBUF7(3) | Receive buffer register for serializer 7 |
| 0x4400 02A0 | – | – | RBUF8(3) | Receive buffer register for serializer 8 |
| 0x4400 02A4 | – | – | RBUF9(3) | Receive buffer register for serializer 9 |
| 0x4400 02A8 | – | – | RBUF10(3) | Receive buffer register for serializer 10 |
| 0x4400 02AC | – | – | RBUF11(3) | Receive buffer register for serializer 11 |
| 0x4400 02B0 | – | – | RBUF12(3) | Receive buffer register for serializer 12 |
| 0x4400 02B4 | – | – | RBUF13(3) | Receive buffer register for serializer 13 |
| 0x4400 02B8 | – | – | RBUF14(3) | Receive buffer register for serializer 14 |
| 0x4400 02BC | – | – | RBUF15(3) | Receive buffer register for serializer 15 |

(2) Reads from XRBUF originate on peripheral configuration bus only when RBUSEL = 1 in RFMT.
(3) Reads from XRBUF originate on peripheral configuration bus only when RBUSEL = 1 in RFMT.


Copyright © 2014, Texas Instruments Incorporated

Figure 4-26 shows the bit layout of the CFGMCASP0 register and Table 4-21 contains a description of the bits.

| 31 | 8 |
|---|---|
| Reserved | |

| 7 | 3 | 2 | 0 |
|---|---|---|---|
| Reserved | | AMUTEIN0 | |
| | | R/W, 0 | |

LEGEND: R/W = Read/Write; R = Read only; -*n* = value after reset

**Figure 4-26. CFGMCASP0 Register Bit Layout (0x4000 0018)**

**Table 4-21. CFGMCASP0 Register Bit Field Description (0x4000 0018)**

| BIT NO. | NAME | RESET VALUE | READ WRITE | DESCRIPTION |
|---|---|---|---|---|
| 31:3 | Reserved | N/A | N/A | Reads are indeterminate. Only 0s should be written to these bits. |
| 2:0 | AMUTEIN0 | 0 | R/W | AMUTEIN0 Selects the source of the input to the McASP0 mute input.<br>000 = Select the input to be a constant '0'<br>001 = Select the input from AXR0[7]/SPI1_CLK<br>010 = Select the input from AXR0[8]/AXR1[5]/SPI1_SOMI<br>011 = Select the input from AXR0[9]/AXR1[4]/SPI1_SIMO<br>100 = Select the input from AHCLKR2<br>101 = Select the input from SPI0_SIMO<br>110 = Select the input from SPI0_SCS/I2C1_SCL<br>111 = Select the input from SPI0_ENA/I2C1_SDA |

Copyright © 2014, Texas Instruments Incorporated

Figure 4-27 shows the bit layout of the CFGMCASP1 register and Table 4-22 contains a description of the bits.

| 31 | | | | | | | | 8 |
|---|---|---|---|---|---|---|---|---|
| Reserved | | | | | | | | |
| 7 | | | | | 3 | 2 | | 0 |
| Reserved | | | | | | AMUTEIN1 | | |
| | | | | | | R/W, 0 | | |

LEGEND: R/W = Read/Write; R = Read only; -*n* = value after reset

**Figure 4-27. CFGMCASP1 Register Bit Layout (0x4000 001C)**

**Table 4-22. CFGMCASP1 Register Bit Field Description (0x4000 001C)**

| BIT NO. | NAME | RESET VALUE | READ WRITE | DESCRIPTION |
|---|---|---|---|---|
| 31:3 | Reserved | N/A | N/A | Reads are indeterminate. Only 0s should be written to these bits. |
| 2:0 | AMUTEIN1 | 0 | R/W | AMUTEIN1 Selects the source of the input to the McASP1 mute input.<br>000 = Select the input to be a constant '0'<br>001 = Select the input from AXR0[7]/SPI1_CLK<br>010 = Select the input from AXR0[8]/AXR1[5]/SPI1_SOMI<br>011 = Select the input from AXR0[9]/AXR1[4]/SPI1_SIMO<br>100 = Select the input from AHCLKR2<br>101 = Select the input from SPI0_SIMO<br>110 = Select the input from SPI0_SCS/I2C1_SCL<br>111 = Select the input from SPI0_ENA/I2C1_SDA |


Copyright © 2014, Texas Instruments Incorporated

Figure 4-28 shows the bit layout of the CFGMCASP2 register and Table 4-23 contains a description of the bits.

| 31 | 8 |
|---|---|
| Reserved | |

| 7 | 3 | 2 | 0 |
|---|---|---|---|
| Reserved | | AMUTEIN2 | |
| | | R/W, 0 | |

LEGEND: R/W = Read/Write; R = Read only; -*n* = value after reset

**Figure 4-28. CFGMCASP2 Register Bit Layout (0x4000 0020)**

**Table 4-23. CFGMCASP2 Register Bit Field Description (0x4000 0020)**

| BIT NO. | NAME | RESET VALUE | READ WRITE | DESCRIPTION |
|---|---|---|---|---|
| 31:3 | Reserved | N/A | N/A | Reads are indeterminate. Only 0s should be written to these bits. |
| 2:0 | AMUTEIN2 | 0 | R/W | AMUTEIN2 Selects the source of the input to the McASP2 mute input.<br>000 = Select the input to be a constant '0'<br>001 = Select the input from AXR0[7]/SPI1_CLK<br>010 = Select the input from AXR0[8]/AXR1[5]/SPI1_SOMI<br>011 = Select the input from AXR0[9]/AXR1[4]/SPI1_SIMO<br>100 = Select the input from AHCLKR2<br>101 = Select the input from SPI0_SIMO<br>110 = Select the input from SPI0_SCS/I2C1_SCL<br>111 = Select the input from SPI0_ENA/I2C1_SDA |

Copyright © 2014, Texas Instruments Incorporated

### 4.13.2 McASP Electrical Data/Timing

#### 4.13.2.1 Multichannel Audio Serial Port (McASP) Timing

Table 4-24 and Table 4-25 assume testing over recommended operating conditions (see Figure 4-29 and Figure 4-30).

**Table 4-24. McASP Timing Requirements(1) (2)**

| NO. | PARAMETER | | MIN | TYP | MAX | UNIT |
|---|---|---|---|---|---|---|
| 1 | $t_{c(AHCKRX)}$ | Cycle time, AHCLKR external, AHCLKR input | 20 | | | ns |
| | | Cycle time, AHCLKX external, AHCLKX input | 20 | | | |
| 2 | $t_{w(AHCKRX)}$ | Pulse duration, AHCLKR external, AHCLKR input | 7.5 | | | ns |
| | | Pulse duration, AHCLKX external, AHCLKX input | 7.5 | | | |
| 3 | $t_{c(ACKRX)}$ | Cycle time, ACLKR external, ACLKR input | greater of 2P or 20 ns | | | ns |
| | | Cycle time, ACLKX external, ACLKX input | greater of 2P or 20 ns | | | |
| 4 | $t_{w(ACKRX)}$ | Pulse duration, ACLKR external, ACLKR input | 10 | | | ns |
| | | Pulse duration, ACLKX external, ACLKX input | 10 | | | |
| 5 | $t_{su(AFRXC-ACKRX)}$ | Setup time, AFSR input to ACLKR internal | 8 | | | ns |
| | | Setup time, AFSX input to ACLKX internal | 8 | | | |
| | | Setup time, AFSR input to ACLKR external input | 3 | | | |
| | | Setup time, AFSX input to ACLKX external input | 3 | | | |
| | | Setup time, AFSR input to ACLKR external output | 3 | | | |
| | | Setup time, AFSX input to ACLKX external output | 3 | | | |
| 6 | $t_{h(ACKRX-AFRX)}$ | Hold time, AFSR input after ACLKR internal | 0 | | | ns |
| | | Hold time, AFSX input after ACLKX internal | 0 | | | |
| | | Hold time, AFSR input after ACLKR external input | 3 | | | |
| | | Hold time, AFSX input after ACLKX external input | 3 | | | |
| | | Hold time, AFSR input after ACLKR external output | 3 | | | |
| | | Hold time, AFSX input after ACLKX external output | 3 | | | |
| 7 | $t_{su(AXR-ACKRX)}$ | Setup time, AXRn input to ACLKR internal | 8 | | | ns |
| | | Setup time, AXRn input to ACLKR external input | 3 | | | |
| | | Setup time, AXRn input to ACLKR external output | 3 | | | |
| 8 | $t_{h(ACKRX-AXR)}$ | Hold time, AXRn input after ACLKR internal | 3 | | | ns |
| | | Hold time, AXRn input after ACLKR external input | 3 | | | |
| | | Hold time, AXRn input after ACLKR external output | 3 | | | |

(1) ACLKX internal – ACLKXCTL.CLKXM = 1, PDIR.ACLKX = 1
ACLKX external input – ACLKXCTL.CLKXM = 0, PDIR.ACLKX = 0
ACLKX external output – ACLKXCTL.CLKXM = 0, PDIR.ACLKX = 1
ACLKR internal – ACLKRCTL.CLKRM = 1, PDIR.ACLKR =1
ACLKR external input – ACLKRCTL.CLKRM = 0, PDIR.ACLKR = 0
ACLKR external output – ACLKRCTL.CLKRM = 0, PDIR.ACLKR = 1
(2) P = SYSCLK2 period


Copyright © 2014, Texas Instruments Incorporated

**Table 4-25. McASP Switching Characteristics(1)**

| NO. | PARAMETER | | MIN | TYP | MAX | UNIT |
|---|---|---|---|---|---|---|
| 9 | $t_{c(AHCKRX)}$ | Cycle time, AHCLKR internal, AHCLKR output | 20 | | | ns |
| | | Cycle time, AHCLKR external, AHCLKR output | 20 | | | |
| | | Cycle time, AHCLKX internal, AHCLKX output | 20 | | | |
| | | Cycle time, AHCLKX external, AHCLKX output | 20 | | | |
| 10 | $t_{w(AHCKRX)}$ | Pulse duration, AHCLKR internal, AHCLKR output | (AHR/2) – 2.5(2) | | | ns |
| | | Pulse duration, AHCLKR external, AHCLKR output | (AHR/2) – 2.5(2) | | | |
| | | Pulse duration, AHCLKX internal, AHCLKX output | (AHX/2) – 2.5(3) | | | |
| | | Pulse duration, AHCLKX external, AHCLKX output | (AHX/2) – 2.5(3) | | | |
| 11 | $t_{c(ACKRX)}$ | Cycle time, ACLKR internal, ACLKR output | greater of 2P or 20 ns(4) | | | ns |
| | | Cycle time, ACLKR external, ACLKR output | greater of 2P or 20 ns(4) | | | |
| | | Cycle time, ACLKX internal, ACLKX output | greater of 2P or 20 ns(4) | | | |
| | | Cycle time, ACLKX external, ACLKX output | greater of 2P or 20 ns(4) | | | |
| 12 | $t_{w(ACKRX)}$ | Pulse duration, ACLKR internal, ACLKR output | (AR/2) – 2.5(5) | | | ns |
| | | Pulse duration, ACLKR external, ACLKR output | (AR/2) – 2.5(5) | | | |
| | | Pulse duration, ACLKX internal, ACLKX output | (AX/2) – 2.5(6) | | | |
| | | Pulse duration, ACLKX external, ACLKX output | (AX/2) – 2.5(6) | | | |
| 13 | $t_{d(ACKRX-FRX)}$ | Delay time, ACLKR internal, AFSR output | | | 5 | ns |
| | | Delay time, ACLKX internal, AFSX output | | | 5 | |
| | | Delay time, ACLKR external input, AFSR output | | | 10 | |
| | | Delay time, ACLKX external input, AFSX output | | | 10 | |
| | | Delay time, ACLKR external output, AFSR output | | | 10 | |
| | | Delay time, ACLKX external output, AFSX output | | | 10 | |
| | | Delay time, ACLKR internal, AFSR output | –2 | | | |
| | | Delay time, ACLKX internal, AFSX output | –2 | | | |
| | | Delay time, ACLKR external input, AFSR output | 0 | | | |
| | | Delay time, ACLKX external input, AFSX output | 0 | | | |
| | | Delay time, ACLKR external output, AFSR output | 0 | | | |
| | | Delay time, ACLKX external output, AFSX output | 0 | | | |
| 14 | $t_{d(ACLKX-AXRV)}$ | Delay time, ACLKX internal, AXRn output | | | 5 | ns |
| | | Delay time, ACLKX external input, AXRn output | | | 10 | |
| | | Delay time, ACLKX external output, AXRn output | | | 10 | |
| 15 | $t_{dis(ACKX-AXRHZ)}$ | Disable time, ACLKX internal, AXRn output | | 3.5 | | ns |
| | | Disable time, ACLKX external input, AXRn output | | 3.5 | | |
| | | Disable time, ACLKX external output, AXRn output | | 3.5 | | |

(1) ACLKX internal – ACLKXCTL.CLKXM = 1, PDIR.ACLKX = 1
ACLKX external input – ACLKXCTL.CLKXM = 0, PDIR.ACLKX = 0
ACLKX external output – ACLKXCTL.CLKXM = 0, PDIR.ACLKX = 1
ACLKR internal – ACLKRCTL.CLKRM = 1, PDIR.ACLKR =1
ACLKR external input – ACLKRCTL.CLKRM = 0, PDIR.ACLKR = 0
ACLKR external output – ACLKRCTL.CLKRM = 0, PDIR.ACLKR = 1
(2) AHR - Cycle time, AHCLKR.
(3) AHX - Cycle time, AHCLKX.
(4) P = SYSCLK2 period
(5) AR - ACLKR period.
(6) AX - ACLKX period.

Copyright © 2014, Texas Instruments Incorporated

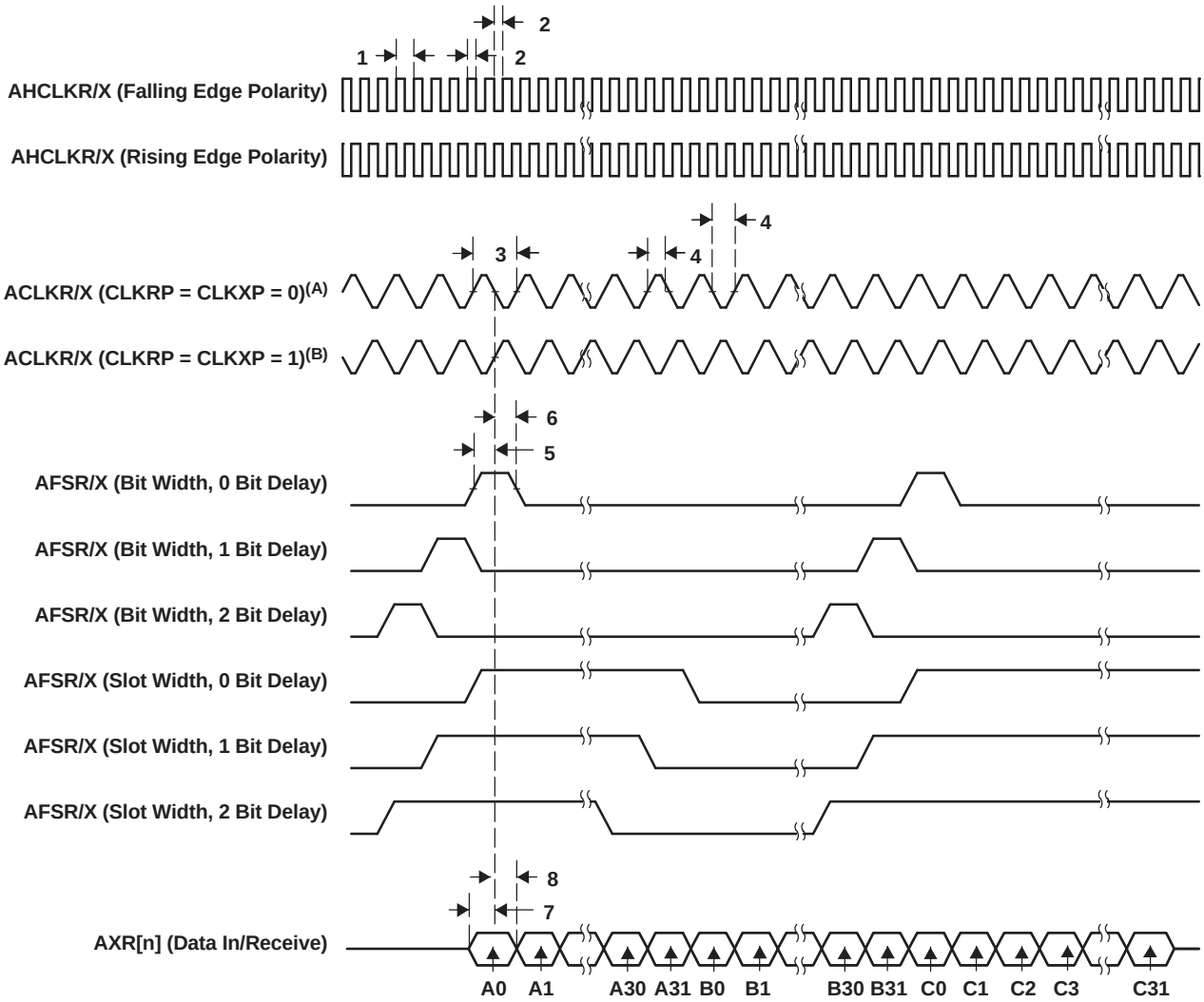


A. For CLKRP = CLKXP = 0, the McASP transmitter is configured for rising edge (to shift data out) and the McASP receiver is configured for falling edge (to shift data in).

B. For CLKRP = CLKXP = 1, the McASP transmitter is configured for falling edge (to shift data out) and the McASP receiver is configured for rising edge (to shift data in).

**Figure 4-29. McASP Input Timings**


Copyright © 2014, Texas Instruments Incorporated

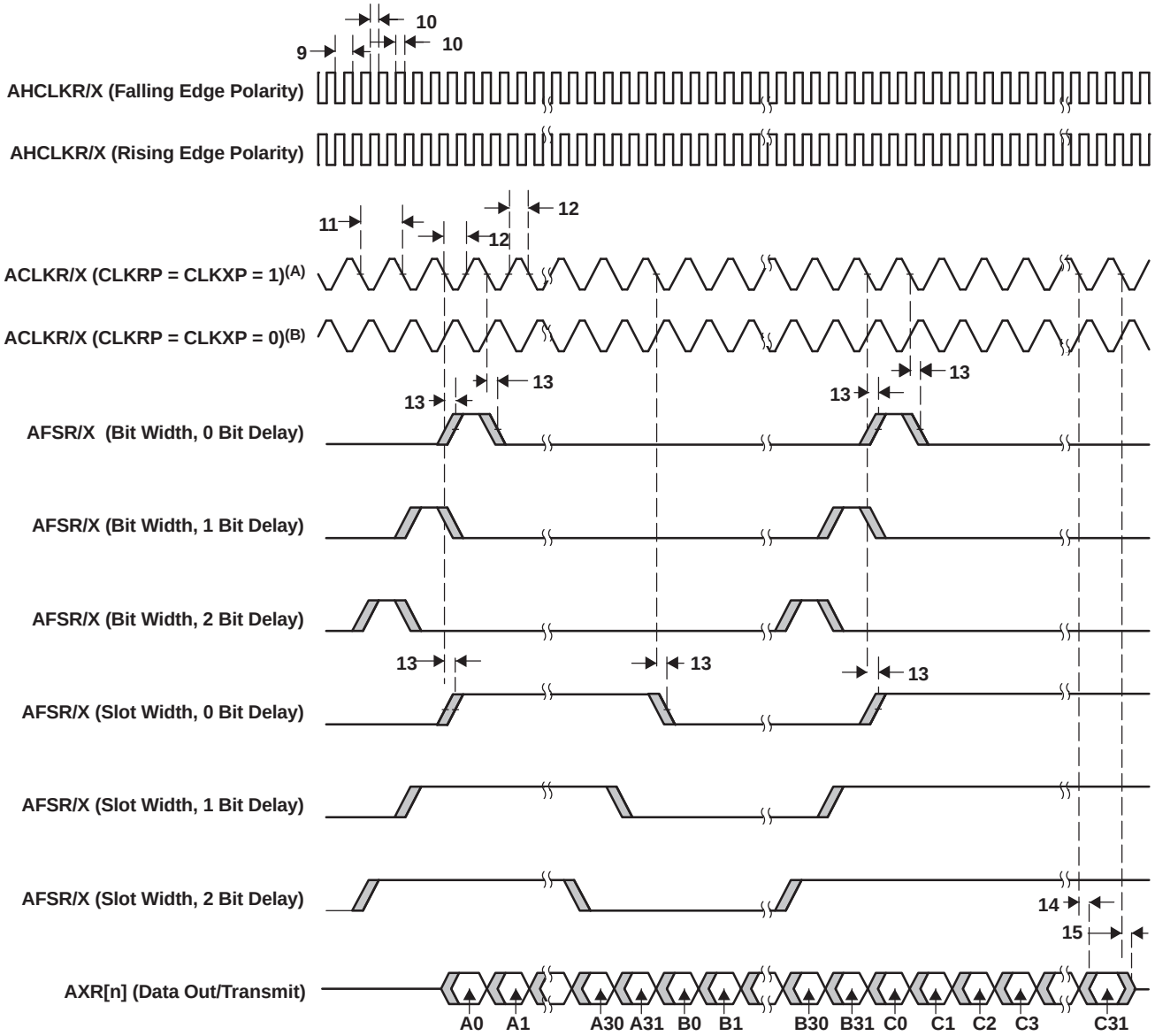


A. For CLKRP = CLKXP = 1, the McASP transmitter is configured for falling edge (to shift data out) and the McASP receiver is configured for rising edge (to shift data in).

B. For CLKRP = CLKXP = 0, the McASP transmitter is configured for rising edge (to shift data out) and the McASP receiver is configured for falling edge (to shift data in).

**Figure 4-30. McASP Output Timings**

## 4.14 Serial Peripheral Interface Ports (SPI0, SPI1)

### *4.14.1 SPI Device-Specific Information*

Figure 4-31 is a block diagram of the SPI module, which is a simple shift register and buffer plus control logic. Data is written to the shift register before transmission occurs and is read from the buffer at the end of transmission. The SPI can operate either as a master, in which case, it initiates a transfer and drives the SPIx_CLK pin, or as a slave. Four clock phase and polarity options are supported as well as many data formatting options.

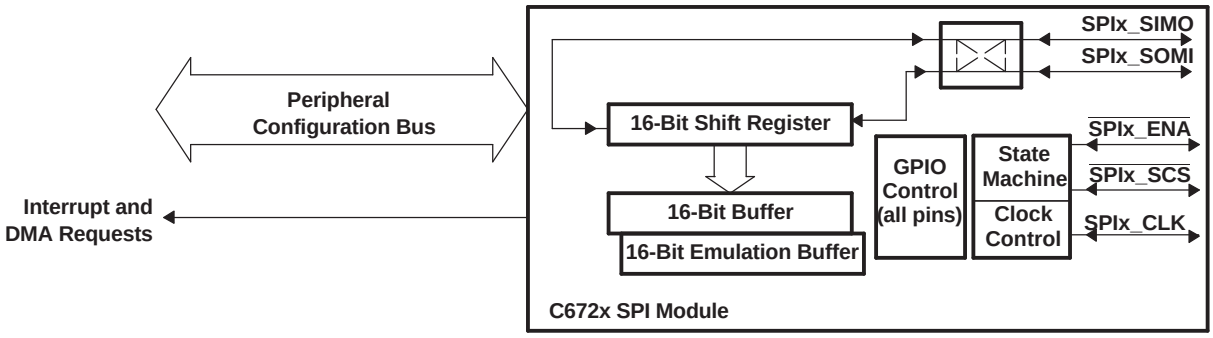


**Figure 4-31. Block Diagram of SPI Module**

The SPI supports 3-, 4-, and 5-pin operation with three basic pins (SPIx_CLK, SPIx_SIMO, and SPIx_SOMI) and two optional pins ($\overline{\text{SPIx_SCS}}$, $\overline{\text{SPIx_ENA}}$).

The optional $\overline{\text{SPIx_SCS}}$ (Slave Chip Select) pin is most useful to enable in slave mode when there are other slave devices on the same SPI port. The C6727B will only shift data and drive the SPIx_SOMI pin when $\overline{\text{SPIx_SCS}}$ is held low.

In slave mode, $\overline{\text{SPIx_ENA}}$ is an optional output and can be driven in either a push-pull or open-drain manner. The $\overline{\text{SPIx_ENA}}$ output provides the status of the internal transmit buffer (SPIDAT0/1 registers). In four-pin mode with the enable option, $\overline{\text{SPIx_ENA}}$ is asserted only when the transmit buffer is full, indicating that the slave is ready to begin another transfer. In five-pin mode, the $\overline{\text{SPIx_ENA}}$ is additionally qualified by $\overline{\text{SPIx_SCS}}$ being asserted. This allows a single handshake line to be shared by multiple slaves on the same SPI bus.

In master mode, the $\overline{\text{SPIx_ENA}}$ pin is an optional input and the master can be configured to delay the start of the next transfer until the slave asserts $\overline{\text{SPIx_ENA}}$. The addition of this handshake signal simplifies SPI communications and, on average, increases SPI bus throughput since the master does not need to delay each transfer long enough to allow for the worst-case latency of the slave device. Instead, each transfer can begin as soon as both the master and slave have actually serviced the previous SPI transfer.


Copyright © 2014, Texas Instruments Incorporated

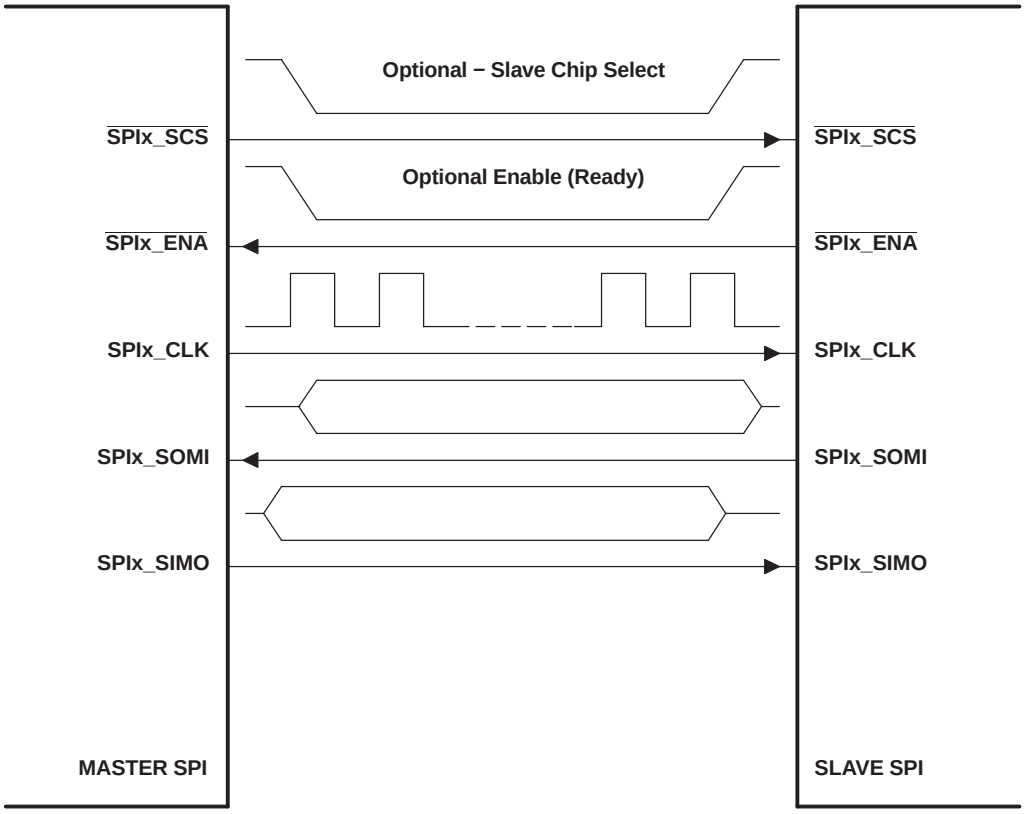


**Figure 4-32. Illustration of SPI Master-to-SPI Slave Connection**

### 4.14.2 SPI Peripheral Registers Description(s)

Table 4-26 is a list of the SPI registers.

**Table 4-26. SPIx Configuration Registers**

| SPI0 BYTE ADDRESS | SPI1 BYTE ADDRESS | REGISTER NAME | DESCRIPTION |
|---|---|---|---|
| 0x4700 0000 | 0x4800 0000 | SPIGCR0 | Global Control Register 0 |
| 0x4700 0004 | 0x4800 0004 | SPIGCR1 | Global Control Register 1 |
| 0x4700 0008 | 0x4800 0008 | SPIINT0 | Interrupt Register |
| 0x4700 000C | 0x4800 000C | SPILVL | Interrupt Level Register |
| 0x4700 0010 | 0x4800 0010 | SPIFLG | Flag Register |
| 0x4700 0014 | 0x4800 0014 | SPIPC0 | Pin Control Register 0 (Pin Function) |
| 0x4700 0018 | 0x4800 0018 | SPIPC1 | Pin Control Register 1 (Pin Direction) |
| 0x4700 001C | 0x4800 001C | SPIPC2 | Pin Control Register 2 (Pin Data In) |
| 0x4700 0020 | 0x4800 0020 | SPIPC3 | Pin Control Register 3 (Pin Data Out) |
| 0x4700 0024 | 0x4800 0024 | SPIPC4 | Pin Control Register 4 (Pin Data Set) |
| 0x4700 0028 | 0x4800 0028 | SPIPC5 | Pin Control Register 5 (Pin Data Clear) |
| 0x4700 002C | 0x4800 002C | Reserved | Reserved - Do not write to this register |
| 0x4700 0030 | 0x4800 0030 | Reserved | Reserved - Do not write to this register |
| 0x4700 0034 | 0x4800 0034 | Reserved | Reserved - Do not write to this register |
| 0x4700 0038 | 0x4800 0038 | SPIDAT0 | Shift Register 0 (without format select) |
| 0x4700 003C | 0x4800 003C | SPIDAT1 | Shift Register 1 (with format select) |
| 0x4700 0040 | 0x4800 0040 | SPIBUF | Buffer Register |
| 0x4700 0044 | 0x4800 0044 | SPIEMU | Emulation Register |
| 0x4700 0048 | 0x4800 0048 | SPIDELAY | Delay Register |
| 0x4700 004C | 0x4800 004C | SPIDEF | Default Chip Select Register |
| 0x4700 0050 | 0x4800 0050 | SPIFMT0 | Format Register 0 |
| 0x4700 0054 | 0x4800 0054 | SPIFMT1 | Format Register 1 |
| 0x4700 0058 | 0x4800 0058 | SPIFMT2 | Format Register 2 |
| 0x4700 005C | 0x4800 005C | SPIFMT3 | Format Register 3 |
| 0x4700 0060 | 0x4800 0060 | TGINTVECT0 | Interrupt Vector for SPI INT0 |
| 0x4700 0064 | 0x4800 0064 | TGINTVECT1 | Interrupt Vector for SPI INT1 |


Copyright © 2014, Texas Instruments Incorporated

### 4.14.3 SPI Electrical Data/Timing

#### 4.14.3.1 Serial Peripheral Interface (SPI) Timing

Table 4-27 through Table 4-34 assume testing over recommended operating conditions (see Figure 4-33 through Figure 4-36).

**Table 4-27. General Timing Requirements for SPIx Master Modes(1)**

| NO. | PARAMETER | | | MIN | TYP | MAX | UNIT |
|---|---|---|---|---|---|---|---|
| 1 | $t_{c(SPC)M}$ | Cycle Time, SPIx_CLK, All Master Modes | | greater of 8P or 100 ns | | 256P | ns |
| 2 | $t_{w(SPCH)M}$ | Pulse Width High, SPIx_CLK, All Master Modes | | greater of 4P or 45 ns | | | ns |
| 3 | $t_{w(SPCL)M}$ | Pulse Width Low, SPIx_CLK, All Master Modes | | greater of 4P or 45 ns | | | ns |
| 4 | $t_{d(SIMO_SPC)M}$ | Delay, initial data bit valid on SPIx_SIMO to initial edge on SPIx_CLK(2) | Polarity = 0, Phase = 0, to SPIx_CLK rising | 2P | | | ns |
| | | | Polarity = 0, Phase = 1, to SPIx_CLK rising | $0.5t_{c(SPC)M}$ + 2P | | | |
| | | | Polarity = 1, Phase = 0, to SPIx_CLK falling | 2P | | | |
| | | | Polarity = 1, Phase = 1, to SPIx_CLK falling | $0.5t_{c(SPC)M}$ + 2P | | | |
| 5 | $t_{d(SPC_SIMO)M}$ | Delay, subsequent bits valid on SPIx_SIMO after transmit edge of SPIx_CLK | Polarity = 0, Phase = 0, from SPIx_CLK rising | | | 15 | ns |
| | | | Polarity = 0, Phase = 1, from SPIx_CLK falling | | | 15 | |
| | | | Polarity = 1, Phase = 0, from SPIx_CLK falling | | | 15 | |
| | | | Polarity = 1, Phase = 1, from SPIx_CLK rising | | | 15 | |
| 6 | $t_{oh(SPC_SIMO)M}$ | Output hold time, SPIx_SIMO valid after receive edge of SPIxCLK, except for final bit(3) | Polarity = 0, Phase = 0, from SPIx_CLK falling | $0.5t_{c(SPC)M}$ – 10 | | | ns |
| | | | Polarity = 0, Phase = 1, from SPIx_CLK rising | $0.5t_{c(SPC)M}$ – 10 | | | |
| | | | Polarity = 1, Phase = 0, from SPIx_CLK rising | $0.5t_{c(SPC)M}$ – 10 | | | |
| | | | Polarity = 1, Phase = 1, from SPIx_CLK falling | $0.5t_{c(SPC)M}$ – 10 | | | |
| 7 | $t_{su(SOMI_SPC)M}$ | Input Setup Time, SPIx_SOMI valid before receive edge of SPIx_CLK | Polarity = 0, Phase = 0, to SPIx_CLK falling | 0.5P + 15 | | | ns |
| | | | Polarity = 0, Phase = 1, to SPIx_CLK rising | 0.5P + 15 | | | |
| | | | Polarity = 1, Phase = 0, to SPIx_CLK rising | 0.5P + 15 | | | |
| | | | Polarity = 1, Phase = 1, to SPIx_CLK falling | 0.5P + 15 | | | |
| 8 | $t_{ih(SPC_SOMI)M}$ | Input Hold Time, SPIx_SOMI valid after receive edge of SPIx_CLK | Polarity = 0, Phase = 0, from SPIx_CLK falling | 0.5P + 5 | | | ns |
| | | | Polarity = 0, Phase = 1, from SPIx_CLK rising | 0.5P + 5 | | | |
| | | | Polarity = 1, Phase = 0, from SPIx_CLK rising | 0.5P + 5 | | | |
| | | | Polarity = 1, Phase = 1, from SPIx_CLK falling | 0.5P + 5 | | | |

(1) P = SYSCLK2 period
(2) First bit may be MSB or LSB depending upon SPI configuration. MO(0) refers to first bit and MO(n) refers to last bit output on SPIx_SIMO. MI(0) refers to the first bit input and MI(n) refers to the last bit input on SPIx_SOMI.
(3) The final data bit will be held on the SPIx_SIMO pin until the SPIDAT0 or SPIDAT1 register is written with new data.

Copyright © 2014, Texas Instruments Incorporated

**Table 4-28. General Timing Requirements for SPIx Slave Modes(1)**

| NO. | PARAMETER | | | MIN | TYP | MAX | UNIT |
|---|---|---|---|---|---|---|---|
| 9 | $t_{c(SPC)S}$ | Cycle Time, SPIx_CLK, All Slave Modes | | greater of 8P or 100 ns | | 256P | ns |
| 10 | $t_{w(SPCH)S}$ | Pulse Width High, SPIx_CLK, All Slave Modes | | greater of 4P or 45 ns | | | ns |
| 11 | $t_{w(SPCL)S}$ | Pulse Width Low, SPIx_CLK, All Slave Modes | | greater of 4P or 45 ns | | | ns |
| 12 | $t_{su(SOMI_SPC)S}$ | Setup time, transmit data written to SPI and output onto SPIx_SOMI pin before initial clock edge from master.(2) (3) | Polarity = 0, Phase = 0, to SPIx_CLK rising | 2P | | | ns |
| | | | Polarity = 0, Phase = 1, to SPIx_CLK rising | 2P | | | |
| | | | Polarity = 1, Phase = 0, to SPIx_CLK falling | 2P | | | |
| | | | Polarity = 1, Phase = 1, to SPIx_CLK falling | 2P | | | |
| 13 | $t_{d(SPC_SOMI)S}$ | Delay, subsequent bits valid on SPIx_SOMI after transmit edge of SPIx_CLK | Polarity = 0, Phase = 0, from SPIx_CLK rising | | | 2P + 15 | ns |
| | | | Polarity = 0, Phase = 1, from SPIx_CLK falling | | | 2P + 15 | |
| | | | Polarity = 1, Phase = 0, from SPIx_CLK falling | | | 2P + 15 | |
| | | | Polarity = 1, Phase = 1, from SPIx_CLK rising | | | 2P + 15 | |
| 14 | $t_{oh(SPC_SOMI)S}$ | Output hold time, SPIx_SOMI valid after receive edge of SPIxCLK, except for final bit(4) | Polarity = 0, Phase = 0, from SPIx_CLK falling | $0.5t_{c(SPC)S} - 10$ | | | ns |
| | | | Polarity = 0, Phase = 1, from SPIx_CLK rising | $0.5t_{c(SPC)S} - 10$ | | | |
| | | | Polarity = 1, Phase = 0, from SPIx_CLK rising | $0.5t_{c(SPC)S} - 10$ | | | |
| | | | Polarity = 1, Phase = 1, from SPIx_CLK falling | $0.5t_{c(SPC)S} - 10$ | | | |
| 15 | $t_{su(SIMO_SPC)S}$ | Input Setup Time, SPIx_SIMO valid before receive edge of SPIx_CLK | Polarity = 0, Phase = 0, to SPIx_CLK falling | 0.5P + 15 | | | ns |
| | | | Polarity = 0, Phase = 1, to SPIx_CLK rising | 0.5P + 15 | | | |
| | | | Polarity = 1, Phase = 0, to SPIx_CLK rising | 0.5P + 15 | | | |
| | | | Polarity = 1, Phase = 1, to SPIx_CLK falling | 0.5P + 15 | | | |
| 16 | $t_{ih(SPC_SIMO)S}$ | Input Hold Time, SPIx_SIMO valid after receive edge of SPIx_CLK | Polarity = 0, Phase = 0, from SPIx_CLK falling | 0.5P + 5 | | | ns |
| | | | Polarity = 0, Phase = 1, from SPIx_CLK rising | 0.5P + 5 | | | |
| | | | Polarity = 1, Phase = 0, from SPIx_CLK rising | 0.5P + 5 | | | |
| | | | Polarity = 1, Phase = 1, from SPIx_CLK falling | 0.5P + 5 | | | |

(1) P = SYSCLK2 period
(2) First bit may be MSB or LSB depending upon SPI configuration. SO(0) refers to first bit and SO(n) refers to last bit output on SPIx_SOMI. SI(0) refers to the first bit input and SI(n) refers to the last bit input on SPIx_SIMO.
(3) Measured from the termination of the write of new data to the SPI module, as evidenced by new output data appearing on the SPIx_SOMI pin. In analyzing throughput requirements, additional internal bus cycles must be accounted for to allow data to be written to the SPI module by either the DSP CPU or the dMAX.
(4) The final data bit will be held on the SPIx_SOMI pin until the SPIDAT0 or SPIDAT1 register is written with new data.


Copyright © 2014, Texas Instruments Incorporated

**Table 4-29. Additional(1) SPI Master Timings, 4-Pin Enable Option(2) (3)**

| NO. | PARAMETER | | | MIN | TYP | MAX | UNIT |
|---|---|---|---|---|---|---|---|
| 17 | $t_{d(ENA_SPC)M}$ | Delay from slave assertion of SPIx_ENA active to first SPIx_CLK from master.(4) | Polarity = 0, Phase = 0, to SPIx_CLK rising | | | 3P + 15 | ns |
| | | | Polarity = 0, Phase = 1, to SPIx_CLK rising | | | $0.5t_{c(SPC)M}$ + 3P + 15 | |
| | | | Polarity = 1, Phase = 0, to SPIx_CLK falling | | | 3P + 15 | |
| | | | Polarity = 1, Phase = 1, to SPIx_CLK falling | | | $0.5t_{c(SPC)M}$ + 3P + 15 | |
| 18 | $t_{d(SPC_ENA)M}$ | Max delay for slave to deassert SPIx_ENA after final SPIx_CLK edge to ensure master does not begin the next transfer.(5) | Polarity = 0, Phase = 0, from SPIx_CLK falling | | | $0.5t_{c(SPC)M}$ | ns |
| | | | Polarity = 0, Phase = 1, from SPIx_CLK falling | | | 0 | |
| | | | Polarity = 1, Phase = 0, from SPIx_CLK rising | | | $0.5t_{c(SPC)M}$ | |
| | | | Polarity = 1, Phase = 1, from SPIx_CLK rising | | | 0 | |

(1) These parameters are in addition to the general timings for SPI master modes (Table 4-27).
(2) P = SYSCLK2 period
(3) Figure shows only Polarity = 0, Phase = 0 as an example. Table gives parameters for all four master clocking modes.
(4) In the case where the master SPI is ready with new data before SPIx_ENA assertion.
(5) In the case where the master SPI is ready with new data before SPIx_ENA deassertion.

**Table 4-30. Additional(1) SPI Master Timings, 4-Pin Chip Select Option(2) (3)**

| NO. | PARAMETER | | | MIN | TYP | MAX | UNIT |
|---|---|---|---|---|---|---|---|
| 19 | $t_{d(SCS_SPC)M}$ | Delay from SPIx_SCS active to first SPIx_CLK(4) (5) | Polarity = 0, Phase = 0, to SPIx_CLK rising | 2P – 10 | | | ns |
| | | | Polarity = 0, Phase = 1, to SPIx_CLK rising | $0.5t_{c(SPC)M}$ + 2P – 10 | | | |
| | | | Polarity = 1, Phase = 0, to SPIx_CLK falling | 2P – 10 | | | |
| | | | Polarity = 1, Phase = 1, to SPIx_CLK falling | $0.5t_{c(SPC)M}$ + 2P – 10 | | | |
| 20 | $t_{d(SPC_SCS)M}$ | Delay from final SPIx_CLK edge to master deasserting SPIx_SCS (6) (7) | Polarity = 0, Phase = 0, from SPIx_CLK falling | $0.5t_{c(SPC)M}$ | | | ns |
| | | | Polarity = 0, Phase = 1, from SPIx_CLK falling | 0 | | | |
| | | | Polarity = 1, Phase = 0, from SPIx_CLK rising | $0.5t_{c(SPC)M}$ | | | |
| | | | Polarity = 1, Phase = 1, from SPIx_CLK rising | 0 | | | |

(1) These parameters are in addition to the general timings for SPI master modes (Table 4-27).
(2) P = SYSCLK2 period
(3) Figure shows only Polarity = 0, Phase = 0 as an example. Table gives parameters for all four master clocking modes.
(4) In the case where the master SPI is ready with new data before SPIx_SCS assertion.
(5) This delay can be increased under software control by the register bit field SPIDELAY.C2TDELAY[4:0].
(6) Except for modes when SPIDAT1.CSHOLD is enabled and there is additional data to transmit. In this case, SPIx_SCS will remain asserted.
(7) This delay can be increased under software control by the register bit field SPIDELAY.T2CDELAY[4:0].

Copyright © 2014, Texas Instruments Incorporated

**Table 4-31. Additional[1] SPI Master Timings, 5-Pin Option[2] [3]**

| NO. | PARAMETER | | | MIN | TYP | MAX | UNIT |
|---|---|---|---|---|---|---|---|
| 18 | $t_{d(SPC_ENA)M}$ | Max delay for slave to deassert SPIx_ENA after final SPIx_CLK edge to ensure master does not begin the next transfer.[4] | Polarity = 0, Phase = 0, from SPIx_CLK falling | | | $0.5t_{c(SPC)M}$ | ns |
| | | | Polarity = 0, Phase = 1, from SPIx_CLK falling | | | 0 | |
| | | | Polarity = 1, Phase = 0, from SPIx_CLK rising | | | $0.5t_{c(SPC)M}$ | |
| | | | Polarity = 1, Phase = 1, from SPIx_CLK rising | | | 0 | |
| 20 | $t_{d(SPC_SCS)M}$ | Delay from final SPIx_CLK edge to master deasserting SPIx_SCS [5] [6] | Polarity = 0, Phase = 0, from SPIx_CLK falling | $0.5t_{c(SPC)M}$ | | | ns |
| | | | Polarity = 0, Phase = 1, from SPIx_CLK falling | 0 | | | |
| | | | Polarity = 1, Phase = 0, from SPIx_CLK rising | $0.5t_{c(SPC)M}$ | | | |
| | | | Polarity = 1, Phase = 1, from SPIx_CLK rising | 0 | | | |
| 21 | $t_{d(SCSL_ENAL)M}$ | Max delay for slave SPI to drive SPIx_ENA valid after master asserts SPIx_SCS to delay the master from beginning the next transfer. | | | | 0.5P | ns |
| 22 | $t_{d(SCS_SPC)M}$ | Delay from SPIx_SCS active to first SPIx_CLK[7] [8] [9] | Polarity = 0, Phase = 0, to SPIx_CLK rising | 2P – 10 | | | ns |
| | | | Polarity = 0, Phase = 1, to SPIx_CLK rising | $0.5t_{c(SPC)M}$ + 2P – 10 | | | |
| | | | Polarity = 1, Phase = 0, to SPIx_CLK falling | 2P – 10 | | | |
| | | | Polarity = 1, Phase = 1, to SPIx_CLK falling | $0.5t_{c(SPC)M}$ + 2P – 10 | | | |
| 23 | $t_{d(ENA_SPC)M}$ | Delay from assertion of SPIx_ENA low to first SPIx_CLK edge.[10] | Polarity = 0, Phase = 0, to SPIx_CLK rising | | | 3P + 15 | ns |
| | | | Polarity = 0, Phase = 1, to SPIx_CLK rising | | | $0.5t_{c(SPC)M}$ + 3P + 15 | |
| | | | Polarity = 1, Phase = 0, to SPIx_CLK falling | | | 3P + 15 | |
| | | | Polarity = 1, Phase = 1, to SPIx_CLK falling | | | $0.5t_{c(SPC)M}$ + 3P + 15 | |

(1) These parameters are in addition to the general timings for SPI master modes (Table 4-27).
(2) P = SYSCLK2 period
(3) Figure shows only Polarity = 0, Phase = 0 as an example. Table gives parameters for all four master clocking modes.
(4) In the case where the master SPI is ready with new data before SPIx_ENA deassertion.
(5) Except for modes when SPIDAT1.CSHOLD is enabled and there is additional data to transmit. In this case, SPIx_SCS will remain asserted.
(6) This delay can be increased under software control by the register bit field SPIDELAY.T2CDELAY[4:0].
(7) If SPIx_ENA is asserted immediately such that the transmission is not delayed by SPIx_ENA.
(8) In the case where the master SPI is ready with new data before SPIx_SCS assertion.
(9) This delay can be increased under software control by the register bit field SPIDELAY.C2TDELAY[4:0].
(10) If SPIx_ENA was initially deasserted high and SPIx_CLK is delayed.

**Table 4-32. Additional[1] SPI Slave Timings, 4-Pin Enable Option[2] [3]**

| NO. | PARAMETER | | | MIN | TYP | MAX | UNIT |
|---|---|---|---|---|---|---|---|
| 24 | $t_{d(SPC_ENAH)S}$ | Delay from final SPIx_CLK edge to slave deasserting SPIx_ENA. | Polarity = 0, Phase = 0, from SPIx_CLK falling | P – 10 | | 3P + 15 | ns |
| | | | Polarity = 0, Phase = 1, from SPIx_CLK falling | $–0.5t_{c(SPC)M}$ + P – 10 | | $–0.5t_{c(SPC)M}$ + 3P + 15 | |
| | | | Polarity = 1, Phase = 0, from SPIx_CLK rising | P – 10 | | 3P + 15 | |
| | | | Polarity = 1, Phase = 1, from SPIx_CLK rising | $–0.5t_{c(SPC)M}$ + P – 10 | | $–0.5t_{c(SPC)M}$ + 3P + 15 | |

(1) These parameters are in addition to the general timings for SPI slave modes (Table 4-28).
(2) P = SYSCLK2 period
(3) Figure shows only Polarity = 0, Phase = 0 as an example. Table gives parameters for all four slave clocking modes.


Copyright © 2014, Texas Instruments Incorporated

**Table 4-33. Additional(1) SPI Slave Timings, 4-Pin Chip Select Option(2) (3)**

| NO. | PARAMETER | | | MIN | TYP | MAX | UNIT |
|---|---|---|---|---|---|---|---|
| 25 | $t_{d(SCSL_SPC)S}$ | Required delay from $\overline{SPIx_SCS}$ asserted at slave to first SPIx_CLK edge at slave. | | P | | | ns |
| 26 | $t_{d(SPC_SCSH)S}$ | Required delay from final SPIx_CLK edge before $\overline{SPIx_SCS}$ is deasserted. | Polarity = 0, Phase = 0, from SPIx_CLK falling | $0.5t_{c(SPC)M}$ + P + 10 | | | ns |
| | | | Polarity = 0, Phase = 1, from SPIx_CLK falling | P + 10 | | | |
| | | | Polarity = 1, Phase = 0, from SPIx_CLK rising | $0.5t_{c(SPC)M}$ + P + 10 | | | |
| | | | Polarity = 1, Phase = 1, from SPIx_CLK rising | P + 10 | | | |
| 27 | $t_{ena(SCSL_SOMI)S}$ | Delay from master asserting $\overline{SPIx_SCS}$ to slave driving SPIx_SOMI valid | | | | P + 15 | ns |
| 28 | $t_{dis(SCSH_SOMI)S}$ | Delay from master deasserting $\overline{SPIx_SCS}$ to slave 3-stating SPIx_SOMI | | | | P + 15 | ns |

(1) These parameters are in addition to the general timings for SPI slave modes (Table 4-28).
(2) P = SYSCLK2 period
(3) Figure shows only Polarity = 0, Phase = 0 as an example. Table gives parameters for all four slave clocking modes.

Copyright © 2014, Texas Instruments Incorporated

**Table 4-34. Additional[1] SPI Slave Timings, 5-Pin Option[2] [3]**

| NO. | PARAMETER | | MIN | TYP | MAX | UNIT |
|---|---|---|---|---|---|---|
| 25 | $t_{d(SCSL_SPC)S}$ | Required delay from $\overline{SPIx_SCS}$ asserted at slave to first SPIx_CLK edge at slave. | P | | | ns |
| 26 | $t_{d(SPC_SCSH)S}$ | Required delay from final SPIx_CLK edge before $\overline{SPIx_SCS}$ is deasserted. Polarity = 0, Phase = 0, from SPIx_CLK falling | $0.5t_{c(SPC)M}$ + P + 10 | | | ns |
| | | Polarity = 0, Phase = 1, from SPIx_CLK falling | P + 10 | | | |
| | | Polarity = 1, Phase = 0, from SPIx_CLK rising | $0.5t_{c(SPC)M}$ + P + 10 | | | |
| | | Polarity = 1, Phase = 1, from SPIx_CLK rising | P + 10 | | | |
| 27 | $t_{ena(SCSL_SOMI)S}$ | Delay from master asserting $\overline{SPIx_SCS}$ to slave driving SPIx_SOMI valid | | | P + 15 | ns |
| 28 | $t_{dis(SCSH_SOMI)S}$ | Delay from master deasserting $\overline{SPIx_SCS}$ to slave 3-stating SPIx_SOMI | | | P + 15 | ns |
| 29 | $t_{ena(SCSL_ENA)S}$ | Delay from master deasserting $\overline{SPIx_SCS}$ to slave driving $\overline{SPIx_ENA}$ valid | | | 15 | ns |
| 30 | $t_{dis(SPC_ENA)S}$ | Delay from final clock receive edge on SPIx_CLK to slave 3-stating or driving high $\overline{SPIx_ENA}$.[4] Polarity = 0, Phase = 0, from SPIx_CLK falling | | | 2P + 15 | ns |
| | | Polarity = 0, Phase = 1, from SPIx_CLK rising | | | 2P + 15 | |
| | | Polarity = 1, Phase = 0, from SPIx_CLK rising | | | 2P + 15 | |
| | | Polarity = 1, Phase = 1, from SPIx_CLK falling | | | 2P + 15 | |

(1) These parameters are in addition to the general timings for SPI slave modes (Table 4-28).
(2) P = SYSCLK2 period
(3) Figure shows only Polarity = 0, Phase = 0 as an example. Table gives parameters for all four slave clocking modes.
(4) $\overline{SPIx_ENA}$ is driven low after the transmission completes if the SPIINT0.ENABLE_HIGHZ bit is programmed to 0. Otherwise it is 3-stated. If 3-stated, an external pullup resistor should be used to provide a valid level to the master. This option is useful when tying several SPI slave devices to a single master.


Copyright © 2014, Texas Instruments Incorporated

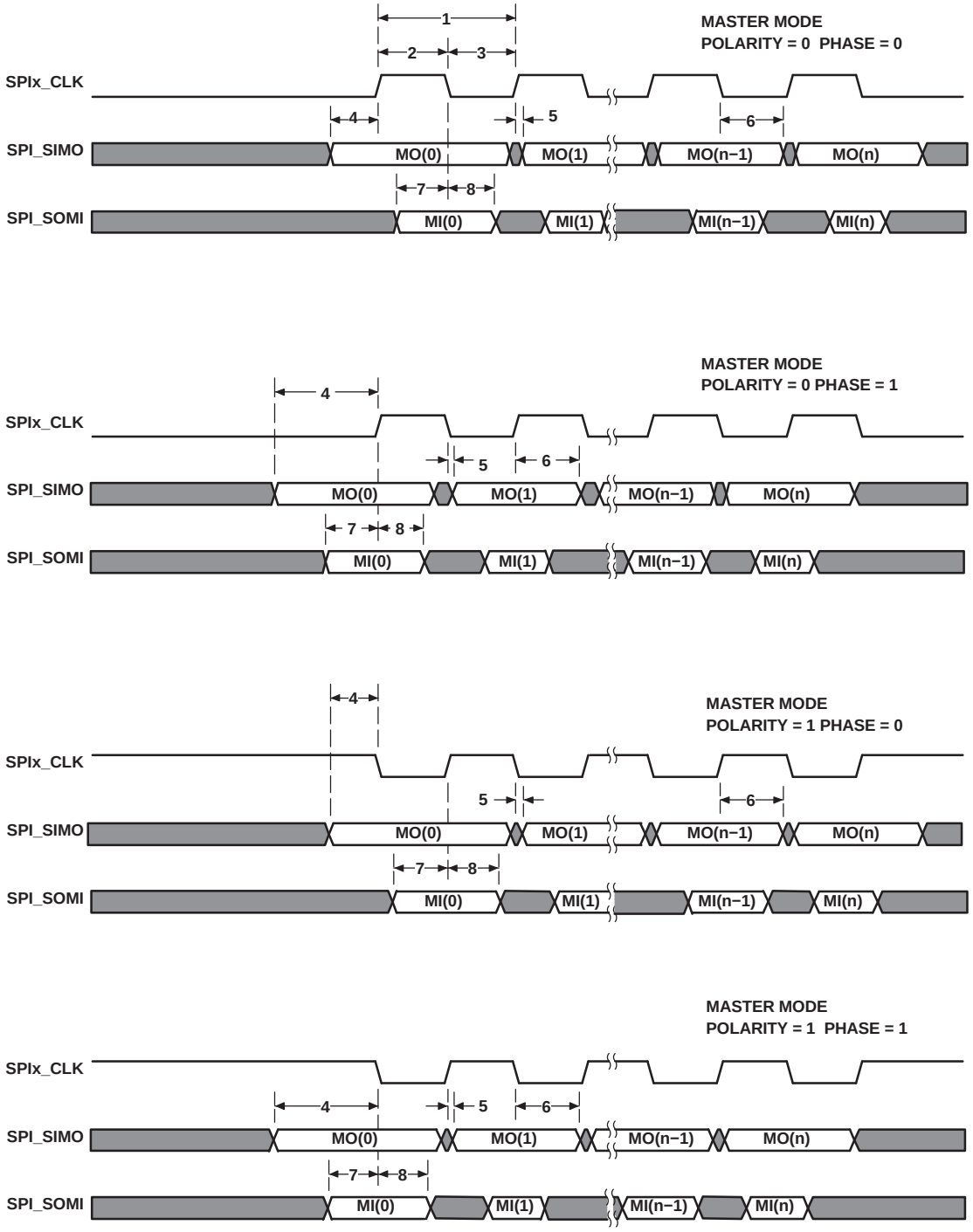


**Figure 4-33. SPI Timings—Master Mode**

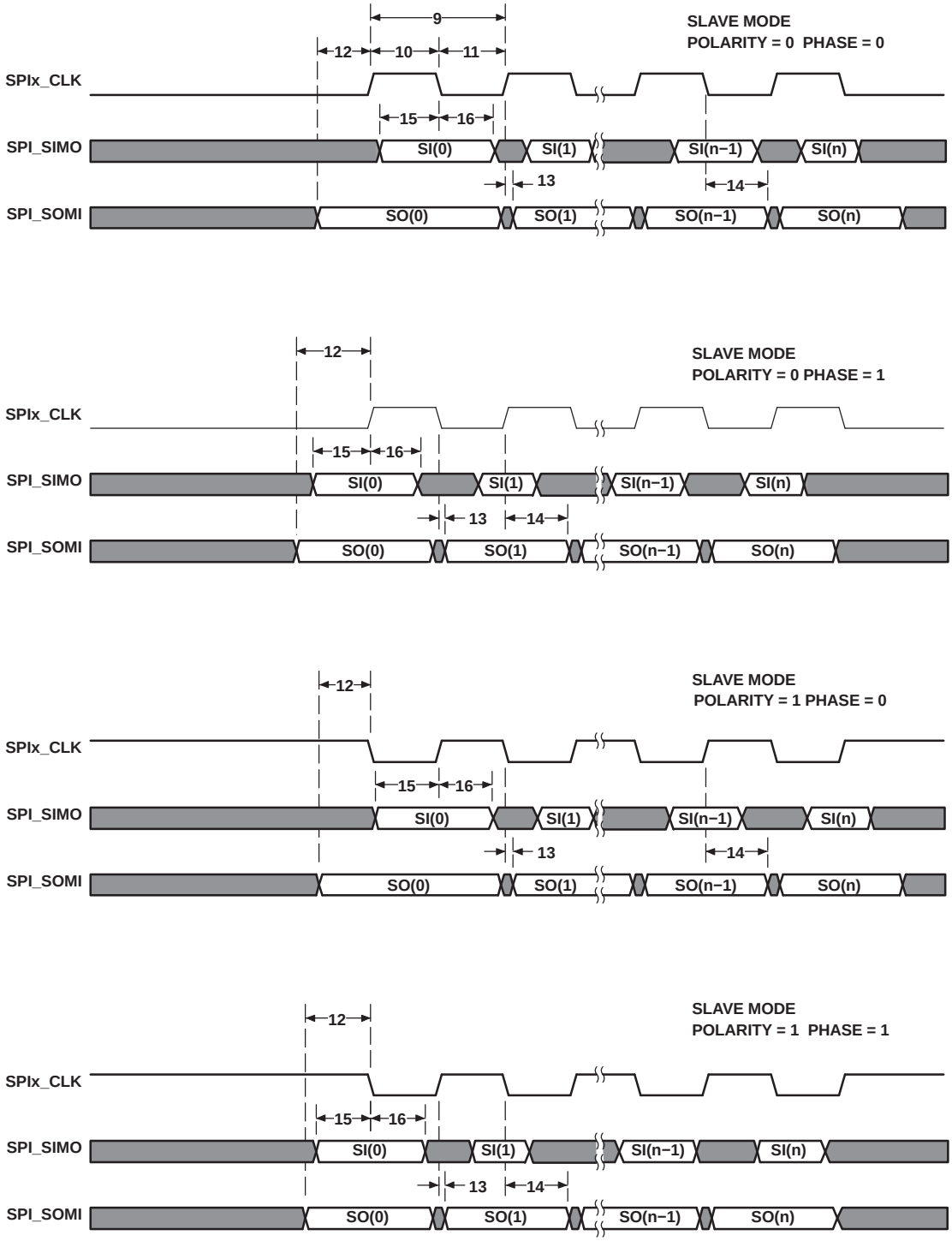


**Figure 4-34. SPI Timings—Slave Mode**


Copyright © 2014, Texas Instruments Incorporated

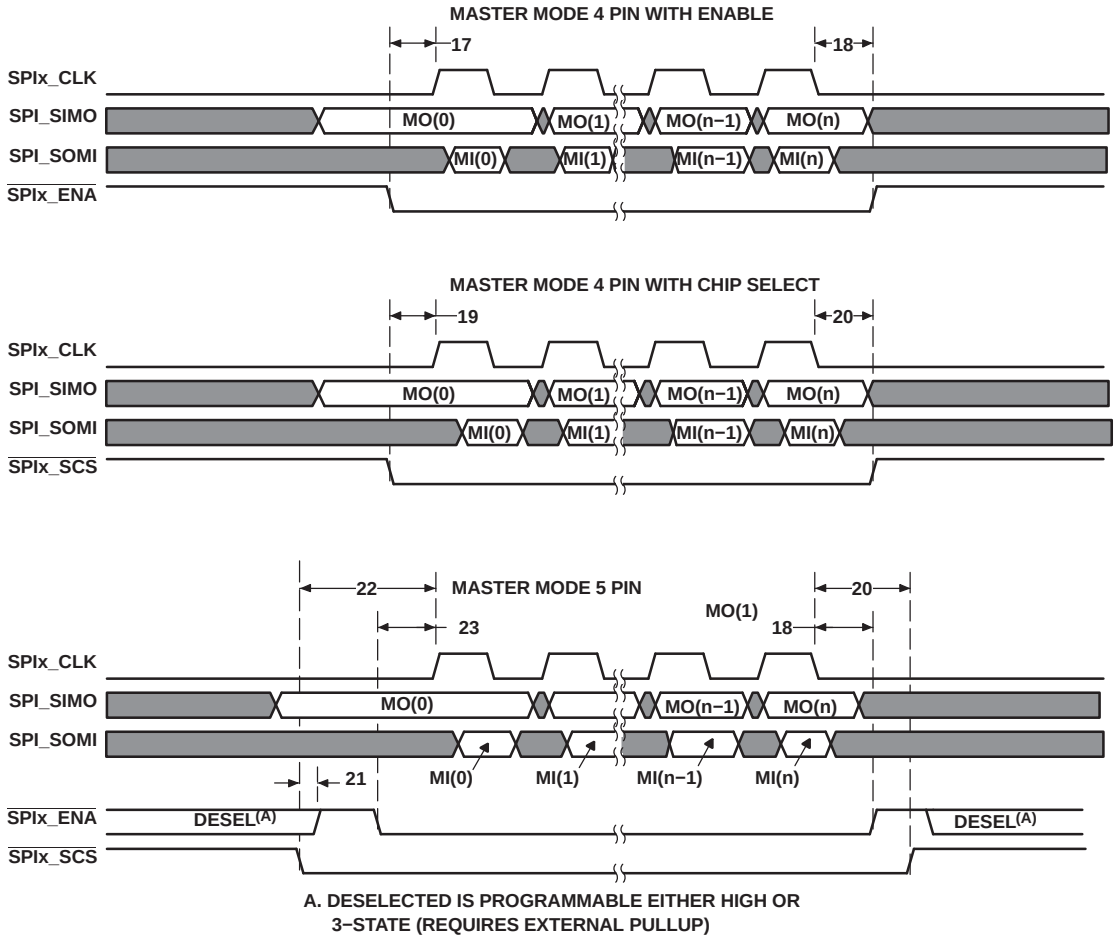


**Figure 4-35. SPI Timings—Master Mode (4-Pin and 5-Pin)**

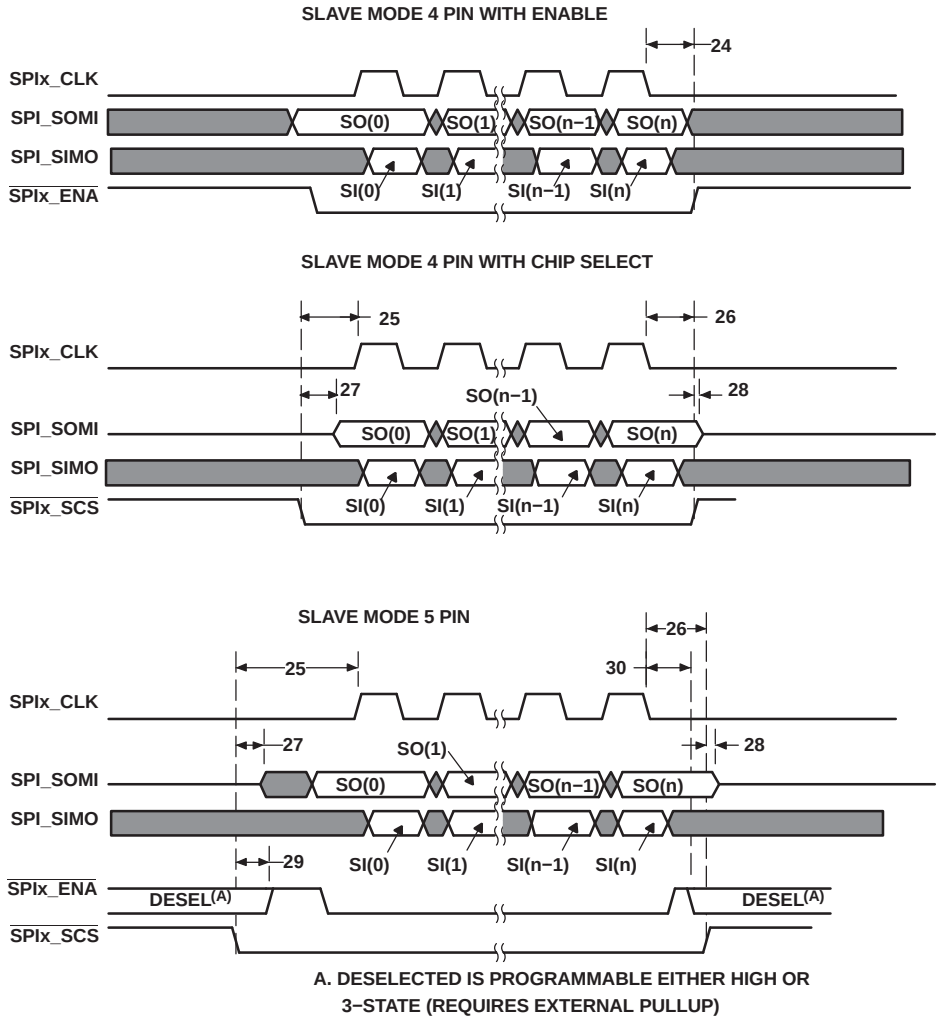


**Figure 4-36. SPI Timings—Slave Mode (4-Pin and 5-Pin)**


Copyright © 2014, Texas Instruments Incorporated

## 4.15 Inter-Integrated Circuit Serial Ports (I2C0, I2C1)

### *4.15.1 I2C Device-Specific Information*

Having two I2C modules on the C6727B simplifies system architecture, since one module may be used by the DSP to control local peripherals ICs (DACs, ADCs, etc.) while the other may be used to communicate with other controllers in a system or to implement a user interface. Figure 4-37 is block diagram of the C6727B I2C Module.

Each I2C port supports:

- Compatible with Philips® I2C Specification Revision 2.1 (January 2000)
- Fast Mode up to 400 Kbps (no fail-safe I/O buffers)
- Noise Filter to Remove Noise 50 ns or less
- Seven- and Ten-Bit Device Addressing Modes
- Master (Transmit/Receive) and Slave (Transmit/Receive) Functionality
- Events: DMA, Interrupt, or Polling
- General-Purpose I/O Capability if not used as I2C

**CAUTION**

The C6727B I2C pins use a standard ±8 mA LVCMOS buffer, not the slow I/O buffer defined in the I2C specification. Series resistors may be necessary to reduce noise at the system level.

Copyright © 2014, Texas Instruments Incorporated

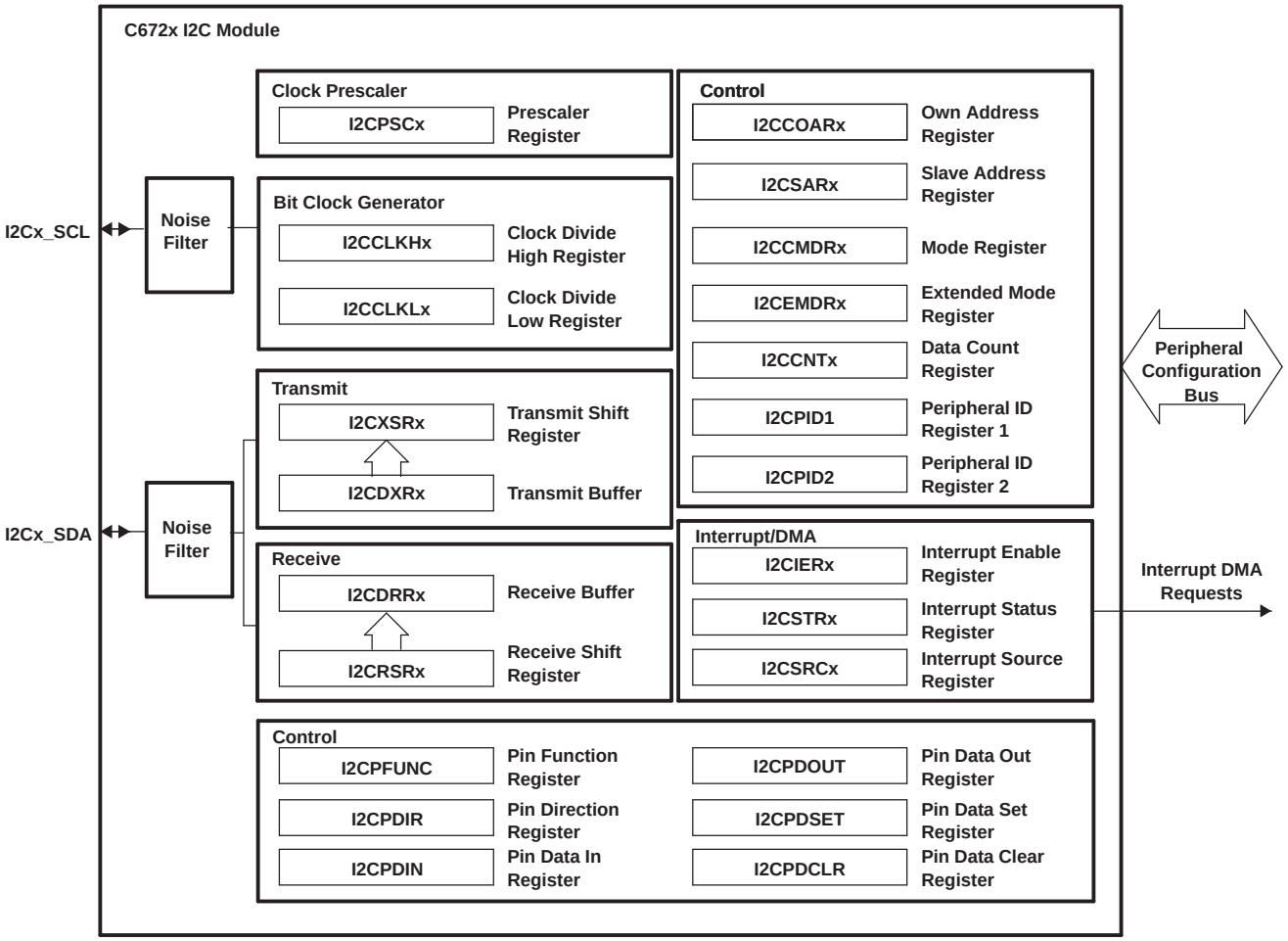


**Figure 4-37. I2C Module Block Diagram**

### *4.15.2 I2C Peripheral Registers Description(s)*

Table 4-35 is a list of the I2C registers.

**Table 4-35. I2Cx Configuration Registers**

| I2C0 BYTE ADDRESS | I2C1 BYTE ADDRESS | REGISTER NAME | DESCRIPTION |
|---|---|---|---|
| 0x4900 0000 | 0x4A00 0000 | I2COAR | Own Address Register |
| 0x4900 0004 | 0x4A00 0004 | I2CIER | Interrupt Enable Register |
| 0x4900 0008 | 0x4A00 0008 | I2CSTR | Interrupt Status Register |
| 0x4900 000C | 0x4A00 000C | I2CCLKL | Clock Low Time Divider Register |
| 0x4900 0010 | 0x4A00 0010 | I2CCLKH | Clock High Time Divider Register |
| 0x4900 0014 | 0x4A00 0014 | I2CCNT | Data Count Register |
| 0x4900 0018 | 0x4A00 0018 | I2CDRR | Data Receive Register |
| 0x4900 001C | 0x4A00 001C | I2CSAR | Slave Address Register |
| 0x4900 0020 | 0x4A00 0020 | I2CDXR | Data Transmit Register |
| 0x4900 0024 | 0x4A00 0024 | I2CMDR | Mode Register |
| 0x4900 0028 | 0x4A00 0028 | I2CISR | Interrupt Source Register |
| 0x4900 002C | 0x4A00 002C | I2CEMDR | Extended Mode Register |
| 0x4900 0030 | 0x4A00 0030 | I2CPSC | Prescale Register |
| 0x4900 0034 | 0x4A00 0034 | I2CPID1 | Peripheral Identification Register 1 |


Copyright © 2014, Texas Instruments Incorporated

**Table 4-35. I2Cx Configuration Registers (continued)**

| I2C0 BYTE ADDRESS | I2C1 BYTE ADDRESS | REGISTER NAME | DESCRIPTION |
|---|---|---|---|
| 0x4900 0038 | 0x4A00 0038 | I2CPID2 | Peripheral Identification Register 2 |
| 0x4900 0048 | 0x4A00 0048 | I2CPFUNC | Pin Function Register |
| 0x4900 004C | 0x4A00 004C | I2CPDIR | Pin Direction Register |
| 0x4900 0050 | 0x4A00 0050 | I2CPDIN | Pin Data Input Register |
| 0x4900 0054 | 0x4A00 0054 | I2CPDOUT | Pin Data Output Register |
| 0x4900 0058 | 0x4A00 0058 | I2CPDSET | Pin Data Set Register |
| 0x4900 005C | 0x4A00 005C | I2CPDCLR | Pin Data Clear Register |

Copyright © 2014, Texas Instruments Incorporated

## 4.15.3 I2C Electrical Data/Timing

### 4.15.3.1 Inter-Integrated Circuit (I2C) Timing

Table 4-36 and Table 4-37 assume testing over recommended operating conditions (see Figure 4-38 and Figure 4-39).

**Table 4-36. I2C Input Timing Requirements**

| NO. | PARAMETER | | | MIN | TYP | MAX | UNIT |
|---|---|---|---|---|---|---|---|
| 1 | $t_{c(SCL)}$ | Cycle time, I2Cx_SCL | Standard Mode | 10 | | | µs |
| | | | Fast Mode | 2.5 | | | |
| 2 | $t_{su(SCLH-SDAL)}$ | Setup time, I2Cx_SCL high before I2Cx_SDA low | Standard Mode | 4.7 | | | µs |
| | | | Fast Mode | 0.6 | | | |
| 3 | $t_{h(SCLL-SDAL)}$ | Hold time, I2Cx_SCL low after I2Cx_SDA low | Standard Mode | 4 | | | µs |
| | | | Fast Mode | 0.6 | | | |
| 4 | $t_{w(SCLL)}$ | Pulse duration, I2Cx_SCL low | Standard Mode | 4.7 | | | µs |
| | | | Fast Mode | 1.3 | | | |
| 5 | $t_{w(SCLH)}$ | Pulse duration, I2Cx_SCL high | Standard Mode | 4 | | | µs |
| | | | Fast Mode | 0.6 | | | |
| 6 | $t_{su(SDA-SCLH)}$ | Setup time, I2Cx_SDA before I2Cx_SCL high | Standard Mode | 250 | | | ns |
| | | | Fast Mode | 100 | | | |
| 7 | $t_{h(SDA-SCLL)}$ | Hold time, I2Cx_SDA after I2Cx_SCL low | Standard Mode | 0 | | | µs |
| | | | Fast Mode | 0 | | 0.9 | |
| 8 | $t_{w(SDAH)}$ | Pulse duration, I2Cx_SDA high | Standard Mode | 4.7 | | | µs |
| | | | Fast Mode | 1.3 | | | |
| 9 | $t_{r(SDA)}$ | Rise time, I2Cx_SDA | Standard Mode | | | 1000 | ns |
| | | | Fast Mode | $20 + 0.1C_b$ | | 300 | |
| 10 | $t_{r(SCL)}$ | Rise time, I2Cx_SCL | Standard Mode | | | 1000 | ns |
| | | | Fast Mode | $20 + 0.1C_b$ | | 300 | |
| 11 | $t_{f(SDA)}$ | Fall time, I2Cx_SDA | Standard Mode | | | 300 | ns |
| | | | Fast Mode | $20 + 0.1C_b$ | | 300 | |
| 12 | $t_{f(SCL)}$ | Fall time, I2Cx_SCL | Standard Mode | | | 300 | ns |
| | | | Fast Mode | $20 + 0.1C_b$ | | 300 | |
| 13 | $t_{su(SCLH-SDAH)}$ | Setup time, I2Cx_SCL high before I2Cx_SDA high | Standard Mode | 4 | | | µs |
| | | | Fast Mode | 0.6 | | | |
| 14 | $t_{w(SP)}$ | Pulse duration, spike (must be suppressed) | Standard Mode | N/A | | | ns |
| | | | Fast Mode | 0 | | 50 | |
| 15 | $C_b$ | Capacitive load for each bus line | Standard Mode | | | 400 | pF |
| | | | Fast Mode | | | 400 | |

**Table 4-37. I2C Switching Characteristics(1)**

| NO. | PARAMETER | | | MIN | TYP | MAX | UNIT |
|---|---|---|---|---|---|---|---|
| 16 | $t_{c(SCL)}$ | Cycle time, I2Cx_SCL | Standard Mode | 10 | | | µs |
| | | | Fast Mode | 2.5 | | | |
| 17 | $t_{su(SCLH-SDAL)}$ | Setup time, I2Cx_SCL high before I2Cx_SDA low | Standard Mode | 4.7 | | | µs |
| | | | Fast Mode | 0.6 | | | |
| 18 | $t_{h(SDAL-SCLL)}$ | Hold time, I2Cx_SCL low after I2Cx_SDA low | Standard Mode | 4 | | | µs |
| | | | Fast Mode | 0.6 | | | |
| 19 | $t_{w(SCLL)}$ | Pulse duration, I2Cx_SCL low | Standard Mode | 4.7 | | | µs |
| | | | Fast Mode | 1.3 | | | |

(1) I2C must be configured correctly to meet the timings in Table 4-37.


Copyright © 2014, Texas Instruments Incorporated

**Table 4-37. I2C Switching Characteristics[1] (continued)**

| NO. | PARAMETER | | | MIN | TYP | MAX | UNIT |
|---|---|---|---|---|---|---|---|
| 20 | $t_{w(SCLH)}$ | Pulse duration, I2Cx_SCL high | Standard Mode | 4 | | | µs |
| | | | Fast Mode | 0.6 | | | |
| 21 | $t_{su(SDAV-SCLH)}$ | Setup time, I2Cx_SDA valid before I2Cx_SCL high | Standard Mode | 250 | | | ns |
| | | | Fast Mode | 100 | | | |
| 22 | $t_{h(SCLL-SDAV)}$ | Hold time, I2Cx_SDA valid after I2Cx_SCL low | Standard Mode | 0 | | | µs |
| | | | Fast Mode | 0 | | 0.9 | |
| 23 | $t_{w(SDAH)}$ | Pulse duration, I2Cx_SDA high | Standard Mode | 4.7 | | | µs |
| | | | Fast Mode | 1.3 | | | |
| 28 | $t_{su(SCLH-SDAH)}$ | Setup time, I2Cx_SCL high before I2Cx_SDA high | Standard Mode | 4 | | | µs |
| | | | Fast Mode | 0.6 | | | |
| 29 | $C_b$ | Capacitive load on each bus line from this device | Standard Mode | | | 10 | pF |
| | | | Fast Mode | | | 10 | |

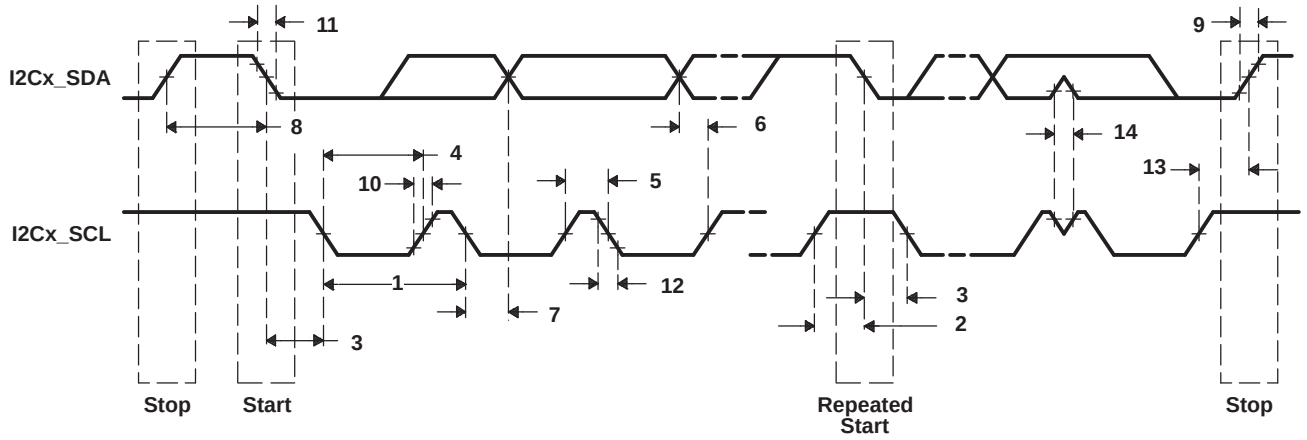


**Figure 4-38. I2C Receive Timings**

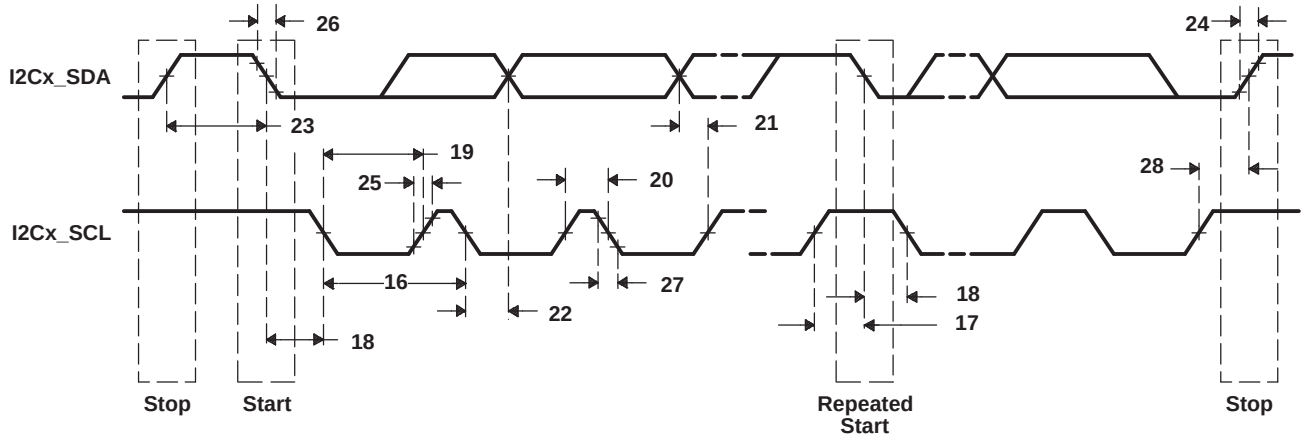


**Figure 4-39. I2C Transmit Timings**

## 4.16 Real-Time Interrupt (RTI) Timer With Digital Watchdog

### *4.16.1 RTI/Digital Watchdog Device-Specific Information*

C6727B includes an RTI timer module which is used to generate periodic interrupts. This module also includes an optional digital watchdog feature. Figure 4-40 contains a block diagram of the RTI module.

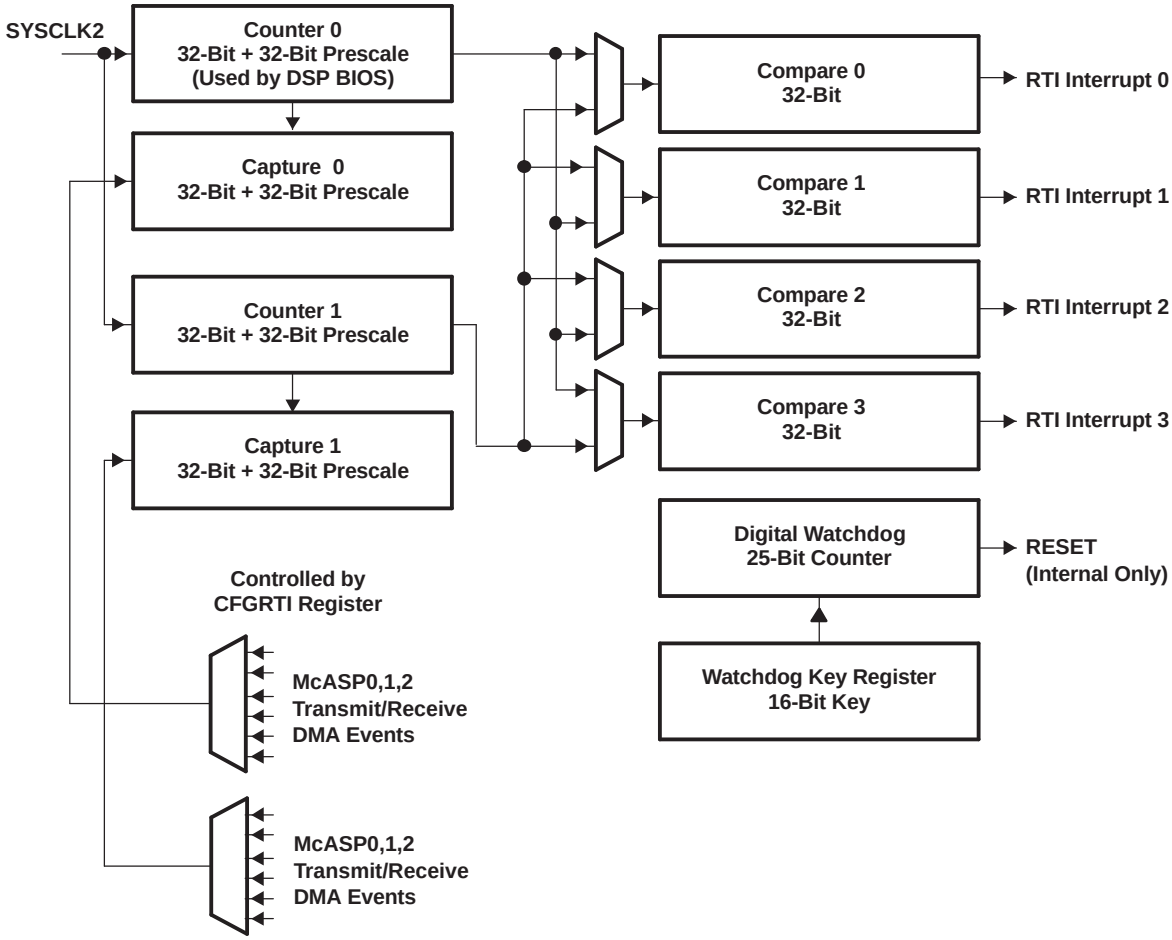


**Figure 4-40. RTI Timer Block Diagram**

The RTI timer module consists of two independent counters which are both clocked from SYSCLK2 (but may be started individually and may have different prescaler settings).

The counters provide the timebase against which four output comparators operate. These comparators may be programmed to generate periodic interrupts. The comparators include an adder which automatically updates the compare value after each periodic interrupt. This means that the DSP only needs to initialize the comparator once with the interrupt period.

The two input captures can be triggered from any of the McASP0, McASP1, or McASP2 DMA events. The device configuration register which selects the McASP events to measure is defined in Table 4-39.

Measuring the time difference between these events provides an accurate measure of the sample rates at which the McASPs are transmitting and receiving. This measurement can be useful as a hardware assist for a software asynchronous sample rate converter algorithm.


Copyright © 2014, Texas Instruments Incorporated

The digital watchdog is disabled by default. Once enabled, a sequence of two 16-bit key values (0xE51A followed by 0xA35C in two separate writes) must be continually written to the key register before the watchdog counter counts down to zero; otherwise, the DSP will be reset. This feature can be used to provide an added measure of robustness against a software failure. If the application fails and ceases to write to the watchdog key; the watchdog will respond by resetting the DSP and thereby restarting the application.

Note that Counter 0 and Compare 0 are used by DSP BIOS to generate the tick counter it requires; however, Capture 0 is still available for use by the application as well as the remaining RTI resources.

### 4.16.2 RTI/Digital Watchdog Registers Description(s)

Table 4-38 is a list of the RTI registers.

**Table 4-38. RTI Registers**

| BYTE ADDRESS | REGISTER NAME | DESCRIPTION |
|---|---|---|
| **Device-Level Configuration Registers Controlling RTI** | | |
| 0x4000 0014 | CFGRTI | Selects the sources for the RTI input captures from among the six McASP DMA event. |
| **RTI Internal Registers** | | |
| 0x4200 0000 | RTIGCTRL | Global Control Register. Starts / stops the counters. |
| 0x4200 0004 | Reserved | Reserved bit. |
| 0x4200 0008 | RTICAPCTRL | Capture Control. Controls the capture source for the counters. |
| 0x4200 000C | RTICOMPCTRL | Compare Control. Controls the source for the compare registers. |
| 0x4200 0010 | RTIFRC0 | Free-Running Counter 0. Current value of free-running counter 0. |
| 0x4200 0014 | RTIUC0 | Up-Counter 0. Current value of prescale counter 0. |
| 0x4200 0018 | RTICPUC0 | Compare Up-Counter 0. Compare value compared with prescale counter 0. |
| 0x4200 0020 | RTICAFRC0 | Capture Free-Running Counter 0. Current value of free-running counter 0 on external event. |
| 0x4200 0024 | RTICAUC0 | Capture Up-Counter 0. Current value of prescale counter 0 on external event. |
| 0x4200 0030 | RTIFRC1 | Free-Running Counter 1. Current value of free-running counter 1. |
| 0x4200 0034 | RTIUC1 | Up-Counter 1. Current value of prescale counter 1. |
| 0x4200 0038 | RTICPUC1 | Compare Up-Counter 1. Compare value compared with prescale counter 1. |
| 0x4200 0040 | RTICAFRC1 | Capture Free-Running Counter 1. Current value of free-running counter 1 on external event. |
| 0x4200 0044 | RTICAUC1 | Capture Up-Counter 1. Current value of prescale counter 1 on external event. |
| 0x4200 0050 | RTICOMP0 | Compare 0. Compare value to be compared with the counters. |
| 0x4200 0054 | RTIUDCP0 | Update Compare 0. Value to be added to the compare register 0 value on compare match. |
| 0x4200 0058 | RTICOMP1 | Compare 1. Compare value to be compared with the counters. |
| 0x4200 005C | RTIUDCP1 | Update Compare 1. Value to be added to the compare register 1 value on compare match. |
| 0x4200 0060 | RTICOMP2 | Compare 2. Compare value to be compared with the counters. |
| 0x4200 0064 | RTIUDCP2 | Update Compare 2. Value to be added to the compare register 2 value on compare match. |
| 0x4200 0068 | RTICOMP3 | Compare 3. Compare value to be compared with the counters. |
| 0x4200 006C | RTIUDCP3 | Update Compare 3. Value to be added to the compare register 3 value on compare match. |
| 0x4200 0070 | Reserved | Reserved bit. |
| 0x4200 0074 | Reserved | Reserved bit. |
| 0x4200 0080 | RTISETINT | Set Interrupt Enable. Sets interrupt enable bits int RTIINTCTRL without having to do a read-modify-write operation. |
| 0x4200 0084 | RTICLEARINT | Clear Interrupt Enable. Clears interrupt enable bits int RTIINTCTRL without having to do a read-modify-write operation. |
| 0x4200 0088 | RTIINTFLAG | Interrupt Flags. Interrupt pending bits. |

Copyright © 2014, Texas Instruments Incorporated

**Table 4-38. RTI Registers (continued)**

| BYTE ADDRESS | REGISTER NAME | DESCRIPTION |
|---|---|---|
| 0x4200 0090 | RTIDWDCTRL | Digital Watchdog Control. Enables the Digital Watchdog. |
| 0x4200 0094 | RTIDWDPRLD | Digital Watchdog Preload. Sets the experation time of the Digital Watchdog. |
| 0x4200 0098 | RTIWDSTATUS | Watchdog Status. Reflects the status of Analog and Digital Watchdog. |
| 0x4200 009C | RTIWDKEY | Watchdog Key. Correct written key values discharge the external capacitor. |
| 0x4200 00A0 | RTIDWDCNTR | Digital Watchdog Down-Counter |

Figure 4-41 shows the bit layout of the CFGRTI register and Table 4-39 contains a description of the bits.

| 31 – 8 | 7 | 6 – 4 | 3 | 2 – 0 |
|---|---|---|---|---|
| Reserved | Reserved | CAPSEL1 | Reserved | CAPSEL0 |
| | | R/W, 0 | | R/W, 0 |

LEGEND: R/W = Read/Write; R = Read only; -*n* = value after reset

**Figure 4-41. CFGRTI Register Bit Layout (0x4000 0014)**

**Table 4-39. CFGRTI Register Bit Field Description (0x4000 0014)**

| BIT NO. | NAME | RESET VALUE | READ WRITE | DESCRIPTION |
|---|---|---|---|---|
| 31:7,3 | Reserved | N/A | N/A | Reads are indeterminate. Only 0s should be written to these bits. |
| 6:4 | CAPSEL1 | 0 | R/W | CAPSEL0 selects the input to the RTI Input Capture 0 function.<br>CAPSEL1 selects the input to the RTI Input Capture 1 function.<br><br>The encoding is the same for both fields:<br>000 = Select McASP0 Transmit DMA Event<br>001 = Select McASP0 Receive DMA Event<br>010 = Select McASP1 Transmit DMA Event<br>011 = Select McASP1 Receive DMA Event<br>100 = Select McASP2 Transmit DMA Event<br>101 = Select McASP2 Receive DMA Event<br>Other values are reserved and their effect is not determined. |
| 2:0 | CAPSEL0 | 0 | R/W | |


Copyright © 2014, Texas Instruments Incorporated

## 4.17 External Clock Input From Oscillator or CLKIN Pin

The C6727B device includes two choices to provide an external clock input, which is fed to the on-chip PLL to generate high-frequency system clocks. These options are illustrated in Figure 4-42.

- Figure 4-42 (a) illustrates the option that uses an on-chip oscillator with external crystal circuit.
- Figure 4-42 (b) illustrates the option that uses an external 3.3-V LVCMOS-compatible clock input with the CLKIN pin.

Note that the two clock inputs are logically combined internally before the PLL so the clock input that is not used must be tied to ground.

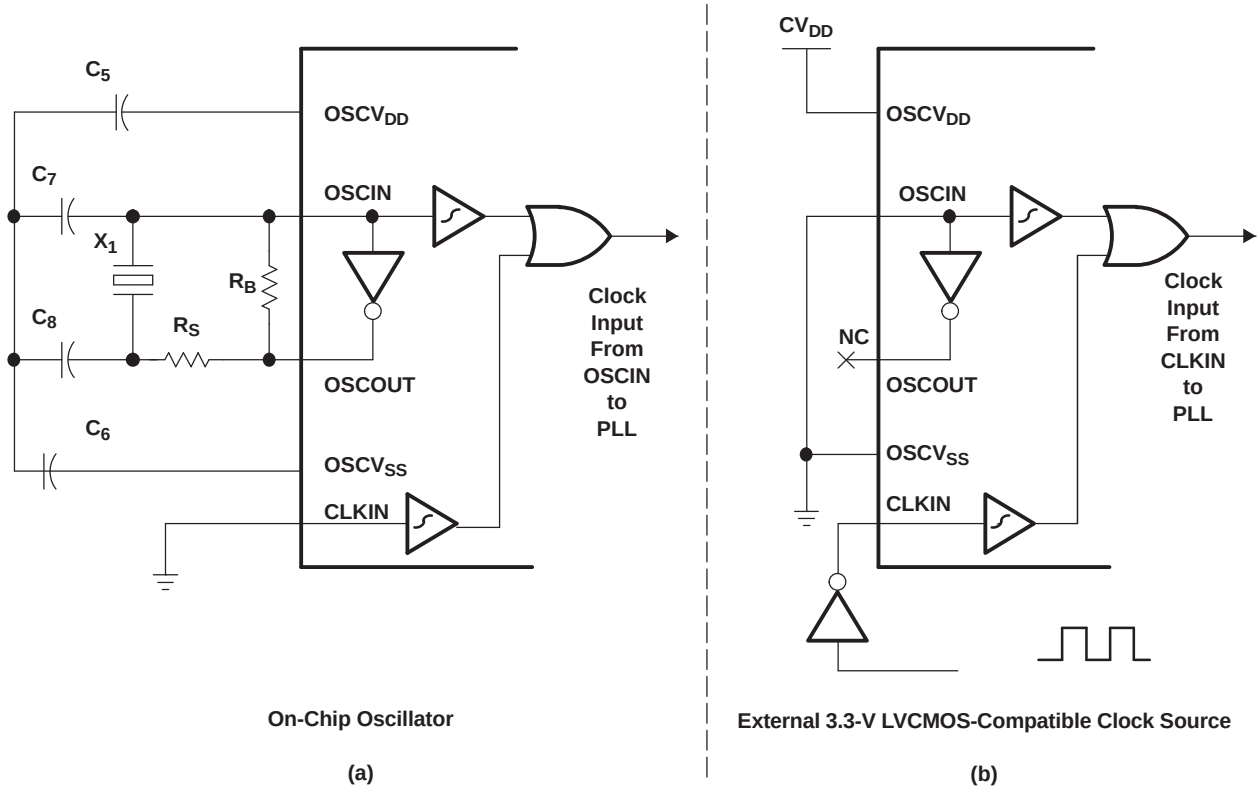


**Figure 4-42. C6727B Clock Input Options**

If the on-chip oscillator is chosen, then the recommended component values for Figure 4-42 (a) are listed in Table 4-40.

**Table 4-40. Recommended On-Chip Oscillator Components**

| FREQUENCY | XTAL TYPE | $X_1$ | $C_5$ (1) | $C_6$ (1) | $C_7$ | $C_8$ | $R_B$ | $R_S$ |
|---|---|---|---|---|---|---|---|---|
| 22.579 | AT-49 | KDS 1AF225796A | 470 pF | 470 pF | 8 pF | 8 pF | 1 MΩ | 0 Ω |
| 22.579 | SMD-49 | KDS 1AS225796AG | 470 pF | 470 pF | 8 pF | 8 pF | 1 MΩ | 0 Ω |
| 24.576 | AT-49 | KDS 1AF245766AAA | 470 pF | 470 pF | 8 pF | 8 pF | 1 MΩ | 0 Ω |
| 24.576 | SMD-49 | KDS 1AS245766AHA | 470 pF | 470 pF | 8 pF | 8 pF | 1 MΩ | 0 Ω |

(1) Capacitors $C_5$ and $C_6$ are used to reduce oscillator jitter, but are optional. If $C_5$ and $C_6$ are not used, then the node connecting capacitors $C_7$ and $C_8$ should be tied to $OSCV_{SS}$ and $OSCV_{DD}$ should be tied to $CV_{DD}$.

Copyright © 2014, Texas Instruments Incorporated

### 4.17.1 Clock Electrical Data/Timing

Table 4-41 assumes testing over recommended operating conditions.

**Table 4-41. CLKIN Timing Requirements**

| NO. | PARAMETER | | MIN | TYP | MAX | UNIT |
|---|---|---|---|---|---|---|
| 1 | $f_{osc}$ | Oscillator frequency range (OSCIN/OSCOUT) | 12 | | 25 | MHz |
| 2 | $t_{c(CLKIN)}$ | Cycle time, external clock driven on CLKIN | 20 | | | ns |
| 3 | $t_{w(CLKINH)}$ | Pulse width, CLKIN high | $0.4t_{c(CLKIN)}$ | | | ns |
| 4 | $t_{w(CLKINL)}$ | Pulse width, CLKIN low | $0.4t_{c(CLKIN)}$ | | | ns |
| 5 | $t_{t(CLKIN)}$ | Transition time, CLKIN | | | 5 | ns |
| 6 | $f_{PLL}$ | Frequency range of PLL input | 12 | | 50 | MHz |


Copyright © 2014, Texas Instruments Incorporated

## 4.18 Phase-Locked Loop (PLL)

### *4.18.1 PLL Device-Specific Information*

The C6727B DSP generates the high-frequency internal clocks it requires through an on-chip PLL.

The input to the PLL is either from the on-chip oscillator (OSCIN pin) or from an external clock on the CLKIN pin. The PLL outputs four clocks that have programmable divider options. Figure 4-43 illustrates the PLL Topology.

The PLL is disabled by default after a device reset. It must be configured by software according to the allowable operating conditions listed in Table 4-42 before enabling the DSP to run from the PLL by setting PLLEN = 1.

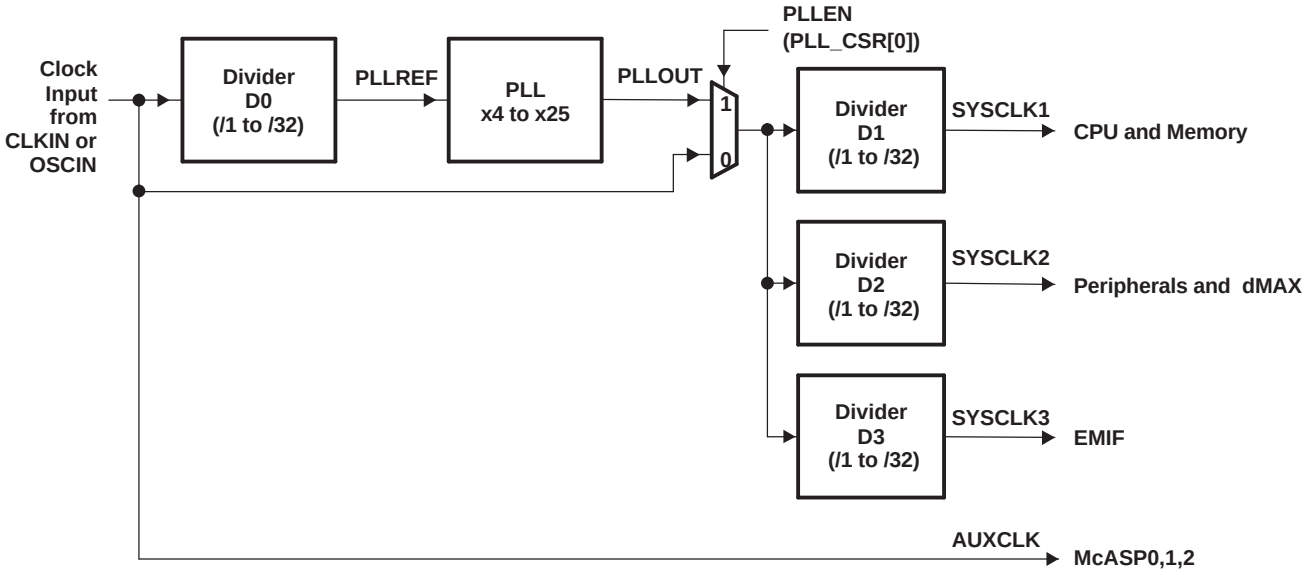


**Figure 4-43. PLL Topology**

**Table 4-42. Allowed PLL Operating Conditions**

| NO. | PARAMETER | DEFAULT VALUE | ALLOWED SETTING OR RANGE | | |
|---|---|---|---|---|---|
| | | | MIN | TYP | MAX |
| 1 | PLLRST = 1 assertion time during initialization | N/A | 125 ns | | |
| 2 | Lock time before setting PLLEN = 1. After changing D0, PLLM, or input clock. | N/A | 187.5 µs | | |
| 3 | PLL input frequency (PLLREF after D0(1)) | | 12 MHz | | 50 MHz |
| 4 | PLL multiplier values (PLLM) | x13 | x4 | | x25 |
| 5 | PLL output frequency (PLLOUT before dividers D1, D2, D3)(2) | N/A | 140 MHz | | 600 MHz |
| 6 | SYSCLK1 frequency (set by PLLM and dividers D0, D1) | PLLOUT/1 | | | Device Frequency Specification |
| 7 | SYSCLK2 frequency (set by PLLM and dividers D0, D2) | PLLOUT/2 | /2, /3, or /4 of SYSCLK1 | | |
| 8 | SYSCLK3 frequency (set by PLLM and dividers D0, D3) | PLLOUT/3 | | | EMIF Frequency Specification |

(1) Some values for the D0 divider produce results outside of this range and should not be selected.
(2) In general, selecting the PLL output clock rate closest to the maximum frequency will decrease clock jitter.

**CAUTION**

SYSCLK1, SYSCLK2, SYSCLK3 must be configured as aligned by setting ALNCTL[2:0] to '1'; and the PLLCMD.GOSET bit must be written every time the dividers D1, D2, and D3 are changed in order to make sure the change takes effect and preserves alignment.

**CAUTION**

When changing the PLL parameters which affect the SYSCLK1, SYSCLK2, SYSCLK3 dividers, the bridge BR2 in Figure 2-4 must be reset by the CFGBRIDGE register. See Table 2-7.

The PLL is an analog circuit and is sensitive to power supply noise. Therefore it has a dedicated 3.3-V power pin (PLLHV) that should be connected to $DV_{DD}$ at the board level through an external filter, as illustrated in Figure 4-44.

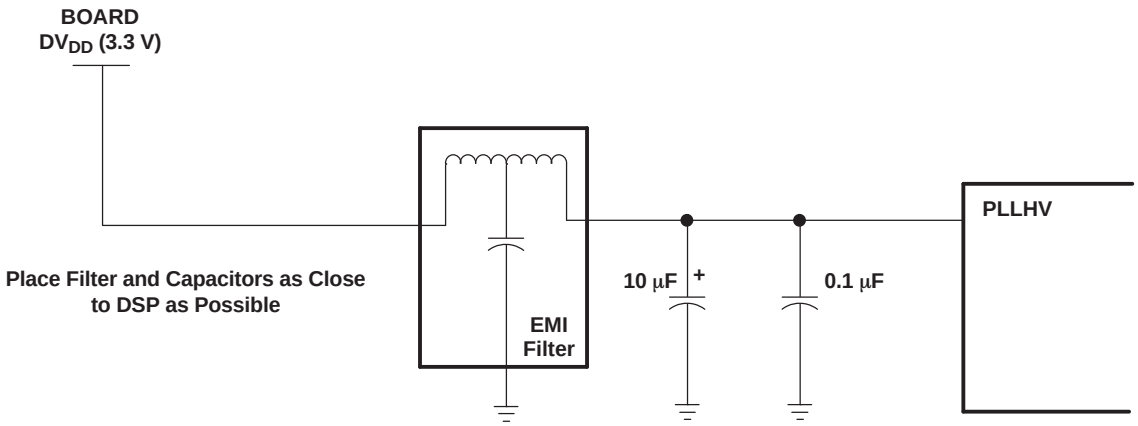


**Figure 4-44. PLL Power Supply Filter**


Copyright © 2014, Texas Instruments Incorporated

### 4.18.2 PLL Registers Description(s)

Table 4-43 is a list of the PLL registers. For more information about these registers, see the *SM320C6727B DSP Software-Programmable Phase-Locked Loop (PLL) Controller Reference Guide* (literature number SPRU879).

**Table 4-43. PLL Controller Registers**

| BYTE ADDRESS | REGISTER NAME | DESCRIPTION |
|---|---|---|
| 0x4100 0000 | PLLPID | PLL controller peripheral identification register |
| 0x4100 0100 | PLLCSR | PLL control/status register |
| 0x4100 0110 | PLLM | PLL multiplier control register |
| 0x4100 0114 | PLLDIV0 | PLL controller divider register 0 |
| 0x4100 0118 | PLLDIV1 | PLL controller divider register 1 |
| 0x4100 011C | PLLDIV2 | PLL controller divider register 2 |
| 0x4100 0120 | PLLDIV3 | PLL controller divider register 3 |
| 0x4100 0138 | PLLCMD | PLL controller command register |
| 0x4100 013C | PLLSTAT | PLL controller status register |
| 0x4100 0140 | ALNCTL | PLL controller clock align control register |
| 0x4100 0148 | CKEN | Clock enable control register |
| 0x4100 014C | CKSTAT | Clock status register |
| 0x4100 0150 | SYSTAT | SYSCLK status register |

Copyright © 2014, Texas Instruments Incorporated

# 5 Application Example

Figure 5-1 illustrates a high-level block diagram of the device and other devices to which it may typically connect. See Section 1.2 for an overview of each major block.

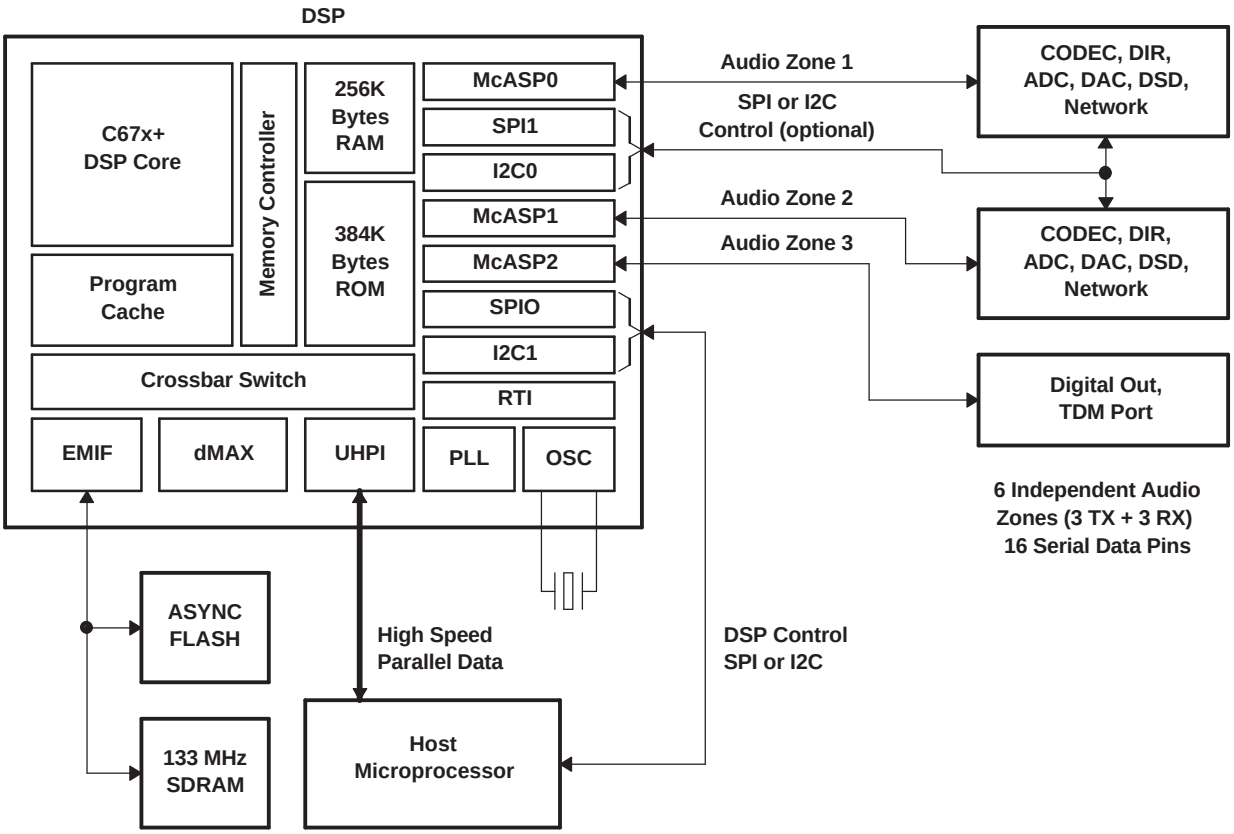


**Figure 5-1. SM320C6727B Audio DSP System Diagram**


Copyright © 2014, Texas Instruments Incorporated

# 6 Mechanical Data

## 6.1 Package Thermal Resistance Characteristics

Table 6-1 provides the thermal characteristics for the HFH package.

**Table 6-1. Thermal Characteristics**

| | | °C/W | AIR FLOW (m/s) |
|---|---|---|---|
| Two-Signal, Two-Plane, 101.5 x 114.5 x 1.6 mm , 2-oz Cu. EIA/JESD51-9 PCB | | | |
| $R\theta_{JC}$ | Thermal Resistance Junction to Top of Case | 2.2 | 0 |

## PACKAGING INFORMATION

| Orderable part number | Status (1) | Material type (2) | Package \| Pins | Package qty \| Carrier | RoHS (3) | Lead finish/ Ball material (4) | MSL rating/ Peak reflow (5) | Op temp (°C) | Part marking (6) |
|---|---|---|---|---|---|---|---|---|---|
| SM320C6727BHFHM | Obsolete | Production | CFP (HFH) \| 256 | - | - | Call TI | Call TI | -55 to 125 | SM320C6727BHFHM |

(1) **Status:** For more details on status, see our product life cycle.

(2) **Material type:** When designated, preproduction parts are prototypes/experimental devices, and are not yet approved or released for full production. Testing and final process, including without limitation quality assurance, reliability performance testing, and/or process qualification, may not yet be complete, and this item is subject to further changes or possible discontinuation. If available for ordering, purchases will be subject to an additional waiver at checkout, and are intended for early internal evaluation purposes only. These items are sold without warranties of any kind.

(3) **RoHS values:** Yes, No, RoHS Exempt. See the TI RoHS Statement for additional information and value definition.

(4) **Lead finish/Ball material:** Parts may have multiple material finish options. Finish options are separated by a vertical ruled line. Lead finish/Ball material values may wrap to two lines if the finish value exceeds the maximum column width.

(5) **MSL rating/Peak reflow:** The moisture sensitivity level ratings and peak solder (reflow) temperatures. In the event that a part has multiple moisture sensitivity ratings, only the lowest level per JEDEC standards is shown. Refer to the shipping label for the actual reflow temperature that will be used to mount the part to the printed circuit board.

(6) **Part marking:** There may be an additional marking, which relates to the logo, the lot trace code information, or the environmental category of the part.

Multiple part markings will be inside parentheses. Only one part marking contained in parentheses and separated by a "~" will appear on a part. If a line is indented then it is a continuation of the previous line and the two combined represent the entire part marking for that device.

**Important Information and Disclaimer:**The information provided on this page represents TI's knowledge and belief as of the date that it is provided. TI bases its knowledge and belief on information provided by third parties, and makes no representation or warranty as to the accuracy of such information. Efforts are underway to better integrate information from third parties. TI has taken and continues to take reasonable steps to provide representative and accurate information but may not have conducted destructive testing or chemical analysis on incoming materials and chemicals. TI and TI suppliers consider certain information to be proprietary, and thus CAS numbers and other limited information may not be available for release.

In no event shall TI's liability arising out of such information exceed the total purchase price of the TI part(s) at issue in this document sold by TI to Customer on an annual basis.

**OTHER QUALIFIED VERSIONS OF SM320C6727B :**

- Catalog : TMS320C6727B
- Enhanced Product : SM320C6727B-EP

NOTE: Qualified Version Definitions:

- Catalog - TI's standard catalog product
- Enhanced Product - Supports Defense, Aerospace and Medical Applications

MCFP026B – JANUARY 1995 – REVISED JUNE 1999

**HFH (R-CQFP-F256)** **CERAMIC QUAD FLATPACK WITH NCTB**

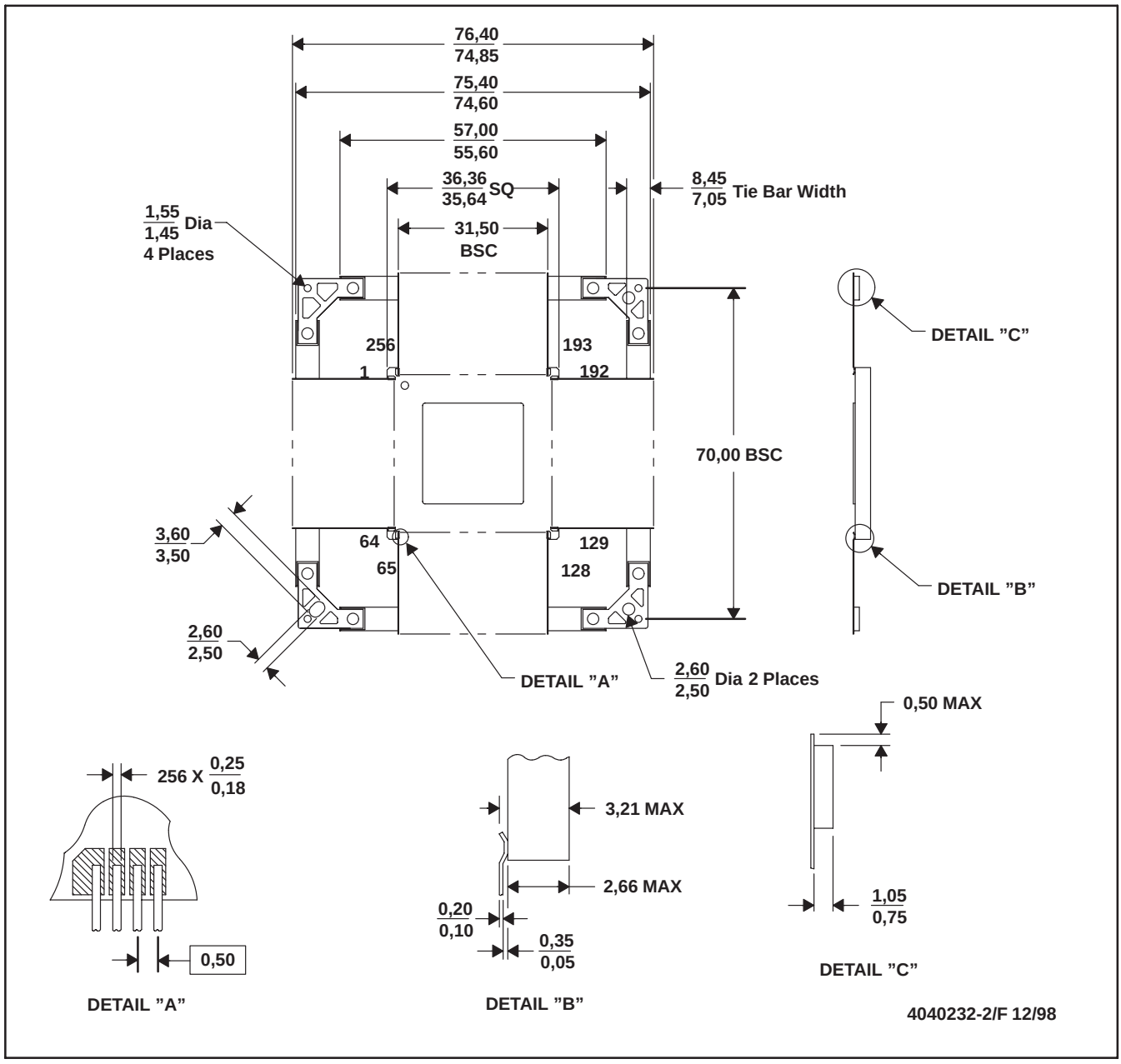


NOTES: A. All linear dimensions are in millimeters.
B. This drawing is subject to change without notice.
C. This package is hermetically sealed with a metal lid.
D. The terminals are gold-plated.
E. Leads not shown for clarity purposes
F. Falls within JEDEC MO-134AB

# IMPORTANT NOTICE AND DISCLAIMER

TI PROVIDES TECHNICAL AND RELIABILITY DATA (INCLUDING DATASHEETS), DESIGN RESOURCES (INCLUDING REFERENCE DESIGNS), APPLICATION OR OTHER DESIGN ADVICE, WEB TOOLS, SAFETY INFORMATION, AND OTHER RESOURCES “AS IS” AND WITH ALL FAULTS, AND DISCLAIMS ALL WARRANTIES, EXPRESS AND IMPLIED, INCLUDING WITHOUT LIMITATION ANY IMPLIED WARRANTIES OF MERCHANTABILITY, FITNESS FOR A PARTICULAR PURPOSE OR NON-INFRINGEMENT OF THIRD PARTY INTELLECTUAL PROPERTY RIGHTS.

These resources are intended for skilled developers designing with TI products. You are solely responsible for (1) selecting the appropriate TI products for your application, (2) designing, validating and testing your application, and (3) ensuring your application meets applicable standards, and any other safety, security, regulatory or other requirements.

These resources are subject to change without notice. TI grants you permission to use these resources only for development of an application that uses the TI products described in the resource. Other reproduction and display of these resources is prohibited. No license is granted to any other TI intellectual property right or to any third party intellectual property right. TI disclaims responsibility for, and you fully indemnify TI and its representatives against any claims, damages, costs, losses, and liabilities arising out of your use of these resources.

TI’s products are provided subject to TI’s Terms of Sale, TI’s General Quality Guidelines, or other applicable terms available either on ti.com or provided in conjunction with such TI products. TI’s provision of these resources does not expand or otherwise alter TI’s applicable warranties or warranty disclaimers for TI products. Unless TI explicitly designates a product as custom or customer-specified, TI products are standard, catalog, general purpose devices.

TI objects to and rejects any additional or different terms you may propose.

Copyright © 2025, Texas Instruments Incorporated

Last updated 10/2025

## Looking for pricing, stock, or lifecycle information?

Click below to explore more details on WIN SOURCE:

- View SM320C6727BHFHM on WIN SOURCE
- Texas Instruments Information

## Optimize Your Supply Chain with WIN SOURCE Solutions

- Global Sourcing Solution
- Obsolete Management
- Cost Control Management
- Shortage Management
- Alternative Solution
- Excess Inventory Management