TPS65917-Q1 Power Management Unit (PMU) for Processor

1 Device Overview

1.1 Features

- Qualified for Automotive Applications
- AEC-Q100 Qualified With the Following Results:
  - Device Temperature Grade 2: –40°C to +105°C Ambient Operating Temperature Range
  - Device HBM Classification Level 2
  - Device CDM Classification Level C4B
- System Voltage Range from 3.135 V to 5.25 V
- Low-Power Consumption
  - 20 μA in Off Mode
  - 90 μA in Sleep Mode With Two SMPSs Active
- Five Step-Down Switched-Mode Power Supply (SMPS) Regulators:
  - 0.7- to 3.3-V Output Range in 10- or 20-mV Steps
  - Two SMPS Regulators With 3.5-A Capability, With the Ability to Combine into 7-A Output in Dual-Phase Configuration, With Differential Remote Sensing (Output and Ground)
  - Three Other SMPS Regulators with 3-A, 2-A, and 1.5-A Capabilities
  - Dynamic Voltage Scaling (DVS) Control and Output Current Measurement in 3.5-A and 3-A SMPS Regulators
  - Hardware and Software Controlled Eco-mode™ Supplying up to 5 mA
  - Short-Circuit Protection
  - Power-Good Indication (Voltage and Overcurrent Indication)
  - Internal Soft-Start for In-Rush Current Limitation
  - Ability to Synchronize to External Clock between 1.7 MHz and 2.7 MHz
- Five Low-Dropout (LDO) Linear Regulators:
  - 0 .9- to 3.3-V Output Range in 50-mV steps
  - Two With 300-mA Capability and Bypass Mode
  - One With 100-mA Capability and Capable of Low-Noise Performance up to 50 mA
  - Two Other LDOs With 200-mA Current Capability
  - Short-Circuit Protection
- 12-Bit Sigma-Delta General-Purpose ADC (GPADC) With 8 Input Channels (2 external)
- Thermal Monitoring With High Temperature Warning and Thermal Shutdown
- Power Sequence Control:
  - Configurable Power-Up and Power-Down Sequences (OTP)
  - Configurable Sequences Between the SLEEP and ACTIVE State Transition (OTP)
  - Three Digital Output Signals that can be Included in the Startup Sequence
- Selectable Control Interface:
  - One SPI for Resource Configurations and DVS Control
  - Two I^2C Interfaces.
    - One Dedicated for DVS Control
    - One General Purpose I^2C Interface for Resource Configuration and DVS Control
- OTP Bit-Integrity Error Detection With Options to Proceed or Hold Power-Up Sequence and RESET_OUT Release
- Package Option:
  - 7-mm × 7-mm 48-pin VQFN With 0.5-mm Pitch

1.2 Applications

- Automotive Digital Cluster
- Automotive Advanced Driver Assistance System (ADAS)
- Automotive Navigation Systems

1.3 Description

The TPS65917-Q1 PMIC integrates five configurable step-down converters with up to 3.5 A of output current to power the processor core, memory, I/O, and preregulation of LDOs The device is AEC-Q100 qualified. The step-down converters are synchronized to an internal 2.2-MHz clock to improve EMC performance of the device. The GPIO_3 pin allows the step-down converters to synchronize to an external clock, allowing multiple devices to synchronize to the same clock which improves system-level EMC performance. The device also contains five LDOs to power low-current or low-noise domains.

An IMPORTANT NOTICE at the end of this data sheet addresses availability, warranty, changes, use in safety-critical applications, intellectual property matters and other important disclaimers. PRODUCTION DATA.

The power-sequence controller uses one-time programmable (OTP) memory to control the power sequences, as well as default configurations such as output voltage and GPIO configurations. The OTP is factory-programmed to allow start-up without any software required. Most static settings can be changed from the default through SPI or I^2C to configure the device to meet many different system needs. For example, voltage-scaling registers are used to support dynamic voltage-scaling requirements of processors.As an additional safety feature, the he OTP also contains a bit-integrity-error detection feature to stop the power-up sequence if an error is detected, preventing the system from starting in an unknown state.

The TPS65917-Q1 device also includes an analog-to-digital converter (ADC) to monitor the system state. The GPADC includes two external channels to monitor any external voltage, as well as internal channels to measure supply voltage, output current, and die temperature, allowing the processor to monitor the health of the system. The device offers a watchdog to monitor for software lockup, and includes protection and diagnostic mechanisms such as short-circuit protection, thermal monitoring, shutdown, and automatic ADC conversions to detect if a voltage is below a predefined threshold. The PMIC can notify the processor of these events through the interrupt handler, allowing the processor to take action in response.

Device Information(1)

PART NUMBER	PACKAGE	BODY SIZE (NOM)
TPS65917-Q1	VQFN (48)	7.00 mm × 7.00 mm

(1) For all available packages, see the orderable addendum at the end of the data sheet.

Copyright © 2015–2019, Texas Instruments Incorporated

1.4 Functional Diagram

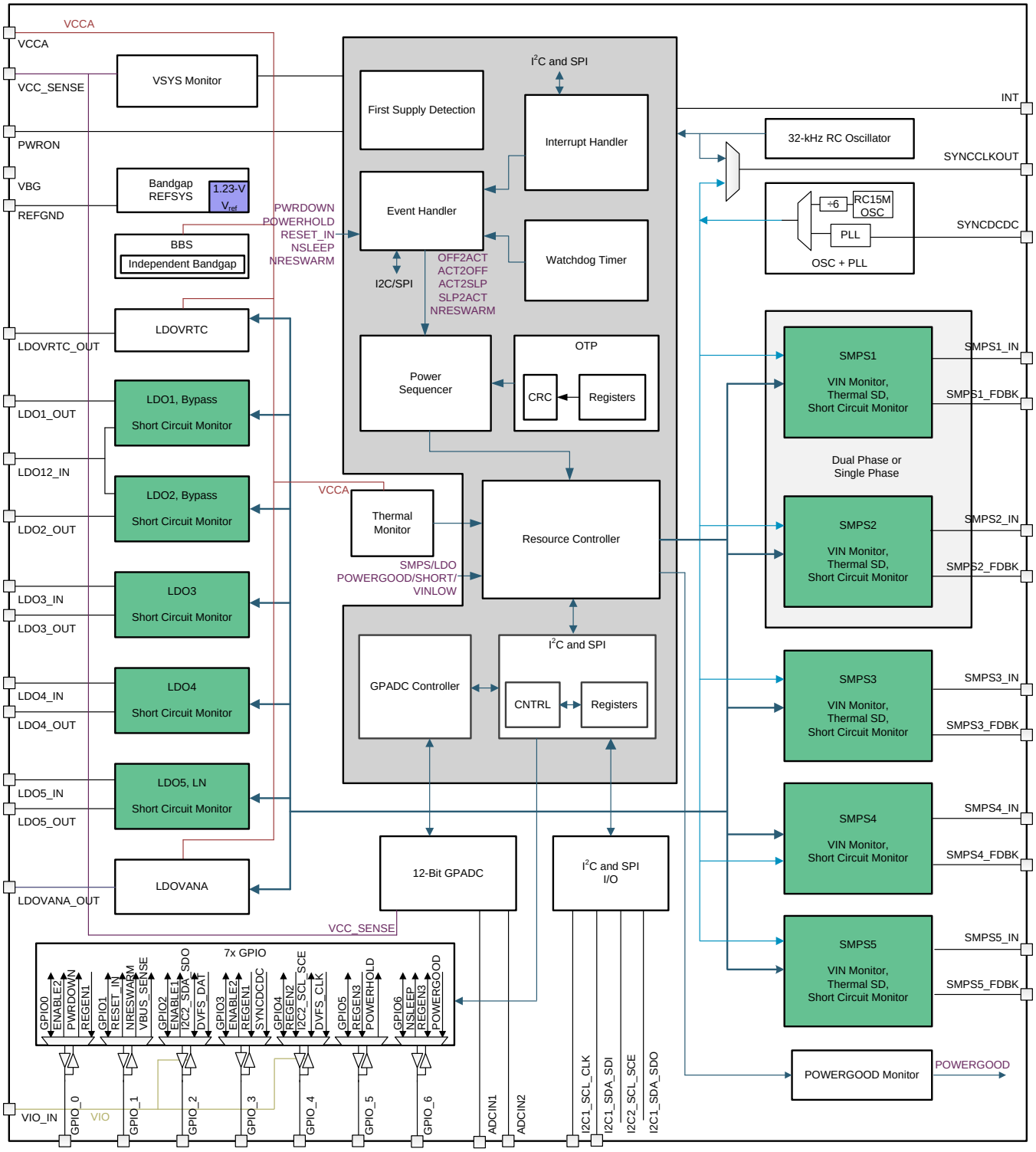

Figure 1-1. Functional Diagram

Table of Contents

1 Device Overview 1
1.1 Features 1
1.2 Applications 1
1.3 Description 1
1.4 Functional Diagram 3
2 Revision History 5
3 Pin Configuration and Functions 6
3.1 Pin Attributes 6
3.2 Signal Descriptions 9
4 Specifications 12
4.1 Absolute Maximum Ratings 12
4.2 ESD Ratings 12
4.3 Recommended Operating Conditions 12
4.4 Thermal Information 13
4.5 Electrical Characteristics — LDO Regulators 13
4.6 Electrical Characteristics — SMPS1&2 in Dual-Phase Configuration 15
4.7 Electrical Characteristics — SMPS1, SMPS2, SMPS3, SMPS4, and SMPS5 Stand-Alone Regulators 16
4.8 Electrical Characteristics — Reference Generator (Bandgap) 17
4.9 Electrical Characteristics — 32-kHz RC Oscillators and SYNCCLKOUT Output Buffers 17
4.10 Electrical Characteristics — 12-Bit Sigma-Delta ADC 18
4.11 Electrical Characteristics — Thermal Monitoring and Shutdown 18
4.12 Electrical Characteristics — System Control Thresholds 19
4.13 Electrical Characteristics — Current Consumption 19
4.14 Electrical Characteristics — Digital Input Signal Parameters 19
4.15 Electrical Characteristics — Digital Output Signal Parameters 20
4.16 I/O Pullup and Pulldown Characteristics 20
4.17 Electrical Characteristics — I^2C Interface 20
4.18 Timing Requirements — I^2C Interface 21
4.19 Timing Requirements — SPI 22
4.20 Switching Characteristics — LDO Regulators 22
4.21 Switching Characteristics — SMPS1&2 in Dual-Phase Configuration 22
4.22 Switching Characteristics — SMPS1, SMPS2, SMPS3, SMPS4, and SMPS5 Stand-Alone Regulators 23
4.23 Switching Characteristics — Reference Generator (Bandgap) 23
4.24 Switching Characteristics — PLL for SMPS Clock Generation 23
4.25 Switching Characteristics — 32-kHz RC Oscillators and SYNCCLKOUT Output Buffers 23
4.26 Switching Characteristics — 12-Bit Sigma-Delta ADC 24
4.27 Typical Characteristics 26
5 Detailed Description 29
5.1 Overview 29
5.2 Functional Block Diagram 30
5.3 Device State Machine 31
5.4 Power Resources (Step-Down and Step-Up SMPS Regulators, LDOs) 41
5.5 SMPS and LDO Input Supply Connections 50
5.6 First Supply Detection 50
5.7 Long-Press Key Detection 51
5.8 12-Bit Sigma-Delta General-Purpose ADC (GPADC) 51
5.9 General-Purpose I/Os (GPIO Pins) 55
5.10 Thermal Monitoring 56
5.11 Interrupts 57
5.12 Control Interfaces 60
5.13 OTP Configuration Memory 65
5.14 Watchdog Timer (WDT) 65
5.15 System Voltage Monitoring 66
5.16 Register Map 69
5.17 Device Identification 69
6 Applications, Implementation, and Layout 70
6.1 Application Information 70
6.2 Typical Application 71
6.3 Layout 79
6.4 Power Supply Coupling and Bulk Capacitors 82
7 Device and Documentation Support 83
7.1 Device Support 83
7.2 Documentation Support 83
7.3 Receiving Notification of Documentation Updates 84
7.4 Community Resources 84
7.5 Trademarks 84
7.6 Electrostatic Discharge Caution 84
7.7 Glossary 84
8 Mechanical, Packaging, and Orderable Information 84

Copyright © 2015–2019, Texas Instruments Incorporated

2 Revision History

NOTE: Page numbers for previous revisions may differ from page numbers in the current version.

Changes from Revision C (March 2017) to Revision D — **Page**

- Added footnote recommending not to pull open-drain GPIOs up to an always-on voltage domain 9
- Clarified that LDO1 and LDO2 input pins are not included in this minimum recommended operating voltage. See *Electrical Characteristics: LDO Regulators* for more information. 12
- Added LDO and SMPS output capacitance footnote 13
- Added SMPS Output voltage slew rate description 15
- Changed the comparison condition from VCCA to VCC_SENSE in the *Embedded Power Controller* section 32
- Added typical debounce time from POWERHOLD to the enable of the first rail in the power sequence. 33
- Changed discharge resistance to match electrical characteristics table 42
- Changed description of clock dithering from internal to external only 44
- Added information about shutdown timing during short circuit detection 45
- Updated POWERGOOD block diagram and description to clarify dual phase operation. 46
- Added notes to the *SMPS Controls for DVS* image 48
- Added the equation to convert GPADC code to internal die temperature in the *12-Bit Sigma-Delta General-Purpose ADC (GPADC)* section 52
- Additional description of VSYS_LO functionality 66
- Added details on identifying device version. 69
- SMPS and LDO output capacitance specification further explained 74
- Added design considerations for VCCA capacitance to support loss of power 74
- Corrected 9-Vpp with 7V absolute maximum specification in the *Layout Guidelines* section 79
- Updated requirements relating to measurement of high-side and low-side FETs in the *Layout Guidelines* section 80
- Updated images and description on differential measurements across high-side and low-side FETs 81

Changes from Revision B (November 2015) to Revision C — **Page**

- First public release of full data sheet 1
- Added recommendation for external pulldown resistor on the LDOVRTC_OUT pin in the *Pin Attributes* table 7
- Added OTP to the PU/PD selection for GPIO_1 as NRESWARM in the *Signal Descriptions* table 9
- Changed the caption of the *SMPS Efficiency For SMPS1 and SMPS 2 in Dual-Phase PWM Mode* graph to *SMPS Load Regulation for SMPS1 and SMPS2 Single-Phase PWM Mode* in the *Typical Characteristics* section 26
- Added the *SMPS Load regulation for SMPS3, PWM Mode* graph to the *Typical Characteristics* section 26
- Changed single-phase to dual-phase and increased the output current to 7 A in the *SMPS Load Regulation for SMPS12* graph in the *Typical Characteristics* section 26
- Changed the debounce for PWRON to N/A in the *ON Requests* table 33
- Added description of VIO power-up timing in the *Device Power Up Timing* section 37
- Changed the description of the LDOVRTC when in the BACKUP and OFF states and added a note in the *LDOVRTC* section 50
- Added the note and pulldown equations to the *System Voltage Monitoring* section 67
- Changed the SMPS1 voltage, SMPS2 voltage, and LDO2 voltage in the *Design Parameters* table 72
- Changed the *Electrostatic Discharge Caution* statement 84

Changes from Revision A (November 2015) to Revision B — **Page**

- Added statement to the *Current Monitoring and Short Circuit Detection* section that the SMPS_SHORT_REGISTER bit will keep a resource off until it is cleared 45

Changes from Original (July 2015) to Revision A — **Page**

- Deleted the PPU type and changed the connection from floating to VRTC for the GPIO_1 pin when used only as an input with the secondary function as NRESWARM 7
- Updated Max value of Device Off Mode Current Consumption from 45 µA to 55 µA 19
- Changed the units for the x axis from mA to A in graphs D002 to D008 in the *Typical Characteristics* section 26
- Added register names for the GPADC channel 3 D1 & D2 trim when HIGH_VCC_SENSE = 1 55

Copyright © 2015–2019, Texas Instruments Incorporated

3 Pin Configuration and Functions

Figure 3-1 shows the 48-pin RGZ plastic quad-flatpack no-lead (VQFN) pin assignments and thermal pad.

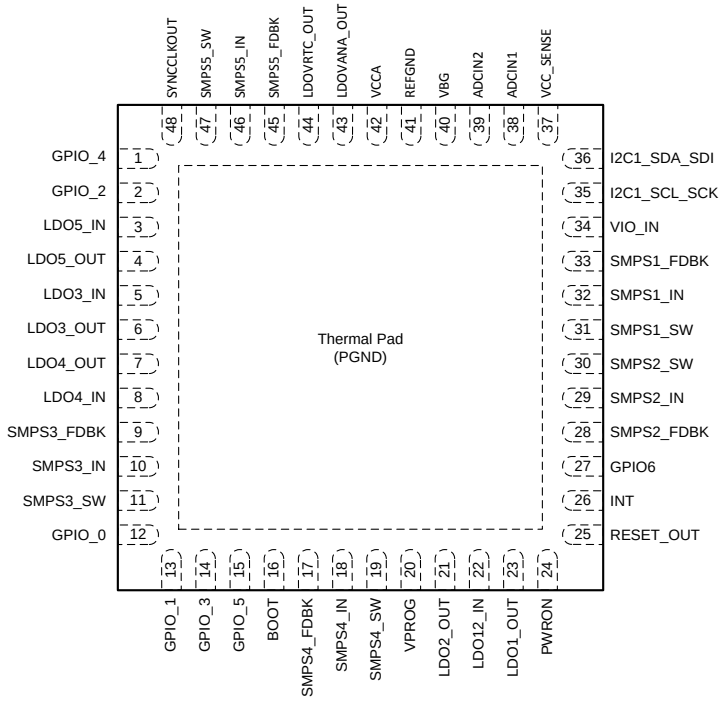

Figure 3-1. 48-Pin RGZ (VQFN) Package, 0.5-mm Pitch, With Thermal Pad (Top View)

3.1 Pin Attributes

Pin Attributes

PIN		I/O	DESCRIPTION	CONNECTION IF NOT USED	PU/PD(1)
NAME	NO.				
REFERENCE					
REFGND	41	—	System reference ground	Ground	—
VBG	40	O	Bandgap reference voltage	—	—
STEP-DOWN CONVERTERS (SMPSs)					
SMPS1_IN	32	I	Power input for SMPS1	System supply	—
SMPS1_FDBK	33	I	Output voltage-sense (feedback) input for SMPS1 or differential voltage-sense (feedback) positive input for SMPS12 in dual-phase configuration	Ground	—
SMPS1_SW	31	O	Switch node of SMPS1; connect output inductor	Floating	—
SMPS2_IN	29	I	Power input for SMPS2	System supply	—
SMPS2_FDBK	28	I	Output voltage-sense (feedback) input for SMPS2 or differential voltage-sense (feedback) negative input for SMPS12 in dual-phase configuration	Ground	—
SMPS2_SW	30	O	Switch node of SMPS2; connect output inductor	Floating	—
SMPS3_IN	10	I	Power input for SMPS3	System supply	—
SMPS3_FDBK	9	I	Output voltage-sense (feedback) input for SMPS3	Floating	—
SMPS3_SW	11	O	Switch node of SMPS3; connect output inductor	Floating	—
SMPS4_IN	18	I	Power input for SMPS4	System supply	—

(1) The PU/PD column shows the pullup and pulldown resistors on the digital input lines. Pullup and pulldown resistors: PU = Pullup, PD = Pulldown, PPU = Software-programmable pullup, PPD = Software-programmable pulldown.

Copyright © 2015–2019, Texas Instruments Incorporated

Pin Attributes (continued)

PIN		I/O	DESCRIPTION	CONNECTION IF NOT USED	PU/PD(1)
NAME	NO.				
SMPS4_FDBK	17	I	Output voltage-sense (feedback) input for SMPS4	Ground	—
SMPS4_SW	19	O	Switch node of SMPS4; connect output inductor	Floating	—
SMPS5_IN	46	I	Power input for SMPS5	System supply	—
SMPS5_FDBK	45	I	Output voltage-sense (feedback) input for SMPS5	Ground	—
SMPS5_SW	47	O	Switch node of SMPS5; connect output inductor	Floating	—
LOW-DROPOUT REGULATORS					
LDO12_IN	22	I	Power input voltage for LDO1 and LDO2 regulators	System supply	—
LDO1_OUT	23	O	LDO1 output voltage	Floating	—
LDO2_OUT	21	O	LDO2 output voltage	Floating	—
LDO3_IN	5	I	Power input voltage for LDO3 regulator	System supply	—
LDO3_OUT	6	O	LDO3 output voltage	Floating	—
LDO4_IN	8	I	Power input voltage for LDO4 regulator	System supply	—
LDO4_OUT	7	O	LDO4 output voltage	Floating	—
LDO5_IN	3	I	Power input voltage for LDO5 regulator	System supply	—
LDO5_OUT	4	O	LDO5 output voltage	Floating	—
LOW-DROPOUT REGULATORS (INTERNAL)					
LDOVRTC_OUT	44	O	LDOVRTC output voltage. To support rapid power off and on, connect a pulldown resistor on the LDOVRTC_OUT pin. See Section 5.15 for more details.	—	—
LDOVANA_OUT	43	O	LDOVANA output voltage	—	—
GPADC					
ADCIN1	38	I	GPADC input 1	Ground	—
ADCIN2	39	I	GPADC input 2	Ground	—
CLOCKING					
SYNCCLKOUT	48	O	Primary function: 2.2-MHz fallback switching frequency for SMPS Secondary function: 32-kHz digital-gated output clock when VIO_IN input supply is present	Floating	—
SYSTEM CONTROL					
BOOT	16	I	Boot ball for power-up sequence selection	Ground or VRTC	—
GPIO_0	12	I/O	Primary function: General-purpose input(2) and output	Ground or VRTC	PPD
		I	Secondary function: ENABLE2 which is the peripheral power request input 2	Floating	PPD(2)
			Secondary function: PWRDOWN input	Ground or VIO	PPD
		O	Secondary function: REGEN1 which is the external regulator enable output 1	Floating	—
GPIO_1	13	I/O	Primary function: General-purpose input(2) and output	Floating	PPD
		I	Secondary function: RESET_IN which is the reset input	Floating	PPD
			Secondary function: VBUS_SENSE input	Ground or VIO	—
			Secondary function: NRESWARM which is the warm reset input	VRTC	PPD
GPIO_2	2	I/O	Primary function: General-purpose input(2) and output	Floating	PPU PPD
		I	Secondary function: ENABLE1 which is the peripheral power request input 1	Floating	PPU PPD(2)
		I/O	Secondary function: I2C2_SDA_SDO which is the DVS I^2C serial bidirectional data (external pullup) and the SPI output data signal	Floating	—

(2) Default option.

Copyright © 2015–2019, Texas Instruments Incorporated

Pin Attributes (continued)

PIN		I/O	DESCRIPTION	CONNECTION IF NOT USED	PU/PD[1]
NAME	NO.				
GPIO_3	14	I/O	Primary function: General-purpose input[2] and output	Floating	PPD
		O	Secondary function: REGEN1 which is the external regulator enable output 1	Floating	—
		I	Secondary function: ENABLE2 which is the peripheral power request input 2		PPD[2]
		I	Secondary function: SYNCDCDC which is the synchronization signal for SMPS switching	Floating	PPD[2]
GPIO_4	1	I/O	Primary function: General-purpose input[2] and output	Floating	PPU PPD
		O	Secondary function: REGEN2 which is the external regulator enable output 2	Floating	—
		I	Secondary function: I2C2_SCL_SCE which is the DVS I^2C serial clock (external pullup) and the SPI chip enable signal	Floating	—
GPIO_5	15	I/O	Primary function: General-purpose input[2] and output	Ground	PPD
		I	Secondary function: POWERHOLD input	Ground or VIO	PPD
		O	Secondary function: REGEN3 which is the external regulator enable output 3	Floating	—
GPIO_6	27	I/O	Primary function: General-purpose input[2] and output	Ground	PPD
		I	Secondary function: NSLEEP request signal	Floating	PPU[2] PPD
		O	Secondary function: POWERGOOD which is the indication signal for valid regulator output voltages	Floating	—
		O	Secondary function: REGEN3 which is the external regulator enable output 3	Floating	—
I2C1_SCL_SCK	35	I	Control I^2C serial clock (external pullup) and SPI clock signal	—	—
I2C1_SDA_SDI	36	I/O	Control I^2C serial bidirectional data (external pullup) and SPI input data signal	—	—
INT	26	O	Maskable interrupt output request to the host processor	—	—
PWRON	24	I	External power-on event (on-button switch-on event)	Floating	PU
RESET_OUT	25	O	System reset or power on output (low = reset, high = active or sleep)	Floating	—
PROGRAMMING, TESTING					
VPROG	20	I	Primary function: OTP programming voltage	Ground or floating	—
		O	Secondary function: TESTV	Floating	—
POWER SUPPLIES					
VCCA	42	I	Analog input voltage for internal LDOs	System supply	—
VCC_SENSE	37	I	System supply sense line	System supply	—
VIO_IN	34	I	Digital supply input for GPIOs and I/O supply voltage	N/A	—

Copyright © 2015–2019, Texas Instruments Incorporated

3.2 Signal Descriptions

Table 3-1. Signal Descriptions

SIGNAL NAME	LEVEL	I/O(1)	INPUT PU/PD(2)	PU/PD SELECTION	OUTPUT TYPE SELECTION	ACTIVITY	OTP POLARITY SELECTION
PWRON	VSYS (VCCA)	Input	PU fixed	N/A (fixed)	N/A (input)	Low	No
BOOT	VRTC	Tri-level input	N/A (input)	N/A (input)	N/A (input)	Boot conf.	No
GPIO_0 (primary function)	VRTC, fail-safe (5.25-V tolerance)	Input(1)/output	PPD	OTP/SW	Open-drain	Low or high	Yes
GPIO_0 secondary function: PWRDOWN		Input	PPD (Opt. Ext. PU)	OTP/SW	N/A (input)	High	Yes
GPIO_0 secondary function: ENABLE2		Input	PPD(1)	SW	N/A (input)	High	No, but software possible
GPIO_0 secondary function: REGEN1(3)		Output	N/A (output)	N/A (output)	Open-drain	High	No
GPIO_1 (primary function)	VRTC, fail-safe (5.25-V tolerance)	Input(1)/output	PPD	OTP/SW	Open-drain	Low or high	Yes
GPIO_1 secondary function: RESET_IN		Input	PPD	OTP/SW	N/A (input)	Low	Yes
GPIO_1 secondary function: NRESWARM		Input	PPD	OTP/SW	N/A (input)	Low or high	Yes
GPIO_1 secondary function: VBUS_SENSE		Input	No	No	N/A (input)	High	No

(1) Default option.
(2) Pullup and pulldown resistors: PU = Pullup, PD = Pulldown, PPU = Software-programmable pullup, PPD = Software-programmable pulldown.
(3) This pin should not be pulled up to an always-on voltage domain. Before OTP is loaded, this will be configured as an input, and an active pull-up domain will pull this pin to a high level.

Copyright © 2015–2019, Texas Instruments Incorporated

Table 3-1. Signal Descriptions (continued)

SIGNAL NAME	LEVEL	I/O[1]	INPUT PU/PD[2]	PU/PD SELECTION	OUTPUT TYPE SELECTION	ACTIVITY	OTP POLARITY SELECTION
GPIO_2 (primary function)	VIO (VIO_IN)	Input[1]/output	PPU/PPD	OTP/SW	Push-pull[1] or open-drain	Low or high	Yes
GPIO_2 secondary function: ENABLE1		Input	PPU/PPD[1]	SW	N/A (input)	High	No, but software possible
GPIO_2 secondary function: I2C2_SDA_SDO		Input/output	No	No	Open-drain	High	No
GPIO_3 (primary function)	VRTC, fail-safe (5.25-V tolerance)	Input[1]/output	PPD	OTP/SW	Open-drain	Low or high	Yes
GPIO_3 secondary function: ENABLE2		Input	PPD[1]	SW	N/A (input)	High	No, but software possible
GPIO_3 secondary function: REGEN1[3]		Output	N/A (output)	N/A (output)	Open-drain	High	No
GPIO_3 secondary function: SYNCDCDC		Input	PPD[1]	SW	N/A (input)	Toggling	No
GPIO_4 (primary function)	VIO (VIO_IN)	Input[1]/output	PPU/PPD	OTP/SW	Push-pull[1] or open-drain	Low or high	Yes
GPIO_4 secondary function: REGEN2		Output	N/A (output)	N/A (output)	Push-pull[1] or open-drain	High	No
GPIO_4 secondary function: I2C2_SCL_SCE		Input	No	No	N/A (input)	High	No

Copyright © 2015–2019, Texas Instruments Incorporated

Table 3-1. Signal Descriptions (continued)

SIGNAL NAME	LEVEL	I/O[1]	INPUT PU/PD[2]	PU/PD SELECTION	OUTPUT TYPE SELECTION	ACTIVITY	OTP POLARITY SELECTION
GPIO_5 (primary function)	VRTC, fail-safe (5.25-V tolerance)	Input[1]/output	PPD	OTP/SW	Open-drain	Low or high	Yes
GPIO_5 secondary function: POWERHOLD		Input	PPD[1]	SW	N/A (input)	High	Yes
GPIO_5 secondary function: REGEN3[3]		Output	N/A (output)	N/A (output)	Open-drain	High	No
GPIO_6 (primary function)	VRTC	Input[1]/output	PPD	OTP/SW	Open-drain	Low or high	Yes
GPIO_6 secondary function: NSLEEP		Input	PPU[1]/PPD	SW	N/A (input)	Low	Yes
GPIO_6 secondary function: POWERGOOD[3]		Output	N/A (output)	N/A (output)	Open-drain	Low or high	Yes
GPIO_6 secondary function: REGEN3[3]		Output	N/A (output)	N/A (output)	Open-drain	High	No
RESET_OUT	VIO (VIO_IN)	Output	N/A (output)	N/A (output)	Push-pull[1] or open-drain	Low	No
INT	VIO (VIO_IN)	Output	N/A (output)	N/A (output)	Push-pull[1] or open-drain	Low	No, but software possible
SYNCCLKOUT	VRTC	Output	N/A (output)	N/A (output)	Push-pull	Toggling	No
I2C1_SDA_SDI	VIO (VIO_IN)	Input/output	No	No	Open-drain	High	No
I2C1_SCL_CLK	VIO (VIO_IN)	Input	No	No	N/A (input)	High	No
VCC_SENSE	VSYS (VCCA)	Input	No	No	N/A (analog)	Analog	No

Copyright © 2015–2019, Texas Instruments Incorporated

4 Specifications

4.1 Absolute Maximum Ratings

over operating free-air temperature range (unless otherwise noted)(1)

		MIN	MAX	UNIT
Voltage	VCCA	–0.3	6	V
	VCC_SENSE	–0.3	7	
	All LDOs and SMPS supply voltage input pins	–0.3	6	
	SMPSx_SW pins, 10-ns transient	–2	7	
	All SMPS-related input pins _FDBK	–0.3	3.6	
	I/O digital supply voltage (VIO_IN with respect to VIO_GND)	–0.3 VIO_{max} + 0.3	VIO_{max} + 0.3	
	VBUS	–0.3	6	
	GPADC pins: ADCIN1 and ADCIN2	–0.3	2.4	
	OTP supply voltage VPROG	–0.3	7	
	VRTC digital input pins, without fail-safe	–0.3	2.15	
	VRTC digital input pins, with fail-Safe	–0.3	5.25	
	VIO digital input pins (VIO_IN pin reference)	–0.3	VIO_{max} + 0.3	
	VSYS digital input pins (VCCA pin reference)	–0.3	6	
Current	Peak output current on all pins other than power resources	–5	5	mA
	Buck SMPS, SMPSx_IN, SMPSx_SW, and SMPSx_OUT total per phase		4	A
	LDOs		1	
Junction temperature, T_J		–45	150	°C
Storage temperature, T_{stg}		–65	150	°C

(1) Stresses beyond those listed under *Absolute Maximum Ratings* may cause permanent damage to the device. These are stress ratings only, which do not imply functional operation of the device at these or any other conditions beyond those indicated under *Recommended Operating Conditions*. Exposure to absolute-maximum-rated conditions for extended periods may affect device reliability.

4.2 ESD Ratings

			VALUE	UNIT
$V_{(ESD)}$	Electrostatic discharge	Human-body model (HBM), per AEC Q100-002(1)	±2000	V
		Charged-device model (CDM), per AEC Q100-011 All pins	±500	
		Charged-device model (CDM), per AEC Q100-011 Corner pins (1, 12, 13, 24, 25, 36, 37, and 48)	±750	

(1) AEC Q100-002 indicates that HBM stressing shall be in accordance with the ANSI/ESDA/JEDEC JS-001 specification.

4.3 Recommended Operating Conditions

Over operating free-air temperature range (unless otherwise noted).

		MIN	NOM	MAX	UNIT
ELECTRICAL					
System voltage input pin VCCA (named VSYS in the specification)		3.135	3.8	5.25	V
VCC_SENSE, HIGH_VCC_SENSE = 0 (if measured with GPADC, see also Table 5-9)		3.135		VCCA	V
VCC_SENSE, HIGH_VCC_SENSE = 1 (if measured with GPADC, see also Table 5-9)		3.135		VCCA – 1	V
All LDO-related input pins _IN (1)		1.75	3.8	5.25	V
All SMPS-related input pins _IN		3.135	3.8	5.25	V
All SMPS-related input pins _FDBK		0		V_{OUTmax} + 0.3	V
All SMPS-related input pins _FDBK_GND		–0.3		0.3	V
I/O digital supply voltage VIO_IN	VIO = 1.8 V	1.71	1.8	1.89	V
	VIO = 3.3 V	3.135	3.3	3.465	

(1) Does not include LDO1 and LDO2 minimum input voltages.

Copyright © 2015–2019, Texas Instruments Incorporated

Recommended Operating Conditions *(continued)*

Over operating free-air temperature range (unless otherwise noted).

		MIN	NOM	MAX	UNIT
Voltage on the GPADC pins ADCIN1 (channel 0) and ADCIN2 (channel 1)		0		1.25	V
OTP supply voltage VPROG		0	6		V
Voltage on VRTC digital input pins	without fail-safe	0	LDOVRTC	1.85	V
	with fail-safe	0	LDOVRTC	5.25	
Voltage on VIO digital input pin (VIO_IN pin reference)		0	VIO	VIO_{max}	V
Voltage on VSYS digital input pins (VCCA pin reference)		0	3.8	5.25	V
TEMPERATURE					
Operating free-air temperature range(2)		–40	27	105	°C
Junction temperature, T_J	Operational	–40	27	150	°C
	Parametric compliance	–40	27	125	
Storage temperature, T_{stg}		–65	27	150	°C
Lead temperature (soldering, 10 s)			260		°C

(2) Additional cooling strategies may be necessary to maintain junction temperature at recommended limits.

4.4 Thermal Information

THERMAL METRIC(1)		TPS65917-Q1 RGZ (VQFN) 48 PINS	UNIT
$R_{\theta JA}$	Junction-to-ambient thermal resistance	24.8	°C/W
$R_{\theta JC(top)}$	Junction-to-case (top) thermal resistance	5.6	°C/W
$R_{\theta JB}$	Junction-to-board thermal resistance	3.9	°C/W
ψ_{JT}	Junction-to-top characterization parameter	0.1	°C/W
ψ_{JB}	Junction-to-board characterization parameter	3.9	°C/W
$R_{\theta JC(bot)}$	Junction-to-case (bottom) thermal resistance	0.1	°C/W

(1) For more information about traditional and new thermal metrics, see the *Semiconductor and IC Package Thermal Metrics* application report.

4.5 Electrical Characteristics — LDO Regulators

Over operating free-air temperature range, typical values are at T_A = 27°C (unless otherwise noted).

PARAMETER		TEST CONDITIONS		MIN	TYP	MAX	UNIT
	Input filtering capacitance (C18, C19)	Connected from LDOx_IN to GND Shared input tank capacitance (depending on platform requirements)		0.6	2.2		µF
	Output filtering capacitance (C20, C21, C22, C23, C24)(1)	Connected from LDOx_OUT to GND		0.6	2.2	2.7	µF
C_{ESR}	Filtering capacitor ESR	< 100 kHz		20	100	600	mΩ
		1 to 10 MHz		1	10	20	
$V_{IN(LDOx)}$	Input voltage	LDO1, LDO2 from LDO12_IN, Normal Mode	0.9 V ≤ V_{OUT} < 2.2 V	1.2		VCCA	V
			2.2 V ≤ V_{OUT} ≤ 3.3 V	1.2		5.25	
		LDO1, LDO2 from LDO12_IN, Bypass Mode	V_{OUT} = V_{IN}	1.2		3.6	
		LDO3, LDO4, LDO5 from LDO3_IN, LDO4_IN and LDO5_IN	0.9 V ≤ V_{OUT} < 2.2 V	1.75		VCCA	
			2.2 V ≤ V_{OUT} ≤ 3.3 V	1.75		5.25	
$V_{OUT(LDOx)}$	LDO output voltage programmable(2) (except LDOVRTC and LDOVANA)	Range		0.9		3.3	V
		Step size			50		mV
$T_{DCOV(LDOx)}$	Total DC output voltage accuracy, including voltage references, DC load and line regulations, process and temperature	All LDOs except LDOVANA and LDOVRTC $V_{IN(LDOx)}$ ≥ 2.5 V		0.99 × $V_{OUT(LDOx)}$ – 0.014		1.006 × $V_{OUT(LDOx)}$ + 0.014	V
		All LDOs except LDOVANA and LDOVRTC $V_{IN(LDOx)}$ < 2.5 V and $V_{OUT(LDOx)}$ < 1.5 V		0.99 × $V_{OUT(LDOx)}$ – 0.014		1.006 × $V_{OUT(LDOx)}$ + 0.014	

(1) Additional information about how this parameter is specified is located in Section 6.2.2.
(2) LDO output voltages are programmed separately.

Copyright © 2015–2019, Texas Instruments Incorporated

Electrical Characteristics — LDO Regulators *(continued)*

Over operating free-air temperature range, typical values are at T_A = 27°C (unless otherwise noted).

PARAMETER		TEST CONDITIONS		MIN	TYP	MAX	UNIT
$T_{DCOV(LDOx)}$	Total DC output voltage accuracy, including voltage references, DC load and line regulations, process and temperature	LDOVRTC_OUT	–40°C ≤ T_A ≤ 85°C	1.726	1.8	1.85	V
			85°C < T_A ≤ 105°C	1.726	1.8	1.85	
$T_{DCOV(LDOx)}$	Total DC output voltage accuracy, including voltage references, DC load and line regulations, process and temperature	LDOVANA_OUT	–40°C ≤ T_A ≤ 85°C	2.002	2.093	2.14	V
			85°C < T_A ≤ 105°C	2.002	2.093	2.14	
$D_{V(LDOx)}$	Dropout voltage $D_{V(LDOx)} = V_{IN} – V_{OUT}$ where $V_{OUT} = V_{OUTnom} – 2\%$	LDO1, LDO2: $I_{OUT} = I_{OUTmax}$				150	mV
		LDO3, LDO4: $I_{OUT} = I_{OUTmax}$				290	
		LDO5: I_{OUT} = 50 mA				150	
		LDO5: $I_{OUT} = I_{OUTmax}$ (not low-noise performance)				290	
$I_{OUT(LDOx)}$	Output current	LDO1, LDO2				300	mA
		LDO3, LDO4				200	
		LDO5				100	
$I_{OUT(LDOx)}$	Output current, internal LDOs	LDOVANA in Active Mode				10	mA
$I_{OUT(LDOx)}$	Output current, internal LDOs	LDOVRTC in Active Mode				25	mA
$I_{SHORT(LDOx)}$	LDO current limitation	LDO1, LDO2		380	600	1800	mA
		LDO3, LDO4		340	650	1300	
		LDO5		135	325	740	
	LDO inrush current	LDO1, LDO2				500	mA
DC_{LDR}	DC load regulation, ΔV_{OUT}	I_{OUT} = 0 to I_{OUTmax} at pin, LDO1, LDO2	–40°C ≤ T_A ≤ 85°C		4	16	mV
			85°C < T_A ≤ 105°C		4	16	
		I_{OUT} = 0 to I_{OUTmax} at pin, all other LDOs	–40°C ≤ T_A ≤ 85°C		4	14	
			85°C < T_A ≤ 105°C		4	14	
DC_{LNR}	DC line regulation, $\Delta V_{OUT} / V_{OUT}$	$V_{IN} = V_{INmin}$ to V_{INmax}, $I_{OUT} = I_{OUTmax}$	–40°C ≤ T_A ≤ 85°C		0.1%	0.2%	
			85°C < T_A ≤ 105°C		0.1%	0.2%	
		$V_{SYS} = V_{SYSmin}$ to V_{SYSmax}, $I_{OUT} = I_{OUTmax}$. V_{IN}constant (LDO preregulated), V_{OUT} ≤ 2.2 V	–40°C ≤ T_A ≤ 85°C		0.3%	0.75%	
			85°C < T_A ≤ 105°C		0.3%	0.75%	
R_{DIS}	Pulldown discharge resistance at LDO output, except LDOVRTC	Off mode, pulldown enabled and LDO disabled. Applies to bypass mode also.		30		125	Ω
	Power supply ripple rejection (PSRR), LDO1, LDO2	f = 217 Hz, $I_{OUT} = I_{OUTmax}$		55	90		dB
		f = 50 kHz, $I_{OUT} = I_{OUTmax}$		35	45		
		f = 1 MHz, $I_{OUT} = I_{OUTmax}$		25	35		
	Power supply ripple rejection (PSRR), LDO3, LDO4	f = 217 Hz, $I_{OUT} = I_{OUTmax}$		55	90		
		f = 50 kHz, $I_{OUT} = I_{OUTmax}$		25	45		
		f = 1 MHz, $I_{OUT} = I_{OUTmax}$		20	35		
	Power supply ripple rejection (PSRR), LDO5	f = 217 Hz, $I_{OUT} = I_{OUTmax}$		55	90		
		f = 50 kHz, $I_{OUT} = I_{OUTmax}$		25	45		
		f = 1 MHz, $I_{OUT} = I_{OUTmax}$		25	35		
I_{Qoff}	Quiescent current – off mode	For all LDOs, VCCA = $V_{IN(LDOx)}$ = 3.8 V, T_A = 27°C			0.1	0.4	µA
		For all LDOs, VCCA = $V_{IN(LDOx)}$ = 3.8 V, T_A = 85°C			0.2	1.3	
		For all LDOs, VCCA = $V_{IN(LDOx)}$ = 3.8 V, T_A = 105°C			0.2	1.3	
$I_{Qon(LDO)}$	Quiescent current – LDO on mode	I_{LOAD} = 0 mA (LDO1, LDO2), $V_{IN(LDOx)} > V_{OUT(LDOx)} + D_{V(LDOx)}$	–40°C ≤ T_A ≤ 85°C		46	70	µA
			85°C < T_A ≤ 105°C		46	70	
		I_{LOAD} = 0 mA (LDO3, LDO4), $V_{IN(LDOx)} > V_{OUT(LDOx)} + D_{V(LDOx)}$	–40°C ≤ T_A ≤ 85°C		36	47	
			85°C < T_A ≤ 105°C		36	47	
		I_{LOAD} = 0 mA (LDO5) , V_{OUT} ≤ 1.8 V, $V_{IN(LDOx)} > V_{OUT(LDOx)} + D_{V(LDOx)}$	–40°C ≤ T_A ≤ 85°C		140	190	
			85°C < T_A ≤ 105°C		140	190	
		I_{LOAD} = 0 mA (LDO5) , V_{OUT} > 1.8 V, $V_{IN(LDOx)} > V_{OUT(LDOx)} + D_{V(LDOx)}$	–40°C ≤ T_A ≤ 85°C		180	210	
			85°C < T_A ≤ 105°C		180	210	
αQ	Quiescent current coefficient LDO on mode, $I_{Qout} = I_{Qon} + αQ × I_{OUT}$	I_{OUT} < 100 µA			4%		
		100 µA ≤ I_{OUT} < 1 mA			2%		
		I_{OUT} ≥ 1 mA			1%		
T_{LDR}	Transient load regulation, ΔV_{OUT}	On mode, I_{OUT} = 10 mA to I_{OUTmax} / 2, $T_R = T_F$ = 1 µs. All LDOs except LDO5		–25		25	mV
		On mode, I_{OUT} = 1 mA to I_{OUTmax} / 2, $T_R = T_F$ = 1 µs. LDO5		–25		25	
		On mode, I_{OUT} = 100 µA to I_{OUTmax} / 2, $T_R = T_F$ = 1 µs		–50		33	

Copyright © 2015–2019, Texas Instruments Incorporated

Electrical Characteristics — LDO Regulators *(continued)*

Over operating free-air temperature range, typical values are at T_A = 27°C (unless otherwise noted).

PARAMETER		TEST CONDITIONS	MIN	TYP	MAX	UNIT
T_{LNR}	Transient line regulation, ΔV_{OUT} / V_{OUT}	V_{IN} step = 600 mVpp, T_R = T_F = 10 µs		0.25%	0.5%	
		V_{SYS} step = 600 mVpp, T_R = T_F = 10 µs. V_{IN}constant (LDO preregulated), V_{OUT} ≤ 2.2 V		0.8%	1.6%	
	Noise (except LDO5)	100 Hz < f ≤ 10 kHz		5000	8000	nV/√Hz
		10 kHz < f ≤ 100 kHz		1250	2500	
		100 kHz < f ≤ 1 MHz		150	300	
		f > 1 MHz		250	500	
	Noise (LDO5)	100 Hz < f ≤ 5 kHz, I_{OUT} = 50 mA , V_{OUT} ≤ 1.8 V		400	500	nV/√Hz
		5 kHz < f ≤ 400 kHz, I_{OUT} = 50 mA , V_{OUT} ≤ 1.8 V		62	125	
		400 kHz < f ≤ 10 MHz, I_{OUT} = 50 mA , V_{OUT} ≤ 1.8 V		25	50	
	Ripple	LDO1, LDO2, ripple at 32 kHz (from the internal charge pump of 300 mA LDO)			5	mV_{PP}
LDO BYPASS MODE LDO1, LDO2						
	Bypass resistance of 300 mA LDO	2.9 V ≤ V_{IN} ≤ 3.3 V, VSYS ≥ 3.4 V, I_{OUT} = 250 mA, programmed to BYPASS			0.22	Ω
	Bypass resistance of 300 mA LDO	1.75 V ≤ V_{IN} ≤ 1.9 V, I_{OUT} = 75 mA , programmed to BYPASS			0.24	Ω
	Bypass resistance of 300 mA LDO	1.75 V ≤ V_{IN} ≤ 1.9 V, I_{OUT} = 200 mA , programmed to BYPASS			0.24	Ω
	Bypass mode inrush current	Maximum 50 µF load connected to LDOx_OUT			1100	mA
$I_{Qon(bypass)}$	Quiescent current – bypass mode				60	µA
	Slew-rate				60	mV/µs

4.6 Electrical Characteristics — SMPS1&2 in Dual-Phase Configuration

Over operating free-air temperature range, typical values are at T_A = 27°C (unless otherwise noted).[1]

PARAMETER		TEST CONDITIONS	MIN	TYP	MAX	UNIT
	Input capacitance (C8, C9)			4.7		µF
	Output capacitance (C13, C14)[2]	SMPS1&2 input dual phase operation, per phase	33	47	57	µF
C_{ESR}	Filtering capacitor ESR	1 to 10 MHz		2	10	mΩ
	Output filter inductance (L1, L2)	SMPSx_SW	0.7	1	1.3	µH
DCR_L	Filter inductor DC resistance			50	100	mΩ
V_{IN} (SMPSx)	Input voltage range, SMPSx_IN	VSYS (VCCA)	3.135		5.25	V
V_{OUT} (SMPSx)	Output voltage, programmable, SMPSx	RANGE = 0 (value for RANGE must not be changed when SMPS is active). In ECO mode the output voltage values are fixed (defined before ECO mode is enabled). RANGE = 1 is not supported in Multi-phase configuration.	0.7		1.65	V
		Step size, 0.7 V ≤ V_{OUT} ≤ 1.65 V (RANGE = 0)		10		mV
	DC output voltage accuracy, includes voltage references, DC load and line regulation, process and temperature	ECO mode	–3%		4%	
		PWM mode	–1%		2%	
	Ripple, dual phase	Max load, V_{IN} = 3.8 V, V_{OUT} = 1.2 V, ESR_{COUT} = 2 mΩ, measure with 20-MHz LPF		4		mV_{PP}
DC_{LNR}	DC line regulation, ΔV_{OUT} / V_{OUT}	V_{IN} = V_{INmin} to V_{INmax}		0.1		%/V
DC_{LDR}	DC load regulation, ΔV_{OUT} / V_{OUT}	I_{OUT} = 0 to I_{OUTmax}		0.1		%/A
T_{LDSR}	Transient load step response, dual phase	I_{OUT} = 0.8 to 2 A, T_R = T_F = 400 ns, C_{OUT} = 47 µF , L = 1 µH		3%		
		I_{OUT} = 0.5 to 500 mA, T_R = T_F = 100 ns, C_{OUT} = 47 µF , L = 1 µH		3%		
I_{OUTmax}	Rated output current, SMPS1&2	Advance thermal design is required to avoide thermal shut down			7	A
	Maximum output current, ECO mode				5	mA
$I_{LIM\ HS\ FET}$	High-side MOSFET forward current limit	SMPS1&2, each phase	4.2	4.5		A
$I_{LIM\ LS\ FET}$	Low-side MOSFET forward current limit	SMPS1&2, each phase		4.2		A
$R_{DS(ON)\ HS\ FET}$	N-channel MOSFET on-resistance, high-side FET	SMPS1&2, each phase		50		mΩ
$R_{DS(ON)\ LS\ FET}$	N-channel MOSFET on-resistance, low-side FET	SMPS1&2, each phase		39		mΩ
	Output voltage slew rate [3]	RANGE = 1		2.5		mV/µs

(1) SMPS1 and SMPS2 can be used in parallel in dual-phase mode to be able to multiply the output current by 2, and the converter is named SMPS1&2. The naming SMPS1 and SMPS2 is used when the bucks are configured as a separate buck converters.
(2) Additional information about how this parameter is specified is located in Section 6.2.2.
(3) This slew rate refers to the rate at which the output voltage changes from one voltage level to another voltage after startup is complete.

Copyright © 2015–2019, Texas Instruments Incorporated

Electrical Characteristics — SMPS1&2 in Dual-Phase Configuration *(continued)*

Over operating free-air temperature range, typical values are at T_A = 27°C (unless otherwise noted).(1)

PARAMETER		TEST CONDITIONS	MIN	TYP	MAX	UNIT
R_{DIS}	Pulldown discharge resistance output	SMPSx_FDBK, SMPS turned off		375		Ω
		SMPSx_SW, SMPS turned off. Pulldown is at master phase output.		9	22	
R_{SENSE}	Input resistance for remote sense (sense line)	Between SMPS1_FDBK and SMPS2_FDBK	260		2200	kΩ
I_{Qoff}	Quiescent current – Off mode	I_{LOAD} = 0 mA		0.1	2.5	µA
$I_{Qon(ON)}$	Quiescent current – On mode, dual phase	ECO mode, device not switching, –40°C ≤T_A ≤ 85°C		15	25	µA
		ECO mode, device not switching, 85°C < T_A ≤105°C		18	25.5	
		PWM mode, I_{LOAD} = 0 mA, V_{IN} = 3.8 V, V_{OUT} = 1 V, device switching, 1-phase operation		11		mA
V_{SMPSPG}	Powergood threshold SMPS1, SMPS2	SMPS output voltage rising, referenced to programmed output voltage		–4%		
		SMPS output voltage falling, referenced to programmed output voltage		–16%		
$I_{L_AVG_COMP}$	Powergood: GPADC monitoring SMPS1&2	IL_AVG_COMP_rising		6		A
		IL_AVG_COMP_falling		$I_{L_AVG_COMP_rising}$-5%		

4.7 Electrical Characteristics — SMPS1, SMPS2, SMPS3, SMPS4, and SMPS5 Stand-Alone Regulators

Over operating free-air temperature range, typical values are at T_A = 27°C (unless otherwise noted).

PARAMETER		TEST CONDITIONS	MIN	TYP	MAX	UNIT
	Input capacitance (C8, C9, C10, C11, C12)			4.7		µF
	Output capacitance (C13, C14, C15, C16, C17)(1)		33	47	57	µF
C_{ESR}	Filtering capacitor DC ESR	1 to 10 MHz		2	10	mΩ
	Output filter inductance (L1, L2, L3, L4, L5)	SMPSx_SW	0.7	1	1.3	µH
DCR_L	Filter inductor DC resistance			50	100	mΩ
V_{IN} (SMPSx)	Input voltage range, SMPSx_IN	VSYS (VCCA)	3.135		5.25	V
V_{OUT} (SMPSx)	Output voltage, programmable, SMPSx	RANGE = 0 (value for RANGE must not be changed when SMPS is active). In ECO mode the output voltage value is fixed (defined before ECO mode is enabled).	0.7		1.65	V
		RANGE = 1 (value for RANGE must not be changed when SMPS is active). In ECO mode the output voltage value is fixed (defined before ECO mode is enabled).	1.0		3.3	
		Step size, 0.7 V ≤ V_{OUT} ≤ 1.65 V		10		mV
		Step size, 1 V ≤ V_{OUT} ≤ 3.3 V		20		
	DC output voltage accuracy, includes voltage references, DC load and line regulation, process and temperature	ECO mode	–3%		4%	
		PWM mode	–1%		2%	
	Ripple	Max load, V_{IN} = 3.8 V, V_{OUT} = 1.2 V, ESR_{COUT} = 2 mΩ, measured with 20-MHz LPF		8		mV_{PP}
DC_{LNR}	DC line regulation, ΔV_{OUT} / V_{OUT}	V_{IN} = V_{INmin} to V_{INmax}		0.1		%/V
DC_{LDR}	DC load regulation, ΔV_{OUT} / V_{OUT}	I_{OUT} = 0 to I_{OUTmax}		0.1		%/A
T_{LDSR}	Transient load step response	SMPS1, SMPS2, SMPS3, SMPS5, I_{OUT} = 0.5 to 500 mA, T_R = T_F = 100 ns, C_{OUT} = 47 µF , L = 1µH		3%		
T_{LDSR}	Transient load step response	SMPS4, I_{OUT} = 0.5 to 500 mA, T_R = T_F = 1 µs, C_{OUT} = 47 µF , L = 1µH		3%		
$I_{OUTmax(SMPS1,2)}$	Rated output current, SMPS1, SMPS2	Advance thermal design is required to avoid thermal shut down			3.5	A
$I_{OUTmax(SMPS3)}$	Rated output current, SMPS3	Advance thermal design is required to avoid thermal shut down			3	A
$I_{OUTmax(SMPS4)}$	Rated output current, SMPS4	Advance thermal design is required to avoid thermal shut down			1.5	A
$I_{OUTmax(SMPS5)}$	Rated output current, SMPS5	Advance thermal design is required to avoid thermal shut down			2	A
$I_{OUTmax(ECO)}$	Maximum output current, ECO mode	Advance thermal design is required to avoid thermal shut down			5	mA
$I_{LIM\ HS\ FET}$	High-side MOSFET forward current limit	SMPS1, SMPS2, SMPS3	4.2	4.5		A
		SMPS4	2.2	2.5		
		SMPS5	2.7	3		
$I_{LIM\ LS\ FET}$	Low-side MOSFET forward current limit	SMPS1, SMPS2, SMPS3		4.2		A
		SMPS4		2.2		
		SMPS5		2.7		
$R_{DS(ON)\ HS\ FET}$	N-channel MOSFET on-resistance (high-side FET)	SMPS1, SMPS2, SMPS3, SMPS5		50		mΩ
		SMPS4		110		mΩ

(1) Additional information about how this parameter is specified is located in Section 6.2.2.

Copyright © 2015–2019, Texas Instruments Incorporated

Electrical Characteristics — SMPS1, SMPS2, SMPS3, SMPS4, and SMPS5 Stand-Alone Regulators *(continued)*

Over operating free-air temperature range, typical values are at T_A = 27°C (unless otherwise noted).

PARAMETER		TEST CONDITIONS	MIN	TYP	MAX	UNIT
$R_{DS(ON)\ LS\ FET}$	N-channel MOSFET on-resistance (low-side FET)	SMPS1, SMPS2, SMPS3, SMPS5		39		mΩ
		SMPS4		79		
	Overshoot during turn-on				5%	
	Output voltage slew rate (2)			2.5		mV/µs
R_{DIS}	Pulldown discharge resistance at SMPSx output	SMPSx_FDBK, SMPS turned off		375		Ω
		SMPSx_SW, SMPS turned off		9	22	
I_{Qoff}	Quiescent current – Off mode	I_{LOAD} = 0 mA		0.1	2.5	µA
$I_{Qon(SMPS1,2,3,5)}$	Quiescent current – On mode - SMPS1, SMPS2, SMPS3, SMPS5	ECO mode, device not switching, V_{OUT} < 1.8 V –40°C ≤T_A ≤ 85°C		15	25	µA
		ECO mode, device not switching, V_{OUT} < 1.8 V 85°C < T_A ≤ 105°C		18	25.5	
		ECO mode, device not switching, V_{OUT} ≥ 1.8 V, –40°C ≤T_A ≤ 85°C		16.5	25	
		ECO mode, device not switching, V_{OUT} ≥ 1.8 V, 85°C < T_A ≤ 105°C		19.5	25.5	
		FORCED_PWM mode, I_{LOAD} = 0 mA, V_{IN} = 3.8 V, V_{OUT} = 1 V, device switching		11		mA
$I_{Qon(SMPS4)}$	Quiescent current – On mode - SMPS4	ECO mode, device not switching, V_{OUT} < 1.8 V –40°C ≤T_A ≤ 85°C		15	24	µA
		ECO mode, device not switching, V_{OUT} < 1.8 V 85°C < T_A ≤ 105°C		18	25	
		ECO mode, device not switching, V_{OUT} ≥ 1.8 V, –40°C ≤T_A ≤ 85°C		16.5	24	
		ECO mode, device not switching, V_{OUT} ≥ 1.8 V, 85°C < T_A ≤ 105°C		19.5	25	
		FORCED_ PWM mode, I_{LOAD} = 0 mA, V_{IN} = 3.8 V, V_{OUT} = 1 V, device switching		7		mA
V_{SMPSPG}	Powergood threshold	SMPS output voltage rising, referenced to programmed output voltage		–4%		
		SMPS output voltage falling, referenced to programmed output voltage		–16%		
IL_AVG_COMP	Powergood: GPADC monitoring	IL_AVG_COMP_rising - SIMPS1, SMPS2		3		A
		IL_AVG_COMP_rising - SMPS3		3		A
		IL_AVG_COMP_rising - SMPS5		2		A
		IL_AVG_COMP_falling - SMPS1, SMPS2, SMPS3	$I_{L_AVG_COMP_rising}$-5%			A
		IL_AVG_COMP_falling- SMPS5	$I_{L_AVG_COMP_rising}$-8%			A

(2) This slew rate refers to the rate at which the output voltage changes from one voltage level to another voltage after startup is complete.

4.8 Electrical Characteristics — Reference Generator (Bandgap)

Over operating free-air temperature range, typical values are at T_A = 27°C (unless otherwise noted).

PARAMETER	TEST CONDITIONS	MIN	TYP	MAX	UNIT
Filtering capacitor	Connected from VBG to REFGND	30	100	150	nF
Output voltage			0.85		V
Ground current			20	40	µA

4.9 Electrical Characteristics — 32-kHz RC Oscillators and SYNCCLKOUT Output Buffers

Over operating free-air temperature range, typical values are at T_A = 27°C (unless otherwise noted).

PARAMETER	TEST CONDITIONS	MIN	TYP	MAX	UNIT
32-kHz RC OSCILLATOR					
Active current consumption			4	8	µA
Power down current				30	nA
SYNCCLKOUT OUTPUT BUFFER					
Logic output external load		5	35	50	pF

Copyright © 2015–2019, Texas Instruments Incorporated

4.10 Electrical Characteristics — 12-Bit Sigma-Delta ADC

Over operating free-air temperature range, typical values are at T_A = 27°C (unless otherwise noted).

PARAMETER		TEST CONDITIONS	MIN	TYP	MAX	UNIT
I_{QON}	Current consumption	During conversion		1500	1600	µA
I_{QOFF}	Off mode current	GPADC is not enabled (no conversion)			1	µA
	Gain error	Without calibration (inputs without scaler)	–3.5%		3.5%	
		Without calibration (inputs with scaler)	–4.5%		4.5%	
		With calibration, T_A = 27°C, VCCA = 5.25V	–0.95%		0.95%	
	Offset	Without calibration	–65		65	LSB
		With calibration, T_A = 27°C, VCCA = 5.25V	–17		17	
	Gain error drift (after trimming, including reference voltage)	Temperature and supply	–0.6%		0.6%	
	Offset drift after trimming	Temperature and supply	–2		2	LSB
INL	Integral nonlinearity	Best fitting	–3.5		3.5	LSB
DNL	Differential nonlinearity		–1		3.5	LSB
	Input capacitance	ADCIN1, ADCIN2		0.5		pF
	Source input impedance	Source resistance without capacitance			20	kΩ
		Source capacitance with > 20-kΩ source resistance	100			nF
	Input range (sigma-delta ADC)	Typical range	0		1.25	V
		Assured range without saturation	0.01		1.215	
SMPS CURRENT MONITORING (GPADC CHANNEL 4)(1)						
	Channel 4 SMPS output current measurement gain factor, I_{FS0}			3.958		A
	Channel 4 SMPS output current measurement current offset, I_{OS0}			0.652		A
	Channel 4 SMPS output current measurement temperature coefficient, TC_R0			–1090		ppm/°C
	SMPS output current measurement accuracy, Ierr (%), GPADC trimmed	I_{LOAD_error} (%) = I_{LOAD_meas} / I_{LOAD} × 100. I_{LOAD} = 3 A for SMPS1/SMPS2/SMPS3. 25°C	–8%		8%	
	SMPS output current measurement accuracy, Ierr (%), GPADC trimmed	I_{LOAD_error} (%) = I_{LOAD_meas} / I_{LOAD} × 100. I_{LOAD} = 2 A for SMPS5. 25°C	–10%		10%	

(1) **Basic equation for result:** $I_{LOAD} = I_{FS} \times GPADC\ code / (2^{12} - 1) - I_{OS}$, where K is the number of SMPS active phases, $I_{FS} = I_{FS0} \times K$ and $I_{OS} = I_{OS0} \times K$
Temperature compensated result: $I_{LOAD} = I_{FS} \times GPADC\ code / ((2^{12} - 1) \times (1 + TC_R0 \times (TEMP-25))) - I_{OS}$

4.11 Electrical Characteristics — Thermal Monitoring and Shutdown

Over operating free-air temperature range, typical values are at T_A = 27°C (unless otherwise noted).

PARAMETER		TEST CONDITIONS		MIN	TYP	MAX	UNIT
	Hot-die temperature threshold	HDSEL[1:0] = 00	Rising threshold	104	117	127	°C
			Falling threshold	95	108	119	
		HDSEL[1:0] = 01	Rising threshold	109	121	132	
			Falling threshold	99	112	123	
		HDSEL[1:0] = 10	Rising threshold	113	125	136	
			Falling threshold	104	116	128	
		HDSEL[1:0] = 11	Rising threshold	117	130	143	
			Falling threshold	108	120	132	
	Thermal shutdown threshold	Rising threshold		133	148	163	°C
		Falling threshold		111	123	135	
I_{QOFF}	Off ground current (two sensors on the die, specification for one sensor)	Device in OFF state, VCCA = 3.8 V, T = 25°C				0.1	µA
		Device in OFF state				0.5	
I_{QON}	On ground current (two sensors on the die, specification for one sensor)	Device in ACTIVE state, VCCA = 3.8 V, T = 25°C			7	15	µA
		Device in ACTIVE state, GPADC measurement			25	40	

Copyright © 2015–2019, Texas Instruments Incorporated

4.12 Electrical Characteristics — System Control Thresholds

Over operating free-air temperature range, typical values are at T_A = 27°C (unless otherwise noted).

PARAMETER	TEST CONDITIONS	MIN	TYP	MAX	UNIT
POR (power-on reset) rising-edge threshold	Measured on VCCA pin	2.0	2.15	2.5	V
POR falling-edge threshold	Measured on VCCA pin	1.7	2	2.46	V
POR hysteresis	Rising edge to falling edge	40		300	mV
VSYS_LO, falling threshold, measured on VCCA pin	Voltage range, 50-mV steps	2.75		3.1	V
	Voltage accuracy	–50		95	mV
VSYS_LO hysteresis	Falling edge to rising edge	75		460	mV
VSYS_HI, measured on VCC_SENSE pin	Voltage range, 50-mV steps	2.9		3.85	V
	Voltage accuracy	–70		140	mV
VSYS_MON, measured on VCC_SENSE pin	Voltage range, 50-mV steps	2.75		4.6	V
	Voltage accuracy	–70		140	mV
VBUS detection (VBUS wake-up comparator threshold [plug detect])	Rising threshold	2.9		3.6	V
	Falling threshold	2.8		3.3	V

4.13 Electrical Characteristics — Current Consumption

Over operating free-air temperature range, typical values are at T_A = 27°C (unless otherwise noted).

PARAMETER		TEST CONDITIONS	MIN	TYP	MAX	UNIT
OFF MODE						
I_{OFF}	Device Off Mode Current Consumption	VCCA = 3.8 V, Device in OFF mode.		20	55	µA
SLEEP MODE						
I_{SLEEP}	Device Sleep Mode Current Consumption	VCCA = 3.8 V, PLL disabled, Device in Sleep mode. SMPS4 and SMPS5 enabled in ECO mode, no load, all other external supply rails are disabled		90	150	µA

4.14 Electrical Characteristics — Digital Input Signal Parameters

Over operating free-air temperature range, typical values are at T_A = 27°C (unless otherwise noted). (VIO to refers to VIO_IN pin, VSYS to refers to VCCA pin)

PARAMETER		TEST CONDITIONS	MIN	TYP	MAX	UNIT
PWRON						
$V_{IL(VSYS)}$	Low-level input voltage related to VSYS (VCCA pin reference)		–0.3	0	0.35 × VSYS	V
$V_{IH(VSYS)}$	High-level input voltage related to VSYS (VCCA pin reference)		0.65 × VSYS	VSYS	VSYS + 0.3 ≤ 5.25	V
	Hysteresis related to VSYS		0.025 × VSYS			V
GPIO_2, GPIO_4, ENABLE1, I2C2_SCL_SCE, I2C2_SDA_SDO, I2C1_SCL_SCK, I2C1_SDA_SDI						
$V_{IL(VIO)}$	Low-level input voltage related to VIO (VIO_IN pin reference)		–0.3	0	0.3 × VIO	V
$V_{IH(VIO)}$	High-level input voltage related to VIO (VIO_IN pin reference)		0.7 × VIO	VIO	VIO + 0.3	V
	Hysteresis related to VIO		0.045 × VIO			V
BOOT, SYNCDCDC, ENABLE2, GPIO_0, GPIO_1, GPIO_3, GPIO_5, GPIO_6, NRESWARM, POWERHOLD, PWRDOWN, RESET_IN, NSLEEP						
$V_{IL(VRTC)}$	Low-level input voltage related to VRTC		–0.3	0	0.3 × VRTC	V
$V_{IH(VRTC)}$	High-level input voltage related to VRTC		0.7 × VRTC	VRTC	VRTC + 0.3	V
	Hysteresis related to VRTC		0.05 × VRTC			V

Copyright © 2015–2019, Texas Instruments Incorporated

4.15 Electrical Characteristics — Digital Output Signal Parameters

T_A = –40°C to +85°C, typical values are at T_A = 27°C (unless otherwise noted). (VIO to refers to VIO_IN pin, VSYS to refers to VCCA pin)

PARAMETER		TEST CONDITIONS	MIN	TYP	MAX	UNIT
GPIO_2, GPIO_4, REGEN2, INT, RESET_OUT						
	Low-level output voltage, push-pull and open-drain	I_{OL} = 2 mA			0.45	V
		I_{OL} = 100 µA			0.2	
	High-level output voltage, push-pull (VIO_IN pin reference)	I_{OH} = 2 mA	VIO – 0.45		VIO	V
		I_{OH} = 100 µA	VIO – 0.2		VIO	
	Supply for external pullup resistor, open drain				VIO	V
SYNCCLKOUT						
$V_{OL(SYNCCLKOUT)}$	Low-level output voltage, push-pull	I_{OL} = 1 mA			0.45	V
		I_{OL} = 100 µA			0.2	
$V_{OH(SYNCCLKOUT)}$	High-level output voltage , push-pull	I_{OH} = 1 mA	VRTC – 0.45		VRTC	V
		I_{OH} = 100 µA	VRTC – 0.2		VRTC	
GPIO_0, GPIO_1, GPIO_3, GPIO_5, REGEN1						
	Low-level output voltage, open-drain	External pullup to VRTC, I_{OL} = 2 mA			0.45	V
		External pullup to VRTC, I_{OL} = 100 µA			0.2	
	Supply for external pullup resistor, open-drain				5.25	V
GPIO_6, POWERGOOD, REGEN3						
	Low-level output voltage, open-drain	External pullup to VRTC, I_{OL} = 2 mA			0.45	V
		External pullup to VRTC, I_{OL} = 100 µA			0.2	
	Supply for external pullup resistor, open-drain				VRTC	V
I2C1_SDA_SDI, I2C2_SDA_SDO						
$V_{OL(VIO)}$	Low-level output voltage related to VIO (VIO_IN pin reference)	3-mA sink current		0.1 × VIO	0.2 × VIO	V
C_B	Capacitive load for I2C2_SDA _SDO	SPI Interface mode is selected			20	pF

4.16 I/O Pullup and Pulldown Characteristics

Over operating free-air temperature range (unless otherwise noted). (VIO to refers to VIO_IN pin, VSYS to refers to VCCA pin)

PARAMETER	TEST CONDITIONS		MIN	TYP	MAX	UNIT
PWRON signal, fixed pullup	VSYS pullup supply	PULL UP	55	120	370	kΩ
GPIO_0, GPIO_1, GPIO3, and GPIO5 signals	VRTC pullup supply	PULL DOWN	180	400	900	kΩ
GPIO_2 and GPIO_4 signals	VIO pullup supply	PULL UP	170	400	1200	kΩ
		PULL DOWN	170	400	950	
GPIO_6 signal	VRTC pullup supply	PULL UP	170	400	1200	kΩ
		PULL DOWN	180	400	900	

4.17 Electrical Characteristics — I^2C Interface

over operating free-air temperature range (unless otherwise noted)

PARAMETER		TEST CONDITIONS	MIN	TYP	MAX	UNIT
C_B	Capacitive load for SDA and SCL				400	pF

Copyright © 2015–2019, Texas Instruments Incorporated

4.18 Timing Requirements — I²C Interface

Over operating free-air temperature range, typical values are at T_A = 27°C (unless otherwise noted). (1)(2)(3)(4)

			MIN	MAX	UNIT
$f_{(SCL)}$	SCL clock frequency	Standard mode		100	kHz
		Fast mode		400	kHz
		High-speed mode (write operation), C_B – 100 pF max		3.4	MHz
		High-speed mode (read operation), C_B – 100 pF max		3.4	MHz
		High-speed mode (write operation), C_B – 400 pF max		1.7	MHz
		High-speed mode (read operation), C_B – 400 pF max		1.7	MHz
t_{BUF}	Bus free time between a stop (P) and start (S) condition	Standard mode	4.7		µs
		Fast mode	1.3		µs
$t_{HD(STA)}$	Hold time (Repeated) start condition	Standard mode	4		µs
		Fast mode	600		ns
		High-speed mode	160		ns
t_{LOW}	Low period of the SCL clock	Standard mode	4.7		µs
		Fast mode	1.3		µs
		High-speed mode, C_B – 100 pF max	160		ns
		High-speed mode, C_B – 400 pF max	320		ns
t_{HIGH}	High period of the SCL clock	Standard mode	4		µs
		Fast mode	600		ns
		High-speed mode, C_B – 100 pF max	60		ns
		High-speed mode, C_B – 400 pF max	120		ns
$t_{SU(STA)}$	Setup time for a repeated start (Sr) condition	Standard mode	4.7		µs
		Fast mode	600		ns
		High-speed mode	160		ns
$t_{SU(DAT)}$	Data setup time	Standard mode	250		ns
		Fast mode	100		ns
		High-speed mode	10		ns
$t_{HD(DAT)}$	Data hold time	Standard mode	0	3.45	µs
		Fast mode	0	0.9	µs
		High-speed mode, C_B – 100 pF max	0	70	ns
		High-speed mode, C_B – 400 pF max	0	150	ns
t_{RCL}	Rise time of the SCL signal	Standard mode	20 + 0.1 C_B	1000	ns
		Fast mode	20 + 0.1 C_B	300	ns
		High-speed mode, C_B – 100 pF max	10	40	ns
		High-speed mode, C_B – 400 pF max	20	80	ns
t_{RCL1}	Rise time of the SCL signal after a Repeated Start condition and after an acknowledge bit	Standard mode	20 + 0.1 C_B	1000	ns
		Fast mode	20 + 0.1 C_B	300	ns
		High-speed mode, C_B – 100 pF max	10	80	ns
		High-speed mode, C_B – 400 pF max	20	160	ns

(1) Specified by design. Not tested in production.
(2) All values referred to V_{IHmin} and V_{IHmax} levels.
(3) For bus line loads C_B between 100 and 400 pF, the timing parameters must be linearly interpolated.
(4) A device must internally provide a data hold time to bridge the undefined part between V_{IH} and V_{IL} of the falling edge of the SCLH signal. An input circuit with a threshold as low as possible for the falling edge of the SCLH signal minimizes this hold time.

Copyright © 2015–2019, Texas Instruments Incorporated

Timing Requirements — I²C Interface *(continued)*

Over operating free-air temperature range, typical values are at T_A = 27°C (unless otherwise noted). (1)(2)(3)(4)

			MIN	MAX	UNIT
t_{FCL}	Fall time of the SCL signal	Standard mode	20 + 0.1 C_B	300	ns
		Fast mode	20 + 0.1 C_B	300	ns
		High-speed mode, C_B – 100 pF max	10	40	ns
		High-speed mode, C_B – 400 pF max	20	80	ns
t_{RDA}	Rise time of the SDA signal	Standard mode	20 + 0.1 C_B	1000	ns
		Fast mode	20 + 0.1 C_B	300	ns
		High-speed mode, C_B – 100 pF max	10	80	ns
		High-speed mode, C_B – 400 pF max	20	160	ns
t_{FDA}	Fall time of the SDA signal	Standard mode	20 + 0.1 C_B	300	ns
		Fast mode	20 + 0.1 C_B	300	ns
		High-speed mode, C_B – 100 pF max	10	80	ns
		High-speed mode, C_B – 400 pF max	20	160	ns
$t_{SU(STO)}$	Setup time for a stop condition	Standard mode	4		µs
		Fast mode	600		ns
		High-speed mode	160		ns

4.19 Timing Requirements — SPI

See Figure 4-3 for the SPI timing diagram.

		MIN	MAX	UNIT
t_{cesu}	Chip-select set up time	30		ns
t_{cehld}	Chip-select hold time	30		ns
t_{ckper}	Clock cycle time	67	100	ns
t_{ckhigh}	Clock high typical pulse duration	20		ns
t_{cklow}	Clock low typical pulse duration	20		ns
t_{sisu}	Input data set up time, before clock active edge	5		ns
t_{sihld}	Input data hold time, after clock active edge	5		ns
t_{dr}			15	ns
t_{CE}	Time from CE going low to CE going high	67		ns
	Capacitive load on pin SDO		30	pF

4.20 Switching Characteristics — LDO Regulators

Over operating free-air temperature range, typical values are at T_A = 27°C (unless otherwise noted).

PARAMETER		TEST CONDITIONS	MIN	TYP	MAX	UNIT
T_{on}	Turn-on time	I_{OUT} = 0, V_{OUT} = 0.1 V up to V_{OUTmin}		100	500	µs
T_{off}	Turn-off time (except VRTC)	I_{OUT} = 0, V_{OUT} down to 10% × V_{OUT}		250	500	µs

4.21 Switching Characteristics — SMPS1&2 in Dual-Phase Configuration

Over operating free-air temperature range, typical values are at T_A = 27°C (unless otherwise noted).

PARAMETER		TEST CONDITIONS	MIN	TYP	MAX	UNIT
f_{SW}	Switching frequency	PWM mode	1.7	2.2	2.7	MHz
T_{start}	Time from enable to the start of the ramp			240		µs
T_{ramp}	Time from enable to 80% of V_{OUT}	C_{OUT} < 57 µF per phase, no load		400	1000	µs

Copyright © 2015–2019, Texas Instruments Incorporated

4.22 Switching Characteristics — SMPS1, SMPS2, SMPS3, SMPS4, and SMPS5 Stand-Alone Regulators

Over operating free-air temperature range, typical values are at T_A = 27°C (unless otherwise noted).

PARAMETER		TEST CONDITIONS	MIN	TYP	MAX	UNIT
f_{SW}	Switching frequency	In PWM mode	1.7	2.2	2.7	MHz
T_{start}	Time from enable to the start of the ramp			150		µs
T_{ramp}	Time from enable to 80% of V_{OUT}	C_{OUT} < 57 µF per phase, no load		400	1000	µs

4.23 Switching Characteristics — Reference Generator (Bandgap)

Over operating free-air temperature range, typical values are at T_A = 27°C (unless otherwise noted).

PARAMETER	TEST CONDITIONS	MIN	TYP	MAX	UNIT
Start-up time			1	3	ms

4.24 Switching Characteristics — PLL for SMPS Clock Generation

Over operating free-air temperature range, typical values are at T_A = 27°C (unless otherwise noted).

PARAMETER		TEST CONDITIONS	MIN	TYP	MAX	UNIT
f_{SYNC}	Synchronization range of SYNCDCDC clock		1.7	2.2	2.7	MHz
A_{DITHER}	Dither amplitude of SYNCDCDC clock				128	kHz
M_{DITHER}	Dither slope of SYNCDCDC clock				1.35	kHz/µs
$f_{FALLBACK}$	Fallback frequency	VCCA = 5.25 V	1.98	2.2	2.42	MHz
		VCCA = 3.8 V	1.9	2.2	2.42	
		VCCA = 3.135 V	1.9	2.2	2.42	
$f_{SAT,LO}$	The low saturation frequency of the PLL		1.35		1.68	MHz
$f_{SAT,HI}$	The high saturation frequency of the PLL		2.8		3.8	MHz
t_{SETTLE}	Settling time	Time from initial application or removal of sync clock until PLL output has settled to 1% of the final value			100	µs
f_{ERROR}	Frequency error	The steady-state percent of difference between f_{SYNC} and the switching frequency	–1%		1%	

4.25 Switching Characteristics — 32-kHz RC Oscillators and SYNCCLKOUT Output Buffers

Over operating free-air temperature range, typical values are at T_A = 27°C (unless otherwise noted).

PARAMETER	TEST CONDITIONS	MIN	TYP	MAX	UNIT
32-kHz RC OSCILLATOR					
Output frequency low-level output voltage			32768		Hz
Output frequency accuracy	After trimming at 27°C	–10%	0%	10%	
Cycle jitter (RMS)				10%	
Output duty cycle		40%	50%	60%	
Settling time				150	µs
SYNCCLKOUT OUTPUT BUFFER					
Rise and fall time	C_L = 35 pF, 10% to 90%	5	20	100	ns
Duty cycle	Logic output signal	40%	50%	60%	

Copyright © 2015–2019, Texas Instruments Incorporated

4.26 Switching Characteristics — 12-Bit Sigma-Delta ADC

Over operating free-air temperature range, typical values are at T_A = 27°C (unless otherwise noted).

PARAMETER	TEST CONDITIONS	MIN	TYP	MAX	UNIT
Turn-on time	Active or sleep with VANA ON and RC15MHZ_ON_IN_SLEEP = 1 or sleep with GPADC_FORCE = 1		0		µs
	Sleep or OFF		794		
	Sleep with VANA enabled		282		
Conversion time	1 channel, EXTEND_DELAY = 0		113		µs
	1 channel, EXTEND_DELAY = 1		563		
	2 channels		223		

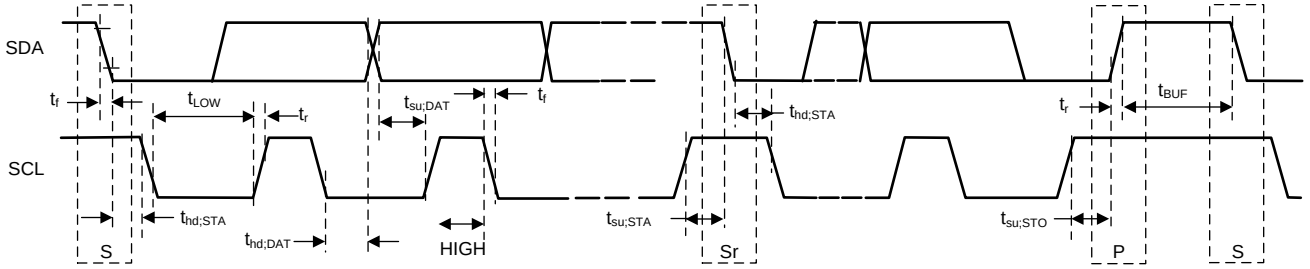

Note: S = Start; Sr = Repeated start; P = Stop

Figure 4-1. Serial Interface Timing Diagram For F/S Mode

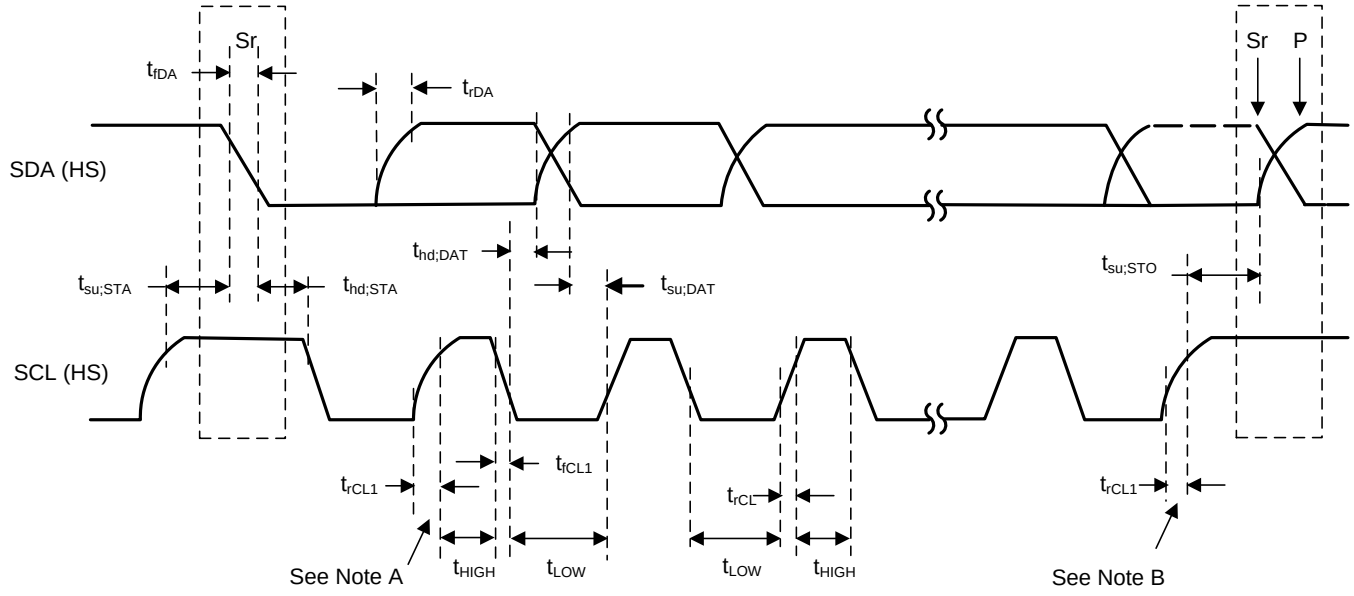

= MCS Current Source Pullup

= $R_{(P)}$ Resistor Pullup

A. First rising edge of the SCL (HS) signal after Sr and after each acknowledge bit.
B. Sr = Repeated start; P = Stop

Figure 4-2. Serial Interface Timing Diagram For HS Mode

Copyright © 2015–2019, Texas Instruments Incorporated

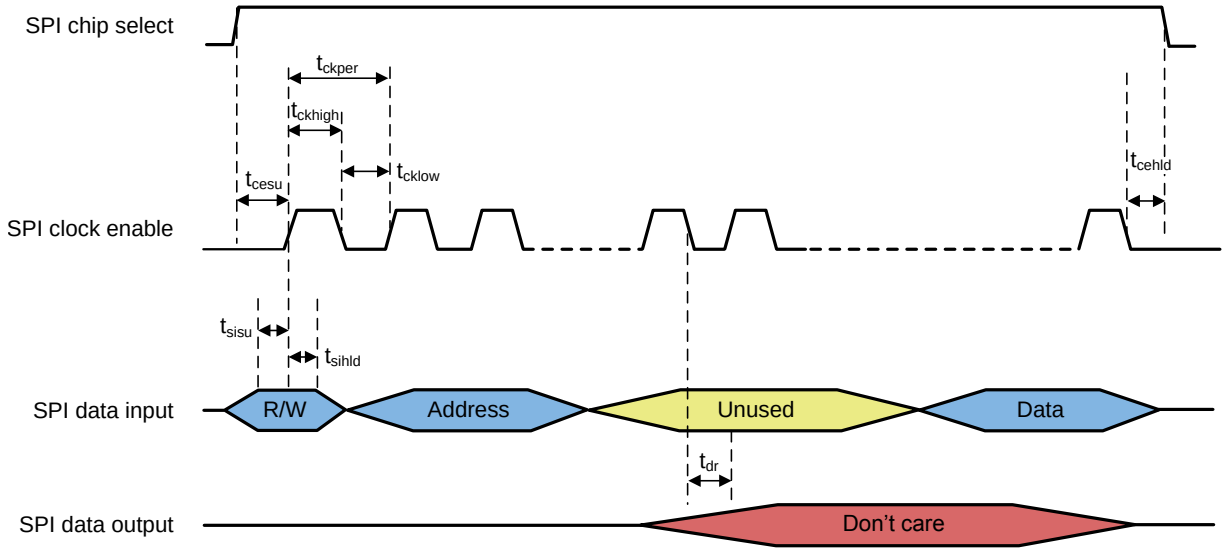

Figure 4-3. SPI Timings
See Section 4.19 for the Timing Parameters

4.27 Typical Characteristics

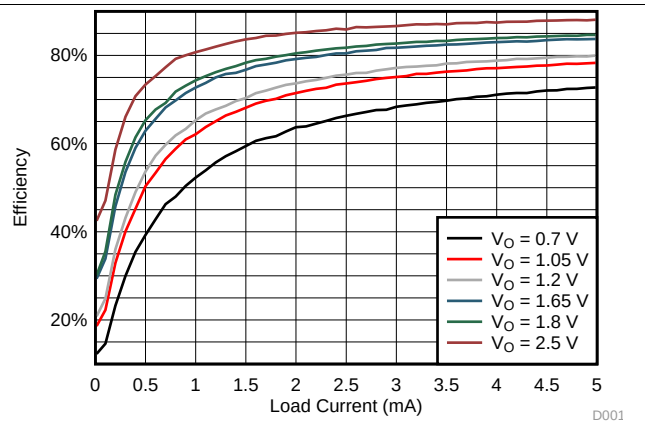

V_I = 3.8 V f_S = 2.2 MHz T_A = 25°C

Figure 4-4. SMPS Efficiency for all SMPS in Eco-mode

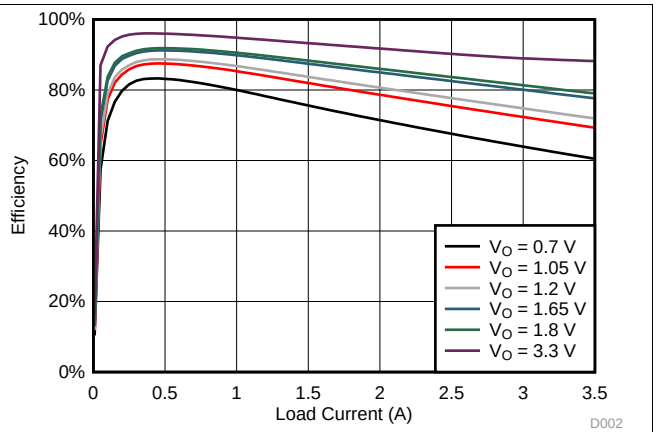

V_I = 3.8 V f_S = 2.2 MHz T_A = 25°C

Figure 4-5. SMPS Efficiency for SMPS1 and SMPS2 in Single-Phase PWM Mode

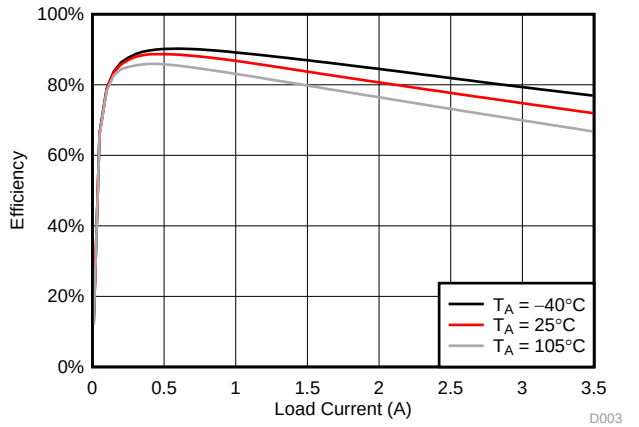

V_I = 3.8 V f_S = 2.2 MHz V_O = 1.8 V

Figure 4-6. SMPS Efficiency for SMPS1 and SMPS2 in Single-Phase PWM Mode With Temperature Variation

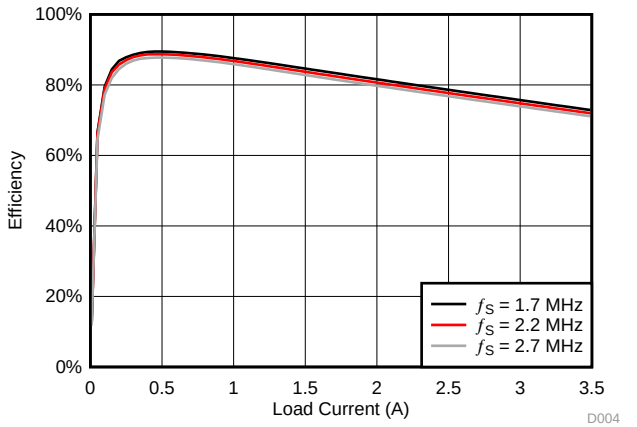

V_I = 3.8 V V_O = 1.8 V T_A = 25°C

Figure 4-7. SMPS Efficiency for SMPS1 and SMPS2 in Single-Phase PWM Mode With Frequency Variation

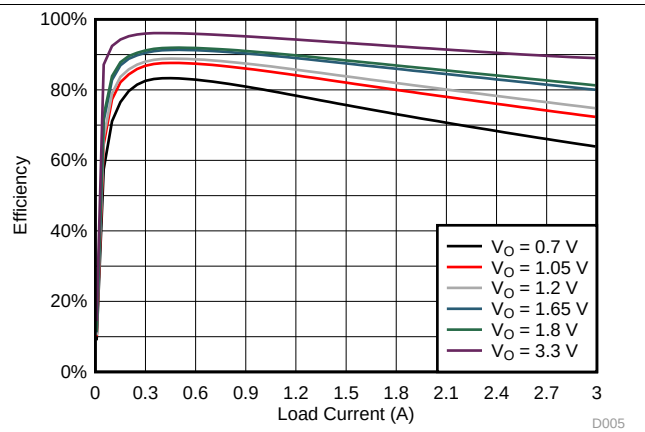

V_I = 3.8 V f_S = 2.2 MHz T_A = 25°C

Figure 4-8. SMPS Efficiency for SMPS3 in PWM Mode

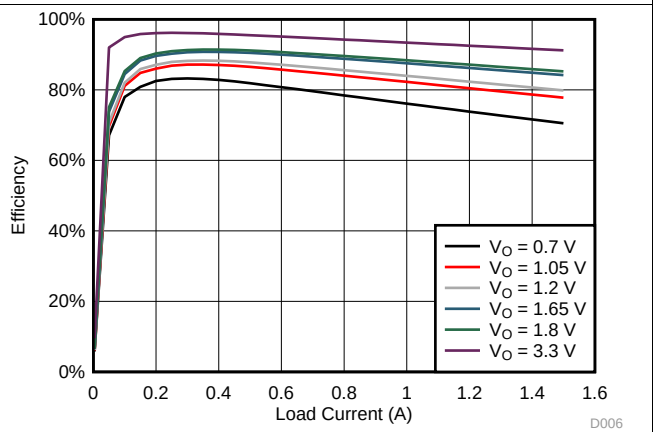

V_I = 3.8 V f_S = 2.2 MHz T_A = 25°C

Figure 4-9. SMPS Efficiency for SMPS4 in PWM Mode

Copyright © 2015–2019, Texas Instruments Incorporated

Typical Characteristics *(continued)*

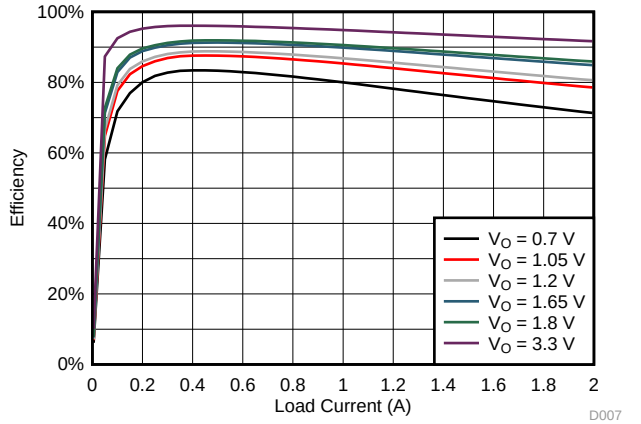

V_I = 3.8 V f_S = 2.2 MHz T_A = 25°C

Figure 4-10. SMPS Efficiency for SMPS5 in PWM Mode

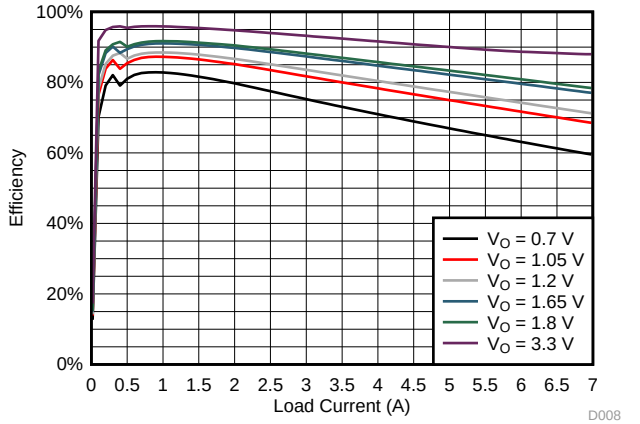

V_I = 3.8 V f_S = 2.2 MHz T_A = 25°C

Figure 4-11. SMPS Efficiency for SMPS12 in Dual-Phase PWM Mode

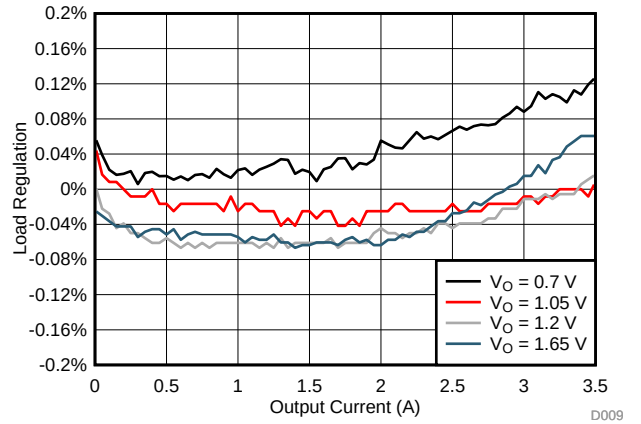

V_I = 3.8 V f_S = 2.2 MHz T_A = 25°C

Figure 4-12. SMPS Load Regulation for SMPS1 and SMPS2 Single-Phase PWM Mode

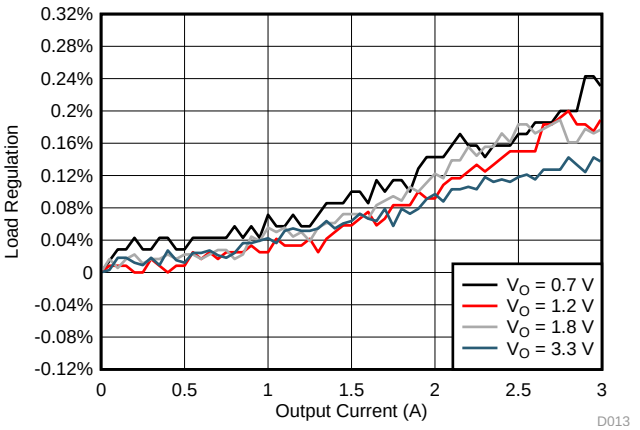

V_I = 3.8 V f_S = 2.2 MHz T_A = 25°C

Figure 4-13. SMPS Load Regulation for SMPS3, PWM Mode

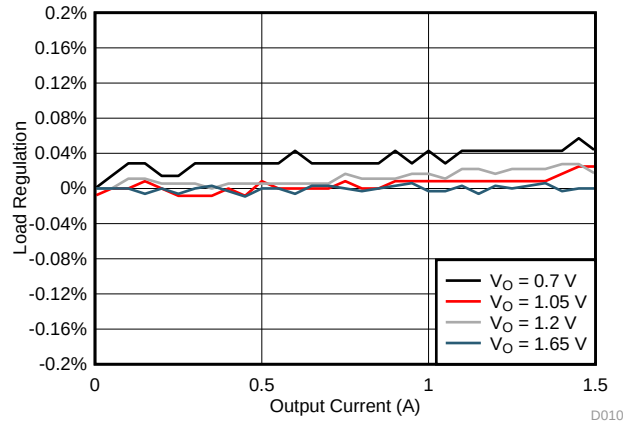

V_I = 3.8 V f_S = 2.2 MHz T_A = 25°C

Figure 4-14. SMPS Load Regulation for SMPS4 in PWM Mode

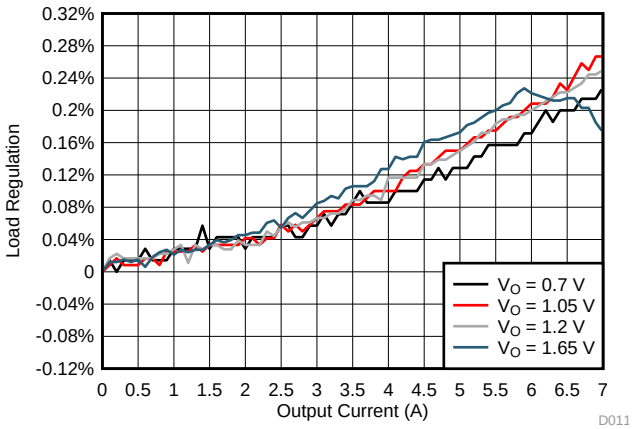

V_I = 3.8 V f_S = 2.2 MHz T_A = 25°C

Figure 4-15. SMPS Load Regulation for SMPS12 in Dual-Phase PWM Mode

Typical Characteristics *(continued)*

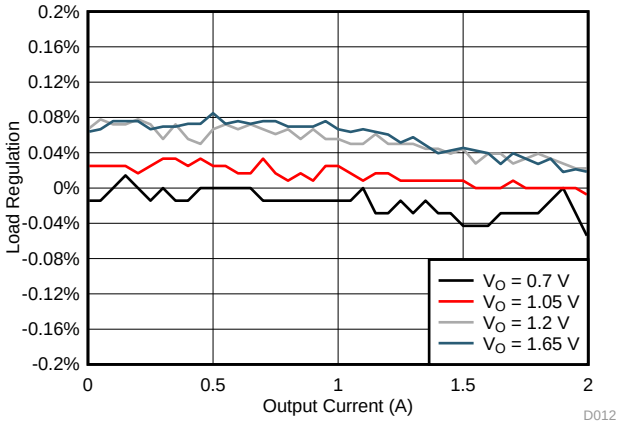

V_I = 3.8 V f_S = 2.2 MHz T_A = 25°C

Figure 4-16. SMPS Load Regulation for SMPS5 in PWM Mode

Copyright © 2015–2019, Texas Instruments Incorporated

5 Detailed Description

5.1 Overview

The TPS65917-Q1 device is an integrated power-management integrated circuit (PMIC), available in a 48-pin, 0.5-mm pitch, 7-mm × 7-mm QFN package. It is designed specifically for automotive applications. It provides five configurable step-down converter rails, with two of the rails having the ability to combine power rails and supply up to 7A of output current in multi-phase mode. The TPS65917-Q1 device also provides five external LDO rails. It also comes with a 12-bit GPADC with two external channels, seven configurable GPIOs, two I^2C interface channels or one SPI interface channel, PLL for external clock sync and phase delay capability, and programmable power sequencer and control for supporting different processors and applications.

The five step-down converter rails are consisting of five high frequency switch mode converters with integrated FETs. They are capable of synchronizing to an external clock input and supports switching frequency between 1.7 MHz and 2.7 MHz. The SMPS1 and SMPS2 can combine in dual phase configuration to supply up to 7 A. In addition, SMPS1, SMPS2, and SMPS3 support dynamic voltage scaling by a dedicated I^2C interface for optimum power savings.

The five LDOs support 0.9 V to 3.3 V output with 50-mV step. The LDOs can be supplied from either a system supply or a pre-regulated supply. All LDOs and step-down converters can be controlled by the SPI or I^2C interface, or by power request signals. In addition, voltage scaling registers allow transitioning the SMPS to different voltages by SPI, I^2C, or roof and floor control.

The power-up and power-down controller is configurable and programmable through OTP. The TPS65917-Q1 device includes a 32-kHz RC oscillator to sequence all resources during power up and power down. An internal LDOVRTC generates the supply for the entire digital circuitry of the device as soon as the VSYS supply is available through the VCCA input.

Configurable GPIOs with multiplexed feature are available on the TPS65917-Q1 device. The GPIOs can be configured and used as enable signals for external resources, which can be included into the power-up and power-down sequence. The general-purpose (GP) sigma-delta analog-to-digital converter (ADC) with two external input channels included in this device can be used as thermal or voltage and current monitors.

Copyright © 2015–2019, Texas Instruments Incorporated

5.2 Functional Block Diagram

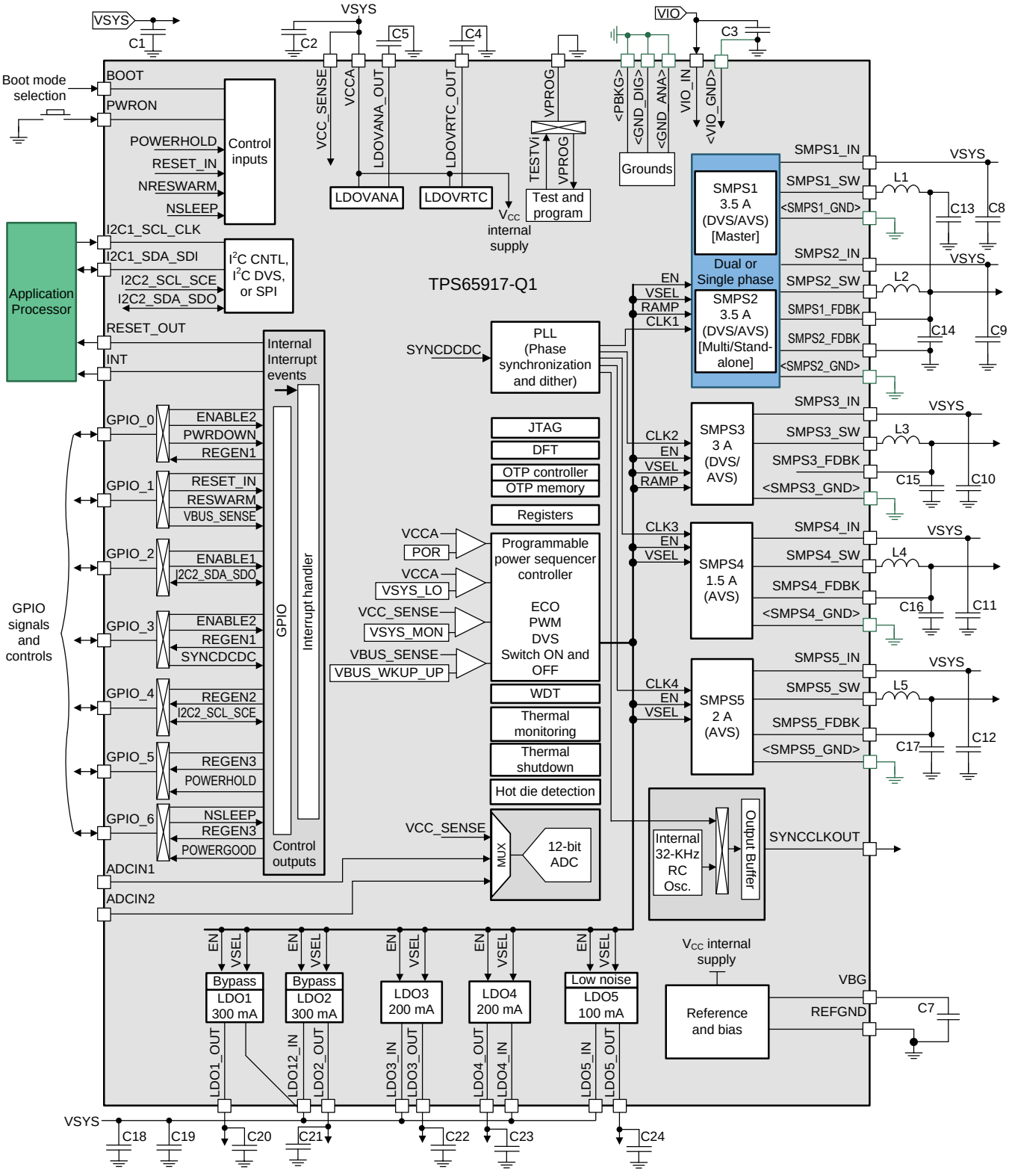

Copyright © 2017, Texas Instruments Incorporated

5.3 Device State Machine

The TPS65917-Q1 device integrates an embedded power controller (EPC) that fully manages the state of the device during power transitions. According to the four defined types of requests (ON, OFF, WAKE, and SLEEP), the EPC executes one of the five predefined power sequences (OFF2ACT, ACT2OFF, SLP2OFF, ACT2SLP, and SLP2ACT) to control the state of the device resources. Any resource can be included in any power sequence. When a resource is not controlled or configured through a power sequence, the resource is left in the default state as pre-programmed by the OTP.

Each resource is only configured through register bits. Therefore, the user can statically control the resource through the control interfaces (I^2C or SPI), or the EPC can automatically control the resource during power transitions which are predefined sequences of registers accesses.

The EPC is powered by an internal LDO which is automatically enabled when VSYS is available to the device. Ensuring that the VSYS pin (which is connected to VCCA, VCC_SENSE, SMPSx_In and LDOx_IN as suggested in the device block diagram) is the first supply available to the device is important to ensure proper operation of all the power resources provided by the device. Ensuring that the VSYS pin is stable prior to the VIO supply becoming available is important to ensure proper operation of the control interface and device IOs.

5.3.1 Embedded Power Controller

The EPC is composed of the following three main modules:

- An event arbitration module that is used to prioritize ON, OFF, WAKE, and SLEEP requests.
- A power state-machine that is used to determine which power sequence to execute based on the system state (supplies, temperature, and so forth) and requested transition (from the event arbitration module).
- A power sequencer that fetches the selected power sequence from OTP and executes the sequence. The power sequencer sets up and controls all resources accordingly, based on the definition of each sequence.

Figure 5-1 shows the EPC block diagram.

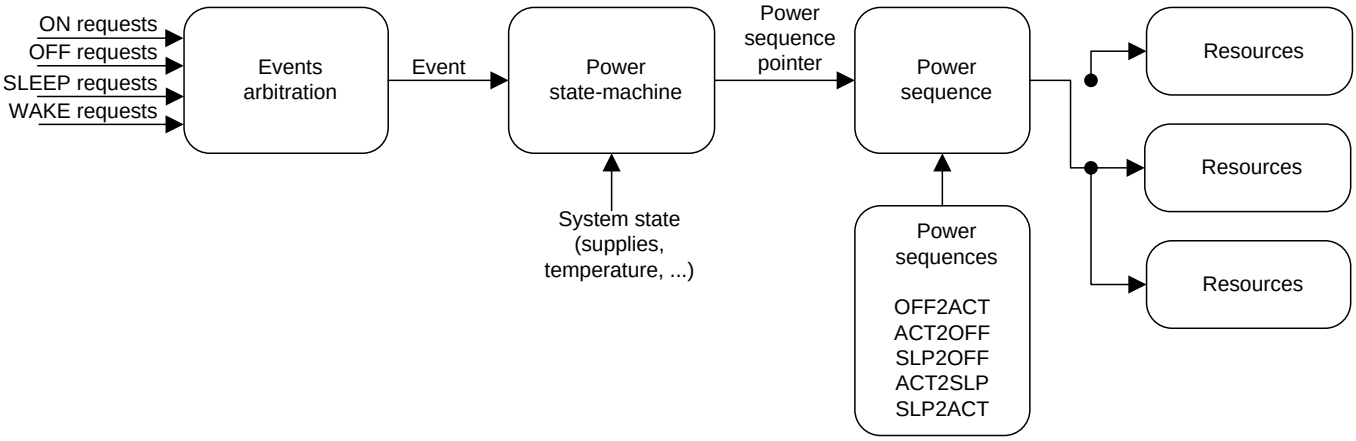

Figure 5-1. EPC Block Diagram

The power state-machine is defined through the following states:

NO SUPPLY The device is not powered by a valid energy source on the system power rail (VCCA < POR).

BACKUP The device is powered by a valid supply on the system power rail which is above power-on reset (POR) threshold but below the system low threshold (POR < VCCA < VSYS_LO).

OFF The device is powered by a valid supply on the system power rail (VCCA > VSYS_LO) and is waiting for a start-up event or condition. All device resources, except VRTC, are in the

Copyright © 2015–2019, Texas Instruments Incorporated

OFF state.

ACTIVE The device is powered by a valid supply on the system power rail (VCC_SENSE > VSYS_HI) and has received a start-up event. The device has switched to the ACTIVE state and has full capacity to supply the processor and other platform modules.

SLEEP The device is powered by a valid supply on the system power rail (VCCA > VSYS_LO) and is in low-power mode. All configured resources are set to the low-power mode, which can be ON, SLEEP, or OFF depending on the specific resource setting. If a given resource is maintained active (ON) during low-power mode, then all linked subsystems are automatically maintained active.

Figure 5-2 shows the state diagram for the power control state-machine.

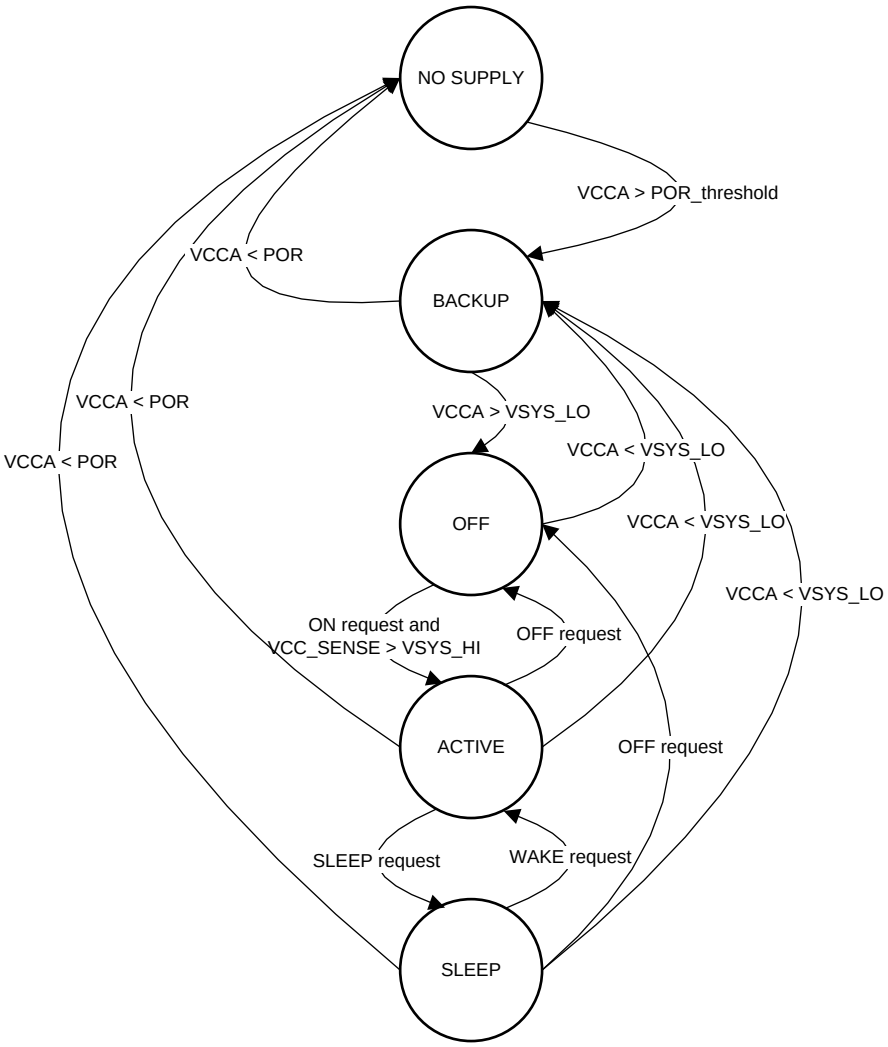

Figure 5-2. State Diagram for the Power Control State-Machine

Power sequences define how a resource state switches between the OFF, ACTIVE, and SLEEP states, but these sequences have no effect during the NO SUPPLY or BACKUP states. When the device is brought into the OFF state from a NO SUPPLY or BACKUP state, internal hardware manages the state transition automatically before the EPC takes control of the device power sequencing as the device arrives the OFF state.

The allowed power transitions include the following:

- OFF to ACTIVE (OFF2ACT)
- ACTIVE to OFF (ACT2OFF)

Copyright © 2015–2019, Texas Instruments Incorporated

- ACTIVE to SLEEP (ACT2SLP)
- SLEEP to ACTIVE (SLP2ACT)
- SLEEP to OFF (SLP2OFF)

Each power transition consists of a sequence of one or several register accesses that controls the resources according to the EPC supervision. Because these sequences are stored in nonvolatile memory (OTP), these sequences cannot be altered.

As an additional safety feature, an error detection routine of the OTP bit integrity is available with this device. If enabled, this routine is executed to compare the current OTP values with the preprogrammed values at the beginning of every OFF2ACT power sequence. When an OTP bit integrity error is detected, the OTP register, CRC_CONTROL, can be preprogramed to select the following options:

- *Skip Error Detection* and execute all power sequence
- *Execute Error Detection* and execute all power-up sequence, even if an error is detected
- *Execute Error Detection*. If an error is detected, execute power-up sequence until the VIO supply rail is up
- *Execute Error Detection*. If an error is detected, stop power-up sequence altogether

When an error is detected, an interrupt (INT2.OTP_ERROR) is sent to the host processor regardless of the CRC_CONTROL setting.

5.3.2 State Transition Requests

5.3.2.1 ON Requests

ON requests are used to switch on the device, which transitions the device from the OFF to the ACTIVE state. Table 5-1 lists the ON requests.

Table 5-1. ON Requests

EVENT	MASKABLE	POLARITY	COMMENT	DEBOUNCE
PWRON (pin)	No	Low	Level sensitive	N/A
Part of interrupts (event)	Yes (INTx_MASK register. Default: Masked)	Event	Edge sensitive	N/A
POWERHOLD (pin)	No	High	Level sensitive	3 - 5 ms typical

If one of the events listed in Table 5-1 occurs, the event powers on the device unless one of the gating conditions listed in Table 5-2 is present. Table 5-12 lists interrupt sources that can be configured as ON requests.

Table 5-2. ON Requests Gating Conditions

EVENT	MASKABLE	POLARITY	COMMENT
VSYS_HI (event)	No	Low	VCC_SENSE < VSYS_HI
HOTDIE (event)	No	High	Device temperature exceeds the HOTDIE level
PWRDOWN (pin)	No	OTP configurable	—
RESET_IN (pin)	No	OTP configurable	—

5.3.2.2 OFF Requests

OFF requests are used to switch off the device, meaning a transition from SLEEP or ACTIVE to OFF state. Table 5-3 lists the OFF requests. OFF requests have the highest priority, which means these requests have no gating conditions. Any OFF request is executed even though a valid SLEEP or ON request is present. The device goes to the OFF state and then, when the OFF request is cleared, the device reacts to an ON request, if one occurs.

Copyright © 2015–2019, Texas Instruments Incorporated

Table 5-3. OFF Requests

EVENT	MASKABLE	POLARITY	DEBOUNCE	SWITCH OFF DELAY(1)	RESET LEVEL(2)	RESET SEQUENCE(3)
PWRON (pin) (long press key)	No	Low	LPK_TIME (OTP)	SWOFF_DLY	OTP configurable	OTP configurable
PWRDOWN (pin)	No	OTP configurable		SWOFF_DLY	OTP configurable	OTP configurable
WATCHDOG TIMEOUT(4) (internal event)	N/A	N/A	N/A	SWOFF_DLY	OTP configurable	OTP configurable
THERMAL SHUTDOWN (internal event)	No	N/A	N/A	0	OTP configurable	OTP configurable
RESET_IN (pin)	No	OTP configurable	1 ms for ACT2OFF 26 ms for OFF2ACT	SWOFF_DLY	OTP configurable	OTP configurable
SW_RST (register bit)	No	N/A	N/A	0	OTP configurable	OTP configurable
DEV_ON(5) (register bit)	No	N/A	N/A	0	SWORST	SD
VSYS_LO (internal event)	No	N/A		0	OTP configurable	OTP configurable
POWERHOLD(6) (pin)	No	Low		0	SWORST	SD
GPADC_SHUTDOWN	Yes	N/A	N/A	SWOFF_DLY	OTP configurable	OTP configurable

(1) SWOFF_DLY is the same for all requests. When configured (in the PMU_CONFIG register) to a specific value (0, 1, 2, or 4 s), the value is applied to all OFF requests.
(2) The reset level is selectable as HWRST (a wide set of registers is reset to default values) or SWORTS (a more limited set of registers is reset). See Section 5.3.7.
(3) The OFF requests in the reset sequence are configured to force the EPC to execute either a shutdown (SD) or a cold restart (CR). Configuration occurs in the SWOFF_COLDRST register.
- When configured to generate a shutdown, the EPC executes a transition to the OFF state (SLP2OFF or ACT2OFF power sequence) and remains in the OFF state.
- When configured to generate a cold restart, the EPC executes a transition to the OFF state (SLP2OFF or ACT2OFF power sequence) and restarts, transitioning to the ACTIVE state (OFF2ACT power sequence) if none of the ON request gating conditions are present.

(4) The watchdog is disabled by default. Software can enable watchdog and lock (write protect) watchdog register (WATCHDOG).
(5) The DEV_ON event has a lower priority than other ON events, meaning that DEV_ON forces the device to go to the OFF state only if no other ON conditions keep the device active (POWERHOLD).
(6) The POWERHOLD event has a lower priority than other ON events, meaning that POWERHOLD forces the device to go to the OFF state only if no other ON conditions keep the device active (DEV_ON).

5.3.2.3 SLEEP and WAKE Requests

The device transitions from the ACTIVE to the SLEEP state after receiving a SLEEP request. Upon this request, internal resources as well as user-defined resources will enter the low-power mode as predefined by the user. The states of the resources during ACTIVE and SLEEP states are defined in the LDO*_CTRL and SMPSx_CTRL registers.

Table 5-4 lists the SLEEP requests. Any of theses events trigger the ACT2SLP sequence unless pending interrupts (unmasked) are present. Once the device enters the SLEEP state, only an interrupt or an NSLEEP signal can generate a WAKE request to wake up the device (exit from the SLEEP state). A WAKE request (only during the SLEEP state) wakes up the device and triggers a SLP2ACT or a SLP2OFF power sequence.

Table 5-4. SLEEP Requests

EVENT	MASKABLE	POLARITY	COMMENT
NSLEEP (pin)	Yes (Default: Masked)	Low	Level sensitive

For each resource, a transition from the ACTIVE state to the SLEEP state or from the SLEEP state to the ACTIVE state is controlled in two different ways which are described as follows:

- Through EPC sequencing (ACT2SLP or SLP2ACT power sequence) when the resource is associated to the NSLEEP signal.

Copyright © 2015–2019, Texas Instruments Incorporated

- Through direct control of the resource power mode (ACTIVE or SLEEP) in which case the user can bypass SLEEP and WAKE sequencing by having resources assigned to two external control signals (ENABLE1 and ENABLE2). These signals have a direct control on the power modes (ACTIVE or SLEEP) of any resources associated to them and they trigger an immediate switch from one mode to the other, regardless of the EPC sequencing.

Therefore, all resources can be associated to three external pins (NSLEEP, ENABLE1, and ENABLE2) and can switch between the SLEEP and ACTIVE states. Table 5-5 outlines the type of state transition each resource undergoes according to the logic combination of the NSLEEP, ENABLE1 and ENABLE2 assignments.

Table 5-5. Resources SLEEP and ACTIVE Assignments(1)

ENABLE1 ASSIGNMENT	ENABLE2 ASSIGNMENT	NSLEEP ASSIGNMENT	ENABLE1 PIN STATE	ENABLE2 PIN STATE	NSLEEP PIN STATE	STATE	TRANSITION
0	0	0	Don't care	Don't care	Don't care	ACTIVE	None
0	0	1	Don't care	Don't care	0 ↔ 1	SLEEP ↔ ACTIVE	Sequenced
0	1	0	Don't care	0 ↔ 1	Don't care	SLEEP ↔ ACTIVE	Immediate
0	1	1	Don't care	0	0 ↔ 1	SLEEP ↔ ACTIVE	Sequenced
				1	0 ↔ 1	ACTIVE	None
				0 ↔ 1	0	SLEEP ↔ ACTIVE	Immediate
				0 ↔ 1	1	ACTIVE	None
1	0	0	0 ↔ 1	Don't care	Don't care	SLEEP ↔ ACTIVE	Immediate
1	0	1	0	Don't care	0 ↔ 1	SLEEP ↔ ACTIVE	Sequenced
			1		0 ↔ 1	ACTIVE	None
			0 ↔ 1		0	SLEEP ↔ ACTIVE	Immediate
			0 ↔ 1		1	ACTIVE	None
1	1	0	0	0 ↔ 1	Don't care	SLEEP ↔ ACTIVE	Immediate
			1	0 ↔ 1		ACTIVE	None
			0 ↔ 1	0		SLEEP ↔ ACTIVE	Immediate
			0 ↔ 1	1		ACTIVE	None
1	1	1	0	0	0 ↔ 1	SLEEP ↔ ACTIVE	Sequenced
			0	1	0 ↔ 1	ACTIVE	None
			1	0	0 ↔ 1	ACTIVE	None
			1	1	0 ↔ 1	ACTIVE	None
			0	0 ↔ 1	0	SLEEP ↔ ACTIVE	Immediate
			0	0 ↔ 1	1	ACTIVE	None
			1	0 ↔ 1	0	ACTIVE	None
			1	0 ↔ 1	1	ACTIVE	None
			0 ↔ 1	0	0	SLEEP ↔ ACTIVE	Immediate
			0 ↔ 1	0	1	ACTIVE	None
			0 ↔ 1	1	0	ACTIVE	None
			0 ↔ 1	1	1	ACTIVE	None

Copyright © 2015–2019, Texas Instruments Incorporated

(1) **Notes:**

- The polarity of the NSLEEP, ENABLE1, and ENABLE2 signals is configurable through the POLARITY_CTRL register. By default:
  - ENABLE1 and ENABLE2 are active high, meaning a transition from 0 to 1 requests a transition from SLEEP state to ACTIVE state.
  - NSLEEP is active low, meaning a transition from 1 to 0 requests a transition from ACTIVE state to SLEEP state.
- Resource assignments to the NSLEEP, ENABLE1, and ENABLE2 signals are configured in the ENABLEx_YYY_ASSIGN and NSLEEP_YYY_ASSIGN registers (where x = 1 or 2 and YYY = RES, SMPS, or LDO).
- Several resources can be assigned to the same ENABLE signal (ENABLE1 or ENABLE2) and therefore, when triggered, they all switch their power mode at the same time.
- When resources are assigned only to the NSLEEP signal, the respective switching order is controlled and defined in the power sequence.
- When a resource is not assigned to any signal (NSLEEP, ENABLE1, or ENABLE2), it never switches from the ACTIVE state to the SLEEP state. The resource always remains in ACTIVE mode.

5.3.3 Power Sequences

A power sequence is an automatic preprogrammed sequence the TPS65917-Q1 device configures its resources, which include the states of the SMPSs, LDOs, 32-kHz clock, and part of the GPIOs (REGEN signals). For a detailed description of the GPIOs signals, please refer to Section 5.9.

Figure 5-3 shows an example of an OFF2ACT transition followed by an ACT2OFF transition. The sequence is triggered through PWRON pin and the resources controlled (for this example) are: SMPS3 (VIO), LDO1, SMPS2, LDO2, REGEN1, LDO5, and LDO3. The time between each resource enable and disable (TinstX) is also part of the preprogrammed sequence definition.

When a resource is not assigned to any power sequence, it remains in off mode. The user (through software) can enable and configure this resource independently when the power sequence completes.

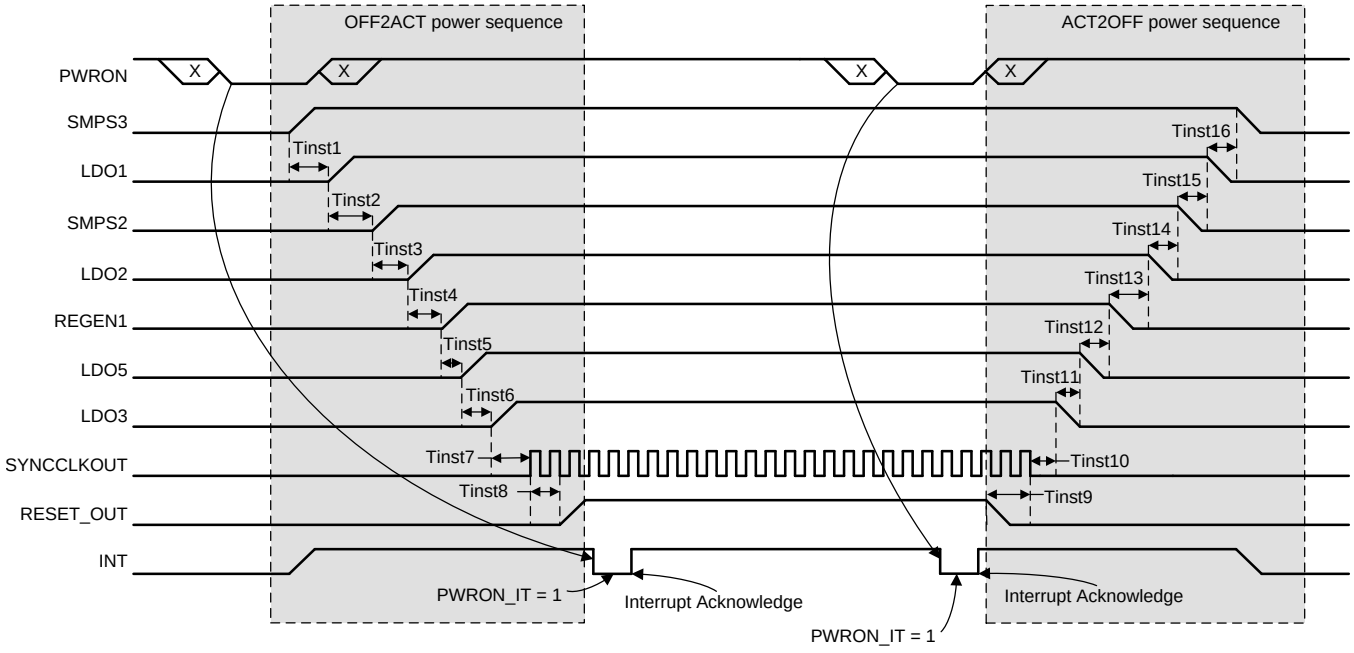

Figure 5-3. Power Sequence Example

As the power sequences of the TPS65917-Q1 device are defined according to the processor requirements, the total time for the completion of the power sequence will vary across various system definitions.

Copyright © 2015–2019, Texas Instruments Incorporated

5.3.4 Device Power Up Timing

Figure 5-4 shows the timing diagram of the TPS65917-Q1 after the first supply detection.

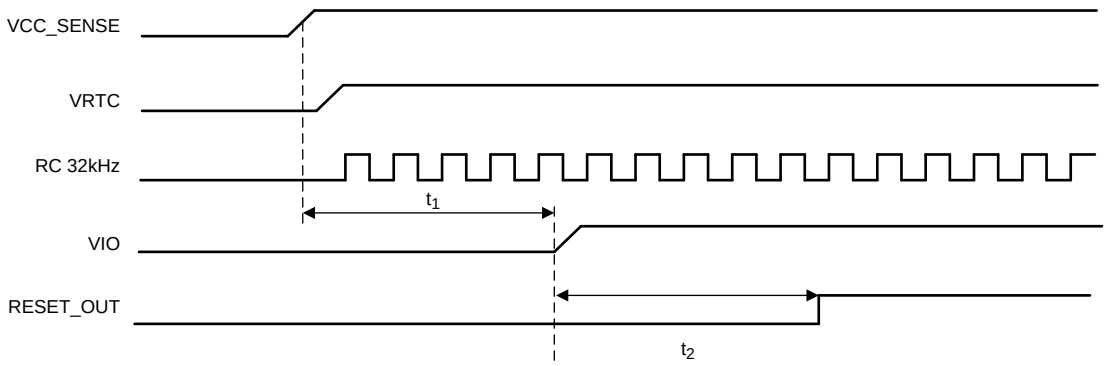

Figure 5-4. TPS65917-Q1 Power-Up Sequence After FSD

The time t_1 is the delay from VCC crossing the POR threshold to VIO rising up. The time t_1 must be at least 6 ms. If the time from VCC to VIO is less than 6 ms, the VIO buffers will be supplied while the OTP is still being initialized, which could cause glitches on any VIO output buffer. Supplying VIO at least 6 ms after supplying VCC ensures that the OTP is initialized and output buffers are held low when VIO is supplied.

The time t_2 is the delay between the start of the power-up sequence and the RESET_OUT release. The RESET_OUT resource is released when the power-up sequence is complete. The duration of the power-up sequence depends on OTP programming.

5.3.5 Power-On Acknowledge

The PMIC is designed to support the following power-on acknowledge modes: POWERHOLD mode and AUTODEVON mode.

5.3.5.1 POWERHOLD Mode

In POWERHOLD mode, the power-on acknowledge is received through a dedicated pin, POWERHOLD. When an ON request is received, the device initiates the power-up sequence and asserts the RESET_OUT pin high while the device is in the ACTIVE state (reset released). The device remains in ACTIVE state for a fixed delay of 8 seconds and then automatically shuts down. During this timeframe, to keep the device active, the host processor must assert and keep the POWERHOLD pin high. The device interprets a the high to low transition of the POWERHOLD pin as an OFF request.

Figure 5-5 shows the POWERHOLD mode timing diagram.

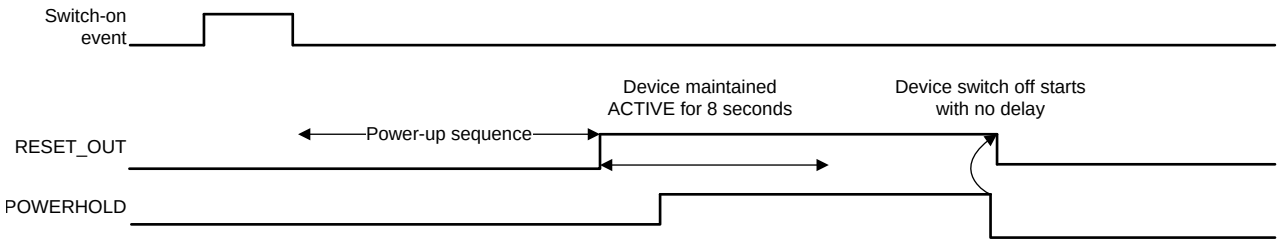

Figure 5-5. POWERHOLD Mode Timing Diagram

5.3.5.2 AUTODEVON Mode

In AUTODEVON mode, at the end of the power-up sequence, the DEV_CTRL.DEV_ON register bit is automatically set to 1 and the device remains in the ACTIVE state until the host processor clears this bit. No dedicated signal from processor is required to maintain the PMIC in the ACTIVE state.

Figure 5-6 and Figure 5-7 show the AUTODEVON mode timing diagrams.

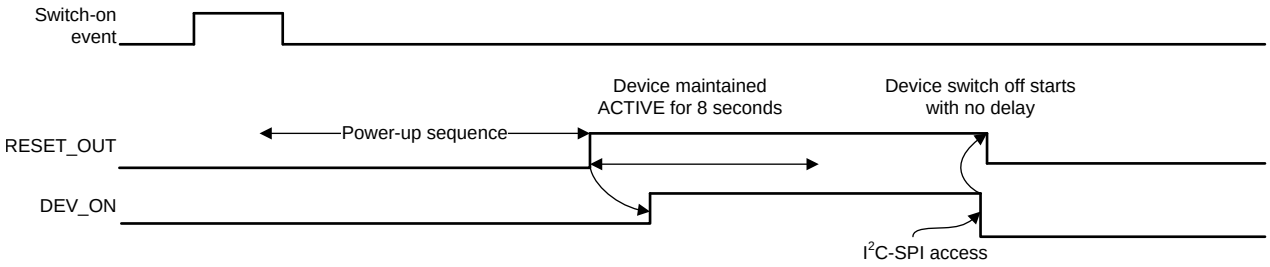

Figure 5-6. AUTODEVON Mode Timing Diagram

The DEV_ON bit can also be configured so that it is not auto-updated (set to 1) at the end of the power-up sequence. In this case, the device functions similarly to when it is in the POWERHOLD mode, except that the host has control over the device using the DEV_CTRL.DEV_ON register bit instead of the POWERHOLD pin. Therefore, to maintain the device in the ACTIVE state, the host must set and keep this bit at 1.

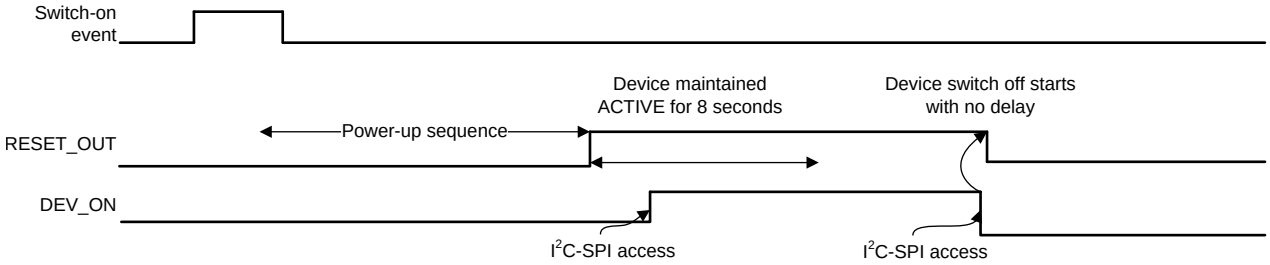

Figure 5-7. DEV_ON Mode Timing Diagram

5.3.6 BOOT Configuration

All TPS65917-Q1 resource settings are stored in registers. Therefore, any platform-related settings are linked to an action which alters these registers. This action is either a static update (register initialization value) or a dynamic update of the register (from the user or a power sequence).

Resources and platform settings are stored in nonvolatile memory (OTP). These settings are defined as follows:

Static platform settings These settings define, for example, the SMPS and LDO default voltages, GPIO functionality, and TPS65917-Q1 switch-on events.

Sequence platform settings These settings define TPS65917-Q1 power sequences between state transitions An example includes the OFF2ACT sequence when transitioning from OFF state to ACTIVE state. Each power sequence is composed of several register accesses that define the resources (and the corresponding registers) that must be updated during the respective state transition. Small modifications from the main sequence can be defined with the BOOT pin as long as the OTP memory size constraint is respected. The user can overwrite these settings when the power sequence completes.

Copyright © 2015–2019, Texas Instruments Incorporated

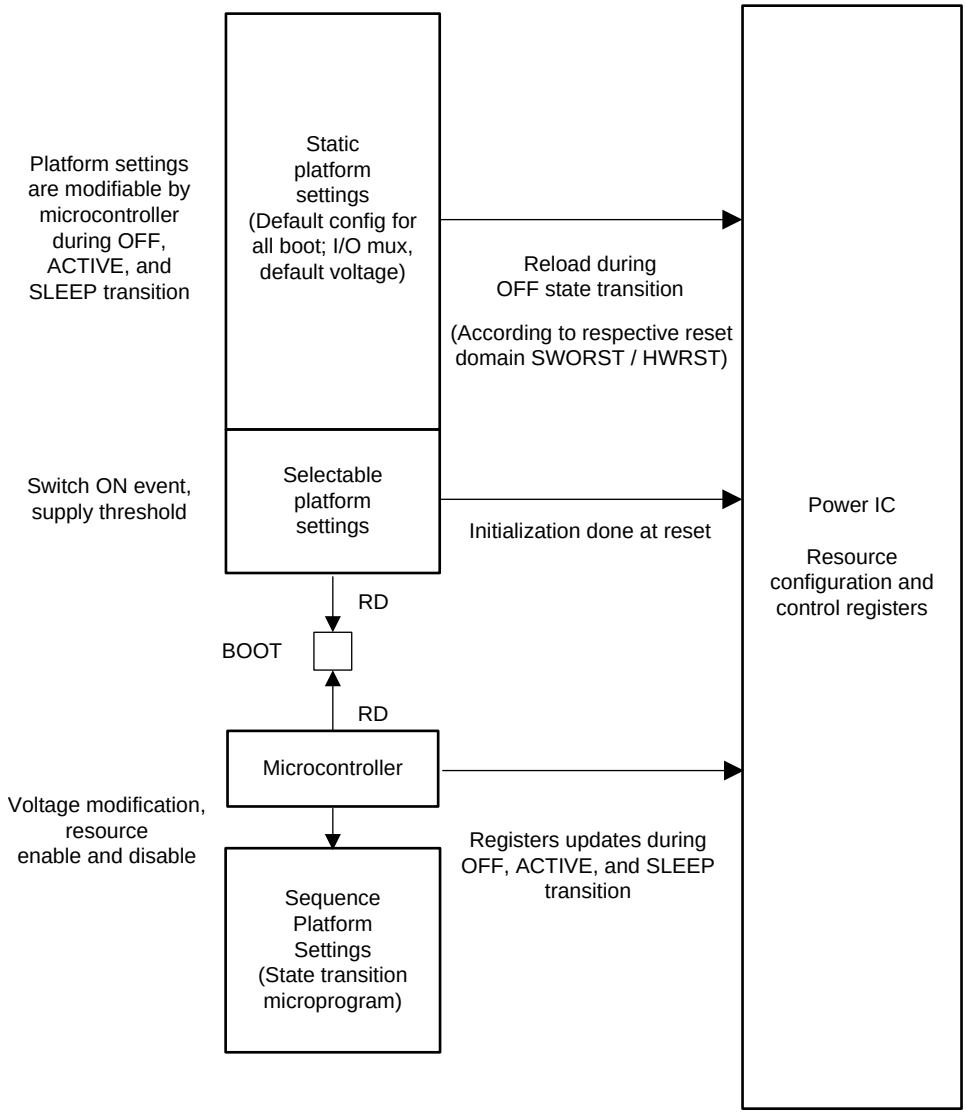

Figure 5-8. Boot Pins Control

5.3.6.1 Boot Pin Usage and Connection

Table 5-6 lists the associated configurations of the boot pins.

Table 5-6. Boot Pins Associated Configurations

BOOT	OTP CONFIGURATION	POWER SEQUENCE SELECTOR
0	OTP5 (0x00~0x2F)	Sel_0
1	OTP5 (0x30~0x5F)	Sel_1

The BOOT pin must be grounded or pulled up.

The status of the BOOT pin is latched at the end of the transition from OFF to ACTIVE mode and stored in the BOOT_STATUS register.

The BOOT pin can also be used as static selectors during execution of the power sequence. This static selection provides from within a static power sequence, to branch to different instructions. This static selection allows the selection of power sequences (or subpart of power sequences) without altering the power sequences themselves in OTP.

Copyright © 2015–2019, Texas Instruments Incorporated

5.3.7 Reset Levels

The TPS65917-Q1 resource control registers are defined by the following three categories:

- Power-on request (POR) registers
- Hardware (HW) registers
- Switchoff (SWO) registers

These registers are associated to three levels of reset which are described as follows

Power-on reset (POR) A POR occurs when the device receives supplies and transition from the NO SUPPLY state to the BACKUP state. The POR is the global device reset which resets all registers.

The values of the registers in this domain will retain their value under HWRST and SWORST event. This ensures the information which contains the cause of the switch off event is retained when the device is reset to its default operating state.

The following registers are reset only during POR event:

- SMPS_THERMAL_STATUS
- SMPS_SHORT_STATUS
- SMPS_POWERGOOD_MASK
- LDO_SHORT_STATUS
- SWOFF_STATUS

This list is indicative only; a full list and bit details can be found in the *TPS65917-Q1 Register Map* (SLVUAH1).

Hardware reset (HWRST) A HWRST occurs when any OFF request is configured to generate a hardware reset. Configuration of the reset level is programmed in the SWOFF_HWRST register. This reset triggers a transition to the OFF state from either the ACTIVE or SLEEP state, and therefore executes the ACT2OFF or SLP2OFF sequence.

A HWRST will reset all registers in the HWRST and the SWORST domain, but leave the registers in the POR domain unchanged.

The following registers are in the HWRST domain:

- SMPS control registers expect MODE_ACTIVE and MODE_SLEEP bits
- LDO control registers expect MODE_ACTIVE and MODE_SLEEP bits
- VSYS_LO Threshold
- PMU_CONFIG & PMU_CTRL
- NSLEEP, ENABLE1, and ENABLE2 resource assignment registers
- Input and Output, including the GPIO pins, Configuration and Control registers
- Interrupt Control, Status and Mask Registers
- OTP CRC results register
- GPADC Configuration and Results registers

This list is indicative only; a full list and bit details can be found in the *TPS65917-Q1 Register Map* (SLVUAH1).

Switch-off reset (SWORST) A SWORST occurs when any OFF request is configured to not generate a hardware reset. Configuration is done in the SWOFF_HWRST register. This reset acts like the HWRST, except only the SWO registers are reset. The TPS65917-Q1 goes into the OFF state, from either ACTIVE or SLEEP, and therefore executes the ACT2OFF or SLP2OFF sequence.

A SWORST only resets registers in the SWORST domain, but leave the registers in the HWRST and POR domains unchanged.

The following registers are in the SWORST domain:

- SMPS control registers for voltage levels and operating mode control
- LDO control registers for voltage levels and operating mode control
- DEV_CTRL & POWER_CTRL registers
- VSYS_MON enable and result register
- WATCHDOG configuration register
- PLL and REGEN Control registers

This list is indicative only; a full list and bit details can be found in the *TPS65917-Q1 Register*

Copyright © 2015–2019, Texas Instruments Incorporated

Map (SLVUAH1).

Table 5-7 lists the reset levels, and Figure 5-9 shows the reset levels versus registers.

Table 5-7. Reset Levels

LEVEL	RESET TAG	REGISTERS AFFECTED	COMMENT
0	POR	POR, HW, SWO	This reset level is the lowest level, for which all registers are reset.
1	HWRST	HW, SWO	During hardware reset (HWRST), all registers are reset except the POR registers.
2	SWORST	SWO	Only the SWO registers are reset.

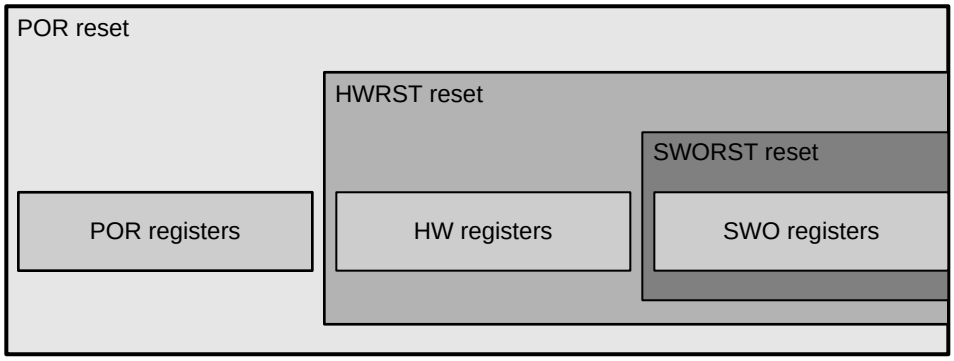

Figure 5-9. Reset Levels versus Registers

5.3.8 INT

The INT output is the interrupt request to the processor. By default, the INT pin is push-pull output and active low (when interrupt is pending, output is driven low). By default, the line is masked when the PMIC is in sleep state (configurable by setting the INT_MASK_IN_SLEEP bit). Individual interrupt sources can be masked according to Table 5-12 .

5.3.9 Warm Reset

The TPS65917-Q1 device can execute a warm reset. The main purpose of this reset is to recover the device from a locked or unknown state by reloading default configuration. The warm reset is triggered by the NRESWARM pin. During a warm reset, the OFF2ACT sequence is executed regardless of the state (ACTIVE or SLEEP) and the device returns to or remains in the ACTIVE state. Resources that are not part of the OFF2ACT sequence are not impacted by a warm reset and retain the previous state. Resources that are part of power-up sequence go to active mode, and output voltage level is reloaded from OTP or kept in the previous value depending on the WR_S bit in the SMPSx_CTRL or LDOx_CTRL register.

5.3.10 RESET_IN

The RESET_IN function causes a switch-off event (either a cold reset or shutdown). Table 5-3 shows that the RESET_IN behavior is programmable. The RESET_IN input has a 1-ms debounce that is independent of the selected polarity. In addition, after the device goes into the OFF state, a 25-ms masking period occurs before a new RESET_IN event is accepted, which is equivalent to a 26-ms debounce for an OFF2ACT request.

5.4 Power Resources (Step-Down and Step-Up SMPS Regulators, LDOs)

The power resources provided by the TPS65917-Q1 device include inductor-based SMPSs and linear LDOs. These supply resources provide the required power to the external processor cores, external components, and to modules embedded in the TPS65917-Q1 device. Table 5-8 lists the power resources provided by the TPS65917-Q1 device.

Copyright © 2015–2019, Texas Instruments Incorporated

Table 5-8. Power Resources

RESOURCE	TYPE	VOLTAGE	CURRENT	COMMENTS
SMPS1, SMPS2	SMPS	0.7 to 1.65 V, 10-mV steps 1 to 3.3 V, 20-mV steps	7 A	Can be used as 1 dual-phase (7 A) or 2 single-phase (3.5 A) regulators
SMPS3	SMPS	0.7 to 1.65 V, 10-mV steps 1 to 3.3 V, 20-mV steps	3 A	
SMPS4	SMPS	0.7 to 1.65 V, 10-mV steps 1 to 3.3 V, 20-mV steps	1.5 A	
SMPS5	SMPS	0.7 to 1.65 V, 10-mV steps 1 to 3.3 V, 20-mV steps	2 A	
LDO1, LDO2	LDO	0.9 to 3.3 V, 50-mV steps	300 mA	
LDO3	LDO	0.9 to 3.3 V, 50-mV steps	200 mA	
LDO4	LDO	0.9 to 3.3 V, 50-mV steps	200 mA	
LDO5	LDO	0.9 to 3.3 V, 50-mV steps	100 mA	Low-noise LDO

5.4.1 Step-Down Regulators

The synchronous step-down converter used in the power-management core has high efficiency while enabling operation with cost-competitive and small external components. The SMPSx_IN supply pins of all the converters should be individually connected to the VSYS supply (VCCA pin). Two of these configurable step-down converters can be multiphased to create up to a 7-A rail. All of the step-down converters can synchronize to an external clock source between 1.7 MHz and 2.7 MHz, or an internal fallback clock at 2.2 MHz.

The step-down converter supports two operating modes, which can be selected independently. These two operating modes are defined as follows:

Forced PWM mode: In forced PWM mode, the device avoids pulse skipping and allows easy filtering of the switch noise by external filter components. The drawback is the higher IDDQ at low-output current levels.

Eco-mode (lowest quiescent-current mode): Each step-down converter can be individually controlled to enter a low quiescent-current mode. In ECO-mode, the quiescent current is reduced and the output voltage is supervised by a comparator while most of the control circuitry disabled to save power. The regulators should not be enabled under ECO-mode to ensure the stability of the output. ECO-mode should only be enabled when a converter has less than 5 mA of load current and V_O can remain constant. In addition, ECO-mode should be disabled before a load-transient step to allow the converter to respond in a timely manner to the excess current draw.

To ensure proper operation of the converter while it is in ECO-mode, the output voltage level must be less then 70% of the input supply voltage level. If the V_O of the converter is greater than 2.8 V, a safety feature of the device monitors the supply voltage of the converter and automatically switch off the converter if the input voltage falls below 4 V. The purpose of this safety mechanism is to prevent damage to the converter because of design limitation while the converter is in ECO mode.

In addition to the operating modes, the following parameters can be selected for the regulators:

- Powergood: See Section 5.4.1.3.
- Output discharge: Each switching regulator is equipped with an output discharge enable bit. When this bit is set to 1, the output of the regulator is discharged to ground with the equivalent of a 9-Ω resistor when the regulator is disabled. If the regulator enable bit is set, the discharge bit of the regulator is ignored.
- Output-current monitoring: The GPADC can monitor the SMPS output current. One SMPS at a time can be selected for measurement from the following: SMPS1, SMPS2, SMPS1&2, SMPS3, and SMPS5. Selection is controlled through the GPADC_SMPS_ILMONITOR_EN register.

Copyright © 2015–2019, Texas Instruments Incorporated

- Enable control of the Step-down converters: The step-down converter enable and disable is part of the flexible power-up and power-down state-machine. Each converter can be programmed such that it is powered up automatically to a preselected voltage in one of the time slots after a power-on condition occurs. Alternatively, each SMPS can be controlled by a dedicated pin. The NSLEEP, ENABLE1, and ENABLE2 pins can be mapped to any resource (LDOs, SMPS converter, 32-kHz clock output, or GPIO) to enable or disable the pin. Each SMPS can also be enabled and disabled through access to the I^2C registers.

5.4.1.1 Output Voltage and Mode Selection

One-time programmable (OTP) bits define the default output voltage and enabling of the regulator during the start-up sequence.

After start up, while the SMPS is in forced PWM mode, software can change the output voltage by setting the RANGE and VSEL bits in the SMPSx_VOLTAGE register. When the SMPS enters ECO mode, the output voltage cannot be changed. Setting the SMPSx_VOLTAGE.VSEL register to 0x0 disables the SMPS (turns off). The value for the RANGE bit cannot be changed when the SMPS is active. To change the operating voltage range, the SMPS must be disabled.

The operating mode (ECO, forced PWM, or off) of an SMPS when the TPS65917-Q1 device is in ACTIVE state can be selected in the SMPSx_CTRL register by setting the MODE_ACTIVE[1:0] bit field.

The operating mode of an SMPSx when the TPS65917-Q1 device is in the SLEEP state is controlled by the MODE_SLEEP[1:0] bit field, depending on the SMPS assignment to the NSLEEP, ENABLE1, and ENABLE2 pins (see Table 5-5).

The soft-start slew rate ($t_{(ramp)}$) is fixed.

The pulldown discharge resistance for off mode is enabled and disabled in the SMPS_PD_CTRL register. By default, discharge is enabled. Two pulldown resistors, one at SMPSx_SW and one at SMPS_FDBK node, are enabled or disabled together. For multiphase SMPS, pulldown is in the master phase.

SMPS behavior for warm reset (reload default values or keep current values) is defined by the SMPSx_CTRL.WR_S bit.

5.4.1.2 Clock Generation for SMPS

In PWM mode, the SMPSs are synchronized on an external input clock, SYNCDCDC (muxed with GPIO_3), whereas in ECO mode, the switching frequency is based on an internal RC oscillator.

For PWM mode, a PLL is present to buffer the external clock input from SYNCDCDC pin, and to create 5 clock signals for the 5 SMPSs with different phases.

Figure 5-10 shows the frequency of SYNCDCDC input clock (f_{SYNC}) and the frequency of PLL output signal (f_{SW}).

Copyright © 2015–2019, Texas Instruments Incorporated

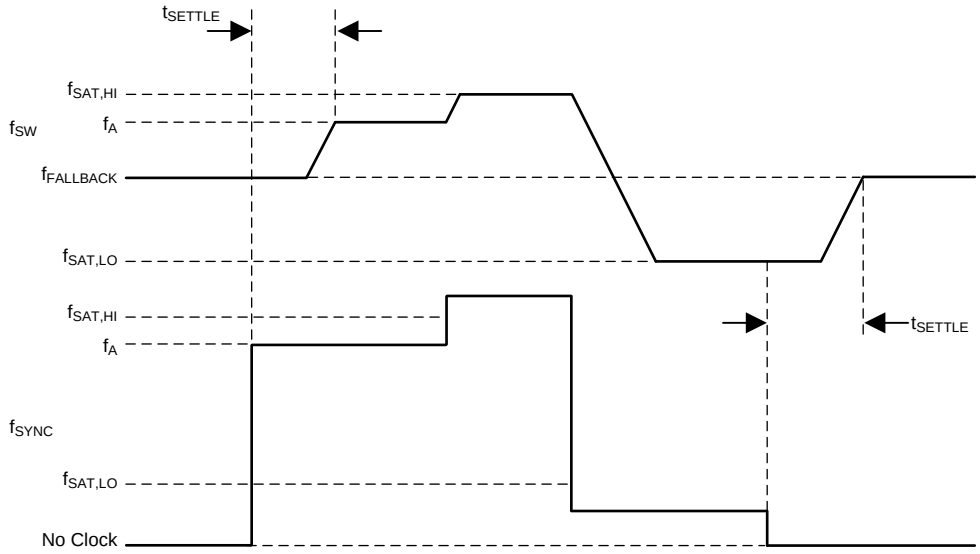

Figure 5-10. Synchronized Clock Frequency

When no clock is present on the SYNCDCDC pin, the PLL generates a clock with a frequency equal to the fallback frequency ($f_{FALLBACK}$).

When a clock is present on the SYNCDCDC pin with a frequency between the low and high PLL saturation frequencies ($f_{SAT,LO}$ and $f_{SAT,HI}$), then the PLL is synchronized on the SYNCDCDC clock and generates a clock with frequency equal to f_{SYNC}.

If f_{SYNC} is higher than $f_{SAT,HI}$, then the PLL generates a clock with a frequency equal to $f_{SAT,HI}$.

If f_{SYNC} is smaller than $f_{SAT,LO}$, then the PLL generates a clock with a frequency equal to $f_{SAT,LO}$.

Dithering can be achieved by changing the frequency of the clock provided on the SYNCDCDC pin. The sync clock dither specification parameters are based on a triangular dither pattern, but other patterns that comply with the minimum and maximum sync frequency range and the maximum dither slope can also be used, as seen in Figure 5-11.

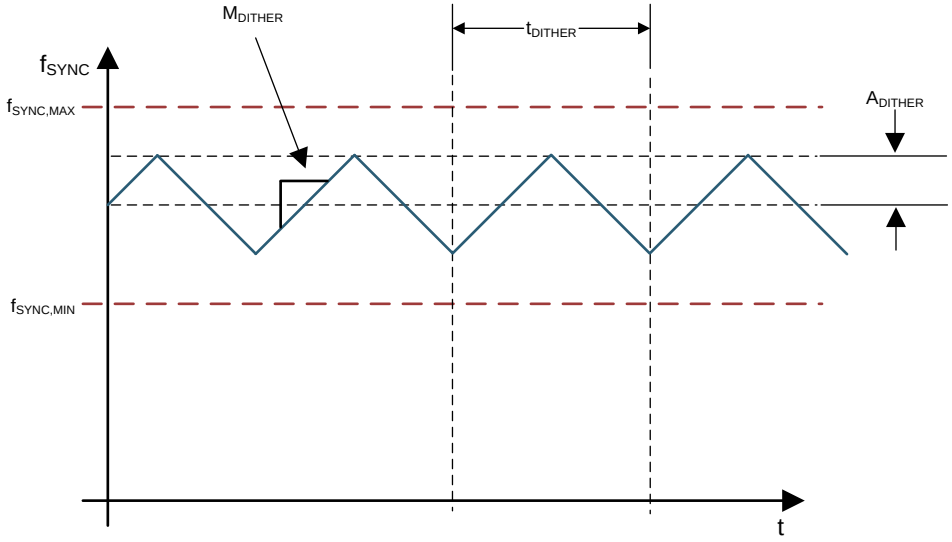

Figure 5-11. Synchronized Clock Frequency Range and Dither

Copyright © 2015–2019, Texas Instruments Incorporated

5.4.1.3 Current Monitoring and Short Circuit Detection

SMPS1, SMPS2, SMPS1&2, and SMPS3 include several other features.

The SMPS sink current limitation is controlled with the SMPS_NEGATIVE_CURRENT_LIMIT_EN register. The limitation is enabled by default.

Channel 4 of the GPADC can be used to monitor the output current of SMPS1, SMPS2, SMPS1&2, SMPS3, or SMPS5. Load current monitoring is enabled for a given SMPS in the SMPS_ILMONITOR_EN register. SMPS output-power monitoring is intended to be used during the steady state of the output voltage, and is supported in PWM mode only.

Use Equation 1 to calculate the SMPS output-current result.

$$I_{LOAD} = I_{FS} \times \text{GPADC code} / (2^{12} - 1) - I_{OS} \quad (1)$$

where

- $I_{FS} = I_{FS0} \times K$
- $IOS = I_{OS0} \times K$
- K is the number of SMPS active phases

Use Equation 2 to calculate the temperature compensated result.

$$I_{LOAD} = I_{FS} \times \text{GPADC code} / ([2^{12} - 1] \times [1 + TC_R0 \times (TEMP-25)]) - I_{OS} \quad (2)$$

For the values of I_{FS0} and I_{OS0}, see Section 4.10.

The SMPS thermal monitoring is enabled (default) and disabled with the SMPS_THERMAL_EN register. When enabled, the SMPS thermal status is available in the SMPS_THERMAL_STATUS register. SMPS12, SMPS3, and SMPS5 have thermal protection. A unique thermal sensor is shared and protecting both SMPS1 and SMPS2. SMPS4 has no dedicated thermal protection.

Each SMPS has a detection for load current above I_{LIM}, indicating overcurrent or a shorted SMPS output. The SMPS_SHORT_STATUS register indicates any SMPS short condition. Depending on the setting of the INT2_MASK.SHORT register, an interrupt is generated upon any shorted SMPS. If a short occurs on any enabled SMPSs, the corresponding short status bit is set in the SMPS_SHORT_STATUS register. A switch-off signal is then sent to the corresponding SMPS, and it remains off until the corresponding bit in the SMPS_SHORT_STATUS register is cleared. This register is cleared on read, or by issuing a POR. The same behavior applies to LDO shorts using the LDO_SHORT_STATUS registers.

A short must occur on any enabled SMPS or LDO for at least 155 us to 185 us for the short detection to shut off the rail. During startup of the device, there is a 2 ms counter that masks any short-circuit shutdown. This counter starts when the device is enabled and the counter is reset when any SMPSx or LDOx rail becomes ACTIVE. When no rail has been enabled for 2 ms, the counter reaches its threshold and the short-circuit shutdown is no longer masked for the enabled SMPSs and LDOs.

5.4.1.4 POWERGOOD

The TPS65917-Q1 device includes an external POWERGOOD pin which indicates if the outputs of the SMPS are within the acceptable range of the programmed output voltage, and if the current loading for the SMPS is within the range of the current limit. Users can select whether POWERGOOD reports the result of both voltage and current monitoring or only current monitoring. This selection applies to all SMPSs in the SMPS_POWERGOOD_MASK2 register.POWERGOOD_TYPE_SELECT register. When both the voltage and current are monitored, the POWERGOOD signal indicates whether or not all SMPS outputs are within a certain percentage, as specified by the V_{SMPSPG} parameter, of the programmed value while the load current is below I_{LIM}.

Copyright © 2015–2019, Texas Instruments Incorporated

All POWERGOOD sources can be masked in the SMPS_POWERGOOD_MASK1 and SMPS_POWERGOOD_MASK2 registers. By default, only the SMPS1 rail (or SMPS12 rail if in dual phase) is monitored. When an SMPS is disabled, it should be masked in the SMPS_POWERGOOD_MASKx registers to prevent the SMPS from forcing the POWERGOOD pin to go inactive. When the SMPS voltage is transitioning from one target voltage to another because of a DVS command, voltage monitoring is internally masked and POWERGOOD is not impacted.

The GPADC result for SMPS output current monitoring can be included in POWERGOOD by setting the SMPS_COMPMODE bit to 1. The GPADC can monitor only one SMPS.

Figure 5-12 is the block diagram of the circuitry which constructs the logic output of the POWERGOOD pin.

CAUTION

When operating in dual phase, the SMPS12 current monitor may cause POWERGOOD to change to a low level (with default polarity) when transitioning from dual phase operation to single phase operation. TI recommends masking SMPS12 as a POWERGOOD source, using SMPS_POWERGOOD_MASK1, or debouncing the POWERGOOD signal if this POWERGOOD toggle is not desired in the application design.

Copyright © 2015–2019, Texas Instruments Incorporated

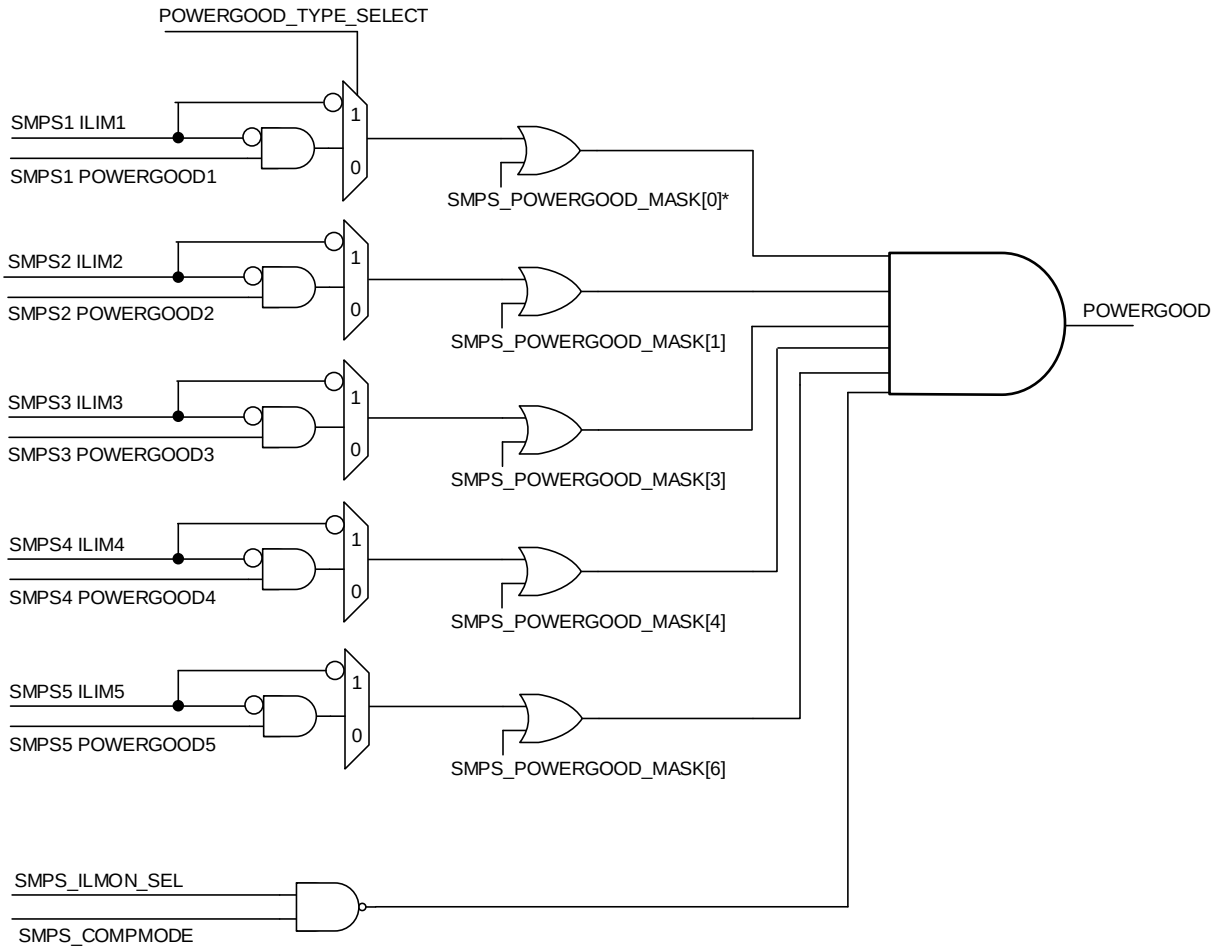

*When operating in dual phase, SMPS_POWERGOOD_MASK[0] controls the monitoring of SMPS12. SMPS_POWERGOOD_MASK[1] is masked internally with dual phase operation.

Figure 5-12. POWERGOOD Block Diagram

5.4.1.5 DVS-Capable Regulators

The Step-down converters, SMPS1, SMPS2, or SMPS1&2 and SMPS3, are DVS-capable and have some additional parameters for control. The slew rate of the output voltage during a voltage level change is fixed at 2.5 mV/µs. The control for two different voltage levels (roof and floor) with the NSLEEP, ENABLE1, and ENABLE2 signals is available. When the roof-floor control is not used (ROOF_FLOOR_EN = 0), the CMD bit in the SMPSx_FORCE register can select two different voltage levels.

Below are the steps for programming two difference output voltage levels (roof and floor) for the DVS-capable step-down converters:

- The NSLEEP, ENABLE1, or ENABLE2 pins can be used for roof-floor control of SMPS. For roof-floor operation, set the SMPSx_CTRL.ROOF_FLOOR_EN register, and assign SMPS to NSLEEP, ENABLE1, and ENABLE2 in the NSLEEP_SMPS_ASSIGN, ENABLE1_SMPS_ASSIGN, and ENABLE2_SMPS_ASSIGN registers, respectively. When the controlling pin is active, the value for the SMPS output is defined by the SMPSx_VOLTAGE register. When the controlling pin is not active, the value for the SMPS output is defined by the SMPSx_FORCE register.
- Set the second value for the output voltage with the SMPSx_FORCE.VSEL register. Setting this register to 0x0 turns off the SMPS.

Copyright © 2015–2019, Texas Instruments Incorporated

- Select which register, SMPSx_VOLTAGE or SMPSx_FORCE, to use with the SMPSx_FORCE.CMD bit. The default is the voltage setting of SMPSx_VOLTAGE. For the CMD bit to work, ensure that the SMPSx_CTRL.ROOF_FLOOR_EN bit is set to 0.

Figure 5-13 shows the SMPS controls for DVS.

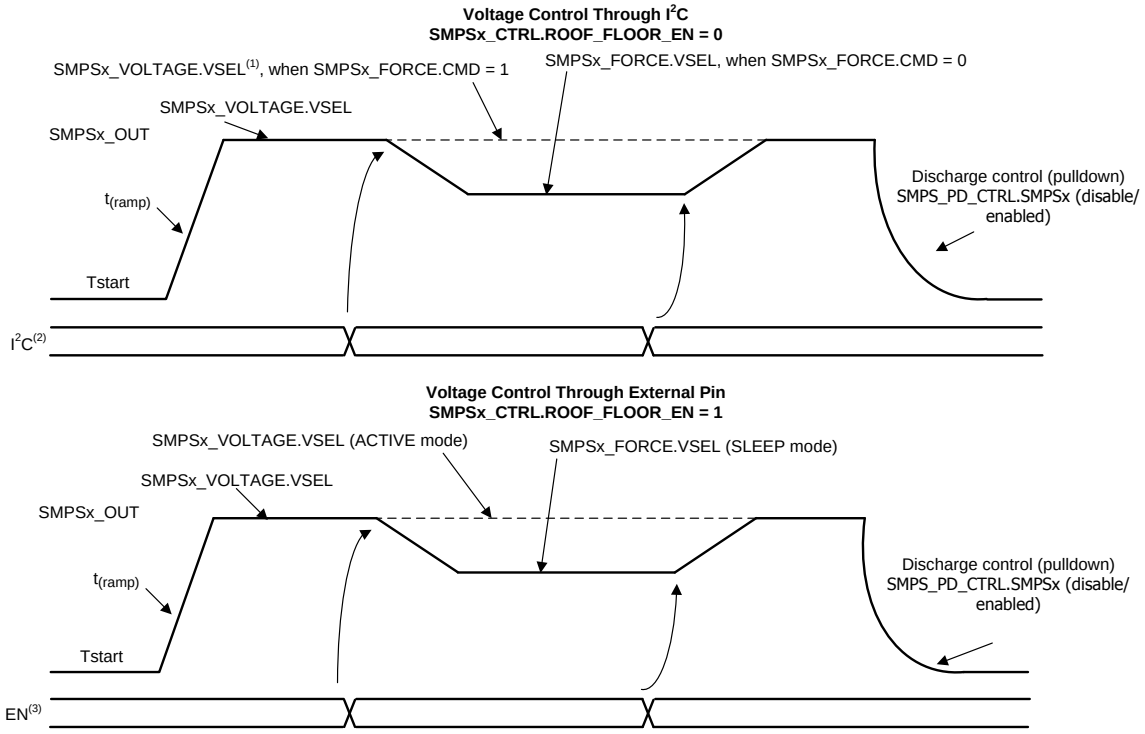

(1) **VSEL[6:0] (voltage selection)**:
SMPSx_VOLTAGE.RANGE = 0: OFF, 0.5 V to 1.65 V in 10-mV steps
SMPSx_VOLTAGE.RANGE = 1: 1 to 3.3 V in 20-mV steps

(2) **I²C**: Control through access to SMPSx_VOLTAGE, SMPSx_FORCE registers

(3) **EN**: Control through NSLEEP, ENABLE1, and ENABLE2 pins (see Table 5-5)

Figure 5-13. SMPS Controls for DVS

5.4.1.5.1 Non DVS-Capable Regulators

SMPS4 and SMPS5 are non-DVS-capable regulators. The slew rate of the output voltage is not controlled internally, and the converter achieves the new output voltage in JUMP mode. When changes to the output voltage are required, programming the changes to the output voltages of SMPS4 and SMPS5 at a rate slower than 2.5 mV/µs is recommended to avoid voltage overshoot or undershoot.

5.4.1.6 Step-Down Converters SMPS1, SMPS2 or SMPS1&2

The step-down converters, SMPS1 and SMPS2, can be used in two different configurations which are described as follows:

- SMPS1 and SMPS2 in single-phase configuration with each SMPS supporting a 3.5-A load current
- SMPS1&2 in dual-phase configuration supporting 7-A load current

SMPS1 and SMPS2 can be used as separate converters. In dual-phase configuration the two interleaved synchronous buck-regulator phases with built-in current sharing operate in opposite phases. For light loads, the converter automatically changes to single-phase operation.

Figure 5-14 shows the connections for dual-phase configurations.

Copyright © 2015–2019, Texas Instruments Incorporated

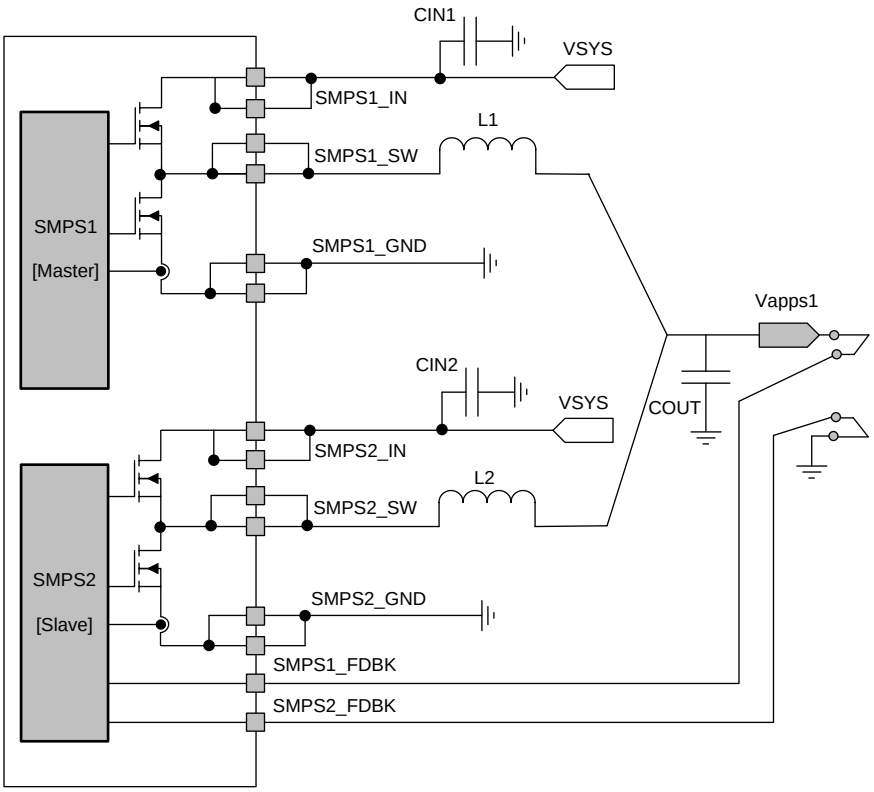

Figure 5-14. SMPS1&2 Dual-Phase Configuration

Below are the steps to program the SMPS1 and SMPS2 for single-phase or dual-phase operation:

- The OTP bit defines single-phase (SMPS1 and SMPS2) or dual-phase (SMPS1&2) operation. If dual-phase mode is selected, the SMPS12 registers control SMPS1&2.
- By default, SMPS1&2 operates in dual-phase mode for higher load currents and switches automatically to single-phase mode for low load currents. Forcing multiphase operation or single-phase operation is possible by setting the SMPS_CTRL.SMPS12_PHASE_CTRL[1:0] bits when the SMPS1&2 are loaded. Under no-load condition, do not force the multiphase operation because it causes SMPS12 to exhibit instability.

5.4.1.7 Step-Down Converters SMPS3, SMPS4, and SMPS5

SMPS3 is a buck converter supporting up to 3-A load current. SMPS4 and SMPS5 are also buck converters, with SMPS4 supporting up to 1.5-A load current, and SMPS5 supporting up to 2-A load current. SMPS3 is DVS-capable.

5.4.2 Low Dropout Regulators (LDOs)

All LDOs are integrated. They can be connected to the system supply, to an external buck boost SMPS, or to another preregulated voltage source. The output voltages of all LDOs can be selected, regardless of the LDO input voltage level, V_{IN}. No hardware protection is available to prevent software from selecting an improper output voltage if the V_{IN} minimum level is lower than the total DC-output voltage ($T_{DCOV(LDOx)}$) plus the dropout voltage ($D_{V(LDOx)}$). In such conditions, the output voltage is lower and nearly equal to the input supply. The output voltage of the regulator cannot be modified while the LDO is enabled from one voltage range (0.9 to 2.1 V) to the other voltage range (2.2 to 3.3 V). The regulator must be restarted in these cases. If an LDO is not needed, the external components do not need to be mounted. The TPS65917-Q1 device is not damaged by such configuration. The other functions do not depend on the unused LDOs and work properly.

Copyright © 2015–2019, Texas Instruments Incorporated

5.4.2.1 LDOVANA

The LDOVANA voltage regulator is dedicated to supply the analog functions of the TPS65917-Q1 device, such as the GPADC and other analog circuitry. The LDOVANA regulator is automatically enabled and disabled as needed. The automatic control optimizes the overall current consumption if the SLEEP state.

5.4.2.2 LDOVRTC

The LDOVRTC regulator supplies always-on functions, such as wake-up functions. This power resource is active as soon as a valid energy source is present.

This resource has two modes which are Normal mode and backup mode. The LDOVRTC regulator functions in normal mode when supplied from the main system power rail and is able to supply all digital components of the TPS65917-Q1 device. The LDOVRTC regulator functions backup mode when supplied from system power rail that is above the power-on reset threshold but below the system low threshold and is only able to supply always-on components.

The LDOVRTC regulator supplies the digital components of the TPS65917-Q1 device. In the BACKUP state, the digital activity is reduced to maintaining the wake up functions only. In the OFF state, the turn-on events and detection mechanism are added to the previous current load in the BACKUP state. In the BACKUP and OFF states, the external load on the LDOVRTC pin should not exceed 0.5 mA.
In the ACTIVE state, the LDOVRTC switches automatically into active mode. The reset is released and the clocks are available. In SLEEP state, the LDOVRTC is kept active. The reset is released and only the 32-kHz clock is available. To reduce power consumption, the user is still able to select low-power mode through the software.

NOTE

If V_{CC} is discharged rapidly and then resupplied, a POR may not be reliably generated. In this case a pulldown resistor can be added on the LDOVRTC output. See Section 5.15 for details.

5.4.2.3 LDO1 and LDO2

The LDO1 and LDO2 regulators have bypass capability to connect the input voltage to the output. This ability is useful, for example, as an input-output (I/O) supply of an SD card and preregulated with a 2.7 to 3.3 V supply. This ability allows switching between 1.8 V (normal LDO mode) and the preregulated supply (bypass mode).

5.4.2.4 Low-Noise LDO (LDO5)

LDO5 is specifically designed to supply noise sensitive circuits. This supply can be used to power circuits such as PLLs, oscillators, or other analog modules that require low noise on the supply.

5.4.2.5 Other LDOs

All other LDOs have the same output voltage capability which is from 0.9 to 3.3 V in 50-mV steps.

5.5 SMPS and LDO Input Supply Connections

To avoid leakage, all SMPSx_IN supply pins and the VCCA pin must be externally connected together.

The LDO preregulation from a boosted supply (voltage at LDOx_IN > voltage at VCCA) is supported if the output voltage of the LDO is 2.2 V (minimum).

5.6 First Supply Detection

The TPS65917-Q1 device can be configured to detect and wake up from a first supply-detection (FSD) event.

Copyright © 2015–2019, Texas Instruments Incorporated

When an automatic start from an FSD event is enabled, the PMIC powers up automatically when a supply is inserted, without waiting for a PWRON button press or other start-up event. An FSD event is detected when the VCCA pin voltage increases above the VSYS_LO threshold. Transition to ACTIVE state requires that the VCC_SENSE voltage increases above the VSYS_HI voltage.

The FSD feature is enabled through unmasking the corresponding interrupt. This event triggers the interrupt, FSD, to the interrupt (INT) line. When an FSD interrupt occurs, the source can be determined using the FSD_STATUS bit in the PMU_SECONDARY_INT register. An interrupt from an FSD event, if not masked, is a wake-up event. Interrupt masking is pre-programmed in the one time programmable memory (OTP) of the device. Any HWRST event sets the interrupt mask bits to the default (OTP) value. The FSD event can also be masked through the PMU_SECONDARY_INT register by setting the FSD_MASK bit.

5.7 Long-Press Key Detection

The TPS65917-Q1 device can detect a long press on a key (or pin), PWRON. Upon detection, the device generates a LONG_PRESS_KEY interrupt and then switches the system off. The key-press duration is configured through the LONG_PRESS_KEY.LPK_TIME bits.

5.8 12-Bit Sigma-Delta General-Purpose ADC (GPADC)

The features of the GPADC include the following:

The GPADC consists of a 12-bit sigma-delta ADC combined with a 8-input analog multiplexer. The running frequency of the GPADC is 2.5MHz. The GPADC lets the host processor monitor analog signals using analog-to-digital conversion on the input source. After the conversion is complete, an interrupt is generated to signal the host processor that the result of the conversion is ready to be accessed through the I^2C interface.

The GPADC supports 8 analog inputs. Two of these inputs are available on external pins and the remaining inputs are dedicated to VSYS supply voltage monitoring and internal resource monitoring.

Figure 5-15 shows the block diagram of the GPADC.

Copyright © 2015–2019, Texas Instruments Incorporated

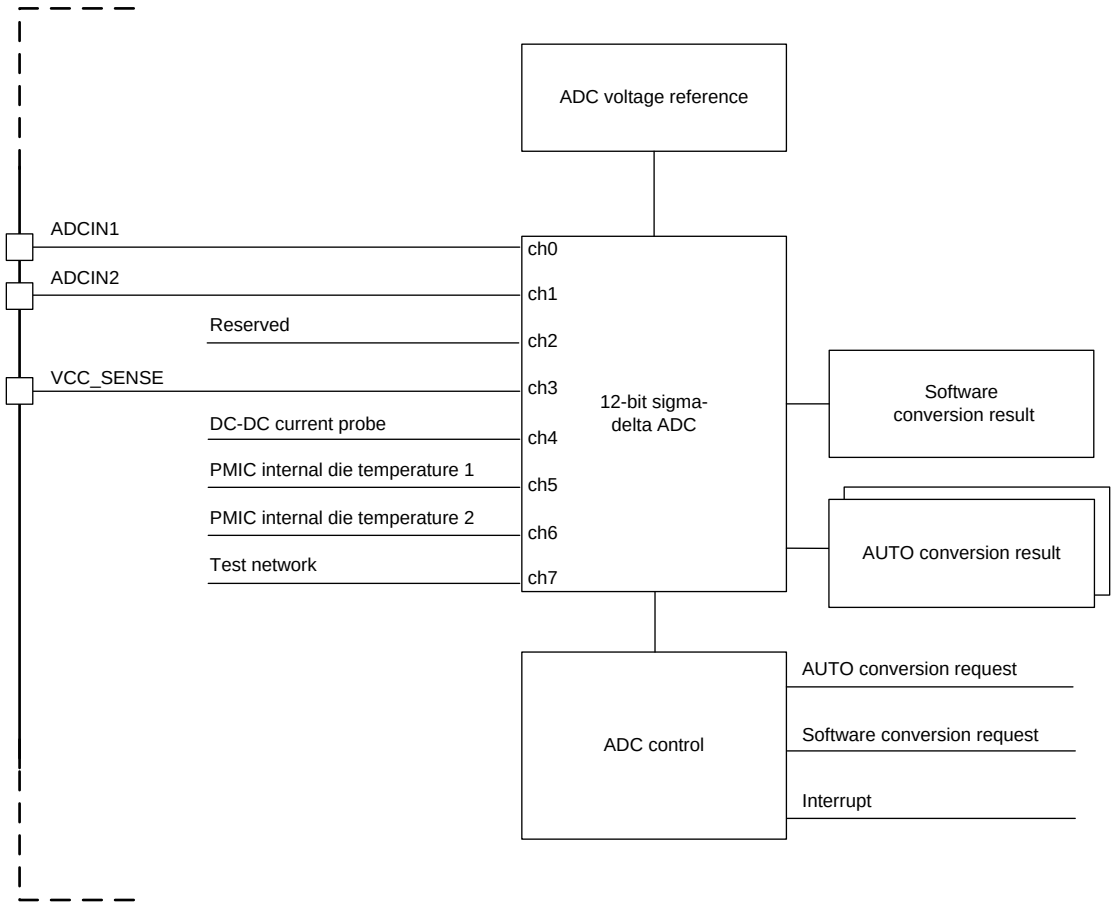

Figure 5-15. Block Diagram of the GPADC

The conversion requests are initiated by the host processor either by software through the I^2C or by periodical measurements.

Two kinds of conversion requests occur with the following priority:

1. Asynchronous conversion request (SW), see Section 5.8.1
2. Periodic conversion (AUTO), see Section 5.8.2

Table 5-9 lists the GPADC channel assignments.

Use Equation 3 to convert from the GPADC code to the internal die temperature using GPADC channels 5 and 6.

$$\text{Die Temperature (°C)} = \frac{\left(\left[\frac{\text{GPADC Code}}{2^{12}}\right] \times 1.25\right) - 0.753\ \text{V}}{2.64\ \text{mV}} \quad (3)$$

Table 5-9. GPADC Channel Assignments

CHANNEL	TYPE	INPUT VOLTAGE FULL RANGE (1)	INPUT VOLTAGE PERFORMANCE RANGE (2)	SCALER	OPERATION
0 (ADCIN1)	External (3)	0 to 1.25 V	0.01 to 1.215 V	No	General purpose
1 (ADCIN2)	External (3)	0 to 1.25 V	0.01 to 1.215 V	No	General purpose
2	Reserved				

(1) The minimum and maximum voltage full range corresponds to typical minimum and maximum output codes (0 and 4095).
(2) The performance voltage is a range where gain error drift, offset drift, INL and DNL parameters are ensured.
(3) If VANALDO is off, maximum current to draw from GPADC_INx is 1 mA for reliability. For current higher than 1 mA, LDOVANA must be in the SLEEP or ACTIVE state.

Copyright © 2015–2019, Texas Instruments Incorporated

Table 5-9. GPADC Channel Assignments (continued)

CHANNEL	TYPE	INPUT VOLTAGE FULL RANGE (1)	INPUT VOLTAGE PERFORMANCE RANGE(2)	SCALER	OPERATION
3 (VCC_SENSE)	Internal	2.5 to 5 V when HIGH_VCC_SENSE = 0 2.3 V to (VCCA – 1 V) when HIGH_VCC_SENSE = 1	2.5 to 4.86 V when HIGH_VCC_SENSE = 0 2.3 V to (VCCA – 1 V) when HIGH_VCC_SENSE = 1	4	System supply voltage (VCC_SENSE)
4	Internal	0 to 1.25 V		No	DC-DC current probe
5	Internal	0 to 1.25 V	0 to 1.215 V	No	PMIC internal die temperature 1
6	Internal	0 to 1.25 V	0 to 1.215 V	No	PMIC internal die temperature 2
7	Internal	0 to VCCA V	0.055 to VCCA V	5	Test network

5.8.1 Asynchronous Conversion Request (SW)

The user can request an asynchronous conversion. This conversion is not critical for start-of-conversion positioning.

The user must select the channel to be converted through the software and then request the conversion through the GPADC_SW_SELECT register. An GPADC_EOC_SW interrupt is generated when the conversion result is ready, and the result is stored in the GPADC_SW_CONV0_LSB and GPADC_SW_CONV0_MSB registers.

CAUTION

A defect in the digital controller of TPS65917-Q1 device may cause an unreliable result from the first asynchronous conversion request after the device exit from a warm reset. Texas Instruments recommends that user rely on subsequent requests to obtain accurate result from the asynchronous conversion after a device warm reset.

For detailed information regarding this issue, see *Guide to Using the GPADC in TPS65903x and TPS6591x Devices* SLIA087.

5.8.2 Periodic Conversion (AUTO)

The user can enable periodic conversions to compare one or two channels with a predefined threshold level. One or two channels can be selected by programming the GPADC_AUTO_SELECT register. The thresholds and polarity of the conversion can be programmable through the GPADC_THRES_CONV0_LSB, GPADC_THRES_CONV0_MSB, GPADC_THRES_CONV1_LSB, and GPADC_THRES_CONV1_MSB registers. In addition, software must select the conversion interval with the GPADC_AUTO_CTRL register and enable the periodic conversion with the AUTO_CONV0_EN and AUTO_CONV1_EN bits.

The GPADC does not need to be enabled separately. The control logic enables and disables the GPADC automatically to save power. The latest conversion result is always stored in the GPADC_AUTO_CONV0_LSB, GPADC_AUTO_CONV0_MSB, GPADC_AUTO_CONV1_LSB, and GPADC_AUTO_CONV1_MSB registers. All selected channels are queued and converted from channel 0 to 7. The first (lower) converted channel result is placed in the GPADC_AUTO_CONV0 register and the second result is placed in the GPADC_AUTO_CONV1 register. Therefore, it is recommended to place the lower channel for conversion in the AUTO_CONV0_SEL bit field of the GPADC_AUTO_SELECT register, and the higher channel for conversion in the AUTO_CONV1_SEL bit field.

Copyright © 2015–2019, Texas Instruments Incorporated

If the conversion result triggers the threshold level, an INT interrupt is generated and the conversion result is stored. If the interrupt is not cleared or the results are not read before another auto-conversion is complete, then the registers store only the latest results, discarding the previous ones. The auto-conversion is never stopped by an uncleared interrupt or unread registers.

Programming the triggering of the threshold level can also generate shutdown. This programming is available independently for the CONV0 and CONV1 channels and is enabled by setting the SHUTDOWN bits in the GPADC_AUTO_CTRL register. During sleep and off modes, only channels 0 to 4 can be converted. For channels 5 and 6, conversion is possible in sleep state if the thermal sensor is not disabled.

5.8.3 Calibration

The GPADC channels are calibrated in the production line using a 2-point calibration method. The channels are measured with two known values (X1 and X2) and the difference (D1 and D2) to the ideal values (Y1 and Y2) are stored in the OTP memory. Figure 5-16 shows the principle of the calibration.

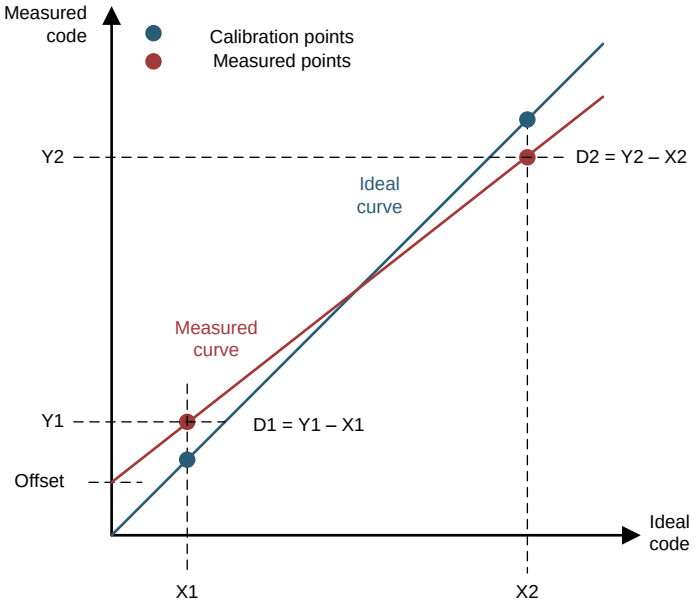

Figure 5-16. ADC Calibration Scheme

Some of the GPADC channels can use the same calibration data. Use Equation 4 and Equation 5 to calculate the corrected result.

Gain:
$$k = 1 + \frac{(D2 - D1)}{(X2 - X1)} \quad (4)$$

Offset:
$$b = D1 - (k - 1) \times X1 \quad (5)$$

If the measured code is *a*, the corrected code *a'* is calculated using Equation 6.

$$a' = \frac{(a - b)}{k} \quad (6)$$

Table 5-10 lists the parameters, X1 and X2, and the register for D1 and D2 required in the calculation for all the channels.

Table 5-10. GPADC Calibration Parameters

CHANNEL	X1	X2	D1	D2	COMMENTS
0, 1	2064 (0.63 V)	3112 (0.95 V)	GPADC_TRIM1	GPADC_TRIM2	

Copyright © 2015–2019, Texas Instruments Incorporated

Table 5-10. GPADC Calibration Parameters (continued)

CHANNEL	X1	X2	D1	D2	COMMENTS
3	2064 (2.52 V)	3112 (3.8 V)	GPADC_TRIM3	GPADC_TRIM4	When HIGH_VCC_SENSE = 0
3	2064 (2.52 V)	3112 (3.8 V)	GPADC_TRIM5	GPADC_TRIM6	When HIGH_VCC_SENSE = 1

5.9 General-Purpose I/Os (GPIO Pins)

The TPS65917-Q1 device integrates seven configurable general-purpose I/Os that are multiplexed with alternative features as listed in Table 5-11

Table 5-11. General Purpose I/Os Multiplexed Functions

PIN	PRIMARY FUNCTION	SECONDARY FUNCTION
GPIO_0	General-purpose I/O Port 0	Input: PWRDOWN (Power down signal)
		Input: ENABLE2 (Peripheral power request input 2)
		Output: REGEN1 (External regulator enable output 4)
GPIO_1	General-purpose I/O Port 1	Input: RESET_IN (Reset input)
		Input: NRESWARM (Warm reset input)
		Input: VBUS_SENSE (VBUS input)
GPIO_2	General-purpose I/O Port 2	Input: ENABLE1 (Peripheral power request input 1)
		Input/Output: I2C2_SDA_SDO (DVS control I^2C serial bidirectional data) or SPI output data signal
GPIO_3	General-purpose I/O Port 3	Input: ENABLE2 (Peripheral power request input 2)
		Output: REGEN1 (External regulator enable output 1)
		Input: SYNCDCDC (SMPS clock synchronization input)
GPIO_4	General-purpose I/O Port 4	Output: REGEN2 (External regulator enable output 2)
		Input/Output: I2C2_SCL_SCE (DVS control I^2C serial clock) or SPI chip-select signal
GPIO_5	General-purpose I/O Port 5	Input: POWERHOLD (Power hold input)
		Output: REGEN3 (External regulator enable output 3)
GPIO_6	General-purpose I/O Port 6	Input: NSLEEP (Sleep mode request signal)
		Output: POWERGOOD (Indicator signal for valid regulator output voltages)
		Output: REGEN3 (External regulator enable output 3)

For GPIOs characteristics, refer to:

- Pin description,
- Electrical characteristics, Section 4.14 and Section 4.15
- Pullup and pulldown characteristics, Section 4.16

Each GPIO event can generate an interrupt on a rising edge, falling edge, or both; each line is individually maskable (as described in Section 5.11). A GPIO-interrupt applies only when the primary function (general-purpose I/O) has been selected.

All GPIOs can be used as wake-up events.

NOTE

GPIO_2 and GPIO_4 are in the VIO domain (only the I/O supply is required to be available) and therefore these GPIOs cannot be used as ON requests from the OFF mode.

The REGEN1 output is muxed in GPIO_0 and GPIO_3, the REGEN2 output is muxed in GPIO_4, and the REGEN3 output is muxed in GPIO_5 and GPIO_6. When the GPO_0, GPIO_3, GPIO_4, GPIO_5, and GPIO_6 pins are configured as REGEN1, REGEN2, or REGEN3, these pins can be programmed as part of the power-up sequence to enable external devices such as external SMPSs. The REGEN1 and REGEN3 signals are at the VRTC voltage level and the REGEN2 signal is at the VIO voltage level.

The PRIMARY_SECONDARY_PAD1 and PRIMARY_SECONDARY_PAD2 registers control selection between primary and secondary functions.

When configured as primary functions, all GPIOs are controlled through the following set of registers:

- GPIO_DAT_DIR: Configures individually each GPIO direction (read and write)
- GPIO_DATA_IN: Data line-in when configured as an input (read only)
- GPIO_DATA_OUT: Data line-out when configured as an output (read and write)
- GPIO_DEBOUNCE_EN: Enables individually each GPIO debouncing (read and write)
- GPIO_CTRL: Global GPIO control to enable and disable all GPIOs (read and write)
- GPIO_CLEAR_DATA_OUT: Clears individually each GPIO data out (write only)
- GPIO_SET_DATA_OUT: Sets individually each GPIO data out (write only)
- PU_PD_GPIO_CTRL1, PU_PD_GPIO_CTRL2: Configures each line pullup and pulldown (read and write)
- OD_OUTPUT_GPIO_CTRL: Enables individual output open drain (read and write)

When configured as secondary functions, none of the GPIO control registers (see Table 5-11) affect GPIO lines. The line configurations (pullup, pulldown, or open drain) for secondary functions are held in a separate register set as well as specific function settings.

5.10 Thermal Monitoring

The TPS65917-Q1 device includes several thermal monitoring functions for internal thermal protection of the PMIC.

The TPS65917-Q1 device integrates two thermal detection modules to monitor the temperature of the die. These modules are placed on opposite sides of the device and close to the LDO and SMPS modules. An over-temperature condition at either module first generates a warning to the system and then, if the temperature continues to rise, a switch-off of the PMIC device can occur before damage to the die.

Two thermal protection levels are available. One of these protections is a hot-die (HD) function which sends an interrupt to software. Software is expected to close any noncritical running tasks to reduce power. The second protection is a thermal shutdown (TS) function which immediately begins device switch-off.

By default, thermal protection is always enabled except in the BACKUP or OFF state. Disabling thermal protection in sleep state is possible for minimum power consumption.

To use thermal monitoring in the system do the following:

- Set the value for the hot-die temperature threshold with the OSC_THERM_CTRL.THERM_HD_SEL[1:0] bits.
- Disable thermal shutdown in sleep state by setting the THERM_OFF_IN_SLEEP bit to 1 in the OSC_THERM_CTRL register.

During operation, if the die temperature increases beyond HD_THR_SEL, an interrupt (INT1.HOTDIE) is sent to the host processor. Immediate action to reduce the PMIC power dissipation by shutting down some functions must occur.

If the die temperature of the PMIC device rises further (above 148°C), an immediate shutdown occurs. Indication of a thermal shutdown event indication is written to the status register, INT1_STATUS_HOTDIE. The system cannot restart until the temperature falls below the HD_THR_SEL threshold.

Copyright © 2015–2019, Texas Instruments Incorporated

5.10.1 Hot-Die Function (HD)

The HD detector monitors the temperature of the die and provides a warning to the host processor through the interrupt system when the temperature reaches a critical value. The threshold value must be set to less than the thermal shutdown threshold. Hysteresis is added to the HD detection to avoid generating multiple interrupts.

The integrated HD function provides the host PM software with an early warning overtemperature condition. This monitoring system is connected to the interrupt controller (INTC) and can send an interrupt when the temperature is higher than the programmed threshold. The TPS65917-Q1 device allows the programming of four junction-temperature thresholds to increase the flexibility of the system: in nominal conditions, the threshold triggering of the interrupt can be set from 117°C to 130°C. The HD hysteresis is 10°C in typical conditions.

When the power-management software triggers an interrupt, immediate action must be taken to reduce the amount of power drawn from the PMIC device (for example, noncritical applications must be closed).

5.10.2 Thermal Shutdown

The thermal shutdown detector monitors the temperature on the die. If the junction reaches a temperature at which damage can occur, a switch-off transition is initiated and a thermal shutdown event is written into a status register.

The system cannot restart until the die temperature falls below the HD threshold.

5.11 Interrupts

Table 5-12 lists the TPS65917-Q1 interrupts.

These interrupts are split into four register groups (INT1, INT2, INT3, and INT4) and each group has three associated control registers which are defined as follows:

INTx_STATUS Reflects which interrupt source has triggered an interrupt event

INTx_MASK Used to mask any source of interrupt, to avoid generating an interrupt on a specified source

INTx_LINE_STATE Reflects the real-time state of each line associated to each source of interrupt

The INT4 register group has two additional registers, INT4_EDGE_DETECT1 and INT4_EDGE_DETECT2, to independently configure rising and falling edge detection (respectively).

All interrupts are logically combined on a single output line, INT (default is active low). The INT line is used as an external interrupt line to warn the host processor of any interrupt event that has occurred within the device. The host processor must read the interrupt status registers (INTx_STATUS) through the control interface (I^2C) to identify the interrupt source. Any interrupt source can be masked by programming the corresponding mask register, INTx_MASK. When an interrupt is masked, the associated event-detection mechanism is disabled. Therefore the corresponding STATUS bit is not updated and the INT line is not triggered if the masked event occurs. If an event occurs while the corresponding interrupt is masked, that event is not recorded. If an interrupt is masked after it has been triggered (the event has occurred and has not been cleared), the STATUS bit would reflect the event until the bit is cleared. While the event is masked, the STATUS bit will not be over-written when a new event occurs.

Because some interrupts are sources of ON requests (see Table 5-12), source masking can mask a specific device switch-on event. Because an active interrupt line, INT, is treated as an ON request, any interrupt that is not masked must be cleared to allow the execution of a sleep sequence of the device, when requested.

The polarity of the INT line and clearing method of interrupts can be configured using the INT_CTRL register.

An INT line can be triggered in either SLEEP or ACTIVE state, depending on the setting of the OSC_THERM_CTRL.INT_MASK_IN_SLEEP bit.

Copyright © 2015–2019, Texas Instruments Incorporated

When a new interrupt occurs while the INT line is still active (not all interrupts are cleared), then the following occurs:

- If the new interrupt source is the same as the one that has already triggered the INT line, the interrupt can be discarded or stored as a pending interrupt depending on the setting of the INT_CTRL.INT_PENDING bit.
  - When the INT_CTRL.INT_PENDING bit is active, then any new interrupt event occurring on the same source (while the INT line is still active) is stored as a pending interrupt. Because only one level of pending interrupts can be stored for a given source, when more than two events occur on the same source, only the last event is stored. While an interrupt is pending, two accesses are required (either read or write) to clear the STATUS bit: one access for the actual interrupt and the other for the pending interrupt. Two consecutive read-write (R/W) operations to the same register clear only one interrupt. Another register must be accessed between the two R/W clear operations.

    For example of a clear-on-read operation, when the INT signal is active, read all four INTx_STATUS registers in sequence to collect the status of all potential interrupt sources. The read access clears the full register for the active or actual interrupt. If the INT line is still active, repeat the read sequence to check and clear pending interrupts.
  - When the INT_CTRL.INT_PENDING bit is inactive (default), then any new interrupt event occurring on the same source (while the INT line is still active) is discarded. Two consecutive R/W operations to the same register only clear one interrupt. Another register must be accessed between the two R/W-to-clear operations.
- If the new interrupt source is different from the one that already triggered the INT line, then the interrupt is stored immediately in the corresponding STATUS bit.

To clear the interrupt line, all status registers must be cleared. The clearing of all status registers occurs by using a clear-on-read or a clear-on-write method. The clearing method is selectable though the INT_CTRL.INT_CLEAR bit. When this bit is set, the clearing method applies to all bits for all interrupts.

The two different clear operations are defined as follows:

Clear-on-read Read operation on a single status register clears all bits for only this specific register (8 bits). Therefore, a read operation of all the four status registers is required to clear all the interrupts requests. When the four read operations are complete, if the INT line is still active then another interrupt event has occurred during the read process. Therefore, the read sequence must be repeated.

Clear-on-write This method is bit-based; setting a specific bit to 1 clears only the written bit. Therefore, to clear a complete status register, write 0xFF. Writing 0xFF to all four status registers is required to clear all the interrupt requests. When the four write operations are complete, if the INT line is still active then another interrupt event has occurred during the write process. Therefore the write sequence must be repeated.

Copyright © 2015–2019, Texas Instruments Incorporated

Table 5-12. Interrupt Sources

INTERRUPT	ASSOCIATED EVENT	EDGES DETECTION	ON REQUEST	REG. GROUP	REG. BIT	DESCRIPTION
VSYS_MON	Internal event	Rising and falling	Never	INT1	6	System voltage monitoring interrupt Triggered when the system voltage crosses the configured threshold in the VSYS_MON register.
HOTDIE	Internal event	Rising and Falling	Never		5	Hot-die temperature interrupt The embedded thermal monitoring module has detected a die temperature above the hot-die detection threshold. An interrupt is generated in ACTIVE and SLEEP states, not in OFF state.
PWRDOWN	PWRDOWN (pin)	Rising and falling	Never		4	Power-down interrupt Triggered when event is detected on the PWRDOWN pin.
LONG_PRESS_KEY	PWRON (pin)	Falling	Never		2	Power-on long key-press interrupt Triggered when PWRON is low during more than the long-press delay, LONG_PRESS_KEY.LPK_TIME.
PWRON	PWRON (pin)	Falling	Always (INT mask, don't care)		1	Power-on interrupt Triggered when the PWRON button is pressed (low) while the device is on. An interrupt is generated in ACTIVE and SLEEP states, not in OFF state.
SHORT	Internal event	Rising	Yes (if INT not masked)	INT2	6	Short interrupt Triggered when at least one of the power resources (SMPS or LDO) outputs is shorted.
FSD	Internal event	Rising	Yes (if INT not masked)		5	First supply detection interrupt Triggered when a first supply detection is detected. This functions is selected by PMU_SECONDARY_INT.FSD_MASK.
RESET_IN	RESET_IN (pin)	Rising	Never		4	RESET_IN interrupt Triggered when event is detected on the RESET_IN pin.
WDT	Internal event	Rising	Never		2	Watchdog time-out interrupt Triggered when watchdog time-out expires.
OTP_ERROR	Internal event	Rising	Never		1	OTP bit error detection interrupt Triggered when an OTP bit error is detected.
VBUS	VBUS (pin)	Rising and falling	Yes (if INT not masked)	INT3	7	VBUS wake-up comparator interrupt Active in OFF state. Triggered when VBUS present.
GPADC_EOC_SW	Internal event	N/A	Yes (if INT not masked)		2	GPADC software end-of-conversion interrupt Triggered when the conversion result is available.
GPADC_AUTO_1	Internal event	N/A	Yes (if INT not masked)		1	GPADC automatic periodic conversion 1 Triggered when the result of a conversion is either above or below (depending on configuration) reference threshold GPADC_AUTO_CONV1_LSB and GPADC_AUTO_CONV1_MSB.
GPADC_AUTO_0	Internal event	N/A	Yes (if INT not masked)		0	GPADC automatic periodic conversion 0 Triggered when the result of a conversion is either above or below (depending on configuration) reference threshold GPADC_AUTO_CONV0_LSB and GPADC_AUTO_CONV0_MSB.
GPIO_6	GPIO_6 (pin)	Rising, falling, or both	Yes (if INT not masked)	INT4	6	GPIO_6 rising-edge detection interrupt, falling-edge detection interrupt, or detection interrupt for both edges
GPIO_5	GPIO_5 (pin)	Rising, falling, or both	Yes (if INT not masked)		5	GPIO_5 rising-edge detection interrupt, falling-edge detection interrupt, or detection interrupt for both edges
GPIO_4	GPIO_4 (pin)	Rising, falling, or both	Yes (if INT not masked)		4	GPIO_4 rising-edge detection interrupt, falling-edge detection interrupt, or detection interrupt for both edges
GPIO_3	GPIO_3 (pin)	Rising, falling, or both	Yes (if INT not masked)		3	GPIO_3 rising-edge detection interrupt, falling-edge detection interrupt, or detection interrupt for both edges
GPIO_2	GPIO_2 (pin)	Rising, falling, or both	Yes (if INT not masked)		2	GPIO_2 rising-edge detection interrupt, falling-edge detection interrupt, or detection interrupt for both edges
GPIO_1	GPIO_1 (pin)	Rising, falling, or both	Yes (if INT not masked)		1	GPIO_1 rising-edge detection interrupt, falling-edge detection interrupt, or detection interrupt for both edges
GPIO_0	GPIO_0 (pin)	Rising, falling, or both	Yes (if INT not masked)		0	GPIO_0 rising-edge detection interrupt, falling-edge detection interrupt, or detection interrupt for both edges

Copyright © 2015–2019, Texas Instruments Incorporated

5.12 Control Interfaces

The TPS65917-Q1 device has two, exclusive selectable (from factory settings) interfaces; 2 high-speed I^2C interfaces (I2C1_SCL_SCK or I2C1_SDA_SDI and I2C2_SCL_SCE or I2C2_SDA_SDO) or 1 SPI (I2C1_SCL_SCK, I2C1_SDA_SDI, I2C2_SDA_SDO, or I2C2_SCL_SCE). Both are used to fully control and configure the device and have access to all the registers. When the I^2C configuration is selected (either I2C1_SCL_SCK or I2C1_SDA_SDI) a general purpose control (GPC) interface is dedicated to configure the device and the I2C2_SCL_SCE or I2C2_SDA_SDO interface, dynamic voltage scaling (DVS) is dedicated to dynamically change the output voltage of the SMPS converters. The DVS I^2C interface has access only to the voltage scaling registers of the SMPS converters (R/W mode).

5.12.1 I^2C Interfaces

The GPC I^2C interface (I2C1_SCL_SCK and I2C1_SDA_SDI) is dedicated to access the configuration registers of all the resources of the system.

The DVS I^2C interface (I2C2_SCL_SCE and I2C_SDA_SDO) is dedicated to access the DVS registers independently from the GPC I^2C.

The control interfaces comply with the HS-I^2C specification and support the following features:

- Mode: Slave only (receiver and transmitter)
- Speed:
  - Standard mode (100 kbps)
  - Fast mode (400 kbps)
  - High-speed mode (3.4 Mbps)
- Addressing: 7-bit mode addressing device

The following features are not supported:

- 10-bit addressing
- General call
- Master mode (bus arbitration and clock generation)

I^2C is a 2-wire serial interface developed by NXP (formerly Philips Semiconductor) (see *I^2C-Bus Specification and user manual, Rev 03, June 2007*). The bus consists of a data line (SDA) and a clock line (SCL) with pullup structures. When the bus is idle, the SDA and SCL lines are pulled high. All the I^2C-compatible devices connect to the I^2C bus through open-drain I/O pins, SDA and SCL. A master device, usually a microcontroller or a digital signal processor, controls the bus. The master is responsible for generating the SCL signal and device addresses. The master also generates specific conditions that indicate the start and stop of data transfers. A slave device receives data, transmits data, or both on the bus under control of the master device. The data transfer protocol for standard and fast modes is exactly the same. In this data sheet, these modes are referred to as F/S mode. The protocol for high-speed (HS) mode is different from F/S mode.

5.12.1.1 I^2C Implementation

The TPS65917-Q1 standard I^2C 7-bit slave device address is set to 010010xx (binary) where the two least-significant bits are used for page selection.

The device is organized in five internal pages of 256 bytes (registers) as follows:

- Slave device address 0x48: Power registers
- Slave device address 0x49: Interfaces and auxiliaries
- Slave device address 0x4A: Trimming and test
- Slave device address 0x4B: OTP
- Slave device address 0x12: DVS

The device address for the DVS I^2C interface is set to 0x12.

Copyright © 2015–2019, Texas Instruments Incorporated

If one of the addresses conflicts with another device I^2C address, remapping each address to a fixed alternative address is possible as listed in Table 5-13. The I^2C for DVS is fixed because it is a dedicated interface.

Table 5-13. I^2C Address Configuration

REGISTER	BIT	PAGE	ADDRESSES
I2C_SPI	ID_I2C1[0]	Power registers	ID_I2C1[0] = 0: 0x48
			ID_I2C1[0] = 1: 0x58
	ID_I2C1[1]	Interfaces and auxiliaries	ID_I2C1[1] = 0: 0x49
			ID_I2C1[1] = 1: 0x59
	ID_I2C1[2]	Trimming and test	ID_I2C1[2] = 0: 0x4A
			ID_I2C1[2] = 1: 0x5A
	ID_I2C1[3]	OTP	ID_I2C1[3] = 0: 0x4B
			ID_I2C1[3] = 1: 0x5B
	ID_IDC2	DVS	ID_I2C2 = 0: 0x12

5.12.1.2 F/S Mode Protocol

The master initiates a data transfer by generating a START condition. The START condition is when a high-to-low transition occurs on the SDA line while SCL is high (see Figure 5-17). All I^2C-compatible devices should recognize a START condition.

The master then generates SCL pulses and transmits the 7-bit address and the read or write direction bit (R/W) on the SDA line. During all transmissions, the master ensures that data is valid. A valid data condition requires the SDA line to be stable during the entire high period of the clock pulse (see Figure 5-18). All devices recognize the address sent by the master and compare it to the internal fixed addresses of the respective device. Only the slave device with a matching address generates an acknowledge signal (see Figure 5-19) by pulling the SDA line low during the entire high period of the ninth SCL cycle. When this acknowledge signal is detected, the communication link between the master and the slave device has been established.

The master generates further SCL cycles to either transmit data to the slave (R/W bit 1) or receive data from the slave (R/W bit 0). In either case, the receiver must acknowledge the data sent by the transmitter. An acknowledge signal can be generated by the master or the slave, depending on which device is the receiver. Nine-bit valid data sequences consisting of 8-bit data and 1-bit acknowledge can continue for as long as required.

To signal the end of the data transfer, the master generates a STOP condition by pulling the SDA line from low to high while the SCL line is high (see Figure 5-17). Pulling the line from low to high while SCL is high releases the bus and stops the communication link with the addressed slave. All I^2C-compatible devices must recognize the STOP condition. Upon the receipt of a STOP condition, the slave device must wait for a START condition followed by a matching address.

Attempting to read data from the register addresses not listed in this section results in a read out of 0xFF.

5.12.1.3 HS Mode Protocol

When the bus is idle, the SDA and SCL lines are pulled high by the pullup devices.

The master generates a START condition followed by a valid serial byte containing the HS master code, 00001XXX. This transmission is made in F/S mode at no more than 400 kbps. No device is allowed to acknowledge the HS master code, but all devices must recognize it and switch the internal setting to support 3.4-Mbps operation.

Copyright © 2015–2019, Texas Instruments Incorporated

The master then generates a REPEATED START condition (a REPEATED START condition has the same timing as the START condition). After the REPEATED START condition, the protocol is the same as F/S mode, except that transmission speeds up to 3.4 Mbps are allowed. A STOP condition ends the HS mode and switches all the internal settings of the slave devices to support F/S mode. Instead of using a STOP condition, REPEATED START conditions are used to secure the bus in HS mode.

Attempting to read data from register addresses not listed in this section results in a read out of 0xFF.

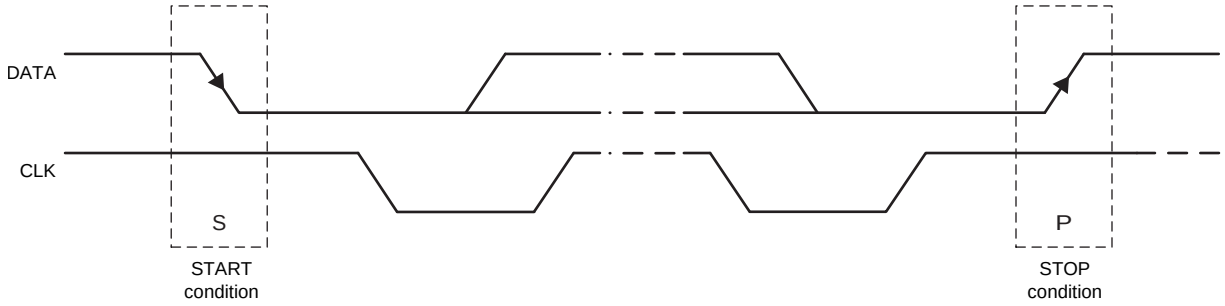

Figure 5-17. START and STOP Conditions

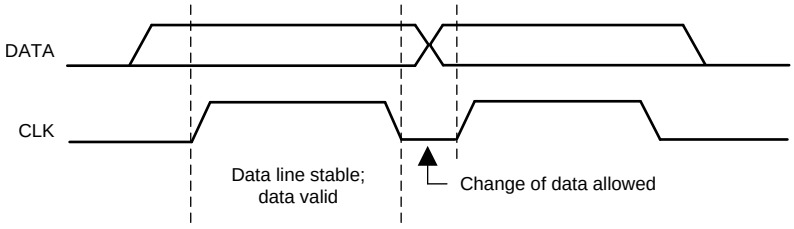

Figure 5-18. Bit Transfer on the Serial Interface

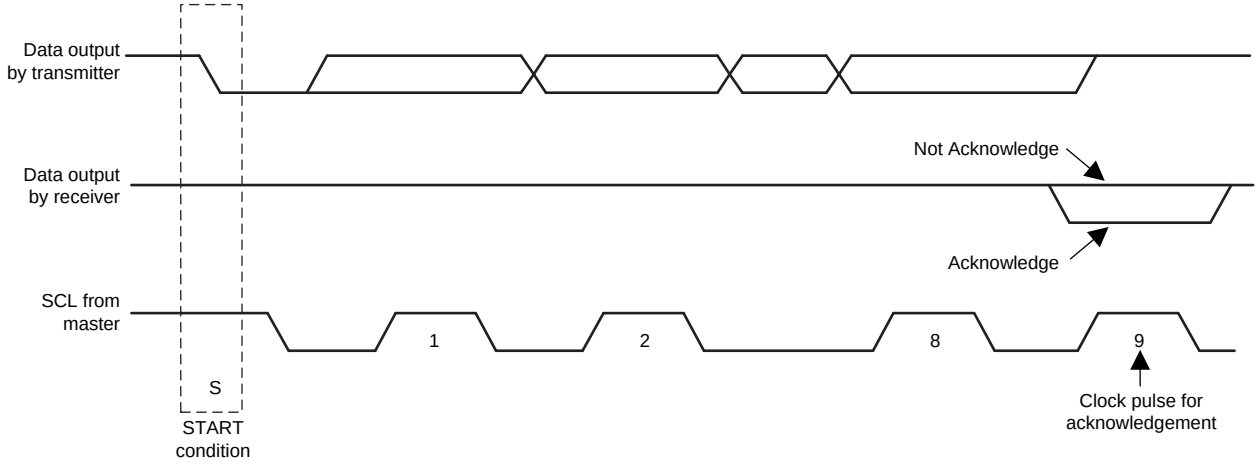

Figure 5-19. Acknowledge on the I^2C Bus

Copyright © 2015–2019, Texas Instruments Incorporated

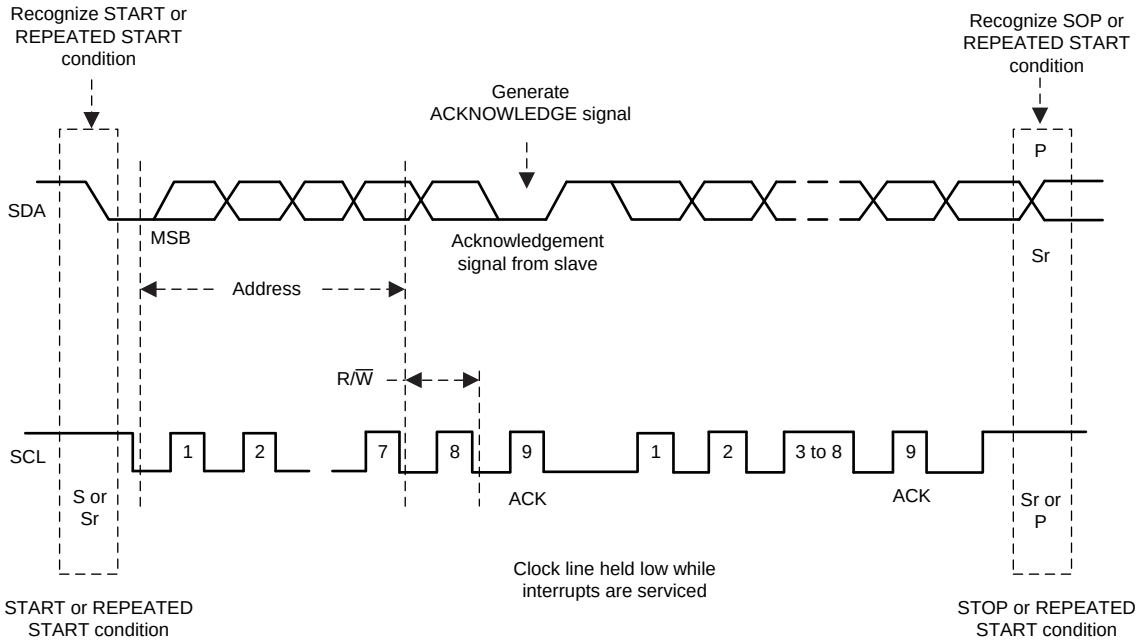

Figure 5-20. Bus Protocol

5.12.2 Serial Peripheral Interface (SPI)

The SPI is a 4-wire slave interface used to access and configure the device. The SPI allows read-and-write access to the configuration registers of all resources of the system.

The SPI uses the following signals:

- SCE (I2C2_SCL_SCE): Chip enable which is the input driven by host master. This signal is used to initiate and terminate a transaction
- SCK (I2C1_SCL_SCK): Clock which is the input driven by host master. This signal is as master clock for data transaction
- SDI (I2C1_SDA_SDI): Data input which is the input driven by host master. This signal is as data line from master to slave
- SDO (I2C2_SDA_SDO): Data output which is the output driven by TPS65917-Q1. This signal is as data line from slave to master and defaults to high impedance

5.12.2.1 SPI Modes

This SPI supports two access modes which are single access and burst access. All shifts occur with the most significant bit (MSB) first (data, address, page). These two access modes have the following features:

- Single access (read or write)
  - This mode consists of fetching and storing one single data location. The protocol is shown in Figure 5-21.
  - The R/W bit is always provided first, followed by page address and register address fields. When the R/W bit = 0, a read access is performed. When the R/W bit = 1, a write access is performed.
  - One burst bit indicates if the following transfer is a single access (BURST = 0) or a burst access (BURST = 1).
  - Four unused bits follow the burst bit and the 8-bit data is finally either shifted in (write) or out (read).
  - For a write access, the data output line SDO is invalid (useless) during the whole transaction.
  - For a read access, the data output line SDO is invalid during the unused bits (time slot used for data fetch) and then becomes active or valid after the unused bits.

Copyright © 2015–2019, Texas Instruments Incorporated

- Burst access (read or write)
  - This mode consists of fetching and storing several data at contiguous locations. The protocol is shown in Figure 5-22.
  - The R/W bit is always provided first, followed by page address and register address fields. When the R/W bit 0, a read access is performed. When the R/W bit 1, a write access is performed.
  - One burst bit indicates if the following transfer is a single access (BURST = 0) or a burst access (BURST = 1).
  - Four unused bits follow the burst bit and packets of 8-bit data are finally either shifted in (write) or out (read).
  - The transaction remains active as long as the SCE signal is maintained high by the host.
  - The address is automatically incremented internally for each new 8-bit packet received.
  - The host must pull the SCE signal low after a complete 8-bit data is transferred, otherwise the last transaction is discarded.
  - For a write access, the data output line SDO is invalid (useless) during the whole transaction.
  - For a read access, the data output line SDO is invalid during the unused bits (time slot used for data fetch) and then becomes active or valid after the unused bits.

5.12.2.2 SPI Protocol

Figure 5-21 shows the SPI protocol for a single read and write access. Figure 5-22 shows the SPI protocol for a burst read and write access.

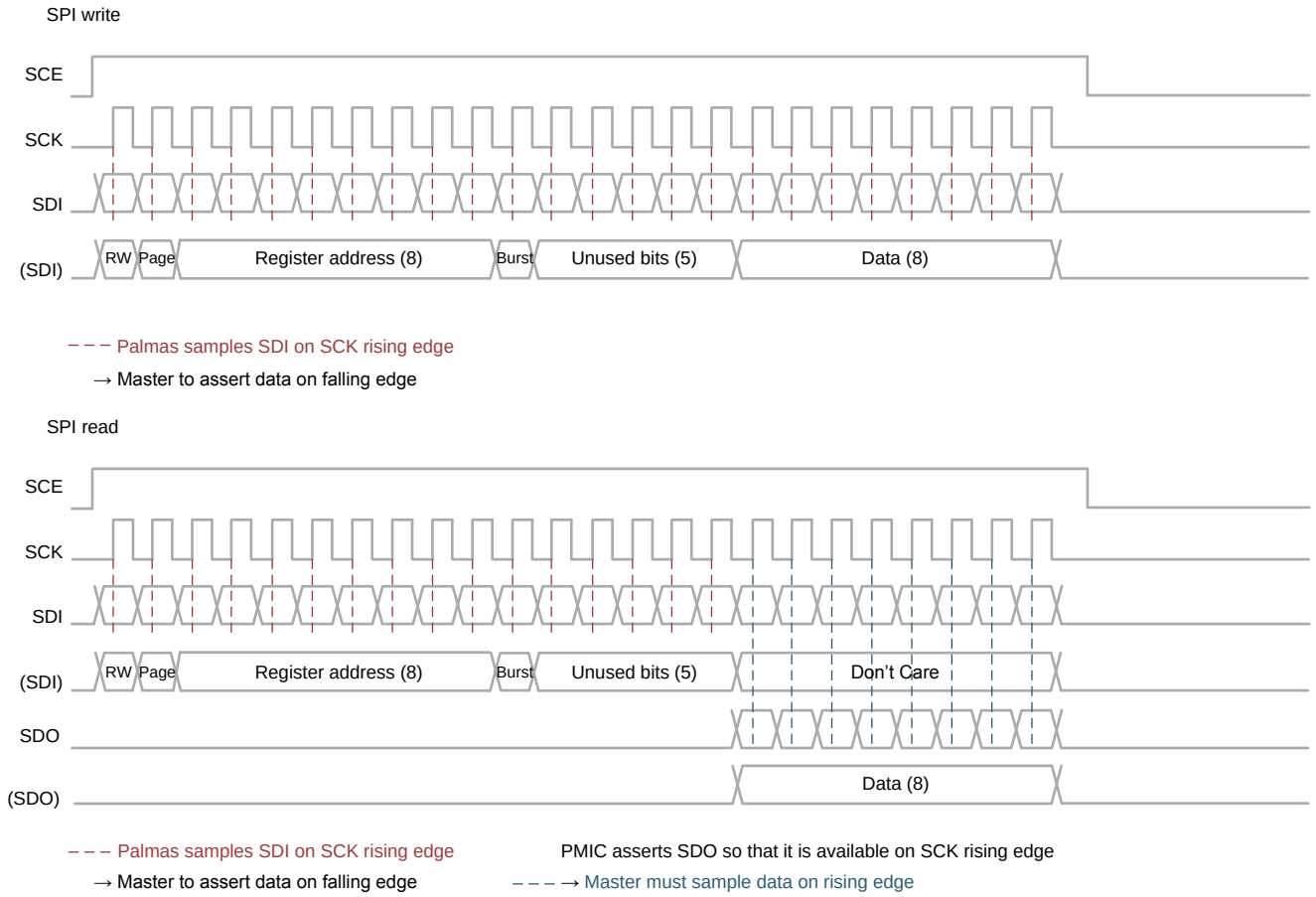

Figure 5-21. SPI Single Read and Write Access

Copyright © 2015–2019, Texas Instruments Incorporated

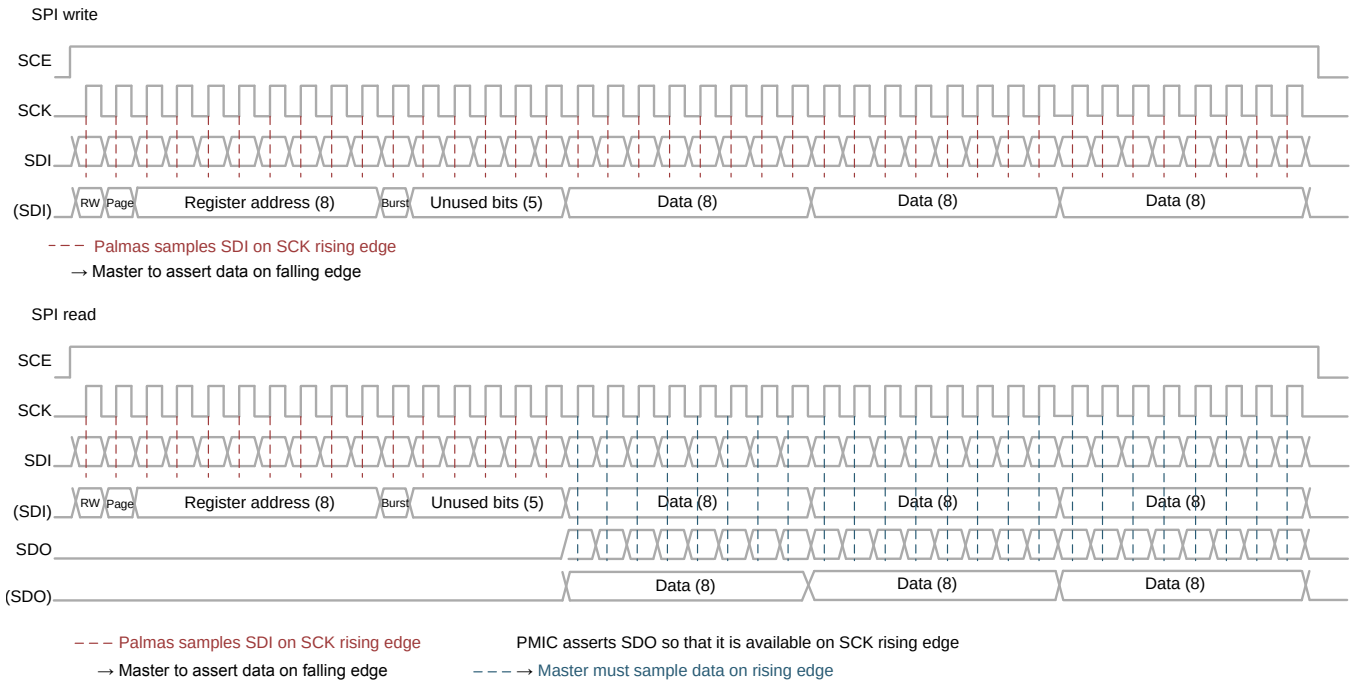

Figure 5-22. SPI Burst Read and Write Access

5.13 OTP Configuration Memory

The register mapping for the device describes the OTP configuration bits. These bits are highlighted as the value *X* during reset in the register mapping (the value of the bit is the copy of the OTP configuration memory).

5.14 Watchdog Timer (WDT)

The watchdog timer has two modes of operation: periodic mode and interrupt mode.

In periodic mode, an interrupt is generated with a regular period *N*, defined by the setting of WATCHDOG.TIMER. This interrupt is generated at the beginning of the period (when the watchdog internal counter equals 1). The IC initiates a shutdown at the end of the period (when the internal counter reaches N) only if the interrupt is not cleared within the defined time frame (0 to N). In this mode, when the interrupt is cleared, the internal counter is not reset. The counter continues counting until it reaches the maximum value (defined by the TIMER setting) and automatically rolls over to 0 to start a new counting period. Regardless of when the interrupt is cleared within a given period (N), the next interrupt is generated only when the ongoing period completes (reaches N). The internal watchdog counter is initialized and kept at 0 as long as the RESET_OUT pin is low. The watchdog counter begins counting when the RESET_OUT pin is released.

In interrupt mode, any interrupt source resets the watchdog counter and starts the counting. If the sources of the interrupts are not cleared (meaning the INT line is released) before the end of the predefined period, N (set by WATCHDOG.TIMER setting), then the device initiates a shutdown. If the sources of the interrupts are cleared within the predefined period, then the watchdog counter is discarded (dc) and no shutdown sequence is initiated.

By default, the watchdog is disabled. The watchdog can be enabled by setting the ENABLE bit of the WATCHDOG register to 1, and this selection is write protected by setting the LOCK bit to 1. Reset of the device returns these bits to default values.

Figure 5-23 and Figure 5-24 show the watchdog timings.

Copyright © 2015–2019, Texas Instruments Incorporated

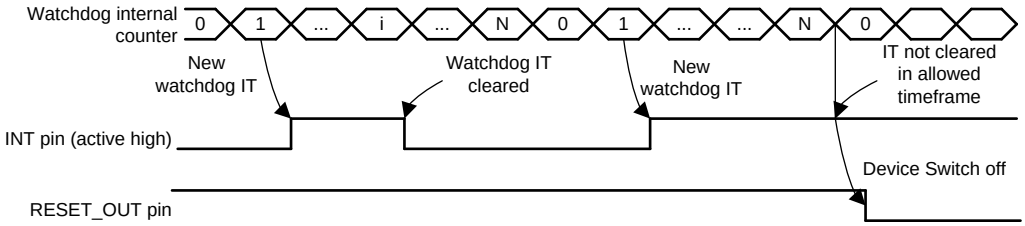

Figure 5-23. Watchdog Timings—Periodic Mode

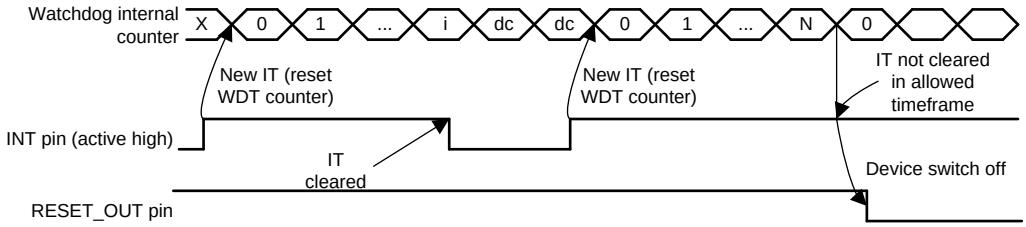

Figure 5-24. Watchdog Timings—Interrupt Mode

5.15 System Voltage Monitoring

Comparators that monitor the voltage on the VCC_SENSE, and VCCA pins control the power state machine of the TPS65917-Q1 device. For electrical parameters, see Section 4.12.

POR When the supply at the VCCA pin is below the POR threshold, the TPS65917-Q1 device is in the NO SUPPLY state. All functionality is off. The device moves from the NO SUPPLY state to the BACKUP state when the voltage in VCCA rises above the POR threshold.

VSYS_LO When the voltage on the VCCA pin rises above VSYS_LO, the device enters from the BACKUP state to the OFF state. When the device is in an ACTIVE, SLEEP, or OFF state and the voltage on VCCA decreases below the VSYS_LO level, the device enters backup mode. When the device transitions from the ACTIVE state to the BACKUP state, all active SMPS and LDO regulators, except LDOVRTC, are disabled simultaneously. There is a 180-µs deglitch time after VCCA becomes less than VSYS_LO and before the regulators are disabled. The level of VSYS_LO is OTP programmable.

VSYS_MON During power up, the value of VSYS_HI OTP is used as a threshold for the VSYS_MON comparator which is gating PMIC start-up (that is, as a threshold for transition from the OFF state to the ACTIVE state). The VSYS_MON comparator monitors the VCC_SENSE pin. After power up, software can configure the comparator threshold in the VSYS_MON register.

VBUS_DET The VBUS_DET comparator is monitoring the VBUS_SENSE (secondary function of GPIO1) pin. This comparator is active when VCCA is greater than the POR threshold. Triggering the threshold level generates an interrupt. It can wake up the device from the SLEEP state, but can also switch on the device from the OFF state.

Figure 5-25 shows a block diagram of the system comparators and Figure 5-26 shows the state transitions.

Copyright © 2015–2019, Texas Instruments Incorporated

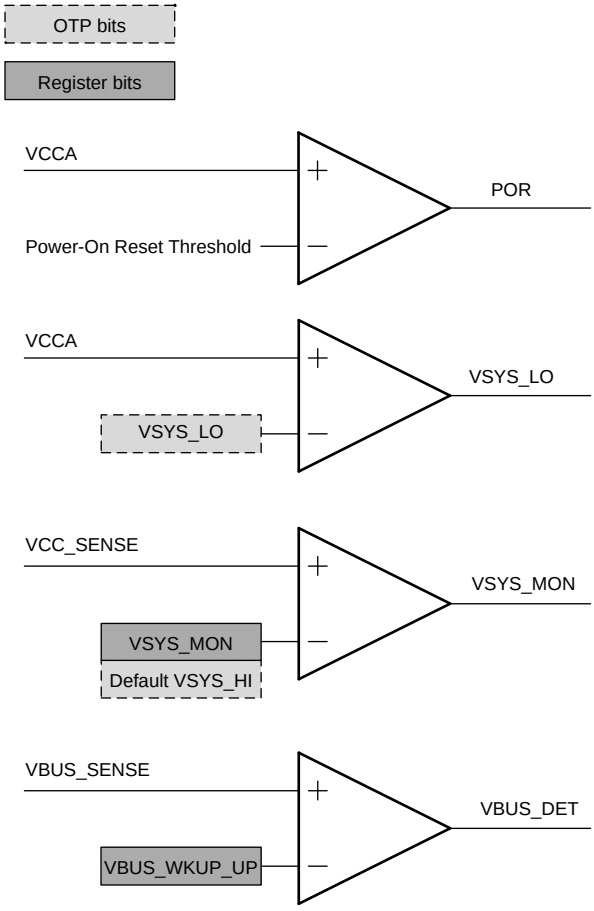

Figure 5-25. System Comparators

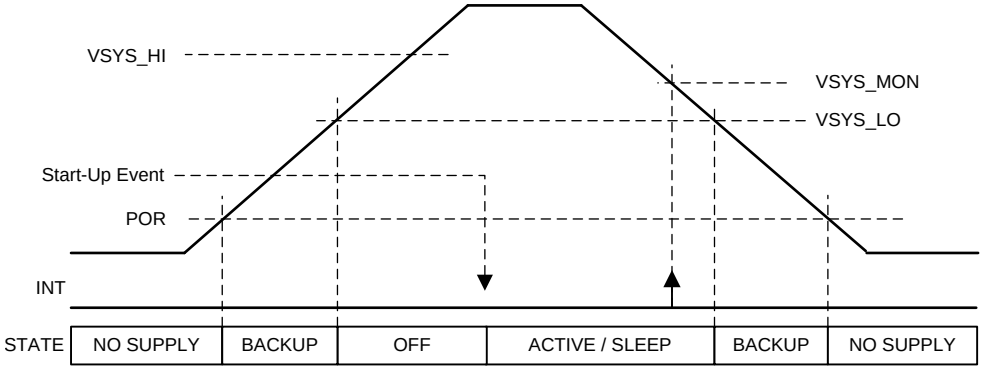

Figure 5-26. State Transitions

NOTE

To generate a POR from a falling V_{CC}, V_{CC} is sampled every 1 ms and compared to the POR threshold. In case VCC is discharged and resupplied quickly, a POR may not be reliably generated if VCC crosses the POR threshold between samples. Another way to generate POR is to discharge the LDOVRTC regulator to 0 V after VCC is removed. With no external load, this could take seconds for the LDOVRTC output to discharge to 0 V. The PMIC should not be restarted after VCC is removed but before LDOVRTC is discharged to 0 V. If necessary, TI recommends adding a pulldown resistor from the LDOVRTC output to GND with a minimum of 3.9 kΩ to speed up the LDOVRTC discharge time.

Copyright © 2015–2019, Texas Instruments Incorporated

The value of the pulldown resistor should be chosen based on the desired discharge time and acceptable current draw in the OFF state, but no greater than 0.5 mA. Use Equation 7 to calculate the pulldown resistor based on the desired discharge time.

$$R_{PD}\ (k\Omega) = \frac{t_{discharge}\ (ms)}{C_O\ (\mu F) \times 3}$$

where

- $t_{discharge}$ = discharge time of the VRTC output
- R_{PD} = pulldown resistance from the VRTC output to GND
- C_O = output capacitance on the VRTC line (typically 2.2 µF) (7)

Because LDOVRTC is always on when VCC is supplied, additional current is drawn through the pulldown resistor. The output current of LDOVRTC while the PMIC is in OFF state should not exceed 0.5 mA. Use Equation 8 to calculate the pulldown current.

$$I_{PD} = \frac{1.8\ V}{R_{PD}}$$

where

- I_{PD} = current through the pulldown resistor
- R_{PD} = pulldown resistance from the VRTC regulator (8)

To use comparators in the system:

- The VSYS_HI and VSYS_LO thresholds are defined in the OTP. Software cannot change these levels.
- After startup, the VSYS_MON comparator is automatically disabled. Software can select new threshold levels using the VSYS_MON register and then enable the comparators.
- To have the same coding for rising and falling edge, the VSYS_MON comparator does not include hysteresis and thus can generate multiple interrupts when the voltage level is at threshold level. New interrupt generation has a 125-µs debounce time. This time lets software mask the interrupt and update the threshold level or disable the comparator before receiving a new interrupt.

Figure 5-27 shows more details on VSYS_MON comparator. When the VSYS_MON comparator is enabled, and the internal buffer is bypassed, the input impedance at VCC_SENSE pin is 500 kΩ (typical). When the comparator is disabled, the VCC_SENSE pin is in the high-impedance state. If GPADC is enabled to measure channel 2 or channel 3, 40 kΩ is added in parallel to the corresponding comparator. See Table 5-9 for GPADC input range.

To enable system voltage sensing above 5.25 V, an external resistive divider can be used. Internal buffers can be enabled by setting the OTP bit HIGH_VCC_SENSE to 1 to provide high impedance for the external resistive dividers. The maximum input level for the internal buffer is VCCA – 1 V.

Copyright © 2015–2019, Texas Instruments Incorporated

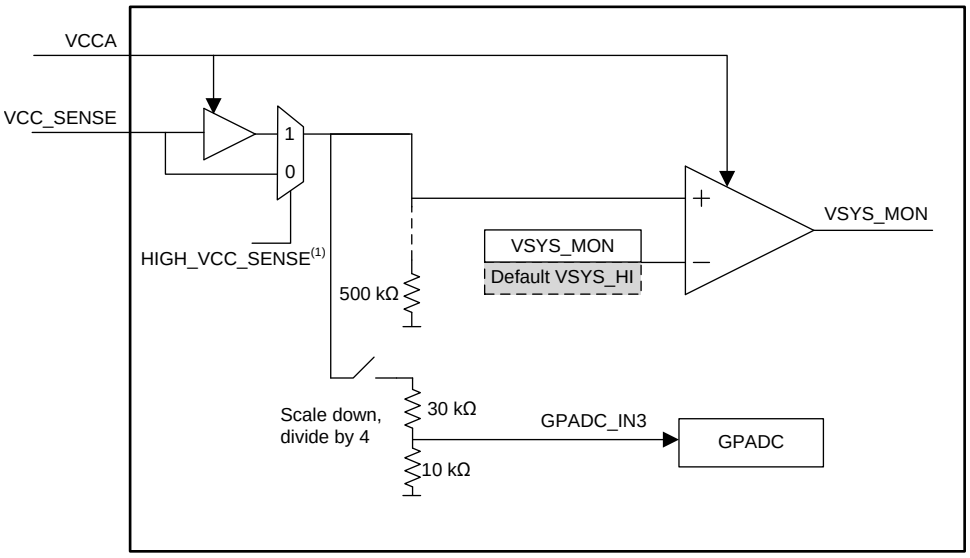

(1) **HIGH_VCC_SENSE = 0:** buffer bypassed (not enabled). **HIGH_VCC_SENSE = 1:** buffer enabled, bypass disabled (Hi-Z at SENSE input)

Figure 5-27. VSYS_MON Comparator Details

5.16 Register Map

5.16.1 Functional Register Mapping

For the register descriptions, refer to the *TPS65917-Q1 Register Map*.

5.17 Device Identification

The following registers can differentiate the TPS65917-Q1 device being used.

Table 5-14. TPS65917-Q1 Device ID

REGISTER NAME	REGISTER DESCRIPTION		VALUE
PRODUCT_ID_MSB	For all TPS65917-Q1 devices, this register will have the same value.		0x09
PRODUCT_ID_LSB	For all TPS65917-Q1 devices, this register will have the same value.		0x17
DESIGNREV	This register distinguishes which silicon version is used.	Revision 1.0	0x0
		Revision 1.1	0x1
SW_REVISION	This register will be representative of the OTP version programmed on the device.		OTP dependent - See User's Guide

Copyright © 2015–2019, Texas Instruments Incorporated

6 Applications, Implementation, and Layout

NOTE

Information in the following applications sections is not part of the TI component specification, and TI does not warrant its accuracy or completeness. TI's customers are responsible for determining suitability of components for their purposes. Customers should validate and test their design implementation to confirm system functionality.

6.1 Application Information

The TPS65917-Q1 device is an integrated power management integrated circuits (PMIC), available in a 48-pin, 0.5-mm pitch, 7-mm × 7-mm QFN package. It is designed specifically for automotive applications. It has five configurable step-down converter rails, with two of these SMPSs capable of combining power rails and supply up to 7 A of output current in multi-phase mode. These step-down converters can be synchronized to an external clock between 1.7 MHz to 2.7 MHz, or an internal fallback clock at 2.2 MHz. The TPS65917-Q1 device also has five external LDOs which can be supplied from the system supply or a pre-regulated supply. Two of these LDOs can be configured in bypass mode. One of the five LDOs also provides low noise output.

The TPS65917-Q1 device also come with a 12-bit GPADC with two external channels, seven configurable GPIOs, two I^2C interface channels or one SPI interface channel, a PLL for external clock sync and phase delay capability, and a programmable power sequencer and control for supporting different processors and applications.

As TPS65917-Q1 device is a highly integrated PMIC device, it is very important that customers should take necessary actions to ensure the PMIC is operating under the recommended operating conditions to ensure desired performance from the device. Additional cooling strategies may be necessary to maintain the junction temperature below maximum limit allowed for the device. To minimize the interferences when turning on a power rail while the device is in operation, optimal PCB layout and grounding strategy are essential and are recommended in Section 6.3. In addition, customer may take steps such as turning on additional rails only when the systems is operating in light load condition.

Details on how to use this device as a power management device for a application processor are described throughout this device specification. The following sections provides the typical application use case with the recommended external components and layout guidelines. A design checklist for the TPS65917-Q1 device is also available on which provides application design guidance and cross checks.

Copyright © 2015–2019, Texas Instruments Incorporated

6.2 Typical Application

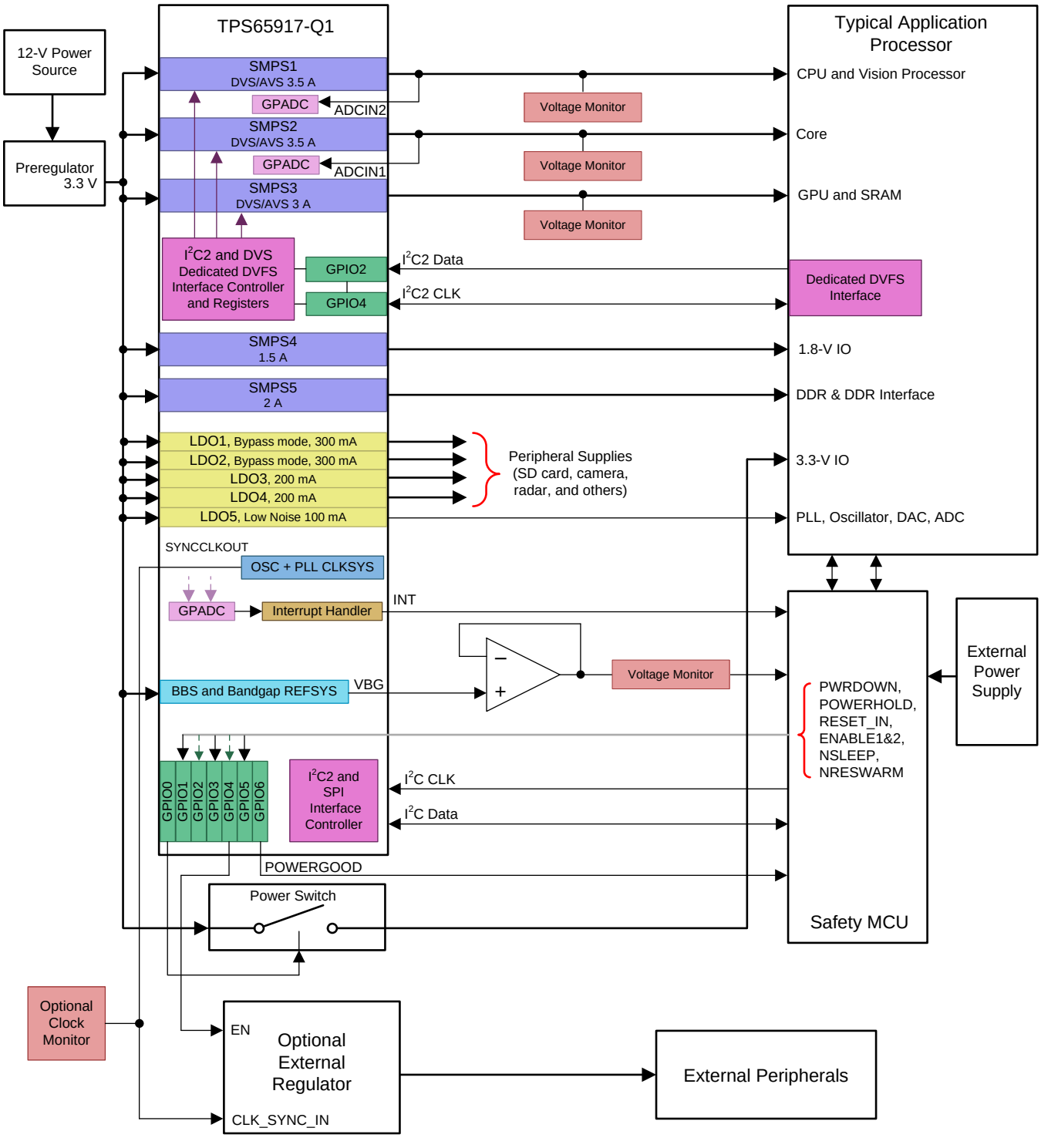

Copyright © 2017, Texas Instruments Incorporated

Figure 6-1. Application Diagram in a Typical ADAS System

6.2.1 Design Requirements

For a typical ADAS application shown in Figure 6-1, Table 6-1 lists the key design parameters of the power resources.

Table 6-1. Design Parameters

DESIGN PARAMETER	VALUE
Supply voltage	3.3 V to 5 V
Switching frequency	2.2 MHz
SMPS1 voltage	1.15 V
SMPS1 current	Up to 3.5 A
SMPS2 voltage	1.15 V
SMPS2 current	Up to 3.5 A
SMPS3 voltage	1.06 V
SMPS3 current	Up to 3 A
SMPS4 voltage	1.8 V
SMPS4 current	Up to 1.5 A
SMPS5 voltage	1.35 V or 1.5 V
SMPS5 current	Up to 2 A
LDO1 voltage	1.8 V or 3.3 V
LDO1 current	Up to 300 mA
LDO2 voltage	1.8 V
LDO2 current	Up to 300 mA
LDO3 voltage	1.8 V
LDO3 current	Up to 200 mA
LDO4 voltage	3.3 V
LDO4 current	Up to 200 mA
LDO5 voltage	1.8 V
LDO5 current	Up to 100 mA

Copyright © 2015–2019, Texas Instruments Incorporated

6.2.2 Detailed Design Procedure

Table 6-2 lists the recommended external components.

Table 6-2. Recommended External Components

REFERENCE COMPONENTS	COMPONENT(1)	MANUFACTURER	PART NUMBER	VALUE	EIA size code(2)	SIZE (mm)	MASS PRODUCTION(3)
INPUT POWER SUPPLIES EXTERNAL COMPONENTS							
C1, C2	VSYS and VCCA tank capacitor(4)	Murata	GCM21BR70J106KE22	10 µF, 6V3	0805	2 × 1.25 × 1.25	Available(5)
C3	Decoupling capacitor	Murata	GCM155R71C104KA55	100 nF, 16 V	0402	1 × 0.5 × 0.5	Available(5)
BANDGAP EXTERNAL COMPONENTS							
C7	Capacitor	Murata	GCM155R71C104KA55	100 nF, 16 V	0402	1 × 0.5 × 0.5	Available (5)
SMPS EXTERNAL COMPONENTS							
C8, C9, C10, C11, C12	Input capacitor	Murata	GCM21BC71A475MA735	4.7 µF 10 V	0805	2 × 1.25 × 1.25	Available (5)
C13, C14, C15, C16, C17	Output capacitor	Murata	GCM32ER70J476KE19	47 uF 10 V	1210	3.2 × 2.5 × 2.5	Available(5)
L1, L2, L3, L4, L5	Inductor	VISHAY	IHLP1616ABER1R0M11	1 µH		4.45 × 4.1 × 1.2	Available(5)
LDO EXTERNAL COMPONENTS							
C18, C19	Input capacitor	Murata	GCM188R70J225KE22	2.2 µF 6V3	0603	1.6 × 0.8 × 0.8	Available(5)
C4, C5, C20, C21, C22, C23, C24	Output capacitor	Murata	GCM188R70J225KE22	2.2 µF 6V3	0603	1.6 × 0.8 × 0.8	Available(5)

(1) Component minimum and maximum tolerance values are specified in the electrical parameters section of each IP.
(2) The PACK column describes the external component package type.
(3) This column refers to the criteria.
(4) The tank capacitors filter the VSYS and VCCA input voltage of the LDO and SMPS core architectures.
(5) Component used on the validation boards.

Copyright © 2015–2019, Texas Instruments Incorporated

6.2.2.1 SMPS Input Capacitors

All SMPS inputs require an input decoupling capacitor to minimize input ripple voltage. Using a 10-V, 4.7-µF capacitor for each SMPS is recommended. Depending on the input voltage of the SMPS, a 6.3-V or 10-V capacitor can be used. See Table 6-2 for the specific part number of the recommended input capacitor.

For optimal performance, the input capacitors should be placed as close to the SMPS input pins as possible. See the Section 6.3.1 section for more information about component placement.

6.2.2.2 SMPS Output Capacitors

All SMPS outputs require an output capacitor to hold up the output voltage during a load step or changes to the input voltage. To ensure stability across the entire switching frequency range, the TPS65917-Q1 device requires an output capacitance value between 33 µF and 57 µF. To meet this requirement across temperature and DC bias voltage, using a 47-µF capacitor for each SMPS is recommended. Remember that each SMPS requires an output capacitor, not just each output rail. For example, SMPS12 is a dual-phase regulator and an output capacitor is required for the SMPS1 output and the SMPS2 output. Note, this requirement excludes any capacitance seen at the load and only refers to the capacitance seen close to the device. Additional capacitance placed near the load can be supported, but the end application or system should be evaluated for stability. See Table 6-2 for the specific part number of the recommended output capacitor.

6.2.2.3 SMPS Inductors

Again, to ensure stability across the entire switching frequency range, using a 1-µH inductor on each SMPS is recommended. Remember that each SMPS requires an inductor, not just each output rail. For example, SMPS12 is a dual-phase regulator and an inductor is required for the SMPS1_SW pins and the SMPS2_SW pins. See Table 6-2 for the specific part number of the recommended inductor.

6.2.2.4 LDO Input Capacitors

All LDO inputs require an input decoupling capacitor to minimize input ripple voltage. Using a 2.2-µF capacitor for each LDO is recommended. Depending on the input voltage of the LDO, a 6.3-V or 10-V capacitor can be used. See Table 6-2 for the specific part number of the recommended input capacitors.

For optimal performance, the input capacitors should be placed as close to the LDO input pins as possible. See the Section 6.3.1 section for more information about component placement.

6.2.2.5 LDO Output Capacitors

All LDO outputs require an output capacitor to hold up the output voltage during a load step or changes to the input voltage. Using a 2.2-µF capacitor for each LDO output is recommended. Note, this requirement excludes any capacitance seen at the load and only refers to the capacitance seen close to the device. Additional capacitance placed near the load can be supported, but the end application or system should be evaluated for stability. See Table 6-2 for the specific part number of the recommended output capacitors.

6.2.2.6 VCCA

VCCA is the supply for the analog input voltage of the device. This pin requires a 10-µF decoupling capacitor.

Texas Instruments recommends to always power down the TPS65917-Q1 before removing power from VCCA. If the input voltage to the device is removed while the device is ACTIVE, the device will shut off when VCCA reaches the VSYS_LO threshold. As mentioned in the Section 5.15 section, once VCCA reaches VSYS_LO, there is about 180 us delay before all the output rails are disabled simultaneously.

There are two scenarios to consider in the system-level design in the event of unexpected loss of power.

Copyright © 2015–2019, Texas Instruments Incorporated

6.2.2.6.1 Meeting the Power-Down Sequence

To prevent a sequencing violation, it is important to block reverse current and implement a disable signal to the PMIC. A Schottky diode can block reverse current when the input is removed. Additionally, capacitors can help maintain the input voltage level while the power-down sequence occurs. Depending on the system design, there are a couple ways to implement a disable signal.

For a system where the TPS65917-Q1 is powered by the system input voltage, a supervisor can be used to create a logic signal, indicating if the power is at a good level. An example of this solution is shown in Figure 6-2.

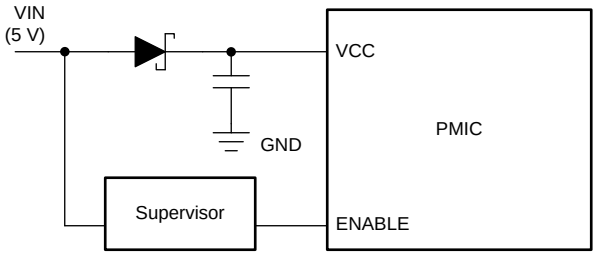

Figure 6-2. Supporting Uncontrolled Power Down When the PMIC is Supplied by the System Input Voltage

An alternative solution is possible when a pre-regulator is present. In the case of the pre-regulator, the pre-regulator output capacitance can also act as the energy storage to maintain VCCA for the necessary time. The total supply capacitance should be calculated to support the worst-case leakage current during power down so that the voltage is maintained until the power-down sequence completes. Figure 6-3 shows an example of this configuration.

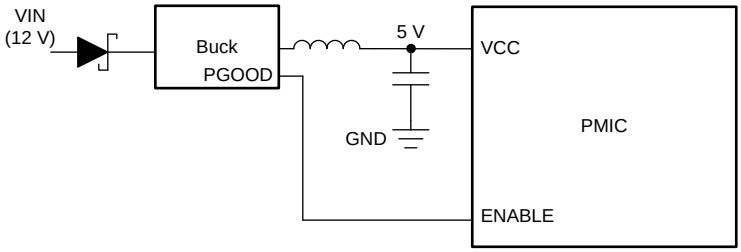

Figure 6-3. Supporting Uncontrolled Power Down when the PMIC is Supplied by a Preregulator

To determine the capacitance needed at the output of the pre-regulator, use Equation 9. This equation is used to ensure that the power down sequence is complete before the device is disabled.

$$C = I \times \Delta T / (VCCA - VSYS_LO) \quad (9)$$

where

- C is total capacitance on VCCA, including preregulator output capacitance and PMIC input capacitance
- I is the total current on the PMIC input supply
- ΔT is the time it takes the power-down sequence to complete
- VCCA is the voltage at the VCCA pin
- VSYS_LO is the threshold where the device is disabled

6.2.2.6.2 Maintaining Sufficient Input Voltage

In the event of high loading during loss of input voltage, there is a risk to go below the voltage level necessary for the internal logic of the device to work properly before the device is disabled. This means that when the VCCA voltage supply level becomes lower than the VSYS_LO threshold, the input voltage may continue dropping to very low voltages during the 180 us ±10% delay before the device is disabled.

Copyright © 2015–2019, Texas Instruments Incorporated

If a large input voltage drop occurs before the device is disabled, the internal logic can no longer properly drive the FETs of the SMPS, and it is possible that the high-side FET and low-side FET of the SMPS are on at the same time. In the event that the high-side and low-side FETs for an SMPS are on at the same time, there is a direct path from SMPSx_IN to GND, allowing cross-conduction and possible damage of the device.

In order to prevent damage or irregular switching behavior, it is important that the voltage at the SMPSx_IN pin stays above 1.8 V, including negative transients, before the device is disabled. The minimum voltage seen at the SMPSx_IN pin is dependent on VCCA and the PCB inductance between the SMPSx_IN pin and the input capacitor. Use Equation 10 to determine the minimum capacitance needed on VCCA to ensure that the device continues switching properly before it is disabled.

$$C = I \times \Delta T / (VSYS_LO - VCCA_{MIN}) \quad (10)$$

where

- C is total capacitance on VCCA, including preregulator output capacitance and PMIC input capacitance
- I is the total current on the PMIC input supply
- ΔT is the maximum debounce time after VCCA = VSYS_LO before the device switches off (198us)
- VSYS_LO is the threshold where the device is disabled
- $VCCA_{MIN}$ is the minimum VCCA voltage to keep the SMPSx_IN transients above 1.8 V

When measuring the SMPSx_IN and VCCA during power down, use active differential probes and a high resolution oscilloscope (4GS/sec or more). VCCA can be measured over the 10uF input capacitor. However, SMPSx_IN must be measured at the pin in order to measure the transients on this rail accurately. To measure SMPSx_IN, place the negative lead of the differential probe at a nearby GND, such as the GND of the SMPSx_IN input capacitor. Place the positive lead of the differential probe directly on the exposed metal of the SMPSx_IN pin. With this set up, verify that SMPSx_IN, including the ripple on this signal, does not drop below 1.8V before the SMPS stops switching. See Figure 6-4 for an example of how to take this measurement. For ways to decrease the amplitude of the transient spikes, see Table 6-3 for recommended parasitic inductance requirements.

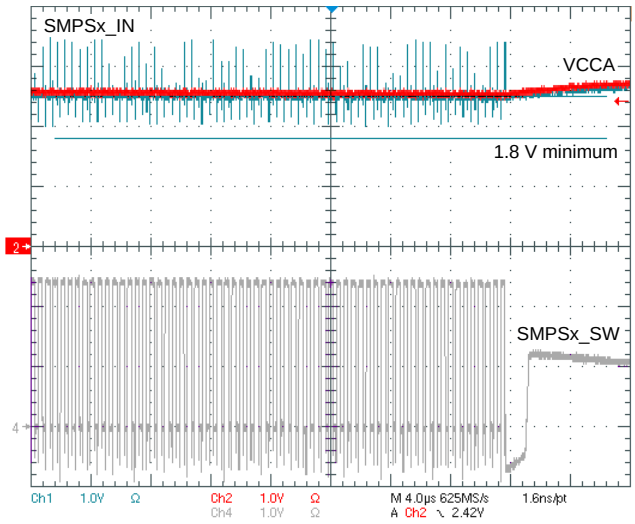

Figure 6-4. Waveform of SMPSx_IN Transients

6.2.2.7 VIO_IN

VIO_IN is the supply for the interface IO circuits inside the device. This pin requires a 0.1-µF decoupling capacitor.

Copyright © 2015–2019, Texas Instruments Incorporated

6.2.2.8 GPADC

To perform a software conversion with the GPADC, use the following steps:

1. Enable software conversion mode – GPADC_SW_SELECT.SW_CONV_EN
2. Select the channel to convert – GPADC_SW_SELECT.SW_CONV0_SEL
   - For channel 0, set up the current source in the GPADC_CTRL1 register if needed.
3. For minimum latency, the GPADC can be set to always on (instead of default enabled from conversion request) by GPADC_CTRL1.GPADC_FORCE.
4. Unmask software conversion interrupt – INT3_MASK.GPADC_EOC_SW
5. Start conversion – GPADC_SW_SELECT.SW_START_CONV0.
6. An interrupt is generated at the end of the conversion INT3_STATUS.GPADC_EOC_SW.
7. Read conversion result – GPADC_SW_CONV0_MSB and GPADC_SW_CONV0_LSB
8. Expected result = dec(GPADC_SW_CONV0_MSB[3:0].GPADC_SW_CONV0_LSB[7:0])/ 4096 × 1.25 × scaler

To perform an auto conversion with the GPADC, use the following steps:

1. Select the channel to convert – GPADC_AUTO_SELECT.AUTO_CONV0_SEL
2. Configure auto conversion frequency – GPADC_AUTO_CTRL.COUNTER_CONV
3. Set the threshold level for comparison – GPADC_THRESH_CONV0_MSB.THRESH_CONV0_MSB, GPADC_THRESH_CONV0_LSB.THRESH_CONV0_LSB
   - Level = expected voltage threshold / (1.25 × scaler) × 4096 (in hexadecimal)
4. Set if the interrupt is triggered when conversion is above or below threshold – GPADC_THRESH_CONV0_MSB.THRESH_CONV0_POL
5. Triggering the threshold level can also be programmed to generate shutdown – GPADC_AUTO_CTRL.SHUTDOWN_CONV0
6. Unmask AUTO_CONV_0 interrupt – INT3_MASK.GPADC_AUTO_0
7. Enable AUTO CONV0 – GPADC_AUTO_CTRL.AUTO_CONV0_EN
8. When selected channel crosses programmed threshold, interrupt is generated – INT3_STATUS.GPADC_AUTO_0
9. Conversion results are available – GPADC_AUTO_CONV0_MSB, GPADC_AUTO_CONV0_LSB
10. If shutdown was enabled, chip switches off after SWOFF_DLY, unless interrupt is cleared

Both examples above are for CONV0; a similar procedure applies to CONV1.

Copyright © 2015–2019, Texas Instruments Incorporated

6.2.3 Application Curves

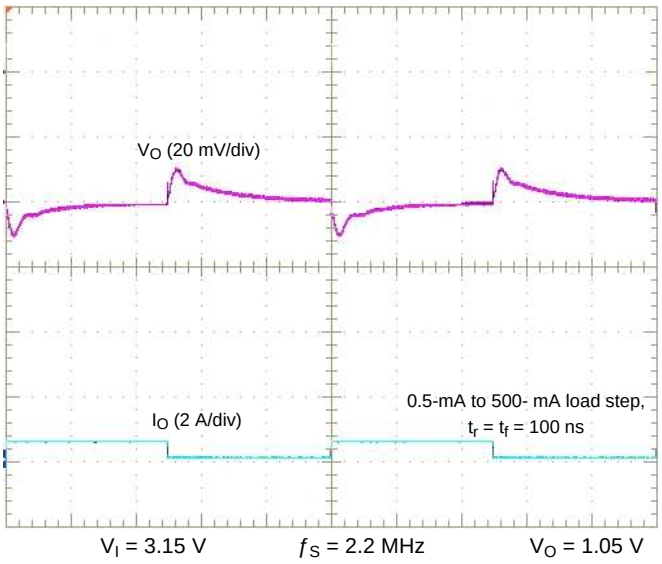

Figure 6-5. Typical SMPS Load Transient Response for SMPS12 in Dual Phase Mode

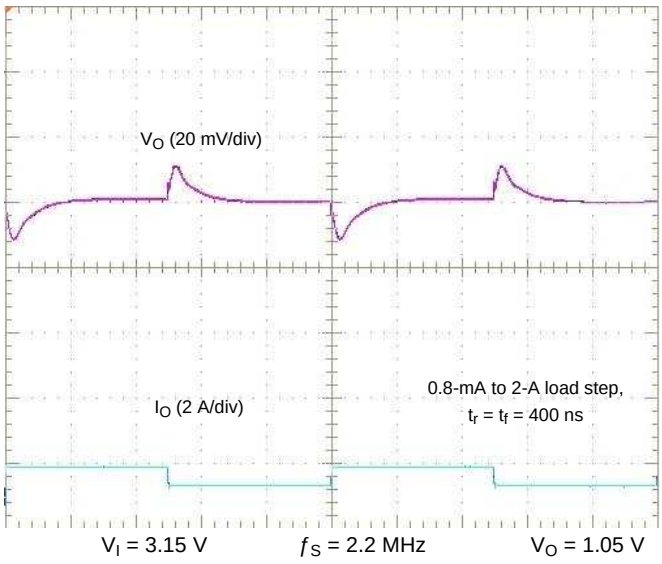

Figure 6-6. Typical SMPS Load Transient Response for SMPS12 in Dual Phase Mode

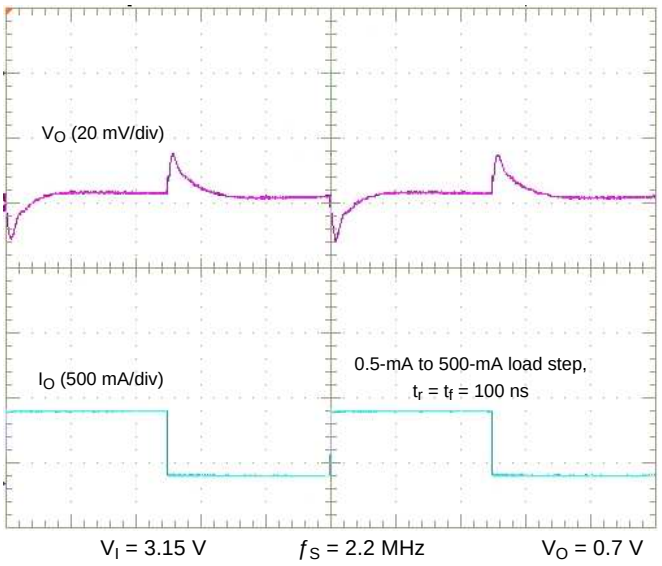

Figure 6-7. Typical SMPS Load Transient Response for SMPS1, SMPS2, SMPS3, and SMPS5

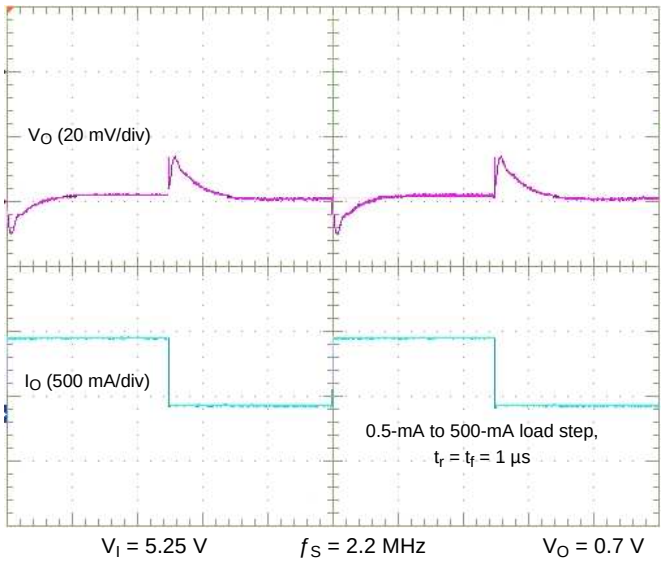

Figure 6-8. Typical SMPS Load Transient Response for SMPS4

Copyright © 2015–2019, Texas Instruments Incorporated

6.3 Layout

6.3.1 Layout Guidelines

As in every switch-mode-supply design, general layout rules apply:

- Use a solid ground-plane for the power ground (PGND)
- Connect those grounds at a star-point that is located ideally underneath the device.
- Place input capacitors as close as possible to the input pins of the device. This placement is paramount and more important than the output-loop.
- Place the inductor and output capacitor as close as possible to the phase node (or switch-node) of the device.
- Keep the loop-area formed by the phase-node, inductor, output-capacitor, and PGND as small as possible.
- For traces and vias on power-lines, keep inductance and resistance as small as possible by using wide traces. Avoid switching layers but, if needed, use plenty of vias.

The goal of these guidelines is a layout that minimizes emissions, maximizes EMI immunity, and maintains a safe operating area (SOA) for the device.

To minimize the spiking at the phase-node for both the high-side (VIN to SWx) and low-side (SWx to PGND), the decoupling of VIN is the most important guideline. Appropriate decoupling and thorough layout should ensure that the spikes never exceed 7V across the high-side and low-side FETs.

Figure 6-9 shows a set of guidelines regarding parasitic inductance and resistance that are recommended.

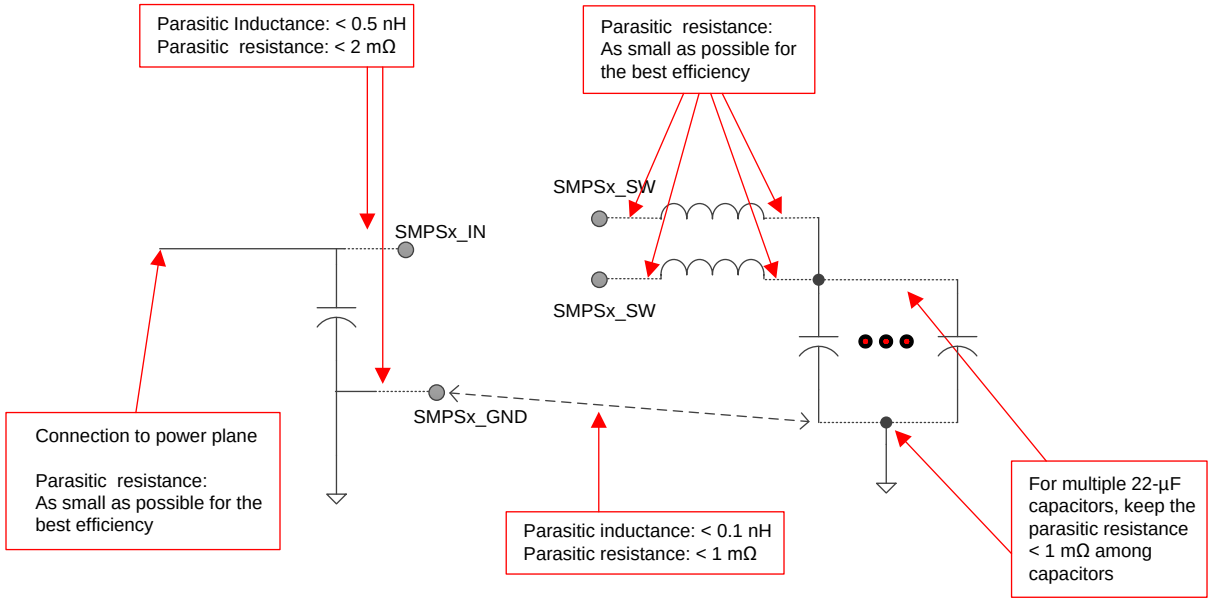

Figure 6-9. Parasitic Inductance and Resistance

Table 6-3 lists the maximum allowable parasitic (inductance measured at 100 MHz) and the achievable values in an optimized layout.

Table 6-3. Maximum Allowable Parasitic

CONNECTION	MAXIMUM ALLOWABLE INDUCTANCE	MAXIMUM ALLOWABLE RESISTANCE	OPTIMIZED LAYOUT (EVM) INDUCTANCE		OPTIMIZED LAYOUT (EVM) RESISTANCE	
PowerPlane to C_{IN}	N/A	N/A for SOA Maintain a low resistance value for efficiency	N/A		N/A for SOA Maintain a low resistance value for efficiency	
C_{IN} to SMPSx_IN	0.5 nH	2 mΩ	SMPS1	0.2 nH	SMPS1	1.1 mΩ
			SMPS2	0.2 nH	SMPS2	1.6 mΩ
			SMPS3	0.2 nH	SMPS3	1.5 mΩ
			SMPS4	0.2 nH	SMPS4	1.8 mΩ
			SMPS5	0.2 nH	SMPS5	1.5 mΩ
C_{IN} to PGND	0.5 nH	2 mΩ	SMPS1	0.3 nH	SMPS1	0.4 mΩ
			SMPS2	0.3 nH	SMPS2	0.4 mΩ
			SMPS3	0.4 nH	SMPS3	0.5 mΩ
			SMPS4	0.3 nH	SMPS4	0.6 mΩ
			SMPS5	0.4 nH	SMPS5	0.5 mΩ
SMPSx_SW to inductor	N/A	N/A for SOA Maintain a low resistance value for efficiency	N/A		SMPS1	1 mΩ
					SMPS2	0.7 mΩ
					SMPS3	1 mΩ
					SMPS4	0.7 mΩ
					SMPS5	1.4 mΩ
Inductor to C_{OUT}	N/A	N/A for SOA Maintain a low resistance value for efficiency	N/A		N/A for SOA Maintain a low resistance value for efficiency	
C_{OUT} to GND	Use dedicated GND plane to keep inductance low	1 mΩ	SMPS1	0.8 nH	SMPS1	0.7 mΩ
			SMPS2	0.6 nH	SMPS2	0.8 mΩ
			SMPS3	0.5 nH	SMPS3	0.6 mΩ
			SMPS4	0.4 nH	SMPS4	0.6 mΩ
			SMPS5	0.5 nH	SMPS5	0.5 mΩ
GND (C_{IN}) to GND (C_{OUT})	Use dedicated GND plane to keep inductance low	1 mΩ	Use dedicated GND plane to keep inductance low		mΩ	

Texas Instruments recommends measuring the voltages across the high-side FET (voltage at SMPSx_IN versus SMPSx_SW) and the low-side FET (SMPSx_SW versus PGND) with a high bandwidth, high sampling-rate scope with a low-capacitance probe (ideally a differential probe). Measure the voltages as close as possible to the device pins and verify the amplitude of the spikes. A small-loop ground connection to PGND is essential.

When measuring the voltage difference between the SMPSx_IN and SMPSx_SW pins, there should be a maximum of 7 V when measuring at the pins. Similarly, when measuring the voltage difference between the SMPSx_SW and PGND pins, there should be a maximum of 7 V when measuring at the pins.

For more information on cursor-positioning, see Figure 6-10 and Figure 6-11.

Copyright © 2015–2019, Texas Instruments Incorporated

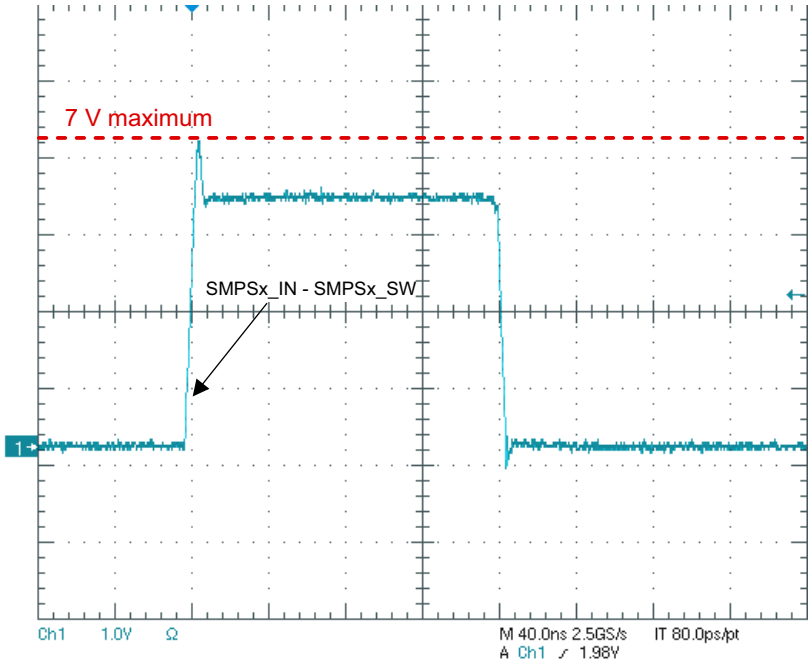

Measure across the high-side FET (SMPSx_IN – SMPSx_SW) as close to the IC as possible. The preferred measurement is with a differential probe. The negative side of the probe should be at SMPSx_SW and the positive side of the probe should measure SMPSx_IN. As shown in this image, the voltage across the high-side FET should not exceed 7 V. Repeat the measurement for all SMPSs in use.

Figure 6-10. Measuring the High-Side FET (Differentially)

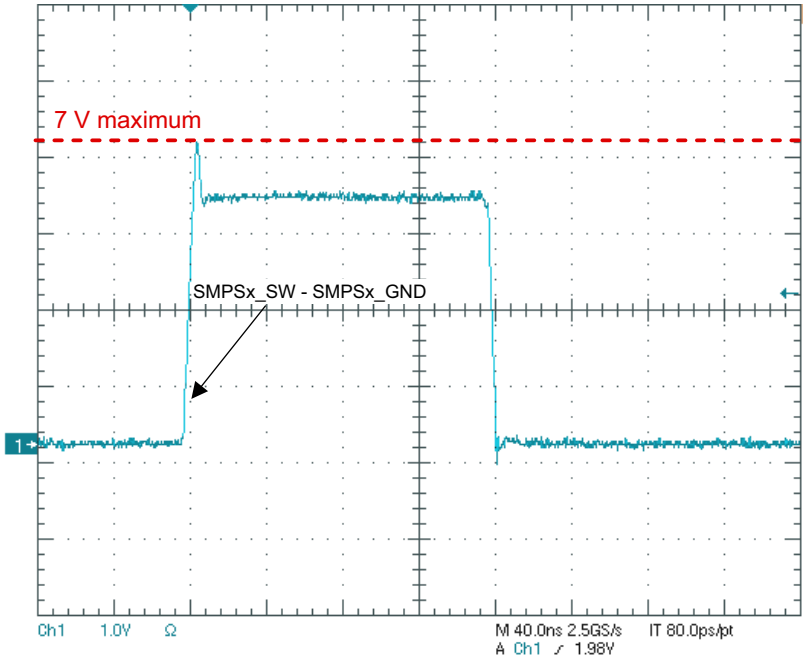

Measure across the low-side FET (SMPSx_SW – GND) as close to the IC as possible. The preferred measurement is with a differential probe. The negative side of the probe should be at GND and the positive side of the probe should measure SMPSx_SW. As shown in this image, the voltage across the low-side FET should not exceed 7 V.Repeat the measurement for all SMPSs in use.

Figure 6-11. Measuring the Low-Side FET (Differentially)

Copyright © 2015–2019, Texas Instruments Incorporated

6.3.2 Layout Example

See Figure 6-12 and Figure 6-13 for the actual placement and routing on the EVM.

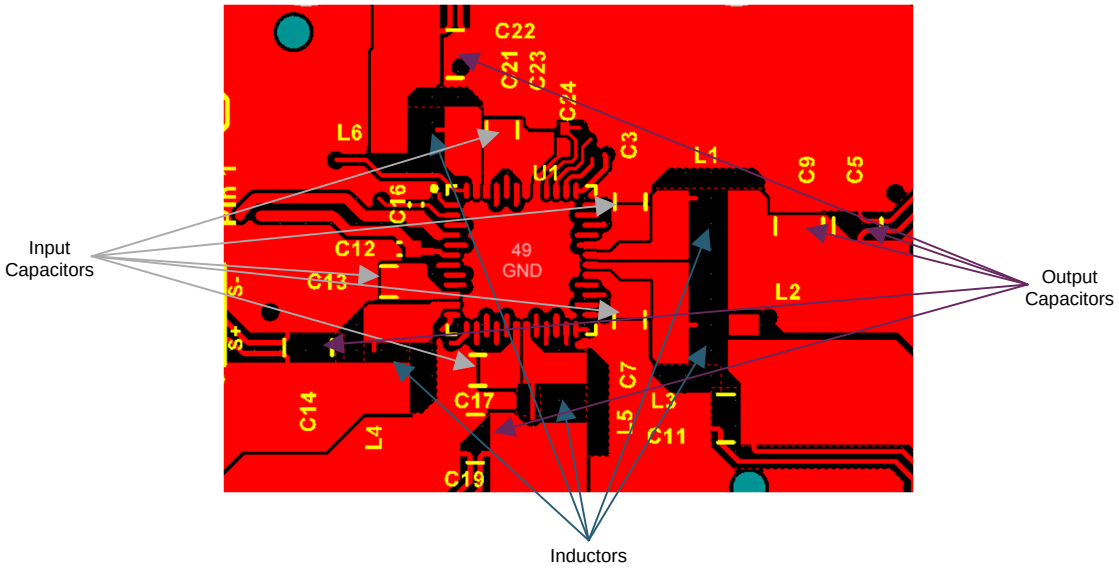

Figure 6-12. Top Layer Overview of Inductor and Capacitor Placement and Routing of SMPSs

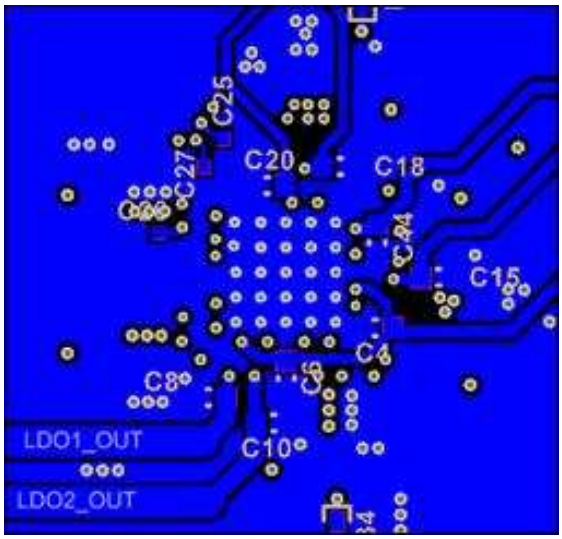

Figure 6-13. Bottom Layer Overview of Capacitor Placement and Routing of LDOs

6.4 Power Supply Coupling and Bulk Capacitors

The TPS65917-Q1 device is designed to work with an analog supply-voltage range of 3.135 V to 5.25 V. The input supply should be well regulated and connected to the VCCA pin, as well as SMPS and LDO input pins with appropriate bypass capacitors as recommended in Table 6-2. If the input supply is located more than a few inches from the TPS65917-Q1 device, additional capacitance may be required in addition to the recommended input capacitors at the VCCA pin and the SMPS and LDO input pins.

Copyright © 2015–2019, Texas Instruments Incorporated

7 Device and Documentation Support

7.1 Device Support

7.1.1 Third-Party Products Disclaimer

TI'S PUBLICATION OF INFORMATION REGARDING THIRD-PARTY PRODUCTS OR SERVICES DOES NOT CONSTITUTE AN ENDORSEMENT REGARDING THE SUITABILITY OF SUCH PRODUCTS OR SERVICES OR A WARRANTY, REPRESENTATION OR ENDORSEMENT OF SUCH PRODUCTS OR SERVICES, EITHER ALONE OR IN COMBINATION WITH ANY TI PRODUCT OR SERVICE.

7.1.2 Device Nomenclature

The following acronyms and terms are used in this data sheet. For a detailed list of terms, acronyms, and definitions, see the *TI glossary*.

ADC Analog-to-digital converter
APE Application processor engine
DVS Digital voltage scaling
GPIO General-purpose input and output
LDO Low-dropout voltage linear regulator
PM Power management
PMIC Power-management integrated circuit
PSRR Power supply rejection ratio
RTC Real-time clock
SMPS Switched-mode power supply
NA Not applicable
OTP One-time programmable
ESR Equivalent series resistance
PMU Power management unit
PFM Pulse frequency
PWM Pulse width modulation
SPI Serial peripheral interface
EPC Embedded power controller
FSD First supply detection

7.2 Documentation Support

7.2.1 Related Documentation

For related documentation see the following:

- Texas Instruments, *Automotive Off-Battery Processor Power Reference Design for ADAS and Infotainment*
- Texas Instruments, *Guide to Using the GPADC in TPS65903x and TPS6591x Devices*
- Texas Instruments, *Safety Manual for TPS65917-Q1 Power Management Unit (PMU) for Processor*
- Texas Instruments, *TPS65917-Q1 EVM User's Guide*
- Texas Instruments, *TPS65917-Q1 Register Map*
- Texas Instruments, *TPS65917-Q1 User's Guide to Power DRA7xx and TDA2x/TDA2Ex*
- Texas Instruments, *TPS65919-Q1 and TPS65917-Q1 User's Guide to Power DRA71x, DRA79x, and TDA2E-17*

Copyright © 2015–2019, Texas Instruments Incorporated

- Texas Instruments, *TPS65919-Q1 and TPS65917-Q1 User's Guide to Power TDA3x*

7.3 Receiving Notification of Documentation Updates

To receive notification of documentation updates, navigate to the device product folder on ti.com. In the upper right corner, click on *Alert me* to register and receive a weekly digest of any product information that has changed. For change details, review the revision history included in any revised document.

7.4 Community Resources

The following links connect to TI community resources. Linked contents are provided "AS IS" by the respective contributors. They do not constitute TI specifications and do not necessarily reflect TI's views; see TI's Terms of Use.

TI E2E™ Online Community The TI engineer-to-engineer (E2E) community was created to foster collaboration among engineers. At e2e.ti.com, you can ask questions, share knowledge, explore ideas and help solve problems with fellow engineers.

Design Support ***TI's Design Support*** Quickly find helpful E2E forums along with design support tools and contact information for technical support.

7.5 Trademarks

Eco-mode, E2E are trademarks of Texas Instruments.
All other trademarks are the property of their respective owners.

7.6 Electrostatic Discharge Caution



This integrated circuit can be damaged by ESD. Texas Instruments recommends that all integrated circuits be handled with appropriate precautions. Failure to observe proper handling and installation procedures can cause damage.

ESD damage can range from subtle performance degradation to complete device failure. Precision integrated circuits may be more susceptible to damage because very small parametric changes could cause the device not to meet its published specifications.

7.7 Glossary

TI Glossary This glossary lists and explains terms, acronyms, and definitions.

8 Mechanical, Packaging, and Orderable Information

The following pages include mechanical, packaging, and orderable information. This information is the most current data available for the designated devices. This data is subject to change without notice and revision of this document. For browser-based versions of this data sheet, refer to the left-hand navigation.

Copyright © 2015–2019, Texas Instruments Incorporated

PACKAGING INFORMATION

Orderable part number	Status (1)	Material type (2)	Package | Pins	Package qty | Carrier	RoHS (3)	Lead finish/ Ball material (4)	MSL rating/ Peak reflow (5)	Op temp (°C)	Part marking (6)
O917A130TRGZRQ1	Active	Production	VQFN (RGZ) | 48	2500 | LARGE T&R	Yes	NIPDAU	Level-3-260C-168 HR	-40 to 105	TPS65917 OTP 30 1.1
O917A130TRGZRQ1.A	Active	Production	VQFN (RGZ) | 48	2500 | LARGE T&R	Yes	NIPDAU	Level-3-260C-168 HR	-40 to 105	TPS65917 OTP 30 1.1
O917A130TRGZTQ1	Active	Production	VQFN (RGZ) | 48	250 | SMALL T&R	Yes	NIPDAU	Level-3-260C-168 HR	-40 to 105	TPS65917 OTP 30 1.1
O917A130TRGZTQ1.A	Active	Production	VQFN (RGZ) | 48	250 | SMALL T&R	Yes	NIPDAU	Level-3-260C-168 HR	-40 to 105	TPS65917 OTP 30 1.1
O917A131TRGZRQ1	Active	Production	VQFN (RGZ) | 48	2500 | LARGE T&R	Yes	NIPDAU	Level-3-260C-168 HR	-40 to 105	TPS65917 OTP 31 1.1
O917A131TRGZRQ1.A	Active	Production	VQFN (RGZ) | 48	2500 | LARGE T&R	Yes	NIPDAU	Level-3-260C-168 HR	-40 to 105	TPS65917 OTP 31 1.1
O917A131TRGZTQ1	Active	Production	VQFN (RGZ) | 48	250 | SMALL T&R	Yes	NIPDAU	Level-3-260C-168 HR	-40 to 105	TPS65917 OTP 31 1.1
O917A131TRGZTQ1.A	Active	Production	VQFN (RGZ) | 48	250 | SMALL T&R	Yes	NIPDAU	Level-3-260C-168 HR	-40 to 105	TPS65917 OTP 31 1.1
O917A132TRGZRQ1	Active	Production	VQFN (RGZ) | 48	2500 | LARGE T&R	Yes	NIPDAU	Level-3-260C-168 HR	-40 to 105	TPS65917 OTP 32 1.1
O917A132TRGZRQ1.A	Active	Production	VQFN (RGZ) | 48	2500 | LARGE T&R	Yes	NIPDAU	Level-3-260C-168 HR	-40 to 105	TPS65917 OTP 32 1.1
O917A132TRGZTQ1	Active	Production	VQFN (RGZ) | 48	250 | SMALL T&R	Yes	NIPDAU	Level-3-260C-168 HR	-40 to 105	TPS65917 OTP 32 1.1
O917A132TRGZTQ1.A	Active	Production	VQFN (RGZ) | 48	250 | SMALL T&R	Yes	NIPDAU	Level-3-260C-168 HR	-40 to 105	TPS65917 OTP 32 1.1
O917A133TRGZRQ1	Active	Production	VQFN (RGZ) | 48	2500 | LARGE T&R	Yes	NIPDAU	Level-3-260C-168 HR	-40 to 105	TPS65917 OTP 33 1.1
O917A133TRGZRQ1.A	Active	Production	VQFN (RGZ) | 48	2500 | LARGE T&R	Yes	NIPDAU	Level-3-260C-168 HR	-40 to 105	TPS65917 OTP 33 1.1
O917A133TRGZTQ1	Active	Production	VQFN (RGZ) | 48	250 | SMALL T&R	Yes	NIPDAU	Level-3-260C-168 HR	-40 to 105	TPS65917 OTP 33 1.1
O917A133TRGZTQ1.A	Active	Production	VQFN (RGZ) | 48	250 | SMALL T&R	Yes	NIPDAU	Level-3-260C-168 HR	-40 to 105	TPS65917 OTP 33 1.1

Orderable part number	Status (1)	Material type (2)	Package | Pins	Package qty | Carrier	RoHS (3)	Lead finish/ Ball material (4)	MSL rating/ Peak reflow (5)	Op temp (°C)	Part marking (6)
O917A14DTRGZRQ1	Active	Production	VQFN (RGZ) | 48	2500 | LARGE T&R	Yes	NIPDAU	Level-3-260C-168 HR	-40 to 105	TPS65917 OTP 4D 1.1
O917A14DTRGZRQ1.A	Active	Production	VQFN (RGZ) | 48	2500 | LARGE T&R	Yes	NIPDAU	Level-3-260C-168 HR	-40 to 105	TPS65917 OTP 4D 1.1
O917A14DTRGZTQ1	Active	Production	VQFN (RGZ) | 48	250 | SMALL T&R	Yes	NIPDAU	Level-3-260C-168 HR	-40 to 105	TPS65917 OTP 4D 1.1
O917A14DTRGZTQ1.A	Active	Production	VQFN (RGZ) | 48	250 | SMALL T&R	Yes	NIPDAU	Level-3-260C-168 HR	-40 to 105	TPS65917 OTP 4D 1.1
O917A14FTRGZRQ1	Active	Production	VQFN (RGZ) | 48	2500 | LARGE T&R	Yes	NIPDAU	Level-3-260C-168 HR	-40 to 105	TPS65917 OTP 4F 1.1
O917A14FTRGZRQ1.A	Active	Production	VQFN (RGZ) | 48	2500 | LARGE T&R	Yes	NIPDAU	Level-3-260C-168 HR	-40 to 105	TPS65917 OTP 4F 1.1
O917A14FTRGZTQ1	Active	Production	VQFN (RGZ) | 48	250 | SMALL T&R	Yes	NIPDAU	Level-3-260C-168 HR	-40 to 105	TPS65917 OTP 4F 1.1
O917A14FTRGZTQ1.A	Active	Production	VQFN (RGZ) | 48	250 | SMALL T&R	Yes	NIPDAU	Level-3-260C-168 HR	-40 to 105	TPS65917 OTP 4F 1.1
O917A151TRGZRQ1	Active	Production	VQFN (RGZ) | 48	2500 | LARGE T&R	Yes	NIPDAU	Level-3-260C-168 HR	-40 to 105	TPS65917 OTP 51 1.1
O917A151TRGZRQ1.A	Active	Production	VQFN (RGZ) | 48	2500 | LARGE T&R	Yes	NIPDAU	Level-3-260C-168 HR	-40 to 105	TPS65917 OTP 51 1.1
O917A152TRGZRQ1	Active	Production	VQFN (RGZ) | 48	2500 | LARGE T&R	Yes	NIPDAU	Level-3-260C-168 HR	-40 to 105	TPS65917 OTP 52 1.1
O917A152TRGZRQ1.A	Active	Production	VQFN (RGZ) | 48	2500 | LARGE T&R	Yes	NIPDAU	Level-3-260C-168 HR	-40 to 105	TPS65917 OTP 52 1.1
O917A152TRGZTQ1	Active	Production	VQFN (RGZ) | 48	250 | SMALL T&R	Yes	NIPDAU	Level-3-260C-168 HR	-40 to 105	TPS65917 OTP 52 1.1
O917A152TRGZTQ1.A	Active	Production	VQFN (RGZ) | 48	250 | SMALL T&R	Yes	NIPDAU	Level-3-260C-168 HR	-40 to 105	TPS65917 OTP 52 1.1
O917A154TRGZRQ1	Active	Production	VQFN (RGZ) | 48	2500 | LARGE T&R	Yes	NIPDAU	Level-3-260C-168 HR	-40 to 105	TPS65917 OTP 54 1.1
O917A154TRGZRQ1.A	Active	Production	VQFN (RGZ) | 48	2500 | LARGE T&R	Yes	NIPDAU	Level-3-260C-168 HR	-40 to 105	TPS65917 OTP 54 1.1
O917A154TRGZTQ1	Active	Production	VQFN (RGZ) | 48	250 | SMALL T&R	Yes	NIPDAU	Level-3-260C-168 HR	-40 to 105	TPS65917 OTP 54 1.1

Orderable part number	Status (1)	Material type (2)	Package | Pins	Package qty | Carrier	RoHS (3)	Lead finish/ Ball material (4)	MSL rating/ Peak reflow (5)	Op temp (°C)	Part marking (6)
O917A154TRGZTQ1.A	Active	Production	VQFN (RGZ) | 48	250 | SMALL T&R	Yes	NIPDAU	Level-3-260C-168 HR	-40 to 105	TPS65917 OTP 54 1.1
O917A186TRGZRQ1	Active	Production	VQFN (RGZ) | 48	2500 | LARGE T&R	Yes	NIPDAU	Level-3-260C-168 HR	-40 to 105	TPS65917 OTP 86 1.1
O917A186TRGZRQ1.A	Active	Production	VQFN (RGZ) | 48	2500 | LARGE T&R	Yes	NIPDAU	Level-3-260C-168 HR	-40 to 105	TPS65917 OTP 86 1.1

(1) **Status:** For more details on status, see our product life cycle.

(2) **Material type:** When designated, preproduction parts are prototypes/experimental devices, and are not yet approved or released for full production. Testing and final process, including without limitation quality assurance, reliability performance testing, and/or process qualification, may not yet be complete, and this item is subject to further changes or possible discontinuation. If available for ordering, purchases will be subject to an additional waiver at checkout, and are intended for early internal evaluation purposes only. These items are sold without warranties of any kind.

(3) **RoHS values:** Yes, No, RoHS Exempt. See the TI RoHS Statement for additional information and value definition.

(4) **Lead finish/Ball material:** Parts may have multiple material finish options. Finish options are separated by a vertical ruled line. Lead finish/Ball material values may wrap to two lines if the finish value exceeds the maximum column width.

(5) **MSL rating/Peak reflow:** The moisture sensitivity level ratings and peak solder (reflow) temperatures. In the event that a part has multiple moisture sensitivity ratings, only the lowest level per JEDEC standards is shown. Refer to the shipping label for the actual reflow temperature that will be used to mount the part to the printed circuit board.

(6) **Part marking:** There may be an additional marking, which relates to the logo, the lot trace code information, or the environmental category of the part.

Multiple part markings will be inside parentheses. Only one part marking contained in parentheses and separated by a "~" will appear on a part. If a line is indented then it is a continuation of the previous line and the two combined represent the entire part marking for that device.

Important Information and Disclaimer: The information provided on this page represents TI's knowledge and belief as of the date that it is provided. TI bases its knowledge and belief on information provided by third parties, and makes no representation or warranty as to the accuracy of such information. Efforts are underway to better integrate information from third parties. TI has taken and continues to take reasonable steps to provide representative and accurate information but may not have conducted destructive testing or chemical analysis on incoming materials and chemicals. TI and TI suppliers consider certain information to be proprietary, and thus CAS numbers and other limited information may not be available for release.

In no event shall TI's liability arising out of such information exceed the total purchase price of the TI part(s) at issue in this document sold by TI to Customer on an annual basis.

TAPE AND REEL INFORMATION

REEL DIMENSIONS

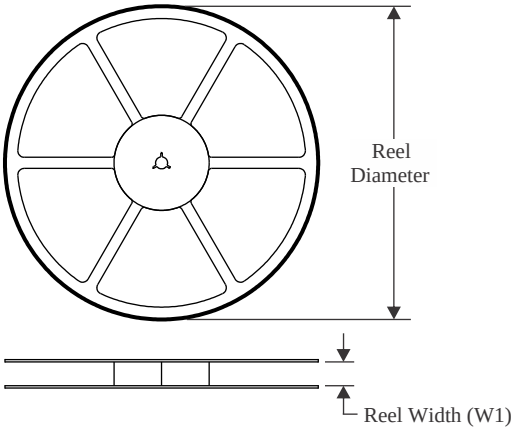

TAPE DIMENSIONS

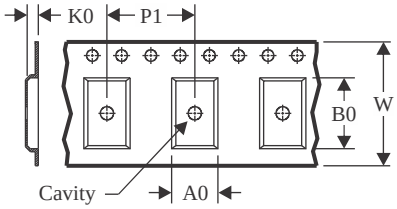

A0	Dimension designed to accommodate the component width
B0	Dimension designed to accommodate the component length
K0	Dimension designed to accommodate the component thickness
W	Overall width of the carrier tape
P1	Pitch between successive cavity centers

QUADRANT ASSIGNMENTS FOR PIN 1 ORIENTATION IN TAPE

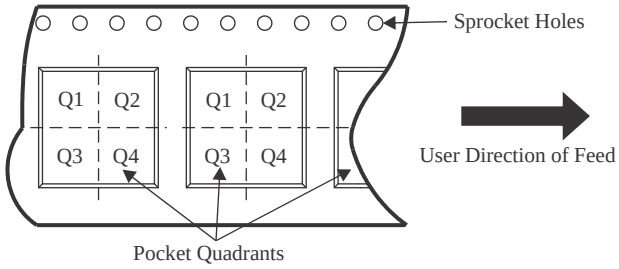

*All dimensions are nominal

Device	Package Type	Package Drawing	Pins	SPQ	Reel Diameter (mm)	Reel Width W1 (mm)	A0 (mm)	B0 (mm)	K0 (mm)	P1 (mm)	W (mm)	Pin1 Quadrant
O917A130TRGZRQ1	VQFN	RGZ	48	2500	330.0	16.4	7.3	7.3	1.1	12.0	16.0	Q2
O917A130TRGZRQ1	VQFN	RGZ	48	2500	330.0	16.4	7.3	7.3	1.1	12.0	16.0	Q2
O917A130TRGZTQ1	VQFN	RGZ	48	250	180.0	16.4	7.3	7.3	1.1	12.0	16.0	Q2
O917A131TRGZRQ1	VQFN	RGZ	48	2500	330.0	16.4	7.3	7.3	1.1	12.0	16.0	Q2
O917A131TRGZRQ1	VQFN	RGZ	48	2500	330.0	16.4	7.3	7.3	1.1	12.0	16.0	Q2
O917A131TRGZTQ1	VQFN	RGZ	48	250	180.0	16.4	7.3	7.3	1.1	12.0	16.0	Q2
O917A132TRGZRQ1	VQFN	RGZ	48	2500	330.0	16.4	7.3	7.3	1.1	12.0	16.0	Q2
O917A132TRGZRQ1	VQFN	RGZ	48	2500	330.0	16.4	7.3	7.3	1.1	12.0	16.0	Q2
O917A132TRGZTQ1	VQFN	RGZ	48	250	180.0	16.4	7.3	7.3	1.1	12.0	16.0	Q2
O917A133TRGZRQ1	VQFN	RGZ	48	2500	330.0	16.4	7.3	7.3	1.1	12.0	16.0	Q2
O917A133TRGZRQ1	VQFN	RGZ	48	2500	330.0	16.4	7.3	7.3	1.1	12.0	16.0	Q2
O917A133TRGZTQ1	VQFN	RGZ	48	250	180.0	16.4	7.3	7.3	1.1	12.0	16.0	Q2
O917A14DTRGZRQ1	VQFN	RGZ	48	2500	330.0	16.4	7.3	7.3	1.1	12.0	16.0	Q2
O917A14DTRGZRQ1	VQFN	RGZ	48	2500	330.0	16.4	7.3	7.3	1.1	12.0	16.0	Q2
O917A14DTRGZTQ1	VQFN	RGZ	48	250	180.0	16.4	7.3	7.3	1.1	12.0	16.0	Q2
O917A14FTRGZRQ1	VQFN	RGZ	48	2500	330.0	16.4	7.3	7.3	1.1	12.0	16.0	Q2

Device	Package Type	Package Drawing	Pins	SPQ	Reel Diameter (mm)	Reel Width W1 (mm)	A0 (mm)	B0 (mm)	K0 (mm)	P1 (mm)	W (mm)	Pin1 Quadrant
O917A14FTRGZRQ1	VQFN	RGZ	48	2500	330.0	16.4	7.3	7.3	1.1	12.0	16.0	Q2
O917A14FTRGZTQ1	VQFN	RGZ	48	250	180.0	16.4	7.3	7.3	1.1	12.0	16.0	Q2
O917A151TRGZRQ1	VQFN	RGZ	48	2500	330.0	16.4	7.3	7.3	1.1	12.0	16.0	Q2
O917A151TRGZRQ1	VQFN	RGZ	48	2500	330.0	16.4	7.3	7.3	1.1	12.0	16.0	Q2
O917A152TRGZRQ1	VQFN	RGZ	48	2500	330.0	16.4	7.3	7.3	1.1	12.0	16.0	Q2
O917A152TRGZRQ1	VQFN	RGZ	48	2500	330.0	16.4	7.3	7.3	1.1	12.0	16.0	Q2
O917A152TRGZTQ1	VQFN	RGZ	48	250	180.0	16.4	7.3	7.3	1.1	12.0	16.0	Q2
O917A154TRGZRQ1	VQFN	RGZ	48	2500	330.0	16.4	7.3	7.3	1.1	12.0	16.0	Q2
O917A154TRGZRQ1	VQFN	RGZ	48	2500	330.0	16.4	7.3	7.3	1.1	12.0	16.0	Q2
O917A154TRGZTQ1	VQFN	RGZ	48	250	180.0	16.4	7.3	7.3	1.1	12.0	16.0	Q2
O917A186TRGZRQ1	VQFN	RGZ	48	2500	330.0	16.4	7.3	7.3	1.1	12.0	16.0	Q2

TAPE AND REEL BOX DIMENSIONS

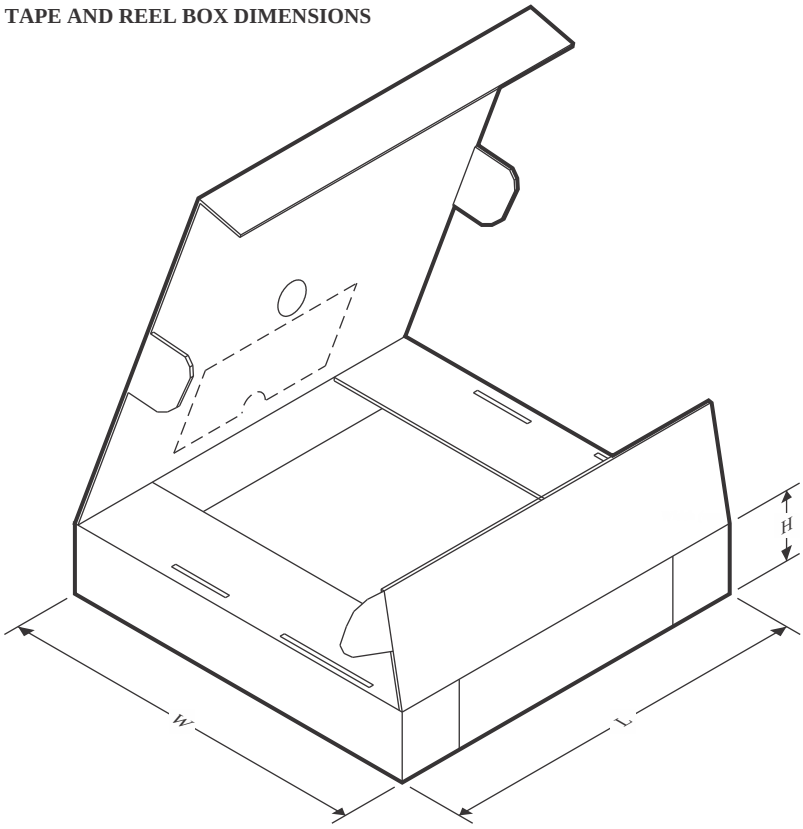

*All dimensions are nominal

Device	Package Type	Package Drawing	Pins	SPQ	Length (mm)	Width (mm)	Height (mm)
O917A130TRGZRQ1	VQFN	RGZ	48	2500	367.0	367.0	38.0
O917A130TRGZRQ1	VQFN	RGZ	48	2500	367.0	367.0	35.0
O917A130TRGZTQ1	VQFN	RGZ	48	250	210.0	185.0	35.0
O917A131TRGZRQ1	VQFN	RGZ	48	2500	367.0	367.0	38.0
O917A131TRGZRQ1	VQFN	RGZ	48	2500	367.0	367.0	35.0
O917A131TRGZTQ1	VQFN	RGZ	48	250	210.0	185.0	35.0
O917A132TRGZRQ1	VQFN	RGZ	48	2500	367.0	367.0	38.0
O917A132TRGZRQ1	VQFN	RGZ	48	2500	367.0	367.0	35.0
O917A132TRGZTQ1	VQFN	RGZ	48	250	210.0	185.0	35.0
O917A133TRGZRQ1	VQFN	RGZ	48	2500	367.0	367.0	35.0
O917A133TRGZRQ1	VQFN	RGZ	48	2500	367.0	367.0	38.0
O917A133TRGZTQ1	VQFN	RGZ	48	250	210.0	185.0	35.0
O917A14DTRGZRQ1	VQFN	RGZ	48	2500	367.0	367.0	38.0
O917A14DTRGZRQ1	VQFN	RGZ	48	2500	367.0	367.0	35.0
O917A14DTRGZTQ1	VQFN	RGZ	48	250	210.0	185.0	35.0
O917A14FTRGZRQ1	VQFN	RGZ	48	2500	367.0	367.0	38.0
O917A14FTRGZRQ1	VQFN	RGZ	48	2500	367.0	367.0	35.0
O917A14FTRGZTQ1	VQFN	RGZ	48	250	210.0	185.0	35.0

Device	Package Type	Package Drawing	Pins	SPQ	Length (mm)	Width (mm)	Height (mm)
O917A151TRGZRQ1	VQFN	RGZ	48	2500	367.0	367.0	35.0
O917A151TRGZRQ1	VQFN	RGZ	48	2500	367.0	367.0	38.0
O917A152TRGZRQ1	VQFN	RGZ	48	2500	367.0	367.0	38.0
O917A152TRGZRQ1	VQFN	RGZ	48	2500	367.0	367.0	35.0
O917A152TRGZTQ1	VQFN	RGZ	48	250	210.0	185.0	35.0
O917A154TRGZRQ1	VQFN	RGZ	48	2500	367.0	367.0	35.0
O917A154TRGZRQ1	VQFN	RGZ	48	2500	367.0	367.0	38.0
O917A154TRGZTQ1	VQFN	RGZ	48	250	210.0	185.0	35.0
O917A186TRGZRQ1	VQFN	RGZ	48	2500	367.0	367.0	35.0

GENERIC PACKAGE VIEW

RGZ 48

VQFN - 1 mm max height

7 x 7, 0.5 mm pitch

PLASTIC QUADFLAT PACK- NO LEAD

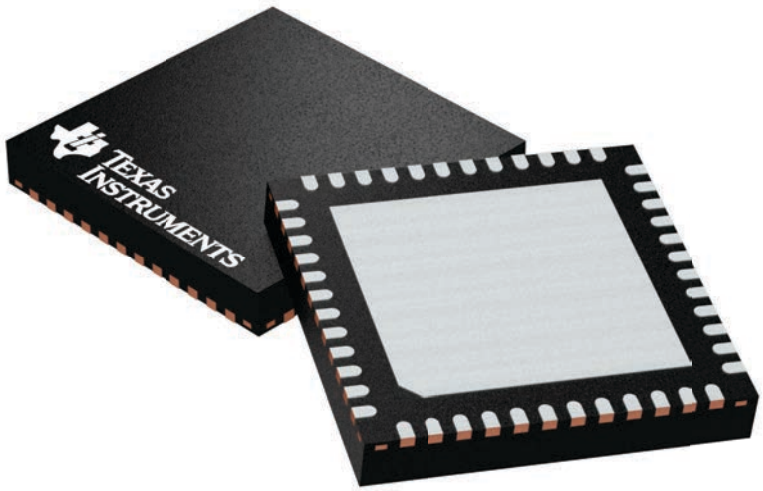

Images above are just a representation of the package family, actual package may vary.
Refer to the product data sheet for package details.

4224671/A

PACKAGE OUTLINE

RGZ0048D

VQFN - 1 mm max height

PLASTIC QUAD FLATPACK - NO LEAD

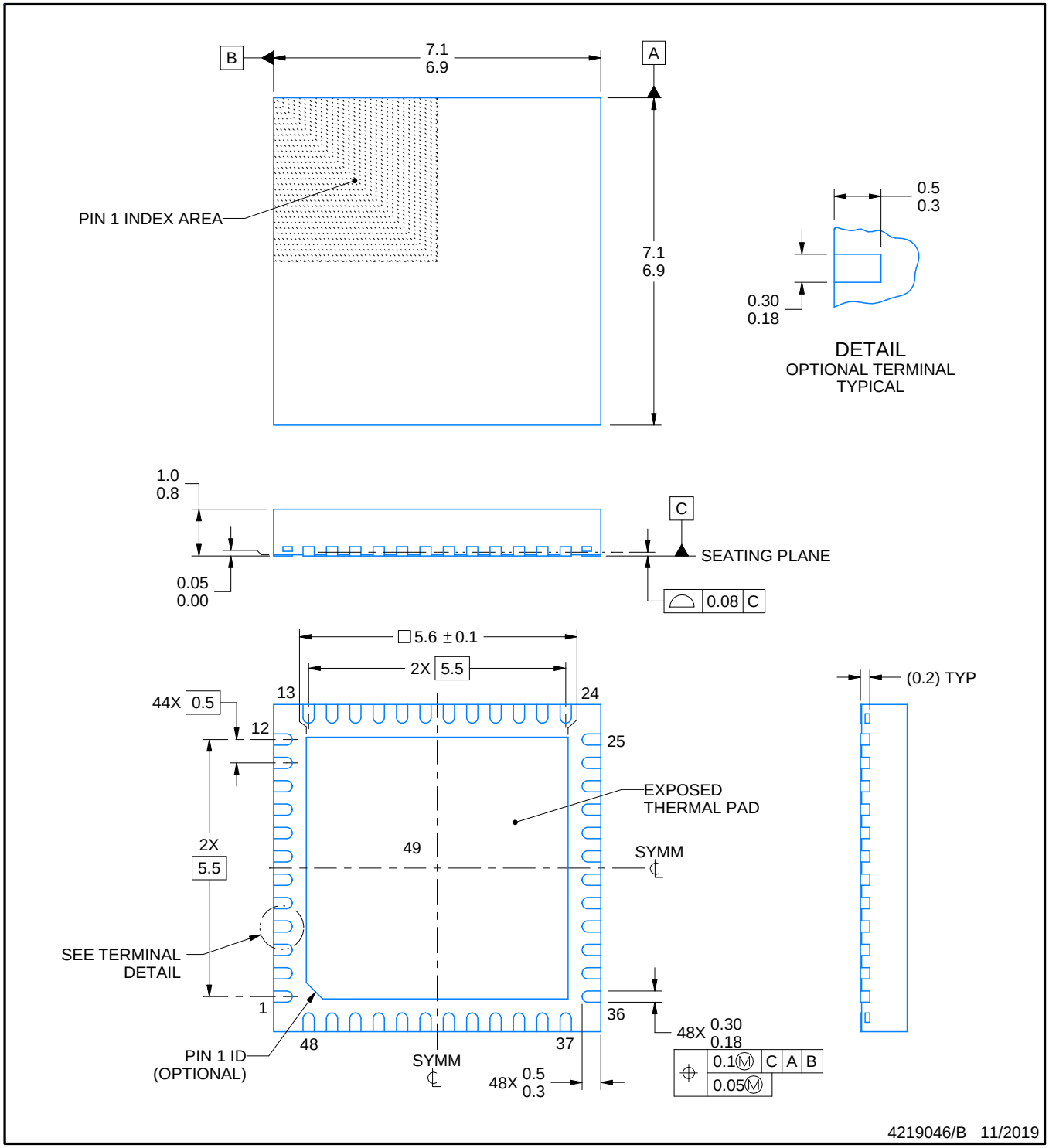

NOTES:

1. All linear dimensions are in millimeters. Any dimensions in parenthesis are for reference only. Dimensioning and tolerancing per ASME Y14.5M.
2. This drawing is subject to change without notice.
3. The package thermal pad must be soldered to the printed circuit board for thermal and mechanical performance.

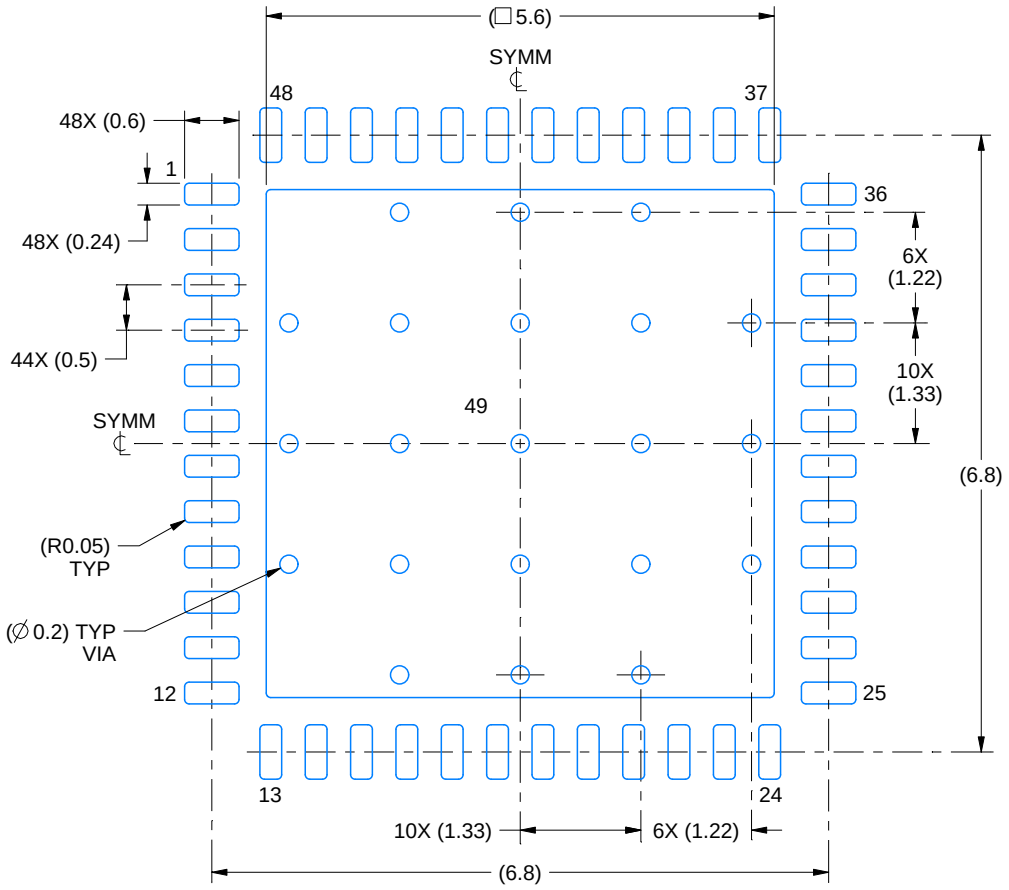

LAND PATTERN EXAMPLE
EXPOSED METAL SHOWN
SCALE:12X

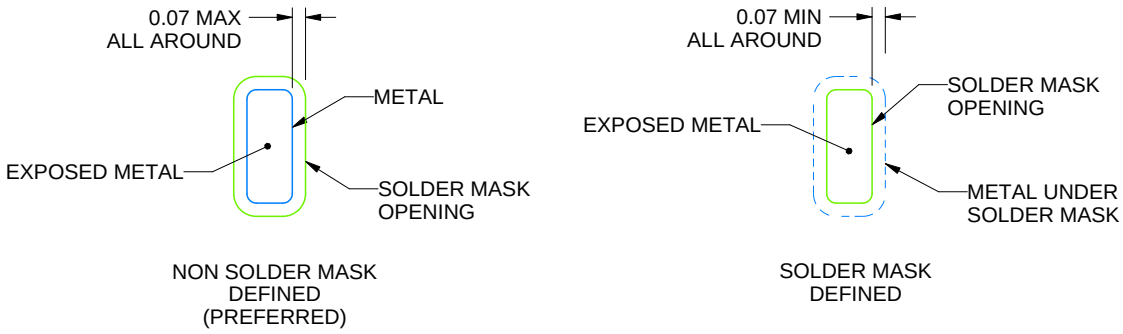

SOLDER MASK DETAILS

4219046/B 11/2019

NOTES: (continued)

4. This package is designed to be soldered to a thermal pad on the board. For more information, see Texas Instruments literature number SLUA271 (www.ti.com/lit/slua271).
5. Vias are optional depending on application, refer to device data sheet. If any vias are implemented, refer to their locations shown on this view. It is recommended that vias under paste be filled, plugged or tented.

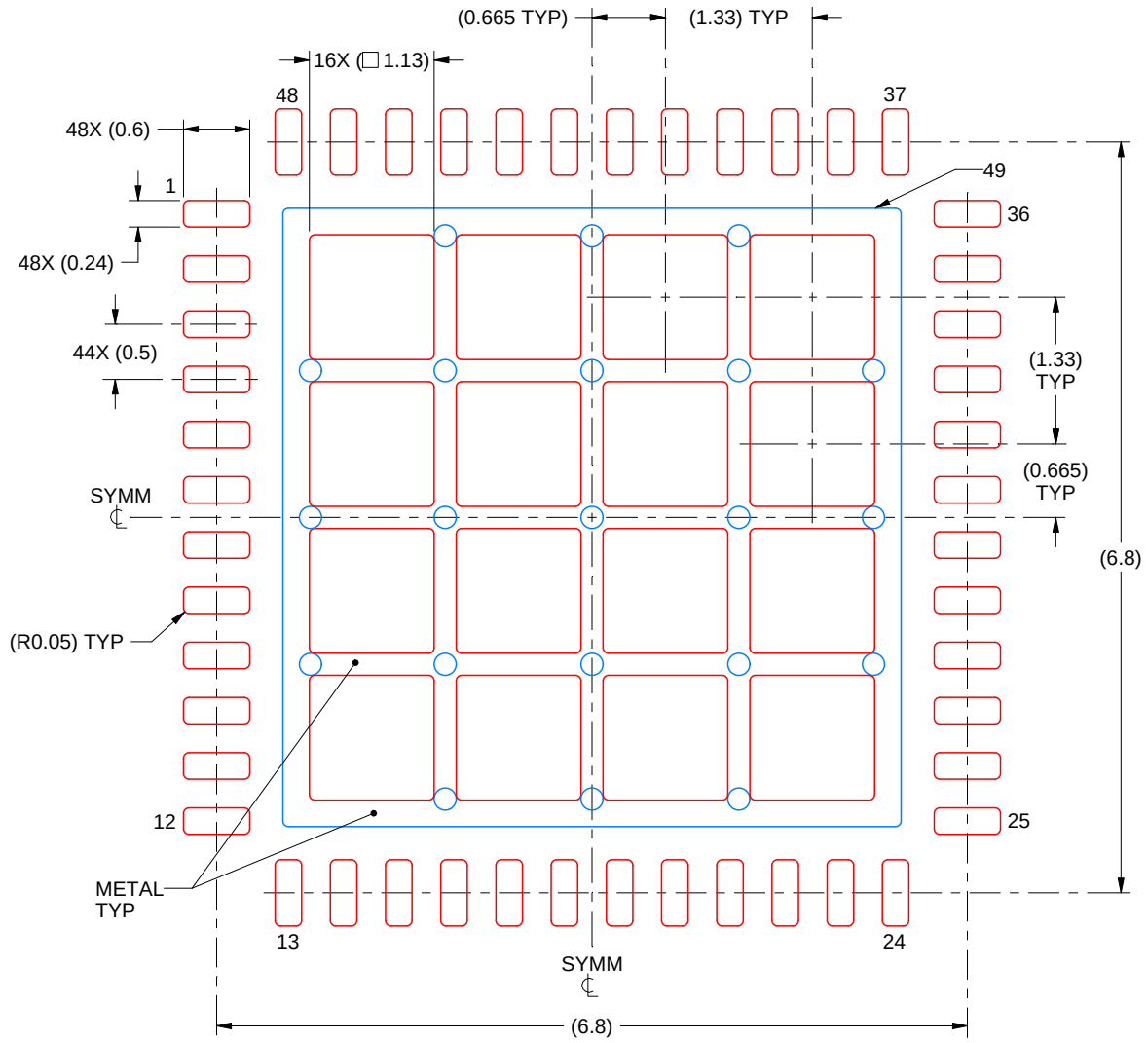

SOLDER PASTE EXAMPLE
BASED ON 0.125 mm THICK STENCIL

EXPOSED PAD 49
66% PRINTED SOLDER COVERAGE BY AREA UNDER PACKAGE
SCALE:15X

4219046/B 11/2019

NOTES: (continued)

6. Laser cutting apertures with trapezoidal walls and rounded corners may offer better paste release. IPC-7525 may have alternate design recommendations.

IMPORTANT NOTICE AND DISCLAIMER

TI PROVIDES TECHNICAL AND RELIABILITY DATA (INCLUDING DATASHEETS), DESIGN RESOURCES (INCLUDING REFERENCE DESIGNS), APPLICATION OR OTHER DESIGN ADVICE, WEB TOOLS, SAFETY INFORMATION, AND OTHER RESOURCES “AS IS” AND WITH ALL FAULTS, AND DISCLAIMS ALL WARRANTIES, EXPRESS AND IMPLIED, INCLUDING WITHOUT LIMITATION ANY IMPLIED WARRANTIES OF MERCHANTABILITY, FITNESS FOR A PARTICULAR PURPOSE OR NON-INFRINGEMENT OF THIRD PARTY INTELLECTUAL PROPERTY RIGHTS.

These resources are intended for skilled developers designing with TI products. You are solely responsible for (1) selecting the appropriate TI products for your application, (2) designing, validating and testing your application, and (3) ensuring your application meets applicable standards, and any other safety, security, regulatory or other requirements.

These resources are subject to change without notice. TI grants you permission to use these resources only for development of an application that uses the TI products described in the resource. Other reproduction and display of these resources is prohibited. No license is granted to any other TI intellectual property right or to any third party intellectual property right. TI disclaims responsibility for, and you fully indemnify TI and its representatives against any claims, damages, costs, losses, and liabilities arising out of your use of these resources.

TI’s products are provided subject to TI’s Terms of Sale, TI’s General Quality Guidelines, or other applicable terms available either on ti.com or provided in conjunction with such TI products. TI’s provision of these resources does not expand or otherwise alter TI’s applicable warranties or warranty disclaimers for TI products. Unless TI explicitly designates a product as custom or customer-specified, TI products are standard, catalog, general purpose devices.

TI objects to and rejects any additional or different terms you may propose.

Copyright © 2026, Texas Instruments Incorporated

Last updated 10/2025

Looking for pricing, stock, or lifecycle information?

Click below to explore more details on WIN SOURCE:

- View O917A151TRGZRQ1 on WIN SOURCE
- Texas Instruments Information

Optimize Your Supply Chain with WIN SOURCE Solutions

- Global Sourcing Solution
- Obsolete Management
- Cost Control Management
- Shortage Management
- Alternative Solution
- Excess Inventory Management