AM654x, AM652x Sitara™ Processors Silicon Revision 2.1

1 Features

Processor cores:

- Dual- or quad-core Arm® Cortex®-A53 microprocessor subsystem at up to 1.1 GHz
  - Up to two dual-core or two single-core Arm® Cortex®-A53 clusters with 512KB L2 cache including SECDED
  - Each A53 core has 32KB L1 ICache and 32K L1 DCache
- Dual-core Arm® Cortex®-R5F at up to 400 MHz
  - Supports lockstep mode
  - 16KB ICache, 16KB DCache, and 64KB RAM per R5F core

Industrial subsystem:

- Three gigabit Industrial Communication Subsystems (PRU_ICSSG)
  - Up to two 10/100/1000 Ethernet ports per PRU_ICSSG
  - Supports two SGMII ports[(2)]
  - Compatibility with 10/100Mb PRU-ICSS
  - 24× PWMs per PRU_ICSSG
    - Cycle-by-cycle control
    - Enhanced trip control
  - 18× Sigma-delta filters per PRU_ICSSG
    - Short circuit logic
    - Over-current logic
  - 6× Multi-protocol position encoder interfaces per PRU_ICSSG

Memory subsystem:

- Up to 2MB of on-chip L3 RAM with SECDED
- Multi-core Shared Memory Controller (MSMC)
  - Up to 2MB (2 banks × 1MB) SRAM with SECDED
    - Shared coherent Level 2 or Level 3 memory-mapped SRAM
    - Shared coherent Level 3 Cache
  - 256-bit processor port bus and 40-bit physical address bus
  - Coherent unified bi-directional interfaces to connect to processors or device masters
  - L2, L3 Cache pre-warming and post flushing
  - Bandwidth management with starvation bound
  - One infrastructure master interface
  - Single external memory master interface
  - Supports distributed virtual system
  - Supports internal DMA engine – Data Routing Unit (DRU)
  - ECC error protection
- DDR Subsystem (DDRSS)
  - Supports DDR4 memory types up to DDR-1600
  - 32-bit data bus and 7-bit SECDED bus
  - 8 GB of total addressable space
- General-Purpose Memory Controller (GPMC)

Functional Safety:

- Functional Safety-Compliant [Industrial]
  - Developed for functional safety applications
  - Documentation available to aid IEC 61508 functional safety system design
  - Systematic capability up to SIL 3
  - Hardware Integrity up to SIL 2
  - Safety-related certification
    - IEC 61508 certified by TÜV SÜD
- Functional safety features:
  - ECC or parity on calculation-critical memories and internal bus interconnect
  - Firewalls to help provide Freedom From Interference (FFI)
    - Built-In Self-Test (BIST) for CPU, high-end timers, and on-chip RAM
  - Hardware error injection support for test-for-diagnostics
  - Error Signaling Modules (ESM) for capture of functional safety related errors
  - Voltage, temperature, and clock monitoring
  - Windowed and non-windowed watchdog timers in multiple clock domains
- MCU island
  - Isolation of the dual-core Arm® Cortex®-R5F microprocessor subsystem
  - Separate voltage, clocks, resets, and dedicated peripherals
  - Internal MCSPI connection to the rest of SoC

Security:

- Secure boot supported
  - Hardware-enforced root-of-trust
  - Support to switch root-of-trust via backup key
  - Support for takeover protection, IP protection, and anti-roll back protection
- Cryptographic acceleration supported
  - Session-aware cryptographic engine with ability to auto-switch key-material based on incoming data stream
  - Supports cryptographic cores
    - AES – 128/192/256 bits key sizes
    - 3DES – 56/112/168 bits key sizes
    - MD5, SHA1

An IMPORTANT NOTICE at the end of this data sheet addresses availability, warranty, changes, use in safety-critical applications, intellectual property matters and other important disclaimers. PRODUCTION DATA.

    - SHA2 – 224/256/384/512
    - DRBG with true random number generator
    - PKA (public key accelerator) to assist in RSA/ECC processing
  - DMA support
- Debugging security
  - Secure software-controlled debug access
  - Security aware debugging
- Trusted Execution Environment (TEE) supported
  - Arm® TrustZone® based TEE
  - Extensive firewall support for isolation
  - Secure DMA path and interconnect
  - Secure watchdog/timer/IPC
- Secure storage support
- On-the-fly encryption and authentication support for OSPI interface
- Networking security support for data (payload) encryption/authentication via packet based hardware cryptographic engine
- Security coprocessor (DMSC) for key and security management, with dedicated device level interconnect for security software

SoC services:

- Device Management Security Controller (DMSC)
  - Centralized SoC system controller
  - Manages system services including initial boot, security, functional safety and clock/reset/power management
  - Power management controller for active and low power modes
  - Communication with various processing units over message manager
  - Simplified interface for optimizing unused peripherals
  - Tracing and debugging capability
- Sixteen 32-bit general-purpose timers
- Two data movement and control Navigator Subsystems (NAVSS)
  - Ring Accelerator (RA)
  - Unified DMA (UDMA)
  - Up to 2 Timer Managers (TM) (1024 timers each)

Multimedia:

- Display subsystem
  - Two fully input-mapped overlay managers associated with two display outputs
  - One port MIPI® DPI parallel interface
  - One port OLDI
- PowerVR® SGX544-MP1 3D Graphics Processing Unit (GPU)
- One Camera Serial Interface-2 (MIPI CSI-2)
- One port video capture: BT.656/1120 (no embedded sync)

High-speed interfaces:

- One Gigabit Ethernet (CPSW) interface supporting
  - RMII (10/100) or RGMII (10/100/1000)
  - IEEE1588 (2008 Annex D, Annex E, Annex F) with 802.1AS PTP
  - Audio/video bridging (P802.1Qav/D6.0)
  - Energy-efficient Ethernet (802.3az)
  - Jumbo frames (2024 bytes)
  - Clause 45 MDIO PHY management
- Two PCI-Express® (PCIe®) revision 3.1 subsystems[(2)]
  - Supports Gen2 (5.0GT/s) operation
  - Two independent 1-lane, or a single 2-lane port
  - Support for concurrent root-complex and end-point operation
- USB 3.1 Dual-Role Device (DRD) subsystem[(2)]
  - One enhanced SuperSpeed Gen1 port
  - One USB 2.0 port
  - Each port independently configurable as USB host, USB peripheral, or USB DRD

General connectivity:

- 6× Inter-Integrated Circuit (I2C™) ports
- 5× configurable UART/IrDA/CIR modules
- Two simultaneous flash interfaces configured as
  - Two OSPI flash interfaces
  - or HyperBus™ and OSPI1 flash interface
- 2× 12-bit Analog-to-Digital Converters (ADC)
  - Up to 4 Msamples/s
  - Eight multiplexed analog inputs
- 8× Multichannel Serial Peripheral Interfaces (MCSPI) controllers
  - Two with internal connections
  - Six with external interfaces
- General-Purpose I/O (GPIO) pins

Control interfaces:

- 6× Enhanced High-Resolution Pulse-Width Modulator (EHRPWM) modules
- One Enhanced Capture (ECAP) module
- 3× Enhanced Quadrature Encoder Pulse (EQEP) modules

Automotive interfaces:

- 2× Modular Controller Area Network (MCAN) modules with full CAN-FD support

Audio interfaces:

- 3× Multichannel Audio Serial Port (MCASP) modules

Media and data storage:

- 2× Multimedia Card™/ Secure Digital® (MMC™/ SD®) interfaces

Copyright © 2023 Texas Instruments Incorporated

Simplified power management:

- Simplified power sequence with full support for dual voltage I/O
- Integrated LDOs reduces power solution complexity
- Integrated SDIO LDO for handling automatic voltage transition for SD interface
- Integrated Power On Reset (POR) generation reducing power solution complexity
- Integrated voltage supervisor for functional safety monitoring
- Integrated power supply glitch detector for detecting fast power supply transients

Analog/system integration:

- Integrated USB VBUS detection
- Fail safe I/O for DDR RESET
- All I/O pins drivers disabled during reset to avoid bus conflicts
- Default I/O pulls disabled during reset to avoid system conflicts
- Support dynamic I/O pinmux configuration change

System-on-Chip (SoC) architecture:

- Supports primary boot from UART, I2C, OSPI, HyperBus, parallel NOR Flash, SD or eMMC™, USB, PCIe, and Ethernet interfaces
- 28-nm CMOS technology
- 23 mm × 23 mm, 0.8-mm pitch, 784-pin FCBGA (ACD)

2 Applications

- Industrial Programmable Logic Controllers (PLC)
- Factory automation with safety functions
- Multi-protocol fieldbus communications
- Industrial PC
- Industrial robots
- Human Machine Interface (HMI)
- Grid infrastructure protection relays
- Robotic motor drives

Copyright © 2023 Texas Instruments Incorporated

3 Description

AM654x and AM652x Sitara™ processors are Arm® applications processors built to meet the complex processing needs of modern industry 4.0 embedded products.

The AM654x and AM652x devices combine four or two Arm® Cortex®-A53 cores with a dual Arm® Cortex®-R5F MCU subsystem which includes features intended to help customers achieve their functional safety goals for their end products and three Gigabit industrial communications subsystems (PRU_ICSSG) to create a SoC capable of high-performance industrial controls with industrial connectivity and processing for functional safety applications. AM65xx is currently undergoing assessment to be certified by TÜV SÜD according to IEC 61508.

The four Arm® Cortex®-A53 cores in the AM654x are arranged in two dual-core clusters with shared L2 memory to create two processing channels. The two Arm® Cortex®-A53 cores in the AM652x are available in a single dual-core cluster and two single-core cluster options. Extensive ECC is included on on-chip memory, peripherals, and interconnect for reliability. The SoC as a whole includes features intended to help customers design systems that can achieve their functional safety goals (assessment pending with TÜV SÜD). Cryptographic acceleration and secure boot are available on some AM654x and AM652x devices in addition to granular firewalls managed by the DMSC.

Programmability is provided by the Arm® Cortex®-A53 RISC CPUs with Arm® Neon™ extension, and the dual Arm® Cortex®-R5F MCU subsystem is available for general purpose use as two cores or it can be used in lockstep to help meet the needs of functional safety applications. The PRU_ICSSG subsystems can be used to provide up to six ports of industrial Ethernet such as Profinet IRT, TSN, Ethernet/IP or EtherCAT® (among many others), or they can be used for standard Gigabit Ethernet connectivity.

TI provides a complete set of software and development tools for the Arm® cores including Processor SDK Linux, Linux-RT, RTOS, and Android as well as C compilers and a debugging interface for visibility into source code execution. Applicable functional safety and security documentation will be made available to assist customers in developing their functional safety or security related systems.

Package Information

PART NUMBER	PACKAGE(1)	PACKAGE SIZE(2)
AM6548	ACD (FCBGA, 784)	23.0 mm × 23.0 mm
AM6528	ACD (FCBGA, 784)	23.0 mm × 23.0 mm
AM6546	ACD (FCBGA, 784)	23.0 mm × 23.0 mm
AM6526	ACD (FCBGA, 784)	23.0 mm × 23.0 mm

(1) For more information, see Section 11, *Mechanical, Packaging, and Orderable Information*
(2) The package size (length × width) is a nominal value and includes pins, where applicable.

Copyright © 2023 Texas Instruments Incorporated

3.1 Functional Block Diagram

Figure 3-1 is functional block diagram for the device.

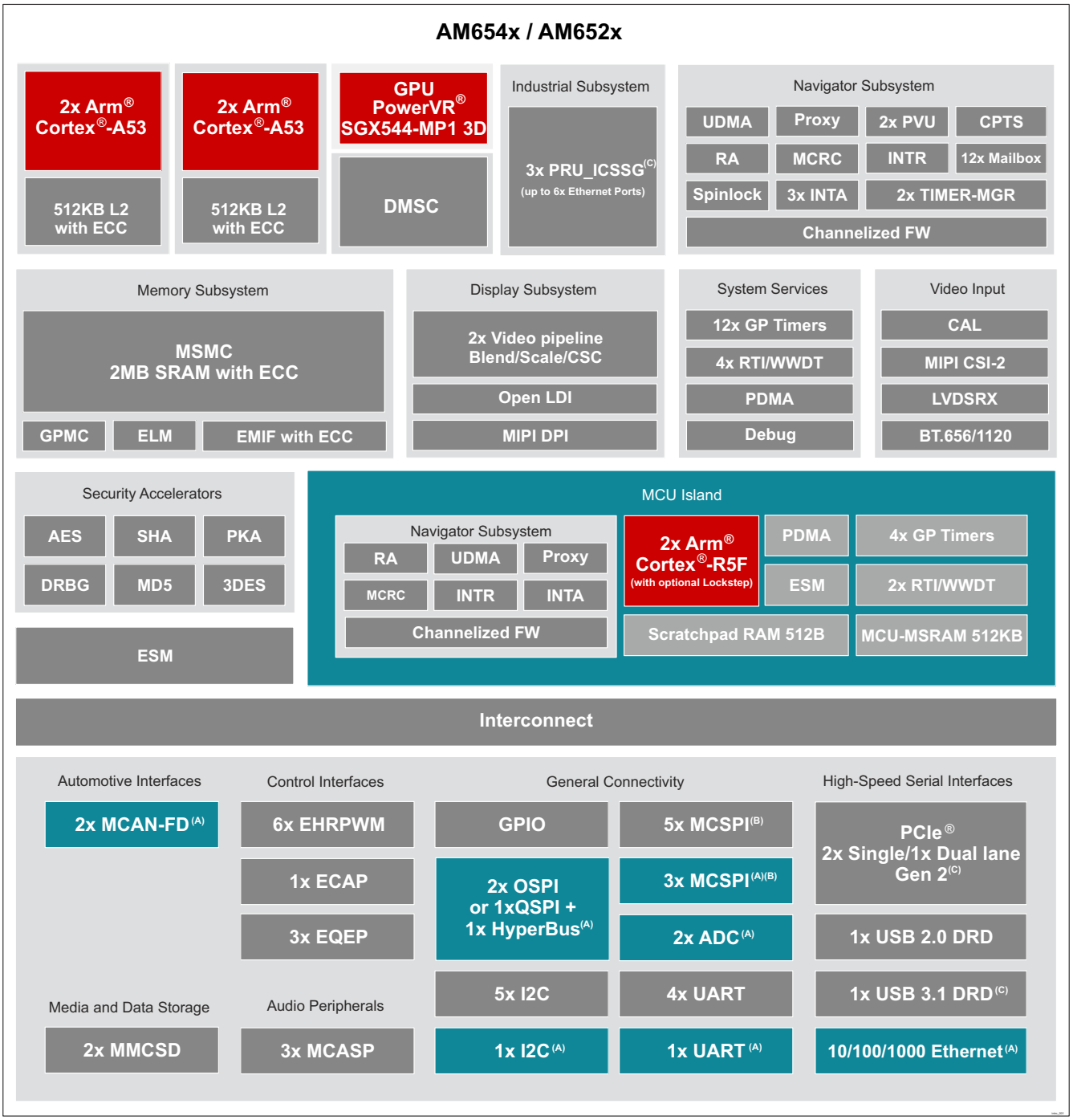

A. This interface is located on the MCU Island but is available for the full system to access.
B. One port is internally connected only; not connected to any pins.
C. SGMII, USB3.1 and PCIe share a total of two SerDes lanes.

Figure 3-1. AM654x, AM652x Block Diagram

Table of Contents

1 Features....1
2 Applications....3
3 Description....4
3.1 Functional Block Diagram....5
4 Device Comparison....7
4.1 Related Products....8
5 Terminal Configuration and Functions....9
5.1 Pin Diagram....9
5.2 Pin Attributes....10
5.3 Signal Descriptions....59
5.4 Pin Multiplexing....107
5.5 Connections for Unused Pins....119
6 Specifications....122
6.1 Absolute Maximum Ratings....122
6.2 ESD Ratings....124
6.3 Power-On Hours (POH)....125
6.4 Recommended Operating Conditions....125
6.5 Operating Performance Points....128
6.6 Electrical Characteristics....130
6.7 VPP Specifications for One-Time Programmable (OTP) eFuses....137
6.8 Thermal Resistance Characteristics....138
6.9 Timing and Switching Characteristics....139
7 Detailed Description....246
7.1 Overview....246
7.2 Processor Subsystems....247
7.3 Accelerators and Coprocessors....248
7.4 Other Subsystems....250
7.5 Identification....257
7.6 Boot Modes....258
8 Applications, Implementation, and Layout....259
8.1 Device Connection and Layout Fundamentals....259
8.2 Peripheral- and Interface-Specific Design Information....260
9 Device and Documentation Support....270
9.1 Device Nomenclature....270
9.2 Tools and Software....272
9.3 Documentation Support....273
9.4 Support Resources....273
9.5 Trademarks....273
9.6 Electrostatic Discharge Caution....274
9.7 Glossary....274
10 Revision History....274
11 Mechanical, Packaging, and Orderable Information....275
11.1 Packaging Information....275

Copyright © 2023 Texas Instruments Incorporated

4 Device Comparison

Table 4-1 shows a comparison between devices, highlighting the differences.

Table 4-1. Device Comparison

FEATURES	REFERENCE NAME	AM6548	AM6528	AM6546	AM6526
FEATURES					
CTRLMMR_WKUP_JTAG_DEVICE_ID [31:11] DEVICE_ID register bit field value[5]		AM6548: 0x140FA	AM6528: 0x140BA	AM6546: 0x14178	AM6526: 0x14138
		AM6548-E: 0x140FB	AM6528-E: 0x140BB	AM6546-E: 0x14179	AM6526-E: 0x14139
		AM6548-F: 0x140FE	AM6528-F: 0x140BE	AM6546-F: 0x1417C	AM6526-F: 0x1413C
		AM6548-E,F: 0x140FF	AM6528-E,F: 0x140BF	AM6546-E,F: 0x1417D	AM6526-E,F: 0x1413D
PROCESSORS AND ACCELERATORS					
Speed Grades		See Table 6-1, *Speed Grade Maximum Frequency*			
Arm Cortex-A53 Microprocessor Subsystem	Arm A53	Quad Core (Cluster 0, Cluster 1)	Dual Core (Cluster 0)	Quad Core (Cluster 0, Cluster 1)	Dual Core (Cluster 0)
Dual-Core Arm Cortex-R5F	Arm R5F	Yes (optional lockstep[4])			
Device Management Security Controller	DMSC	Yes			
Graphics Accelerator (SGX544-MP1)	GPU	Yes		Not Supported[1]	
Safety Features	Safety	Optional[4]		Optional[4]	
PROGRAM AND DATA STORAGE					
On-Chip Shared Memory (RAM)	MCU_MSRAM	512KB			
Multicore Shared Memory Controller	MSMC	2MB (On-Chip Shared SRAM with ECC)			
DDR4 DDR Subsystem[6]	DDRSS	Up to 8GB (32-Bit data)			
	SECDED	7-Bit			
General-Purpose Memory Controller	GPMC	Up to 1GB with ECC			
Error Location Module	ELM	Yes			
PERIPHERALS					
Display Subsystem	DSS	Yes			
Modular Controller Area Network Interface	MCAN	2			
Peripheral Direct Memory Access	PDMA	Yes			
Navigator Subsystem	NAVSS	2			
General-Purpose I/O	GPIO	Up to 242			
Inter-Integrated Circuit Interface	I2C	6			
Analog-to-Digital Converter	ADC	2			
Camera Adaptation Layer (CAL) with Camera Serial Interface (CSI2) and Video Input Port (VIN)	CSI2	1 CLK + 4 Data			
	VIN0	Yes			
Multichannel Serial Peripheral Interface	MCSPI	8			
Multichannel Audio Serial Port	MCASP0	16 Serializers			
	MCASP1	10 Serializers			
	MCASP2	4 Serializers			
MultiMedia Card/ Secure Digital Interface	MMCSD0	8-bits			
	MMCSD1	4-bits			

Copyright © 2023 Texas Instruments Incorporated

Table 4-1. Device Comparison (continued)

FEATURES	REFERENCE NAME	AM6548	AM6528	AM6546	AM6526
FEATURES					
Flash Subsystem (FSS)	OSPI0	8-bits[3]			
	OSPI1	4-bits			
	HyperBus	Not Supported[1]			
Security Accelerator	SA	Yes			
Error Signalling Module	ESM	Yes			
2x PCI Express 3.1 Port with Integrated PHY	PCIE0	Up to Two Lanes[2]			
	PCIE1	Single Lane[2]			
3x Programmable Real-Time Unit Subsystem and Industrial Communication Subsystem	PRU_ICSSG0	Yes (2× RGMII, 2× MII)			
	PRU_ICSSG1	Yes (2× RGMII, 2× MII)			
	PRU_ICSSG2	Yes (2× RGMII, 2× MII, 2× SGMII[2])			
Gigabit Ethernet Interface	CPSW	RMII or RGMII			
General-Purpose Timers	TIMER	16			
Enhanced High Resolution Pulse-Width Modulator Module	EHRPWM	6			
Enhanced Capture Module	ECAP	1			
Enhanced Quadrature Encoder Pulse Module	EQEP	3			
Universal Asynchronous Receiver and Transmitter	UART	5			
Universal Serial Bus (USB3.1) SuperSpeed Dual-Role-Device (DRD) Ports with SS PHY	USB0	Yes[2]			
Universal Serial Bus (USB2.0) HighSpeed Dual-Role-Device (DRD) Ports with HS/FS PHY	USB1	Yes			

(1) Features noted as “not supported”, must not be used. Their functionality is not supported by TI for this family of devices. These features are subject to removal without notice on future device revisions. Any information regarding the unsupported features has been retained in the documentation solely for the purpose of clarifying signal names or for consistency with previous feature descriptions.
(2) SGMII0, SGMII1, USB3.1, PCIE0, and PCIE1 share total of two SerDes lanes.
(3) Two simultaneous flash interfaces configured as OSPI0 and OSPI1, or HyperBus and OSPI1.
(4) Device supports features to aid in functional safety system designs such as lockstep Arm R5F if the part number is designated with the F option.
(5) For more details about the CTRLMMR_WKUP_JTAG_DEVICE_ID register and DEVICE_ID bit field, see the device TRM.
(6) Only DDR4 is supported. DDR3L and LPDDR4 are not supported.

4.1 Related Products

Sitara™ processors	Scalable processors based on Arm Cortex-A cores with flexible peripherals, connectivity & unified software support – perfect for sensors to servers.
Sitara™ processors – Applications	Sitara processors provide scalable solutions for a wide range of applications from HMIs and gateways to more complex equipment such as drives and substation automation equipment. Sitara Arm processors offer scalability and reliability as well as multi-protocol support for industrial communication protocols such as EtherCAT, Ethernet/IP and Profinet.
Sitara™ processors – Reference designs	TI provides many reference designs containing ‘building block’ solutions to enable customers to rapidly development of their unique products and solutions.
Companion Products for AM654x, AM652x	Review products that are frequently purchased or used in conjunction with this product.

Copyright © 2023 Texas Instruments Incorporated

5 Terminal Configuration and Functions

5.1 Pin Diagram

Note

The terms "ball", "pin", and "terminal" are used interchangeably throughout the document. An attempt is made to use "ball" only when referring to the physical package.

Figure 5-1 shows the ball locations for the 784 plastic ball grid array (FCBGA) package that are used in conjunction with Table 5-1 through Figure 5-1 to locate signal names and ball grid numbers.

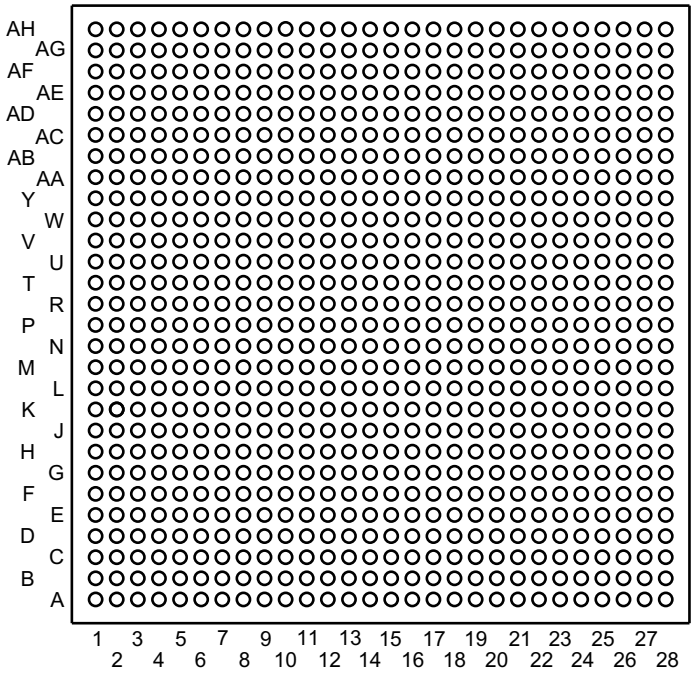

Figure 5-1. ACD FCBGA-N784 Package (Bottom View)

Copyright © 2023 Texas Instruments Incorporated

5.2 Pin Attributes

Table 5-1 describes the terminal characteristics and the signals multiplexed on each ball.

Table 5-1. Pin Attributes

BALL NUMBER [1]	BALL NAME [2]	SIGNAL NAME [3]	MUXMODE [4]	TYPE [5]	BALL RESET STATE [6]	BALL RESET REL. MUXMODE [7]	I/O VOLTAGE VALUE [8]	POWER [9]	HYS [10]	BUFFER TYPE [11]	PULL UP/ DOWN TYPE [12]	DSIS [13]	RXACTIVE / TXDISABLE [14]	IO Daisy Chain [15]
P17	CAP_VDDAR_CORE0	CAP_VDDAR_CORE0		CAP										
V17	CAP_VDDAR_CORE1	CAP_VDDAR_CORE1		CAP										
W16	CAP_VDDAR_CORE2	CAP_VDDAR_CORE2		CAP										
M14	CAP_VDDAR_CORE3	CAP_VDDAR_CORE3		CAP										
L15	CAP_VDDAR_CORE4	CAP_VDDAR_CORE4		CAP										
U10	CAP_VDDAR_MCU	CAP_VDDAR_MCU		CAP										
M12	CAP_VDDAR_MPU0_0	CAP_VDDAR_MPU0_0		CAP										
N12	CAP_VDDAR_MPU0_1	CAP_VDDAR_MPU0_1		CAP										
N18	CAP_VDDAR_MPU1_0	CAP_VDDAR_MPU1_0		CAP										
N15	CAP_VDDAR_MPU1_1	CAP_VDDAR_MPU1_1		CAP										
Y10	CAP_VDDAR_WKUP	CAP_VDDAR_WKUP		CAP										
AA8	CAP_VDDA_1P8_IOLDO_WKUP	CAP_VDDA_1P8_IOLDO_WKUP		CAP										
J17	CAP_VDDA_1P8_SDIO	CAP_VDDA_1P8_SDIO		CAP										
G19	CAP_VDDA_1P8_IOLDO0	CAP_VDDA_1P8_IOLDO0		CAP										
Y19	CAP_VDDA_1P8_IOLDO1	CAP_VDDA_1P8_IOLDO1		CAP										
H18	CAP_VDDSHV_SDIO	CAP_VDDSHV_SDIO		CAP										
V9	CAP_VDD_WKUP	CAP_VDD_WKUP		CAP										
G28	CSI0_RXN0	CSI0_RXN0		I	PD		1.8 V	VDDA_1P8_CSI0		DPHY	PU/PD			No
H27	CSI0_RXN1	CSI0_RXN1		I	PD		1.8 V	VDDA_1P8_CSI0		DPHY	PU/PD			No
F26	CSI0_RXN2	CSI0_RXN2		I	PD		1.8 V	VDDA_1P8_CSI0		DPHY	PU/PD			No
H25	CSI0_RXN3	CSI0_RXN3		I	PD		1.8 V	VDDA_1P8_CSI0		DPHY	PU/PD			No
G24	CSI0_RXN4	CSI0_RXN4		I	PD		1.8 V	VDDA_1P8_CSI0		DPHY	PU/PD			No
F28	CSI0_RXP0	CSI0_RXP0		I	PD		1.8 V	VDDA_1P8_CSI0		DPHY	PU/PD			No
G27	CSI0_RXP1	CSI0_RXP1		I	PD		1.8 V	VDDA_1P8_CSI0		DPHY	PU/PD			No
G26	CSI0_RXP2	CSI0_RXP2		I	PD		1.8 V	VDDA_1P8_CSI0		DPHY	PU/PD			No
G25	CSI0_RXP3	CSI0_RXP3		I	PD		1.8 V	VDDA_1P8_CSI0		DPHY	PU/PD			No
F24	CSI0_RXP4	CSI0_RXP4		I	PD		1.8 V	VDDA_1P8_CSI0		DPHY	PU/PD			No

Copyright © 2023 Texas Instruments Incorporated

Table 5-1. Pin Attributes (continued)

BALL NUMBER [1]	BALL NAME [2]	SIGNAL NAME [3]	MUXMODE [4]	TYPE [5]	BALL RESET STATE [6]	BALL RESET REL. MUXMODE [7]	I/O VOLTAGE VALUE [8]	POWER [9]	HYS [10]	BUFFER TYPE [11]	PULL UP/ DOWN TYPE [12]	DSIS [13]	RXACTIVE / TXDISABLE [14]	IO Daisy Chain [15]
A10	DDR_AC0	DDR_AC0		IO	OFF		1.1 V/1.2 V/1.35 V	VDDS_DDR		DDR	PU/PD			No
D9	DDR_AC1	DDR_AC1		IO	OFF		1.1 V/1.2 V/1.35 V	VDDS_DDR		DDR	PU/PD			No
C9	DDR_AC2	DDR_AC2		IO	OFF		1.1 V/1.2 V/1.35 V	VDDS_DDR		DDR	PU/PD			No
E9	DDR_AC3	DDR_AC3		IO	OFF		1.1 V/1.2 V/1.35 V	VDDS_DDR		DDR	PU/PD			No
A9	DDR_AC4	DDR_AC4		IO	OFF		1.1 V/1.2 V/1.35 V	VDDS_DDR		DDR	PU/PD			No
E8	DDR_AC5	DDR_AC5		IO	OFF		1.1 V/1.2 V/1.35 V	VDDS_DDR		DDR	PU/PD			No
F8	DDR_AC6	DDR_AC6		IO	OFF		1.1 V/1.2 V/1.35 V	VDDS_DDR		DDR	PU/PD			No
C7	DDR_AC7	DDR_AC7		IO	OFF		1.1 V/1.2 V/1.35 V	VDDS_DDR		DDR	PU/PD			No
C8	DDR_AC8	DDR_AC8		IO	OFF		1.1 V/1.2 V/1.35 V	VDDS_DDR		DDR	PU/PD			No
D7	DDR_AC9	DDR_AC9		IO	OFF		1.1 V/1.2 V/1.35 V	VDDS_DDR		DDR	PU/PD			No
E7	DDR_AC10	DDR_AC10		IO	OFF		1.1 V/1.2 V/1.35 V	VDDS_DDR		DDR	PU/PD			No
A6	DDR_AC11	DDR_AC11		IO	OFF		1.1 V/1.2 V/1.35 V	VDDS_DDR		DDR	PU/PD			No
F7	DDR_AC12	DDR_AC12		IO	OFF		1.1 V/1.2 V/1.35 V	VDDS_DDR		DDR	PU/PD			No
D6	DDR_AC13	DDR_AC13		IO	OFF		1.1 V/1.2 V/1.35 V	VDDS_DDR		DDR	PU/PD			No
C6	DDR_AC14	DDR_AC14		IO	OFF		1.1 V/1.2 V/1.35 V	VDDS_DDR		DDR	PU/PD			No
F6	DDR_AC15	DDR_AC15		IO	OFF		1.1 V/1.2 V/1.35 V	VDDS_DDR		DDR	PU/PD			No
E6	DDR_AC16	DDR_AC16		IO	OFF		1.1 V/1.2 V/1.35 V	VDDS_DDR		DDR	PU/PD			No
E5	DDR_AC17	DDR_AC17		IO	OFF		1.1 V/1.2 V/1.35 V	VDDS_DDR		DDR	PU/PD			No
D8	DDR_AC18	DDR_AC18		IO	OFF		1.1 V/1.2 V/1.35 V	VDDS_DDR		DDR	PU/PD			No
D10	DDR_AC19	DDR_AC19		IO	OFF		1.1 V/1.2 V/1.35 V	VDDS_DDR		DDR	PU/PD			No
E10	DDR_AC20	DDR_AC20		IO	OFF		1.1 V/1.2 V/1.35 V	VDDS_DDR		DDR	PU/PD			No
C10	DDR_AC21	DDR_AC21		IO	OFF		1.1 V/1.2 V/1.35 V	VDDS_DDR		DDR	PU/PD			No
F11	DDR_AC22	DDR_AC22		IO	OFF		1.1 V/1.2 V/1.35 V	VDDS_DDR		DDR	PU/PD			No

Copyright © 2023 Texas Instruments Incorporated

Table 5-1. Pin Attributes (continued)

BALL NUMBER [1]	BALL NAME [2]	SIGNAL NAME [3]	MUXMODE [4]	TYPE [5]	BALL RESET STATE [6]	BALL RESET REL. MUXMODE [7]	I/O VOLTAGE VALUE [8]	POWER [9]	HYS [10]	BUFFER TYPE [11]	PULL UP/ DOWN TYPE [12]	DSIS [13]	RXACTIVE / TXDISABLE [14]	IO Daisy Chain [15]
B10	DDR_AC23	DDR_AC23		IO	OFF		1.1 V/1.2 V/1.35 V	VDDS_DDR		DDR	PU/PD			No
D11	DDR_AC24	DDR_AC24		IO	OFF		1.1 V/1.2 V/1.35 V	VDDS_DDR		DDR	PU/PD			No
B11	DDR_AC25	DDR_AC25		IO	OFF		1.1 V/1.2 V/1.35 V	VDDS_DDR		DDR	PU/PD			No
C11	DDR_AC26	DDR_AC26		IO	OFF		1.1 V/1.2 V/1.35 V	VDDS_DDR		DDR	PU/PD			No
E11	DDR_AC27	DDR_AC27		IO	OFF		1.1 V/1.2 V/1.35 V	VDDS_DDR		DDR	PU/PD			No
E12	DDR_AC28	DDR_AC28		IO	OFF		1.1 V/1.2 V/1.35 V	VDDS_DDR		DDR	PU/PD			No
D12	DDR_AC29	DDR_AC29		IO	OFF		1.1 V/1.2 V/1.35 V	VDDS_DDR		DDR	PU/PD			No
D5	DDR_ALERTn	DDR_ALERTn		IO	OFF		1.1 V/1.2 V/1.35 V	VDDS_DDR		DDR	PU/PD			No
B8	DDR_CK0N	DDR_CK0N		IO	drive 1 (OFF)		1.1 V/1.2 V/1.35 V	VDDS_DDR		DDR	PU/PD			No
A8	DDR_CK0P	DDR_CK0P		IO	drive 0 (OFF)		1.1 V/1.2 V/1.35 V	VDDS_DDR		DDR	PU/PD			No
B7	DDR_CK1N	DDR_CK1N		IO	drive 1 (OFF)		1.1 V/1.2 V/1.35 V	VDDS_DDR		DDR	PU/PD			No
A7	DDR_CK1P	DDR_CK1P		IO	drive 0 (OFF)		1.1 V/1.2 V/1.35 V	VDDS_DDR		DDR	PU/PD			No
E1	DDR_DM0	DDR_DM0		IO	OFF		1.1 V/1.2 V/1.35 V	VDDS_DDR		DDR	PU/PD			No
C5	DDR_DM1	DDR_DM1		IO	OFF		1.1 V/1.2 V/1.35 V	VDDS_DDR		DDR	PU/PD			No
D14	DDR_DM2	DDR_DM2		IO	OFF		1.1 V/1.2 V/1.35 V	VDDS_DDR		DDR	PU/PD			No
B17	DDR_DM3	DDR_DM3		IO	OFF		1.1 V/1.2 V/1.35 V	VDDS_DDR		DDR	PU/PD			No
A3	DDR_DQ0	DDR_DQ0		IO	OFF		1.1 V/1.2 V/1.35 V	VDDS_DDR		DDR	PU/PD			No
B2	DDR_DQ1	DDR_DQ1		IO	OFF		1.1 V/1.2 V/1.35 V	VDDS_DDR		DDR	PU/PD			No
C2	DDR_DQ2	DDR_DQ2		IO	OFF		1.1 V/1.2 V/1.35 V	VDDS_DDR		DDR	PU/PD			No
D2	DDR_DQ3	DDR_DQ3		IO	OFF		1.1 V/1.2 V/1.35 V	VDDS_DDR		DDR	PU/PD			No
E2	DDR_DQ4	DDR_DQ4		IO	OFF		1.1 V/1.2 V/1.35 V	VDDS_DDR		DDR	PU/PD			No
G1	DDR_DQ5	DDR_DQ5		IO	OFF		1.1 V/1.2 V/1.35 V	VDDS_DDR		DDR	PU/PD			No
F2	DDR_DQ6	DDR_DQ6		IO	OFF		1.1 V/1.2 V/1.35 V	VDDS_DDR		DDR	PU/PD			No

Copyright © 2023 Texas Instruments Incorporated

Table 5-1. Pin Attributes (continued)

BALL NUMBER [1]	BALL NAME [2]	SIGNAL NAME [3]	MUXMODE [4]	TYPE [5]	BALL RESET STATE [6]	BALL RESET REL. MUXMODE [7]	I/O VOLTAGE VALUE [8]	POWER [9]	HYS [10]	BUFFER TYPE [11]	PULL UP/ DOWN TYPE [12]	DSIS [13]	RXACTIVE / TXDISABLE [14]	IO Daisy Chain [15]
F1	DDR_DQ7	DDR_DQ7		IO	OFF		1.1 V/1.2 V/1.35 V	VDDS_DDR		DDR	PU/PD			No
E3	DDR_DQ8	DDR_DQ8		IO	OFF		1.1 V/1.2 V/1.35 V	VDDS_DDR		DDR	PU/PD			No
C3	DDR_DQ9	DDR_DQ9		IO	OFF		1.1 V/1.2 V/1.35 V	VDDS_DDR		DDR	PU/PD			No
D3	DDR_DQ10	DDR_DQ10		IO	OFF		1.1 V/1.2 V/1.35 V	VDDS_DDR		DDR	PU/PD			No
B3	DDR_DQ11	DDR_DQ11		IO	OFF		1.1 V/1.2 V/1.35 V	VDDS_DDR		DDR	PU/PD			No
D4	DDR_DQ12	DDR_DQ12		IO	OFF		1.1 V/1.2 V/1.35 V	VDDS_DDR		DDR	PU/PD			No
C4	DDR_DQ13	DDR_DQ13		IO	OFF		1.1 V/1.2 V/1.35 V	VDDS_DDR		DDR	PU/PD			No
B4	DDR_DQ14	DDR_DQ14		IO	OFF		1.1 V/1.2 V/1.35 V	VDDS_DDR		DDR	PU/PD			No
B5	DDR_DQ15	DDR_DQ15		IO	OFF		1.1 V/1.2 V/1.35 V	VDDS_DDR		DDR	PU/PD			No
E13	DDR_DQ16	DDR_DQ16		IO	OFF		1.1 V/1.2 V/1.35 V	VDDS_DDR		DDR	PU/PD			No
C14	DDR_DQ17	DDR_DQ17		IO	OFF		1.1 V/1.2 V/1.35 V	VDDS_DDR		DDR	PU/PD			No
B14	DDR_DQ18	DDR_DQ18		IO	OFF		1.1 V/1.2 V/1.35 V	VDDS_DDR		DDR	PU/PD			No
A14	DDR_DQ19	DDR_DQ19		IO	OFF		1.1 V/1.2 V/1.35 V	VDDS_DDR		DDR	PU/PD			No
E14	DDR_DQ20	DDR_DQ20		IO	OFF		1.1 V/1.2 V/1.35 V	VDDS_DDR		DDR	PU/PD			No
B13	DDR_DQ21	DDR_DQ21		IO	OFF		1.1 V/1.2 V/1.35 V	VDDS_DDR		DDR	PU/PD			No
C13	DDR_DQ22	DDR_DQ22		IO	OFF		1.1 V/1.2 V/1.35 V	VDDS_DDR		DDR	PU/PD			No
D13	DDR_DQ23	DDR_DQ23		IO	OFF		1.1 V/1.2 V/1.35 V	VDDS_DDR		DDR	PU/PD			No
D15	DDR_DQ24	DDR_DQ24		IO	OFF		1.1 V/1.2 V/1.35 V	VDDS_DDR		DDR	PU/PD			No
C15	DDR_DQ25	DDR_DQ25		IO	OFF		1.1 V/1.2 V/1.35 V	VDDS_DDR		DDR	PU/PD			No
E16	DDR_DQ26	DDR_DQ26		IO	OFF		1.1 V/1.2 V/1.35 V	VDDS_DDR		DDR	PU/PD			No
E15	DDR_DQ27	DDR_DQ27		IO	OFF		1.1 V/1.2 V/1.35 V	VDDS_DDR		DDR	PU/PD			No
D16	DDR_DQ28	DDR_DQ28		IO	OFF		1.1 V/1.2 V/1.35 V	VDDS_DDR		DDR	PU/PD			No
B16	DDR_DQ29	DDR_DQ29		IO	OFF		1.1 V/1.2 V/1.35 V	VDDS_DDR		DDR	PU/PD			No

Copyright © 2023 Texas Instruments Incorporated

Table 5-1. Pin Attributes (continued)

BALL NUMBER [1]	BALL NAME [2]	SIGNAL NAME [3]	MUXMODE [4]	TYPE [5]	BALL RESET STATE [6]	BALL RESET REL. MUXMODE [7]	I/O VOLTAGE VALUE [8]	POWER [9]	HYS [10]	BUFFER TYPE [11]	PULL UP/ DOWN TYPE [12]	DSIS [13]	RXACTIVE / TXDISABLE [14]	IO Daisy Chain [15]
C16	DDR_DQ30	DDR_DQ30		IO	OFF		1.1 V/1.2 V/1.35 V	VDDS_DDR		DDR	PU/PD			No
A17	DDR_DQ31	DDR_DQ31		IO	OFF		1.1 V/1.2 V/1.35 V	VDDS_DDR		DDR	PU/PD			No
C1	DDR_DQS0N	DDR_DQS0N		IO	OFF		1.1 V/1.2 V/1.35 V	VDDS_DDR		DDR	PU/PD			No
D1	DDR_DQS0P	DDR_DQS0P		IO	OFF		1.1 V/1.2 V/1.35 V	VDDS_DDR		DDR	PU/PD			No
A4	DDR_DQS1N	DDR_DQS1N		IO	OFF		1.1 V/1.2 V/1.35 V	VDDS_DDR		DDR	PU/PD			No
A5	DDR_DQS1P	DDR_DQS1P		IO	OFF		1.1 V/1.2 V/1.35 V	VDDS_DDR		DDR	PU/PD			No
A12	DDR_DQS2N	DDR_DQS2N		IO	OFF		1.1 V/1.2 V/1.35 V	VDDS_DDR		DDR	PU/PD			No
A13	DDR_DQS2P	DDR_DQS2P		IO	OFF		1.1 V/1.2 V/1.35 V	VDDS_DDR		DDR	PU/PD			No
A16	DDR_DQS3N	DDR_DQS3N		IO	OFF		1.1 V/1.2 V/1.35 V	VDDS_DDR		DDR	PU/PD			No
A15	DDR_DQS3P	DDR_DQS3P		IO	OFF		1.1 V/1.2 V/1.35 V	VDDS_DDR		DDR	PU/PD			No
B19	DDR_ECC_D0	DDR_ECC_D0		IO	OFF		1.1 V/1.2 V/1.35 V	VDDS_DDR		DDR	PU/PD			No
B18	DDR_ECC_D1	DDR_ECC_D1		IO	OFF		1.1 V/1.2 V/1.35 V	VDDS_DDR		DDR	PU/PD			No
C18	DDR_ECC_D2	DDR_ECC_D2		IO	OFF		1.1 V/1.2 V/1.35 V	VDDS_DDR		DDR	PU/PD			No
D18	DDR_ECC_D3	DDR_ECC_D3		IO	OFF		1.1 V/1.2 V/1.35 V	VDDS_DDR		DDR	PU/PD			No
E18	DDR_ECC_D4	DDR_ECC_D4		IO	OFF		1.1 V/1.2 V/1.35 V	VDDS_DDR		DDR	PU/PD			No
E17	DDR_ECC_D5	DDR_ECC_D5		IO	OFF		1.1 V/1.2 V/1.35 V	VDDS_DDR		DDR	PU/PD			No
D17	DDR_ECC_D6	DDR_ECC_D6		IO	OFF		1.1 V/1.2 V/1.35 V	VDDS_DDR		DDR	PU/PD			No
C17	DDR_ECC_DM	DDR_ECC_DM		IO	OFF		1.1 V/1.2 V/1.35 V	VDDS_DDR		DDR	PU/PD			No
A18	DDR_ECC_DQSN	DDR_ECC_DQSN		IO	OFF		1.1 V/1.2 V/1.35 V	VDDS_DDR		DDR	PU/PD			No
A19	DDR_ECC_DQSP	DDR_ECC_DQSP		IO	OFF		1.1 V/1.2 V/1.35 V	VDDS_DDR		DDR	PU/PD			No
F16	DDR_FS_RESETn	DDR_FS_RESETn		IO	drive 0 (OFF)		1.1 V/1.2 V/1.35 V	VDDS_DDR		LVCMOS	PD			No
A11	DDR_RESETn	DDR_RESETn		IO	drive 0 (OFF)		1.1 V/1.2 V/1.35 V	VDDS_DDR		DDR	PU/PD			No
F12	DDR_VREF0	DDR_VREF0		A			0.5*VDDS_DDR	VDDS_DDR		DDR				No

Copyright © 2023 Texas Instruments Incorporated

Table 5-1. Pin Attributes (continued)

BALL NUMBER [1]	BALL NAME [2]	SIGNAL NAME [3]	MUXMODE [4]	TYPE [5]	BALL RESET STATE [6]	BALL RESET REL. MUXMODE [7]	I/O VOLTAGE VALUE [8]	POWER [9]	HYS [10]	BUFFER TYPE [11]	PULL UP/ DOWN TYPE [12]	DSIS [13]	RXACTIVE / TXDISABLE [14]	IO Daisy Chain [15]
F15	DDR_VREF_ZQ	DDR_VREF_ZQ		A				VDDS_DDR		DDR				No
F13	DDR_VTP	DDR_VTP		A			1.1 V/1.2 V/1.35 V	VDDS_DDR		DDR				No
D21	ECAP0_IN_APWM_OUT	ECAP0_IN_APWM_OUT	0	IO	OFF	7	1.8 V/3.3 V	VDDSHV0	Yes	LVCMOS	PU/PD	0	0/1	Yes
		SYNC0_OUT	1	O										
		CPTS0_RFT_CLK	2	I								0		
		GPIO1_86	7	IO								0		
AA2	EMU0	EMU0	0	IO	PU	0	1.8 V/3.3 V	VDDSHV0_WKUP	Yes	LVCMOS	PU/PD		1/1	Yes
AA1	EMU1	EMU1	0	IO	PU	0	1.8 V/3.3 V	VDDSHV0_WKUP	Yes	LVCMOS	PU/PD		1/1	Yes
A22	EXT_REFCLK1	EXT_REFCLK1	0	I	OFF	7	1.8 V/3.3 V	VDDSHV0	Yes	LVCMOS	PU/PD	0	0/1	Yes
		SYNC1_OUT	1	O										
		GPIO1_87	7	IO								0		
P25	GPMC0_ADVn_ALE	GPMC0_ADVn_ALE	0	O	OFF	7	1.8 V/3.3 V	VDDSHV2	Yes	LVCMOS	PU/PD		1/1	Yes
		VOUT1_DATA17	1	O										
		GPIO0_17	7	IO								0		
		BOOTMODE16	Bootstrap	I								0		
R28	GPMC0_CLK	GPMC0_CLK	0	O	OFF	7	1.8 V/3.3 V	VDDSHV2	Yes	LVCMOS	PU/PD	0	0/1	Yes
		VOUT1_DATA16	1	O										
		VIN0_PCLK	2	I								0		
		GPMC0_FCLK_MUX	3	O										
		GPIO0_16	7	IO								0		
T24	GPMC0_DIR	GPMC0_DIR	0	O	OFF	7	1.8 V/3.3 V	VDDSHV2	Yes	LVCMOS	PU/PD		0/1	Yes
		VOUT1_HSYNC	1	O										
		VIN0_DATA8	2	I								0		
		PRG2_PWM1_B0	3	IO								1		
		PRG2_IEP1_EDC_SYNC_OUT0	4	O										
		TIMER_IO6	5	IO								0		
		PRG2_IEP0_EDIO_DATA_IN_OUT29	6	IO								0		
		GPIO0_25	7	IO								0		
P26	GPMC0_OEn_REn	GPMC0_OEn_REn	0	O	OFF	7	1.8 V/3.3 V	VDDSHV2	Yes	LVCMOS	PU/PD		1/1	Yes
		VOUT1_DATA18	1	O										
		GPIO0_18	7	IO								0		
		BOOTMODE17	Bootstrap	I								0		

Copyright © 2023 Texas Instruments Incorporated

Table 5-1. Pin Attributes (continued)

BALL NUMBER [1]	BALL NAME [2]	SIGNAL NAME [3]	MUXMODE [4]	TYPE [5]	BALL RESET STATE [6]	BALL RESET REL. MUXMODE [7]	I/O VOLTAGE VALUE [8]	POWER [9]	HYS [10]	BUFFER TYPE [11]	PULL UP/ DOWN TYPE [12]	DSIS [13]	RXACTIVE / TXDISABLE [14]	IO Daisy Chain [15]
U28	GPMC0_WEn	GPMC0_WEn	0	O	OFF	7	1.8 V/3.3 V	VDDSHV2	Yes	LVCMOS	PU/PD		1/1	Yes
		VOUT1_DATA19	1	O										
		GPIO0_19	7	IO								0		
		BOOTMODE18	Bootstrap	I								0		
T25	GPMC0_WPn	GPMC0_WPn	0	O	OFF	7	1.8 V/3.3 V	VDDSHV2	Yes	LVCMOS	PU/PD		0/1	Yes
		VOUT1_VSYNC	1	O										
		GPIO0_24	7	IO								0		
M27	GPMC0_AD0	GPMC0_AD0	0	IO	OFF	7	1.8 V/3.3 V	VDDSHV2	Yes	LVCMOS	PU/PD	0	1/1	Yes
		VOUT1_DATA0	1	O										
		VIN0_DATA12	2	I								0		
		GPIO0_0	7	IO								0		
		BOOTMODE00	Bootstrap	I								0		
M23	GPMC0_AD1	GPMC0_AD1	0	IO	OFF	7	1.8 V/3.3 V	VDDSHV2	Yes	LVCMOS	PU/PD	0	1/1	Yes
		VOUT1_DATA1	1	O										
		VIN0_DATA13	2	I								0		
		GPIO0_1	7	IO								0		
		BOOTMODE01	Bootstrap	I								0		
M28	GPMC0_AD2	GPMC0_AD2	0	IO	OFF	7	1.8 V/3.3 V	VDDSHV2	Yes	LVCMOS	PU/PD	0	1/1	Yes
		VOUT1_DATA2	1	O										
		VIN0_DATA14	2	I								0		
		GPIO0_2	7	IO								0		
		BOOTMODE02	Bootstrap	I								0		
M24	GPMC0_AD3	GPMC0_AD3	0	IO	OFF	7	1.8 V/3.3 V	VDDSHV2	Yes	LVCMOS	PU/PD	0	1/1	Yes
		VOUT1_DATA3	1	O										
		VIN0_DATA15	2	I								0		
		GPIO0_3	7	IO								0		
		BOOTMODE03	Bootstrap	I								0		
N24	GPMC0_AD4	GPMC0_AD4	0	IO	OFF	7	1.8 V/3.3 V	VDDSHV2	Yes	LVCMOS	PU/PD	0	1/1	Yes
		VOUT1_DATA4	1	O										
		GPIO0_4	7	IO								0		
		BOOTMODE04	Bootstrap	I								0		
N27	GPMC0_AD5	GPMC0_AD5	0	IO	OFF	7	1.8 V/3.3 V	VDDSHV2	Yes	LVCMOS	PU/PD	0	1/1	Yes
		VOUT1_DATA5	1	O										
		GPIO0_5	7	IO								0		
		BOOTMODE05	Bootstrap	I								0		

Copyright © 2023 Texas Instruments Incorporated

Table 5-1. Pin Attributes (continued)

BALL NUMBER [1]	BALL NAME [2]	SIGNAL NAME [3]	MUXMODE [4]	TYPE [5]	BALL RESET STATE [6]	BALL RESET REL. MUXMODE [7]	I/O VOLTAGE VALUE [8]	POWER [9]	HYS [10]	BUFFER TYPE [11]	PULL UP/ DOWN TYPE [12]	DSIS [13]	RXACTIVE / TXDISABLE [14]	IO Daisy Chain [15]
N28	GPMC0_AD6	GPMC0_AD6	0	IO	OFF	7	1.8 V/3.3 V	VDDSHV2	Yes	LVCMOS	PU/PD	0	1/1	Yes
		VOUT1_DATA6	1	O										
		GPIO0_6	7	IO								0		
		BOOTMODE06	Bootstrap	I								0		
M25	GPMC0_AD7	GPMC0_AD7	0	IO	OFF	7	1.8 V/3.3 V	VDDSHV2	Yes	LVCMOS	PU/PD	0	1/1	Yes
		VOUT1_DATA7	1	O										
		GPIO0_7	7	IO								0		
		BOOTMODE07	Bootstrap	I								0		
N23	GPMC0_AD8	GPMC0_AD8	0	IO	OFF	7	1.8 V/3.3 V	VDDSHV2	Yes	LVCMOS	PU/PD	0	1/1	Yes
		VOUT1_DATA8	1	O										
		VIN0_DATA0	2	I								0		
		PRG2_PRU0_GPO12	3	IO								0		
		PRG2_PRU0_GPI12	4	I								0		
		PRG2_PWM2_A0	5	IO								0		
		GPIO0_8	7	IO								0		
		BOOTMODE08	Bootstrap	I								0		
M26	GPMC0_AD9	GPMC0_AD9	0	IO	OFF	7	1.8 V/3.3 V	VDDSHV2	Yes	LVCMOS	PU/PD	0	1/1	Yes
		VOUT1_DATA9	1	O										
		VIN0_DATA1	2	I								0		
		PRG2_PRU0_GPO13	3	IO								0		
		PRG2_PRU0_GPI13	4	I								0		
		PRG2_PWM2_B0	5	IO								1		
		GPIO0_9	7	IO								0		
		BOOTMODE09	Bootstrap	I								0		
P28	GPMC0_AD10	GPMC0_AD10	0	IO	OFF	7	1.8 V/3.3 V	VDDSHV2	Yes	LVCMOS	PU/PD	0	1/1	Yes
		VOUT1_DATA10	1	O										
		VIN0_DATA2	2	I								0		
		PRG2_PRU0_GPO14	3	IO								0		
		PRG2_PRU0_GPI14	4	I								0		
		PRG2_PWM0_TZ_IN	6	I								0		
		GPIO0_10	7	IO								0		
		BOOTMODE10	Bootstrap	I								0		

Copyright © 2023 Texas Instruments Incorporated

Table 5-1. Pin Attributes (continued)

BALL NUMBER [1]	BALL NAME [2]	SIGNAL NAME [3]	MUXMODE [4]	TYPE [5]	BALL RESET STATE [6]	BALL RESET REL. MUXMODE [7]	I/O VOLTAGE VALUE [8]	POWER [9]	HYS [10]	BUFFER TYPE [11]	PULL UP/ DOWN TYPE [12]	DSIS [13]	RXACTIVE / TXDISABLE [14]	IO Daisy Chain [15]
P27	GPMC0_AD11	GPMC0_AD11	0	IO	OFF	7	1.8 V/3.3 V	VDDSHV2	Yes	LVCMOS	PU/PD	0	1/1	Yes
		VOUT1_DATA11	1	O										
		VIN0_DATA3	2	I								0		
		PRG2_PRU0_GPO15	3	IO								0		
		PRG2_PRU0_GPI15	4	I								0		
		PRG2_PWM2_A1	5	IO								0		
		GPIO0_11	7	IO								0		
		BOOTMODE11	Bootstrap	I								0		
N26	GPMC0_AD12	GPMC0_AD12	0	IO	OFF	7	1.8 V/3.3 V	VDDSHV2	Yes	LVCMOS	PU/PD	0	1/1	Yes
		VOUT1_DATA12	1	O										
		VIN0_DATA4	2	I								0		
		PRG2_PRU1_GPO12	3	IO								0		
		PRG2_PRU1_GPI12	4	I								0		
		PRG2_PWM2_B1	5	IO								1		
		GPIO0_12	7	IO								0		
		BOOTMODE12	Bootstrap	I								0		
N25	GPMC0_AD13	GPMC0_AD13	0	IO	OFF	7	1.8 V/3.3 V	VDDSHV2	Yes	LVCMOS	PU/PD	0	1/1	Yes
		VOUT1_DATA13	1	O										
		VIN0_DATA5	2	I								0		
		PRG2_PRU1_GPO13	3	IO								0		
		PRG2_PRU1_GPI13	4	I								0		
		PRG2_PWM2_A2	5	IO								0		
		GPIO0_13	7	IO								0		
		BOOTMODE13	Bootstrap	I								0		
P24	GPMC0_AD14	GPMC0_AD14	0	IO	OFF	7	1.8 V/3.3 V	VDDSHV2	Yes	LVCMOS	PU/PD	0	1/1	Yes
		VOUT1_DATA14	1	O										
		VIN0_DATA6	2	I								0		
		PRG2_PRU1_GPO14	3	IO								0		
		PRG2_PRU1_GPI14	4	I								0		
		PRG2_PWM0_TZ_OUT	6	O										
		GPIO0_14	7	IO								0		
		BOOTMODE14	Bootstrap	I								0		

Copyright © 2023 Texas Instruments Incorporated

Table 5-1. Pin Attributes (continued)

BALL NUMBER [1]	BALL NAME [2]	SIGNAL NAME [3]	MUXMODE [4]	TYPE [5]	BALL RESET STATE [6]	BALL RESET REL. MUXMODE [7]	I/O VOLTAGE VALUE [8]	POWER [9]	HYS [10]	BUFFER TYPE [11]	PULL UP/ DOWN TYPE [12]	DSIS [13]	RXACTIVE / TXDISABLE [14]	IO Daisy Chain [15]
R27	GPMC0_AD15	GPMC0_AD15	0	IO	OFF	7	1.8 V/3.3 V	VDDSHV2	Yes	LVCMOS	PU/PD	0	1/1	Yes
		VOUT1_DATA15	1	O										
		VIN0_DATA7	2	I								0		
		PRG2_PRU1_GPO15	3	IO								0		
		PRG2_PRU1_GPI15	4	I								0		
		PRG2_PWM2_B2	5	IO								1		
		GPIO0_15	7	IO								0		
		BOOTMODE15	Bootstrap	I								0		
T28	GPMC0_BE0n_CLE	GPMC0_BE0n_CLE	0	O	OFF	7	1.8 V/3.3 V	VDDSHV2	Yes	LVCMOS	PU/PD		0/1	Yes
		VOUT1_DATA20	1	O										
		GPIO0_20	7	IO								0		
P23	GPMC0_BE1n	GPMC0_BE1n	0	O	OFF	7	1.8 V/3.3 V	VDDSHV2	Yes	LVCMOS	PU/PD		0/1	Yes
		VOUT1_DATA21	1	O										
		VIN0_HD	2	I								0		
		PRG2_PRU0_GPO17	3	IO								0		
		PRG2_PRU0_GPI17	4	I								0		
		TIMER_IO2	5	IO								0		
		PRG2_PWM2_TZ_IN	6	I								0		
		GPIO0_21	7	IO								0		
R24	GPMC0_CSn0	GPMC0_CSn0	0	O	OFF	7	1.8 V/3.3 V	VDDSHV2	Yes	LVCMOS	PU/PD		0/1	Yes
		VOUT1_PCLK	1	O										
		GPIO0_26	7	IO								0		
T23	GPMC0_CSn1	GPMC0_CSn1	0	O	OFF	7	1.8 V/3.3 V	VDDSHV2	Yes	LVCMOS	PU/PD		0/1	Yes
		VOUT1_DE	1	O										
		VIN0_DATA9	2	I								0		
		PRG2_PRU1_GPO17	3	IO								0		
		PRG2_PRU1_GPI17	4	I								0		
		TIMER_IO7	5	IO								0		
		PRG2_PWM2_TZ_OUT	6	O										
		GPIO0_27	7	IO								0		

Copyright © 2023 Texas Instruments Incorporated

Table 5-1. Pin Attributes (continued)

BALL NUMBER [1]	BALL NAME [2]	SIGNAL NAME [3]	MUXMODE [4]	TYPE [5]	BALL RESET STATE [6]	BALL RESET REL. MUXMODE [7]	I/O VOLTAGE VALUE [8]	POWER [9]	HYS [10]	BUFFER TYPE [11]	PULL UP/ DOWN TYPE [12]	DSIS [13]	RXACTIVE / TXDISABLE [14]	IO Daisy Chain [15]
R25	GPMC0_CSn2	GPMC0_CSn2	0	O	OFF	7	1.8 V/3.3 V	VDDSHV2	Yes	LVCMOS	PU/PD		0/1	Yes
		VOUT1_EXTPCLKIN	1	I								0		
		VIN0_DATA10	2	I								0		
		GPMC0_A27	3	OZ										
		PRG2_IEP1_EDC_LATCH_IN1	4	I								0		
		I2C2_SDA	5	IOD								1		
		PRG2_IEP0_EDIO_DATA_IN_OUT30	6	IO								0		
		GPIO0_28	7	IO								0		
T27	GPMC0_CSn3	GPMC0_CSn3	0	O	OFF	7	1.8 V/3.3 V	VDDSHV2	Yes	LVCMOS	PU/PD		0/1	Yes
		VIN0_DATA11	2	I								0		
		GPMC0_A26	3	OZ										
		PRG2_IEP1_EDC_SYNC_OUT1	4	O										
		I2C2_SCL	5	IOD								1		
		PRG2_IEP0_EDIO_DATA_IN_OUT31	6	IO								0		
		GPIO0_29	7	IO								0		
R26	GPMC0_WAIT0	GPMC0_WAIT0	0	I	OFF	7	1.8 V/3.3 V	VDDSHV2	Yes	LVCMOS	PU/PD	1	0/1	Yes
		VOUT1_DATA22	1	O										
		GPIO0_22	7	IO								0		
R23	GPMC0_WAIT1	GPMC0_WAIT1	0	I	OFF	7	1.8 V/3.3 V	VDDSHV2	Yes	LVCMOS	PU/PD	1	0/1	Yes
		VOUT1_DATA23	1	O										
		VIN0_VD	2	I								0		
		PRG2_PWM1_A0	3	IO								0		
		PRG2_IEP1_EDC_LATCH_IN0	4	I								0		
		TIMER_IO3	5	IO								0		
		PRG2_IEP0_EDIO_DATA_IN_OUT28	6	IO								0		
		GPIO0_23	7	IO								0		
D20	I2C0_SCL	I2C0_SCL	0	IOD	OFF	7	1.8 V/3.3 V	VDDSHV0	Yes	LVCMOS-FS	PU/PD	1	1/1	Yes
C21	I2C0_SDA	I2C0_SDA	0	IOD	OFF	7	1.8 V/3.3 V	VDDSHV0	Yes	LVCMOS-FS	PU/PD	1	1/1	Yes
B21	I2C1_SCL	I2C1_SCL	0	IOD	OFF	7	1.8 V/3.3 V	VDDSHV0	Yes	LVCMOS-FS	PU/PD	1	1/1	Yes
		CPTS0_HW1TSPUSH	1	I								0		
E21	I2C1_SDA	I2C1_SDA	0	IOD	OFF	7	1.8 V/3.3 V	VDDSHV0	Yes	LVCMOS-FS	PU/PD	1	1/1	Yes
		CPTS0_HW2TSPUSH	1	I								0		
K2	MCU_ADC0_REFN	MCU_ADC0_REFN		A			1.8 V	VDDA_ADC_MCU		Analog				No

Copyright © 2023 Texas Instruments Incorporated

Table 5-1. Pin Attributes (continued)

BALL NUMBER [1]	BALL NAME [2]	SIGNAL NAME [3]	MUXMODE [4]	TYPE [5]	BALL RESET STATE [6]	BALL RESET REL. MUXMODE [7]	I/O VOLTAGE VALUE [8]	POWER [9]	HYS [10]	BUFFER TYPE [11]	PULL UP/ DOWN TYPE [12]	DSIS [13]	RXACTIVE / TXDISABLE [14]	IO Daisy Chain [15]
K3	MCU_ADC0_REFP	MCU_ADC0_REFP		A			1.8 V	VDDA_ADC_MCU		Analog				No
H3	MCU_ADC1_REFN	MCU_ADC1_REFN		A			1.8 V	VDDA_ADC_MCU		Analog				No
H2	MCU_ADC1_REFP	MCU_ADC1_REFP		A			1.8 V	VDDA_ADC_MCU		Analog				No
K5	MCU_ADC0_AIN0	MCU_ADC0_AIN0		A			1.8 V	VDDA_ADC_MCU		Analog				No
J3	MCU_ADC0_AIN1	MCU_ADC0_AIN1		A			1.8 V	VDDA_ADC_MCU		Analog				No
J1	MCU_ADC0_AIN2	MCU_ADC0_AIN2		A			1.8 V	VDDA_ADC_MCU		Analog				No
J5	MCU_ADC0_AIN3	MCU_ADC0_AIN3		A			1.8 V	VDDA_ADC_MCU		Analog				No
K4	MCU_ADC0_AIN4	MCU_ADC0_AIN4		A			1.8 V	VDDA_ADC_MCU		Analog				No
J4	MCU_ADC0_AIN5	MCU_ADC0_AIN5		A			1.8 V	VDDA_ADC_MCU		Analog				No
J2	MCU_ADC0_AIN6	MCU_ADC0_AIN6		A			1.8 V	VDDA_ADC_MCU		Analog				No
J6	MCU_ADC0_AIN7	MCU_ADC0_AIN7		A			1.8 V	VDDA_ADC_MCU		Analog				No
F4	MCU_ADC1_AIN0	MCU_ADC1_AIN0		A			1.8 V	VDDA_ADC_MCU		Analog				No
G6	MCU_ADC1_AIN1	MCU_ADC1_AIN1		A			1.8 V	VDDA_ADC_MCU		Analog				No
G4	MCU_ADC1_AIN2	MCU_ADC1_AIN2		A			1.8 V	VDDA_ADC_MCU		Analog				No
H5	MCU_ADC1_AIN3	MCU_ADC1_AIN3		A			1.8 V	VDDA_ADC_MCU		Analog				No
F5	MCU_ADC1_AIN4	MCU_ADC1_AIN4		A			1.8 V	VDDA_ADC_MCU		Analog				No
G5	MCU_ADC1_AIN5	MCU_ADC1_AIN5		A			1.8 V	VDDA_ADC_MCU		Analog				No
G3	MCU_ADC1_AIN6	MCU_ADC1_AIN6		A			1.8 V	VDDA_ADC_MCU		Analog				No
H4	MCU_ADC1_AIN7	MCU_ADC1_AIN7		A			1.8 V	VDDA_ADC_MCU		Analog				No
V5	MCU_BYP_POR	MCU_BYP_POR		I	OFF		1.8 V/3.3 V	VDDSHV0_WKUP	Yes	LVCMOS				No
AD8	MCU_I2C0_SCL	MCU_I2C0_SCL	0	IOD	OFF	0	1.8 V/3.3 V	VDDSHV0_WKUP	Yes	I2C OPEN DRAIN		1	1/0	Yes
AD7	MCU_I2C0_SDA	MCU_I2C0_SDA	0	IOD	OFF	0	1.8 V/3.3 V	VDDSHV0_WKUP	Yes	I2C OPEN DRAIN		1	1/0	Yes

Copyright © 2023 Texas Instruments Incorporated

Table 5-1. Pin Attributes (continued)

BALL NUMBER [1]	BALL NAME [2]	SIGNAL NAME [3]	MUXMODE [4]	TYPE [5]	BALL RESET STATE [6]	BALL RESET REL. MUXMODE [7]	I/O VOLTAGE VALUE [8]	POWER [9]	HYS [10]	BUFFER TYPE [11]	PULL UP/ DOWN TYPE [12]	DSIS [13]	RXACTIVE / TXDISABLE [14]	IO Daisy Chain [15]
W2	MCU_MCAN0_RX	MCU_MCAN0_RX	0	I	OFF	7	1.8 V/3.3 V	VDDSHV0_WKUP	Yes	LVCMOS	PU/PD	0	0/1	Yes
		WKUP_GPIO0_55	7	IO								0		
W1	MCU_MCAN0_TX	MCU_MCAN0_TX	0	O	OFF	7	1.8 V/3.3 V	VDDSHV0_WKUP	Yes	LVCMOS	PU/PD	0	0/1	Yes
		WKUP_GPIO0_54	7	IO								0		
L1	MCU_MDIO0_MDC	MCU_MDIO0_MDC	0	O	OFF	7	1.8 V/3.3 V	VDDSHV2_WKUP	Yes	LVCMOS	PU/PD		0/1	Yes
		WKUP_GPIO0_47	7	IO								0		
L4	MCU_MDIO0_MDIO	MCU_MDIO0_MDIO	0	IO	OFF	7	1.8 V/3.3 V	VDDSHV2_WKUP	Yes	LVCMOS	PU/PD	0	0/1	Yes
		WKUP_GPIO0_46	7	IO								0		
V1	MCU_OSPI0_CLK	MCU_OSPI0_CLK	0	O	OFF	7	1.8 V/3.3 V	VDDSHV1_WKUP	Yes	LVCMOS	PU/PD		0/1	Yes
		MCU_HYPERBUS0_CK	1	O										
		WKUP_GPIO0_12	7	IO								0		
U2	MCU_OSPI0_DQS	MCU_OSPI0_DQS	0	I	OFF	7	1.8 V/3.3 V	VDDSHV1_WKUP	Yes	LVCMOS	PU/PD	0	0/1	Yes
		MCU_HYPERBUS0_RWDS	1	IO								0		
		WKUP_GPIO0_14	7	IO								0		
U1	MCU_OSPI0_LBCLKO	MCU_OSPI0_LBCLKO	0	IO	OFF	7	1.8 V/3.3 V	VDDSHV1_WKUP	Yes	LVCMOS	PU/PD		0/1	Yes
		MCU_HYPERBUS0_CKn	1	O										
		WKUP_GPIO0_13	7	IO								0		
T1	MCU_OSPI1_CLK	MCU_OSPI1_CLK	0	O	OFF	7	1.8 V/3.3 V	VDDSHV1_WKUP	Yes	LVCMOS	PU/PD		0/1	Yes
		WKUP_GPIO0_25	7	IO								0		
P2	MCU_OSPI1_DQS	MCU_OSPI1_DQS	0	I	OFF	7	1.8 V/3.3 V	VDDSHV1_WKUP	Yes	LVCMOS	PU/PD	0	0/1	Yes
		MCU_OSPI0_CSn3	1	O										
		MCU_HYPERBUS0_INTn	2	I								1		
		WKUP_GPIO0_27	7	IO								0		
R1	MCU_OSPI1_LBCLKO	MCU_OSPI1_LBCLKO	0	IO	OFF	7	1.8 V/3.3 V	VDDSHV1_WKUP	Yes	LVCMOS	PU/PD	0	0/1	Yes
		MCU_OSPI0_CSn2	1	O										
		MCU_HYPERBUS0_RESETOn	2	I								1		
		WKUP_GPIO0_26	7	IO								0		
R4	MCU_OSPI0_CSn0	MCU_OSPI0_CSn0	0	O	OFF	7	1.8 V/3.3 V	VDDSHV1_WKUP	Yes	LVCMOS	PU/PD		0/1	Yes
		MCU_HYPERBUS0_CSn0	1	O										
		WKUP_GPIO0_23	7	IO								0		
R5	MCU_OSPI0_CSn1	MCU_OSPI0_CSn1	0	O	OFF	7	1.8 V/3.3 V	VDDSHV1_WKUP	Yes	LVCMOS	PU/PD		0/1	Yes
		MCU_HYPERBUS0_RESETn	1	O										
		WKUP_GPIO0_24	7	IO								0		
U4	MCU_OSPI0_D0	MCU_OSPI0_D0	0	IO	OFF	7	1.8 V/3.3 V	VDDSHV1_WKUP	Yes	LVCMOS	PU/PD	0	0/1	Yes
		MCU_HYPERBUS0_DQ0	1	IO								0		
		WKUP_GPIO0_15	7	IO								0		

Copyright © 2023 Texas Instruments Incorporated

Table 5-1. Pin Attributes (continued)

BALL NUMBER [1]	BALL NAME [2]	SIGNAL NAME [3]	MUXMODE [4]	TYPE [5]	BALL RESET STATE [6]	BALL RESET REL. MUXMODE [7]	I/O VOLTAGE VALUE [8]	POWER [9]	HYS [10]	BUFFER TYPE [11]	PULL UP/ DOWN TYPE [12]	DSIS [13]	RXACTIVE / TXDISABLE [14]	IO Daisy Chain [15]
U5	MCU_OSPI0_D1	MCU_OSPI0_D1	0	IO	OFF	7	1.8 V/3.3 V	VDDSHV1_WKUP	Yes	LVCMOS	PU/PD	0	0/1	Yes
		MCU_HYPERBUS0_DQ1	1	IO								0		
		WKUP_GPIO0_16	7	IO								0		
T2	MCU_OSPI0_D2	MCU_OSPI0_D2	0	IO	OFF	7	1.8 V/3.3 V	VDDSHV1_WKUP	Yes	LVCMOS	PU/PD	0	0/1	Yes
		MCU_HYPERBUS0_DQ2	1	IO								0		
		WKUP_GPIO0_17	7	IO								0		
T3	MCU_OSPI0_D3	MCU_OSPI0_D3	0	IO	OFF	7	1.8 V/3.3 V	VDDSHV1_WKUP	Yes	LVCMOS	PU/PD	0	0/1	Yes
		MCU_HYPERBUS0_DQ3	1	IO								0		
		WKUP_GPIO0_18	7	IO								0		
T4	MCU_OSPI0_D4	MCU_OSPI0_D4	0	IO	OFF	7	1.8 V/3.3 V	VDDSHV1_WKUP	Yes	LVCMOS	PU/PD	0	0/1	Yes
		MCU_HYPERBUS0_DQ4	1	IO								0		
		WKUP_GPIO0_19	7	IO								0		
T5	MCU_OSPI0_D5	MCU_OSPI0_D5	0	IO	OFF	7	1.8 V/3.3 V	VDDSHV1_WKUP	Yes	LVCMOS	PU/PD	0	0/1	Yes
		MCU_HYPERBUS0_DQ5	1	IO								0		
		WKUP_GPIO0_20	7	IO								0		
R2	MCU_OSPI0_D6	MCU_OSPI0_D6	0	IO	OFF	7	1.8 V/3.3 V	VDDSHV1_WKUP	Yes	LVCMOS	PU/PD	0	0/1	Yes
		MCU_HYPERBUS0_DQ6	1	IO								0		
		WKUP_GPIO0_21	7	IO								0		
R3	MCU_OSPI0_D7	MCU_OSPI0_D7	0	IO	OFF	7	1.8 V/3.3 V	VDDSHV1_WKUP	Yes	LVCMOS	PU/PD	0	0/1	Yes
		MCU_HYPERBUS0_DQ7	1	IO								0		
		WKUP_GPIO0_22	7	IO								0		
N2	MCU_OSPI1_CSn0	MCU_OSPI1_CSn0	0	O	OFF	7	1.8 V/3.3 V	VDDSHV1_WKUP	Yes	LVCMOS	PU/PD		0/1	Yes
		WKUP_GPIO0_32	7	IO								0		
N3	MCU_OSPI1_CSn1	MCU_OSPI1_CSn1	0	O	OFF	7	1.8 V/3.3 V	VDDSHV1_WKUP	Yes	LVCMOS	PU/PD		0/1	Yes
		MCU_HYPERBUS0_WPn	1	O										
		MCU_TIMER_IO0	2	IO								0		
		MCU_HYPERBUS0_CSn1	3	O										
		MCU_UART0_RTSn	4	O										
		MCU_SPI0_CS2	5	IO								1		
		WKUP_GPIO0_33	7	IO								0		
P3	MCU_OSPI1_D0	MCU_OSPI1_D0	0	IO	OFF	7	1.8 V/3.3 V	VDDSHV1_WKUP	Yes	LVCMOS	PU/PD	0	0/1	Yes
		WKUP_GPIO0_28	7	IO								0		
P4	MCU_OSPI1_D1	MCU_OSPI1_D1	0	IO	OFF	7	1.8 V/3.3 V	VDDSHV1_WKUP	Yes	LVCMOS	PU/PD	0	0/1	Yes
		MCU_UART0_RXD	4	I								1		
		MCU_SPI1_CS1	5	IO								1		
		WKUP_GPIO0_29	7	IO								0		

Copyright © 2023 Texas Instruments Incorporated

Table 5-1. Pin Attributes (continued)

BALL NUMBER [1]	BALL NAME [2]	SIGNAL NAME [3]	MUXMODE [4]	TYPE [5]	BALL RESET STATE [6]	BALL RESET REL. MUXMODE [7]	I/O VOLTAGE VALUE [8]	POWER [9]	HYS [10]	BUFFER TYPE [11]	PULL UP/ DOWN TYPE [12]	DSIS [13]	RXACTIVE / TXDISABLE [14]	IO Daisy Chain [15]
P5	MCU_OSPI1_D2	MCU_OSPI1_D2	0	IO	OFF	7	1.8 V/3.3 V	VDDSHV1_WKUP	Yes	LVCMOS	PU/PD	0	0/1	Yes
		MCU_UART0_TXD	4	O										
		MCU_SPI1_CS2	5	IO								1		
		WKUP_GPIO0_30	7	IO								0		
P1	MCU_OSPI1_D3	MCU_OSPI1_D3	0	IO	OFF	7	1.8 V/3.3 V	VDDSHV1_WKUP	Yes	LVCMOS	PU/PD	0	0/1	Yes
		MCU_UART0_CTSn	4	I								1		
		MCU_SPI0_CS1	5	IO								1		
		WKUP_GPIO0_31	7	IO								0		
W5	MCU_PORz	MCU_PORz		I	OFF		1.8 V/3.3 V	VDDSHV0_WKUP	Yes	LVCMOS				No
V2	MCU_PORz_OUT	MCU_PORz_OUT	0	O	OFF	0	1.8 V/3.3 V	VDDSHV0_WKUP	Yes	LVCMOS	PU/PD		0/0	No
V3	MCU_RESETSTATz	MCU_RESETSTATz	0	O	OFF	0	1.8 V/3.3 V	VDDSHV0_WKUP	Yes	LVCMOS	PU/PD		0/0	No
W4	MCU_RESETz	MCU_RESETz	0	I	PU	0	1.8 V/3.3 V	VDDSHV0_WKUP	Yes	LVCMOS	PU/PD		1/1	No
M1	MCU_RGMII1_RXC	MCU_RGMII1_RXC	0	I	OFF	7	1.8 V/3.3 V	VDDSHV2_WKUP	Yes	LVCMOS	PU/PD	0	0/1	Yes
		MCU_RMII1_REF_CLK	1	I								0		
		WKUP_GPIO0_41	7	IO								0		
N5	MCU_RGMII1_RX_CTL	MCU_RGMII1_RX_CTL	0	I	OFF	7	1.8 V/3.3 V	VDDSHV2_WKUP	Yes	LVCMOS	PU/PD	0	0/1	Yes
		MCU_RMII1_RX_ER	1	I								0		
		WKUP_GPIO0_35	7	IO								0		
N1	MCU_RGMII1_TXC	MCU_RGMII1_TXC	0	IO	OFF	7	1.8 V/3.3 V	VDDSHV2_WKUP	Yes	LVCMOS	PU/PD	0	0/1	Yes
		MCU_RMII1_TX_EN	1	O										
		WKUP_GPIO0_40	7	IO								0		
N4	MCU_RGMII1_TX_CTL	MCU_RGMII1_TX_CTL	0	O	OFF	7	1.8 V/3.3 V	VDDSHV2_WKUP	Yes	LVCMOS	PU/PD		0/1	Yes
		MCU_RMII1_CRS_DV	1	I								0		
		WKUP_GPIO0_34	7	IO								0		
L6	MCU_RGMII1_RD0	MCU_RGMII1_RD0	0	I	OFF	7	1.8 V/3.3 V	VDDSHV2_WKUP	Yes	LVCMOS	PU/PD	0	0/1	Yes
		MCU_RMII1_RXD0	1	I								0		
		WKUP_GPIO0_45	7	IO								0		
M6	MCU_RGMII1_RD1	MCU_RGMII1_RD1	0	I	OFF	7	1.8 V/3.3 V	VDDSHV2_WKUP	Yes	LVCMOS	PU/PD	0	0/1	Yes
		MCU_RMII1_RXD1	1	I								0		
		WKUP_GPIO0_44	7	IO								0		
L5	MCU_RGMII1_RD2	MCU_RGMII1_RD2	0	I	OFF	7	1.8 V/3.3 V	VDDSHV2_WKUP	Yes	LVCMOS	PU/PD	0	0/1	Yes
		WKUP_GPIO0_43	7	IO								0		
L2	MCU_RGMII1_RD3	MCU_RGMII1_RD3	0	I	OFF	7	1.8 V/3.3 V	VDDSHV2_WKUP	Yes	LVCMOS	PU/PD	0	0/1	Yes
		WKUP_GPIO0_42	7	IO								0		

Copyright © 2023 Texas Instruments Incorporated

Table 5-1. Pin Attributes (continued)

BALL NUMBER [1]	BALL NAME [2]	SIGNAL NAME [3]	MUXMODE [4]	TYPE [5]	BALL RESET STATE [6]	BALL RESET REL. MUXMODE [7]	I/O VOLTAGE VALUE [8]	POWER [9]	HYS [10]	BUFFER TYPE [11]	PULL UP/ DOWN TYPE [12]	DSIS [13]	RXACTIVE / TXDISABLE [14]	IO Daisy Chain [15]
M5	MCU_RGMII1_TD0	MCU_RGMII1_TD0	0	O	OFF	7	1.8 V/3.3 V	VDDSHV2_WKUP	Yes	LVCMOS	PU/PD		0/1	Yes
		MCU_RMII1_TXD0	1	O										
		WKUP_GPIO0_39	7	IO								0		
M4	MCU_RGMII1_TD1	MCU_RGMII1_TD1	0	O	OFF	7	1.8 V/3.3 V	VDDSHV2_WKUP	Yes	LVCMOS	PU/PD		0/1	Yes
		MCU_RMII1_TXD1	1	O										
		WKUP_GPIO0_38	7	IO								0		
M3	MCU_RGMII1_TD2	MCU_RGMII1_TD2	0	O	OFF	7	1.8 V/3.3 V	VDDSHV2_WKUP	Yes	LVCMOS	PU/PD		0/1	Yes
		WKUP_GPIO0_37	7	IO								0		
M2	MCU_RGMII1_TD3	MCU_RGMII1_TD3	0	O	OFF	7	1.8 V/3.3 V	VDDSHV2_WKUP	Yes	LVCMOS	PU/PD		0/1	Yes
		WKUP_GPIO0_36	7	IO								0		
W3	MCU_SAFETY_ERRORn	MCU_SAFETY_ERRORn	0	IO	PD	0	1.8 V/3.3 V	VDDSHV0_WKUP	Yes	LVCMOS	PU/PD		1/0	No
Y1	MCU_SPI0_CLK	MCU_SPI0_CLK	0	IO	OFF	7	1.8 V/3.3 V	VDDSHV0_WKUP	Yes	LVCMOS	PU/PD	0	1/1	Yes
		WKUP_GPIO0_48	7	IO								0		
		MCU_BOOTMODE06	Bootstrap	I								0		
Y4	MCU_SPI0_CS0	MCU_SPI0_CS0	0	IO	OFF	7	1.8 V/3.3 V	VDDSHV0_WKUP	Yes	LVCMOS	PU/PD	1	0/1	Yes
		WKUP_GPIO0_51	7	IO								0		
Y3	MCU_SPI0_D0	MCU_SPI0_D0	0	IO	OFF	7	1.8 V/3.3 V	VDDSHV0_WKUP	Yes	LVCMOS	PU/PD	0	1/1	Yes
		WKUP_GPIO0_49	7	IO								0		
		MCU_BOOTMODE07	Bootstrap	I								0		
Y2	MCU_SPI0_D1	MCU_SPI0_D1	0	IO	OFF	7	1.8 V/3.3 V	VDDSHV0_WKUP	Yes	LVCMOS	PU/PD	0	1/1	Yes
		WKUP_GPIO0_50	7	IO								0		
		MCU_BOOTMODE05	Bootstrap	I								0		
B25	MMC0_CLK	MMC0_CLK	0	O	PD	7	1.8 V/3.3 V	VDDSHV6		LVCMOS		1		No
		GPIO1_10	7	O								0		
B27	MMC0_CMD	MMC0_CMD	0	IO	PU	7	1.8 V/3.3 V	VDDSHV6		LVCMOS	PU/PD	1		No
		GPIO1_11	7	IO								0		
C25	MMC0_DS	MMC0_DS	0	I	PD	7	1.8 V/3.3 V	VDDSHV6		LVCMOS	PU/PD	1		No
		GPIO1_12	7	I								0		
A23	MMC0_SDCD	MMC0_SDCD	0	I	OFF	7	1.8 V	VDDS_OSC1	Yes	LVCMOS	PU/PD	1	0/1	Yes
		PRG2_IEP0_EDIO_OUTVALID	6	O										
		GPIO1_13	7	IO								0		
B23	MMC0_SDWP	MMC0_SDWP	0	I	OFF	7	1.8 V	VDDS_OSC1	Yes	LVCMOS	PU/PD	1	0/1	Yes
		GPIO1_14	7	IO								0		
C27	MMC1_CLK	MMC1_CLK	0	O	PD	7	1.8 V/3.3 V	VDDSHV7		LVCMOS		1		No
		GPIO1_77	7	O								0		

Copyright © 2023 Texas Instruments Incorporated

Table 5-1. Pin Attributes (continued)

BALL NUMBER [1]	BALL NAME [2]	SIGNAL NAME [3]	MUXMODE [4]	TYPE [5]	BALL RESET STATE [6]	BALL RESET REL. MUXMODE [7]	I/O VOLTAGE VALUE [8]	POWER [9]	HYS [10]	BUFFER TYPE [11]	PULL UP/ DOWN TYPE [12]	DSIS [13]	RXACTIVE / TXDISABLE [14]	IO Daisy Chain [15]
C28	MMC1_CMD	MMC1_CMD	0	IO	PU	7	1.8 V/3.3 V	VDDSHV7		LVCMOS	PU/PD	1		No
		GPIO1_78	7	IO								0		
B24	MMC1_SDCD	MMC1_SDCD	0	I	OFF	7	1.8 V	VDDS_OSC1	Yes	LVCMOS	PU/PD	1	0/1	Yes
		GPIO1_79	7	IO								0		
C24	MMC1_SDWP	MMC1_SDWP	0	I	OFF	7	1.8 V	VDDS_OSC1	Yes	LVCMOS	PU/PD	1	0/1	Yes
		GPIO1_80	7	IO								0		
A26	MMC0_DAT0	MMC0_DAT0	0	IO	PU	7	1.8 V/3.3 V	VDDSHV6		LVCMOS	PU/PD	1		No
		GPIO1_9	7	IO								0		
E25	MMC0_DAT1	MMC0_DAT1	0	IO	PU	7	1.8 V/3.3 V	VDDSHV6		LVCMOS	PU/PD	1		No
		GPIO1_8	7	IO								0		
C26	MMC0_DAT2	MMC0_DAT2	0	IO	PU	7	1.8 V/3.3 V	VDDSHV6		LVCMOS	PU/PD	1		No
		GPIO1_7	7	IO								0		
A25	MMC0_DAT3	MMC0_DAT3	0	IO	PU	7	1.8 V/3.3 V	VDDSHV6		LVCMOS	PU/PD	1		No
		GPIO1_6	7	IO								0		
E24	MMC0_DAT4	MMC0_DAT4	0	IO	PU	7	1.8 V/3.3 V	VDDSHV6		LVCMOS	PU/PD	1		No
		UART0_RIN	1	I								1		
		EQEP2_S	5	IO								0		
		GPIO1_5	7	IO								0		
A24	MMC0_DAT5	MMC0_DAT5	0	IO	PU	7	1.8 V/3.3 V	VDDSHV6		LVCMOS	PU/PD	1		No
		UART0_DTRn	1	O										
		EQEP2_I	5	IO								0		
		GPIO1_4	7	IO								0		
B26	MMC0_DAT6	MMC0_DAT6	0	IO	PU	7	1.8 V/3.3 V	VDDSHV6		LVCMOS	PU/PD	1		No
		UART0_DSRn	1	I								1		
		EQEP2_B	5	I								0		
		GPIO1_3	7	IO								0		
D25	MMC0_DAT7	MMC0_DAT7	0	IO	PU	7	1.8 V/3.3 V	VDDSHV6		LVCMOS	PU/PD	1		No
		UART0_DCDn	1	I								1		
		EQEP2_A	5	I								0		
		GPIO1_2	7	IO								0		
D28	MMC1_DAT0	MMC1_DAT0	0	IO	PU	7	1.8 V/3.3 V	VDDSHV7		LVCMOS	PU/PD	1		No
		GPIO1_76	7	IO								0		
E27	MMC1_DAT1	MMC1_DAT1	0	IO	PU	7	1.8 V/3.3 V	VDDSHV7		LVCMOS	PU/PD	1		No
		GPIO1_75	7	IO								0		
D26	MMC1_DAT2	MMC1_DAT2	0	IO	PU	7	1.8 V/3.3 V	VDDSHV7		LVCMOS	PU/PD	1		No
		GPIO1_74	7	IO								0		

Copyright © 2023 Texas Instruments Incorporated

Table 5-1. Pin Attributes (continued)

BALL NUMBER [1]	BALL NAME [2]	SIGNAL NAME [3]	MUXMODE [4]	TYPE [5]	BALL RESET STATE [6]	BALL RESET REL. MUXMODE [7]	I/O VOLTAGE VALUE [8]	POWER [9]	HYS [10]	BUFFER TYPE [11]	PULL UP/ DOWN TYPE [12]	DSIS [13]	RXACTIVE / TXDISABLE [14]	IO Daisy Chain [15]
D27	MMC1_DAT3	MMC1_DAT3	0	IO	PU	7	1.8 V/3.3 V	VDDSHV7		LVCMOS	PU/PD	1		No
		GPIO1_73	7	IO								0		
F18	NMIn	NMIn	0	I	PU	0	1.8 V/3.3 V	VDDSHV0	Yes	LVCMOS-FS	PU/PD	1	1/1	Yes
		PRG2_PWM1_TZ_IN	6	I								0		
L25	OLDI0_CLKN	OLDI0_CLKN		IO	OFF		1.8 V	VDDA_1P8_OLDI0		OLDI_LVDS				No
K25	OLDI0_CLKP	OLDI0_CLKP		IO	OFF		1.8 V	VDDA_1P8_OLDI0		OLDI_LVDS				No
J28	OLDI0_A0N	OLDI0_A0N		IO	OFF		1.8 V	VDDA_1P8_OLDI0		OLDI_LVDS				No
K28	OLDI0_A0P	OLDI0_A0P		IO	OFF		1.8 V	VDDA_1P8_OLDI0		OLDI_LVDS				No
L27	OLDI0_A1N	OLDI0_A1N		IO	OFF		1.8 V	VDDA_1P8_OLDI0		OLDI_LVDS				No
K27	OLDI0_A1P	OLDI0_A1P		IO	OFF		1.8 V	VDDA_1P8_OLDI0		OLDI_LVDS				No
K24	OLDI0_A2N	OLDI0_A2N		IO	OFF		1.8 V	VDDA_1P8_OLDI0		OLDI_LVDS				No
J24	OLDI0_A2P	OLDI0_A2P		IO	OFF		1.8 V	VDDA_1P8_OLDI0		OLDI_LVDS				No
J26	OLDI0_A3N	OLDI0_A3N		IO	OFF		1.8 V	VDDA_1P8_OLDI0		OLDI_LVDS				No
K26	OLDI0_A3P	OLDI0_A3P		IO	OFF		1.8 V	VDDA_1P8_OLDI0		OLDI_LVDS				No
C22	OSC1_XI	OSC1_XI		I	OFF		1.8 V	VDDS_OSC1		Analog				No
E22	OSC1_XO	OSC1_XO		O	OFF		1.8 V	VDDS_OSC1		Analog				No
Y5	PMIC_POWER_EN0	PMIC_POWER_EN0	0	O	OFF	0	1.8 V/3.3 V	VDDSHV0_WKUP	Yes	LVCMOS	PU/PD		0/0	No
AA5	PMIC_POWER_EN1	PMIC_POWER_EN1	0	O	OFF	0	1.8 V/3.3 V	VDDSHV0_WKUP	Yes	LVCMOS	PU/PD		0/0	No
E19	PORz	PORz	0	I	OFF	0	1.8 V/3.3 V	VDDSHV0	Yes	LVCMOS				Yes
C19	PORz_OUT	PORz_OUT	0	O	OFF	0	1.8 V/3.3 V	VDDSHV0	Yes	LVCMOS	PU/PD		0/0	Yes
AE28	PRG0_MDIO0_MDC	PRG0_MDIO0_MDC	0	O	OFF	7	1.8 V/3.3 V	VDDSHV3	Yes	LVCMOS	PU/PD		0/1	Yes
		PRG2_PWM1_B2	3	IO								1		
		MCASP2_AXR3	5	IO								0		
		GPIO1_70	7	IO								0		
AE26	PRG0_MDIO0_MDIO	PRG0_MDIO0_MDIO	0	IO	OFF	7	1.8 V/3.3 V	VDDSHV3	Yes	LVCMOS	PU/PD	0	0/1	Yes
		PRG2_PWM1_A2	3	IO								0		
		MCASP2_AXR2	5	IO								0		
		GPIO1_69	7	IO								0		

Copyright © 2023 Texas Instruments Incorporated

Table 5-1. Pin Attributes (continued)

BALL NUMBER [1]	BALL NAME [2]	SIGNAL NAME [3]	MUXMODE [4]	TYPE [5]	BALL RESET STATE [6]	BALL RESET REL. MUXMODE [7]	I/O VOLTAGE VALUE [8]	POWER [9]	HYS [10]	BUFFER TYPE [11]	PULL UP/ DOWN TYPE [12]	DSIS [13]	RXACTIVE / TXDISABLE [14]	IO Daisy Chain [15]
V24	PRG0_PRU0_GPO0	PRG0_PRU0_GPO0	0	IO	OFF	7	1.8 V/3.3 V	VDDSHV3	Yes	LVCMOS	PU/PD	0	0/1	Yes
		PRG0_PRU0_GPI0	1	I								0		
		PRG0_RGMII1_RD0	2	I								0		
		PRG0_PWM3_A0	3	IO								0		
		MCASP0_ACLKX	5	IO								0		
		GPIO1_29	7	IO								0		
W25	PRG0_PRU0_GPO1	PRG0_PRU0_GPO1	0	IO	OFF	7	1.8 V/3.3 V	VDDSHV3	Yes	LVCMOS	PU/PD	0	0/1	Yes
		PRG0_PRU0_GPI1	1	I								0		
		PRG0_RGMII1_RD1	2	I								0		
		PRG0_PWM3_B0	3	IO								1		
		MCASP0_AFSX	5	IO								0		
		GPIO1_30	7	IO								0		
W24	PRG0_PRU0_GPO2	PRG0_PRU0_GPO2	0	IO	OFF	7	1.8 V/3.3 V	VDDSHV3	Yes	LVCMOS	PU/PD	0	0/1	Yes
		PRG0_PRU0_GPI2	1	I								0		
		PRG0_RGMII1_RD2	2	I								0		
		PRG0_PWM2_A0	3	IO								0		
		MCASP0_ACLKR	5	IO								0		
		GPIO1_31	7	IO								0		
AA27	PRG0_PRU0_GPO3	PRG0_PRU0_GPO3	0	IO	OFF	7	1.8 V/3.3 V	VDDSHV3	Yes	LVCMOS	PU/PD	0	0/1	Yes
		PRG0_PRU0_GPI3	1	I								0		
		PRG0_RGMII1_RD3	2	I								0		
		PRG0_PWM3_A2	3	IO								0		
		MCASP0_AFSR	5	IO								0		
		GPIO1_32	7	IO								0		
Y24	PRG0_PRU0_GPO4	PRG0_PRU0_GPO4	0	IO	OFF	7	1.8 V/3.3 V	VDDSHV3	Yes	LVCMOS	PU/PD	0	0/1	Yes
		PRG0_PRU0_GPI4	1	I								0		
		PRG0_RGMII1_RX_CTL	2	I								0		
		PRG0_PWM2_B0	3	IO								1		
		MCASP0_AXR0	5	IO								0		
		GPIO1_33	7	IO								0		
V28	PRG0_PRU0_GPO5	PRG0_PRU0_GPO5	0	IO	OFF	7	1.8 V/3.3 V	VDDSHV3	Yes	LVCMOS	PU/PD	0	0/1	Yes
		PRG0_PRU0_GPI5	1	I								0		
		PRG0_PWM3_B2	3	IO								1		
		MCASP0_AXR1	5	IO								0		
		GPIO1_34	7	IO								0		

Copyright © 2023 Texas Instruments Incorporated

Table 5-1. Pin Attributes (continued)

BALL NUMBER [1]	BALL NAME [2]	SIGNAL NAME [3]	MUXMODE [4]	TYPE [5]	BALL RESET STATE [6]	BALL RESET REL. MUXMODE [7]	I/O VOLTAGE VALUE [8]	POWER [9]	HYS [10]	BUFFER TYPE [11]	PULL UP/ DOWN TYPE [12]	DSIS [13]	RXACTIVE / TXDISABLE [14]	IO Daisy Chain [15]
Y25	PRG0_PRU0_GPO6	PRG0_PRU0_GPO6	0	IO	OFF	7	1.8 V/3.3 V	VDDSHV3	Yes	LVCMOS	PU/PD	0	0/1	Yes
		PRG0_PRU0_GPI6	1	I								0		
		PRG0_RGMII1_RXC	2	I								0		
		PRG0_PWM3_A1	3	IO								0		
		MCASP0_AXR2	5	IO								0		
		GPIO1_35	7	IO								0		
U27	PRG0_PRU0_GPO7	PRG0_PRU0_GPO7	0	IO	OFF	7	1.8 V/3.3 V	VDDSHV3	Yes	LVCMOS	PU/PD	0	0/1	Yes
		PRG0_PRU0_GPI7	1	I								0		
		PRG0_IEP0_EDC_LATCH_IN1	2	I								0		
		PRG0_PWM3_B1	3	IO								1		
		PRG0_ECAP0_SYNC_IN	4	I								0		
		MCASP0_AXR3	5	IO								0		
		GPIO1_36	7	IO								0		
V27	PRG0_PRU0_GPO8	PRG0_PRU0_GPO8	0	IO	OFF	7	1.8 V/3.3 V	VDDSHV3	Yes	LVCMOS	PU/PD	0	0/1	Yes
		PRG0_PRU0_GPI8	1	I								0		
		PRG0_PWM2_A1	3	IO								0		
		MCASP0_AXR4	5	IO								0		
		GPIO1_37	7	IO								0		
V26	PRG0_PRU0_GPO9	PRG0_PRU0_GPO9	0	IO	OFF	7	1.8 V/3.3 V	VDDSHV3	Yes	LVCMOS	PU/PD	0	0/1	Yes
		PRG0_PRU0_GPI9	1	I								0		
		PRG0_UART0_CTSn	2	I								1		
		PRG0_PWM3_TZ_IN	3	I								0		
		SPI3_CS1	4	IO								1		
		MCASP0_AXR5	5	IO								0		
		PRG0_IEP0_EDIO_DATA_IN_OUT28	6	IO								0		
		GPIO1_38	7	IO								0		
U25	PRG0_PRU0_GPO10	PRG0_PRU0_GPO10	0	IO	OFF	7	1.8 V/3.3 V	VDDSHV3	Yes	LVCMOS	PU/PD	0	0/1	Yes
		PRG0_PRU0_GPI10	1	I								0		
		PRG0_UART0_RTSn	2	O										
		PRG0_PWM2_B1	3	IO								1		
		SPI3_CS2	4	IO								1		
		MCASP0_AXR6	5	IO								0		
		PRG0_IEP0_EDIO_DATA_IN_OUT29	6	IO								0		
		GPIO1_39	7	IO								0		

Copyright © 2023 Texas Instruments Incorporated

Table 5-1. Pin Attributes (continued)

BALL NUMBER [1]	BALL NAME [2]	SIGNAL NAME [3]	MUXMODE [4]	TYPE [5]	BALL RESET STATE [6]	BALL RESET REL. MUXMODE [7]	I/O VOLTAGE VALUE [8]	POWER [9]	HYS [10]	BUFFER TYPE [11]	PULL UP/ DOWN TYPE [12]	DSIS [13]	RXACTIVE / TXDISABLE [14]	IO Daisy Chain [15]
AB25	PRG0_PRU0_GPO11	PRG0_PRU0_GPO11	0	IO	OFF	7	1.8 V/3.3 V	VDDSHV3	Yes	LVCMOS	PU/PD	0	0/1	Yes
		PRG0_PRU0_GPI11	1	I								0		
		PRG0_RGMII1_TX_CTL	2	O										
		PRG0_PWM3_TZ_OUT	3	O										
		PRG0_PRU0_GPO15	4	IO								0		
		MCASP0_AXR7	5	IO								0		
		GPIO1_40	7	IO								0		
AD27	PRG0_PRU0_GPO12	PRG0_PRU0_GPO12	0	IO	OFF	7	1.8 V/3.3 V	VDDSHV3	Yes	LVCMOS	PU/PD	0	0/1	Yes
		PRG0_PRU0_GPI12	1	I								0		
		PRG0_RGMII1_TD0	2	O										
		PRG0_PWM0_A0	3	IO								0		
		PRG0_PRU0_GPO11	4	IO								0		
		MCASP0_AXR8	5	IO								0		
		GPIO1_41	7	IO								0		
AC26	PRG0_PRU0_GPO13	PRG0_PRU0_GPO13	0	IO	OFF	7	1.8 V/3.3 V	VDDSHV3	Yes	LVCMOS	PU/PD	0	0/1	Yes
		PRG0_PRU0_GPI13	1	I								0		
		PRG0_RGMII1_TD1	2	O										
		PRG0_PWM0_B0	3	IO								1		
		PRG0_PRU0_GPO12	4	IO								0		
		MCASP0_AXR9	5	IO								0		
		GPIO1_42	7	IO								0		
AD26	PRG0_PRU0_GPO14	PRG0_PRU0_GPO14	0	IO	OFF	7	1.8 V/3.3 V	VDDSHV3	Yes	LVCMOS	PU/PD	0	0/1	Yes
		PRG0_PRU0_GPI14	1	I								0		
		PRG0_RGMII1_TD2	2	O										
		PRG0_PWM0_A1	3	IO								0		
		PRG0_PRU0_GPO13	4	IO								0		
		MCASP0_AXR10	5	IO								0		
		GPIO1_43	7	IO								0		
AA24	PRG0_PRU0_GPO15	PRG0_PRU0_GPO15	0	IO	OFF	7	1.8 V/3.3 V	VDDSHV3	Yes	LVCMOS	PU/PD	0	0/1	Yes
		PRG0_PRU0_GPI15	1	I								0		
		PRG0_RGMII1_TD3	2	O										
		PRG0_PWM0_B1	3	IO								1		
		PRG0_PRU0_GPO14	4	IO								0		
		MCASP0_AXR11	5	IO								0		
		GPIO1_44	7	IO								0		

Copyright © 2023 Texas Instruments Incorporated

Table 5-1. Pin Attributes (continued)

BALL NUMBER [1]	BALL NAME [2]	SIGNAL NAME [3]	MUXMODE [4]	TYPE [5]	BALL RESET STATE [6]	BALL RESET REL. MUXMODE [7]	I/O VOLTAGE VALUE [8]	POWER [9]	HYS [10]	BUFFER TYPE [11]	PULL UP/ DOWN TYPE [12]	DSIS [13]	RXACTIVE / TXDISABLE [14]	IO Daisy Chain [15]
AD28	PRG0_PRU0_GPO16	PRG0_PRU0_GPO16	0	IO	OFF	7	1.8 V/3.3 V	VDDSHV3	Yes	LVCMOS	PU/PD	0	0/1	Yes
		PRG0_PRU0_GPI16	1	I								0		
		PRG0_RGMII1_TXC	2	IO								0		
		PRG0_PWM0_A2	3	IO								0		
		MCASP0_AXR12	5	IO								0		
		MCASP1_AHCLKR	6	IO								0		
		GPIO1_45	7	IO								0		
U26	PRG0_PRU0_GPO17	PRG0_PRU0_GPO17	0	IO	OFF	7	1.8 V/3.3 V	VDDSHV3	Yes	LVCMOS	PU/PD	0	0/1	Yes
		PRG0_PRU0_GPI17	1	I								0		
		PRG0_IEP0_EDC_SYNC_OUT1	2	O										
		PRG0_PWM0_B2	3	IO								1		
		PRG0_ECAP0_SYNC_OUT	4	O										
		MCASP0_AXR13	5	IO								0		
		MCASP1_AHCLKX	6	IO								0		
		GPIO1_46	7	IO								0		
V25	PRG0_PRU0_GPO18	PRG0_PRU0_GPO18	0	IO	OFF	7	1.8 V/3.3 V	VDDSHV3	Yes	LVCMOS	PU/PD	0	0/1	Yes
		PRG0_PRU0_GPI18	1	I								0		
		PRG0_IEP0_EDC_LATCH_IN0	2	I								0		
		PRG0_PWM0_TZ_IN	3	I								0		
		PRG0_ECAP0_IN_APWM_OUT	4	IO								0		
		MCASP0_AXR14	5	IO								0		
		MCASP2_AHCLKR	6	IO								0		
		GPIO1_47	7	IO								0		
U24	PRG0_PRU0_GPO19	PRG0_PRU0_GPO19	0	IO	OFF	7	1.8 V/3.3 V	VDDSHV3	Yes	LVCMOS	PU/PD	0	0/1	Yes
		PRG0_PRU0_GPI19	1	I								0		
		PRG0_IEP0_EDC_SYNC_OUT0	2	O										
		PRG0_PWM0_TZ_OUT	3	O										
		MCASP0_AXR15	5	IO								0		
		MCASP2_AHCLKX	6	IO								0		
		GPIO1_48	7	IO								0		
AB28	PRG0_PRU1_GPO0	PRG0_PRU1_GPO0	0	IO	OFF	7	1.8 V/3.3 V	VDDSHV3	Yes	LVCMOS	PU/PD	0	0/1	Yes
		PRG0_PRU1_GPI0	1	I								0		
		PRG0_RGMII2_RD0	2	I								0		
		MCASP1_ACLKX	5	IO								0		
		GPIO1_49	7	IO								0		

Copyright © 2023 Texas Instruments Incorporated

Table 5-1. Pin Attributes (continued)

BALL NUMBER [1]	BALL NAME [2]	SIGNAL NAME [3]	MUXMODE [4]	TYPE [5]	BALL RESET STATE [6]	BALL RESET REL. MUXMODE [7]	I/O VOLTAGE VALUE [8]	POWER [9]	HYS [10]	BUFFER TYPE [11]	PULL UP/ DOWN TYPE [12]	DSIS [13]	RXACTIVE / TXDISABLE [14]	IO Daisy Chain [15]
AC28	PRG0_PRU1_GPO1	PRG0_PRU1_GPO1	0	IO	OFF	7	1.8 V/3.3 V	VDDSHV3	Yes	LVCMOS	PU/PD	0	0/1	Yes
		PRG0_PRU1_GPI1	1	I								0		
		PRG0_RGMII2_RD1	2	I								0		
		MCASP1_AFSX	5	IO								0		
		GPIO1_50	7	IO								0		
AC27	PRG0_PRU1_GPO2	PRG0_PRU1_GPO2	0	IO	OFF	7	1.8 V/3.3 V	VDDSHV3	Yes	LVCMOS	PU/PD	0	0/1	Yes
		PRG0_PRU1_GPI2	1	I								0		
		PRG0_RGMII2_RD2	2	I								0		
		PRG0_PWM2_A2	3	IO								0		
		MCASP1_ACLKR	5	IO								0		
		GPIO1_51	7	IO								0		
AB26	PRG0_PRU1_GPO3	PRG0_PRU1_GPO3	0	IO	OFF	7	1.8 V/3.3 V	VDDSHV3	Yes	LVCMOS	PU/PD	0	0/1	Yes
		PRG0_PRU1_GPI3	1	I								0		
		PRG0_RGMII2_RD3	2	I								0		
		EQEP0_A	4	I								0		
		MCASP1_AFSR	5	IO								0		
		GPIO1_52	7	IO								0		
AA25	PRG0_PRU1_GPO4	PRG0_PRU1_GPO4	0	IO	OFF	7	1.8 V/3.3 V	VDDSHV3	Yes	LVCMOS	PU/PD	0	0/1	Yes
		PRG0_PRU1_GPI4	1	I								0		
		PRG0_RGMII2_RX_CTL	2	I								0		
		PRG0_PWM2_B2	3	IO								1		
		EQEP0_B	4	I								0		
		MCASP1_AXR0	5	IO								0		
		MCASP0_AHCLKR	6	IO								0		
		GPIO1_53	7	IO								0		
U23	PRG0_PRU1_GPO5	PRG0_PRU1_GPO5	0	IO	OFF	7	1.8 V/3.3 V	VDDSHV3	Yes	LVCMOS	PU/PD	0	0/1	Yes
		PRG0_PRU1_GPI5	1	I								0		
		EQEP0_S	4	IO								0		
		MCASP1_AXR1	5	IO								0		
		MCASP0_AHCLKX	6	IO								0		
		GPIO1_54	7	IO								0		
AB27	PRG0_PRU1_GPO6	PRG0_PRU1_GPO6	0	IO	OFF	7	1.8 V/3.3 V	VDDSHV3	Yes	LVCMOS	PU/PD	0	0/1	Yes
		PRG0_PRU1_GPI6	1	I								0		
		PRG0_RGMII2_RXC	2	I								0		
		MCASP1_AXR2	5	IO								0		
		GPIO1_55	7	IO								0		

Copyright © 2023 Texas Instruments Incorporated

Table 5-1. Pin Attributes (continued)

BALL NUMBER [1]	BALL NAME [2]	SIGNAL NAME [3]	MUXMODE [4]	TYPE [5]	BALL RESET STATE [6]	BALL RESET REL. MUXMODE [7]	I/O VOLTAGE VALUE [8]	POWER [9]	HYS [10]	BUFFER TYPE [11]	PULL UP/ DOWN TYPE [12]	DSIS [13]	RXACTIVE / TXDISABLE [14]	IO Daisy Chain [15]
W28	PRG0_PRU1_GPO7	PRG0_PRU1_GPO7	0	IO	OFF	7	1.8 V/3.3 V	VDDSHV3	Yes	LVCMOS	PU/PD	0	0/1	Yes
		PRG0_PRU1_GPI7	1	I								0		
		PRG0_IEP1_EDC_LATCH_IN1	2	I								0		
		SPI3_CS0	4	IO								1		
		MCASP1_AXR3	5	IO								0		
		UART2_TXD	6	O										
		GPIO1_56	7	IO								0		
W27	PRG0_PRU1_GPO8	PRG0_PRU1_GPO8	0	IO	OFF	7	1.8 V/3.3 V	VDDSHV3	Yes	LVCMOS	PU/PD	0	0/1	Yes
		PRG0_PRU1_GPI8	1	I								0		
		PRG0_PWM2_TZ_OUT	3	O										
		MCASP1_AXR4	5	IO								0		
		GPIO1_57	7	IO								0		
Y28	PRG0_PRU1_GPO9	PRG0_PRU1_GPO9	0	IO	OFF	7	1.8 V/3.3 V	VDDSHV3	Yes	LVCMOS	PU/PD	0	0/1	Yes
		PRG0_PRU1_GPI9	1	I								0		
		PRG0_UART0_RXD	2	I								1		
		SPI3_CS3	4	IO								1		
		MCASP1_AXR5	5	IO								0		
		PRG0_IEP0_EDIO_DATA_IN_OUT30	6	IO								0		
		GPIO1_58	7	IO								0		
AA28	PRG0_PRU1_GPO10	PRG0_PRU1_GPO10	0	IO	OFF	7	1.8 V/3.3 V	VDDSHV3	Yes	LVCMOS	PU/PD	0	0/1	Yes
		PRG0_PRU1_GPI10	1	I								0		
		PRG0_UART0_TXD	2	O										
		PRG0_PWM2_TZ_IN	3	I								0		
		EQEP0_I	4	IO								0		
		MCASP1_AXR6	5	IO								0		
		PRG0_IEP0_EDIO_DATA_IN_OUT31	6	IO								0		
		GPIO1_59	7	IO								0		
AB24	PRG0_PRU1_GPO11	PRG0_PRU1_GPO11	0	IO	OFF	7	1.8 V/3.3 V	VDDSHV3	Yes	LVCMOS	PU/PD	0	0/1	Yes
		PRG0_PRU1_GPI11	1	I								0		
		PRG0_RGMII2_TX_CTL	2	O										
		PRG0_PRU1_GPO15	4	IO								0		
		MCASP1_AXR7	5	IO								0		
		GPIO1_60	7	IO								0		

Copyright © 2023 Texas Instruments Incorporated

Table 5-1. Pin Attributes (continued)

BALL NUMBER [1]	BALL NAME [2]	SIGNAL NAME [3]	MUXMODE [4]	TYPE [5]	BALL RESET STATE [6]	BALL RESET REL. MUXMODE [7]	I/O VOLTAGE VALUE [8]	POWER [9]	HYS [10]	BUFFER TYPE [11]	PULL UP/ DOWN TYPE [12]	DSIS [13]	RXACTIVE / TXDISABLE [14]	IO Daisy Chain [15]
AC25	PRG0_PRU1_GPO12	PRG0_PRU1_GPO12	0	IO	OFF	7	1.8 V/3.3 V	VDDSHV3	Yes	LVCMOS	PU/PD	0	0/1	Yes
		PRG0_PRU1_GPI12	1	I								0		
		PRG0_RGMII2_TD0	2	O										
		PRG0_PWM1_A0	3	IO								0		
		PRG0_PRU1_GPO11	4	IO								0		
		MCASP1_AXR8	5	IO								0		
		GPIO1_61	7	IO								0		
AD25	PRG0_PRU1_GPO13	PRG0_PRU1_GPO13	0	IO	OFF	7	1.8 V/3.3 V	VDDSHV3	Yes	LVCMOS	PU/PD	0	0/1	Yes
		PRG0_PRU1_GPI13	1	I								0		
		PRG0_RGMII2_TD1	2	O										
		PRG0_PWM1_B0	3	IO								1		
		PRG0_PRU1_GPO12	4	IO								0		
		MCASP1_AXR9	5	IO								0		
		GPIO1_62	7	IO								0		
AD24	PRG0_PRU1_GPO14	PRG0_PRU1_GPO14	0	IO	OFF	7	1.8 V/3.3 V	VDDSHV3	Yes	LVCMOS	PU/PD	0	0/1	Yes
		PRG0_PRU1_GPI14	1	I								0		
		PRG0_RGMII2_TD2	2	O										
		PRG0_PWM1_A1	3	IO								0		
		PRG0_PRU1_GPO13	4	IO								0		
		MCASP2_AFSR	5	IO								0		
		GPIO1_63	7	IO								0		
AE27	PRG0_PRU1_GPO15	PRG0_PRU1_GPO15	0	IO	OFF	7	1.8 V/3.3 V	VDDSHV3	Yes	LVCMOS	PU/PD	0	0/1	Yes
		PRG0_PRU1_GPI15	1	I								0		
		PRG0_RGMII2_TD3	2	O										
		PRG0_PWM1_B1	3	IO								1		
		PRG0_PRU1_GPO14	4	IO								0		
		MCASP2_ACLKR	5	IO								0		
		GPIO1_64	7	IO								0		
AC24	PRG0_PRU1_GPO16	PRG0_PRU1_GPO16	0	IO	OFF	7	1.8 V/3.3 V	VDDSHV3	Yes	LVCMOS	PU/PD	0	0/1	Yes
		PRG0_PRU1_GPI16	1	I								0		
		PRG0_RGMII2_TXC	2	IO								0		
		PRG0_PWM1_A2	3	IO								0		
		MCASP2_AXR0	5	IO								0		
		GPIO1_65	7	IO								0		

Copyright © 2023 Texas Instruments Incorporated

Table 5-1. Pin Attributes (continued)

BALL NUMBER [1]	BALL NAME [2]	SIGNAL NAME [3]	MUXMODE [4]	TYPE [5]	BALL RESET STATE [6]	BALL RESET REL. MUXMODE [7]	I/O VOLTAGE VALUE [8]	POWER [9]	HYS [10]	BUFFER TYPE [11]	PULL UP/ DOWN TYPE [12]	DSIS [13]	RXACTIVE / TXDISABLE [14]	IO Daisy Chain [15]
Y27	PRG0_PRU1_GPO17	PRG0_PRU1_GPO17	0	IO	OFF	7	1.8 V/3.3 V	VDDSHV3	Yes	LVCMOS	PU/PD	0	0/1	Yes
		PRG0_PRU1_GPI17	1	I								0		
		PRG0_IEP1_EDC_SYNC_OUT1	2	O										
		PRG0_PWM1_B2	3	IO								1		
		SPI3_CLK	4	IO								0		
		MCASP2_AXR1	5	IO								0		
		UART2_RXD	6	I								1		
		GPIO1_66	7	IO								0		
Y26	PRG0_PRU1_GPO18	PRG0_PRU1_GPO18	0	IO	OFF	7	1.8 V/3.3 V	VDDSHV3	Yes	LVCMOS	PU/PD	0	0/1	Yes
		PRG0_PRU1_GPI18	1	I								0		
		PRG0_IEP1_EDC_LATCH_IN0	2	I								0		
		PRG0_PWM1_TZ_IN	3	I								0		
		SPI3_D0	4	IO								0		
		MCASP2_AFSX	5	IO								0		
		UART2_CTSn	6	I								1		
		GPIO1_67	7	IO								0		
W26	PRG0_PRU1_GPO19	PRG0_PRU1_GPO19	0	IO	OFF	7	1.8 V/3.3 V	VDDSHV3	Yes	LVCMOS	PU/PD	0	0/1	Yes
		PRG0_PRU1_GPI19	1	I								0		
		PRG0_IEP1_EDC_SYNC_OUT0	2	O										
		PRG0_PWM1_TZ_OUT	3	O										
		SPI3_D1	4	IO								0		
		MCASP2_ACLKX	5	IO								0		
		UART2_RTSn	6	O										
		GPIO1_68	7	IO								0		
AH18	PRG1_MDIO0_MDC	PRG1_MDIO0_MDC	0	O	OFF	7	1.8 V/3.3 V	VDDSHV4	Yes	LVCMOS	PU/PD		0/1	Yes
		SPI1_CS3	1	IO								1		
		PRG2_PWM1_B1	3	IO								1		
		GPIO1_1	7	IO								0		
AD18	PRG1_MDIO0_MDIO	PRG1_MDIO0_MDIO	0	IO	OFF	7	1.8 V/3.3 V	VDDSHV4	Yes	LVCMOS	PU/PD	0	0/1	Yes
		SPI1_CS2	1	IO								1		
		PRG2_PWM1_A1	3	IO								0		
		GPIO1_0	7	IO								0		
AE22	PRG1_PRU0_GPO0	PRG1_PRU0_GPO0	0	IO	OFF	7	1.8 V/3.3 V	VDDSHV4	Yes	LVCMOS	PU/PD	0	0/1	Yes
		PRG1_PRU0_GPI0	1	I								0		
		PRG1_RGMII1_RD0	2	I								0		
		PRG1_PWM3_A0	3	IO								0		
		GPIO0_56	7	IO								0		

Copyright © 2023 Texas Instruments Incorporated

Table 5-1. Pin Attributes (continued)

BALL NUMBER [1]	BALL NAME [2]	SIGNAL NAME [3]	MUXMODE [4]	TYPE [5]	BALL RESET STATE [6]	BALL RESET REL. MUXMODE [7]	I/O VOLTAGE VALUE [8]	POWER [9]	HYS [10]	BUFFER TYPE [11]	PULL UP/ DOWN TYPE [12]	DSIS [13]	RXACTIVE / TXDISABLE [14]	IO Daisy Chain [15]
AG24	PRG1_PRU0_GPO1	PRG1_PRU0_GPO1	0	IO	OFF	7	1.8 V/3.3 V	VDDSHV4	Yes	LVCMOS	PU/PD	0	0/1	Yes
		PRG1_PRU0_GPI1	1	I								0		
		PRG1_RGMII1_RD1	2	I								0		
		PRG1_PWM3_B0	3	IO								1		
		GPIO0_57	7	IO								0		
AF23	PRG1_PRU0_GPO2	PRG1_PRU0_GPO2	0	IO	OFF	7	1.8 V/3.3 V	VDDSHV4	Yes	LVCMOS	PU/PD	0	0/1	Yes
		PRG1_PRU0_GPI2	1	I								0		
		PRG1_RGMII1_RD2	2	I								0		
		PRG1_PWM2_A0	3	IO								0		
		GPIO0_58	7	IO								0		
AD21	PRG1_PRU0_GPO3	PRG1_PRU0_GPO3	0	IO	OFF	7	1.8 V/3.3 V	VDDSHV4	Yes	LVCMOS	PU/PD	0	0/1	Yes
		PRG1_PRU0_GPI3	1	I								0		
		PRG1_RGMII1_RD3	2	I								0		
		PRG1_PWM3_A2	3	IO								0		
		GPIO0_59	7	IO								0		
AG23	PRG1_PRU0_GPO4	PRG1_PRU0_GPO4	0	IO	OFF	7	1.8 V/3.3 V	VDDSHV4	Yes	LVCMOS	PU/PD	0	0/1	Yes
		PRG1_PRU0_GPI4	1	I								0		
		PRG1_RGMII1_RX_CTL	2	I								0		
		PRG1_PWM2_B0	3	IO								1		
		GPIO0_60	7	IO								0		
AF27	PRG1_PRU0_GPO5	PRG1_PRU0_GPO5	0	IO	OFF	7	1.8 V/3.3 V	VDDSHV4	Yes	LVCMOS	PU/PD	0	0/1	Yes
		PRG1_PRU0_GPI5	1	I								0		
		PRG1_PWM3_B2	3	IO								1		
		GPIO0_61	7	IO								0		
AF22	PRG1_PRU0_GPO6	PRG1_PRU0_GPO6	0	IO	OFF	7	1.8 V/3.3 V	VDDSHV4	Yes	LVCMOS	PU/PD	0	0/1	Yes
		PRG1_PRU0_GPI6	1	I								0		
		PRG1_RGMII1_RXC	2	I								0		
		PRG1_PWM3_A1	3	IO								0		
		GPIO0_62	7	IO								0		
AG27	PRG1_PRU0_GPO7	PRG1_PRU0_GPO7	0	IO	OFF	7	1.8 V/3.3 V	VDDSHV4	Yes	LVCMOS	PU/PD	0	0/1	Yes
		PRG1_PRU0_GPI7	1	I								0		
		PRG1_IEP0_EDC_LATCH_IN1	2	I								0		
		PRG1_PWM3_B1	3	IO								1		
		GPIO0_63	7	IO								0		

Copyright © 2023 Texas Instruments Incorporated

Table 5-1. Pin Attributes (continued)

BALL NUMBER [1]	BALL NAME [2]	SIGNAL NAME [3]	MUXMODE [4]	TYPE [5]	BALL RESET STATE [6]	BALL RESET REL. MUXMODE [7]	I/O VOLTAGE VALUE [8]	POWER [9]	HYS [10]	BUFFER TYPE [11]	PULL UP/ DOWN TYPE [12]	DSIS [13]	RXACTIVE / TXDISABLE [14]	IO Daisy Chain [15]
AF28	PRG1_PRU0_GPO8	PRG1_PRU0_GPO8	0	IO	OFF	7	1.8 V/3.3 V	VDDSHV4	Yes	LVCMOS	PU/PD	0	0/1	Yes
		PRG1_PRU0_GPI8	1	I								0		
		PRG1_PWM2_A1	3	IO								0		
		GPIO0_64	7	IO								0		
AF26	PRG1_PRU0_GPO9	PRG1_PRU0_GPO9	0	IO	OFF	7	1.8 V/3.3 V	VDDSHV4	Yes	LVCMOS	PU/PD	0	0/1	Yes
		PRG1_PRU0_GPI9	1	I								0		
		PRG1_UART0_CTSn	2	I								1		
		PRG1_PWM3_TZ_IN	3	I								0		
		SPI2_CS1	4	IO								1		
		PRG1_IEP0_EDIO_DATA_IN_OUT28	6	IO								0		
		GPIO0_65	7	IO								0		
AH25	PRG1_PRU0_GPO10	PRG1_PRU0_GPO10	0	IO	OFF	7	1.8 V/3.3 V	VDDSHV4	Yes	LVCMOS	PU/PD	0	0/1	Yes
		PRG1_PRU0_GPI10	1	I								0		
		PRG1_UART0_RTSn	2	O										
		PRG1_PWM2_B1	3	IO								1		
		SPI2_CS2	4	IO								1		
		PRG1_IEP0_EDIO_DATA_IN_OUT29	6	IO								0		
		GPIO0_66	7	IO								0		
AF21	PRG1_PRU0_GPO11	PRG1_PRU0_GPO11	0	IO	OFF	7	1.8 V/3.3 V	VDDSHV4	Yes	LVCMOS	PU/PD	0	0/1	Yes
		PRG1_PRU0_GPI11	1	I								0		
		PRG1_RGMII1_TX_CTL	2	O										
		PRG1_PWM3_TZ_OUT	3	O										
		PRG1_PRU0_GPO15	5	IO								0		
		GPIO0_67	7	IO								0		
AH20	PRG1_PRU0_GPO12	PRG1_PRU0_GPO12	0	IO	OFF	7	1.8 V/3.3 V	VDDSHV4	Yes	LVCMOS	PU/PD	0	0/1	Yes
		PRG1_PRU0_GPI12	1	I								0		
		PRG1_RGMII1_TD0	2	O										
		PRG1_PWM0_A0	3	IO								0		
		PRG1_PRU0_GPO11	5	IO								0		
		GPIO0_68	7	IO								0		
AH21	PRG1_PRU0_GPO13	PRG1_PRU0_GPO13	0	IO	OFF	7	1.8 V/3.3 V	VDDSHV4	Yes	LVCMOS	PU/PD	0	0/1	Yes
		PRG1_PRU0_GPI13	1	I								0		
		PRG1_RGMII1_TD1	2	O										
		PRG1_PWM0_B0	3	IO								1		
		PRG1_PRU0_GPO12	5	IO								0		
		GPIO0_69	7	IO								0		

Copyright © 2023 Texas Instruments Incorporated

Table 5-1. Pin Attributes (continued)

BALL NUMBER [1]	BALL NAME [2]	SIGNAL NAME [3]	MUXMODE [4]	TYPE [5]	BALL RESET STATE [6]	BALL RESET REL. MUXMODE [7]	I/O VOLTAGE VALUE [8]	POWER [9]	HYS [10]	BUFFER TYPE [11]	PULL UP/ DOWN TYPE [12]	DSIS [13]	RXACTIVE / TXDISABLE [14]	IO Daisy Chain [15]
AG20	PRG1_PRU0_GPO14	PRG1_PRU0_GPO14	0	IO	OFF	7	1.8 V/3.3 V	VDDSHV4	Yes	LVCMOS	PU/PD	0	0/1	Yes
		PRG1_PRU0_GPI14	1	I								0		
		PRG1_RGMII1_TD2	2	O										
		PRG1_PWM0_A1	3	IO								0		
		PRG1_PRU0_GPO13	5	IO								0		
		GPIO0_70	7	IO								0		
AD19	PRG1_PRU0_GPO15	PRG1_PRU0_GPO15	0	IO	OFF	7	1.8 V/3.3 V	VDDSHV4	Yes	LVCMOS	PU/PD	0	0/1	Yes
		PRG1_PRU0_GPI15	1	I								0		
		PRG1_RGMII1_TD3	2	O										
		PRG1_PWM0_B1	3	IO								1		
		PRG1_PRU0_GPO14	5	IO								0		
		GPIO0_71	7	IO								0		
AD20	PRG1_PRU0_GPO16	PRG1_PRU0_GPO16	0	IO	OFF	7	1.8 V/3.3 V	VDDSHV4	Yes	LVCMOS	PU/PD	0	0/1	Yes
		PRG1_PRU0_GPI16	1	I								0		
		PRG1_RGMII1_TXC	2	IO								0		
		PRG1_PWM0_A2	3	IO								0		
		GPIO0_72	7	IO								0		
AH26	PRG1_PRU0_GPO17	PRG1_PRU0_GPO17	0	IO	OFF	7	1.8 V/3.3 V	VDDSHV4	Yes	LVCMOS	PU/PD	0	0/1	Yes
		PRG1_PRU0_GPI17	1	I								0		
		PRG1_IEP0_EDC_SYNC_OUT1	2	O										
		PRG1_PWM0_B2	3	IO								1		
		GPIO0_73	7	IO								0		
AG25	PRG1_PRU0_GPO18	PRG1_PRU0_GPO18	0	IO	OFF	7	1.8 V/3.3 V	VDDSHV4	Yes	LVCMOS	PU/PD	0	0/1	Yes
		PRG1_PRU0_GPI18	1	I								0		
		PRG1_IEP0_EDC_LATCH_IN0	2	I								0		
		PRG1_PWM0_TZ_IN	3	I								0		
		GPIO0_74	7	IO								0		
AG26	PRG1_PRU0_GPO19	PRG1_PRU0_GPO19	0	IO	OFF	7	1.8 V/3.3 V	VDDSHV4	Yes	LVCMOS	PU/PD	0	0/1	Yes
		PRG1_PRU0_GPI19	1	I								0		
		PRG1_IEP0_EDC_SYNC_OUT0	2	O										
		PRG1_PWM0_TZ_OUT	3	O										
		GPIO0_75	7	IO								0		
AH24	PRG1_PRU1_GPO0	PRG1_PRU1_GPO0	0	IO	OFF	7	1.8 V/3.3 V	VDDSHV4	Yes	LVCMOS	PU/PD	0	0/1	Yes
		PRG1_PRU1_GPI0	1	I								0		
		PRG1_RGMII2_RD0	2	I								0		
		GPIO0_76	7	IO								0		

Copyright © 2023 Texas Instruments Incorporated

Table 5-1. Pin Attributes (continued)

BALL NUMBER [1]	BALL NAME [2]	SIGNAL NAME [3]	MUXMODE [4]	TYPE [5]	BALL RESET STATE [6]	BALL RESET REL. MUXMODE [7]	I/O VOLTAGE VALUE [8]	POWER [9]	HYS [10]	BUFFER TYPE [11]	PULL UP/ DOWN TYPE [12]	DSIS [13]	RXACTIVE / TXDISABLE [14]	IO Daisy Chain [15]
AH23	PRG1_PRU1_GPO1	PRG1_PRU1_GPO1	0	IO	OFF	7	1.8 V/3.3 V	VDDSHV4	Yes	LVCMOS	PU/PD	0	0/1	Yes
		PRG1_PRU1_GPI1	1	I								0		
		PRG1_RGMII2_RD1	2	I								0		
		GPIO0_77	7	IO								0		
AG21	PRG1_PRU1_GPO2	PRG1_PRU1_GPO2	0	IO	OFF	7	1.8 V/3.3 V	VDDSHV4	Yes	LVCMOS	PU/PD	0	0/1	Yes
		PRG1_PRU1_GPI2	1	I								0		
		PRG1_RGMII2_RD2	2	I								0		
		PRG1_PWM2_A2	3	IO								0		
		GPIO0_78	7	IO								0		
AH22	PRG1_PRU1_GPO3	PRG1_PRU1_GPO3	0	IO	OFF	7	1.8 V/3.3 V	VDDSHV4	Yes	LVCMOS	PU/PD	0	0/1	Yes
		PRG1_PRU1_GPI3	1	I								0		
		PRG1_RGMII2_RD3	2	I								0		
		EQEP1_A	4	I								0		
		GPIO0_79	7	IO								0		
AE21	PRG1_PRU1_GPO4	PRG1_PRU1_GPO4	0	IO	OFF	7	1.8 V/3.3 V	VDDSHV4	Yes	LVCMOS	PU/PD	0	0/1	Yes
		PRG1_PRU1_GPI4	1	I								0		
		PRG1_RGMII2_RX_CTL	2	I								0		
		PRG1_PWM2_B2	3	IO								1		
		EQEP1_B	4	I								0		
		GPIO0_80	7	IO								0		
AC22	PRG1_PRU1_GPO5	PRG1_PRU1_GPO5	0	IO	OFF	7	1.8 V/3.3 V	VDDSHV4	Yes	LVCMOS	PU/PD	0	0/1	Yes
		PRG1_PRU1_GPI5	1	I								0		
		EQEP1_S	4	IO								0		
		GPIO0_81	7	IO								0		
AG22	PRG1_PRU1_GPO6	PRG1_PRU1_GPO6	0	IO	OFF	7	1.8 V/3.3 V	VDDSHV4	Yes	LVCMOS	PU/PD	0	0/1	Yes
		PRG1_PRU1_GPI6	1	I								0		
		PRG1_RGMII2_RXC	2	I								0		
		GPIO0_82	7	IO								0		
AD23	PRG1_PRU1_GPO7	PRG1_PRU1_GPO7	0	IO	OFF	7	1.8 V/3.3 V	VDDSHV4	Yes	LVCMOS	PU/PD	0	0/1	Yes
		PRG1_PRU1_GPI7	1	I								0		
		PRG1_IEP1_EDC_LATCH_IN1	2	I								0		
		SPI2_CS0	4	IO								1		
		UART1_TXD	6	O										
		GPIO0_83	7	IO								0		

Copyright © 2023 Texas Instruments Incorporated

Table 5-1. Pin Attributes (continued)

BALL NUMBER [1]	BALL NAME [2]	SIGNAL NAME [3]	MUXMODE [4]	TYPE [5]	BALL RESET STATE [6]	BALL RESET REL. MUXMODE [7]	I/O VOLTAGE VALUE [8]	POWER [9]	HYS [10]	BUFFER TYPE [11]	PULL UP/ DOWN TYPE [12]	DSIS [13]	RXACTIVE / TXDISABLE [14]	IO Daisy Chain [15]
AE24	PRG1_PRU1_GPO8	PRG1_PRU1_GPO8	0	IO	OFF	7	1.8 V/3.3 V	VDDSHV4	Yes	LVCMOS	PU/PD	0	0/1	Yes
		PRG1_PRU1_GPI8	1	I								0		
		PRG1_PWM2_TZ_OUT	3	O										
		GPIO0_84	7	IO								0		
AF25	PRG1_PRU1_GPO9	PRG1_PRU1_GPO9	0	IO	OFF	7	1.8 V/3.3 V	VDDSHV4	Yes	LVCMOS	PU/PD	0	0/1	Yes
		PRG1_PRU1_GPI9	1	I								0		
		PRG1_UART0_RXD	2	I								1		
		PRG1_IEP0_EDIO_DATA_IN_OUT30	6	IO								0		
		GPIO0_85	7	IO								0		
AF24	PRG1_PRU1_GPO10	PRG1_PRU1_GPO10	0	IO	OFF	7	1.8 V/3.3 V	VDDSHV4	Yes	LVCMOS	PU/PD	0	0/1	Yes
		PRG1_PRU1_GPI10	1	I								0		
		PRG1_UART0_TXD	2	O										
		PRG1_PWM2_TZ_IN	3	I								0		
		SPI2_CS3	4	IO								1		
		PRG1_IEP0_EDIO_DATA_IN_OUT31	6	IO								0		
		GPIO0_86	7	IO								0		
AC20	PRG1_PRU1_GPO11	PRG1_PRU1_GPO11	0	IO	OFF	7	1.8 V/3.3 V	VDDSHV4	Yes	LVCMOS	PU/PD	0	0/1	Yes
		PRG1_PRU1_GPI11	1	I								0		
		PRG1_RGMII2_TX_CTL	2	O										
		EQEP1_I	4	IO								0		
		PRG1_PRU1_GPO15	5	IO								0		
		GPIO0_87	7	IO								0		
AE20	PRG1_PRU1_GPO12	PRG1_PRU1_GPO12	0	IO	OFF	7	1.8 V/3.3 V	VDDSHV4	Yes	LVCMOS	PU/PD	0	0/1	Yes
		PRG1_PRU1_GPI12	1	I								0		
		PRG1_RGMII2_TD0	2	O										
		PRG1_PWM1_A0	3	IO								0		
		PRG1_PRU1_GPO11	5	IO								0		
		GPIO0_88	7	IO								0		
AF19	PRG1_PRU1_GPO13	PRG1_PRU1_GPO13	0	IO	OFF	7	1.8 V/3.3 V	VDDSHV4	Yes	LVCMOS	PU/PD	0	0/1	Yes
		PRG1_PRU1_GPI13	1	I								0		
		PRG1_RGMII2_TD1	2	O										
		PRG1_PWM1_B0	3	IO								1		
		PRG1_PRU1_GPO12	5	IO								0		
		GPIO0_89	7	IO								0		

Copyright © 2023 Texas Instruments Incorporated

Table 5-1. Pin Attributes (continued)

BALL NUMBER [1]	BALL NAME [2]	SIGNAL NAME [3]	MUXMODE [4]	TYPE [5]	BALL RESET STATE [6]	BALL RESET REL. MUXMODE [7]	I/O VOLTAGE VALUE [8]	POWER [9]	HYS [10]	BUFFER TYPE [11]	PULL UP/ DOWN TYPE [12]	DSIS [13]	RXACTIVE / TXDISABLE [14]	IO Daisy Chain [15]
AH19	PRG1_PRU1_GPO14	PRG1_PRU1_GPO14	0	IO	OFF	7	1.8 V/3.3 V	VDDSHV4	Yes	LVCMOS	PU/PD	0	0/1	Yes
		PRG1_PRU1_GPI14	1	I								0		
		PRG1_RGMII2_TD2	2	O										
		PRG1_PWM1_A1	3	IO								0		
		PRG1_PRU1_GPO13	5	IO								0		
		GPIO0_90	7	IO								0		
AG19	PRG1_PRU1_GPO15	PRG1_PRU1_GPO15	0	IO	OFF	7	1.8 V/3.3 V	VDDSHV4	Yes	LVCMOS	PU/PD	0	0/1	Yes
		PRG1_PRU1_GPI15	1	I								0		
		PRG1_RGMII2_TD3	2	O										
		PRG1_PWM1_B1	3	IO								1		
		PRG1_PRU1_GPO14	5	IO								0		
		GPIO0_91	7	IO								0		
AE19	PRG1_PRU1_GPO16	PRG1_PRU1_GPO16	0	IO	OFF	7	1.8 V/3.3 V	VDDSHV4	Yes	LVCMOS	PU/PD	0	0/1	Yes
		PRG1_PRU1_GPI16	1	I								0		
		PRG1_RGMII2_TXC	2	IO								0		
		PRG1_PWM1_A2	3	IO								0		
		GPIO0_92	7	IO								0		
AE23	PRG1_PRU1_GPO17	PRG1_PRU1_GPO17	0	IO	OFF	7	1.8 V/3.3 V	VDDSHV4	Yes	LVCMOS	PU/PD	0	0/1	Yes
		PRG1_PRU1_GPI17	1	I								0		
		PRG1_IEP1_EDC_SYNC_OUT1	2	O										
		PRG1_PWM1_B2	3	IO								1		
		SPI2_CLK	4	IO								0		
		PRG1_ECAP0_SYNC_OUT	5	O										
		UART1_RXD	6	I								1		
		GPIO0_93	7	IO								0		
AD22	PRG1_PRU1_GPO18	PRG1_PRU1_GPO18	0	IO	OFF	7	1.8 V/3.3 V	VDDSHV4	Yes	LVCMOS	PU/PD	0	0/1	Yes
		PRG1_PRU1_GPI18	1	I								0		
		PRG1_IEP1_EDC_LATCH_IN0	2	I								0		
		PRG1_PWM1_TZ_IN	3	I								0		
		SPI2_D0	4	IO								0		
		PRG1_ECAP0_SYNC_IN	5	I								0		
		UART1_CTSn	6	I								1		
		GPIO0_94	7	IO								0		

Copyright © 2023 Texas Instruments Incorporated

Table 5-1. Pin Attributes (continued)

BALL NUMBER [1]	BALL NAME [2]	SIGNAL NAME [3]	MUXMODE [4]	TYPE [5]	BALL RESET STATE [6]	BALL RESET REL. MUXMODE [7]	I/O VOLTAGE VALUE [8]	POWER [9]	HYS [10]	BUFFER TYPE [11]	PULL UP/ DOWN TYPE [12]	DSIS [13]	RXACTIVE / TXDISABLE [14]	IO Daisy Chain [15]
AC21	PRG1_PRU1_GPO19	PRG1_PRU1_GPO19	0	IO	OFF	7	1.8 V/3.3 V	VDDSHV4	Yes	LVCMOS	PU/PD	0	0/1	Yes
		PRG1_PRU1_GPI19	1	I								0		
		PRG1_IEP1_EDC_SYNC_OUT0	2	O										
		PRG1_PWM1_TZ_OUT	3	O										
		SPI2_D1	4	IO								0		
		PRG1_ECAP0_IN_APWM_OUT	5	IO								0		
		UART1_RTSn	6	O										
		GPIO0_95	7	IO								0		
AF18	PRG2_PRU0_GPO0	PRG2_PRU0_GPO0	0	IO	OFF	7	1.8 V/3.3 V	VDDSHV5	Yes	LVCMOS	PU/PD	0	0/1	Yes
		PRG2_PRU0_GPI0	1	I								0		
		PRG2_RGMII1_RD0	2	I								0		
		GPMC0_A25	3	OZ										
		TRC_CLK	4	O										
		EHRPWM0_SYNCI	5	I								0		
		PRG2_PWM3_A0	6	IO								0		
		GPIO0_30	7	IO								0		
AE18	PRG2_PRU0_GPO1	PRG2_PRU0_GPO1	0	IO	OFF	7	1.8 V/3.3 V	VDDSHV5	Yes	LVCMOS	PU/PD	0	0/1	Yes
		PRG2_PRU0_GPI1	1	I								0		
		PRG2_RGMII1_RD1	2	I								0		
		GPMC0_A24	3	OZ										
		TRC_CTL	4	O										
		EHRPWM0_SYNCO	5	O										
		SYNC2_OUT	6	O										
		GPIO0_31	7	IO								0		
AH17	PRG2_PRU0_GPO2	PRG2_PRU0_GPO2	0	IO	OFF	7	1.8 V/3.3 V	VDDSHV5	Yes	LVCMOS	PU/PD	0	0/1	Yes
		PRG2_PRU0_GPI2	1	I								0		
		PRG2_RGMII1_RD2	2	I								0		
		GPMC0_A23	3	OZ										
		TRC_DATA0	4	O										
		EHRPWM_TZn_IN0	5	I								0		
		SYNC3_OUT	6	O										
		GPIO0_32	7	IO								0		

Copyright © 2023 Texas Instruments Incorporated

Table 5-1. Pin Attributes (continued)

BALL NUMBER [1]	BALL NAME [2]	SIGNAL NAME [3]	MUXMODE [4]	TYPE [5]	BALL RESET STATE [6]	BALL RESET REL. MUXMODE [7]	I/O VOLTAGE VALUE [8]	POWER [9]	HYS [10]	BUFFER TYPE [11]	PULL UP/ DOWN TYPE [12]	DSIS [13]	RXACTIVE / TXDISABLE [14]	IO Daisy Chain [15]
AG18	PRG2_PRU0_GPO3	PRG2_PRU0_GPO3	0	IO	OFF	7	1.8 V/3.3 V	VDDSHV5	Yes	LVCMOS	PU/PD	0	0/1	Yes
		PRG2_PRU0_GPI3	1	I								0		
		PRG2_RGMII1_RD3	2	I								0		
		GPMC0_A22	3	OZ										
		TRC_DATA1	4	O										
		EHRPWM0_A	5	IO								0		
		PRG2_PWM3_B0	6	IO								1		
		GPIO0_33	7	IO								0		
AG17	PRG2_PRU0_GPO4	PRG2_PRU0_GPO4	0	IO	OFF	7	1.8 V/3.3 V	VDDSHV5	Yes	LVCMOS	PU/PD	0	0/1	Yes
		PRG2_PRU0_GPI4	1	I								0		
		PRG2_RGMII1_RX_CTL	2	I								0		
		GPMC0_A21	3	OZ										
		TRC_DATA2	4	O										
		EHRPWM0_B	5	IO								0		
		PRG2_PWM0_A0	6	IO								0		
		GPIO0_34	7	IO								0		
AF17	PRG2_PRU0_GPO5	PRG2_PRU0_GPO5	0	IO	OFF	7	1.8 V/3.3 V	VDDSHV5	Yes	LVCMOS	PU/PD	0	0/1	Yes
		PRG2_PRU0_GPI5	1	I								0		
		PRG2_RGMII1_RXC	2	I								0		
		GPMC0_A20	3	OZ										
		TRC_DATA3	4	O										
		EHRPWM1_A	5	IO								0		
		PRG2_PWM3_A1	6	IO								0		
		GPIO0_35	7	IO								0		
AE17	PRG2_PRU0_GPO6	PRG2_PRU0_GPO6	0	IO	OFF	7	1.8 V/3.3 V	VDDSHV5	Yes	LVCMOS	PU/PD	0	0/1	Yes
		PRG2_PRU0_GPI6	1	I								0		
		PRG2_RGMII1_TX_CTL	2	O										
		GPMC0_A19	3	OZ										
		TRC_DATA4	4	O										
		EHRPWM1_B	5	IO								0		
		PRG2_PWM3_B1	6	IO								1		
		GPIO0_36	7	IO								0		

Copyright © 2023 Texas Instruments Incorporated

Table 5-1. Pin Attributes (continued)

BALL NUMBER [1]	BALL NAME [2]	SIGNAL NAME [3]	MUXMODE [4]	TYPE [5]	BALL RESET STATE [6]	BALL RESET REL. MUXMODE [7]	I/O VOLTAGE VALUE [8]	POWER [9]	HYS [10]	BUFFER TYPE [11]	PULL UP/ DOWN TYPE [12]	DSIS [13]	RXACTIVE / TXDISABLE [14]	IO Daisy Chain [15]
AC19	PRG2_PRU0_GPO7	PRG2_PRU0_GPO7	0	IO	OFF	7	1.8 V/3.3 V	VDDSHV5	Yes	LVCMOS	PU/PD	0	0/1	Yes
		PRG2_PRU0_GPI7	1	I								0		
		PRG2_MDIO0_MDIO	2	IO								0		
		GPMC0_A18	3	OZ										
		TRC_DATA5	4	O										
		EHRPWM_TZn_IN1	5	I								0		
		EHRPWM_SOCA	6	O										
		GPIO0_37	7	IO								0		
AH16	PRG2_PRU0_GPO8	PRG2_PRU0_GPO8	0	IO	OFF	7	1.8 V/3.3 V	VDDSHV5	Yes	LVCMOS	PU/PD	0	0/1	Yes
		PRG2_PRU0_GPI8	1	I								0		
		PRG2_RGMII1_TD0	2	O										
		GPMC0_A17	3	OZ										
		TRC_DATA6	4	O										
		EHRPWM2_A	5	IO								0		
		PRG2_PWM0_B0	6	IO								1		
		GPIO0_38	7	IO								0		
AG16	PRG2_PRU0_GPO9	PRG2_PRU0_GPO9	0	IO	OFF	7	1.8 V/3.3 V	VDDSHV5	Yes	LVCMOS	PU/PD	0	0/1	Yes
		PRG2_PRU0_GPI9	1	I								0		
		PRG2_RGMII1_TD1	2	O										
		GPMC0_A16	3	OZ										
		TRC_DATA7	4	O										
		EHRPWM2_B	5	IO								0		
		GPIO0_39	7	IO								0		
AF16	PRG2_PRU0_GPO10	PRG2_PRU0_GPO10	0	IO	OFF	7	1.8 V/3.3 V	VDDSHV5	Yes	LVCMOS	PU/PD	0	0/1	Yes
		PRG2_PRU0_GPI10	1	I								0		
		PRG2_RGMII1_TD2	2	O										
		GPMC0_A15	3	OZ										
		TRC_DATA8	4	O										
		EHRPWM_TZn_IN2	5	I								0		
		EHRPWM_SOCB	6	O										
		GPIO0_40	7	IO								0		

Copyright © 2023 Texas Instruments Incorporated

Table 5-1. Pin Attributes (continued)

BALL NUMBER [1]	BALL NAME [2]	SIGNAL NAME [3]	MUXMODE [4]	TYPE [5]	BALL RESET STATE [6]	BALL RESET REL. MUXMODE [7]	I/O VOLTAGE VALUE [8]	POWER [9]	HYS [10]	BUFFER TYPE [11]	PULL UP/ DOWN TYPE [12]	DSIS [13]	RXACTIVE / TXDISABLE [14]	IO Daisy Chain [15]
AE16	PRG2_PRU0_GPO11	PRG2_PRU0_GPO11	0	IO	OFF	7	1.8 V/3.3 V	VDDSHV5	Yes	LVCMOS	PU/PD	0	0/1	Yes
		PRG2_PRU0_GPI11	1	I								0		
		PRG2_RGMII1_TD3	2	O										
		GPMC0_A14	3	OZ										
		TRC_DATA9	4	O										
		PRG2_ECAP0_IN_APWM_OUT	6	IO								0		
		GPIO0_41	7	IO								0		
AD16	PRG2_PRU0_GPO16	PRG2_PRU0_GPO16	0	IO	OFF	7	1.8 V/3.3 V	VDDSHV5	Yes	LVCMOS	PU/PD	0	0/1	Yes
		PRG2_PRU0_GPI16	1	I								0		
		PRG2_RGMII1_TXC	2	IO								0		
		GPMC0_A13	3	OZ										
		TRC_DATA10	4	O										
		PRG2_PWM0_A1	6	IO								0		
		GPIO0_42	7	IO								0		
AH15	PRG2_PRU1_GPO0	PRG2_PRU1_GPO0	0	IO	OFF	7	1.8 V/3.3 V	VDDSHV5	Yes	LVCMOS	PU/PD	0	0/1	Yes
		PRG2_PRU1_GPI0	1	I								0		
		PRG2_RGMII2_RD0	2	I								0		
		GPMC0_A12	3	OZ										
		TRC_DATA11	4	O										
		EHRPWM3_A	5	IO								0		
		PRG2_PWM3_A2	6	IO								0		
		GPIO0_43	7	IO								0		
AC16	PRG2_PRU1_GPO1	PRG2_PRU1_GPO1	0	IO	OFF	7	1.8 V/3.3 V	VDDSHV5	Yes	LVCMOS	PU/PD	0	0/1	Yes
		PRG2_PRU1_GPI1	1	I								0		
		PRG2_RGMII2_RD1	2	I								0		
		GPMC0_A11	3	OZ										
		TRC_DATA12	4	O										
		EHRPWM3_B	5	IO								0		
		PRG2_PWM3_B2	6	IO								1		
		GPIO0_44	7	IO								0		

Copyright © 2023 Texas Instruments Incorporated

Table 5-1. Pin Attributes (continued)

BALL NUMBER [1]	BALL NAME [2]	SIGNAL NAME [3]	MUXMODE [4]	TYPE [5]	BALL RESET STATE [6]	BALL RESET REL. MUXMODE [7]	I/O VOLTAGE VALUE [8]	POWER [9]	HYS [10]	BUFFER TYPE [11]	PULL UP/ DOWN TYPE [12]	DSIS [13]	RXACTIVE / TXDISABLE [14]	IO Daisy Chain [15]
AD17	PRG2_PRU1_GPO2	PRG2_PRU1_GPO2	0	IO	OFF	7	1.8 V/3.3 V	VDDSHV5	Yes	LVCMOS	PU/PD	0	0/1	Yes
		PRG2_PRU1_GPI2	1	I								0		
		PRG2_RGMII2_RD2	2	I								0		
		GPMC0_A10	3	OZ										
		TRC_DATA13	4	O										
		EHRPWM3_SYNCI	5	I								0		
		PRG2_PWM0_B1	6	IO								1		
		GPIO0_45	7	IO								0		
AH14	PRG2_PRU1_GPO3	PRG2_PRU1_GPO3	0	IO	OFF	7	1.8 V/3.3 V	VDDSHV5	Yes	LVCMOS	PU/PD	0	0/1	Yes
		PRG2_PRU1_GPI3	1	I								0		
		PRG2_RGMII2_RD3	2	I								0		
		GPMC0_A9	3	OZ										
		TRC_DATA14	4	O										
		EHRPWM3_SYNCO	5	O										
		GPIO0_46	7	IO								0		
AG14	PRG2_PRU1_GPO4	PRG2_PRU1_GPO4	0	IO	OFF	7	1.8 V/3.3 V	VDDSHV5	Yes	LVCMOS	PU/PD	0	0/1	Yes
		PRG2_PRU1_GPI4	1	I								0		
		PRG2_RGMII2_RX_CTL	2	I								0		
		GPMC0_A8	3	OZ										
		TRC_DATA15	4	O										
		EHRPWM_TZn_IN3	5	I								0		
		PRG2_ECAP0_SYNC_OUT	6	O										
		GPIO0_47	7	IO								0		
AG15	PRG2_PRU1_GPO5	PRG2_PRU1_GPO5	0	IO	OFF	7	1.8 V/3.3 V	VDDSHV5	Yes	LVCMOS	PU/PD	0	0/1	Yes
		PRG2_PRU1_GPI5	1	I								0		
		PRG2_RGMII2_RXC	2	I								0		
		GPMC0_A7	3	OZ										
		TRC_DATA16	4	O										
		EHRPWM4_A	5	IO								0		
		GPIO0_48	7	IO								0		
AC17	PRG2_PRU1_GPO6	PRG2_PRU1_GPO6	0	IO	OFF	7	1.8 V/3.3 V	VDDSHV5	Yes	LVCMOS	PU/PD	0	0/1	Yes
		PRG2_PRU1_GPI6	1	I								0		
		PRG2_RGMII2_TX_CTL	2	O										
		GPMC0_A6	3	OZ										
		TRC_DATA17	4	O										
		EHRPWM4_B	5	IO								0		
		GPIO0_49	7	IO								0		

Copyright © 2023 Texas Instruments Incorporated

Table 5-1. Pin Attributes (continued)

BALL NUMBER [1]	BALL NAME [2]	SIGNAL NAME [3]	MUXMODE [4]	TYPE [5]	BALL RESET STATE [6]	BALL RESET REL. MUXMODE [7]	I/O VOLTAGE VALUE [8]	POWER [9]	HYS [10]	BUFFER TYPE [11]	PULL UP/ DOWN TYPE [12]	DSIS [13]	RXACTIVE / TXDISABLE [14]	IO Daisy Chain [15]
AE15	PRG2_PRU1_GPO7	PRG2_PRU1_GPO7	0	IO	OFF	7	1.8 V/3.3 V	VDDSHV5	Yes	LVCMOS	PU/PD	0	0/1	Yes
		PRG2_PRU1_GPI7	1	I								0		
		PRG2_MDIO0_MDC	2	O										
		GPMC0_A5	3	OZ										
		TRC_DATA18	4	O										
		EHRPWM_TZn_IN4	5	I								0		
		PRG2_PWM3_TZ_IN	6	I								0		
		GPIO0_50	7	IO								0		
AD15	PRG2_PRU1_GPO8	PRG2_PRU1_GPO8	0	IO	OFF	7	1.8 V/3.3 V	VDDSHV5	Yes	LVCMOS	PU/PD	0	0/1	Yes
		PRG2_PRU1_GPI8	1	I								0		
		PRG2_RGMII2_TD0	2	O										
		GPMC0_A4	3	OZ										
		TRC_DATA19	4	O										
		EHRPWM5_A	5	IO								0		
		PRG2_PWM0_A2	6	IO								0		
		GPIO0_51	7	IO								0		
AF14	PRG2_PRU1_GPO9	PRG2_PRU1_GPO9	0	IO	OFF	7	1.8 V/3.3 V	VDDSHV5	Yes	LVCMOS	PU/PD	0	0/1	Yes
		PRG2_PRU1_GPI9	1	I								0		
		PRG2_RGMII2_TD1	2	O										
		GPMC0_A3	3	OZ										
		TRC_DATA20	4	O										
		EHRPWM5_B	5	IO								0		
		PRG2_PWM3_TZ_OUT	6	O										
		GPIO0_52	7	IO								0		
AC15	PRG2_PRU1_GPO10	PRG2_PRU1_GPO10	0	IO	OFF	7	1.8 V/3.3 V	VDDSHV5	Yes	LVCMOS	PU/PD	0	0/1	Yes
		PRG2_PRU1_GPI10	1	I								0		
		PRG2_RGMII2_TD2	2	O										
		GPMC0_A2	3	OZ										
		TRC_DATA21	4	O										
		EHRPWM_TZn_IN5	5	I								0		
		PRG2_PWM0_B2	6	IO								1		
		GPIO0_53	7	IO								0		

Copyright © 2023 Texas Instruments Incorporated

Table 5-1. Pin Attributes (continued)

BALL NUMBER [1]	BALL NAME [2]	SIGNAL NAME [3]	MUXMODE [4]	TYPE [5]	BALL RESET STATE [6]	BALL RESET REL. MUXMODE [7]	I/O VOLTAGE VALUE [8]	POWER [9]	HYS [10]	BUFFER TYPE [11]	PULL UP/ DOWN TYPE [12]	DSIS [13]	RXACTIVE / TXDISABLE [14]	IO Daisy Chain [15]
AD14	PRG2_PRU1_GPO11	PRG2_PRU1_GPO11	0	IO	OFF	7	1.8 V/3.3 V	VDDSHV5	Yes	LVCMOS	PU/PD	0	0/1	Yes
		PRG2_PRU1_GPI11	1	I								0		
		PRG2_RGMII2_TD3	2	O										
		GPMC0_A1	3	OZ										
		TRC_DATA22	4	O										
		PRG2_ECAP0_SYNC_IN	6	I								0		
		GPIO0_54	7	IO								0		
AE14	PRG2_PRU1_GPO16	PRG2_PRU1_GPO16	0	IO	OFF	7	1.8 V/3.3 V	VDDSHV5	Yes	LVCMOS	PU/PD	0	0/1	Yes
		PRG2_PRU1_GPI16	1	I								0		
		PRG2_RGMII2_TXC	2	IO								0		
		GPMC0_A0	3	OZ										
		TRC_DATA23	4	O										
		PRG2_PWM1_TZ_OUT	6	O										
		GPIO0_55	7	IO								0		
AF9	REFCLK0N	REFCLK0N		O	OFF		1.8 V	VDDA_1P8_SERDES0		LJCB CLK				No
AF10	REFCLK0P	REFCLK0P		O	OFF		1.8 V	VDDA_1P8_SERDES0		LJCB CLK				No
AE8	REFCLK1N	REFCLK1N		O	OFF		1.8 V	VDDA_1P8_SERDES0		LJCB CLK				No
AE9	REFCLK1P	REFCLK1P		O	OFF		1.8 V	VDDA_1P8_SERDES0		LJCB CLK				No
D19	RESETSTATz	RESETSTATz	0	O	OFF	0	1.8 V/3.3 V	VDDSHV0	Yes	LVCMOS	PU/PD		0/0	Yes
F17	RESETz	RESETz	0	I	PU	0	1.8 V/3.3 V	VDDSHV0	Yes	LVCMOS	PU/PD		1/1	Yes
AG5	SERDES0_REFCLKN	SERDES0_REFCLKN		I	OFF	0	1.8 V	VDDA_1P8_SERDES0		SERDES0				No
AG6	SERDES0_REFCLKP	SERDES0_REFCLKP		I	OFF	0	1.8 V	VDDA_1P8_SERDES0		SERDES0				No
AC9	SERDES0_REFRES	SERDES0_REFRES		A		0	1.8 V	VDDA_1P8_SERDES0		SERDES0				No
AH3	SERDES0_RXN	SERDES0_RXN		I	OFF	0	1.8 V	VDDA_1P8_SERDES0		SERDES0				No
AG2	SERDES0_RXP	SERDES0_RXP		I	OFF	0	1.8 V	VDDA_1P8_SERDES0		SERDES0				No
AH4	SERDES0_TXN	SERDES0_TXN		O	OFF	0	1.8 V	VDDA_1P8_SERDES0		SERDES0				No
AG3	SERDES0_TXP	SERDES0_TXP		O	OFF	0	1.8 V	VDDA_1P8_SERDES0		SERDES0				No
AH6	SERDES1_REFCLKN	SERDES1_REFCLKN		I	OFF	0	1.8 V	VDDA_1P8_SERDES0		SERDES1				No
AH7	SERDES1_REFCLKP	SERDES1_REFCLKP		I	OFF	0	1.8 V	VDDA_1P8_SERDES0		SERDES1				No

Copyright © 2023 Texas Instruments Incorporated

Table 5-1. Pin Attributes (continued)

BALL NUMBER [1]	BALL NAME [2]	SIGNAL NAME [3]	MUXMODE [4]	TYPE [5]	BALL RESET STATE [6]	BALL RESET REL. MUXMODE [7]	I/O VOLTAGE VALUE [8]	POWER [9]	HYS [10]	BUFFER TYPE [11]	PULL UP/ DOWN TYPE [12]	DSIS [13]	RXACTIVE / TXDISABLE [14]	IO Daisy Chain [15]
AC14	SERDES1_REFRES	SERDES1_REFRES		A		0	1.8 V	VDDA_1P8_SERDES0		SERDES1				No
AG9	SERDES1_RXN	SERDES1_RXN		I	OFF	0	1.8 V	VDDA_1P8_SERDES0		SERDES1				No
AH10	SERDES1_RXP	SERDES1_RXP		I	OFF	0	1.8 V	VDDA_1P8_SERDES0		SERDES1				No
AH9	SERDES1_TXN	SERDES1_TXN		O	OFF	0	1.8 V	VDDA_1P8_SERDES0		SERDES1				No
AG8	SERDES1_TXP	SERDES1_TXP		O	OFF	0	1.8 V	VDDA_1P8_SERDES0		SERDES1				No
E20	SOC_SAFETY_ERRORn	SOC_SAFETY_ERRORn	0	IO	PD	0	1.8 V/3.3 V	VDDSHV0	Yes	LVCMOS	PU/PD		1/0	Yes
AH13	SPI0_CLK	SPI0_CLK	0	IO	OFF	7	1.8 V/3.3 V	VDDSHV1	Yes	LVCMOS	PU/PD	0	0/1	Yes
		GPIO1_17	7	IO								0		
AH12	SPI1_CLK	SPI1_CLK	0	IO	OFF	7	1.8 V/3.3 V	VDDSHV1	Yes	LVCMOS	PU/PD	0	0/1	Yes
		PRG2_IEP0_EDC_SYNC_OUT0	3	O										
		PRG2_UART0_RTSn	4	O										
		GPIO1_22	7	IO								0		
AG13	SPI0_CS0	SPI0_CS0	0	IO	OFF	7	1.8 V/3.3 V	VDDSHV1	Yes	LVCMOS	PU/PD	1	0/1	Yes
		GPIO1_15	7	IO								0		
AF13	SPI0_CS1	SPI0_CS1	0	IO	OFF	7	1.8 V/3.3 V	VDDSHV1	Yes	LVCMOS	PU/PD	1	0/1	Yes
		CPTS0_TS_COMP	1	O										
		I2C3_SCL	2	IOD								1		
		PRG1_IEP0_EDIO_OUTVALID	6	O										
		GPIO1_16	7	IO								0		
AE13	SPI0_D0	SPI0_D0	0	IO	OFF	7	1.8 V/3.3 V	VDDSHV1	Yes	LVCMOS	PU/PD	0	0/1	Yes
		GPIO1_18	7	IO								0		
AD13	SPI0_D1	SPI0_D1	0	IO	OFF	7	1.8 V/3.3 V	VDDSHV1	Yes	LVCMOS	PU/PD	0	0/1	Yes
		GPIO1_19	7	IO								0		
AD12	SPI1_CS0	SPI1_CS0	0	IO	OFF	7	1.8 V/3.3 V	VDDSHV1	Yes	LVCMOS	PU/PD	1	0/1	Yes
		PRG2_IEP0_EDC_LATCH_IN0	3	I								0		
		PRG2_UART0_CTSn	4	I								1		
		PRG0_IEP0_EDIO_OUTVALID	6	O										
		GPIO1_20	7	IO								0		
AG12	SPI1_CS1	SPI1_CS1	0	IO	OFF	7	1.8 V/3.3 V	VDDSHV1	Yes	LVCMOS	PU/PD	1	0/1	Yes
		CPTS0_TS_SYNC	1	O										
		I2C3_SDA	2	IOD								1		
		GPIO1_21	7	IO								0		

Copyright © 2023 Texas Instruments Incorporated

Table 5-1. Pin Attributes (continued)

BALL NUMBER [1]	BALL NAME [2]	SIGNAL NAME [3]	MUXMODE [4]	TYPE [5]	BALL RESET STATE [6]	BALL RESET REL. MUXMODE [7]	I/O VOLTAGE VALUE [8]	POWER [9]	HYS [10]	BUFFER TYPE [11]	PULL UP/ DOWN TYPE [12]	DSIS [13]	RXACTIVE / TXDISABLE [14]	IO Daisy Chain [15]
AE12	SPI1_D0	SPI1_D0	0	IO	OFF	7	1.8 V/3.3 V	VDDSHV1	Yes	LVCMOS	PU/PD	0	0/1	Yes
		PRG2_IEP0_EDC_LATCH_IN1	3	I								0		
		PRG2_UART0_RXD	4	I								1		
		GPIO1_23	7	IO								0		
AF12	SPI1_D1	SPI1_D1	0	IO	OFF	7	1.8 V/3.3 V	VDDSHV1	Yes	LVCMOS	PU/PD	0	0/1	Yes
		PRG2_IEP0_EDC_SYNC_OUT1	3	O										
		PRG2_UART0_TXD	4	O										
		GPIO1_24	7	IO								0		
AA4	TCK	TCK	0	I	PU	0	1.8 V/3.3 V	VDDSHV0_WKUP	Yes	LVCMOS	PU/PD		1/1	Yes
C20	TDI	TDI	0	I	PU	0	1.8 V/3.3 V	VDDSHV0	Yes	LVCMOS	PU/PD		1/1	Yes
A20	TDO	TDO	0	OZ	PU	0	1.8 V/3.3 V	VDDSHV0		LVCMOS	PU/PD		0/0	Yes
W6	TEMP_DIODE_P	TEMP_DIODE_P		A			1.8 V			Power				No
B22	TIMER_IO0	TIMER_IO0	0	IO	OFF	7	1.8 V/3.3 V	VDDSHV0	Yes	LVCMOS	PU/PD	0	0/1	Yes
		SYSCLKOUT0	2	O										
		GPIO1_88	7	IO								0		
C23	TIMER_IO1	TIMER_IO1	0	IO	OFF	7	1.8 V/3.3 V	VDDSHV0	Yes	LVCMOS	PU/PD	0	0/1	Yes
		OBSCLK0	2	O										
		GPIO1_89	7	IO								0		
A21	TMS	TMS	0	I	PU	0	1.8 V/3.3 V	VDDSHV0	Yes	LVCMOS	PU/PD		1/1	Yes
AA3	TRSTn	TRSTn	0	I	PD	0	1.8 V/3.3 V	VDDSHV0_WKUP	Yes	LVCMOS	PU/PD		1/1	Yes
AG11	UART0_CTSn	UART0_CTSn	0	I	OFF	7	1.8 V/3.3 V	VDDSHV1	Yes	LVCMOS	PU/PD	1	0/1	Yes
		TIMER_IO4	1	IO								0		
		SPI0_CS2	2	IO								1		
		GPIO1_27	7	IO								0		
AD11	UART0_RTSn	UART0_RTSn	0	O	OFF	7	1.8 V/3.3 V	VDDSHV1	Yes	LVCMOS	PU/PD		0/1	Yes
		TIMER_IO5	1	IO								0		
		SPI0_CS3	2	IO								1		
		GPIO1_28	7	IO								0		
AF11	UART0_RXD	UART0_RXD	0	I	OFF	7	1.8 V/3.3 V	VDDSHV1	Yes	LVCMOS	PU/PD	1	0/1	Yes
		GPIO1_25	7	IO								0		
AE11	UART0_TXD	UART0_TXD	0	O	OFF	7	1.8 V/3.3 V	VDDSHV1	Yes	LVCMOS	PU/PD		0/1	Yes
		GPIO1_26	7	IO								0		
AE2	USB0_DM	USB0_DM		IO	OFF		3.3 V	VDDA_3P3_USB		USBHS				No
AF1	USB0_DP	USB0_DP		IO	OFF		3.3 V	VDDA_3P3_USB		USBHS				No

Copyright © 2023 Texas Instruments Incorporated

Table 5-1. Pin Attributes (continued)

BALL NUMBER [1]	BALL NAME [2]	SIGNAL NAME [3]	MUXMODE [4]	TYPE [5]	BALL RESET STATE [6]	BALL RESET REL. MUXMODE [7]	I/O VOLTAGE VALUE [8]	POWER [9]	HYS [10]	BUFFER TYPE [11]	PULL UP/ DOWN TYPE [12]	DSIS [13]	RXACTIVE / TXDISABLE [14]	IO Daisy Chain [15]
AD9	USB0_DRVVBUS	USB0_DRVVBUS	0	O	PD	0	1.8 V/3.3 V	VDDSHV8	Yes	LVCMOS	PU/PD		0/0	Yes
		GPIO1_71	7	IO								0		
AF7	USB0_ID	USB0_ID		A			3.3 V	VDDA_3P3_USB		USBHS				No
AE7	USB0_VBUS	USB0_VBUS		A				VDDA_3P3_USB		USBHS				No
AD2	USB1_DM	USB1_DM		IO	OFF		3.3 V	VDDA_3P3_USB		USBHS				No
AE1	USB1_DP	USB1_DP		IO	OFF		3.3 V	VDDA_3P3_USB		USBHS				No
AC8	USB1_DRVVBUS	USB1_DRVVBUS	0	O	PD	0	1.8 V/3.3 V	VDDSHV8	Yes	LVCMOS	PU/PD		0/0	Yes
		GPIO1_72	7	IO								0		
AF5	USB1_ID	USB1_ID		A			3.3 V	VDDA_3P3_USB		USBHS				No
AF6	USB1_VBUS	USB1_VBUS		A				VDDA_3P3_USB		USBHS				No
AB6	VDDA_1P8_MON_WKUP	VDDA_1P8_MON0		A			1.8 V			Power				No
G17	VDDA_1P8_SDIO	VDDA_1P8_SDIO		PWR										
L20, M21	VDDA_1P8_CSI0	VDDA_1P8_CSI0		PWR										
AC6	VDDA_1P8_MON0	VDDA_1P8_MON0		A			1.8 V			Power				No
L22	VDDA_1P8_OLDI0	VDDA_1P8_OLDI0		PWR										
AA14, AB13, AB15	VDDA_1P8_SERDES0	VDDA_1P8_SERDES0		PWR										
AB9	VDDA_3P3_IOLDO_WKUP	VDDA_3P3_IOLDO_WKUP		PWR										
U6	VDDA_3P3_MON_WKUP	VDDA_3P3_MON0		A			3.3 V			Power				No
H17	VDDA_3P3_SDIO	VDDA_3P3_SDIO		PWR										
AC12	VDDA_3P3_USB	VDDA_3P3_USB		PWR										
G18	VDDA_3P3_IOLDO0	VDDA_3P3_IOLDO0		PWR										
AA21	VDDA_3P3_IOLDO1	VDDA_3P3_IOLDO1		PWR										
AC10	VDDA_3P3_MON0	VDDA_3P3_MON0		A			3.3 V			Power				No
M7, M9	VDDA_ADC_MCU	VDDA_ADC_MCU		PWR										
AB8	VDDA_LDO_WKUP	VDDA_LDO_WKUP		PWR										
U12	VDDA_MCU	VDDA_MCU		PWR										
H15	VDDA_PLL0_DDR	VDDA_PLL0_DDR		PWR										
H11	VDDA_PLL1_DDR	VDDA_PLL1_DDR		PWR										
Y17	VDDA_PLL_CORE	VDDA_PLL_CORE		PWR										
L21	VDDA_PLL_DSS	VDDA_PLL_DSS		PWR										
L12	VDDA_PLL_MPU0	VDDA_PLL_MPU0		PWR										
K15	VDDA_PLL_MPU1	VDDA_PLL_MPU1		PWR										
AB7	VDDA_PLL_PER0	VDDA_PLL_PER0		PWR										

Copyright © 2023 Texas Instruments Incorporated

Table 5-1. Pin Attributes (continued)

BALL NUMBER [1]	BALL NAME [2]	SIGNAL NAME [3]	MUXMODE [4]	TYPE [5]	BALL RESET STATE [6]	BALL RESET REL. MUXMODE [7]	I/O VOLTAGE VALUE [8]	POWER [9]	HYS [10]	BUFFER TYPE [11]	PULL UP/ DOWN TYPE [12]	DSIS [13]	RXACTIVE / TXDISABLE [14]	IO Daisy Chain [15]
Y9	VDDA_POR_WKUP	VDDA_POR_WKUP		PWR										
M19	VDDA_SRAM_CORE0	VDDA_SRAM_CORE0		PWR										
V16	VDDA_SRAM_CORE1	VDDA_SRAM_CORE1		PWR										
K7	VDDA_SRAM_MPU0	VDDA_SRAM_MPU0		PWR										
L18	VDDA_SRAM_MPU1	VDDA_SRAM_MPU1		PWR										
AC11	VDDA_VSYS_MON	VDDA_VSYS_MON		A			0.5 V?			Power				No
AA9	VDDA_WKUP	VDDA_WKUP		PWR										
G12	VDDS0	VDDS0		PWR										
V8	VDDS0_WKUP	VDDS0_WKUP		PWR										
AA16	VDDS1	VDDS1		PWR										
T9	VDDS1_WKUP	VDDS1_WKUP		PWR										
P20	VDDS2	VDDS2		PWR										
N8	VDDS2_WKUP	VDDS2_WKUP		PWR										
T20	VDDS3	VDDS3		PWR										
Y20	VDDS4	VDDS4		PWR										
AC18	VDDS5	VDDS5		PWR										
F20	VDDS6	VDDS6		PWR										
K20	VDDS7	VDDS7		PWR										
AA10	VDDS8	VDDS8		PWR										
G15, H16	VDDSHV0	VDDSHV0		PWR										
U8, V7, W8, Y7	VDDSHV0_WKUP	VDDSHV0_WKUP		PWR										
AA18, AB17	VDDSHV1	VDDSHV1		PWR										
R6, R8, T7	VDDSHV1_WKUP	VDDSHV1_WKUP		PWR										
N20, N22, P21, R20, R22	VDDSHV2	VDDSHV2		PWR										
N6, P7, P9	VDDSHV2_WKUP	VDDSHV2_WKUP		PWR										
T21, U20, U22, V21, V23	VDDSHV3	VDDSHV3		PWR										
AA22, W20, W22, Y21, Y23	VDDSHV4	VDDSHV4		PWR										
AA20, AB19, AB21, AB23	VDDSHV5	VDDSHV5		PWR										
G20, H19, H21	VDDSHV6	VDDSHV6		PWR										
J20, J22, K21	VDDSHV7	VDDSHV7		PWR										
AB11	VDDSHV8	VDDSHV8		PWR										
G10, G14, G8, H13, H7, H9	VDDS_DDR	VDDS_DDR		PWR										
J16	VDDS_OSC1	VDDS_OSC1		PWR										

Copyright © 2023 Texas Instruments Incorporated

Table 5-1. Pin Attributes (continued)

BALL NUMBER [1]	BALL NAME [2]	SIGNAL NAME [3]	MUXMODE [4]	TYPE [5]	BALL RESET STATE [6]	BALL RESET REL. MUXMODE [7]	I/O VOLTAGE VALUE [8]	POWER [9]	HYS [10]	BUFFER TYPE [11]	PULL UP/ DOWN TYPE [12]	DSIS [13]	RXACTIVE / TXDISABLE [14]	IO Daisy Chain [15]
AA12, J10, J12, J14, J19, J8, K13, L14, L19, M13, N14, P13, P15, P19, R14, R16, R18, T13, T15, T17, T19, U14, U16, U18, V13, V15, V19, W14, W18, Y11, Y13, Y15	VDD_CORE	VDD_CORE		PWR										
G22	VDD_DLL_MMC0	VDD_DLL_MMC0		PWR										
H23	VDD_DLL_MMC1	VDD_DLL_MMC1		PWR										
N10, P11, R10, R12, T11	VDD_MCU	VDD_MCU		PWR										
K11, K9, L10, L8, M11	VDD_MPU0	VDD_MPU0		PWR										
K16, K18, L17, M16, M18, N17	VDD_MPU1	VDD_MPU1		PWR										
V11, W10, W12	VDD_WKUP0	VDD_WKUP0		PWR										
M22	VDD_WKUP1	VDD_WKUP1		PWR										
F21	VPP_CORE	VPP_CORE		PWR	OFF		1.8 V			Power				No
T6	VPP_MCU	VPP_MCU		PWR	OFF		1.8 V			Power				No

Copyright © 2023 Texas Instruments Incorporated

Table 5-1. Pin Attributes (continued)

BALL NUMBER [1]	BALL NAME [2]	SIGNAL NAME [3]	MUXMODE [4]	TYPE [5]	BALL RESET STATE [6]	BALL RESET REL. MUXMODE [7]	I/O VOLTAGE VALUE [8]	POWER [9]	HYS [10]	BUFFER TYPE [11]	PULL UP/ DOWN TYPE [12]	DSIS [13]	RXACTIVE / TXDISABLE [14]	IO Daisy Chain [15]
A1, A2, A28, AA11, AA13, AA15, AA17, AA19, AA23, AA26, AA7, AB10, AB12, AB14, AB16, AB18, AB20, AB22, AD4, AE10, AE25, AE5, AF15, AF2, AF20, AF8, AG1, AG10, AG28, AG4, AG7, AH1, AH11, AH2, AH27, AH28, AH5, AH8, B12, B15, B20, B6, B9, D22, E26, E28, E4, F14, F19, F22, F25, F27, F3, G11, G13, G16, G2, G21, G23, G7, G9, H1, H10, H12, H14, H20, H22, H24, H26, H28, H6, H8, J11, J13, J15, J18, J21, J23, J25, J27, J7, J9, K1, K10, K12, K14, K17, K19, K22, K23, K6, K8, L11, L13, L16, L23, L24, L26, L28, L3, L7, L9, M10, M15, M17, M20, M8, N11, N13, N16, N19, N21, N7, N9, P10, P12, P14, P16, P18, P22, P6, P8, R11, R13, R15, R17, R19, R21, R7, R9, T10, T12, T14, T16, T18, T22, T26, T8, U11, U13, U15, U17, U19, U21, U3, U7, U9, V10, V12, V14, V18, V20, V22, V6, W11, W13, W15, W17, W19, W21, W23, W7, W9, Y12, Y14, Y16, Y18, Y22, Y6, Y8	VSS	VSS		GND										

Copyright © 2023 Texas Instruments Incorporated

Table 5-1. Pin Attributes (continued)

BALL NUMBER [1]	BALL NAME [2]	SIGNAL NAME [3]	MUXMODE [4]	TYPE [5]	BALL RESET STATE [6]	BALL RESET REL. MUXMODE [7]	I/O VOLTAGE VALUE [8]	POWER [9]	HYS [10]	BUFFER TYPE [11]	PULL UP/ DOWN TYPE [12]	DSIS [13]	RXACTIVE / TXDISABLE [14]	IO Daisy Chain [15]
AF4	WKUP_GPIO0_0	WKUP_GPIO0_0	0	IO	OFF	7	1.8 V/3.3 V	VDDSHV0_WKUP	Yes	LVCMOS	PU/PD	0	1/1	Yes
		MCU_SPI1_CLK	1	IO								0		
		WKUP_GPIO0_0	7	IO								0		
		MCU_BOOTMODE00	Bootstrap	I								0		
AF3	WKUP_GPIO0_1	WKUP_GPIO0_1	0	IO	OFF	7	1.8 V/3.3 V	VDDSHV0_WKUP	Yes	LVCMOS	PU/PD	0	1/1	Yes
		MCU_SPI1_D0	1	IO								0		
		WKUP_GPIO0_1	7	IO								0		
		MCU_BOOTMODE01	Bootstrap	I								0		
AE3	WKUP_GPIO0_2	WKUP_GPIO0_2	0	IO	OFF	7	1.8 V/3.3 V	VDDSHV0_WKUP	Yes	LVCMOS	PU/PD	0	1/1	Yes
		MCU_SPI1_D1	1	IO								0		
		WKUP_GPIO0_2	7	IO								0		
		MCU_BOOTMODE02	Bootstrap	I								0		
AD1	WKUP_GPIO0_3	WKUP_GPIO0_3	0	IO	OFF	7	1.8 V/3.3 V	VDDSHV0_WKUP	Yes	LVCMOS	PU/PD	0	1/1	Yes
		MCU_SPI1_CS0	1	IO								1		
		WKUP_GPIO0_3	7	IO								0		
		MCU_BOOTMODE03	Bootstrap	I								0		
AC3	WKUP_GPIO0_4	WKUP_GPIO0_4	0	IO	OFF	7	1.8 V/3.3 V	VDDSHV0_WKUP	Yes	LVCMOS	PU/PD	0	1/1	Yes
		MCU_MCAN1_TX	1	O										
		MCU_SPI0_CS3	2	IO								1		
		MCU_ADC_EXT_TRIGGER0	3	I								0		
		WKUP_GPIO0_4	7	IO								0		
		MCU_BOOTMODE04	Bootstrap	I								0		
AD3	WKUP_GPIO0_5	WKUP_GPIO0_5	0	IO	OFF	7	1.8 V/3.3 V	VDDSHV0_WKUP	Yes	LVCMOS	PU/PD	0	0/1	Yes
		MCU_MCAN1_RX	1	I								1		
		MCU_SPI1_CS3	2	IO								1		
		MCU_ADC_EXT_TRIGGER1	3	I								0		
		WKUP_GPIO0_5	7	IO								0		
AC2	WKUP_GPIO0_6	WKUP_GPIO0_6	0	IO	OFF	7	1.8 V/3.3 V	VDDSHV0_WKUP	Yes	LVCMOS	PU/PD	0	0/1	Yes
		WKUP_UART0_CTSn	1	I								1		
		MCU_CPTS0_HW1TSPUSH	2	I								0		
		WKUP_GPIO0_6	7	IO								0		
AC1	WKUP_GPIO0_7	WKUP_GPIO0_7	0	IO	OFF	7	1.8 V/3.3 V	VDDSHV0_WKUP	Yes	LVCMOS	PU/PD	0	0/1	Yes
		WKUP_UART0_RTSn	1	O										
		MCU_CPTS0_HW2TSPUSH	2	I								0		
		WKUP_GPIO0_7	7	IO								0		

Copyright © 2023 Texas Instruments Incorporated

Table 5-1. Pin Attributes (continued)

BALL NUMBER [1]	BALL NAME [2]	SIGNAL NAME [3]	MUXMODE [4]	TYPE [5]	BALL RESET STATE [6]	BALL RESET REL. MUXMODE [7]	I/O VOLTAGE VALUE [8]	POWER [9]	HYS [10]	BUFFER TYPE [11]	PULL UP/ DOWN TYPE [12]	DSIS [13]	RXACTIVE / TXDISABLE [14]	IO Daisy Chain [15]
AC5	WKUP_GPIO0_8	WKUP_GPIO0_8	0	IO	OFF	7	1.8 V/3.3 V	VDDSHV0_WKUP	Yes	LVCMOS	PU/PD	0	1/1	Yes
		MCU_CPTS0_TS_SYNC	2	O										
		WKUP_GPIO0_8	7	IO								0		
		MCU_BOOTMODE08	Bootstrap	I								0		
AB4	WKUP_GPIO0_9	WKUP_GPIO0_9	0	IO	OFF	7	1.8 V/3.3 V	VDDSHV0_WKUP	Yes	LVCMOS	PU/PD	0	1/1	Yes
		MCU_CPTS0_TS_COMP	2	O										
		WKUP_GPIO0_9	7	IO								0		
		MCU_BOOTMODE09	Bootstrap	I								0		
AB3	WKUP_GPIO0_10	WKUP_GPIO0_10	0	IO	OFF	7	1.8 V/3.3 V	VDDSHV0_WKUP	Yes	LVCMOS	PU/PD	0	0/1	Yes
		MCU_EXT_REFCLK0	1	I								0		
		MCU_CPTS0_RFT_CLK	4	I								0		
		MCU_SYSCLKOUT0	5	O										
		WKUP_GPIO0_10	7	IO								0		
AB2	WKUP_GPIO0_11	WKUP_GPIO0_11	0	IO	OFF	7	1.8 V/3.3 V	VDDSHV0_WKUP	Yes	LVCMOS	PU/PD	0	0/1	Yes
		MCU_OBSCLK0	1	O										
		MCU_TIMER_IO1	4	IO								0		
		MCU_CLKOUT0	6	O										
		WKUP_GPIO0_11	7	IO								0		
AC7	WKUP_I2C0_SCL	WKUP_I2C0_SCL	0	IOD	OFF	0	1.8 V/3.3 V	VDDSHV0_WKUP	Yes	I2C OPEN DRAIN		1	1/0	Yes
AD6	WKUP_I2C0_SDA	WKUP_I2C0_SDA	0	IOD	OFF	0	1.8 V/3.3 V	VDDSHV0_WKUP	Yes	I2C OPEN DRAIN		1	1/0	Yes
AE4	WKUP_LFOSC0_XI	WKUP_LFOSC0_XI		I	OFF		1.8 V	VDDA_WKUP		Analog				No
AC4	WKUP_LFOSC0_XO	WKUP_LFOSC0_XO		O	OFF		1.8 V	VDDA_WKUP		Analog				No
AD5	WKUP_OSC0_XI	WKUP_OSC0_XI		I	OFF		1.8 V	VDDA_WKUP		Analog				No
AE6	WKUP_OSC0_XO	WKUP_OSC0_XO		O	OFF		1.8 V	VDDA_WKUP		Analog				No
AB1	WKUP_UART0_RXD	WKUP_UART0_RXD	0	I	OFF	7	1.8 V/3.3 V	VDDSHV0_WKUP	Yes	LVCMOS	PU/PD	1	0/1	Yes
		WKUP_GPIO0_52	7	IO								0		
AB5	WKUP_UART0_TXD	WKUP_UART0_TXD	0	O	OFF	7	1.8 V/3.3 V	VDDSHV0_WKUP	Yes	LVCMOS	PU/PD	1	0/1	Yes
		WKUP_GPIO0_53	7	IO								0		

The following list describes the table column headers:

1. **BALL NUMBER:** Ball numbers on the bottom side associated with each signal on the bottom.
2. **BALL NAME:** Mechanical name from package device (name is taken from muxmode 0).
3. **SIGNAL NAME:** Names of signals multiplexed on each ball (also notice that the name of the ball is the signal name in muxmode 0).

Copyright © 2023 Texas Instruments Incorporated

Note

Table 5-1, *Pin Attributes*, does not take into account the subsystem multiplexing signals. Subsystem multiplexing signals are described in Section 5.3, *Signal Descriptions*.

4. **MUXMODE:** Multiplexing mode number:
   a. MUXMODE 0 is the primary muxmode. The primary muxmode is not necessarily the default muxmode.

Note

The default muxmode is the mode at the release of the reset; also see the BALL RESET REL. MUXMODE column.

   b. MUXMODE 1 through 7 are possible muxmodes for alternate functions. On each pin, some muxmodes are effectively used for alternate functions, while some muxmodes are not used. Only MUXMODE values which correspond to defined functions should be used.
   c. Bootstrap are Special Configuration Pins, latched on rising edge of PORn / RESETFULLn. These are not programable MUXMODE.
   d. An empty box means Not Applicable.
5. **TYPE:** This column describes functionality of the pin when configured for the given mux mode. It does not represent all capabilities of the pin, and as such, there may be other mux mode configurations where these pins operate as a push-pull driver:
   - I = Input
   - O = Output
   - IO = Input or Output
   - IOD = Open drain terminal - Input or Output
   - IOZ = Input, Output or Three-state terminal
   - OZ = Output or Three-state terminal
   - A = Analog
   - PWR = Power
   - GND = Ground
   - CAP = LDO Capacitor.
6. **BALL RESET STATE:** The state of the terminal at power-on reset:
   - DRIVE 0 (OFF): The buffer drives V_{OL} (pulldown or pullup resistor not activated).
   - DRIVE 1 (OFF): The buffer drives V_{OH} (pulldown or pullup resistor not activated).
   - OFF: High-impedance
   - PD: High-impedance with an active pulldown resistor
   - PU: High-impedance with an active pullup resistor
   - An empty box means Not Applicable.
7. **BALL RESET REL. MUXMODE:** This muxmode is automatically configured at the release of the rstoutn signal.
   An empty box means Not Applicable.
8. **I/O VOLTAGE VALUE**: This column describes the IO voltage value (the corresponding power supply).
   An empty box means Not Applicable.
9. **POWER:** The voltage supply that powers the terminal IO buffers.
   An empty box means Not Applicable.
10. **HYS:** Indicates if the input buffer has hysteresis:

Copyright © 2023 Texas Instruments Incorporated

- Yes: With hysteresis
- No: Without hysteresis

  An empty box means No.

For more information, see the hysteresis values in Section 6.6, *Electrical Characteristics*.

11. **BUFFER TYPE:** This column describes the associated output buffer type

    An empty box means Not Applicable.

    For drive strength of the associated output buffer, refer to Section 6.6, *Electrical Characteristics*.
12. **PULL UP/DOWN TYPE:** indicates the presence of an internal pullup or pulldown resistor. Pullup and pulldown resistors can be enabled or disabled via software.
    - PU: Internal pullup
    - PD: Internal pulldown
    - PU/PD: Internal pullup and pulldown
    - An empty box means No pull.
13. **DSIS:** The deselected input state (DSIS) indicates the state driven on the peripheral input (logic "0", logic "1", or "PIN" level) when the peripheral pin function is not selected by any of the PINCNTLx registers.
    - 0: Logic 0 driven on the input signal port of the peripheral.
    - 1: Logic 1 driven on the input signal port of the peripheral.
    - An empty box means Not Applicable.
14. **RXACTIVE / TXDISABLE:**This column indicates the default value of the RXACTIVE / TXDISABLE bits in the PADCONFIG register.
    - RXACTIVE: 0 = receiver disabled, 1 = receiver enabled.
    - TXDISABLE: 0 = driver enabled, 1 = driver disabled.
    - An empty box means Not Applicable.
15. **IO Daisy Chain:**This column indicates which pins can be included in the daisy chain during low power modes.

Note

Configuring two pins to the same input signal is not supported as it can yield unexpected results. This can be easily prevented with the proper software configuration (HiZ mode is not an input signal).

Note

When a pad is set into a multiplexing mode which is not defined by pin multiplexing, that pad’s behavior is undefined. This should be avoided.

Copyright © 2023 Texas Instruments Incorporated

5.3 Signal Descriptions

Many signals are available on multiple pins, according to the software configuration of the pin multiplexing options.

The following list describes the column headers:

1. **SIGNAL NAME:** The name of the signal passing through the pin.

   Note

   In Table 5-1 and Table 5-76 are not described the subsystem multiplexing signals.

2. **DESCRIPTION:** Description of the signal
3. **PIN TYPE:** This column describes functionality of the pin when configured for the given mux mode. It does not represent all capabilities of the pin, and as such, there may be other mux mode configurations where these pins operate as a push-pull driver:
   - I = Input
   - O = Output
   - IO = Input or Output
   - IOD = Open drain terminal - Input or Output
   - IOZ = Input, Output or Three-state terminal
   - OZ = Output or Three-state terminal
   - A = Analog
   - PWR = Power
   - GND = Ground
   - CAP = LDO Capacitor
4. **BALL:** Associated balls bottom

   For more information on the I/O cell configurations, see the *Pad Configuration Registers* section in the device TRM.

5.3.1 ADC

5.3.1.1 MCU Domain

Table 5-2. ADC Signal Descriptions

SIGNAL NAME [1]	DESCRIPTION [2]	PIN TYPE [3]	BALL [4]
MCU_ADC_EXT_TRIGGER0	ADC Trigger Input	I	AC3
MCU_ADC_EXT_TRIGGER1	ADC Trigger Input	I	AD3

Table 5-3. ADC0 Signal Descriptions

SIGNAL NAME [1]	DESCRIPTION [2]	PIN TYPE [3]	BALL [4]
MCU_ADC0_REFN	ADC Reference Input (negative)	A	K2
MCU_ADC0_REFP	ADC Reference Input (positive)	A	K3
MCU_ADC0_AIN0	ADC Analog Input 0	A	K5
MCU_ADC0_AIN1	ADC Analog Input 1	A	J3
MCU_ADC0_AIN2	ADC Analog Input 2	A	J1
MCU_ADC0_AIN3	ADC Analog Input 3	A	J5
MCU_ADC0_AIN4	ADC Analog Input 4	A	K4
MCU_ADC0_AIN5	ADC Analog Input 5	A	J4
MCU_ADC0_AIN6	ADC Analog Input 6	A	J2
MCU_ADC0_AIN7	ADC Analog Input 7	A	J6

Copyright © 2023 Texas Instruments Incorporated

Table 5-4. ADC1 Signal Descriptions

SIGNAL NAME [1]	DESCRIPTION [2]	PIN TYPE [3]	BALL [4]
MCU_ADC1_REFN	ADC Reference Input (negative)	A	H3
MCU_ADC1_REFP	ADC Reference Input (positive)	A	H2
MCU_ADC1_AIN0	ADC Analog Input 0	A	F4
MCU_ADC1_AIN1	ADC Analog Input 1	A	G6
MCU_ADC1_AIN2	ADC Analog Input 2	A	G4
MCU_ADC1_AIN3	ADC Analog Input 3	A	H5
MCU_ADC1_AIN4	ADC Analog Input 4	A	F5
MCU_ADC1_AIN5	ADC Analog Input 5	A	G5
MCU_ADC1_AIN6	ADC Analog Input 6	A	G3
MCU_ADC1_AIN7	ADC Analog Input 7	A	H4

5.3.2 CAL

5.3.2.1 MAIN Domain

Table 5-5. CSI0 Signal Descriptions

SIGNAL NAME [1]	DESCRIPTION [2]	PIN TYPE [3]	BALL [4]
CSI0_RXN0	CSI Differential Receive Input (negative)	I	G28
CSI0_RXN1	CSI Differential Receive Input (negative)	I	H27
CSI0_RXN2	CSI Differential Receive Input (negative)	I	F26
CSI0_RXN3	CSI Differential Receive Input (negative)	I	H25
CSI0_RXN4(1)	CSI Differential Receive Input (negative)	I	G24
CSI0_RXP0	CSI Differential Receive Input (positive)	I	F28
CSI0_RXP1	CSI Differential Receive Input (positive)	I	G27
CSI0_RXP2	CSI Differential Receive Input (positive)	I	G26
CSI0_RXP3	CSI Differential Receive Input (positive)	I	G25
CSI0_RXP4(1)	CSI Differential Receive Input (positive)	I	F24

(1) Line 4 (position 5) supports only data. For more information, see the *Camera Adapter Layer (CAL) Subsystem* section in the device TRM.

Table 5-6. VIN0 Signal Descriptions

SIGNAL NAME [1]	DESCRIPTION [2]	PIN TYPE [3]	BALL [4]
VIN0_HD	Video Input Horizontal Sync	I	P23
VIN0_PCLK	Video Input Pixel Clock	I	R28
VIN0_VD	Video Input Vertical Sync	I	R23
VIN0_DATA0	Video Input Data 0	I	N23
VIN0_DATA1	Video Input Data 1	I	M26
VIN0_DATA2	Video Input Data 2	I	P28
VIN0_DATA3	Video Input Data 3	I	P27
VIN0_DATA4	Video Input Data 4	I	N26
VIN0_DATA5	Video Input Data 5	I	N25
VIN0_DATA6	Video Input Data 6	I	P24
VIN0_DATA7	Video Input Data 7	I	R27
VIN0_DATA8	Video Input Data 8	I	T24
VIN0_DATA9	Video Input Data 9	I	T23

Copyright © 2023 Texas Instruments Incorporated

Table 5-6. VIN0 Signal Descriptions (continued)

SIGNAL NAME [1]	DESCRIPTION [2]	PIN TYPE [3]	BALL [4]
VIN0_DATA10	Video Input Data 10	I	R25
VIN0_DATA11	Video Input Data 11	I	T27
VIN0_DATA12	Video Input Data 12	I	M27
VIN0_DATA13	Video Input Data 13	I	M23
VIN0_DATA14	Video Input Data 14	I	M28
VIN0_DATA15	Video Input Data 15	I	M24

5.3.3 CPSW2G

5.3.3.1 MCU Domain

Table 5-7. CPSW2G0 Signal Descriptions

SIGNAL NAME	DESCRIPTION [2]	PIN TYPE [3]	BALL [4]
MCU_MDIO0_MDC	MDIO Clock	O	L1
MCU_MDIO0_MDIO	MDIO Data	IO	L4
MCU_RGMII1_RXC	RGMII Receive Clock	I	M1
MCU_RGMII1_RX_CTL	RGMII Receive Control	I	N5
MCU_RGMII1_TXC	RGMII Transmit Clock	IO	N1
MCU_RGMII1_TX_CTL	RGMII Transmit Control	O	N4
MCU_RGMII1_RD0	RGMII Receive Data 0	I	L6
MCU_RGMII1_RD1	RGMII Receive Data 1	I	M6
MCU_RGMII1_RD2	RGMII Receive Data 2	I	L5
MCU_RGMII1_RD3	RGMII Receive Data 3	I	L2
MCU_RGMII1_TD0	RGMII Transmit Data 0	O	M5
MCU_RGMII1_TD1	RGMII Transmit Data 1	O	M4
MCU_RGMII1_TD2	RGMII Transmit Data 2	O	M3
MCU_RGMII1_TD3	RGMII Transmit Data 3	O	M2
MCU_RMII1_CRS_DV	RMII Carrier Sense / Data Valid	I	N4
MCU_RMII1_REF_CLK	RMII Reference Clock	I	M1
MCU_RMII1_RX_ER	RMII Receive Data Error	I	N5
MCU_RMII1_TX_EN	RMII Transmit Enable	O	N1
MCU_RMII1_RXD0	RMII Receive Data 0	I	L6
MCU_RMII1_RXD1	RMII Receive Data 1	I	M6
MCU_RMII1_TXD0	RMII Transmit Data 0	O	M5
MCU_RMII1_TXD1	RMII Transmit Data 1	O	M4

5.3.4 DDRSS

5.3.4.1 MAIN Domain

Table 5-8. DDRSS0 Signal Descriptions

SIGNAL NAME [1]	DESCRIPTION [2]	PIN TYPE [3]	BALL [4]
DDR_AC0	DDRSS Address and Command Bus	IO	A10
DDR_AC1	DDRSS Address and Command Bus	IO	D9
DDR_AC2	DDRSS Address and Command Bus	IO	C9
DDR_AC3	DDRSS Address and Command Bus	IO	E9
DDR_AC4	DDRSS Address and Command Bus	IO	A9

Copyright © 2023 Texas Instruments Incorporated

Table 5-8. DDRSS0 Signal Descriptions (continued)

SIGNAL NAME [1]	DESCRIPTION [2]	PIN TYPE [3]	BALL [4]
DDR_AC5	DDRSS Address and Command Bus	IO	E8
DDR_AC6	DDRSS Address and Command Bus	IO	F8
DDR_AC7	DDRSS Address and Command Bus	IO	C7
DDR_AC8	DDRSS Address and Command Bus	IO	C8
DDR_AC9	DDRSS Address and Command Bus	IO	D7
DDR_AC10	DDRSS Address and Command Bus	IO	E7
DDR_AC11	DDRSS Address and Command Bus	IO	A6
DDR_AC12	DDRSS Address and Command Bus	IO	F7
DDR_AC13	DDRSS Address and Command Bus	IO	D6
DDR_AC14	DDRSS Address and Command Bus	IO	C6
DDR_AC15	DDRSS Address and Command Bus	IO	F6
DDR_AC16	DDRSS Address and Command Bus	IO	E6
DDR_AC17	DDRSS Address and Command Bus	IO	E5
DDR_AC18	DDRSS Address and Command Bus	IO	D8
DDR_AC19	DDRSS Address and Command Bus	IO	D10
DDR_AC20	DDRSS Address and Command Bus	IO	E10
DDR_AC21	DDRSS Address and Command Bus	IO	C10
DDR_AC22	DDRSS Address and Command Bus	IO	F11
DDR_AC23	DDRSS Address and Command Bus	IO	B10
DDR_AC24	DDRSS Address and Command Bus	IO	D11
DDR_AC25	DDRSS Address and Command Bus	IO	B11
DDR_AC26	DDRSS Address and Command Bus	IO	C11
DDR_AC27	DDRSS Address and Command Bus	IO	E11
DDR_AC28	DDRSS Address and Command Bus	IO	E12
DDR_AC29	DDRSS Address and Command Bus	IO	D12
DDR_ALERTn	DDRSS Parity Error	IO	D5
DDR_CK0N	DDRSS Differential Clock (negative)	IO	B8
DDR_CK0P	DDRSS Differential Clock (positive)	IO	A8
DDR_CK1N	DDRSS Differential Clock (negative)	IO	B7
DDR_CK1P	DDRSS Differential Clock (positive)	IO	A7
DDR_DM0	DDRSS Data Mask	IO	E1
DDR_DM1	DDRSS Data Mask	IO	C5
DDR_DM2	DDRSS Data Mask	IO	D14
DDR_DM3	DDRSS Data Mask	IO	B17
DDR_DQ0	DDRSS Data	IO	A3
DDR_DQ1	DDRSS Data	IO	B2
DDR_DQ2	DDRSS Data	IO	C2
DDR_DQ3	DDRSS Data	IO	D2
DDR_DQ4	DDRSS Data	IO	E2
DDR_DQ5	DDRSS Data	IO	G1
DDR_DQ6	DDRSS Data	IO	F2
DDR_DQ7	DDRSS Data	IO	F1
DDR_DQ8	DDRSS Data	IO	E3
DDR_DQ9	DDRSS Data	IO	C3
DDR_DQ10	DDRSS Data	IO	D3

Copyright © 2023 Texas Instruments Incorporated

Table 5-8. DDRSS0 Signal Descriptions (continued)

SIGNAL NAME [1]	DESCRIPTION [2]	PIN TYPE [3]	BALL [4]
DDR_DQ11	DDRSS Data	IO	B3
DDR_DQ12	DDRSS Data	IO	D4
DDR_DQ13	DDRSS Data	IO	C4
DDR_DQ14	DDRSS Data	IO	B4
DDR_DQ15	DDRSS Data	IO	B5
DDR_DQ16	DDRSS Data	IO	E13
DDR_DQ17	DDRSS Data	IO	C14
DDR_DQ18	DDRSS Data	IO	B14
DDR_DQ19	DDRSS Data	IO	A14
DDR_DQ20	DDRSS Data	IO	E14
DDR_DQ21	DDRSS Data	IO	B13
DDR_DQ22	DDRSS Data	IO	C13
DDR_DQ23	DDRSS Data	IO	D13
DDR_DQ24	DDRSS Data	IO	D15
DDR_DQ25	DDRSS Data	IO	C15
DDR_DQ26	DDRSS Data	IO	E16
DDR_DQ27	DDRSS Data	IO	E15
DDR_DQ28	DDRSS Data	IO	D16
DDR_DQ29	DDRSS Data	IO	B16
DDR_DQ30	DDRSS Data	IO	C16
DDR_DQ31	DDRSS Data	IO	A17
DDR_DQS0N	DDRSS Complimentary Data Strobe	IO	C1
DDR_DQS0P	DDRSS Data Strobe	IO	D1
DDR_DQS1N	DDRSS Complimentary Data Strobe	IO	A4
DDR_DQS1P	DDRSS Data Strobe	IO	A5
DDR_DQS2N	DDRSS Complimentary Data Strobe	IO	A12
DDR_DQS2P	DDRSS Data Strobe	IO	A13
DDR_DQS3N	DDRSS Complimentary Data Strobe	IO	A16
DDR_DQS3P	DDRSS Data Strobe	IO	A15
DDR_ECC_D0	DDRSS ECC Data	IO	B19
DDR_ECC_D1	DDRSS ECC Data	IO	B18
DDR_ECC_D2	DDRSS ECC Data	IO	C18
DDR_ECC_D3	DDRSS ECC Data	IO	D18
DDR_ECC_D4	DDRSS ECC Data	IO	E18
DDR_ECC_D5	DDRSS ECC Data	IO	E17
DDR_ECC_D6	DDRSS ECC Data	IO	D17
DDR_ECC_DM	DDRSS ECC Data Mask	IO	C17
DDR_ECC_DQSN	DDRSS ECC Complimentary Data Strobe	IO	A18
DDR_ECC_DQSP	DDRSS ECC Data Strobe	IO	A19
DDR_FS_RESETn(3)	Reserved	IO	F16
DDR_RESETn	DDRSS Reset	IO	A11
DDR_VREF0	DDRSS I/O Voltage Reference(1)	A	F12
DDR_VREF_ZQ	DDRSS I/O Voltage Reference for ZQ calibration(1)	A	F15

Copyright © 2023 Texas Instruments Incorporated

Table 5-8. DDRSS0 Signal Descriptions (continued)

SIGNAL NAME [1]	DESCRIPTION [2]	PIN TYPE [3]	BALL [4]
DDR_VTP	DDRSS Calibration Resistor(2)	A	F13

(1) This pin is intended for observation purpose only. No external voltage should be applied to this pin.
(2) An external 240Ω ±1% resistor must be connected between this pin and VSS. No external voltage should be applied to this pin.
(3) Do not connect any signal, test point, or board trace to this signal.

5.3.4.2 DDRSS Mapping

Table 5-9 presents DDRSS interface signal mapping per device memory type.

Note

DDR3L and LPDDR4 memory types are not supported on this SoC.

Table 5-9. DDRSS Signal Mapping

SIGNAL NAME [1]	MEMORY TYPE			PIN TYPE[3]	BALL[4]
	DDR3L(2)	DDR4(1) (2)	LPDDR4(1)		
DDR_AC0	A0	A0	CA0_A	IO	A10
DDR_AC1	A1	A1	CA1_A	IO	D9
DDR_AC2	A2	A2	CA2_A	IO	C9
DDR_AC3	A3	A3	CA3_A	IO	E9
DDR_AC4	A4	A4	CA4_A	IO	A9
DDR_AC5	A5	A5	CA5_A	IO	E8
DDR_AC6	A6	A6	CA0_B	IO	F8
DDR_AC7	A7	A7	CA1_B	IO	C7
DDR_AC8	A8	A8	CA2_B	IO	C8
DDR_AC9	A9	A9	CA3_B	IO	D7
DDR_AC10	A10	A10	CA4_B	IO	E7
DDR_AC11	A11	A11	CA5_B	IO	A6
DDR_AC12	A12	A12	CS0_B	IO	F7
DDR_AC13	A13	A13	CKE0_B	IO	D6
DDR_AC14	A14	A14/WE_n	CS1_B	IO	C6
DDR_AC15	A15	A15/CAS_n	CKE1_B	IO	F6
DDR_AC16	WE_n	A16/RAS_n		IO	E6
DDR_AC17	CAS_n	A17		IO	E5
DDR_AC18	RAS_n	ACT_n		IO	D8
DDR_AC19	BA0	BA0		IO	D10
DDR_AC20	BA1	BA1		IO	E10
DDR_AC21	BA2	BG0		IO	C10
DDR_AC22		BG1		IO	F11
DDR_AC23		PAR		IO	B10
DDR_AC24	CS0_n	CS0_n	CS0_A	IO	D11
DDR_AC25	ODT0	ODT0		IO	B11
DDR_AC26	CKE0	CKE0	CKE0_A	IO	C11
DDR_AC27	CS1_n	CS1_n	CS1_A	IO	E11
DDR_AC28	ODT1	ODT1		IO	E12
DDR_AC29	CKE1	CKE1	CKE1_A	IO	D12
DDR_ALERTn		ALERT_n		IO	D5
DDR_CK0P	CK0	CK0_t	CK_t_A	IO	A8

Copyright © 2023 Texas Instruments Incorporated

Table 5-9. DDRSS Signal Mapping (continued)

SIGNAL NAME [1]	MEMORY TYPE			PIN TYPE[3]	BALL[4]
	DDR3L(2)	DDR4(1) (2)	LPDDR4(1)		
DDR_CK0N	CK0_n	CK0_c	CK_c_A	IO	B8
DDR_CK1P	CK1	CK1_t	CK_t_B	IO	A7
DDR_CK1N	CK1_n	CK1_c	CK_c_B	IO	B7
DDR_DQ0	DQ0	DQ0	DQ0	IO	A3
DDR_DQ1	DQ1	DQ1	DQ1	IO	B2
DDR_DQ2	DQ2	DQ2	DQ2	IO	C2
DDR_DQ3	DQ3	DQ3	DQ3	IO	D2
DDR_DQ4	DQ4	DQ4	DQ4	IO	E2
DDR_DQ5	DQ5	DQ5	DQ5	IO	G1
DDR_DQ6	DQ6	DQ6	DQ6	IO	F2
DDR_DQ7	DQ7	DQ7	DQ7	IO	F1
DDR_DM0	DM0	DM0_n	DMI0	IO	E1
DDR_DQ8	DQ8	DQ8	DQ8	IO	E3
DDR_DQ9	DQ9	DQ9	DQ9	IO	C3
DDR_DQ10	DQ10	DQ10	DQ10	IO	D3
DDR_DQ11	DQ11	DQ11	DQ11	IO	B3
DDR_DQ12	DQ12	DQ12	DQ12	IO	D4
DDR_DQ13	DQ13	DQ13	DQ13	IO	C4
DDR_DQ14	DQ14	DQ14	DQ14	IO	B4
DDR_DQ15	DQ15	DQ15	DQ15	IO	B5
DDR_DM1	DM1	DM1_n	DMI1	IO	C5
DDR_DQ16	DQ16	DQ16	DQ16	IO	E13
DDR_DQ17	DQ17	DQ17	DQ17	IO	C14
DDR_DQ18	DQ18	DQ18	DQ18	IO	B14
DDR_DQ19	DQ19	DQ19	DQ19	IO	A14
DDR_DQ20	DQ20	DQ20	DQ20	IO	E14
DDR_DQ21	DQ21	DQ21	DQ21	IO	B13
DDR_DQ22	DQ22	DQ22	DQ22	IO	C13
DDR_DQ23	DQ23	DQ23	DQ23	IO	D13
DDR_DM2	DM2	DM2_n	DMI2	IO	D14
DDR_DQ24	DQ24	DQ24	DQ24	IO	D15
DDR_DQ25	DQ25	DQ25	DQ25	IO	C15
DDR_DQ26	DQ26	DQ26	DQ26	IO	E16
DDR_DQ27	DQ27	DQ27	DQ27	IO	E15
DDR_DQ28	DQ28	DQ28	DQ28	IO	D16
DDR_DQ29	DQ29	DQ29	DQ29	IO	B16
DDR_DQ30	DQ30	DQ30	DQ30	IO	C16
DDR_DQ31	DQ31	DQ31	DQ31	IO	A17
DDR_DM3	DM3	DM3_n	DMI3	IO	B17
DDR_ECC_D0	DQ32	DQ32	DQ32	IO	B19
DDR_ECC_D1	DQ33	DQ33	DQ33	IO	B18
DDR_ECC_D2	DQ34	DQ34	DQ34	IO	C18
DDR_ECC_D3	DQ35	DQ35	DQ35	IO	D18
DDR_ECC_D4	DQ36	DQ36	DQ36	IO	E18

Copyright © 2023 Texas Instruments Incorporated

Table 5-9. DDRSS Signal Mapping (continued)

SIGNAL NAME [1]	MEMORY TYPE			PIN TYPE[3]	BALL[4]
	DDR3L(2)	DDR4(1) (2)	LPDDR4(1)		
DDR_ECC_D5	DQ37	DQ37	DQ37	IO	E17
DDR_ECC_D6	DQ38	DQ38	DQ38	IO	D17
DDR_ECC_DM	DM4	DM4_n	DM4	IO	C17
DDR_DQS0P	DQS0	DQS0_t	DQS0	IO	D1
DDR_DQS0N	DQS0_n	DQS0_c	DQS0_n	IO	C1
DDR_DQS1P	DQS1	DQS1_t	DQS1	IO	A5
DDR_DQS1N	DQS1_n	DQS1_c	DQS1_n	IO	A4
DDR_DQS2P	DQS2	DQS2_t	DQS2	IO	A13
DDR_DQS2N	DQS2_n	DQS2_c	DQS2_n	IO	A12
DDR_DQS3P	DQS3	DQS3_t	DQS3	IO	A15
DDR_DQS3N	DQS3_n	DQS3_c	DQS3_n	IO	A16
DDR_ECC_DQSP	DQS4	DQS4_t	DQS4	IO	A19
DDR_ECC_DQSN	DQS4_n	DQS4_c	DQS4_n	IO	A18
DDR_RESETn	RESET_n	RESET_n	RESET_n	IO	A11
DDR_VREF0	VREF0	VREF0	VREF0	A	F12
DDR_VREF_ZQ	VREF_ZQ	VREF_ZQ	VREF_ZQ	A	F15
DDR_VTP	VTP	VTP	VTP	A	F13

(1) This device cannot support two independent channels.
(2) Only single rank is supported for DDR3L and DDR4.

5.3.5 DMTIMER

5.3.5.1 MAIN Domain

Table 5-10. DMTIMER Signal Descriptions

SIGNAL NAME [1]	DESCRIPTION [2]	PIN TYPE [3]	BALL [4]
TIMER_IO0	Timer Inputs and Outputs (not tied to single timer instance)	IO	B22
TIMER_IO1	Timer Inputs and Outputs (not tied to single timer instance)	IO	C23
TIMER_IO2	Timer Inputs and Outputs (not tied to single timer instance)	IO	P23
TIMER_IO3	Timer Inputs and Outputs (not tied to single timer instance)	IO	R23
TIMER_IO4	Timer Inputs and Outputs (not tied to single timer instance)	IO	AG11
TIMER_IO5	Timer Inputs and Outputs (not tied to single timer instance)	IO	AD11
TIMER_IO6	Timer Inputs and Outputs (not tied to single timer instance)	IO	T24
TIMER_IO7	Timer Inputs and Outputs (not tied to single timer instance)	IO	T23

5.3.5.2 MCU Domain

Table 5-11. DMTIMER Signal Descriptions

SIGNAL NAME [1]	DESCRIPTION [2]	PIN TYPE [3]	BALL [4]
MCU_TIMER_IO0	Timer Inputs and Outputs (not tied to single timer instance)	IO	N3

Copyright © 2023 Texas Instruments Incorporated

Table 5-11. DMTIMER Signal Descriptions (continued)

SIGNAL NAME [1]	DESCRIPTION [2]	PIN TYPE [3]	BALL [4]
MCU_TIMER_IO1	Timer Inputs and Outputs (not tied to single timer instance)	IO	AB2

5.3.6 DSS

5.3.6.1 MAIN Domain

Table 5-12. DSS0 Signal Descriptions

SIGNAL NAME [1]	DESCRIPTION [2]	PIN TYPE [3]	BALL [4]
VOUT1_DE	Video Output Data Enable	O	T23
VOUT1_EXTPCLKIN	Video Output External Pixel Clock Input	I	R25
VOUT1_HSYNC	Video Output Horizontal Sync	O	T24
VOUT1_PCLK	Video Output Pixel Clock Output	O	R24
VOUT1_VSYNC	Video Output Vertical Sync	O	T25
VOUT1_DATA0	Video Output Data 0	O	M27
VOUT1_DATA1	Video Output Data 1	O	M23
VOUT1_DATA2	Video Output Data 2	O	M28
VOUT1_DATA3	Video Output Data 3	O	M24
VOUT1_DATA4	Video Output Data 4	O	N24
VOUT1_DATA5	Video Output Data 5	O	N27
VOUT1_DATA6	Video Output Data 6	O	N28
VOUT1_DATA7	Video Output Data 7	O	M25
VOUT1_DATA8	Video Output Data 8	O	N23
VOUT1_DATA9	Video Output Data 9	O	M26
VOUT1_DATA10	Video Output Data 10	O	P28
VOUT1_DATA11	Video Output Data 11	O	P27
VOUT1_DATA12	Video Output Data 12	O	N26
VOUT1_DATA13	Video Output Data 13	O	N25
VOUT1_DATA14	Video Output Data 14	O	P24
VOUT1_DATA15	Video Output Data 15	O	R27
VOUT1_DATA16	Video Output Data 16	O	R28
VOUT1_DATA17	Video Output Data 17	O	P25
VOUT1_DATA18	Video Output Data 18	O	P26
VOUT1_DATA19	Video Output Data 19	O	U28
VOUT1_DATA20	Video Output Data 20	O	T28
VOUT1_DATA21	Video Output Data 21	O	P23
VOUT1_DATA22	Video Output Data 22	O	R26
VOUT1_DATA23	Video Output Data 23	O	R23

5.3.7 ECAP

5.3.7.1 MAIN Domain

Table 5-13. ECAP0 Signal Descriptions

SIGNAL NAME [1]	DESCRIPTION [2]	PIN TYPE [3]	BALL [4]
ECAP0_IN_APWM_OUT	Enhanced Capture (ECAP) Input or Auxiliary PWM (APWM) Ouput	IO	D21

Copyright © 2023 Texas Instruments Incorporated

5.3.8 EHRPWM

5.3.8.1 MAIN Domain

Table 5-14. EHRPWM Signal Descriptions

SIGNAL NAME [1]	DESCRIPTION [2]	PIN TYPE [3]	BALL [4]
EHRPWM_SOCA	EHRPWM Start of Conversion A	O	AC19
EHRPWM_SOCB	EHRPWM Start of Conversion B	O	AF16
EHRPWM_TZn_IN0	EHRPWM Trip Zone Input 0 (active low)	I	AH17
EHRPWM_TZn_IN1	EHRPWM Trip Zone Input 1 (active low)	I	AC19
EHRPWM_TZn_IN2	EHRPWM Trip Zone Input 2 (active low)	I	AF16
EHRPWM_TZn_IN3	EHRPWM Trip Zone Input 3 (active low)	I	AG14
EHRPWM_TZn_IN4	EHRPWM Trip Zone Input 4 (active low)	I	AE15
EHRPWM_TZn_IN5	EHRPWM Trip Zone Input 5 (active low)	I	AC15

Table 5-15. EHRPWM0 Signal Descriptions

SIGNAL NAME [1]	DESCRIPTION [2]	PIN TYPE [3]	BALL [4]
EHRPWM0_A	EHRPWM Output A	IO	AG18
EHRPWM0_B	EHRPWM Output B	IO	AG17
EHRPWM0_SYNCI	Sync Input to EHRPWM module from an external pin	I	AF18
EHRPWM0_SYNCO	Sync Output to EHRPWM module to an external pin	O	AE18

Table 5-16. EHRPWM1 Signal Descriptions

SIGNAL NAME [1]	DESCRIPTION [2]	PIN TYPE [3]	BALL [4]
EHRPWM1_A	EHRPWM Output A	IO	AF17
EHRPWM1_B	EHRPWM Output B	IO	AE17

Table 5-17. EHRPWM2 Signal Descriptions

SIGNAL NAME [1]	DESCRIPTION [2]	PIN TYPE [3]	BALL [4]
EHRPWM2_A	EHRPWM Output A	IO	AH16
EHRPWM2_B	EHRPWM Output B	IO	AG16

Table 5-18. EHRPWM3 Signal Descriptions

SIGNAL NAME [1]	DESCRIPTION [2]	PIN TYPE [3]	BALL [4]
EHRPWM3_A	EHRPWM Output A	IO	AH15
EHRPWM3_B	EHRPWM Output B	IO	AC16
EHRPWM3_SYNCI	Sync Input to EHRPWM module from an external pin	I	AD17
EHRPWM3_SYNCO	Sync Output to EHRPWM module to an external pin	O	AH14

Table 5-19. EHRPWM4 Signal Descriptions

SIGNAL NAME [1]	DESCRIPTION [2]	PIN TYPE [3]	BALL [4]
EHRPWM4_A	EHRPWM Output A	IO	AG15
EHRPWM4_B	EHRPWM Output B	IO	AC17

Table 5-20. EHRPWM5 Signal Descriptions

SIGNAL NAME [1]	DESCRIPTION [2]	PIN TYPE [3]	BALL [4]
EHRPWM5_A	EHRPWM Output A	IO	AD15

Copyright © 2023 Texas Instruments Incorporated

Table 5-20. EHRPWM5 Signal Descriptions (continued)

SIGNAL NAME [1]	DESCRIPTION [2]	PIN TYPE [3]	BALL [4]
EHRPWM5_B	EHRPWM Output B	IO	AF14

5.3.9 EQEP

5.3.9.1 MAIN Domain

Table 5-21. EQEP0 Signal Descriptions

SIGNAL NAME [1]	DESCRIPTION [2]	PIN TYPE [3]	BALL [4]
EQEP0_A	EQEP Quadrature Input A	I	AB26
EQEP0_B	EQEP Quadrature Input B	I	AA25
EQEP0_I	EQEP Index	IO	AA28
EQEP0_S	EQEP Strobe	IO	U23

Table 5-22. EQEP1 Signal Descriptions

SIGNAL NAME [1]	DESCRIPTION [2]	PIN TYPE [3]	BALL [4]
EQEP1_A	EQEP Quadrature Input A	I	AH22
EQEP1_B	EQEP Quadrature Input B	I	AE21
EQEP1_I	EQEP Index	IO	AC20
EQEP1_S	EQEP Strobe	IO	AC22

Table 5-23. EQEP2 Signal Descriptions

SIGNAL NAME [1]	DESCRIPTION [2]	PIN TYPE [3]	BALL [4]
EQEP2_A	EQEP Quadrature Input A	I	D25
EQEP2_B	EQEP Quadrature Input B	I	B26
EQEP2_I	EQEP Index	IO	A24
EQEP2_S	EQEP Strobe	IO	E24

5.3.10 GPIO

5.3.10.1 MAIN Domain

Table 5-24. GPIO0 Signal Descriptions

SIGNAL NAME [1]	DESCRIPTION [2]	PIN TYPE [3]	BALL [4]
GPIO0_0	General Purpose Input/Output	IO	M27
GPIO0_1	General Purpose Input/Output	IO	M23
GPIO0_2	General Purpose Input/Output	IO	M28
GPIO0_3	General Purpose Input/Output	IO	M24
GPIO0_4	General Purpose Input/Output	IO	N24
GPIO0_5	General Purpose Input/Output	IO	N27
GPIO0_6	General Purpose Input/Output	IO	N28
GPIO0_7	General Purpose Input/Output	IO	M25
GPIO0_8	General Purpose Input/Output	IO	N23
GPIO0_9	General Purpose Input/Output	IO	M26
GPIO0_10	General Purpose Input/Output	IO	P28
GPIO0_11	General Purpose Input/Output	IO	P27
GPIO0_12	General Purpose Input/Output	IO	N26
GPIO0_13	General Purpose Input/Output	IO	N25

Copyright © 2023 Texas Instruments Incorporated

Table 5-24. GPIO0 Signal Descriptions (continued)

SIGNAL NAME [1]	DESCRIPTION [2]	PIN TYPE [3]	BALL [4]
GPIO0_14	General Purpose Input/Output	IO	P24
GPIO0_15	General Purpose Input/Output	IO	R27
GPIO0_16	General Purpose Input/Output	IO	R28
GPIO0_17	General Purpose Input/Output	IO	P25
GPIO0_18	General Purpose Input/Output	IO	P26
GPIO0_19	General Purpose Input/Output	IO	U28
GPIO0_20	General Purpose Input/Output	IO	T28
GPIO0_21	General Purpose Input/Output	IO	P23
GPIO0_22	General Purpose Input/Output	IO	R26
GPIO0_23	General Purpose Input/Output	IO	R23
GPIO0_24	General Purpose Input/Output	IO	T25
GPIO0_25	General Purpose Input/Output	IO	T24
GPIO0_26	General Purpose Input/Output	IO	R24
GPIO0_27	General Purpose Input/Output	IO	T23
GPIO0_28	General Purpose Input/Output	IO	R25
GPIO0_29	General Purpose Input/Output	IO	T27
GPIO0_30	General Purpose Input/Output	IO	AF18
GPIO0_31	General Purpose Input/Output	IO	AE18
GPIO0_32	General Purpose Input/Output	IO	AH17
GPIO0_33	General Purpose Input/Output	IO	AG18
GPIO0_34	General Purpose Input/Output	IO	AG17
GPIO0_35	General Purpose Input/Output	IO	AF17
GPIO0_36	General Purpose Input/Output	IO	AE17
GPIO0_37	General Purpose Input/Output	IO	AC19
GPIO0_38	General Purpose Input/Output	IO	AH16
GPIO0_39	General Purpose Input/Output	IO	AG16
GPIO0_40	General Purpose Input/Output	IO	AF16
GPIO0_41	General Purpose Input/Output	IO	AE16
GPIO0_42	General Purpose Input/Output	IO	AD16
GPIO0_43	General Purpose Input/Output	IO	AH15
GPIO0_44	General Purpose Input/Output	IO	AC16
GPIO0_45	General Purpose Input/Output	IO	AD17
GPIO0_46	General Purpose Input/Output	IO	AH14
GPIO0_47	General Purpose Input/Output	IO	AG14
GPIO0_48	General Purpose Input/Output	IO	AG15
GPIO0_49	General Purpose Input/Output	IO	AC17
GPIO0_50	General Purpose Input/Output	IO	AE15
GPIO0_51	General Purpose Input/Output	IO	AD15
GPIO0_52	General Purpose Input/Output	IO	AF14
GPIO0_53	General Purpose Input/Output	IO	AC15
GPIO0_54	General Purpose Input/Output	IO	AD14
GPIO0_55	General Purpose Input/Output	IO	AE14
GPIO0_56	General Purpose Input/Output	IO	AE22
GPIO0_57	General Purpose Input/Output	IO	AG24
GPIO0_58	General Purpose Input/Output	IO	AF23

Copyright © 2023 Texas Instruments Incorporated

Table 5-24. GPIO0 Signal Descriptions (continued)

SIGNAL NAME [1]	DESCRIPTION [2]	PIN TYPE [3]	BALL [4]
GPIO0_59	General Purpose Input/Output	IO	AD21
GPIO0_60	General Purpose Input/Output	IO	AG23
GPIO0_61	General Purpose Input/Output	IO	AF27
GPIO0_62	General Purpose Input/Output	IO	AF22
GPIO0_63	General Purpose Input/Output	IO	AG27
GPIO0_64	General Purpose Input/Output	IO	AF28
GPIO0_65	General Purpose Input/Output	IO	AF26
GPIO0_66	General Purpose Input/Output	IO	AH25
GPIO0_67	General Purpose Input/Output	IO	AF21
GPIO0_68	General Purpose Input/Output	IO	AH20
GPIO0_69	General Purpose Input/Output	IO	AH21
GPIO0_70	General Purpose Input/Output	IO	AG20
GPIO0_71	General Purpose Input/Output	IO	AD19
GPIO0_72	General Purpose Input/Output	IO	AD20
GPIO0_73	General Purpose Input/Output	IO	AH26
GPIO0_74	General Purpose Input/Output	IO	AG25
GPIO0_75	General Purpose Input/Output	IO	AG26
GPIO0_76	General Purpose Input/Output	IO	AH24
GPIO0_77	General Purpose Input/Output	IO	AH23
GPIO0_78	General Purpose Input/Output	IO	AG21
GPIO0_79	General Purpose Input/Output	IO	AH22
GPIO0_80	General Purpose Input/Output	IO	AE21
GPIO0_81	General Purpose Input/Output	IO	AC22
GPIO0_82	General Purpose Input/Output	IO	AG22
GPIO0_83	General Purpose Input/Output	IO	AD23
GPIO0_84	General Purpose Input/Output	IO	AE24
GPIO0_85	General Purpose Input/Output	IO	AF25
GPIO0_86	General Purpose Input/Output	IO	AF24
GPIO0_87	General Purpose Input/Output	IO	AC20
GPIO0_88	General Purpose Input/Output	IO	AE20
GPIO0_89	General Purpose Input/Output	IO	AF19
GPIO0_90	General Purpose Input/Output	IO	AH19
GPIO0_91	General Purpose Input/Output	IO	AG19
GPIO0_92	General Purpose Input/Output	IO	AE19
GPIO0_93	General Purpose Input/Output	IO	AE23
GPIO0_94	General Purpose Input/Output	IO	AD22
GPIO0_95	General Purpose Input/Output	IO	AC21

Copyright © 2023 Texas Instruments Incorporated

Table 5-25. GPIO1 Signal Descriptions

SIGNAL NAME [1]	DESCRIPTION [2]	PIN TYPE [3]	ACD [4]
GPIO1_0	General Purpose Input/Output	IO	AD18
GPIO1_1	General Purpose Input/Output	IO	AH18
GPIO1_2	General Purpose Input/Output	IO	D25
GPIO1_3	General Purpose Input/Output	IO	B26
GPIO1_4	General Purpose Input/Output	IO	A24
GPIO1_5	General Purpose Input/Output	IO	E24
GPIO1_6	General Purpose Input/Output	IO	A25
GPIO1_7	General Purpose Input/Output	IO	C26
GPIO1_8	General Purpose Input/Output	IO	E25
GPIO1_9	General Purpose Input/Output	IO	A26
GPIO1_10	General Purpose Input/Output	O	B25
GPIO1_11	General Purpose Input/Output	IO	B27
GPIO1_12	General Purpose Input/Output	I	C25
GPIO1_13	General Purpose Input/Output	IO(1)	A23
GPIO1_14	General Purpose Input/Output	IO(1)	B23
GPIO1_15	General Purpose Input/Output	IO	AG13
GPIO1_16	General Purpose Input/Output	IO	AF13
GPIO1_17	General Purpose Input/Output	IO	AH13
GPIO1_18	General Purpose Input/Output	IO	AE13
GPIO1_19	General Purpose Input/Output	IO	AD13
GPIO1_20	General Purpose Input/Output	IO	AD12
GPIO1_21	General Purpose Input/Output	IO	AG12
GPIO1_22	General Purpose Input/Output	IO	AH12
GPIO1_23	General Purpose Input/Output	IO	AE12
GPIO1_24	General Purpose Input/Output	IO	AF12
GPIO1_25	General Purpose Input/Output	IO	AF11
GPIO1_26	General Purpose Input/Output	IO	AE11
GPIO1_27	General Purpose Input/Output	IO	AG11
GPIO1_28	General Purpose Input/Output	IO	AD11
GPIO1_29	General Purpose Input/Output	IO	V24
GPIO1_30	General Purpose Input/Output	IO	W25
GPIO1_31	General Purpose Input/Output	IO	W24
GPIO1_32	General Purpose Input/Output	IO	AA27
GPIO1_33	General Purpose Input/Output	IO	Y24
GPIO1_34	General Purpose Input/Output	IO	V28
GPIO1_35	General Purpose Input/Output	IO	Y25
GPIO1_36	General Purpose Input/Output	IO	U27
GPIO1_37	General Purpose Input/Output	IO	V27
GPIO1_38	General Purpose Input/Output	IO	V26
GPIO1_39	General Purpose Input/Output	IO	U25
GPIO1_40	General Purpose Input/Output	IO	AB25
GPIO1_41	General Purpose Input/Output	IO	AD27
GPIO1_42	General Purpose Input/Output	IO	AC26
GPIO1_43	General Purpose Input/Output	IO	AD26
GPIO1_44	General Purpose Input/Output	IO	AA24

Copyright © 2023 Texas Instruments Incorporated

Table 5-25. GPIO1 Signal Descriptions (continued)

SIGNAL NAME [1]	DESCRIPTION [2]	PIN TYPE [3]	ACD [4]
GPIO1_45	General Purpose Input/Output	IO	AD28
GPIO1_46	General Purpose Input/Output	IO	U26
GPIO1_47	General Purpose Input/Output	IO	V25
GPIO1_48	General Purpose Input/Output	IO	U24
GPIO1_49	General Purpose Input/Output	IO	AB28
GPIO1_50	General Purpose Input/Output	IO	AC28
GPIO1_51	General Purpose Input/Output	IO	AC27
GPIO1_52	General Purpose Input/Output	IO	AB26
GPIO1_53	General Purpose Input/Output	IO	AA25
GPIO1_54	General Purpose Input/Output	IO	U23
GPIO1_55	General Purpose Input/Output	IO	AB27
GPIO1_56	General Purpose Input/Output	IO	W28
GPIO1_57	General Purpose Input/Output	IO	W27
GPIO1_58	General Purpose Input/Output	IO	Y28
GPIO1_59	General Purpose Input/Output	IO	AA28
GPIO1_60	General Purpose Input/Output	IO	AB24
GPIO1_61	General Purpose Input/Output	IO	AC25
GPIO1_62	General Purpose Input/Output	IO	AD25
GPIO1_63	General Purpose Input/Output	IO	AD24
GPIO1_64	General Purpose Input/Output	IO	AE27
GPIO1_65	General Purpose Input/Output	IO	AC24
GPIO1_66	General Purpose Input/Output	IO	Y27
GPIO1_67	General Purpose Input/Output	IO	Y26
GPIO1_68	General Purpose Input/Output	IO	W26
GPIO1_69	General Purpose Input/Output	IO	AE26
GPIO1_70	General Purpose Input/Output	IO	AE28
GPIO1_71	General Purpose Input/Output	IO	AD9
GPIO1_72	General Purpose Input/Output	IO	AC8
GPIO1_73	General Purpose Input/Output	IO	D27
GPIO1_74	General Purpose Input/Output	IO	D26
GPIO1_75	General Purpose Input/Output	IO	E27
GPIO1_76	General Purpose Input/Output	IO	D28
GPIO1_77	General Purpose Input/Output	O	C27
GPIO1_78	General Purpose Input/Output	IO	C28
GPIO1_79	General Purpose Input/Output	IO(1)	B24
GPIO1_80	General Purpose Input/Output	IO(1)	C24
GPIO1_86	General Purpose Input/Output	IO	D21
GPIO1_87	General Purpose Input/Output	IO	A22
GPIO1_88	General Purpose Input/Output	IO	B22
GPIO1_89	General Purpose Input/Output	IO	C23

(1) When OSC1 is being used with an external crystal, this pin must only be used as an input. The output functionality must be disabled.

Copyright © 2023 Texas Instruments Incorporated

5.3.10.2 WKUP Domain

Table 5-26. GPIO0 Signal Descriptions

SIGNAL NAME [1]	DESCRIPTION [2]	PIN TYPE [3]	BALL [4]
WKUP_GPIO0_0	General Purpose Input/Output	IO	AF4
WKUP_GPIO0_1	General Purpose Input/Output	IO	AF3
WKUP_GPIO0_2	General Purpose Input/Output	IO	AE3
WKUP_GPIO0_3	General Purpose Input/Output	IO	AD1
WKUP_GPIO0_4	General Purpose Input/Output	IO	AC3
WKUP_GPIO0_5	General Purpose Input/Output	IO	AD3
WKUP_GPIO0_6	General Purpose Input/Output	IO	AC2
WKUP_GPIO0_7	General Purpose Input/Output	IO	AC1
WKUP_GPIO0_8	General Purpose Input/Output	IO	AC5
WKUP_GPIO0_9	General Purpose Input/Output	IO	AB4
WKUP_GPIO0_10	General Purpose Input/Output	IO	AB3
WKUP_GPIO0_11	General Purpose Input/Output	IO	AB2
WKUP_GPIO0_12	General Purpose Input/Output	IO	V1
WKUP_GPIO0_13	General Purpose Input/Output	IO	U1
WKUP_GPIO0_14	General Purpose Input/Output	IO	U2
WKUP_GPIO0_15	General Purpose Input/Output	IO	U4
WKUP_GPIO0_16	General Purpose Input/Output	IO	U5
WKUP_GPIO0_17	General Purpose Input/Output	IO	T2
WKUP_GPIO0_18	General Purpose Input/Output	IO	T3
WKUP_GPIO0_19	General Purpose Input/Output	IO	T4
WKUP_GPIO0_20	General Purpose Input/Output	IO	T5
WKUP_GPIO0_21	General Purpose Input/Output	IO	R2
WKUP_GPIO0_22	General Purpose Input/Output	IO	R3
WKUP_GPIO0_23	General Purpose Input/Output	IO	R4
WKUP_GPIO0_24	General Purpose Input/Output	IO	R5
WKUP_GPIO0_25	General Purpose Input/Output	IO	T1
WKUP_GPIO0_26	General Purpose Input/Output	IO	R1
WKUP_GPIO0_27	General Purpose Input/Output	IO	P2
WKUP_GPIO0_28	General Purpose Input/Output	IO	P3
WKUP_GPIO0_29	General Purpose Input/Output	IO	P4
WKUP_GPIO0_30	General Purpose Input/Output	IO	P5
WKUP_GPIO0_31	General Purpose Input/Output	IO	P1
WKUP_GPIO0_32	General Purpose Input/Output	IO	N2
WKUP_GPIO0_33	General Purpose Input/Output	IO	N3
WKUP_GPIO0_34	General Purpose Input/Output	IO	N4
WKUP_GPIO0_35	General Purpose Input/Output	IO	N5
WKUP_GPIO0_36	General Purpose Input/Output	IO	M2
WKUP_GPIO0_37	General Purpose Input/Output	IO	M3
WKUP_GPIO0_38	General Purpose Input/Output	IO	M4
WKUP_GPIO0_39	General Purpose Input/Output	IO	M5
WKUP_GPIO0_40	General Purpose Input/Output	IO	N1
WKUP_GPIO0_41	General Purpose Input/Output	IO	M1
WKUP_GPIO0_42	General Purpose Input/Output	IO	L2

Copyright © 2023 Texas Instruments Incorporated

Table 5-26. GPIO0 Signal Descriptions (continued)

SIGNAL NAME [1]	DESCRIPTION [2]	PIN TYPE [3]	BALL [4]
WKUP_GPIO0_43	General Purpose Input/Output	IO	L5
WKUP_GPIO0_44	General Purpose Input/Output	IO	M6
WKUP_GPIO0_45	General Purpose Input/Output	IO	L6
WKUP_GPIO0_46	General Purpose Input/Output	IO	L4
WKUP_GPIO0_47	General Purpose Input/Output	IO	L1
WKUP_GPIO0_48	General Purpose Input/Output	IO	Y1
WKUP_GPIO0_49	General Purpose Input/Output	IO	Y3
WKUP_GPIO0_50	General Purpose Input/Output	IO	Y2
WKUP_GPIO0_51	General Purpose Input/Output	IO	Y4
WKUP_GPIO0_52	General Purpose Input/Output	IO	AB1
WKUP_GPIO0_53	General Purpose Input/Output	IO	AB5
WKUP_GPIO0_54	General Purpose Input/Output	IO	W1
WKUP_GPIO0_55	General Purpose Input/Output	IO	W2

5.3.11 GPMC

5.3.11.1 MAIN Domain

Table 5-27. GPMC0 Signal Descriptions

SIGNAL NAME [1]	DESCRIPTION [2]	PIN TYPE [3]	BALL [4]
GPMC0_ADVn_ALE	GPMC Address Valid (active low) or Address Latch Enable	O	P25
GPMC0_CLK	GPMC Clock Output	O	R28
GPMC0_DIR	GPMC Data Bus Signal Direction Control	O	T24
GPMC0_OEn_REn	GPMC Output Enable (active low) or Read Enable (active low)	O	P26
GPMC0_WEn	GPMC Write Enable (active low)	O	U28
GPMC0_WPn	GPMC Flash Write Protect (active low)	O	T25
GPMC0_A0	GPMC Address 0 Output. Only used to effectively address 8-bit data non-multiplexed memories	OZ	AE14
GPMC0_A1	GPMC address 1 Output in A/D non-multiplexed mode and Address 17 in A/D multiplexed mode	OZ	AD14
GPMC0_A2	GPMC address 2 Output in A/D non-multiplexed mode and Address 18 in A/D multiplexed mode	OZ	AC15
GPMC0_A3	GPMC address 3 Output in A/D non-multiplexed mode and Address 19 in A/D multiplexed mode	OZ	AF14
GPMC0_A4	GPMC address 4 Output in A/D non-multiplexed mode and Address 20 in A/D multiplexed mode	OZ	AD15
GPMC0_A5	GPMC address 5 Output in A/D non-multiplexed mode and Address 21 in A/D multiplexed mode	OZ	AE15
GPMC0_A6	GPMC address 6 Output in A/D non-multiplexed mode and Address 22 in A/D multiplexed mode	OZ	AC17
GPMC0_A7	GPMC address 7 Output in A/D non-multiplexed mode and Address 23 in A/D multiplexed mode	OZ	AG15
GPMC0_A8	GPMC address 8 Output in A/D non-multiplexed mode and Address 24 in A/D multiplexed mode	OZ	AG14
GPMC0_A9	GPMC address 9 Output in A/D non-multiplexed mode and Address 25 in A/D multiplexed mode	OZ	AH14
GPMC0_A10	GPMC address 10 Output in A/D non-multiplexed mode and Address 26 in A/D multiplexed mode	OZ	AD17

Copyright © 2023 Texas Instruments Incorporated

Table 5-27. GPMC0 Signal Descriptions (continued)

SIGNAL NAME [1]	DESCRIPTION [2]	PIN TYPE [3]	BALL [4]
GPMC0_A11	GPMC address 11 Output in A/D non-multiplexed mode and unused in A/D multiplexed mode	OZ	AC16
GPMC0_A12	GPMC address 12 Output in A/D non-multiplexed mode and unused in A/D multiplexed mode	OZ	AH15
GPMC0_A13	GPMC address 13 Output in A/D non-multiplexed mode and unused in A/D multiplexed mode	OZ	AD16
GPMC0_A14	GPMC address 14 Output in A/D non-multiplexed mode and unused in A/D multiplexed mode	OZ	AE16
GPMC0_A15	GPMC address 15 Output in A/D non-multiplexed mode and unused in A/D multiplexed mode	OZ	AF16
GPMC0_A16	GPMC address 16 Output in A/D non-multiplexed mode and unused in A/D multiplexed mode	OZ	AG16
GPMC0_A17	GPMC address 17 Output in A/D non-multiplexed mode and unused in A/D multiplexed mode	OZ	AH16
GPMC0_A18	GPMC address 18 Output in A/D non-multiplexed mode and unused in A/D multiplexed mode	OZ	AC19
GPMC0_A19	GPMC address 19 Output in A/D non-multiplexed mode and unused in A/D multiplexed mode	OZ	AE17
GPMC0_A20	GPMC address 20 Output in A/D non-multiplexed mode and unused in A/D multiplexed mode	OZ	AF17
GPMC0_A21	GPMC address 21 Output in A/D non-multiplexed mode and unused in A/D multiplexed mode	OZ	AG17
GPMC0_A22	GPMC address 22 Output in A/D non-multiplexed mode and unused in A/D multiplexed mode	OZ	AG18
GPMC0_A23	GPMC address 23 Output in A/D non-multiplexed mode and unused in A/D multiplexed mode	OZ	AH17
GPMC0_A24	GPMC address 24 Output in A/D non-multiplexed mode and unused in A/D multiplexed mode	OZ	AE18
GPMC0_A25	GPMC address 25 Output in A/D non-multiplexed mode and unused in A/D multiplexed mode	OZ	AF18
GPMC0_A26	GPMC address 26 Output in A/D non-multiplexed mode and unused in A/D multiplexed mode	OZ	T27
GPMC0_A27	GPMC address 27 in A/D non-multiplexed mode and Address 27 in A/D multiplexed mode	OZ	R25
GPMC0_AD0	GPMC Data 0 Input/Output in A/D non-multiplexed mode and additionally Address 1 Output in A/D multiplexed mode	IO	M27
GPMC0_AD1	GPMC Data 1 Input/Output in A/D non-multiplexed mode and additionally Address 2 Output in A/D multiplexed mode	IO	M23
GPMC0_AD2	GPMC Data 2 Input/Output in A/D non-multiplexed mode and additionally Address 3 Output in A/D multiplexed mode	IO	M28
GPMC0_AD3	GPMC Data 3 Input/Output in A/D non-multiplexed mode and additionally Address 4 Output in A/D multiplexed mode	IO	M24
GPMC0_AD4	GPMC Data 4 Input/Output in A/D non-multiplexed mode and additionally Address 5 Output in A/D multiplexed mode	IO	N24
GPMC0_AD5	GPMC Data 5 Input/Output in A/D non-multiplexed mode and additionally Address 6 Output in A/D multiplexed mode	IO	N27

Copyright © 2023 Texas Instruments Incorporated

Table 5-27. GPMC0 Signal Descriptions (continued)

SIGNAL NAME [1]	DESCRIPTION [2]	PIN TYPE [3]	BALL [4]
GPMC0_AD6	GPMC Data 6 Input/Output in A/D non-multiplexed mode and additionally Address 7 Output in A/D multiplexed mode	IO	N28
GPMC0_AD7	GPMC Data 7 Input/Output in A/D non-multiplexed mode and additionally Address 8 Output in A/D multiplexed mode	IO	M25
GPMC0_AD8	GPMC Data 8 Input/Output in A/D non-multiplexed mode and additionally Address 9 Output in A/D multiplexed mode	IO	N23
GPMC0_AD9	GPMC Data 9 Input/Output in A/D non-multiplexed mode and additionally Address 10 Output in A/D multiplexed mode	IO	M26
GPMC0_AD10	GPMC Data 10 Input/Output in A/D non-multiplexed mode and additionally Address 11 Output in A/D multiplexed mode	IO	P28
GPMC0_AD11	GPMC Data 11 Input/Output in A/D non-multiplexed mode and additionally Address 12 Output in A/D multiplexed mode	IO	P27
GPMC0_AD12	GPMC Data 12 Input/Output in A/D non-multiplexed mode and additionally Address 13 Output in A/D multiplexed mode	IO	N26
GPMC0_AD13	GPMC Data 13 Input/Output in A/D non-multiplexed mode and additionally Address 14 Output in A/D multiplexed mode	IO	N25
GPMC0_AD14	GPMC Data 14 Input/Output in A/D non-multiplexed mode and additionally Address 15 Output in A/D multiplexed mode	IO	P24
GPMC0_AD15	GPMC Data 15 Input/Output in A/D non-multiplexed mode and additionally Address 16 Output in A/D multiplexed mode	IO	R27
GPMC0_BE0n_CLE	GPMC Lower-Byte Enable (active low) or Command Latch Enable	O	T28
GPMC0_BE1n	GPMC Upper-Byte Enable (active low)	O	P23
GPMC0_CSn0	GPMC Chip Select 0 (active low)	O	R24
GPMC0_CSn1	GPMC Chip Select 1 (active low)	O	T23
GPMC0_CSn2	GPMC Chip Select 2 (active low)	O	R25
GPMC0_CSn3	GPMC Chip Select 3 (active low)	O	T27
GPMC0_WAIT0	GPMC External Indication of Wait	I	R26
GPMC0_WAIT1	GPMC External Indication of Wait	I	R23

5.3.12 HyperBus

Note

HyperBus is not available on this device.

5.3.12.1 MCU Domain

Table 5-28. HYPERBUS0 Signal Descriptions

SIGNAL NAME [1]	DESCRIPTION [2]	PIN TYPE [3]	BALL [4]
MCU_HYPERBUS0_CK	Hyperbus Differential Clock (positive)	O	V1
MCU_HYPERBUS0_CKn	Hyperbus Differential Clock (negative)	O	U1
MCU_HYPERBUS0_INTn	Hyperbus Interrupt (active low)	I	P2

Copyright © 2023 Texas Instruments Incorporated

Table 5-28. HYPERBUS0 Signal Descriptions (continued)

SIGNAL NAME [1]	DESCRIPTION [2]	PIN TYPE [3]	BALL [4]
MCU_HYPERBUS0_RESETn	Hyperbus Reset (active low) Output	O	R5
MCU_HYPERBUS0_RESETOn	Hyperbus Reset Status Indicator (active low) from Hyperbus Memory	I	R1
MCU_HYPERBUS0_RWDS	Hyperbus Read-Write Data Strobe	IO	U2
MCU_HYPERBUS0_WPn	Hyperbus Write Protect (Not in use)	O	N3
MCU_HYPERBUS0_CSn0	Hyperbus Chip Select 0	O	R4
MCU_HYPERBUS0_CSn1	Hyperbus Chip Select 1	O	N3
MCU_HYPERBUS0_DQ0	Hyperbus Data 0	IO	U4
MCU_HYPERBUS0_DQ1	Hyperbus Data 1	IO	U5
MCU_HYPERBUS0_DQ2	Hyperbus Data 2	IO	T2
MCU_HYPERBUS0_DQ3	Hyperbus Data 3	IO	T3
MCU_HYPERBUS0_DQ4	Hyperbus Data 4	IO	T4
MCU_HYPERBUS0_DQ5	Hyperbus Data 5	IO	T5
MCU_HYPERBUS0_DQ6	Hyperbus Data 6	IO	R2
MCU_HYPERBUS0_DQ7	Hyperbus Data 7	IO	R3

5.3.13 I2C

5.3.13.1 MAIN Domain

Table 5-29. I2C0 Signal Descriptions

SIGNAL NAME [1]	DESCRIPTION [2]	PIN TYPE [3]	BALL [4]
I2C0_SCL	I2C Clock	IOD	D20
I2C0_SDA	I2C Data	IOD	C21

Table 5-30. I2C1 Signal Descriptions

SIGNAL NAME [1]	DESCRIPTION [2]	PIN TYPE [3]	BALL [4]
I2C1_SCL	I2C Clock	IOD	B21
I2C1_SDA	I2C Data	IOD	E21

Table 5-31. I2C2 Signal Descriptions

SIGNAL NAME [1]	DESCRIPTION [2]	PIN TYPE [3]	BALL [4]
I2C2_SCL	I2C Clock	IOD	T27
I2C2_SDA	I2C Data	IOD	R25

Table 5-32. I2C3 Signal Descriptions

SIGNAL NAME [1]	DESCRIPTION [2]	PIN TYPE [3]	BALL [4]
I2C3_SCL	I2C Clock	IOD	AF13
I2C3_SDA	I2C Data	IOD	AG12

5.3.13.2 MCU Domain

Table 5-33. I2C0 Signal Descriptions

SIGNAL NAME [1]	DESCRIPTION [2]	PIN TYPE [3]	BALL [4]
MCU_I2C0_SCL	I2C Clock	IOD	AD8

Copyright © 2023 Texas Instruments Incorporated

Table 5-33. I2C0 Signal Descriptions (continued)

SIGNAL NAME [1]	DESCRIPTION [2]	PIN TYPE [3]	BALL [4]
MCU_I2C0_SDA	I2C Data	IOD	AD7

5.3.13.3 WKUP Domain

Table 5-34. I2C0 Signal Descriptions

SIGNAL NAME [1]	DESCRIPTION [2]	PIN TYPE [3]	BALL [4]
WKUP_I2C0_SCL	I2C Clock	IOD	AC7
WKUP_I2C0_SDA	I2C Data	IOD	AD6

5.3.14 MCAN

5.3.14.1 MCU Domain

Table 5-35. MCAN0 Signal Descriptions

SIGNAL NAME [1]	DESCRIPTION [2]	PIN TYPE [3]	BALL [4]
MCU_MCAN0_RX	MCAN Receive Data	I	W2
MCU_MCAN0_TX	MCAN Transmit Data	O	W1

Table 5-36. MCAN1 Signal Descriptions

SIGNAL NAME [1]	DESCRIPTION [2]	PIN TYPE [3]	BALL [4]
MCU_MCAN1_RX	MCAN Receive Data	I	AD3
MCU_MCAN1_TX	MCAN Transmit Data	O	AC3

5.3.15 MCASP

5.3.15.1 MAIN Domain

Table 5-37. MCASP0 Signal Descriptions

SIGNAL NAME [1]	DESCRIPTION [2]	PIN TYPE [3]	BALL [4]
MCASP0_ACLKR	MCASP Receive Bit Clock	IO	W24
MCASP0_ACLKX	MCASP Transmit Bit Clock	IO	V24
MCASP0_AFSR	MCASP Receive Frame Sync	IO	AA27
MCASP0_AFSX	MCASP Transmit Frame Sync	IO	W25
MCASP0_AHCLKR	MCASP Receive Master Clock	IO	AA25
MCASP0_AHCLKX	MCASP Transmit Master Clock	IO	U23
MCASP0_AXR0	MCASP Serial Data (Input/Output)	IO	Y24
MCASP0_AXR1	MCASP Serial Data (Input/Output)	IO	V28
MCASP0_AXR2	MCASP Serial Data (Input/Output)	IO	Y25
MCASP0_AXR3	MCASP Serial Data (Input/Output)	IO	U27
MCASP0_AXR4	MCASP Serial Data (Input/Output)	IO	V27
MCASP0_AXR5	MCASP Serial Data (Input/Output)	IO	V26
MCASP0_AXR6	MCASP Serial Data (Input/Output)	IO	U25
MCASP0_AXR7	MCASP Serial Data (Input/Output)	IO	AB25
MCASP0_AXR8	MCASP Serial Data (Input/Output)	IO	AD27
MCASP0_AXR9	MCASP Serial Data (Input/Output)	IO	AC26
MCASP0_AXR10	MCASP Serial Data (Input/Output)	IO	AD26
MCASP0_AXR11	MCASP Serial Data (Input/Output)	IO	AA24

Copyright © 2023 Texas Instruments Incorporated

Table 5-37. MCASP0 Signal Descriptions (continued)

SIGNAL NAME [1]	DESCRIPTION [2]	PIN TYPE [3]	BALL [4]
MCASP0_AXR12	MCASP Serial Data (Input/Output)	IO	AD28
MCASP0_AXR13	MCASP Serial Data (Input/Output)	IO	U26
MCASP0_AXR14	MCASP Serial Data (Input/Output)	IO	V25
MCASP0_AXR15	MCASP Serial Data (Input/Output)	IO	U24

Table 5-38. MCASP1 Signal Descriptions

SIGNAL NAME [1]	DESCRIPTION [2]	PIN TYPE [3]	BALL [4]
MCASP1_ACLKR	MCASP Receive Bit Clock	IO	AC27
MCASP1_ACLKX	MCASP Transmit Bit Clock	IO	AB28
MCASP1_AFSR	MCASP Receive Frame Sync	IO	AB26
MCASP1_AFSX	MCASP Transmit Frame Sync	IO	AC28
MCASP1_AHCLKR	MCASP Receive Master Clock	IO	AD28
MCASP1_AHCLKX	MCASP Transmit Master Clock	IO	U26
MCASP1_AXR0	MCASP Serial Data (Input/Output)	IO	AA25
MCASP1_AXR1	MCASP Serial Data (Input/Output)	IO	U23
MCASP1_AXR2	MCASP Serial Data (Input/Output)	IO	AB27
MCASP1_AXR3	MCASP Serial Data (Input/Output)	IO	W28
MCASP1_AXR4	MCASP Serial Data (Input/Output)	IO	W27
MCASP1_AXR5	MCASP Serial Data (Input/Output)	IO	Y28
MCASP1_AXR6	MCASP Serial Data (Input/Output)	IO	AA28
MCASP1_AXR7	MCASP Serial Data (Input/Output)	IO	AB24
MCASP1_AXR8	MCASP Serial Data (Input/Output)	IO	AC25
MCASP1_AXR9	MCASP Serial Data (Input/Output)	IO	AD25

Table 5-39. MCASP2 Signal Descriptions

SIGNAL NAME [1]	DESCRIPTION [2]	PIN TYPE [3]	BALL [4]
MCASP2_ACLKR	MCASP Receive Bit Clock	IO	AE27
MCASP2_ACLKX	MCASP Transmit Bit Clock	IO	W26
MCASP2_AFSR	MCASP Receive Frame Sync	IO	AD24
MCASP2_AFSX	MCASP Transmit Frame Sync	IO	Y26
MCASP2_AHCLKR	MCASP Receive Master Clock	IO	V25
MCASP2_AHCLKX	MCASP Transmit Master Clock	IO	U24
MCASP2_AXR0	MCASP Serial Data (Input/Output)	IO	AC24
MCASP2_AXR1	MCASP Serial Data (Input/Output)	IO	Y27
MCASP2_AXR2	MCASP Serial Data (Input/Output)	IO	AE26
MCASP2_AXR3	MCASP Serial Data (Input/Output)	IO	AE28

5.3.16 MCSPI

5.3.16.1 MAIN Domain

Table 5-40. MCSPI0 Signal Descriptions

SIGNAL NAME [1]	DESCRIPTION [2]	PIN TYPE [3]	BALL [4]
SPI0_CLK	SPI Clock	IO	AH13
SPI0_CS0	SPI Chip Select 0	IO	AG13

Copyright © 2023 Texas Instruments Incorporated

Table 5-40. MCSPI0 Signal Descriptions (continued)

SIGNAL NAME [1]	DESCRIPTION [2]	PIN TYPE [3]	BALL [4]
SPI0_CS1	SPI Chip Select 1	IO	AF13
SPI0_CS2	SPI Chip Select 2	IO	AG11
SPI0_CS3	SPI Chip Select 3	IO	AD11
SPI0_D0	SPI Data 0	IO	AE13
SPI0_D1	SPI Data 1	IO	AD13

Table 5-41. MCSPI1 Signal Descriptions

SIGNAL NAME [1]	DESCRIPTION [2]	PIN TYPE [3]	BALL [4]
SPI1_CLK	SPI Clock	IO	AH12
SPI1_CS0	SPI Chip Select 0	IO	AD12
SPI1_CS1	SPI Chip Select 1	IO	AG12
SPI1_CS2	SPI Chip Select 2	IO	AD18
SPI1_CS3	SPI Chip Select 3	IO	AH18
SPI1_D0	SPI Data 0	IO	AE12
SPI1_D1	SPI Data 1	IO	AF12

Table 5-42. MCSPI2 Signal Descriptions

SIGNAL NAME [1]	DESCRIPTION [2]	PIN TYPE [3]	BALL [4]
SPI2_CLK	SPI Clock	IO	AE23
SPI2_CS0	SPI Chip Select 0	IO	AD23
SPI2_CS1	SPI Chip Select 1	IO	AF26
SPI2_CS2	SPI Chip Select 2	IO	AH25
SPI2_CS3	SPI Chip Select 3	IO	AF24
SPI2_D0	SPI Data 0	IO	AD22
SPI2_D1	SPI Data 1	IO	AC21

Table 5-43. MCSPI3 Signal Descriptions

SIGNAL NAME [1]	DESCRIPTION [2]	PIN TYPE [3]	BALL [4]
SPI3_CLK	SPI Clock	IO	Y27
SPI3_CS0	SPI Chip Select 0	IO	W28
SPI3_CS1	SPI Chip Select 1	IO	V26
SPI3_CS2	SPI Chip Select 2	IO	U25
SPI3_CS3	SPI Chip Select 3	IO	Y28
SPI3_D0	SPI Data 0	IO	Y26
SPI3_D1	SPI Data 1	IO	W26

5.3.16.2 MCU Domain

Table 5-44. MCSPI0 Signal Descriptions

SIGNAL NAME [1]	DESCRIPTION [2]	PIN TYPE [3]	BALL [4]
MCU_SPI0_CLK	SPI Clock	IO	Y1
MCU_SPI0_CS0	SPI Chip Select 0	IO	Y4
MCU_SPI0_CS1	SPI Chip Select 1	IO	P1
MCU_SPI0_CS2	SPI Chip Select 2	IO	N3

Copyright © 2023 Texas Instruments Incorporated

Table 5-44. MCSPI0 Signal Descriptions (continued)

SIGNAL NAME [1]	DESCRIPTION [2]	PIN TYPE [3]	BALL [4]
MCU_SPI0_CS3	SPI Chip Select 3	IO	AC3
MCU_SPI0_D0	SPI Data 0	IO	Y3
MCU_SPI0_D1	SPI Data 1	IO	Y2

Table 5-45. MCSPI1 Signal Descriptions

SIGNAL NAME [1]	DESCRIPTION [2]	PIN TYPE [3]	BALL [4]
MCU_SPI1_CLK	SPI Clock	IO	AF4
MCU_SPI1_CS0	SPI Chip Select 0	IO	AD1
MCU_SPI1_CS1	SPI Chip Select 1	IO	P4
MCU_SPI1_CS2	SPI Chip Select 2	IO	P5
MCU_SPI1_CS3	SPI Chip Select 3	IO	AD3
MCU_SPI1_D0	SPI Data 0	IO	AF3
MCU_SPI1_D1	SPI Data 1	IO	AE3

5.3.17 MMCSD

5.3.17.1 MAIN Domain

Table 5-46. MMCSD0 Signal Descriptions

SIGNAL NAME[1]	DESCRIPTION[2]	PIN TYPE [3]	BALL [4]
MMC0_CLK(1) (2)	MMC/SD Clock	O	B25
MMC0_CMD(1) (2)	MMC/SD Command	IO	B27
MMC0_DS	MMC Data Strobe	I	C25
MMC0_SDCD	SD Card Detect (active low)	I	A23
MMC0_SDWP	SD Write Protect	I	B23
MMC0_DAT0(1) (2)	MMC/SD Data	IO	A26
MMC0_DAT1(1) (2)	MMC/SD Data	IO	E25
MMC0_DAT2(1) (2)	MMC/SD Data	IO	C26
MMC0_DAT3(1) (2)	MMC/SD Data	IO	A25
MMC0_DAT4(1) (2)	MMC/SD Data	IO	E24
MMC0_DAT5(1) (2)	MMC/SD Data	IO	A24
MMC0_DAT6(1) (2)	MMC/SD Data	IO	B26
MMC0_DAT7(1) (2)	MMC/SD Data	IO	D25

(1) When MMCSD0 or MMCSD1 is used, any non-MMC signal function multiplexed with the respective pins are not available. This is due to the MMC having an internal IO multiplexer which is controlled by MMCSD0/1_SS_PHY_CTRL_1_REG[31] IOMUX_ENABLE. This internal IO multiplexer is primary for the signal functions associated with MMCSD pins, and the PADCONFIG's MUXMODE is secondary. Additionally, the internal IO multiplexer affects all of the MMCSD0 or MMCSD1 pins, regardless of configured data bus width. Therefore, when MMCSD0/1_SS_PHY_CTRL_1_REG[31] IOMUX_ENABLE = 0, the respective MMCSD pins are configured for eMMC/SD functionality, regardless of the PADCONFIG [MUXMODE] setting.
(2) Each of these signals should have an external 50kΩ pull-up resistor connected to the corresponding power supply.

Table 5-47. MMCSD1 Signal Descriptions

SIGNAL NAME [1]	DESCRIPTION [2]	PIN TYPE [3]	BALL [4]
MMC1_CLK(1) (2)	MMC/SD Clock	O	C27
MMC1_CMD(1) (2)	MMC/SD Command	IO	C28
MMC1_SDCD	SD Card Detect (active low)	I	B24
MMC1_SDWP	SD Write Protect	I	C24

Copyright © 2023 Texas Instruments Incorporated

Table 5-47. MMCSD1 Signal Descriptions (continued)

SIGNAL NAME [1]	DESCRIPTION [2]	PIN TYPE [3]	BALL [4]
MMC1_DAT0(1) (2)	MMC/SD Data	IO	D28
MMC1_DAT1(1) (2)	MMC/SD Data	IO	E27
MMC1_DAT2(1) (2)	MMC/SD Data	IO	D26
MMC1_DAT3(1) (2)	MMC/SD Data	IO	D27

(1) When MMCSD0 or MMCSD1 is used, any non-MMC signal function multiplexed with the respective pins are not available. This is due to the MMC having an internal IO multiplexer which is controlled by MMCSD0/1_SS_PHY_CTRL_1_REG[31] IOMUX_ENABLE. This internal IO multiplexer is primary for the signal functions associated with MMCSD pins, and the PADCONFIG's MUXMODE is secondary. Additionally, the internal IO multiplexer affects all of the MMCSD0 or MMCSD1 pins, regardless of configured data bus width. Therefore, when MMCSD0/1_SS_PHY_CTRL_1_REG[31] IOMUX_ENABLE = 0, the respective MMCSD pins are configured for eMMC/SD functionality, regardless of the PADCONFIG [MUXMODE] setting.
(2) Each of these signals should have an external 50kΩ pull-up resistor connected to the corresponding power supply.

5.3.18 CPTS

Note

Some CPTS signals are connected directly to CPTS modules within the device. Other CPTS signals are connected to the Time Sync Router and fanned out to peripherals linked to the router. Input signals are sent to the peripherals while output signals are sourced from the peripherals. For more information, see the Time Sync and Compare Events section in the Time Sync chapter in the device TRM.

5.3.18.1 MCU Domain

Table 5-48. CPTS0 Signal Descriptions

SIGNAL NAME [1]	DESCRIPTION [2]	PIN TYPE [3]	BALL [4]
MCU_CPTS0_RFT_CLK	CPTS Reference Clock	I	AB3
MCU_CPTS0_TS_COMP	CPTS Time Stamp Counter Compare from MCU_CPSW0_CPTS0	O	AB4
MCU_CPTS0_TS_SYNC	CPTS Time Stamp Counter Bit from MCU_CPSW0_CPTS0	O	AC5
MCU_CPTS0_HW1TSPUSH	CPTS Hardware Time Stamp Push 1 input to Time Sync Router and MCU_CPSW0_CPTS0	I	AC2
MCU_CPTS0_HW2TSPUSH	CPTS Hardware Time Stamp Push 2 input to Time Sync Router and MCU_CPSW0_CPTS0	I	AC1

5.3.18.2 MAIN Domain

Table 5-49. CPTS0 Signal Descriptions

SIGNAL NAME [1]	DESCRIPTION [2]	PIN TYPE [3]	BALL [4]
CPTS0_RFT_CLK	CPTS Reference Clock	I	D21
CPTS0_TS_COMP	CPTS Time Stamp Counter Compare from NAVSS0_CPTS0	O	AF13
CPTS0_TS_SYNC	CPTS Time Stamp Counter Bit from NAVSS0_CPTS0	O	AG12
CPTS0_HW1TSPUSH	CPTS Hardware Time Stamp Push 1 input to Time Sync Router	I	B21
CPTS0_HW2TSPUSH	CPTS Hardware Time Stamp Push 2 input to Time Sync Router	I	E21
SYNC0_OUT	CPTS Time Stamp Generator Bit 0 from Time Sync Router	O	D21
SYNC1_OUT	CPTS Time Stamp Generator Bit 1 from Time Sync Router	O	A22

Copyright © 2023 Texas Instruments Incorporated

Table 5-49. CPTS0 Signal Descriptions (continued)

SIGNAL NAME [1]	DESCRIPTION [2]	PIN TYPE [3]	BALL [4]
SYNC2_OUT	CPTS Time Stamp Generator Bit 2 from Time Sync Router	O	AE18
SYNC3_OUT	CPTS Time Stamp Generator Bit 3 from Time Sync Router	O	AH17

5.3.19 OLDI

5.3.19.1 MAIN Domain

Table 5-50. OLDI0 Signal Descriptions

SIGNAL NAME [1]	DESCRIPTION [2]	PIN TYPE [3]	BALL [4]
OLDI0_CLKN	OLDI Differential Clock (negative)	IO	L25
OLDI0_CLKP	OLDI Differential Clock (positive)	IO	K25
OLDI0_A0N	OLDI Differential Data (negative)	IO	J28
OLDI0_A0P	OLDI Differential Data (positive)	IO	K28
OLDI0_A1N	OLDI Differential Data (negative)	IO	L27
OLDI0_A1P	OLDI Differential Data (positive)	IO	K27
OLDI0_A2N	OLDI Differential Data (negative)	IO	K24
OLDI0_A2P	OLDI Differential Data (positive)	IO	J24
OLDI0_A3N	OLDI Differential Data (negative)	IO	J26
OLDI0_A3P	OLDI Differential Data (positive)	IO	K26

Copyright © 2023 Texas Instruments Incorporated

5.3.20 OSPI

5.3.20.1 MCU Domain

Table 5-51. OSPI0 Signal Descriptions

SIGNAL NAME [1]	DESCRIPTION [2]	PIN TYPE [3]	BALL [4]
MCU_OSPI0_CLK	OSPI Clock	O	V1
MCU_OSPI0_DQS	OSPI Data Strobe (DQS) or Loopback Clock Input	I	U2
MCU_OSPI0_LBCLKO	OSPI Loopback Clock Output	IO	U1
MCU_OSPI0_CSn0	OSPI Chip Select 0 (active low)	O	R4
MCU_OSPI0_CSn1	OSPI Chip Select 1 (active low)	O	R5
MCU_OSPI0_CSn2	OSPI Chip Select 2 (active low)	O	R1
MCU_OSPI0_CSn3	OSPI Chip Select 3 (active low)	O	P2
MCU_OSPI0_D0	OSPI Data 0	IO	U4
MCU_OSPI0_D1	OSPI Data 1	IO	U5
MCU_OSPI0_D2	OSPI Data 2	IO	T2
MCU_OSPI0_D3	OSPI Data 3	IO	T3
MCU_OSPI0_D4	OSPI Data 4	IO	T4
MCU_OSPI0_D5	OSPI Data 5	IO	T5
MCU_OSPI0_D6	OSPI Data 6	IO	R2
MCU_OSPI0_D7	OSPI Data 7	IO	R3

Table 5-52. OSPI1 Signal Descriptions

SIGNAL NAME [1]	DESCRIPTION [2]	PIN TYPE [3]	BALL [4]
MCU_OSPI1_CLK	OSPI Clock	O	T1
MCU_OSPI1_DQS	OSPI Data Strobe (DQS) or Loopback Clock Input	I	P2
MCU_OSPI1_LBCLKO	OSPI Loopback Clock Output	IO	R1
MCU_OSPI1_CSn0	OSPI Chip Select 0 (active low)	O	N2
MCU_OSPI1_CSn1	OSPI Chip Select 1 (active low)	O	N3
MCU_OSPI1_D0	OSPI Data 0	IO	P3
MCU_OSPI1_D1	OSPI Data 1	IO	P4
MCU_OSPI1_D2	OSPI Data 2	IO	P5
MCU_OSPI1_D3	OSPI Data 3	IO	P1

Copyright © 2023 Texas Instruments Incorporated

5.3.21 PRU_ICSSG

5.3.21.1 MAIN Domain

Note

The PRU_ICSSG contains a second layer of multiplexing to enable additional functionality on the PRU GPO and GPI signals. This internal wrapper multiplexing is described in the PRU_ICSSG chapter in the device TRM.

Table 5-53. PRU_ICSSG0 Signal Descriptions

SIGNAL NAME [1]	DESCRIPTION [2]	PIN TYPE [3]	BALL [4]
PRG0_ECAP0_IN_APWM_OUT	PRU_ICSSG Enhanced Capture (ECAP) Input or Auxiliary PWM (APWM) Ouput	IO	V25
PRG0_ECAP0_SYNC_IN	PRU_ICSSG ECAP Sync Input	I	U27
PRG0_ECAP0_SYNC_OUT	PRU_ICSSG ECAP Sync Output	O	U26
PRG0_IEP0_EDIO_OUTVALID	PRU_ICSSG Industrial Ethernet Digital I/O Outvalid	O	AD12
PRG0_IEP0_EDC_LATCH_IN0	PRU_ICSSG Industrial Ethernet Distributed Clock Latch Input	I	V25
PRG0_IEP0_EDC_LATCH_IN1	PRU_ICSSG Industrial Ethernet Distributed Clock Latch Input	I	U27
PRG0_IEP0_EDC_SYNC_OUT0	PRU_ICSSG Industrial Ethernet Distributed Clock Sync Output	O	U24
PRG0_IEP0_EDC_SYNC_OUT1	PRU_ICSSG Industrial Ethernet Distributed Clock Sync Output	O	U26
PRG0_IEP0_EDIO_DATA_IN_OUT28	PRU_ICSSG Industrial Ethernet Digital I/O Data Input/ Output	IO	V26
PRG0_IEP0_EDIO_DATA_IN_OUT29	PRU_ICSSG Industrial Ethernet Digital I/O Data Input/ Output	IO	U25
PRG0_IEP0_EDIO_DATA_IN_OUT30	PRU_ICSSG Industrial Ethernet Digital I/O Data Input/ Output	IO	Y28
PRG0_IEP0_EDIO_DATA_IN_OUT31	PRU_ICSSG Industrial Ethernet Digital I/O Data Input/ Output	IO	AA28
PRG0_IEP1_EDC_LATCH_IN0	PRU_ICSSG Industrial Ethernet Distributed Clock Latch Input	I	Y26
PRG0_IEP1_EDC_LATCH_IN1	PRU_ICSSG Industrial Ethernet Distributed Clock Latch Input	I	W28
PRG0_IEP1_EDC_SYNC_OUT0	PRU_ICSSG Industrial Ethernet Distributed Clock Sync Output	O	W26
PRG0_IEP1_EDC_SYNC_OUT1	PRU_ICSSG Industrial Ethernet Distributed Clock Sync Output	O	Y27
PRG0_MDIO0_MDC	PRU_ICSSG MDIO Clock	O	AE28
PRG0_MDIO0_MDIO	PRU_ICSSG MDIO Data	IO	AE26
PRG0_PRU0_GPI0	PRU_ICSSG PRU Data Input	I	V24
PRG0_PRU0_GPI1	PRU_ICSSG PRU Data Input	I	W25
PRG0_PRU0_GPI2	PRU_ICSSG PRU Data Input	I	W24
PRG0_PRU0_GPI3	PRU_ICSSG PRU Data Input	I	AA27
PRG0_PRU0_GPI4	PRU_ICSSG PRU Data Input	I	Y24
PRG0_PRU0_GPI5	PRU_ICSSG PRU Data Input	I	V28
PRG0_PRU0_GPI6	PRU_ICSSG PRU Data Input	I	Y25
PRG0_PRU0_GPI7	PRU_ICSSG PRU Data Input	I	U27
PRG0_PRU0_GPI8	PRU_ICSSG PRU Data Input	I	V27
PRG0_PRU0_GPI9	PRU_ICSSG PRU Data Input	I	V26

Copyright © 2023 Texas Instruments Incorporated

Table 5-53. PRU_ICSSG0 Signal Descriptions (continued)

SIGNAL NAME [1]	DESCRIPTION [2]	PIN TYPE [3]	BALL [4]
PRG0_PRU0_GPI10	PRU_ICSSG PRU Data Input	I	U25
PRG0_PRU0_GPI11	PRU_ICSSG PRU Data Input	I	AB25
PRG0_PRU0_GPI12	PRU_ICSSG PRU Data Input	I	AD27
PRG0_PRU0_GPI13	PRU_ICSSG PRU Data Input	I	AC26
PRG0_PRU0_GPI14	PRU_ICSSG PRU Data Input	I	AD26
PRG0_PRU0_GPI15	PRU_ICSSG PRU Data Input	I	AA24
PRG0_PRU0_GPI16	PRU_ICSSG PRU Data Input	I	AD28
PRG0_PRU0_GPI17	PRU_ICSSG PRU Data Input	I	U26
PRG0_PRU0_GPI18	PRU_ICSSG PRU Data Input	I	V25
PRG0_PRU0_GPI19	PRU_ICSSG PRU Data Input	I	U24
PRG0_PRU0_GPO0	PRU_ICSSG PRU Data Output	IO	V24
PRG0_PRU0_GPO1	PRU_ICSSG PRU Data Output	IO	W25
PRG0_PRU0_GPO2	PRU_ICSSG PRU Data Output	IO	W24
PRG0_PRU0_GPO3	PRU_ICSSG PRU Data Output	IO	AA27
PRG0_PRU0_GPO4	PRU_ICSSG PRU Data Output	IO	Y24
PRG0_PRU0_GPO5	PRU_ICSSG PRU Data Output	IO	V28
PRG0_PRU0_GPO6	PRU_ICSSG PRU Data Output	IO	Y25
PRG0_PRU0_GPO7	PRU_ICSSG PRU Data Output	IO	U27
PRG0_PRU0_GPO8	PRU_ICSSG PRU Data Output	IO	V27
PRG0_PRU0_GPO9	PRU_ICSSG PRU Data Output	IO	V26
PRG0_PRU0_GPO10	PRU_ICSSG PRU Data Output	IO	U25
PRG0_PRU0_GPO11	PRU_ICSSG PRU Data Output	IO	AB25, AD27
PRG0_PRU0_GPO12	PRU_ICSSG PRU Data Output	IO	AC26, AD27
PRG0_PRU0_GPO13	PRU_ICSSG PRU Data Output	IO	AC26, AD26
PRG0_PRU0_GPO14	PRU_ICSSG PRU Data Output	IO	AA24, AD26
PRG0_PRU0_GPO15	PRU_ICSSG PRU Data Output	IO	AA24, AB25
PRG0_PRU0_GPO16	PRU_ICSSG PRU Data Output	IO	AD28
PRG0_PRU0_GPO17	PRU_ICSSG PRU Data Output	IO	U26
PRG0_PRU0_GPO18	PRU_ICSSG PRU Data Output	IO	V25
PRG0_PRU0_GPO19	PRU_ICSSG PRU Data Output	IO	U24
PRG0_PRU1_GPI0	PRU_ICSSG PRU Data Input	I	AB28
PRG0_PRU1_GPI1	PRU_ICSSG PRU Data Input	I	AC28
PRG0_PRU1_GPI2	PRU_ICSSG PRU Data Input	I	AC27
PRG0_PRU1_GPI3	PRU_ICSSG PRU Data Input	I	AB26
PRG0_PRU1_GPI4	PRU_ICSSG PRU Data Input	I	AA25
PRG0_PRU1_GPI5	PRU_ICSSG PRU Data Input	I	U23
PRG0_PRU1_GPI6	PRU_ICSSG PRU Data Input	I	AB27
PRG0_PRU1_GPI7	PRU_ICSSG PRU Data Input	I	W28
PRG0_PRU1_GPI8	PRU_ICSSG PRU Data Input	I	W27
PRG0_PRU1_GPI9	PRU_ICSSG PRU Data Input	I	Y28
PRG0_PRU1_GPI10	PRU_ICSSG PRU Data Input	I	AA28
PRG0_PRU1_GPI11	PRU_ICSSG PRU Data Input	I	AB24
PRG0_PRU1_GPI12	PRU_ICSSG PRU Data Input	I	AC25
PRG0_PRU1_GPI13	PRU_ICSSG PRU Data Input	I	AD25
PRG0_PRU1_GPI14	PRU_ICSSG PRU Data Input	I	AD24

Copyright © 2023 Texas Instruments Incorporated

Table 5-53. PRU_ICSSG0 Signal Descriptions (continued)

SIGNAL NAME [1]	DESCRIPTION [2]	PIN TYPE [3]	BALL [4]
PRG0_PRU1_GPI15	PRU_ICSSG PRU Data Input	I	AE27
PRG0_PRU1_GPI16	PRU_ICSSG PRU Data Input	I	AC24
PRG0_PRU1_GPI17	PRU_ICSSG PRU Data Input	I	Y27
PRG0_PRU1_GPI18	PRU_ICSSG PRU Data Input	I	Y26
PRG0_PRU1_GPI19	PRU_ICSSG PRU Data Input	I	W26
PRG0_PRU1_GPO0	PRU_ICSSG PRU Data Output	IO	AB28
PRG0_PRU1_GPO1	PRU_ICSSG PRU Data Output	IO	AC28
PRG0_PRU1_GPO2	PRU_ICSSG PRU Data Output	IO	AC27
PRG0_PRU1_GPO3	PRU_ICSSG PRU Data Output	IO	AB26
PRG0_PRU1_GPO4	PRU_ICSSG PRU Data Output	IO	AA25
PRG0_PRU1_GPO5	PRU_ICSSG PRU Data Output	IO	U23
PRG0_PRU1_GPO6	PRU_ICSSG PRU Data Output	IO	AB27
PRG0_PRU1_GPO7	PRU_ICSSG PRU Data Output	IO	W28
PRG0_PRU1_GPO8	PRU_ICSSG PRU Data Output	IO	W27
PRG0_PRU1_GPO9	PRU_ICSSG PRU Data Output	IO	Y28
PRG0_PRU1_GPO10	PRU_ICSSG PRU Data Output	IO	AA28
PRG0_PRU1_GPO11	PRU_ICSSG PRU Data Output	IO	AB24, AC25
PRG0_PRU1_GPO12	PRU_ICSSG PRU Data Output	IO	AC25, AD25
PRG0_PRU1_GPO13	PRU_ICSSG PRU Data Output	IO	AD24, AD25
PRG0_PRU1_GPO14	PRU_ICSSG PRU Data Output	IO	AD24, AE27
PRG0_PRU1_GPO15	PRU_ICSSG PRU Data Output	IO	AB24, AE27
PRG0_PRU1_GPO16	PRU_ICSSG PRU Data Output	IO	AC24
PRG0_PRU1_GPO17	PRU_ICSSG PRU Data Output	IO	Y27
PRG0_PRU1_GPO18	PRU_ICSSG PRU Data Output	IO	Y26
PRG0_PRU1_GPO19	PRU_ICSSG PRU Data Output	IO	W26
PRG0_PWM0_TZ_IN	PRU_ICSSG PWM Trip Zone Input	I	V25
PRG0_PWM0_TZ_OUT	PRU_ICSSG PWM Trip Zone Output	O	U24
PRG0_PWM1_TZ_IN	PRU_ICSSG PWM Trip Zone Input	I	Y26
PRG0_PWM1_TZ_OUT	PRU_ICSSG PWM Trip Zone Output	O	W26
PRG0_PWM2_TZ_IN	PRU_ICSSG PWM Trip Zone Input	I	AA28
PRG0_PWM2_TZ_OUT	PRU_ICSSG PWM Trip Zone Output	O	W27
PRG0_PWM3_TZ_IN	PRU_ICSSG PWM Trip Zone Input	I	V26
PRG0_PWM3_TZ_OUT	PRU_ICSSG PWM Trip Zone Output	O	AB25
PRG0_PWM0_A0	PRU_ICSSG PWM Output A	IO	AD27
PRG0_PWM0_A1	PRU_ICSSG PWM Output A	IO	AD26
PRG0_PWM0_A2	PRU_ICSSG PWM Output A	IO	AD28
PRG0_PWM0_B0	PRU_ICSSG PWM Output B	IO	AC26
PRG0_PWM0_B1	PRU_ICSSG PWM Output B	IO	AA24
PRG0_PWM0_B2	PRU_ICSSG PWM Output B	IO	U26
PRG0_PWM1_A0	PRU_ICSSG PWM Output A	IO	AC25
PRG0_PWM1_A1	PRU_ICSSG PWM Output A	IO	AD24
PRG0_PWM1_A2	PRU_ICSSG PWM Output A	IO	AC24
PRG0_PWM1_B0	PRU_ICSSG PWM Output B	IO	AD25
PRG0_PWM1_B1	PRU_ICSSG PWM Output B	IO	AE27
PRG0_PWM1_B2	PRU_ICSSG PWM Output B	IO	Y27

Copyright © 2023 Texas Instruments Incorporated

Table 5-53. PRU_ICSSG0 Signal Descriptions (continued)

SIGNAL NAME [1]	DESCRIPTION [2]	PIN TYPE [3]	BALL [4]
PRG0_PWM2_A0	PRU_ICSSG PWM Output A	IO	W24
PRG0_PWM2_A1	PRU_ICSSG PWM Output A	IO	V27
PRG0_PWM2_A2	PRU_ICSSG PWM Output A	IO	AC27
PRG0_PWM2_B0	PRU_ICSSG PWM Output B	IO	Y24
PRG0_PWM2_B1	PRU_ICSSG PWM Output B	IO	U25
PRG0_PWM2_B2	PRU_ICSSG PWM Output B	IO	AA25
PRG0_PWM3_A0	PRU_ICSSG PWM Output A	IO	V24
PRG0_PWM3_A1	PRU_ICSSG PWM Output A	IO	Y25
PRG0_PWM3_A2	PRU_ICSSG PWM Output A	IO	AA27
PRG0_PWM3_B0	PRU_ICSSG PWM Output B	IO	W25
PRG0_PWM3_B1	PRU_ICSSG PWM Output B	IO	U27
PRG0_PWM3_B2	PRU_ICSSG PWM Output B	IO	V28
PRG0_RGMII1_RXC	PRU_ICSSG RGMII Receive Clock	I	Y25
PRG0_RGMII1_RX_CTL	PRU_ICSSG RGMII Receive Control	I	Y24
PRG0_RGMII1_TXC	PRU_ICSSG RGMII Transmit Clock	IO	AD28
PRG0_RGMII1_TX_CTL	PRU_ICSSG RGMII Transmit Control	O	AB25
PRG0_RGMII2_RXC	PRU_ICSSG RGMII Receive Clock	I	AB27
PRG0_RGMII2_RX_CTL	PRU_ICSSG RGMII Receive Control	I	AA25
PRG0_RGMII2_TXC	PRU_ICSSG RGMII Transmit Clock	IO	AC24
PRG0_RGMII2_TX_CTL	PRU_ICSSG RGMII Transmit Control	O	AB24
PRG0_RGMII1_RD0	PRU_ICSSG RGMII Receive Data	I	V24
PRG0_RGMII1_RD1	PRU_ICSSG RGMII Receive Data	I	W25
PRG0_RGMII1_RD2	PRU_ICSSG RGMII Receive Data	I	W24
PRG0_RGMII1_RD3	PRU_ICSSG RGMII Receive Data	I	AA27
PRG0_RGMII1_TD0	PRU_ICSSG RGMII Transmit Data	O	AD27
PRG0_RGMII1_TD1	PRU_ICSSG RGMII Transmit Data	O	AC26
PRG0_RGMII1_TD2	PRU_ICSSG RGMII Transmit Data	O	AD26
PRG0_RGMII1_TD3	PRU_ICSSG RGMII Transmit Data	O	AA24
PRG0_RGMII2_RD0	PRU_ICSSG RGMII Receive Data	I	AB28
PRG0_RGMII2_RD1	PRU_ICSSG RGMII Receive Data	I	AC28
PRG0_RGMII2_RD2	PRU_ICSSG RGMII Receive Data	I	AC27
PRG0_RGMII2_RD3	PRU_ICSSG RGMII Receive Data	I	AB26
PRG0_RGMII2_TD0	PRU_ICSSG RGMII Transmit Data	O	AC25
PRG0_RGMII2_TD1	PRU_ICSSG RGMII Transmit Data	O	AD25
PRG0_RGMII2_TD2	PRU_ICSSG RGMII Transmit Data	O	AD24
PRG0_RGMII2_TD3	PRU_ICSSG RGMII Transmit Data	O	AE27
PRG0_UART0_CTSn	PRU_ICSSG UART Clear to Send (active low)	I	V26
PRG0_UART0_RTSn	PRU_ICSSG UART Request to Send (active low)	O	U25
PRG0_UART0_RXD	PRU_ICSSG UART Receive Data	I	Y28
PRG0_UART0_TXD	PRU_ICSSG UART Transmit Data	O	AA28

Table 5-54. PRU_ICSSG1 Signal Descriptions

SIGNAL NAME [1]	DESCRIPTION [2]	PIN TYPE [3]	BALL [4]
PRG1_ECAP0_IN_APWM_OUT	PRU_ICSSG Enhanced Capture (ECAP) Input or Auxiliary PWM (APWM) Ouput	IO	AC21

Copyright © 2023 Texas Instruments Incorporated

Table 5-54. PRU_ICSSG1 Signal Descriptions (continued)

SIGNAL NAME [1]	DESCRIPTION [2]	PIN TYPE [3]	BALL [4]
PRG1_ECAP0_SYNC_IN	PRU_ICSSG ECAP Sync Input	I	AD22
PRG1_ECAP0_SYNC_OUT	PRU_ICSSG ECAP Sync Output	O	AE23
PRG1_IEP0_EDIO_OUTVALID	PRU_ICSSG Industrial Ethernet Digital I/O Outvalid	O	AF13
PRG1_IEP0_EDC_LATCH_IN0	PRU_ICSSG Industrial Ethernet Distributed Clock Latch Input	I	AG25
PRG1_IEP0_EDC_LATCH_IN1	PRU_ICSSG Industrial Ethernet Distributed Clock Latch Input	I	AG27
PRG1_IEP0_EDC_SYNC_OUT0	PRU_ICSSG Industrial Ethernet Distributed Clock Sync Output	O	AG26
PRG1_IEP0_EDC_SYNC_OUT1	PRU_ICSSG Industrial Ethernet Distributed Clock Sync Output	O	AH26
PRG1_IEP0_EDIO_DATA_IN_OUT28	PRU_ICSSG Industrial Ethernet Digital I/O Data Input/ Output	IO	AF26
PRG1_IEP0_EDIO_DATA_IN_OUT29	PRU_ICSSG Industrial Ethernet Digital I/O Data Input/ Output	IO	AH25
PRG1_IEP0_EDIO_DATA_IN_OUT30	PRU_ICSSG Industrial Ethernet Digital I/O Data Input/ Output	IO	AF25
PRG1_IEP0_EDIO_DATA_IN_OUT31	PRU_ICSSG Industrial Ethernet Digital I/O Data Input/ Output	IO	AF24
PRG1_IEP1_EDC_LATCH_IN0	PRU_ICSSG Industrial Ethernet Distributed Clock Latch Input	I	AD22
PRG1_IEP1_EDC_LATCH_IN1	PRU_ICSSG Industrial Ethernet Distributed Clock Latch Input	I	AD23
PRG1_IEP1_EDC_SYNC_OUT0	PRU_ICSSG Industrial Ethernet Distributed Clock Sync Output	O	AC21
PRG1_IEP1_EDC_SYNC_OUT1	PRU_ICSSG Industrial Ethernet Distributed Clock Sync Output	O	AE23
PRG1_MDIO0_MDC	PRU_ICSSG MDIO Clock	O	AH18
PRG1_MDIO0_MDIO	PRU_ICSSG MDIO Data	IO	AD18
PRG1_PRU0_GPI0	PRU_ICSSG PRU Data Input	I	AE22
PRG1_PRU0_GPI1	PRU_ICSSG PRU Data Input	I	AG24
PRG1_PRU0_GPI2	PRU_ICSSG PRU Data Input	I	AF23
PRG1_PRU0_GPI3	PRU_ICSSG PRU Data Input	I	AD21
PRG1_PRU0_GPI4	PRU_ICSSG PRU Data Input	I	AG23
PRG1_PRU0_GPI5	PRU_ICSSG PRU Data Input	I	AF27
PRG1_PRU0_GPI6	PRU_ICSSG PRU Data Input	I	AF22
PRG1_PRU0_GPI7	PRU_ICSSG PRU Data Input	I	AG27
PRG1_PRU0_GPI8	PRU_ICSSG PRU Data Input	I	AF28
PRG1_PRU0_GPI9	PRU_ICSSG PRU Data Input	I	AF26
PRG1_PRU0_GPI10	PRU_ICSSG PRU Data Input	I	AH25
PRG1_PRU0_GPI11	PRU_ICSSG PRU Data Input	I	AF21
PRG1_PRU0_GPI12	PRU_ICSSG PRU Data Input	I	AH20
PRG1_PRU0_GPI13	PRU_ICSSG PRU Data Input	I	AH21
PRG1_PRU0_GPI14	PRU_ICSSG PRU Data Input	I	AG20
PRG1_PRU0_GPI15	PRU_ICSSG PRU Data Input	I	AD19
PRG1_PRU0_GPI16	PRU_ICSSG PRU Data Input	I	AD20
PRG1_PRU0_GPI17	PRU_ICSSG PRU Data Input	I	AH26
PRG1_PRU0_GPI18	PRU_ICSSG PRU Data Input	I	AG25

Copyright © 2023 Texas Instruments Incorporated

Table 5-54. PRU_ICSSG1 Signal Descriptions (continued)

SIGNAL NAME [1]	DESCRIPTION [2]	PIN TYPE [3]	BALL [4]
PRG1_PRU0_GPI19	PRU_ICSSG PRU Data Input	I	AG26
PRG1_PRU0_GPO0	PRU_ICSSG PRU Data Output	IO	AE22
PRG1_PRU0_GPO1	PRU_ICSSG PRU Data Output	IO	AG24
PRG1_PRU0_GPO2	PRU_ICSSG PRU Data Output	IO	AF23
PRG1_PRU0_GPO3	PRU_ICSSG PRU Data Output	IO	AD21
PRG1_PRU0_GPO4	PRU_ICSSG PRU Data Output	IO	AG23
PRG1_PRU0_GPO5	PRU_ICSSG PRU Data Output	IO	AF27
PRG1_PRU0_GPO6	PRU_ICSSG PRU Data Output	IO	AF22
PRG1_PRU0_GPO7	PRU_ICSSG PRU Data Output	IO	AG27
PRG1_PRU0_GPO8	PRU_ICSSG PRU Data Output	IO	AF28
PRG1_PRU0_GPO9	PRU_ICSSG PRU Data Output	IO	AF26
PRG1_PRU0_GPO10	PRU_ICSSG PRU Data Output	IO	AH25
PRG1_PRU0_GPO11	PRU_ICSSG PRU Data Output	IO	AF21, AH20
PRG1_PRU0_GPO12	PRU_ICSSG PRU Data Output	IO	AH20, AH21
PRG1_PRU0_GPO13	PRU_ICSSG PRU Data Output	IO	AG20, AH21
PRG1_PRU0_GPO14	PRU_ICSSG PRU Data Output	IO	AD19, AG20
PRG1_PRU0_GPO15	PRU_ICSSG PRU Data Output	IO	AD19, AF21
PRG1_PRU0_GPO16	PRU_ICSSG PRU Data Output	IO	AD20
PRG1_PRU0_GPO17	PRU_ICSSG PRU Data Output	IO	AH26
PRG1_PRU0_GPO18	PRU_ICSSG PRU Data Output	IO	AG25
PRG1_PRU0_GPO19	PRU_ICSSG PRU Data Output	IO	AG26
PRG1_PRU1_GPI0	PRU_ICSSG PRU Data Input	I	AH24
PRG1_PRU1_GPI1	PRU_ICSSG PRU Data Input	I	AH23
PRG1_PRU1_GPI2	PRU_ICSSG PRU Data Input	I	AG21
PRG1_PRU1_GPI3	PRU_ICSSG PRU Data Input	I	AH22
PRG1_PRU1_GPI4	PRU_ICSSG PRU Data Input	I	AE21
PRG1_PRU1_GPI5	PRU_ICSSG PRU Data Input	I	AC22
PRG1_PRU1_GPI6	PRU_ICSSG PRU Data Input	I	AG22
PRG1_PRU1_GPI7	PRU_ICSSG PRU Data Input	I	AD23
PRG1_PRU1_GPI8	PRU_ICSSG PRU Data Input	I	AE24
PRG1_PRU1_GPI9	PRU_ICSSG PRU Data Input	I	AF25
PRG1_PRU1_GPI10	PRU_ICSSG PRU Data Input	I	AF24
PRG1_PRU1_GPI11	PRU_ICSSG PRU Data Input	I	AC20
PRG1_PRU1_GPI12	PRU_ICSSG PRU Data Input	I	AE20
PRG1_PRU1_GPI13	PRU_ICSSG PRU Data Input	I	AF19
PRG1_PRU1_GPI14	PRU_ICSSG PRU Data Input	I	AH19
PRG1_PRU1_GPI15	PRU_ICSSG PRU Data Input	I	AG19
PRG1_PRU1_GPI16	PRU_ICSSG PRU Data Input	I	AE19
PRG1_PRU1_GPI17	PRU_ICSSG PRU Data Input	I	AE23
PRG1_PRU1_GPI18	PRU_ICSSG PRU Data Input	I	AD22
PRG1_PRU1_GPI19	PRU_ICSSG PRU Data Input	I	AC21
PRG1_PRU1_GPO0	PRU_ICSSG PRU Data Output	IO	AH24
PRG1_PRU1_GPO1	PRU_ICSSG PRU Data Output	IO	AH23
PRG1_PRU1_GPO2	PRU_ICSSG PRU Data Output	IO	AG21
PRG1_PRU1_GPO3	PRU_ICSSG PRU Data Output	IO	AH22

Copyright © 2023 Texas Instruments Incorporated

Table 5-54. PRU_ICSSG1 Signal Descriptions (continued)

SIGNAL NAME [1]	DESCRIPTION [2]	PIN TYPE [3]	BALL [4]
PRG1_PRU1_GPO4	PRU_ICSSG PRU Data Output	IO	AE21
PRG1_PRU1_GPO5	PRU_ICSSG PRU Data Output	IO	AC22
PRG1_PRU1_GPO6	PRU_ICSSG PRU Data Output	IO	AG22
PRG1_PRU1_GPO7	PRU_ICSSG PRU Data Output	IO	AD23
PRG1_PRU1_GPO8	PRU_ICSSG PRU Data Output	IO	AE24
PRG1_PRU1_GPO9	PRU_ICSSG PRU Data Output	IO	AF25
PRG1_PRU1_GPO10	PRU_ICSSG PRU Data Output	IO	AF24
PRG1_PRU1_GPO11	PRU_ICSSG PRU Data Output	IO	AC20, AE20
PRG1_PRU1_GPO12	PRU_ICSSG PRU Data Output	IO	AE20, AF19
PRG1_PRU1_GPO13	PRU_ICSSG PRU Data Output	IO	AF19, AH19
PRG1_PRU1_GPO14	PRU_ICSSG PRU Data Output	IO	AG19, AH19
PRG1_PRU1_GPO15	PRU_ICSSG PRU Data Output	IO	AC20, AG19
PRG1_PRU1_GPO16	PRU_ICSSG PRU Data Output	IO	AE19
PRG1_PRU1_GPO17	PRU_ICSSG PRU Data Output	IO	AE23
PRG1_PRU1_GPO18	PRU_ICSSG PRU Data Output	IO	AD22
PRG1_PRU1_GPO19	PRU_ICSSG PRU Data Output	IO	AC21
PRG1_PWM0_TZ_IN	PRU_ICSSG PWM Trip Zone Input	I	AG25
PRG1_PWM0_TZ_OUT	PRU_ICSSG PWM Trip Zone Output	O	AG26
PRG1_PWM1_TZ_IN	PRU_ICSSG PWM Trip Zone Input	I	AD22
PRG1_PWM1_TZ_OUT	PRU_ICSSG PWM Trip Zone Output	O	AC21
PRG1_PWM2_TZ_IN	PRU_ICSSG PWM Trip Zone Input	I	AF24
PRG1_PWM2_TZ_OUT	PRU_ICSSG PWM Trip Zone Output	O	AE24
PRG1_PWM3_TZ_IN	PRU_ICSSG PWM Trip Zone Input	I	AF26
PRG1_PWM3_TZ_OUT	PRU_ICSSG PWM Trip Zone Output	O	AF21
PRG1_PWM0_A0	PRU_ICSSG PWM Output A	IO	AH20
PRG1_PWM0_A1	PRU_ICSSG PWM Output A	IO	AG20
PRG1_PWM0_A2	PRU_ICSSG PWM Output A	IO	AD20
PRG1_PWM0_B0	PRU_ICSSG PWM Output B	IO	AH21
PRG1_PWM0_B1	PRU_ICSSG PWM Output B	IO	AD19
PRG1_PWM0_B2	PRU_ICSSG PWM Output B	IO	AH26
PRG1_PWM1_A0	PRU_ICSSG PWM Output A	IO	AE20
PRG1_PWM1_A1	PRU_ICSSG PWM Output A	IO	AH19
PRG1_PWM1_A2	PRU_ICSSG PWM Output A	IO	AE19
PRG1_PWM1_B0	PRU_ICSSG PWM Output B	IO	AF19
PRG1_PWM1_B1	PRU_ICSSG PWM Output B	IO	AG19
PRG1_PWM1_B2	PRU_ICSSG PWM Output B	IO	AE23
PRG1_PWM2_A0	PRU_ICSSG PWM Output A	IO	AF23
PRG1_PWM2_A1	PRU_ICSSG PWM Output A	IO	AF28
PRG1_PWM2_A2	PRU_ICSSG PWM Output A	IO	AG21
PRG1_PWM2_B0	PRU_ICSSG PWM Output B	IO	AG23
PRG1_PWM2_B1	PRU_ICSSG PWM Output B	IO	AH25
PRG1_PWM2_B2	PRU_ICSSG PWM Output B	IO	AE21
PRG1_PWM3_A0	PRU_ICSSG PWM Output A	IO	AE22
PRG1_PWM3_A1	PRU_ICSSG PWM Output A	IO	AF22
PRG1_PWM3_A2	PRU_ICSSG PWM Output A	IO	AD21

Copyright © 2023 Texas Instruments Incorporated

Table 5-54. PRU_ICSSG1 Signal Descriptions (continued)

SIGNAL NAME [1]	DESCRIPTION [2]	PIN TYPE [3]	BALL [4]
PRG1_PWM3_B0	PRU_ICSSG PWM Output B	IO	AG24
PRG1_PWM3_B1	PRU_ICSSG PWM Output B	IO	AG27
PRG1_PWM3_B2	PRU_ICSSG PWM Output B	IO	AF27
PRG1_RGMII1_RXC	PRU_ICSSG RGMII Receive Clock	I	AF22
PRG1_RGMII1_RX_CTL	PRU_ICSSG RGMII Receive Control	I	AG23
PRG1_RGMII1_TXC	PRU_ICSSG RGMII Transmit Clock	IO	AD20
PRG1_RGMII1_TX_CTL	PRU_ICSSG RGMII Transmit Control	O	AF21
PRG1_RGMII2_RXC	PRU_ICSSG RGMII Receive Clock	I	AG22
PRG1_RGMII2_RX_CTL	PRU_ICSSG RGMII Receive Control	I	AE21
PRG1_RGMII2_TXC	PRU_ICSSG RGMII Transmit Clock	IO	AE19
PRG1_RGMII2_TX_CTL	PRU_ICSSG RGMII Transmit Control	O	AC20
PRG1_RGMII1_RD0	PRU_ICSSG RGMII Receive Data	I	AE22
PRG1_RGMII1_RD1	PRU_ICSSG RGMII Receive Data	I	AG24
PRG1_RGMII1_RD2	PRU_ICSSG RGMII Receive Data	I	AF23
PRG1_RGMII1_RD3	PRU_ICSSG RGMII Receive Data	I	AD21
PRG1_RGMII1_TD0	PRU_ICSSG RGMII Transmit Data	O	AH20
PRG1_RGMII1_TD1	PRU_ICSSG RGMII Transmit Data	O	AH21
PRG1_RGMII1_TD2	PRU_ICSSG RGMII Transmit Data	O	AG20
PRG1_RGMII1_TD3	PRU_ICSSG RGMII Transmit Data	O	AD19
PRG1_RGMII2_RD0	PRU_ICSSG RGMII Receive Data	I	AH24
PRG1_RGMII2_RD1	PRU_ICSSG RGMII Receive Data	I	AH23
PRG1_RGMII2_RD2	PRU_ICSSG RGMII Receive Data	I	AG21
PRG1_RGMII2_RD3	PRU_ICSSG RGMII Receive Data	I	AH22
PRG1_RGMII2_TD0	PRU_ICSSG RGMII Transmit Data	O	AE20
PRG1_RGMII2_TD1	PRU_ICSSG RGMII Transmit Data	O	AF19
PRG1_RGMII2_TD2	PRU_ICSSG RGMII Transmit Data	O	AH19
PRG1_RGMII2_TD3	PRU_ICSSG RGMII Transmit Data	O	AG19
PRG1_UART0_CTSn	PRU_ICSSG UART Clear to Send (active low)	I	AF26
PRG1_UART0_RTSn	PRU_ICSSG UART Request to Send (active low)	O	AH25
PRG1_UART0_RXD	PRU_ICSSG UART Receive Data	I	AF25
PRG1_UART0_TXD	PRU_ICSSG UART Transmit Data	O	AF24

Table 5-55. PRU_ICSSG2 Signal Descriptions

SIGNAL NAME [1]	DESCRIPTION [2]	PIN TYPE [3]	BALL [4]
PRG2_ECAP0_IN_APWM_OUT	PRU_ICSSG Enhanced Capture (ECAP) Input or Auxiliary PWM (APWM) Ouput	IO	AE16
PRG2_ECAP0_SYNC_IN	PRU_ICSSG ECAP Sync Input	I	AD14
PRG2_ECAP0_SYNC_OUT	PRU_ICSSG ECAP Sync Output	O	AG14
PRG2_IEP0_EDIO_OUTVALID	PRU_ICSSG Industrial Ethernet Digital I/O Outvalid	O(1)	A23
PRG2_IEP0_EDC_LATCH_IN0	PRU_ICSSG Industrial Ethernet Distributed Clock Latch Input	I	AD12
PRG2_IEP0_EDC_LATCH_IN1	PRU_ICSSG Industrial Ethernet Distributed Clock Latch Input	I	AE12
PRG2_IEP0_EDC_SYNC_OUT0	PRU_ICSSG Industrial Ethernet Distributed Clock Sync Output	O	AH12

Copyright © 2023 Texas Instruments Incorporated

Table 5-55. PRU_ICSSG2 Signal Descriptions (continued)

SIGNAL NAME [1]	DESCRIPTION [2]	PIN TYPE [3]	BALL [4]
PRG2_IEP0_EDC_SYNC_OUT1	PRU_ICSSG Industrial Ethernet Distributed Clock Sync Output	O	AF12
PRG2_IEP0_EDIO_DATA_IN_OUT28	PRU_ICSSG Industrial Ethernet Digital I/O Data Input/ Output	IO	R23
PRG2_IEP0_EDIO_DATA_IN_OUT29	PRU_ICSSG Industrial Ethernet Digital I/O Data Input/ Output	IO	T24
PRG2_IEP0_EDIO_DATA_IN_OUT30	PRU_ICSSG Industrial Ethernet Digital I/O Data Input/ Output	IO	R25
PRG2_IEP0_EDIO_DATA_IN_OUT31	PRU_ICSSG Industrial Ethernet Digital I/O Data Input/ Output	IO	T27
PRG2_IEP1_EDC_LATCH_IN0	PRU_ICSSG Industrial Ethernet Distributed Clock Latch Input	I	R23
PRG2_IEP1_EDC_LATCH_IN1	PRU_ICSSG Industrial Ethernet Distributed Clock Latch Input	I	R25
PRG2_IEP1_EDC_SYNC_OUT0	PRU_ICSSG Industrial Ethernet Distributed Clock Sync Output	O	T24
PRG2_IEP1_EDC_SYNC_OUT1	PRU_ICSSG Industrial Ethernet Distributed Clock Sync Output	O	T27
PRG2_MDIO0_MDC	PRU_ICSSG MDIO Clock	O	AE15
PRG2_MDIO0_MDIO	PRU_ICSSG MDIO Data	IO	AC19
PRG2_PRU0_GPI0	PRU_ICSSG PRU Data Input	I	AF18
PRG2_PRU0_GPI1	PRU_ICSSG PRU Data Input	I	AE18
PRG2_PRU0_GPI2	PRU_ICSSG PRU Data Input	I	AH17
PRG2_PRU0_GPI3	PRU_ICSSG PRU Data Input	I	AG18
PRG2_PRU0_GPI4	PRU_ICSSG PRU Data Input	I	AG17
PRG2_PRU0_GPI5	PRU_ICSSG PRU Data Input	I	AF17
PRG2_PRU0_GPI6	PRU_ICSSG PRU Data Input	I	AE17
PRG2_PRU0_GPI7	PRU_ICSSG PRU Data Input	I	AC19
PRG2_PRU0_GPI8	PRU_ICSSG PRU Data Input	I	AH16
PRG2_PRU0_GPI9	PRU_ICSSG PRU Data Input	I	AG16
PRG2_PRU0_GPI10	PRU_ICSSG PRU Data Input	I	AF16
PRG2_PRU0_GPI11	PRU_ICSSG PRU Data Input	I	AE16
PRG2_PRU0_GPI12	PRU_ICSSG PRU Data Input	I	N23
PRG2_PRU0_GPI13	PRU_ICSSG PRU Data Input	I	M26
PRG2_PRU0_GPI14	PRU_ICSSG PRU Data Input	I	P28
PRG2_PRU0_GPI15	PRU_ICSSG PRU Data Input	I	P27
PRG2_PRU0_GPI16	PRU_ICSSG PRU Data Input	I	AD16
PRG2_PRU0_GPI17	PRU_ICSSG PRU Data Input	I	P23
PRG2_PRU0_GPO0	PRU_ICSSG PRU Data Output	IO	AF18
PRG2_PRU0_GPO1	PRU_ICSSG PRU Data Output	IO	AE18
PRG2_PRU0_GPO2	PRU_ICSSG PRU Data Output	IO	AH17
PRG2_PRU0_GPO3	PRU_ICSSG PRU Data Output	IO	AG18
PRG2_PRU0_GPO4	PRU_ICSSG PRU Data Output	IO	AG17
PRG2_PRU0_GPO5	PRU_ICSSG PRU Data Output	IO	AF17
PRG2_PRU0_GPO6	PRU_ICSSG PRU Data Output	IO	AE17
PRG2_PRU0_GPO7	PRU_ICSSG PRU Data Output	IO	AC19
PRG2_PRU0_GPO8	PRU_ICSSG PRU Data Output	IO	AH16

Copyright © 2023 Texas Instruments Incorporated

Table 5-55. PRU_ICSSG2 Signal Descriptions (continued)

SIGNAL NAME [1]	DESCRIPTION [2]	PIN TYPE [3]	BALL [4]
PRG2_PRU0_GPO9	PRU_ICSSG PRU Data Output	IO	AG16
PRG2_PRU0_GPO10	PRU_ICSSG PRU Data Output	IO	AF16
PRG2_PRU0_GPO11	PRU_ICSSG PRU Data Output	IO	AE16
PRG2_PRU0_GPO12	PRU_ICSSG PRU Data Output	IO	N23
PRG2_PRU0_GPO13	PRU_ICSSG PRU Data Output	IO	M26
PRG2_PRU0_GPO14	PRU_ICSSG PRU Data Output	IO	P28
PRG2_PRU0_GPO15	PRU_ICSSG PRU Data Output	IO	P27
PRG2_PRU0_GPO16	PRU_ICSSG PRU Data Output	IO	AD16
PRG2_PRU0_GPO17	PRU_ICSSG PRU Data Output	IO	P23
PRG2_PRU1_GPI0	PRU_ICSSG PRU Data Input	I	AH15
PRG2_PRU1_GPI1	PRU_ICSSG PRU Data Input	I	AC16
PRG2_PRU1_GPI2	PRU_ICSSG PRU Data Input	I	AD17
PRG2_PRU1_GPI3	PRU_ICSSG PRU Data Input	I	AH14
PRG2_PRU1_GPI4	PRU_ICSSG PRU Data Input	I	AG14
PRG2_PRU1_GPI5	PRU_ICSSG PRU Data Input	I	AG15
PRG2_PRU1_GPI6	PRU_ICSSG PRU Data Input	I	AC17
PRG2_PRU1_GPI7	PRU_ICSSG PRU Data Input	I	AE15
PRG2_PRU1_GPI8	PRU_ICSSG PRU Data Input	I	AD15
PRG2_PRU1_GPI9	PRU_ICSSG PRU Data Input	I	AF14
PRG2_PRU1_GPI10	PRU_ICSSG PRU Data Input	I	AC15
PRG2_PRU1_GPI11	PRU_ICSSG PRU Data Input	I	AD14
PRG2_PRU1_GPI12	PRU_ICSSG PRU Data Input	I	N26
PRG2_PRU1_GPI13	PRU_ICSSG PRU Data Input	I	N25
PRG2_PRU1_GPI14	PRU_ICSSG PRU Data Input	I	P24
PRG2_PRU1_GPI15	PRU_ICSSG PRU Data Input	I	R27
PRG2_PRU1_GPI16	PRU_ICSSG PRU Data Input	I	AE14
PRG2_PRU1_GPI17	PRU_ICSSG PRU Data Input	I	T23
PRG2_PRU1_GPO0	PRU_ICSSG PRU Data Output	IO	AH15
PRG2_PRU1_GPO1	PRU_ICSSG PRU Data Output	IO	AC16
PRG2_PRU1_GPO2	PRU_ICSSG PRU Data Output	IO	AD17
PRG2_PRU1_GPO3	PRU_ICSSG PRU Data Output	IO	AH14
PRG2_PRU1_GPO4	PRU_ICSSG PRU Data Output	IO	AG14
PRG2_PRU1_GPO5	PRU_ICSSG PRU Data Output	IO	AG15
PRG2_PRU1_GPO6	PRU_ICSSG PRU Data Output	IO	AC17
PRG2_PRU1_GPO7	PRU_ICSSG PRU Data Output	IO	AE15
PRG2_PRU1_GPO8	PRU_ICSSG PRU Data Output	IO	AD15
PRG2_PRU1_GPO9	PRU_ICSSG PRU Data Output	IO	AF14
PRG2_PRU1_GPO10	PRU_ICSSG PRU Data Output	IO	AC15
PRG2_PRU1_GPO11	PRU_ICSSG PRU Data Output	IO	AD14
PRG2_PRU1_GPO12	PRU_ICSSG PRU Data Output	IO	N26
PRG2_PRU1_GPO13	PRU_ICSSG PRU Data Output	IO	N25
PRG2_PRU1_GPO14	PRU_ICSSG PRU Data Output	IO	P24
PRG2_PRU1_GPO15	PRU_ICSSG PRU Data Output	IO	R27
PRG2_PRU1_GPO16	PRU_ICSSG PRU Data Output	IO	AE14
PRG2_PRU1_GPO17	PRU_ICSSG PRU Data Output	IO	T23

Copyright © 2023 Texas Instruments Incorporated

Table 5-55. PRU_ICSSG2 Signal Descriptions (continued)

SIGNAL NAME [1]	DESCRIPTION [2]	PIN TYPE [3]	BALL [4]
PRG2_PWM0_TZ_IN	PRU_ICSSG PWM Trip Zone Input	I	P28
PRG2_PWM0_TZ_OUT	PRU_ICSSG PWM Trip Zone Output	O	P24
PRG2_PWM1_TZ_IN	PRU_ICSSG PWM Trip Zone Input	I	F18
PRG2_PWM1_TZ_OUT	PRU_ICSSG PWM Trip Zone Output	O	AE14
PRG2_PWM2_TZ_IN	PRU_ICSSG PWM Trip Zone Input	I	P23
PRG2_PWM2_TZ_OUT	PRU_ICSSG PWM Trip Zone Output	O	T23
PRG2_PWM3_TZ_IN	PRU_ICSSG PWM Trip Zone Input	I	AE15
PRG2_PWM3_TZ_OUT	PRU_ICSSG PWM Trip Zone Output	O	AF14
PRG2_PWM0_A0	PRU_ICSSG PWM Output A	IO	AG17
PRG2_PWM0_A1	PRU_ICSSG PWM Output A	IO	AD16
PRG2_PWM0_A2	PRU_ICSSG PWM Output A	IO	AD15
PRG2_PWM0_B0	PRU_ICSSG PWM Output B	IO	AH16
PRG2_PWM0_B1	PRU_ICSSG PWM Output B	IO	AD17
PRG2_PWM0_B2	PRU_ICSSG PWM Output B	IO	AC15
PRG2_PWM1_A0	PRU_ICSSG PWM Output A	IO	R23
PRG2_PWM1_A1	PRU_ICSSG PWM Output A	IO	AD18
PRG2_PWM1_A2	PRU_ICSSG PWM Output A	IO	AE26
PRG2_PWM1_B0	PRU_ICSSG PWM Output B	IO	T24
PRG2_PWM1_B1	PRU_ICSSG PWM Output B	IO	AH18
PRG2_PWM1_B2	PRU_ICSSG PWM Output B	IO	AE28
PRG2_PWM2_A0	PRU_ICSSG PWM Output A	IO	N23
PRG2_PWM2_A1	PRU_ICSSG PWM Output A	IO	P27
PRG2_PWM2_A2	PRU_ICSSG PWM Output A	IO	N25
PRG2_PWM2_B0	PRU_ICSSG PWM Output B	IO	M26
PRG2_PWM2_B1	PRU_ICSSG PWM Output B	IO	N26
PRG2_PWM2_B2	PRU_ICSSG PWM Output B	IO	R27
PRG2_PWM3_A0	PRU_ICSSG PWM Output A	IO	AF18
PRG2_PWM3_A1	PRU_ICSSG PWM Output A	IO	AF17
PRG2_PWM3_A2	PRU_ICSSG PWM Output A	IO	AH15
PRG2_PWM3_B0	PRU_ICSSG PWM Output B	IO	AG18
PRG2_PWM3_B1	PRU_ICSSG PWM Output B	IO	AE17
PRG2_PWM3_B2	PRU_ICSSG PWM Output B	IO	AC16
PRG2_RGMII1_RXC	PRU_ICSSG RGMII Receive Clock	I	AF17
PRG2_RGMII1_RX_CTL	PRU_ICSSG RGMII Receive Control	I	AG17
PRG2_RGMII1_TXC	PRU_ICSSG RGMII Transmit Clock	IO	AD16
PRG2_RGMII1_TX_CTL	PRU_ICSSG RGMII Transmit Control	O	AE17
PRG2_RGMII2_RXC	PRU_ICSSG RGMII Receive Clock	I	AG15
PRG2_RGMII2_RX_CTL	PRU_ICSSG RGMII Receive Control	I	AG14
PRG2_RGMII2_TXC	PRU_ICSSG RGMII Transmit Clock	IO	AE14
PRG2_RGMII2_TX_CTL	PRU_ICSSG RGMII Transmit Control	O	AC17
PRG2_RGMII1_RD0	PRU_ICSSG RGMII Receive Data	I	AF18
PRG2_RGMII1_RD1	PRU_ICSSG RGMII Receive Data	I	AE18
PRG2_RGMII1_RD2	PRU_ICSSG RGMII Receive Data	I	AH17
PRG2_RGMII1_RD3	PRU_ICSSG RGMII Receive Data	I	AG18
PRG2_RGMII1_TD0	PRU_ICSSG RGMII Transmit Data	O	AH16

Copyright © 2023 Texas Instruments Incorporated

Table 5-55. PRU_ICSSG2 Signal Descriptions (continued)

SIGNAL NAME [1]	DESCRIPTION [2]	PIN TYPE [3]	BALL [4]
PRG2_RGMII1_TD1	PRU_ICSSG RGMII Transmit Data	O	AG16
PRG2_RGMII1_TD2	PRU_ICSSG RGMII Transmit Data	O	AF16
PRG2_RGMII1_TD3	PRU_ICSSG RGMII Transmit Data	O	AE16
PRG2_RGMII2_RD0	PRU_ICSSG RGMII Receive Data	I	AH15
PRG2_RGMII2_RD1	PRU_ICSSG RGMII Receive Data	I	AC16
PRG2_RGMII2_RD2	PRU_ICSSG RGMII Receive Data	I	AD17
PRG2_RGMII2_RD3	PRU_ICSSG RGMII Receive Data	I	AH14
PRG2_RGMII2_TD0	PRU_ICSSG RGMII Transmit Data	O	AD15
PRG2_RGMII2_TD1	PRU_ICSSG RGMII Transmit Data	O	AF14
PRG2_RGMII2_TD2	PRU_ICSSG RGMII Transmit Data	O	AC15
PRG2_RGMII2_TD3	PRU_ICSSG RGMII Transmit Data	O	AD14
PRG2_UART0_CTSn	PRU_ICSSG UART Clear to Send (active low)	I	AD12
PRG2_UART0_RTSn	PRU_ICSSG UART Request to Send (active low)	O	AH12
PRG2_UART0_RXD	PRU_ICSSG UART Receive Data	I	AE12
PRG2_UART0_TXD	PRU_ICSSG UART Transmit Data	O	AF12

(1) When OSC1 is being used with an external crystal, this signal is unavailable. The output functionality must be disabled.

5.3.22 SERDES

5.3.22.1 MAIN Domain

Table 5-56. SERDES0 Signal Descriptions

see (1)

SIGNAL NAME [1]	DESCRIPTION [2]	PIN TYPE [3]	BALL [4]
SERDES0_REFCLKN	SERDES Clock Input (negative)	I	AG5
SERDES0_REFCLKP	SERDES Clock Input (positive)	I	AG6
SERDES0_REFRES	SERDES Reference Resistor(2)	A	AC9
SERDES0_RXN	SERDES Differential Receive Data (negative)	I	AH3
SERDES0_RXP	SERDES Differential Receive Data (positive)	I	AG2
SERDES0_TXN	SERDES Differential Transmit Data (negative)	O	AH4
SERDES0_TXP	SERDES Differential Transmit Data (positive)	O	AG3

(1) The functionality of these pins is controlled by CTRLMMR_SERDES0_CTRL[1:0] LANE_FUNC_SEL. 0x0 = USB3, 0x1 = PCIe0 Lane0, 0x2 = ICSS2 SGMII Lane0.
(2) The required resistor value is 3kΩ ±1%.

Table 5-57. SERDES1 Signal Descriptions

see (1)

SIGNAL NAME [1]	DESCRIPTION [2]	PIN TYPE [3]	BALL [4]
SERDES1_REFCLKN	SERDES Clock Input (negative)	I	AH6
SERDES1_REFCLKP	SERDES Clock Input (positive)	I	AH7
SERDES1_REFRES	SERDES Reference Resistor(2)	A	AC14
SERDES1_RXN	SERDES Differential Receive Data (negative)	I	AG9
SERDES1_RXP	SERDES Differential Receive Data (positive)	I	AH10
SERDES1_TXN	SERDES Differential Transmit Data (negative)	O	AH9

Copyright © 2023 Texas Instruments Incorporated

Table 5-57. SERDES1 Signal Descriptions (continued)

see (1)

SIGNAL NAME [1]	DESCRIPTION [2]	PIN TYPE [3]	BALL [4]
SERDES1_TXP	SERDES Differential Transmit Data (positive)	O	AG8

(1) The functionality of these pins is controlled by CTRLMMR_SERDES1_CTRL[1:0] LANE_FUNC_SEL. 0x0 = PCIe1 Lane0, 0x1 = PCIe0 Lane1, 0x2 = ICSS2 SGMII Lane1.

5.3.23 UART

5.3.23.1 MAIN Domain

Table 5-58. UART0 Signal Descriptions

SIGNAL NAME [1]	DESCRIPTION [2]	PIN TYPE [3]	BALL [4]
UART0_CTSn	UART Clear to Send (active low)	I	AG11
UART0_DCDn	UART Data Carrier Detect (active low)	I	D25
UART0_DSRn	UART Data Set Ready (active low)	I	B26
UART0_DTRn	UART Data Terminal Ready (active low)	O	A24
UART0_RIN	UART Ring Indicator	I	E24
UART0_RTSn	UART Request to Send (active low)	O	AD11
UART0_RXD	UART Receive Data	I	AF11
UART0_TXD	UART Transmit Data	O	AE11

Table 5-59. UART1 Signal Descriptions

SIGNAL NAME [1]	DESCRIPTION [2]	PIN TYPE [3]	BALL [4]
UART1_CTSn	UART Clear to Send (active low)	I	AD22
UART1_RTSn	UART Request to Send (active low)	O	AC21
UART1_RXD	UART Receive Data	I	AE23
UART1_TXD	UART Transmit Data	O	AD23

Table 5-60. UART2 Signal Descriptions

SIGNAL NAME [1]	DESCRIPTION [2]	PIN TYPE [3]	BALL [4]
UART2_CTSn	UART Clear to Send (active low)	I	Y26
UART2_RTSn	UART Request to Send (active low)	O	W26
UART2_RXD	UART Receive Data	I	Y27
UART2_TXD	UART Transmit Data	O	W28

5.3.23.2 MCU Domain

Table 5-61. UART0 Signal Descriptions

SIGNAL NAME [1]	DESCRIPTION [2]	PIN TYPE [3]	BALL [4]
MCU_UART0_CTSn	UART Clear to Send (active low)	I	P1
MCU_UART0_RTSn	UART Request to Send (active low)	O	N3
MCU_UART0_RXD	UART Receive Data	I	P4
MCU_UART0_TXD	UART Transmit Data	O	P5

Copyright © 2023 Texas Instruments Incorporated

5.3.23.3 WKUP Domain

Table 5-62. UART0 Signal Descriptions

SIGNAL NAME [1]	DESCRIPTION [2]	PIN TYPE [3]	BALL [4]
WKUP_UART0_CTSn	UART Clear to Send (active low)	I	AC2
WKUP_UART0_RTSn	UART Request to Send (active low)	O	AC1
WKUP_UART0_RXD	UART Receive Data	I	AB1
WKUP_UART0_TXD	UART Transmit Data	O	AB5

5.3.24 USB

5.3.24.1 MAIN Domain

Table 5-63. USB0 Signal Descriptions

SIGNAL NAME [1]	DESCRIPTION [2]	PIN TYPE [3]	BALL [4]
USB0_DM	USB 2.0 Differential Data (negative)	IO	AE2
USB0_DP	USB 2.0 Differential Data (positive)	IO	AF1
USB0_DRVVBUS	USB VBUS control output (active high)	O	AD9
USB0_ID	USB 2.0 Dual-Role Device Role Select	A	AF7
USB0_VBUS(1)	USB Level-shifted VBUS Input	A	AE7

(1) An external resistor divider is required to limit the voltage applied to the device pin. For more information, see Section 8.2.3, *USB Design Guidelines*.

Table 5-64. USB1 Signal Descriptions

SIGNAL NAME [1]	DESCRIPTION [2]	PIN TYPE [3]	BALL [4]
USB1_DM	USB 2.0 Differential Data (negative)	IO	AD2
USB1_DP	USB 2.0 Differential Data (positive)	IO	AE1
USB1_DRVVBUS	USB VBUS control output (active high)	O	AC8
USB1_ID	USB 2.0 Dual-Role Device Role Select	A	AF5
USB1_VBUS(1)	USB Level-shifted VBUS Input	A	AF6

(1) An external resistor divider is required to limit the voltage applied to the device pin. For more information, see Section 8.2.3, *USB Design Guidelines*.

5.3.25 Emulation and Debug

5.3.25.1 MAIN Domain

Table 5-65. Emulation and Debug 0 Signal Descriptions

SIGNAL NAME [1]	DESCRIPTION [2]	PIN TYPE [3]	BALL [4]
EMU0	Emulation Control 0	IO	AA2
EMU1	Emulation Control 1	IO	AA1
TCK	JTAG Test Clock Input	I	AA4
TDI	JTAG Test Data Input	I	C20
TDO	JTAG Test Data Output	OZ	A20
TMS	JTAG Test Mode Select Input	I	A21
TRSTn	JTAG Reset	I	AA3
TRC_CLK	Trace Clock	O	AF18
TRC_CTL	Trace Control	O	AE18
TRC_DATA0	Trace Data 0	O	AH17
TRC_DATA1	Trace Data 1	O	AG18

Copyright © 2023 Texas Instruments Incorporated

Table 5-65. Emulation and Debug 0 Signal Descriptions (continued)

SIGNAL NAME [1]	DESCRIPTION [2]	PIN TYPE [3]	BALL [4]
TRC_DATA2	Trace Data 2	O	AG17
TRC_DATA3	Trace Data 3	O	AF17
TRC_DATA4	Trace Data 4	O	AE17
TRC_DATA5	Trace Data 5	O	AC19
TRC_DATA6	Trace Data 6	O	AH16
TRC_DATA7	Trace Data 7	O	AG16
TRC_DATA8	Trace Data 8	O	AF16
TRC_DATA9	Trace Data 9	O	AE16
TRC_DATA10	Trace Data 10	O	AD16
TRC_DATA11	Trace Data 11	O	AH15
TRC_DATA12	Trace Data 12	O	AC16
TRC_DATA13	Trace Data 13	O	AD17
TRC_DATA14	Trace Data 14	O	AH14
TRC_DATA15	Trace Data 15	O	AG14
TRC_DATA16	Trace Data 16	O	AG15
TRC_DATA17	Trace Data 17	O	AC17
TRC_DATA18	Trace Data 18	O	AE15
TRC_DATA19	Trace Data 19	O	AD15
TRC_DATA20	Trace Data 20	O	AF14
TRC_DATA21	Trace Data 21	O	AC15
TRC_DATA22	Trace Data 22	O	AD14
TRC_DATA23	Trace Data 23	O	AE14

Copyright © 2023 Texas Instruments Incorporated

5.3.26 System and Miscellaneous

5.3.26.1 Boot Mode Configuration

5.3.26.1.1 MAIN Domain

Table 5-66. Sysboot Signal Descriptions

SIGNAL NAME [1]	DESCRIPTION [2]	PIN TYPE [3]	BALL [4]
BOOTMODE00	Bootmode pin 00	I	M27
BOOTMODE01	Bootmode pin 01	I	M23
BOOTMODE02	Bootmode pin 02	I	M28
BOOTMODE03	Bootmode pin 03	I	M24
BOOTMODE04	Bootmode pin 04	I	N24
BOOTMODE05	Bootmode pin 05	I	N27
BOOTMODE06	Bootmode pin 06	I	N28
BOOTMODE07	Bootmode pin 07	I	M25
BOOTMODE08	Bootmode pin 08	I	N23
BOOTMODE09	Bootmode pin 09	I	M26
BOOTMODE10	Bootmode pin 10	I	P28
BOOTMODE11	Bootmode pin 11	I	P27
BOOTMODE12	Bootmode pin 12	I	N26
BOOTMODE13	Bootmode pin 13	I	N25
BOOTMODE14	Bootmode pin 14	I	P24
BOOTMODE15	Bootmode pin 15	I	R27
BOOTMODE16	Bootmode pin 16	I	P25
BOOTMODE17	Bootmode pin 17	I	P26
BOOTMODE18	Bootmode pin 18	I	U28

5.3.26.1.2 MCU Domain

Table 5-67. Sysboot Signal Descriptions

SIGNAL NAME [1]	DESCRIPTION [2]	PIN TYPE [3]	BALL [4]
MCU_BOOTMODE00	Bootmode pin 00	I	AF4
MCU_BOOTMODE01	Bootmode pin 01	I	AF3
MCU_BOOTMODE02	Bootmode pin 02	I	AE3
MCU_BOOTMODE03(1)	Bootmode pin 03	I	AD1
MCU_BOOTMODE04(1)	Bootmode pin 04	I	AC3
MCU_BOOTMODE05(1)	Bootmode pin 05	I	Y2
MCU_BOOTMODE06(1)	Bootmode pin 06	I	Y1
MCU_BOOTMODE07(1)	Bootmode pin 07	I	Y3
MCU_BOOTMODE08(1)	Bootmode pin 08	I	AC5
MCU_BOOTMODE09	Bootmode pin 09	I	AB4

(1) These signals must be connected to VSS through a separate external pull resistor to ensure these balls are held to a valid logic low level.

Copyright © 2023 Texas Instruments Incorporated

5.3.26.2 Clock

5.3.26.2.1 MAIN Domain

Table 5-68. Clock1 Signal Descriptions

SIGNAL NAME [1]	DESCRIPTION [2]	PIN TYPE [3]	BALL [4]
OSC1_XI	High frequency oscillator input	I	C22
OSC1_XO	High frequency oscillator output	O	E22

5.3.26.2.2 WKUP Domain

Table 5-69. Clock0 Signal Descriptions

SIGNAL NAME [1]	DESCRIPTION [2]	PIN TYPE [3]	BALL [4]
WKUP_LFOSC0_XI	Low frequency (32.768 kHz) oscillator input	I	AE4
WKUP_LFOSC0_XO	Low frequency (32.768 kHz) oscillator output	O	AC4
WKUP_OSC0_XI	High frequency oscillator input	I	AD5
WKUP_OSC0_XO	High frequency oscillator output	O	AE6

5.3.26.3 System

5.3.26.3.1 MAIN Domain

Table 5-70. System0 Signal Descriptions

SIGNAL NAME [1]	DESCRIPTION [2]	PIN TYPE [3]	BALL [4]
EXT_REFCLK1	External clock input to Main Domain, routed to Timer clock muxes as one of the selectable input clock sources for Timer/WDT modules, or as reference clock to MAIN_PLL2 (PER1 PLL)	I	A22
GPMC0_FCLK_MUX	GPMC functional clock output selected through a mux logic	O	R28
NMIn	External Interrupt	I	F18
OBSCLK0	Observation clock output for test and debug purposes only	O	C23
PORz	Main Domain cold reset	I	E19
PORz_OUT	Main Domain POR status output	O	C19
REFCLK0N	SERDES Differential Clock Output (negative)	O	AF9
REFCLK0P	SERDES Differential Clock Output (positive)	O	AF10
REFCLK1N	SERDES Differential Clock Output (negative)	O	AE8
REFCLK1P	SERDES Differential Clock Output (positive)	O	AE9
RESETSTATz	Main Domain warm reset status output	O	D19
RESETz	Main Domain warm reset	I	F17
SOC_SAFETY_ERRORn	Error signal output from Main Domain ESM	IO	E20
SYSCLKOUT0	SYSCLK0 output from Main PLL controller (divided by 4) for test and debug purposes only	O	B22

5.3.26.3.2 WKUP Domain

Table 5-71. System0 Signal Descriptions

SIGNAL NAME [1]	DESCRIPTION [2]	PIN TYPE [3]	BALL [4]
MCU_BYP_POR	MCU Bypass reset circuitry input. 0 = Internal POR is used, 1 = External MCU_PORz signal is used.	I	V5
MCU_CLKOUT0	Reference clock output for Ethernet PHYs (50MHz or 25MHz)	O	AB2

Copyright © 2023 Texas Instruments Incorporated

Table 5-71. System0 Signal Descriptions (continued)

SIGNAL NAME [1]	DESCRIPTION [2]	PIN TYPE [3]	BALL [4]
MCU_EXT_REFCLK0	External system clock input	I	AB3
MCU_OBSCLK0	Observation clock output for test and debug purposes only	O	AB2
MCU_PORz	MCU Domain cold reset	I	W5
MCU_PORz_OUT	MCU Domain POR status output	O	V2
MCU_RESETSTATz	MCU Domain warm reset status output	O	V3
MCU_RESETz	MCU Domain warm reset	I	W4
MCU_SAFETY_ERRORn	Error signal output from MCU Domain ESM	IO	W3
MCU_SYSCLKOUT0	MCU Domain system clock output (divided by 4) for test and debug purposes only	O	AB3
PMIC_POWER_EN0	Power enable output for MAIN Domain supplies	O	Y5
PMIC_POWER_EN1	Power enable output for MAIN Domain supplies	O	AA5

5.3.26.4 Miscellaneous

5.3.26.4.1 WKUP Domain

Table 5-72. Miscellaneous0 Signal Descriptions

SIGNAL NAME [1]	DESCRIPTION [2]	PIN TYPE [3]	BALL [4]
TEMP_DIODE_P(1)	Reserved	A	W6

(1) Do not connect any signal, test point, or board trace to this signal.

5.3.26.5 EFUSE

5.3.26.5.1 MAIN Domain

Table 5-73. EFUSE0 Signal Descriptions

SIGNAL NAME [1]	DESCRIPTION [2]	PIN TYPE [3]	BALL [4]
VPP_CORE(1)	Programming voltage for MAIN Domain efuses	PWR	F21

(1) This signal is valid only for High-Security devices. For more details, see Section 6.7, *VPP Specification for One-Time Programmable (OTP) eFUSEs*. For General Purpose devices do not connect any signal, test point, or board trace to this signal.

5.3.26.5.2 MCU Domain

Table 5-74. EFUSE0 Signal Descriptions

SIGNAL NAME [1]	DESCRIPTION [2]	PIN TYPE [3]	BALL [4]
VPP_MCU(1)	Programming voltage for MCU Domain efuses	PWR	T6

(1) This signal is valid only for High-Security devices. For more details, see Section 6.7, *VPP Specification for One-Time Programmable (OTP) eFUSEs*. For General Purpose devices do not connect any signal, test point, or board trace to this signal.

5.3.27 Power Supply

Table 5-75. Power Supply Signal Description

SIGNAL NAME [1]	DESCRIPTION [2]	PIN TYPE [3]	BALL [4]
CAP_VDDAR_CORE0(1)	External capacitor connection for CORE SRAM LDOs	CAP	P17
CAP_VDDAR_CORE1(1)	External capacitor connection for CORE SRAM LDOs	CAP	V17
CAP_VDDAR_CORE2(1)	External capacitor connection for CORE SRAM LDOs	CAP	W16
CAP_VDDAR_CORE3(1)	External capacitor connection for MSMC SRAM LDOs	CAP	M14
CAP_VDDAR_CORE4(1)	External capacitor connection for MSMC SRAM LDOs	CAP	L15

Copyright © 2023 Texas Instruments Incorporated

Table 5-75. Power Supply Signal Description (continued)

SIGNAL NAME [1]	DESCRIPTION [2]	PIN TYPE [3]	BALL [4]
CAP_VDDAR_MCU(1)	External capacitor connection for MCU SRAM LDO	CAP	U10
CAP_VDDAR_MPU0_0(1)	External capacitor connection for MPU SRAM LDOs	CAP	M12
CAP_VDDAR_MPU0_1(1)	External capacitor connection for MPU SRAM LDOs	CAP	N12
CAP_VDDAR_MPU1_0(1)	External capacitor connection for MPU SRAM LDOs	CAP	N18
CAP_VDDAR_MPU1_1(1)	External capacitor connection for MPU SRAM LDOs	CAP	N15
CAP_VDDAR_WKUP(1)	External capacitor connection for WKUP SRAM LDO	CAP	Y10
CAP_VDDA_1P8_IOLDO_WKUP(1)	External capacitor connection for IO Bias LDO in WKUP domain	CAP	AA8
CAP_VDDA_1P8_SDIO(2)	External capacitor connection for SDIO LDO	CAP	J17
CAP_VDDA_1P8_IOLDO0(1)	External capacitor connection for IO Bias LDO	CAP	G19
CAP_VDDA_1P8_IOLDO1(1)	External capacitor connection for IO Bias LDO	CAP	Y19
CAP_VDDSHV_SDIO(2) (3)	External capacitor connection for SDIO LDO	CAP	H18
CAP_VDD_WKUP(1)	External capacitor connection for WKUP LDO	CAP	V9
VDDA_1P8_MON_WKUP	Supply monitor in WKUP domain	A	AB6
VDDA_1P8_SDIO(2)	SDIO LDO analog power supply	PWR	G17
VDDA_1P8_CSI0	CSI PHY analog power supply	PWR	L20, M21
VDDA_1P8_MON0	Supply monitor in MAIN domain	A	AC6
VDDA_1P8_OLDI0	OLDI analog power supply	PWR	L22
VDDA_1P8_SERDES0	SERDES0/1 (USB, PCIE) analog power supply	PWR	AA14, AB13, AB15
VDDA_3P3_IOLDO_WKUP	WKUP IO Bias LDO analog power supply	PWR	AB9
VDDA_3P3_MON_WKUP	Supply monitor in WKUP domain	A	U6
VDDA_3P3_SDIO(2)	SDIO LDO analog power supply	PWR	H17
VDDA_3P3_USB	USB analog power supply	PWR	AC12
VDDA_3P3_IOLDO0	IO Bias LDO analog power supply	PWR	G18
VDDA_3P3_IOLDO1	IO Bias LDO analog power supply	PWR	AA21
VDDA_3P3_MON0	Supply monitor in MAIN domain	A	AC10
VDDA_ADC_MCU	ADC0, ADC1 analog power supply	PWR	M7, M9
VDDA_LDO_WKUP	WKUP LDO analog power supply	PWR	AB8
VDDA_MCU	MCU SRAM LDO, MCU DPLL, CPSW DPLL analog power supply	PWR	U12
VDDA_PLL0_DDR	DDR DPLL analog power supply	PWR	H15
VDDA_PLL1_DDR	DDR De-skew DPLL analog power supply	PWR	H11
VDDA_PLL_CORE	CORE DPLL, PER1 DPLL analog power supply	PWR	Y17
VDDA_PLL_DSS	DSS DPLL analog power supply	PWR	L21
VDDA_PLL_MPU0	MPU0 DPLL analog power supply	PWR	L12
VDDA_PLL_MPU1	MPU1 DPLL analog power supply	PWR	K15
VDDA_PLL_PER0	PER0 DPLL analog power supply	PWR	AB7
VDDA_POR_WKUP(5)	WKUP POR/POK analog power supply	PWR	Y9
VDDA_SRAM_CORE0	CORE SRAM LDOs analog power supply	PWR	M19
VDDA_SRAM_CORE1	CORE SRAM LDOs analog power supply	PWR	V16
VDDA_SRAM_MPU0	MPU SRAM LDOs analog power supply	PWR	K7
VDDA_SRAM_MPU1	MPU SRAM LDOs analog power supply	PWR	L18
VDDA_VSYS_MON(6)	Supply monitor for system	A	AC11
VDDA_WKUP	WKUP High/Low Frequency Oscillator (WKUP_LFOSC0 / WKUP_OSC0), SRAM LDO analog power supply	PWR	AA9

Copyright © 2023 Texas Instruments Incorporated

Table 5-75. Power Supply Signal Description (continued)

SIGNAL NAME [1]	DESCRIPTION [2]	PIN TYPE [3]	BALL [4]
VDDS0	IO bias supply for VDDSHV0	PWR	G12
VDDS0_WKUP	IO bias supply for VDDSHV0_WKUP	PWR	V8
VDDS1	IO bias supply for VDDSHV1	PWR	AA16
VDDS1_WKUP	IO bias supply for VDDSHV1_WKUP	PWR	T9
VDDS2	IO bias supply for VDDSHV2	PWR	P20
VDDS2_WKUP	IO bias supply for VDDSHV2_WKUP	PWR	N8
VDDS3	IO bias supply for VDDSHV3	PWR	T20
VDDS4	IO bias supply for VDDSHV4	PWR	Y20
VDDS5	IO bias supply for VDDSHV5	PWR	AC18
VDDS6	IO bias supply for VDDSHV6	PWR	F20
VDDS7	IO bias supply for VDDSHV7	PWR	K20
VDDS8	IO bias supply for VDDSHV8	PWR	AA10
VDDSHV0	Dual-voltage IO domain power supply	PWR	G15, H16
VDDSHV0_WKUP	Dual-voltage IO domain power supply	PWR	U8, V7, W8, Y7
VDDSHV1	Dual-voltage IO domain power supply	PWR	AA18, AB17
VDDSHV1_WKUP	Dual-voltage IO domain power supply	PWR	R6, R8, T7
VDDSHV2	Dual-voltage IO domain power supply	PWR	N20, N22, P21, R20, R22
VDDSHV2_WKUP	Dual-voltage IO domain power supply	PWR	N6, P7, P9
VDDSHV3	Dual-voltage IO domain power supply	PWR	T21, U20, U22, V21, V23
VDDSHV4	Dual-voltage IO domain power supply	PWR	AA22, W20, W22, Y21, Y23
VDDSHV5	Dual-voltage IO domain power supply	PWR	AA20, AB19, AB21, AB23
VDDSHV6	Dual-voltage IO domain power supply	PWR	G20, H19, H21
VDDSHV7	Dual-voltage IO domain power supply	PWR	J20, J22, K21
VDDSHV8	Dual-voltage IO domain power supply	PWR	AB11
VDDS_DDR	DDR IO domain power supply	PWR	G10, G14, G8, H13, H7, H9
VDDS_OSC1	MAIN High Frequency Oscillator (OSC1) analog power supply	PWR	J16
VDD_CORE	CORE voltage domain supply	PWR	AA12, J10, J12, J14, J19, J8, K13, L14, L19, M13, N14, P13, P15, P19, R14, R16, R18, T13, T15, T17, T19, U14, U16, U18, V13, V15, V19, W14, W18, Y11, Y13, Y15
VDD_DLL_MMC0	MMC0 PHY DLL voltage supply	PWR	G22
VDD_DLL_MMC1	MMC1 PHY DLL voltage supply	PWR	H23
VDD_MCU	MCU voltage domain supply	PWR	N10, P11, R10, R12, T11
VDD_MPU0	MPU0 voltage domain supply	PWR	K11, K9, L10, L8, M11
VDD_MPU1	MPU1 voltage domain supply	PWR	K16, K18, L17, M16, M18, N17
VDD_WKUP0(4)	WKUP voltage domain supply	PWR	V11, W10, W12
VDD_WKUP1(4)	WKUP voltage domain supply	PWR	M22

Copyright © 2023 Texas Instruments Incorporated

Table 5-75. Power Supply Signal Description (continued)

SIGNAL NAME [1]	DESCRIPTION [2]	PIN TYPE [3]	BALL [4]
VSS	Ground	GND	A1, A2, A28, AA11, AA13, AA15, AA17, AA19, AA23, AA26, AA7, AB10, AB12, AB14, AB16, AB18, AB20, AB22, AD4, AE10, AE25, AE5, AF15, AF2, AF20, AF8, AG1, AG10, AG28, AG4, AG7, AH1, AH11, AH2, AH27, AH28, AH5, AH8, B12, B15, B20, B6, B9, D22, E26, E28, E4, F14, F19, F22, F25, F27, F3, G11, G13, G16, G2, G21, G23, G7, G9, H1, H10, H12, H14, H20, H22, H24, H26, H28, H6, H8, J11, J13, J15, J18, J21, J23, J25, J27, J7, J9, K1, K10, K12, K14, K17, K19, K22, K23, K6, K8, L11, L13, L16, L23, L24, L26, L28, L3, L7, L9, M10, M15, M17, M20, M8, N11, N13, N16, N19, N21, N7, N9, P10, P12, P14, P16, P18, P22, P6, P8, R11, R13, R15, R17, R19, R21, R7, R9, T10, T12, T14, T16, T18, T22, T26, T8, U11, U13, U15, U17, U19, U21, U3, U7, U9, V10, V12, V14, V18, V20, V22, V6, W11, W13, W15, W17, W19, W21, W23, W7, W9, Y12, Y14, Y16, Y18, Y22, Y6, Y8

(1) This pin must always be connected via a 1-µF capacitor to VSS.
(2) The net connecting CAP_VDDA_1P8_SDIO and VDDA_1P8_SDIO to VDDS6 or VDDS7 must be connected to a 3.3-uF decoupling capacitor. VDDA_1P8_SDIO, CAP_VDDA_1P8_SDIO, CAP_VDDSHV_SDIO, and VDDA_3P3_SDIO must be connected to VSS, when SDIO_LDO is not used with either MMC0 or MMC1.
(3) When CAP_VDDSHV_SDIO is connected to VDDSHV6 or VDDSHV7, the entire net which connects these pins should not exceed 6-uF of decoupling capacitance. VDDA_1P8_SDIO, CAP_VDDA_1P8_SDIO, CAP_VDDSHV_SDIO, and VDDA_3P3_SDIO must be connected to VSS, when SDIO_LDO is not used with either MMC0 or MMC1.
(4) These power rails should be connected together on the board level.
(5) VDDA_POR_WKUP is preferred to be connected to CAP_VDDA_1P8_IOLDO_WKUP when using internal POR feature.
(6) The VDDA_VSYS_MON pin provides a way to monitor the system power supply and is not fail-safe, unless implemented with the appropriate resistor voltage divider source. For more information, see Section 8.2.5, *System Power Supply Monitor Design Guidelines.*

Copyright © 2023 Texas Instruments Incorporated

5.4 Pin Multiplexing

Table 5-76 describes the device pin multiplexing associated with pins.

Note

Many device pins support multiple signal functions. Some signal functions are selected via a single layer of multiplexers associated with pins. Other signal functions are selected via two or more layers of multiplexers, where one layer is associated with the pins and other layers are associated with peripheral logic functions.

Table 5-76, *Pin Multiplexing* only describes signal multiplexing at the pins. For more information, related to signal multiplexing at the pins, see section *Pad Configuration Registers* in the device TRM. Refer to the respective peripheral chapter in the device TRM for information associated with peripheral signal multiplexing.

Note

When a pad is set into a pin multiplexing mode which is not defined, that pad's behavior is undefined. This should be avoided.

Note

Table 5-76, *Pin Multiplexing* does not include SerDes signal functions. For more information, see section *Serializer/Deserializer (SerDes)* in the device TRM.

Note

The PRU_ICSSG contains a second layer of multiplexing to enable additional functionality on the PRU GPO and GPI signals. This internal wrapper multiplexing is described in the PRU_ICSSG chapter in the device TRM.

For more information on the I/O cell configurations, see section *Pad Configuration Registers* in the device TRM.

Table 5-76. Pin Multiplexing

ADDRESS	REGISTER NAME	BALL NUMBER	MUXMODE[7:0] SETTINGS								
			0	1	2	3	4	5	6	7	Bootstrap
0x0011C000	CTRLMMR_PADCONFIG0	M27	GPMC0_AD0	VOUT1_DATA0	VIN0_DATA12					GPIO0_0	BOOTMODE00
0x0011C004	CTRLMMR_PADCONFIG1	M23	GPMC0_AD1	VOUT1_DATA1	VIN0_DATA13					GPIO0_1	BOOTMODE01
0x0011C008	CTRLMMR_PADCONFIG2	M28	GPMC0_AD2	VOUT1_DATA2	VIN0_DATA14					GPIO0_2	BOOTMODE02
0x0011C00C	CTRLMMR_PADCONFIG3	M24	GPMC0_AD3	VOUT1_DATA3	VIN0_DATA15					GPIO0_3	BOOTMODE03
0x0011C010	CTRLMMR_PADCONFIG4	N24	GPMC0_AD4	VOUT1_DATA4						GPIO0_4	BOOTMODE04
0x0011C014	CTRLMMR_PADCONFIG5	N27	GPMC0_AD5	VOUT1_DATA5						GPIO0_5	BOOTMODE05
0x0011C018	CTRLMMR_PADCONFIG6	N28	GPMC0_AD6	VOUT1_DATA6						GPIO0_6	BOOTMODE06
0x0011C01C	CTRLMMR_PADCONFIG7	M25	GPMC0_AD7	VOUT1_DATA7						GPIO0_7	BOOTMODE07

Copyright © 2023 Texas Instruments Incorporated

Table 5-76. Pin Multiplexing (continued)

ADDRESS	REGISTER NAME	BALL NUMBER	MUXMODE[7:0] SETTINGS								
			0	1	2	3	4	5	6	7	Bootstrap
0x0011C020	CTRLMMR_PADCONFIG8	N23	GPMC0_AD8	VOUT1_DATA8	VIN0_DATA0	PRG2_PRU0_GPO12	PRG2_PRU0_GPI12	PRG2_PWM2_A0		GPIO0_8	BOOTMODE08
0x0011C024	CTRLMMR_PADCONFIG9	M26	GPMC0_AD9	VOUT1_DATA9	VIN0_DATA1	PRG2_PRU0_GPO13	PRG2_PRU0_GPI13	PRG2_PWM2_B0		GPIO0_9	BOOTMODE09
0x0011C028	CTRLMMR_PADCONFIG10	P28	GPMC0_AD10	VOUT1_DATA10	VIN0_DATA2	PRG2_PRU0_GPO14	PRG2_PRU0_GPI14		PRG2_PWM0_TZ_IN	GPIO0_10	BOOTMODE10
0x0011C02C	CTRLMMR_PADCONFIG11	P27	GPMC0_AD11	VOUT1_DATA11	VIN0_DATA3	PRG2_PRU0_GPO15	PRG2_PRU0_GPI15	PRG2_PWM2_A1		GPIO0_11	BOOTMODE11
0x0011C030	CTRLMMR_PADCONFIG12	N26	GPMC0_AD12	VOUT1_DATA12	VIN0_DATA4	PRG2_PRU1_GPO12	PRG2_PRU1_GPI12	PRG2_PWM2_B1		GPIO0_12	BOOTMODE12
0x0011C034	CTRLMMR_PADCONFIG13	N25	GPMC0_AD13	VOUT1_DATA13	VIN0_DATA5	PRG2_PRU1_GPO13	PRG2_PRU1_GPI13	PRG2_PWM2_A2		GPIO0_13	BOOTMODE13
0x0011C038	CTRLMMR_PADCONFIG14	P24	GPMC0_AD14	VOUT1_DATA14	VIN0_DATA6	PRG2_PRU1_GPO14	PRG2_PRU1_GPI14		PRG2_PWM0_TZ_OUT	GPIO0_14	BOOTMODE14
0x0011C03C	CTRLMMR_PADCONFIG15	R27	GPMC0_AD15	VOUT1_DATA15	VIN0_DATA7	PRG2_PRU1_GPO15	PRG2_PRU1_GPI15	PRG2_PWM2_B2		GPIO0_15	BOOTMODE15
0x0011C040	CTRLMMR_PADCONFIG16	R28	GPMC0_CLK	VOUT1_DATA16	VIN0_PCLK	GPMC0_FCLK_MUX				GPIO0_16	
0x0011C044	CTRLMMR_PADCONFIG17	P25	GPMC0_ADVn_ALE	VOUT1_DATA17						GPIO0_17	BOOTMODE16
0x0011C048	CTRLMMR_PADCONFIG18	P26	GPMC0_OEn_REn	VOUT1_DATA18						GPIO0_18	BOOTMODE17
0x0011C04C	CTRLMMR_PADCONFIG19	U28	GPMC0_WEn	VOUT1_DATA19						GPIO0_19	BOOTMODE18
0x0011C050	CTRLMMR_PADCONFIG20	T28	GPMC0_BE0n_CLE	VOUT1_DATA20						GPIO0_20	
0x0011C054	CTRLMMR_PADCONFIG21	P23	GPMC0_BE1n	VOUT1_DATA21	VIN0_HD	PRG2_PRU0_GPO17	PRG2_PRU0_GPI17	TIMER_IO2	PRG2_PWM2_TZ_IN	GPIO0_21	
0x0011C058	CTRLMMR_PADCONFIG22	R26	GPMC0_WAIT0	VOUT1_DATA22						GPIO0_22	
0x0011C05C	CTRLMMR_PADCONFIG23	R23	GPMC0_WAIT1	VOUT1_DATA23	VIN0_VD	PRG2_PWM1_A0	PRG2_IEP1_EDC_LATCH_IN0	TIMER_IO3	PRG2_IEP0_EDIO_DATA_IN_OUT28	GPIO0_23	
0x0011C060	CTRLMMR_PADCONFIG24	T25	GPMC0_WPn	VOUT1_VSYNC						GPIO0_24	
0x0011C064	CTRLMMR_PADCONFIG25	T24	GPMC0_DIR	VOUT1_HSYNC	VIN0_DATA8	PRG2_PWM1_B0	PRG2_IEP1_EDC_SYNC_OUT0	TIMER_IO6	PRG2_IEP0_EDIO_DATA_IN_OUT29	GPIO0_25	
0x0011C068	CTRLMMR_PADCONFIG26	R24	GPMC0_CSn0	VOUT1_PCLK						GPIO0_26	
0x0011C06C	CTRLMMR_PADCONFIG27	T23	GPMC0_CSn1	VOUT1_DE	VIN0_DATA9	PRG2_PRU1_GPO17	PRG2_PRU1_GPI17	TIMER_IO7	PRG2_PWM2_TZ_OUT	GPIO0_27	
0x0011C070	CTRLMMR_PADCONFIG28	R25	GPMC0_CSn2	VOUT1_EXTPCLKIN	VIN0_DATA10	GPMC0_A27	PRG2_IEP1_EDC_LATCH_IN1	I2C2_SDA	PRG2_IEP0_EDIO_DATA_IN_OUT30	GPIO0_28	
0x0011C074	CTRLMMR_PADCONFIG29	T27	GPMC0_CSn3		VIN0_DATA11	GPMC0_A26	PRG2_IEP1_EDC_SYNC_OUT1	I2C2_SCL	PRG2_IEP0_EDIO_DATA_IN_OUT31	GPIO0_29	
0x0011C078	CTRLMMR_PADCONFIG30	AF18	PRG2_PRU0_GPO0	PRG2_PRU0_GPI0	PRG2_RGMII1_RD0	GPMC0_A25	TRC_CLK	EHRPWM0_SYNCI	PRG2_PWM3_A0	GPIO0_30	
0x0011C07C	CTRLMMR_PADCONFIG31	AE18	PRG2_PRU0_GPO1	PRG2_PRU0_GPI1	PRG2_RGMII1_RD1	GPMC0_A24	TRC_CTL	EHRPWM0_SYNCO	SYNC2_OUT	GPIO0_31	
0x0011C080	CTRLMMR_PADCONFIG32	AH17	PRG2_PRU0_GPO2	PRG2_PRU0_GPI2	PRG2_RGMII1_RD2	GPMC0_A23	TRC_DATA0	EHRPWM_TZn_IN0	SYNC3_OUT	GPIO0_32	

Copyright © 2023 Texas Instruments Incorporated

Table 5-76. Pin Multiplexing (continued)

ADDRESS	REGISTER NAME	BALL NUMBER	MUXMODE[7:0] SETTINGS								
			0	1	2	3	4	5	6	7	Bootstrap
0x0011C084	CTRLMMR_PADCONFIG33	AG18	PRG2_PRU0_GPO3	PRG2_PRU0_GPI3	PRG2_RGMII1_RD3	GPMC0_A22	TRC_DATA1	EHRPWM0_A	PRG2_PWM3_B0	GPIO0_33	
0x0011C088	CTRLMMR_PADCONFIG34	AG17	PRG2_PRU0_GPO4	PRG2_PRU0_GPI4	PRG2_RGMII1_RX_CTL	GPMC0_A21	TRC_DATA2	EHRPWM0_B	PRG2_PWM0_A0	GPIO0_34	
0x0011C08C	CTRLMMR_PADCONFIG35	AF17	PRG2_PRU0_GPO5	PRG2_PRU0_GPI5	PRG2_RGMII1_RXC	GPMC0_A20	TRC_DATA3	EHRPWM1_A	PRG2_PWM3_A1	GPIO0_35	
0x0011C090	CTRLMMR_PADCONFIG36	AE17	PRG2_PRU0_GPO6	PRG2_PRU0_GPI6	PRG2_RGMII1_TX_CTL	GPMC0_A19	TRC_DATA4	EHRPWM1_B	PRG2_PWM3_B1	GPIO0_36	
0x0011C094	CTRLMMR_PADCONFIG37	AC19	PRG2_PRU0_GPO7	PRG2_PRU0_GPI7	PRG2_MDIO0_MDIO	GPMC0_A18	TRC_DATA5	EHRPWM_TZn_IN1	EHRPWM_SOCA	GPIO0_37	
0x0011C098	CTRLMMR_PADCONFIG38	AH16	PRG2_PRU0_GPO8	PRG2_PRU0_GPI8	PRG2_RGMII1_TD0	GPMC0_A17	TRC_DATA6	EHRPWM2_A	PRG2_PWM0_B0	GPIO0_38	
0x0011C09C	CTRLMMR_PADCONFIG39	AG16	PRG2_PRU0_GPO9	PRG2_PRU0_GPI9	PRG2_RGMII1_TD1	GPMC0_A16	TRC_DATA7	EHRPWM2_B		GPIO0_39	
0x0011C0A0	CTRLMMR_PADCONFIG40	AF16	PRG2_PRU0_GPO10	PRG2_PRU0_GPI10	PRG2_RGMII1_TD2	GPMC0_A15	TRC_DATA8	EHRPWM_TZn_IN2	EHRPWM_SOCB	GPIO0_40	
0x0011C0A4	CTRLMMR_PADCONFIG41	AE16	PRG2_PRU0_GPO11	PRG2_PRU0_GPI11	PRG2_RGMII1_TD3	GPMC0_A14	TRC_DATA9		PRG2_ECAP0_IN_APWM_OUT	GPIO0_41	
0x0011C0A8	CTRLMMR_PADCONFIG42	AD16	PRG2_PRU0_GPO16	PRG2_PRU0_GPI16	PRG2_RGMII1_TXC	GPMC0_A13	TRC_DATA10		PRG2_PWM0_A1	GPIO0_42	
0x0011C0AC	CTRLMMR_PADCONFIG43	AH15	PRG2_PRU1_GPO0	PRG2_PRU1_GPI0	PRG2_RGMII2_RD0	GPMC0_A12	TRC_DATA11	EHRPWM3_A	PRG2_PWM3_A2	GPIO0_43	
0x0011C0B0	CTRLMMR_PADCONFIG44	AC16	PRG2_PRU1_GPO1	PRG2_PRU1_GPI1	PRG2_RGMII2_RD1	GPMC0_A11	TRC_DATA12	EHRPWM3_B	PRG2_PWM3_B2	GPIO0_44	
0x0011C0B4	CTRLMMR_PADCONFIG45	AD17	PRG2_PRU1_GPO2	PRG2_PRU1_GPI2	PRG2_RGMII2_RD2	GPMC0_A10	TRC_DATA13	EHRPWM3_SYNCI	PRG2_PWM0_B1	GPIO0_45	
0x0011C0B8	CTRLMMR_PADCONFIG46	AH14	PRG2_PRU1_GPO3	PRG2_PRU1_GPI3	PRG2_RGMII2_RD3	GPMC0_A9	TRC_DATA14	EHRPWM3_SYNCO		GPIO0_46	
0x0011C0BC	CTRLMMR_PADCONFIG47	AG14	PRG2_PRU1_GPO4	PRG2_PRU1_GPI4	PRG2_RGMII2_RX_CTL	GPMC0_A8	TRC_DATA15	EHRPWM_TZn_IN3	PRG2_ECAP0_SYNC_OUT	GPIO0_47	
0x0011C0C0	CTRLMMR_PADCONFIG48	AG15	PRG2_PRU1_GPO5	PRG2_PRU1_GPI5	PRG2_RGMII2_RXC	GPMC0_A7	TRC_DATA16	EHRPWM4_A		GPIO0_48	
0x0011C0C4	CTRLMMR_PADCONFIG49	AC17	PRG2_PRU1_GPO6	PRG2_PRU1_GPI6	PRG2_RGMII2_TX_CTL	GPMC0_A6	TRC_DATA17	EHRPWM4_B		GPIO0_49	
0x0011C0C8	CTRLMMR_PADCONFIG50	AE15	PRG2_PRU1_GPO7	PRG2_PRU1_GPI7	PRG2_MDIO0_MDC	GPMC0_A5	TRC_DATA18	EHRPWM_TZn_IN4	PRG2_PWM3_TZ_IN	GPIO0_50	
0x0011C0CC	CTRLMMR_PADCONFIG51	AD15	PRG2_PRU1_GPO8	PRG2_PRU1_GPI8	PRG2_RGMII2_TD0	GPMC0_A4	TRC_DATA19	EHRPWM5_A	PRG2_PWM0_A2	GPIO0_51	
0x0011C0D0	CTRLMMR_PADCONFIG52	AF14	PRG2_PRU1_GPO9	PRG2_PRU1_GPI9	PRG2_RGMII2_TD1	GPMC0_A3	TRC_DATA20	EHRPWM5_B	PRG2_PWM3_TZ_OUT	GPIO0_52	
0x0011C0D4	CTRLMMR_PADCONFIG53	AC15	PRG2_PRU1_GPO10	PRG2_PRU1_GPI10	PRG2_RGMII2_TD2	GPMC0_A2	TRC_DATA21	EHRPWM_TZn_IN5	PRG2_PWM0_B2	GPIO0_53	
0x0011C0D8	CTRLMMR_PADCONFIG54	AD14	PRG2_PRU1_GPO11	PRG2_PRU1_GPI11	PRG2_RGMII2_TD3	GPMC0_A1	TRC_DATA22		PRG2_ECAP0_SYNC_IN	GPIO0_54	
0x0011C0DC	CTRLMMR_PADCONFIG55	AE14	PRG2_PRU1_GPO16	PRG2_PRU1_GPI16	PRG2_RGMII2_TXC	GPMC0_A0	TRC_DATA23		PRG2_PWM1_TZ_OUT	GPIO0_55	
0x0011C0E0	CTRLMMR_PADCONFIG56	AE22	PRG1_PRU0_GPO0	PRG1_PRU0_GPI0	PRG1_RGMII1_RD0	PRG1_PWM3_A0				GPIO0_56	

Copyright © 2023 Texas Instruments Incorporated

Table 5-76. Pin Multiplexing (continued)

ADDRESS	REGISTER NAME	BALL NUMBER	MUXMODE[7:0] SETTINGS								
			0	1	2	3	4	5	6	7	Bootstrap
0x0011C0E4	CTRLMMR_PADCONFIG57	AG24	PRG1_PRU0_GPO1	PRG1_PRU0_GPI1	PRG1_RGMII1_RD1	PRG1_PWM3_B0				GPIO0_57	
0x0011C0E8	CTRLMMR_PADCONFIG58	AF23	PRG1_PRU0_GPO2	PRG1_PRU0_GPI2	PRG1_RGMII1_RD2	PRG1_PWM2_A0				GPIO0_58	
0x0011C0EC	CTRLMMR_PADCONFIG59	AD21	PRG1_PRU0_GPO3	PRG1_PRU0_GPI3	PRG1_RGMII1_RD3	PRG1_PWM3_A2				GPIO0_59	
0x0011C0F0	CTRLMMR_PADCONFIG60	AG23	PRG1_PRU0_GPO4	PRG1_PRU0_GPI4	PRG1_RGMII1_RX_CTL	PRG1_PWM2_B0				GPIO0_60	
0x0011C0F4	CTRLMMR_PADCONFIG61	AF27	PRG1_PRU0_GPO5	PRG1_PRU0_GPI5		PRG1_PWM3_B2				GPIO0_61	
0x0011C0F8	CTRLMMR_PADCONFIG62	AF22	PRG1_PRU0_GPO6	PRG1_PRU0_GPI6	PRG1_RGMII1_RXC	PRG1_PWM3_A1				GPIO0_62	
0x0011C0FC	CTRLMMR_PADCONFIG63	AG27	PRG1_PRU0_GPO7	PRG1_PRU0_GPI7	PRG1_IEP0_EDC_LATCH_IN1	PRG1_PWM3_B1				GPIO0_63	
0x0011C100	CTRLMMR_PADCONFIG64	AF28	PRG1_PRU0_GPO8	PRG1_PRU0_GPI8		PRG1_PWM2_A1				GPIO0_64	
0x0011C104	CTRLMMR_PADCONFIG65	AF26	PRG1_PRU0_GPO9	PRG1_PRU0_GPI9	PRG1_UART0_CTSn	PRG1_PWM3_TZ_IN	SPI2_CS1		PRG1_IEP0_EDIO_DATA_IN_OUT28	GPIO0_65	
0x0011C108	CTRLMMR_PADCONFIG66	AH25	PRG1_PRU0_GPO10	PRG1_PRU0_GPI10	PRG1_UART0_RTSn	PRG1_PWM2_B1	SPI2_CS2		PRG1_IEP0_EDIO_DATA_IN_OUT29	GPIO0_66	
0x0011C10C	CTRLMMR_PADCONFIG67	AF21	PRG1_PRU0_GPO11	PRG1_PRU0_GPI11	PRG1_RGMII1_TX_CTL	PRG1_PWM3_TZ_OUT		PRG1_PRU0_GPO15		GPIO0_67	
0x0011C110	CTRLMMR_PADCONFIG68	AH20	PRG1_PRU0_GPO12	PRG1_PRU0_GPI12	PRG1_RGMII1_TD0	PRG1_PWM0_A0		PRG1_PRU0_GPO11		GPIO0_68	
0x0011C114	CTRLMMR_PADCONFIG69	AH21	PRG1_PRU0_GPO13	PRG1_PRU0_GPI13	PRG1_RGMII1_TD1	PRG1_PWM0_B0		PRG1_PRU0_GPO12		GPIO0_69	
0x0011C118	CTRLMMR_PADCONFIG70	AG20	PRG1_PRU0_GPO14	PRG1_PRU0_GPI14	PRG1_RGMII1_TD2	PRG1_PWM0_A1		PRG1_PRU0_GPO13		GPIO0_70	
0x0011C11C	CTRLMMR_PADCONFIG71	AD19	PRG1_PRU0_GPO15	PRG1_PRU0_GPI15	PRG1_RGMII1_TD3	PRG1_PWM0_B1		PRG1_PRU0_GPO14		GPIO0_71	
0x0011C120	CTRLMMR_PADCONFIG72	AD20	PRG1_PRU0_GPO16	PRG1_PRU0_GPI16	PRG1_RGMII1_TXC	PRG1_PWM0_A2				GPIO0_72	
0x0011C124	CTRLMMR_PADCONFIG73	AH26	PRG1_PRU0_GPO17	PRG1_PRU0_GPI17	PRG1_IEP0_EDC_SYNC_OUT1	PRG1_PWM0_B2				GPIO0_73	
0x0011C128	CTRLMMR_PADCONFIG74	AG25	PRG1_PRU0_GPO18	PRG1_PRU0_GPI18	PRG1_IEP0_EDC_LATCH_IN0	PRG1_PWM0_TZ_IN				GPIO0_74	
0x0011C12C	CTRLMMR_PADCONFIG75	AG26	PRG1_PRU0_GPO19	PRG1_PRU0_GPI19	PRG1_IEP0_EDC_SYNC_OUT0	PRG1_PWM0_TZ_OUT				GPIO0_75	
0x0011C130	CTRLMMR_PADCONFIG76	AH24	PRG1_PRU1_GPO0	PRG1_PRU1_GPI0	PRG1_RGMII2_RD0					GPIO0_76	
0x0011C134	CTRLMMR_PADCONFIG77	AH23	PRG1_PRU1_GPO1	PRG1_PRU1_GPI1	PRG1_RGMII2_RD1					GPIO0_77	
0x0011C138	CTRLMMR_PADCONFIG78	AG21	PRG1_PRU1_GPO2	PRG1_PRU1_GPI2	PRG1_RGMII2_RD2	PRG1_PWM2_A2				GPIO0_78	
0x0011C13C	CTRLMMR_PADCONFIG79	AH22	PRG1_PRU1_GPO3	PRG1_PRU1_GPI3	PRG1_RGMII2_RD3		EQEP1_A			GPIO0_79	
0x0011C140	CTRLMMR_PADCONFIG80	AE21	PRG1_PRU1_GPO4	PRG1_PRU1_GPI4	PRG1_RGMII2_RX_CTL	PRG1_PWM2_B2	EQEP1_B			GPIO0_80	

Copyright © 2023 Texas Instruments Incorporated

Table 5-76. Pin Multiplexing (continued)

ADDRESS	REGISTER NAME	BALL NUMBER	MUXMODE[7:0] SETTINGS								
			0	1	2	3	4	5	6	7	Bootstrap
0x0011C144	CTRLMMR_PADCONFIG81	AC22	PRG1_PRU1_GPO5	PRG1_PRU1_GPI5			EQEP1_S			GPIO0_81	
0x0011C148	CTRLMMR_PADCONFIG82	AG22	PRG1_PRU1_GPO6	PRG1_PRU1_GPI6	PRG1_RGMII2_RXC					GPIO0_82	
0x0011C14C	CTRLMMR_PADCONFIG83	AD23	PRG1_PRU1_GPO7	PRG1_PRU1_GPI7	PRG1_IEP1_EDC_LATCH_IN1		SPI2_CS0		UART1_TXD	GPIO0_83	
0x0011C150	CTRLMMR_PADCONFIG84	AE24	PRG1_PRU1_GPO8	PRG1_PRU1_GPI8		PRG1_PWM2_TZ_OUT				GPIO0_84	
0x0011C154	CTRLMMR_PADCONFIG85	AF25	PRG1_PRU1_GPO9	PRG1_PRU1_GPI9	PRG1_UART0_RXD				PRG1_IEP0_EDIO_DATA_IN_OUT30	GPIO0_85	
0x0011C158	CTRLMMR_PADCONFIG86	AF24	PRG1_PRU1_GPO10	PRG1_PRU1_GPI10	PRG1_UART0_TXD	PRG1_PWM2_TZ_IN	SPI2_CS3		PRG1_IEP0_EDIO_DATA_IN_OUT31	GPIO0_86	
0x0011C15C	CTRLMMR_PADCONFIG87	AC20	PRG1_PRU1_GPO11	PRG1_PRU1_GPI11	PRG1_RGMII2_TX_CTL		EQEP1_I	PRG1_PRU1_GPO15		GPIO0_87	
0x0011C160	CTRLMMR_PADCONFIG88	AE20	PRG1_PRU1_GPO12	PRG1_PRU1_GPI12	PRG1_RGMII2_TD0	PRG1_PWM1_A0		PRG1_PRU1_GPO11		GPIO0_88	
0x0011C164	CTRLMMR_PADCONFIG89	AF19	PRG1_PRU1_GPO13	PRG1_PRU1_GPI13	PRG1_RGMII2_TD1	PRG1_PWM1_B0		PRG1_PRU1_GPO12		GPIO0_89	
0x0011C168	CTRLMMR_PADCONFIG90	AH19	PRG1_PRU1_GPO14	PRG1_PRU1_GPI14	PRG1_RGMII2_TD2	PRG1_PWM1_A1		PRG1_PRU1_GPO13		GPIO0_90	
0x0011C16C	CTRLMMR_PADCONFIG91	AG19	PRG1_PRU1_GPO15	PRG1_PRU1_GPI15	PRG1_RGMII2_TD3	PRG1_PWM1_B1		PRG1_PRU1_GPO14		GPIO0_91	
0x0011C170	CTRLMMR_PADCONFIG92	AE19	PRG1_PRU1_GPO16	PRG1_PRU1_GPI16	PRG1_RGMII2_TXC	PRG1_PWM1_A2				GPIO0_92	
0x0011C174	CTRLMMR_PADCONFIG93	AE23	PRG1_PRU1_GPO17	PRG1_PRU1_GPI17	PRG1_IEP1_EDC_SYNC_OUT1	PRG1_PWM1_B2	SPI2_CLK	PRG1_ECAP0_SYNC_OUT	UART1_RXD	GPIO0_93	
0x0011C178	CTRLMMR_PADCONFIG94	AD22	PRG1_PRU1_GPO18	PRG1_PRU1_GPI18	PRG1_IEP1_EDC_LATCH_IN0	PRG1_PWM1_TZ_IN	SPI2_D0	PRG1_ECAP0_SYNC_IN	UART1_CTSn	GPIO0_94	
0x0011C17C	CTRLMMR_PADCONFIG95	AC21	PRG1_PRU1_GPO19	PRG1_PRU1_GPI19	PRG1_IEP1_EDC_SYNC_OUT0	PRG1_PWM1_TZ_OUT	SPI2_D1	PRG1_ECAP0_IN_APWM_OUT	UART1_RTSn	GPIO0_95	
0x0011C180	CTRLMMR_PADCONFIG96	AD18	PRG1_MDIO0_MDIO	SPI1_CS2		PRG2_PWM1_A1				GPIO1_0	
0x0011C184	CTRLMMR_PADCONFIG97	AH18	PRG1_MDIO0_MDC	SPI1_CS3		PRG2_PWM1_B1				GPIO1_1	
0x0011C188	CTRLMMR_PADCONFIG98	D25	MMC0_DAT7	UART0_DCDn				EQEP2_A		GPIO1_2	
0x0011C18C	CTRLMMR_PADCONFIG99	B26	MMC0_DAT6	UART0_DSRn				EQEP2_B		GPIO1_3	
0x0011C190	CTRLMMR_PADCONFIG100	A24	MMC0_DAT5	UART0_DTRn				EQEP2_I		GPIO1_4	
0x0011C194	CTRLMMR_PADCONFIG101	E24	MMC0_DAT4	UART0_RIN				EQEP2_S		GPIO1_5	
0x0011C198	CTRLMMR_PADCONFIG102	A25	MMC0_DAT3							GPIO1_6	
0x0011C19C	CTRLMMR_PADCONFIG103	C26	MMC0_DAT2							GPIO1_7	
0x0011C1A0	CTRLMMR_PADCONFIG104	E25	MMC0_DAT1							GPIO1_8	
0x0011C1A4	CTRLMMR_PADCONFIG105	A26	MMC0_DAT0							GPIO1_9	
0x0011C1A8	CTRLMMR_PADCONFIG106	B25	MMC0_CLK							GPIO1_10	
0x0011C1AC	CTRLMMR_PADCONFIG107	B27	MMC0_CMD							GPIO1_11	
0x0011C1B0	CTRLMMR_PADCONFIG108	C25	MMC0_DS							GPIO1_12	

Copyright © 2023 Texas Instruments Incorporated

Table 5-76. Pin Multiplexing (continued)

ADDRESS	REGISTER NAME	BALL NUMBER	MUXMODE[7:0] SETTINGS								
			0	1	2	3	4	5	6	7	Bootstrap
0x0011C1B4	CTRLMMR_PADCONFIG109	A23	MMC0_SDCD						PRG2_IEP0_EDIO_OUTVALID	GPIO1_13	
0x0011C1B8	CTRLMMR_PADCONFIG110	B23	MMC0_SDWP							GPIO1_14	
0x0011C1BC	CTRLMMR_PADCONFIG111	AG13	SPI0_CS0							GPIO1_15	
0x0011C1C0	CTRLMMR_PADCONFIG112	AF13	SPI0_CS1	CPTS0_TS_COMP	I2C3_SCL				PRG1_IEP0_EDIO_OUTVALID	GPIO1_16	
0x0011C1C4	CTRLMMR_PADCONFIG113	AH13	SPI0_CLK							GPIO1_17	
0x0011C1C8	CTRLMMR_PADCONFIG114	AE13	SPI0_D0							GPIO1_18	
0x0011C1CC	CTRLMMR_PADCONFIG115	AD13	SPI0_D1							GPIO1_19	
0x0011C1D0	CTRLMMR_PADCONFIG116	AD12	SPI1_CS0			PRG2_IEP0_EDC_LATCH_IN0	PRG2_UART0_CTSn		PRG0_IEP0_EDIO_OUTVALID	GPIO1_20	
0x0011C1D4	CTRLMMR_PADCONFIG117	AG12	SPI1_CS1	CPTS0_TS_SYNC	I2C3_SDA					GPIO1_21	
0x0011C1D8	CTRLMMR_PADCONFIG118	AH12	SPI1_CLK			PRG2_IEP0_EDC_SYNC_OUT0	PRG2_UART0_RTSn			GPIO1_22	
0x0011C1DC	CTRLMMR_PADCONFIG119	AE12	SPI1_D0			PRG2_IEP0_EDC_LATCH_IN1	PRG2_UART0_RXD			GPIO1_23	
0x0011C1E0	CTRLMMR_PADCONFIG120	AF12	SPI1_D1			PRG2_IEP0_EDC_SYNC_OUT1	PRG2_UART0_TXD			GPIO1_24	
0x0011C1E4	CTRLMMR_PADCONFIG121	AF11	UART0_RXD							GPIO1_25	
0x0011C1E8	CTRLMMR_PADCONFIG122	AE11	UART0_TXD							GPIO1_26	
0x0011C1EC	CTRLMMR_PADCONFIG123	AG11	UART0_CTSn	TIMER_IO4	SPI0_CS2					GPIO1_27	
0x0011C1F0	CTRLMMR_PADCONFIG124	AD11	UART0_RTSn	TIMER_IO5	SPI0_CS3					GPIO1_28	
0x0011C1F4	CTRLMMR_PADCONFIG125	V24	PRG0_PRU0_GPO0	PRG0_PRU0_GPI0	PRG0_RGMII1_RD0	PRG0_PWM3_A0		MCASP0_ACLKX		GPIO1_29	
0x0011C1F8	CTRLMMR_PADCONFIG126	W25	PRG0_PRU0_GPO1	PRG0_PRU0_GPI1	PRG0_RGMII1_RD1	PRG0_PWM3_B0		MCASP0_AFSX		GPIO1_30	
0x0011C1FC	CTRLMMR_PADCONFIG127	W24	PRG0_PRU0_GPO2	PRG0_PRU0_GPI2	PRG0_RGMII1_RD2	PRG0_PWM2_A0		MCASP0_ACLKR		GPIO1_31	
0x0011C200	CTRLMMR_PADCONFIG128	AA27	PRG0_PRU0_GPO3	PRG0_PRU0_GPI3	PRG0_RGMII1_RD3	PRG0_PWM3_A2		MCASP0_AFSR		GPIO1_32	
0x0011C204	CTRLMMR_PADCONFIG129	Y24	PRG0_PRU0_GPO4	PRG0_PRU0_GPI4	PRG0_RGMII1_RX_CTL	PRG0_PWM2_B0		MCASP0_AXR0		GPIO1_33	
0x0011C208	CTRLMMR_PADCONFIG130	V28	PRG0_PRU0_GPO5	PRG0_PRU0_GPI5		PRG0_PWM3_B2		MCASP0_AXR1		GPIO1_34	
0x0011C20C	CTRLMMR_PADCONFIG131	Y25	PRG0_PRU0_GPO6	PRG0_PRU0_GPI6	PRG0_RGMII1_RXC	PRG0_PWM3_A1		MCASP0_AXR2		GPIO1_35	
0x0011C210	CTRLMMR_PADCONFIG132	U27	PRG0_PRU0_GPO7	PRG0_PRU0_GPI7	PRG0_IEP0_EDC_LATCH_IN1	PRG0_PWM3_B1	PRG0_ECAP0_SYNC_IN	MCASP0_AXR3		GPIO1_36	
0x0011C214	CTRLMMR_PADCONFIG133	V27	PRG0_PRU0_GPO8	PRG0_PRU0_GPI8		PRG0_PWM2_A1		MCASP0_AXR4		GPIO1_37	
0x0011C218	CTRLMMR_PADCONFIG134	V26	PRG0_PRU0_GPO9	PRG0_PRU0_GPI9	PRG0_UART0_CTSn	PRG0_PWM3_TZ_IN	SPI3_CS1	MCASP0_AXR5	PRG0_IEP0_EDIO_DATA_IN_OUT28	GPIO1_38	
0x0011C21C	CTRLMMR_PADCONFIG135	U25	PRG0_PRU0_GPO10	PRG0_PRU0_GPI10	PRG0_UART0_RTSn	PRG0_PWM2_B1	SPI3_CS2	MCASP0_AXR6	PRG0_IEP0_EDIO_DATA_IN_OUT29	GPIO1_39	

Copyright © 2023 Texas Instruments Incorporated

Table 5-76. Pin Multiplexing (continued)

ADDRESS	REGISTER NAME	BALL NUMBER	MUXMODE[7:0] SETTINGS								
			0	1	2	3	4	5	6	7	Bootstrap
0x0011C220	CTRLMMR_PADCONFIG136	AB25	PRG0_PRU0_GPO11	PRG0_PRU0_GPI11	PRG0_RGMII1_TX_CTL	PRG0_PWM3_TZ_OUT	PRG0_PRU0_GPO15	MCASP0_AXR7		GPIO1_40	
0x0011C224	CTRLMMR_PADCONFIG137	AD27	PRG0_PRU0_GPO12	PRG0_PRU0_GPI12	PRG0_RGMII1_TD0	PRG0_PWM0_A0	PRG0_PRU0_GPO11	MCASP0_AXR8		GPIO1_41	
0x0011C228	CTRLMMR_PADCONFIG138	AC26	PRG0_PRU0_GPO13	PRG0_PRU0_GPI13	PRG0_RGMII1_TD1	PRG0_PWM0_B0	PRG0_PRU0_GPO12	MCASP0_AXR9		GPIO1_42	
0x0011C22C	CTRLMMR_PADCONFIG139	AD26	PRG0_PRU0_GPO14	PRG0_PRU0_GPI14	PRG0_RGMII1_TD2	PRG0_PWM0_A1	PRG0_PRU0_GPO13	MCASP0_AXR10		GPIO1_43	
0x0011C230	CTRLMMR_PADCONFIG140	AA24	PRG0_PRU0_GPO15	PRG0_PRU0_GPI15	PRG0_RGMII1_TD3	PRG0_PWM0_B1	PRG0_PRU0_GPO14	MCASP0_AXR11		GPIO1_44	
0x0011C234	CTRLMMR_PADCONFIG141	AD28	PRG0_PRU0_GPO16	PRG0_PRU0_GPI16	PRG0_RGMII1_TXC	PRG0_PWM0_A2		MCASP0_AXR12	MCASP1_AHCLKR	GPIO1_45	
0x0011C238	CTRLMMR_PADCONFIG142	U26	PRG0_PRU0_GPO17	PRG0_PRU0_GPI17	PRG0_IEP0_EDC_SYNC_OUT1	PRG0_PWM0_B2	PRG0_ECAP0_SYNC_OUT	MCASP0_AXR13	MCASP1_AHCLKX	GPIO1_46	
0x0011C23C	CTRLMMR_PADCONFIG143	V25	PRG0_PRU0_GPO18	PRG0_PRU0_GPI18	PRG0_IEP0_EDC_LATCH_IN0	PRG0_PWM0_TZ_IN	PRG0_ECAP0_IN_APWM_OUT	MCASP0_AXR14	MCASP2_AHCLKR	GPIO1_47	
0x0011C240	CTRLMMR_PADCONFIG144	U24	PRG0_PRU0_GPO19	PRG0_PRU0_GPI19	PRG0_IEP0_EDC_SYNC_OUT0	PRG0_PWM0_TZ_OUT		MCASP0_AXR15	MCASP2_AHCLKX	GPIO1_48	
0x0011C244	CTRLMMR_PADCONFIG145	AB28	PRG0_PRU1_GPO0	PRG0_PRU1_GPI0	PRG0_RGMII2_RD0			MCASP1_ACLKX		GPIO1_49	
0x0011C248	CTRLMMR_PADCONFIG146	AC28	PRG0_PRU1_GPO1	PRG0_PRU1_GPI1	PRG0_RGMII2_RD1			MCASP1_AFSX		GPIO1_50	
0x0011C24C	CTRLMMR_PADCONFIG147	AC27	PRG0_PRU1_GPO2	PRG0_PRU1_GPI2	PRG0_RGMII2_RD2	PRG0_PWM2_A2		MCASP1_ACLKR		GPIO1_51	
0x0011C250	CTRLMMR_PADCONFIG148	AB26	PRG0_PRU1_GPO3	PRG0_PRU1_GPI3	PRG0_RGMII2_RD3		EQEP0_A	MCASP1_AFSR		GPIO1_52	
0x0011C254	CTRLMMR_PADCONFIG149	AA25	PRG0_PRU1_GPO4	PRG0_PRU1_GPI4	PRG0_RGMII2_RX_CTL	PRG0_PWM2_B2	EQEP0_B	MCASP1_AXR0	MCASP0_AHCLKR	GPIO1_53	
0x0011C258	CTRLMMR_PADCONFIG150	U23	PRG0_PRU1_GPO5	PRG0_PRU1_GPI5			EQEP0_S	MCASP1_AXR1	MCASP0_AHCLKX	GPIO1_54	
0x0011C25C	CTRLMMR_PADCONFIG151	AB27	PRG0_PRU1_GPO6	PRG0_PRU1_GPI6	PRG0_RGMII2_RXC			MCASP1_AXR2		GPIO1_55	
0x0011C260	CTRLMMR_PADCONFIG152	W28	PRG0_PRU1_GPO7	PRG0_PRU1_GPI7	PRG0_IEP1_EDC_LATCH_IN1		SPI3_CS0	MCASP1_AXR3	UART2_TXD	GPIO1_56	
0x0011C264	CTRLMMR_PADCONFIG153	W27	PRG0_PRU1_GPO8	PRG0_PRU1_GPI8		PRG0_PWM2_TZ_OUT		MCASP1_AXR4		GPIO1_57	
0x0011C268	CTRLMMR_PADCONFIG154	Y28	PRG0_PRU1_GPO9	PRG0_PRU1_GPI9	PRG0_UART0_RXD		SPI3_CS3	MCASP1_AXR5	PRG0_IEP0_EDIO_DATA_IN_OUT30	GPIO1_58	
0x0011C26C	CTRLMMR_PADCONFIG155	AA28	PRG0_PRU1_GPO10	PRG0_PRU1_GPI10	PRG0_UART0_TXD	PRG0_PWM2_TZ_IN	EQEP0_I	MCASP1_AXR6	PRG0_IEP0_EDIO_DATA_IN_OUT31	GPIO1_59	
0x0011C270	CTRLMMR_PADCONFIG156	AB24	PRG0_PRU1_GPO11	PRG0_PRU1_GPI11	PRG0_RGMII2_TX_CTL		PRG0_PRU1_GPO15	MCASP1_AXR7		GPIO1_60	
0x0011C274	CTRLMMR_PADCONFIG157	AC25	PRG0_PRU1_GPO12	PRG0_PRU1_GPI12	PRG0_RGMII2_TD0	PRG0_PWM1_A0	PRG0_PRU1_GPO11	MCASP1_AXR8		GPIO1_61	
0x0011C278	CTRLMMR_PADCONFIG158	AD25	PRG0_PRU1_GPO13	PRG0_PRU1_GPI13	PRG0_RGMII2_TD1	PRG0_PWM1_B0	PRG0_PRU1_GPO12	MCASP1_AXR9		GPIO1_62	
0x0011C27C	CTRLMMR_PADCONFIG159	AD24	PRG0_PRU1_GPO14	PRG0_PRU1_GPI14	PRG0_RGMII2_TD2	PRG0_PWM1_A1	PRG0_PRU1_GPO13	MCASP2_AFSR		GPIO1_63	

Copyright © 2023 Texas Instruments Incorporated

Table 5-76. Pin Multiplexing (continued)

ADDRESS	REGISTER NAME	BALL NUMBER	MUXMODE[7:0] SETTINGS								
			0	1	2	3	4	5	6	7	Bootstrap
0x0011C280	CTRLMMR_PADCONFIG160	AE27	PRG0_PRU1_GPO15	PRG0_PRU1_GPI15	PRG0_RGMII2_TD3	PRG0_PWM1_B1	PRG0_PRU1_GPO14	MCASP2_ACLKR		GPIO1_64	
0x0011C284	CTRLMMR_PADCONFIG161	AC24	PRG0_PRU1_GPO16	PRG0_PRU1_GPI16	PRG0_RGMII2_TXC	PRG0_PWM1_A2		MCASP2_AXR0		GPIO1_65	
0x0011C288	CTRLMMR_PADCONFIG162	Y27	PRG0_PRU1_GPO17	PRG0_PRU1_GPI17	PRG0_IEP1_EDC_SYNC_OUT1	PRG0_PWM1_B2	SPI3_CLK	MCASP2_AXR1	UART2_RXD	GPIO1_66	
0x0011C28C	CTRLMMR_PADCONFIG163	Y26	PRG0_PRU1_GPO18	PRG0_PRU1_GPI18	PRG0_IEP1_EDC_LATCH_IN0	PRG0_PWM1_TZ_IN	SPI3_D0	MCASP2_AFSX	UART2_CTSn	GPIO1_67	
0x0011C290	CTRLMMR_PADCONFIG164	W26	PRG0_PRU1_GPO19	PRG0_PRU1_GPI19	PRG0_IEP1_EDC_SYNC_OUT0	PRG0_PWM1_TZ_OUT	SPI3_D1	MCASP2_ACLKX	UART2_RTSn	GPIO1_68	
0x0011C294	CTRLMMR_PADCONFIG165	AE26	PRG0_MDIO0_MDIO			PRG2_PWM1_A2		MCASP2_AXR2		GPIO1_69	
0x0011C298	CTRLMMR_PADCONFIG166	AE28	PRG0_MDIO0_MDC			PRG2_PWM1_B2		MCASP2_AXR3		GPIO1_70	
0x0011C29C	CTRLMMR_PADCONFIG167	F18	NMIn						PRG2_PWM1_TZ_IN		
0x0011C2A0	CTRLMMR_PADCONFIG168	F17	RESETz								
0x0011C2A4	CTRLMMR_PADCONFIG169	D19	RESETSTATz								
0x0011C2A8	CTRLMMR_PADCONFIG170	C19	PORz_OUT								
0x0011C2AC	CTRLMMR_PADCONFIG171	E20	SOC_SAFETY_ERRORn								
0x0011C2B0	CTRLMMR_PADCONFIG172	C20	TDI								
0x0011C2B4	CTRLMMR_PADCONFIG173	A20	TDO								
0x0011C2B8	CTRLMMR_PADCONFIG174	A21	TMS								
0x0011C2BC	CTRLMMR_PADCONFIG175	AD9	USB0_DRVVBUS							GPIO1_71	
0x0011C2C0	CTRLMMR_PADCONFIG176	AC8	USB1_DRVVBUS							GPIO1_72	
0x0011C2C4	CTRLMMR_PADCONFIG177	D27	MMC1_DAT3							GPIO1_73	
0x0011C2C8	CTRLMMR_PADCONFIG178	D26	MMC1_DAT2							GPIO1_74	
0x0011C2CC	CTRLMMR_PADCONFIG179	E27	MMC1_DAT1							GPIO1_75	
0x0011C2D0	CTRLMMR_PADCONFIG180	D28	MMC1_DAT0							GPIO1_76	
0x0011C2D4	CTRLMMR_PADCONFIG181	C27	MMC1_CLK							GPIO1_77	
0x0011C2D8	CTRLMMR_PADCONFIG182	C28	MMC1_CMD							GPIO1_78	
0x0011C2DC	CTRLMMR_PADCONFIG183	B24	MMC1_SDCD							GPIO1_79	
0x0011C2E0	CTRLMMR_PADCONFIG184	C24	MMC1_SDWP							GPIO1_80	
0x0011C2E8	CTRLMMR_PADCONFIG186	D20	I2C0_SCL								
0x0011C2EC	CTRLMMR_PADCONFIG187	C21	I2C0_SDA								
0x0011C2F0	CTRLMMR_PADCONFIG188	B21	I2C1_SCL	CPTS0_HW1TSPUSH							
0x0011C2F4	CTRLMMR_PADCONFIG189	E21	I2C1_SDA	CPTS0_HW2TSPUSH							
0x0011C2F8	CTRLMMR_PADCONFIG190	D21	ECAP0_IN_APWM_OUT	SYNC0_OUT	CPTS0_RFT_CLK					GPIO1_86	

Copyright © 2023 Texas Instruments Incorporated

Table 5-76. Pin Multiplexing (continued)

ADDRESS	REGISTER NAME	BALL NUMBER	MUXMODE[7:0] SETTINGS								
			0	1	2	3	4	5	6	7	Bootstrap
0x0011C2FC	CTRLMMR_PADCONFIG191	A22	EXT_REFCLK1	SYNC1_OUT						GPIO1_87	
0x0011C300	CTRLMMR_PADCONFIG192	B22	TIMER_IO0		SYSCLKOUT0					GPIO1_88	
0x0011C304	CTRLMMR_PADCONFIG193	C23	TIMER_IO1		OBSCLK0					GPIO1_89	
0x0011C308	CTRLMMR_PADCONFIG194	E19	PORz								
0x4301C000	CTRLMMR_WKUP_PADCONFIG0	V1	MCU_OSPI0_CLK	MCU_HYPERBUS0_CK						WKUP_GPIO0_12	
0x4301C004	CTRLMMR_WKUP_PADCONFIG1	U1	MCU_OSPI0_LBCLKO	MCU_HYPERBUS0_CKn						WKUP_GPIO0_13	
0x4301C008	CTRLMMR_WKUP_PADCONFIG2	U2	MCU_OSPI0_DQS	MCU_HYPERBUS0_RWDS						WKUP_GPIO0_14	
0x4301C00C	CTRLMMR_WKUP_PADCONFIG3	U4	MCU_OSPI0_D0	MCU_HYPERBUS0_DQ0						WKUP_GPIO0_15	
0x4301C010	CTRLMMR_WKUP_PADCONFIG4	U5	MCU_OSPI0_D1	MCU_HYPERBUS0_DQ1						WKUP_GPIO0_16	
0x4301C014	CTRLMMR_WKUP_PADCONFIG5	T2	MCU_OSPI0_D2	MCU_HYPERBUS0_DQ2						WKUP_GPIO0_17	
0x4301C018	CTRLMMR_WKUP_PADCONFIG6	T3	MCU_OSPI0_D3	MCU_HYPERBUS0_DQ3						WKUP_GPIO0_18	
0x4301C01C	CTRLMMR_WKUP_PADCONFIG7	T4	MCU_OSPI0_D4	MCU_HYPERBUS0_DQ4						WKUP_GPIO0_19	
0x4301C020	CTRLMMR_WKUP_PADCONFIG8	T5	MCU_OSPI0_D5	MCU_HYPERBUS0_DQ5						WKUP_GPIO0_20	
0x4301C024	CTRLMMR_WKUP_PADCONFIG9	R2	MCU_OSPI0_D6	MCU_HYPERBUS0_DQ6						WKUP_GPIO0_21	
0x4301C028	CTRLMMR_WKUP_PADCONFIG10	R3	MCU_OSPI0_D7	MCU_HYPERBUS0_DQ7						WKUP_GPIO0_22	
0x4301C02C	CTRLMMR_WKUP_PADCONFIG11	R4	MCU_OSPI0_CSn0	MCU_HYPERBUS0_CSn0						WKUP_GPIO0_23	
0x4301C030	CTRLMMR_WKUP_PADCONFIG12	R5	MCU_OSPI0_CSn1	MCU_HYPERBUS0_RESETn						WKUP_GPIO0_24	
0x4301C034	CTRLMMR_WKUP_PADCONFIG13	T1	MCU_OSPI1_CLK							WKUP_GPIO0_25	
0x4301C038	CTRLMMR_WKUP_PADCONFIG14	R1	MCU_OSPI1_LBCLKO	MCU_OSPI0_CSn2	MCU_HYPERBUS0_RESETOn					WKUP_GPIO0_26	
0x4301C03C	CTRLMMR_WKUP_PADCONFIG15	P2	MCU_OSPI1_DQS	MCU_OSPI0_CSn3	MCU_HYPERBUS0_INTn					WKUP_GPIO0_27	
0x4301C040	CTRLMMR_WKUP_PADCONFIG16	P3	MCU_OSPI1_D0							WKUP_GPIO0_28	
0x4301C044	CTRLMMR_WKUP_PADCONFIG17	P4	MCU_OSPI1_D1				MCU_UART0_RXD	MCU_SPI1_CS1		WKUP_GPIO0_29	
0x4301C048	CTRLMMR_WKUP_PADCONFIG18	P5	MCU_OSPI1_D2				MCU_UART0_TXD	MCU_SPI1_CS2		WKUP_GPIO0_30	
0x4301C04C	CTRLMMR_WKUP_PADCONFIG19	P1	MCU_OSPI1_D3				MCU_UART0_CTSn	MCU_SPI0_CS1		WKUP_GPIO0_31	
0x4301C050	CTRLMMR_WKUP_PADCONFIG20	N2	MCU_OSPI1_CSn0							WKUP_GPIO0_32	

Copyright © 2023 Texas Instruments Incorporated

Table 5-76. Pin Multiplexing (continued)

ADDRESS	REGISTER NAME	BALL NUMBER	MUXMODE[7:0] SETTINGS								
			0	1	2	3	4	5	6	7	Bootstrap
0x4301C054	CTRLMMR_WKUP_PADCONFIG21	N3	MCU_OSPI1_CSn1	MCU_HYPERBUS0_WPn	MCU_TIMER_IO0	MCU_HYPERBUS0_CSn1	MCU_UART0_RTSn	MCU_SPI0_CS2		WKUP_GPIO0_33	
0x4301C058	CTRLMMR_WKUP_PADCONFIG22	N4	MCU_RGMII1_TX_CTL	MCU_RMII1_CRS_DV						WKUP_GPIO0_34	
0x4301C05C	CTRLMMR_WKUP_PADCONFIG23	N5	MCU_RGMII1_RX_CTL	MCU_RMII1_RX_ER						WKUP_GPIO0_35	
0x4301C060	CTRLMMR_WKUP_PADCONFIG24	M2	MCU_RGMII1_TD3							WKUP_GPIO0_36	
0x4301C064	CTRLMMR_WKUP_PADCONFIG25	M3	MCU_RGMII1_TD2							WKUP_GPIO0_37	
0x4301C068	CTRLMMR_WKUP_PADCONFIG26	M4	MCU_RGMII1_TD1	MCU_RMII1_TXD1						WKUP_GPIO0_38	
0x4301C06C	CTRLMMR_WKUP_PADCONFIG27	M5	MCU_RGMII1_TD0	MCU_RMII1_TXD0						WKUP_GPIO0_39	
0x4301C070	CTRLMMR_WKUP_PADCONFIG28	N1	MCU_RGMII1_TXC	MCU_RMII1_TX_EN						WKUP_GPIO0_40	
0x4301C074	CTRLMMR_WKUP_PADCONFIG29	M1	MCU_RGMII1_RXC	MCU_RMII1_REF_CLK						WKUP_GPIO0_41	
0x4301C078	CTRLMMR_WKUP_PADCONFIG30	L2	MCU_RGMII1_RD3							WKUP_GPIO0_42	
0x4301C07C	CTRLMMR_WKUP_PADCONFIG31	L5	MCU_RGMII1_RD2							WKUP_GPIO0_43	
0x4301C080	CTRLMMR_WKUP_PADCONFIG32	M6	MCU_RGMII1_RD1	MCU_RMII1_RXD1						WKUP_GPIO0_44	
0x4301C084	CTRLMMR_WKUP_PADCONFIG33	L6	MCU_RGMII1_RD0	MCU_RMII1_RXD0						WKUP_GPIO0_45	
0x4301C088	CTRLMMR_WKUP_PADCONFIG34	L4	MCU_MDIO0_MDIO							WKUP_GPIO0_46	
0x4301C08C	CTRLMMR_WKUP_PADCONFIG35	L1	MCU_MDIO0_MDC							WKUP_GPIO0_47	
0x4301C090	CTRLMMR_WKUP_PADCONFIG36	Y1	MCU_SPI0_CLK							WKUP_GPIO0_48	MCU_BOOTMODE06
0x4301C094	CTRLMMR_WKUP_PADCONFIG37	Y3	MCU_SPI0_D0							WKUP_GPIO0_49	MCU_BOOTMODE07
0x4301C098	CTRLMMR_WKUP_PADCONFIG38	Y2	MCU_SPI0_D1							WKUP_GPIO0_50	MCU_BOOTMODE05
0x4301C09C	CTRLMMR_WKUP_PADCONFIG39	Y4	MCU_SPI0_CS0							WKUP_GPIO0_51	
0x4301C0A0	CTRLMMR_WKUP_PADCONFIG40	AB1	WKUP_UART0_RXD							WKUP_GPIO0_52	
0x4301C0A4	CTRLMMR_WKUP_PADCONFIG41	AB5	WKUP_UART0_TXD							WKUP_GPIO0_53	
0x4301C0A8	CTRLMMR_WKUP_PADCONFIG42	W1	MCU_MCAN0_TX							WKUP_GPIO0_54	
0x4301C0AC	CTRLMMR_WKUP_PADCONFIG43	W2	MCU_MCAN0_RX							WKUP_GPIO0_55	
0x4301C0B0	CTRLMMR_WKUP_PADCONFIG44	AF4	WKUP_GPIO0_0	MCU_SPI1_CLK						WKUP_GPIO0_0	MCU_BOOTMODE00

Copyright © 2023 Texas Instruments Incorporated

Table 5-76. Pin Multiplexing (continued)

ADDRESS	REGISTER NAME	BALL NUMBER	MUXMODE[7:0] SETTINGS								
			0	1	2	3	4	5	6	7	Bootstrap
0x4301C0B4	CTRLMMR_WKUP_PADCONFIG45	AF3	WKUP_GPIO0_1	MCU_SPI1_D0						WKUP_GPIO0_1	MCU_BOOTMODE01
0x4301C0B8	CTRLMMR_WKUP_PADCONFIG46	AE3	WKUP_GPIO0_2	MCU_SPI1_D1						WKUP_GPIO0_2	MCU_BOOTMODE02
0x4301C0BC	CTRLMMR_WKUP_PADCONFIG47	AD1	WKUP_GPIO0_3	MCU_SPI1_CS0						WKUP_GPIO0_3	MCU_BOOTMODE03
0x4301C0C0	CTRLMMR_WKUP_PADCONFIG48	AC3	WKUP_GPIO0_4	MCU_MCAN1_TX	MCU_SPI0_CS3	MCU_ADC_EXT_TRIGGER0				WKUP_GPIO0_4	MCU_BOOTMODE04
0x4301C0C4	CTRLMMR_WKUP_PADCONFIG49	AD3	WKUP_GPIO0_5	MCU_MCAN1_RX	MCU_SPI1_CS3	MCU_ADC_EXT_TRIGGER1				WKUP_GPIO0_5	
0x4301C0C8	CTRLMMR_WKUP_PADCONFIG50	AC2	WKUP_GPIO0_6	WKUP_UART0_CTSn	MCU_CPTS0_HW1TSPUSH					WKUP_GPIO0_6	
0x4301C0CC	CTRLMMR_WKUP_PADCONFIG51	AC1	WKUP_GPIO0_7	WKUP_UART0_RTSn	MCU_CPTS0_HW2TSPUSH					WKUP_GPIO0_7	
0x4301C0D0	CTRLMMR_WKUP_PADCONFIG52	AC5	WKUP_GPIO0_8		MCU_CPTS0_TS_SYNC					WKUP_GPIO0_8	MCU_BOOTMODE08
0x4301C0D4	CTRLMMR_WKUP_PADCONFIG53	AB4	WKUP_GPIO0_9		MCU_CPTS0_TS_COMP					WKUP_GPIO0_9	MCU_BOOTMODE09
0x4301C0D8	CTRLMMR_WKUP_PADCONFIG54	AB3	WKUP_GPIO0_10	MCU_EXT_REFCLK0			MCU_CPTS0_RFT_CLK	MCU_SYSCLKOUT0		WKUP_GPIO0_10	
0x4301C0DC	CTRLMMR_WKUP_PADCONFIG55	AB2	WKUP_GPIO0_11	MCU_OBSCLK0			MCU_TIMER_IO1		MCU_CLKOUT0	WKUP_GPIO0_11	
0x4301C0E0	CTRLMMR_WKUP_PADCONFIG56	AC7	WKUP_I2C0_SCL								
0x4301C0E4	CTRLMMR_WKUP_PADCONFIG57	AD6	WKUP_I2C0_SDA								
0x4301C0E8	CTRLMMR_WKUP_PADCONFIG58	AD8	MCU_I2C0_SCL								
0x4301C0EC	CTRLMMR_WKUP_PADCONFIG59	AD7	MCU_I2C0_SDA								
0x4301C0F0	CTRLMMR_WKUP_PADCONFIG60	AA5	PMIC_POWER_EN1								
0x4301C0F4	CTRLMMR_WKUP_PADCONFIG61	W3	MCU_SAFETY_ERRORn								
0x4301C0F8	CTRLMMR_WKUP_PADCONFIG62	W4	MCU_RESETz								
0x4301C0FC	CTRLMMR_WKUP_PADCONFIG63	V3	MCU_RESETSTATz								
0x4301C100	CTRLMMR_WKUP_PADCONFIG64	V2	MCU_PORz_OUT								
0x4301C104	CTRLMMR_WKUP_PADCONFIG65	AA4	TCK								
0x4301C108	CTRLMMR_WKUP_PADCONFIG66	AA3	TRSTn								
0x4301C10C	CTRLMMR_WKUP_PADCONFIG67	AA2	EMU0								
0x4301C110	CTRLMMR_WKUP_PADCONFIG68	AA1	EMU1								

Copyright © 2023 Texas Instruments Incorporated

Table 5-76. Pin Multiplexing (continued)

ADDRESS	REGISTER NAME	BALL NUMBER	MUXMODE[7:0] SETTINGS								
			0	1	2	3	4	5	6	7	Bootstrap
0x4301C114	CTRLMMR_WKUP_PADCONFIG69	Y5	PMIC_POWER_EN0								

Copyright © 2023 Texas Instruments Incorporated

5.5 Connections for Unused Pins

This section describes the Unused/Reserved balls connection requirements.

Note

All power balls must be supplied with the voltages specified in Section 6.4, *Recommended Operating Conditions,* unless otherwise specified in Section 5.3, *Signal Descriptions*.

Table 5-77. Unused Balls Specific Connection Requirements

BALL NUMBER	BALL NAME	CONNECTION REQUIREMENTS
C22	OSC1_XI	Each of these balls must be connected to VSS through a separate external pull resistor to ensure these balls are held to a valid logic low level if unused.
AE4	WKUP_LFOSC0_XI	
AA3	TRSTn	
K2	MCU_ADC0_REFN	
K3	MCU_ADC0_REFP	
V5	MCU_BYP_POR	
H2	MCU_ADC1_REFP	
H3	MCU_ADC1_REFN	
K5	MCU_ADC0_AIN0	
J3	MCU_ADC0_AIN1	
J1	MCU_ADC0_AIN2	
J5	MCU_ADC0_AIN3	
K4	MCU_ADC0_AIN4	
J4	MCU_ADC0_AIN5	
J2	MCU_ADC0_AIN6	
J6	MCU_ADC0_AIN7	
F4	MCU_ADC1_AIN0	
G6	MCU_ADC1_AIN1	
G4	MCU_ADC1_AIN2	
H5	MCU_ADC1_AIN3	
F5	MCU_ADC1_AIN4	
G5	MCU_ADC1_AIN5	
G3	MCU_ADC1_AIN6	
H4	MCU_ADC1_AIN7	

Copyright © 2023 Texas Instruments Incorporated

Table 5-77. Unused Balls Specific Connection Requirements (continued)

BALL NUMBER	BALL NAME	CONNECTION REQUIREMENTS
F17	RESETz	Each of these balls must be connected to the corresponding power supply through a separate external pull resistor to ensure these balls are held to a valid logic high level if unused.(1)
W4	MCU_RESETz	
W5	MCU_PORz	
E19	PORz	
AA4	TCK	
A21	TMS	
AC7	WKUP_I2C0_SCL	
AD6	WKUP_I2C0_SDA	
AD7	MCU_I2C0_SDA	
AD8	MCU_I2C0_SCL	
F18	NMIn	
C20	TDI	
A20	TDO	
AA1	EMU1	
AA2	EMU0	
F21	VPP_CORE	This ball must be left unconnected if unused.
T6	VPP_MCU	
AG5	SERDES0_REFCLKN	
AG6	SERDES0_REFCLKP	
AC9	SERDES0_REFRES	
AH3	SERDES0_RXN	
AG2	SERDES0_RXP	
AH4	SERDES0_TXN	
AG3	SERDES0_TXP	
AH6	SERDES1_REFCLKN	
AH7	SERDES1_REFCLKP	
AC14	SERDES1_REFRES	
AG9	SERDES1_RXN	
AH10	SERDES1_RXP	
AH9	SERDES1_TXN	
AG8	SERDES1_TXP	

(1) To determine which power supply is associated with any IO refer to Table 5-1, *Pin Attributes*.

Table 5-78. Reserved Balls Specific Connection Requirements

BALLS	CONNECTION REQUIREMENTS
AA6 (RSV2), B1 (RSV3), AC23 (RSV4), C12 (RSV5), F9 (RSV6), F10 (RSV7), AD10 (RSV8), AC13 (RSV9), B28 (RSV10), A27 (RSV11), D23 (RSV12), E23 (RSV13), W6 (TEMP_DIODE_P), F16 (DDR_FS_RESETn), D24 (MMC0_CALPAD), F23 (MMC1_CALPAD)	These balls must be left unconnected.
V4 (RSV1)	These balls must be connected to VSS through a separate external pull resistor to ensure these balls are held to a valid logic low level.

Copyright © 2023 Texas Instruments Incorporated

Note

All other unused signal balls **with** a Pad Configuration Register can be left unconnected with their multiplexing mode set to GPIO input and internal pulldown resistor enabled.

Unused balls are defined as those which only connect to a PCB solder pad. This is the only use case where internal pull resistors are allowed as the only source/sink to hold a valid logic level.

Any balls connected to a via, test point, or PCB trace are considered used and must not depend on the internal pull resistor to hold a valid logic level.

Internal pull resistors are weak and may not source enough current to maintain a valid logic level for some operating conditions. This may be the case when connected to components with leakage to the opposite logic level, or when external noise sources couple to signal traces attached to balls which are only pulled to a valid logic level by the internal resistor. Therefore, external pull resistors may be required to hold a valid logic level on balls with external connections.

If balls are allowed to float between valid logic levels, the input buffer may enter a high-current state which could damage the IO cell.

Copyright © 2023 Texas Instruments Incorporated

6 Specifications

6.1 Absolute Maximum Ratings

over operating free-air temperature range (unless otherwise noted)[1] [2]

PARAMETERS		MIN	MAX	UNIT
VDD_CORE	Supply voltage range for CORE domain	-0.3	1.3	V
VDD_MCU	Supply voltage range for R5F MCU domain	-0.3	1.3	V
VDD_MPU0	Supply voltage range for A53 MPU0 domain	-0.3	1.3	V
VDD_MPU1	Supply voltage range for A53 MPU1 domain	-0.3	1.3	V
VDD_WKUP0	Supply voltage range for WKUP domain	-0.3	1.3	V
VDD_WKUP1	Supply voltage range for WKUP domain	-0.3	1.3	V
VDD_DLL_MMC0	Supply voltage range for MMC0 DLL	-0.3	1.3	V
VDD_DLL_MMC1	Supply voltage range for MMC1 DLL	-0.3	1.3	V
VDDA_1P8_CSI0	Supply voltage range for CSI PHY, Analog, 1.8 V	-0.3	2.2	V
VDDA_1P8_OLDI0	Supply voltage range for OLDI, Analog, 1.8 V	-0.3	2.2	V
VDDA_1P8_SDIO	Supply voltage range for SDIO LDO, Analog, 1.8 V	-0.3	2.2	V
VDDA_1P8_SERDES0	Supply voltage range for USB, PCIE, Analog, 1.8 V	-0.3	2.2	V
VDDA_3P3_IOLDO_WKUP	Supply voltage range for WKUP IO Bias LDO, Analog, 3.3 V	-0.3	3.8	V
VDDA_3P3_IOLDO0	Supply voltage range for IO Bias LDO, Analog 3.3 V	-0.3	3.8	V
VDDA_3P3_IOLDO1	Supply voltage range for IO Bias LDO, Analog 3.3 V	-0.3	3.8	V
VDDA_3P3_SDIO	Supply voltage range for SDIO LDO, Analog, 3.3 V	-0.3	3.8	V
VDDA_3P3_USB	Supply voltage range for USBPHY, Analog, 3.3 V	-0.3	3.8	V
VDDA_ADC_MCU	Supply voltage range for ADC0, ADC1, Analog	-0.3	2.2	V
VDDA_PLL0_DDR	Supply voltage range for DDR DPLL, Analog	-0.3	2.2	V
VDDA_PLL1_DDR	Supply voltage range for DDR De-skew DPLL, Analog	-0.3	2.2	V
VDDA_LDO_WKUP	Supply voltage range for WKUP LDO, Analog	-0.3	2.2	V
VDDA_MCU	Supply voltage range for MCU SRAM LDO, MCU DPLL, CPSW DPLL, Analog	-0.3	2.2	V
VDDA_PLL_CORE	Supply voltage range for CORE DPLL, PER1 DPLL, Analog	-0.3	2.2	V
VDDA_PLL_DSS	Supply voltage range for DSS DPLL, Analog	-0.3	2.2	V
VDDA_PLL_MPU0	Supply voltage range for MPU0 DPLL, Analog	-0.3	2.2	V
VDDA_PLL_MPU1	Supply voltage range for MPU1 DPLL, Analog	-0.3	2.2	V
VDDA_PLL_PER0	Supply voltage range for PER0 DPLL, Analog	-0.3	2.2	V
VDDA_POR_WKUP	Supply voltage range for WKUP POR, Analog	-0.3	2.2	V
VDDA_SRAM_CORE0	Supply voltage range for CORE SRAM LDOs, Analog	-0.3	2.2	V
VDDA_SRAM_CORE1	Supply voltage range for CORE SRAM LDOs, Analog	-0.3	2.2	V
VDDA_SRAM_MPU0	Supply voltage range for MPU SRAM LDOs, Analog	-0.3	2.2	V
VDDA_SRAM_MPU1	Supply voltage range for MPU SRAM LDOs, Analog	-0.3	2.2	V
VDDA_WKUP	Supply voltage range for WKUP OSC, SRAM LDO, Analog	-0.3	2.2	V
VDDS_DDR	Supply voltage range for DDR IO domain	-0.3	2.2	V
VDDS_OSC1	Supply voltage range for CORE HFOSC, Analog	-0.3	2.2	V
VDDS0	Supply voltage range for VDDSHV0 IO bias	-0.3	2.2	V
VDDS0_WKUP	Supply voltage range for VDDSHV0_WKUP IO bias	-0.3	2.2	V
VDDS1	Supply voltage range for VDDSHV1 IO bias	-0.3	2.2	V
VDDS1_WKUP	Supply voltage range for VDDSHV1_WKUP IO bias	-0.3	2.2	V
VDDS2	Supply voltage range for VDDSHV2 IO bias	-0.3	2.2	V

Copyright © 2023 Texas Instruments Incorporated

over operating free-air temperature range (unless otherwise noted)[1] [2]

PARAMETERS			MIN	MAX	UNIT
VDDS2_WKUP	Supply voltage range for VDDSHV2_WKUP IO bias		-0.3	2.2	V
VDDS3	Supply voltage range for VDDSHV3 IO bias		-0.3	2.2	V
VDDS4	Supply voltage range for VDDSHV4 IO bias		-0.3	2.2	V
VDDS5	Supply voltage range for VDDSHV5 IO bias		-0.3	2.2	V
VDDS6	Supply voltage range for VDDSHV6 IO bias		-0.3	2.2	V
VDDS7	Supply voltage range for VDDSHV7 IO bias		-0.3	2.2	V
VDDS8	Supply voltage range for VDDSHV8 IO bias		-0.3	2.2	V
VDDSHV0	Supply voltage range for dual-voltage IO domain	1.8 V	-0.3	2.2	V
		3.3 V	-0.3	3.8	V
VDDSHV0_WKUP	Supply voltage range for dual-voltage IO domain	1.8 V	-0.3	2.2	V
		3.3 V	-0.3	3.8	V
VDDSHV1	Supply voltage range for dual-voltage IO domain	1.8 V	-0.3	2.2	V
		3.3 V	-0.3	3.8	V
VDDSHV1_WKUP	Supply voltage range for dual-voltage IO domain	1.8 V	-0.3	2.2	V
		3.3 V	-0.3	3.8	V
VDDSHV2	Supply voltage range for dual-voltage IO domain	1.8 V	-0.3	2.2	V
		3.3 V	-0.3	3.8	V
VDDSHV2_WKUP	Supply voltage range for dual-voltage IO domain	1.8 V	-0.3	2.2	V
		3.3 V	-0.3	3.8	V
VDDSHV3	Supply voltage range for dual-voltage IO domain	1.8 V	-0.3	2.2	V
		3.3 V	-0.3	3.8	V
VDDSHV4	Supply voltage range for dual-voltage IO domain	1.8 V	-0.3	2.2	V
		3.3 V	-0.3	3.8	V
VDDSHV5	Supply voltage range for dual-voltage IO domain	1.8 V	-0.3	2.2	V
		3.3 V	-0.3	3.8	V
VDDSHV6	Supply voltage range for dual-voltage IO domain	1.8 V	-0.3	2.2	V
		3.3 V	-0.3	3.8	V
VDDSHV7	Supply voltage range for dual-voltage IO domain	1.8 V	-0.3	2.2	V
		3.3 V	-0.3	3.8	V
VDDSHV8	Supply voltage range for dual-voltage IO domain	1.8 V	-0.3	2.2	V
		3.3 V	-0.3	3.8	V
VPP_CORE	Supply voltage range for CORE EFUSE domain			NC[8]	V
VPP_MCU	Supply voltage range for MCU EFUSE domain		-0.3	1.89	V
USB0_VBUS	Voltage range for USB VBUS comparator input		-0.3	1.89	V
USB1_VBUS	Voltage range for USB VBUS comparator input		-0.3	1.89	V
Steady State Max. Voltage at all fail-safe IO pins	I2C0_SCL, I2C0_SDA, I2C1_SCL, I2C1_SDA, NMIn, VDDA_3P3_MON_WKUP, VDDA_3P3_MON0		–0.3	3.8	V
	VDDA_1P8_MON_WKUP, VDDA_1P8_MON0		-0.3	2.2	V
	DDR_FS_RESETn		-0.3	2.2	V
Steady State Max. Voltage at all other IO pins[3]	VDDA_VSYS_MON[4]		-0.3	2.2[7]	V
	All other IO pins		-0.3	IO supply voltage + 0.3	V
Transient Overshoot and Undershoot specification at IO pin	20% of IO supply voltage for up to 20% of signal period (see Figure 6-1, *IO Transient Voltage Ranges*)			0.2 × VDD[5]	V

over operating free-air temperature range (unless otherwise noted)(1) (2)

PARAMETERS		MIN	MAX	UNIT
T_{STG} (6)	Storage temperature	-55	+150	°C

(1) Stresses beyond those listed under *Absolute Maximum Ratings* may cause permanent damage to the device. These are stress ratings only, and functional operation of the device at these or any other conditions beyond those indicated under Section 6.4, *Recommended Operating Conditions* is not implied. Exposure to absolute-maximum-rated conditions for extended periods may affect device reliability.
(2) All voltage values are with respect to their associated VSS or VSSA_x, unless otherwise noted.
(3) This parameter applies to all IO pins which are not fail-safe and the requirement applies to all values of IO supply voltage. For example, if the voltage applied to a specific IO supply is 0 volts the valid input voltage range for any IO powered by that supply will be –0.3 to +0.3 volts. Special attention should be applied anytime peripheral devices are not powered from the same power sources used to power the respective IO supply. It is important the attached peripheral never sources a voltage outside the valid input voltage range, including power supply ramp-up and ramp-down sequences.
(4) The VDDA_VSYS_MON pin provides a way to monitor the system power supply and is not fail-safe, unless implemented with the appropriate resistor voltage divider source. For more information, see Section 8.2.5, *System Power Supply Monitor Design Guidelines.*
(5) VDD is the voltage on the corresponding power-supply pin(s) for the IO.
(6) For tape and reel the storage temperature range is [–10°C; +50°C] with a maximum relative humidity of 70%. TI recommends returning to ambient room temperature before usage.
(7) The voltage on the VDDA_VSYS_MON pin should never exceed VDDA_POR_WKUP's voltage.
(8) NC stands for No Connect.

Fail-safe IO terminals are designed such they do not have dependencies on the respective IO power supply voltage. This allows external voltage sources to be connected to these IO terminals when the respective IO power supplies are turned off. The I2C0_SCL, I2C0_SDA, I2C1_SCL, I2C1_SDA, DDR_FS_RESETn, NMIn, VDDA_1P8_MON_WKUP, VDDA_1P8_MON0, VDDA_3P3_MON_WKUP, and VDDA_3P3_MON0 are the only fail-safe IO terminals. All other IO terminals are not fail-safe and the voltage applied to them should be limited to the value defined by the Steady State Max. Voltage at all IO pins parameter in Section 6.1, *Absolute Maximum Ratings*.

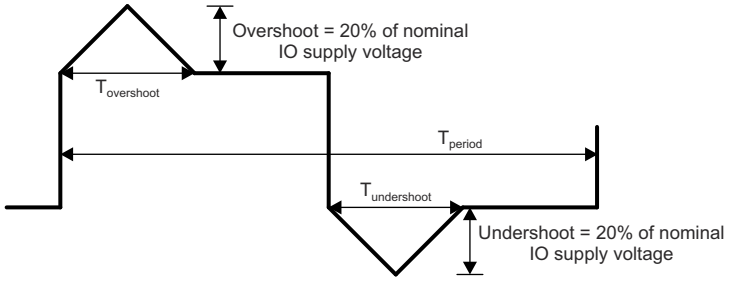

A. $T_{overshoot} + T_{undershoot} < 20\%$ of T_{period}

Figure 6-1. IO Transient Voltage Ranges

6.2 ESD Ratings

			VALUE	UNIT
$V_{(ESD)}$	Electrostatic discharge (ESD)	Human-body model (HBM), per ANSI/ESDA/JEDEC JS-001(1)	± 1000	V
		Charged-device model (CDM), per JEDEC specification ANSI/ESDA/JEDEC JS-002(2)	± 250	

(1) JEDEC document JEP155 states that 500-V HBM allows safe manufacturing with a standard ESD control process.
(2) JEDEC document JEP157 states that 250-V CDM allows safe manufacturing with a standard ESD control process.

Copyright © 2023 Texas Instruments Incorporated

6.3 Power-On Hours (POH)

OPERATING CONDITION(1) (2) (3)	COMMERCIAL TEMPERATURE RANGE		EXTENDED TEMPERATURE RANGE	
OPP	JUNCTION TEMPERATURE (T_j)	LIFETIME (POH)	JUNCTION TEMP (Tj)	LIFETIME (POH)
OPP_NOM	0°C to 90°C	100k	-40°C to 105°C	100k
OPP_OD		100k		100k
OPP_TURBO		100k		55k

(1) This information is provided solely for your convenience and does not extend or modify the warranty provided under TI's standard terms and conditions for TI semiconductor products.
(2) Unless specified in the table above, all voltage domains and operating conditions are supported in the device at the noted temperatures.
(3) POH is a function of voltage, temperature and time. Usage at higher voltages and temperatures will result in a reduction in POH.

6.4 Recommended Operating Conditions

over operating free-air temperature range (unless otherwise noted)(2)

SUPPLY NAME	DESCRIPTION		MIN(1)	NOM	MAX(1)	UNIT
VDD_CORE(3)	CORE voltage domain supply		1.05	1.1	1.15	V
VDD_MCU(3)	MCU voltage domain supply		1.05	1.1	1.15	V
VDD_MPU0(3)	MPU0 voltage domain supply	OPP_NOM	See Section 6.5			V
		OPP_OD	See Section 6.5			V
		OPP_TURBO	See Section 6.5			V
VDD_MPU1(3)	MPU1 voltage domain supply	OPP_NOM	See Section 6.5			V
		OPP_OD	See Section 6.5			V
		OPP_TURBO	See Section 6.5			V
VDD_WKUP0	WKUP voltage domain supply		1.05	1.1	1.15	V
VDD_WKUP1	WKUP voltage domain supply		1.05	1.1	1.15	V
VDD_DLL_MMC0	MMC0 PHY DLL voltage supply		1.05	1.1	1.15	V
VDD_DLL_MMC1	MMC1 PHY DLL voltage supply		1.05	1.1	1.15	V
VDDA_1P8_CSI0	CSI PHY analog power supply		1.71	1.8	1.89	V
VDDA_1P8_SDIO	SDIO LDO analog power supply		1.71	1.8	1.89	V
VDDA_1P8_OLDI0	OLDI analog power supply		1.71	1.8	1.89	V
VDDA_1P8_SERDES0	SERDES0/1 (USB, PCIE, SGMII) analog power supply		1.71	1.8	1.89	V
	Maximum peak-to-peak supply noise				30	mV_{PPmax}
VDDA_3P3_IOLDO_WKUP	WKUP IO Bias LDO analog power supply		3.14	3.3	3.46	V
VDDA_3P3_IOLDO0	IO Bias LDO analog power supply		3.14	3.3	3.46	V
VDDA_3P3_IOLDO1	IO Bias LDO analog power supply		3.14	3.3	3.46	V
VDDA_3P3_SDIO	SDIO LDO analog power supply		3.14	3.3	3.46	V
VDDA_3P3_USB	USB analog power supply		3.14	3.3	3.46	V
VDDA_1P8_MON_WKUP	1.8V supply monitor in WKUP domain		1.71	1.8	1.89	V
VDDA_1P8_MON0	1.8V supply monitor in MAIN domain		1.71	1.8	1.89	V
VDDA_3P3_MON_WKUP	3.3V supply monitor in WKUP domain		3.14	3.3	3.46	V
VDDA_3P3_MON0	3.3V supply monitor in MAIN domain		3.14	3.3	3.46	V
VDDA_VSYS_MON	Supply monitor for system		0	see(6)	1	V
VDDA_ADC_MCU	ADC0, ADC1 analog power supply		1.71	1.8	1.89	V
VDDA_LDO_WKUP	WKUP LDO analog power supply		1.71	1.8	1.89	V
VDDA_MCU	MCU SRAM LDO, MCU DPLL, CPSW DPLL analog power supply		1.71	1.8	1.89	V

Copyright © 2023 Texas Instruments Incorporated

over operating free-air temperature range (unless otherwise noted)[2]

SUPPLY NAME	DESCRIPTION		MIN[1]	NOM	MAX[1]	UNIT
VDDA_PLL_CORE	CORE DPLL, PER1 DPLL analog power supply		1.71	1.8	1.89	V
	Maximum peak-to-peak supply noise				50	mV_{PPmax}
VDDA_PLL0_DDR	DDR DPLL analog power supply		1.71	1.8	1.89	V
	Maximum peak-to-peak supply noise				50	mV_{PPmax}
VDDA_PLL1_DDR	DDR De-skew DPLL analog power supply		1.71	1.8	1.89	V
	Maximum peak-to-peak supply noise				50	mV_{PPmax}
VDDA_PLL_DSS	DSS DPLL analog power supply		1.71	1.8	1.89	V
	Maximum peak-to-peak supply noise				50	mV_{PPmax}
VDDA_PLL_MPU0	MPU0 DPLL analog power supply		1.71	1.8	1.89	V
	Maximum peak-to-peak supply noise				50	mV_{PPmax}
VDDA_PLL_MPU1	MPU1 DPLL analog power supply		1.71	1.8	1.89	V
	Maximum peak-to-peak supply noise				50	mV_{PPmax}
VDDA_PLL_PER0	PER0 DPLL analog power supply		1.71	1.8	1.89	V
	Maximum peak-to-peak supply noise				50	mV_{PPmax}
VDDA_POR_WKUP	WKUP POR/POK analog power supply		1.71	1.8	1.89	V
VDDA_SRAM_CORE0	CORE SRAM LDOs analog power supply		1.71	1.8	1.89	V
VDDA_SRAM_CORE1	CORE SRAM LDOs analog power supply		1.71	1.8	1.89	V
VDDA_SRAM_MPU0	MPU SRAM LDOs analog power supply		1.71	1.8	1.89	V
VDDA_SRAM_MPU1	MPU SRAM LDOs analog power supply		1.71	1.8	1.89	V
VDDA_WKUP	WKUP High/Low Frequency Oscillator (WKUP_LFOSC0 / WKUP_OSC0), SRAM LDO analog power supply		1.71	1.8	1.89	V
VDDS_DDR[4]	DDR IO domain power supply (DDR3L)		1.28	1.35	1.42	V
	DDR IO domain power supply (DDR4)		1.14	1.2	1.26	V
	DDR IO domain power supply (LPDDR4)		1.05	1.1	1.15	V
VDDS_OSC1	MAIN High Frequency Oscillator (OSC1) analog power supply		1.71	1.8	1.89	V
VDDS0	IO bias supply for VDDSHV0		1.71	1.8	1.89	V
VDDS0_WKUP	IO bias supply for VDDSHV0_WKUP		1.71	1.8	1.89	V
VDDS1	IO bias supply for VDDSHV1		1.71	1.8	1.89	V
VDDS1_WKUP	IO bias supply for VDDSHV1_WKUP		1.71	1.8	1.89	V
VDDS2	IO bias supply for VDDSHV2		1.71	1.8	1.89	V
VDDS2_WKUP	IO bias supply for VDDSHV2_WKUP		1.71	1.8	1.89	V
VDDS3	IO bias supply for VDDSHV3		1.71	1.8	1.89	V
VDDS4	IO bias supply for VDDSHV4		1.71	1.8	1.89	V
VDDS5	IO bias supply for VDDSHV5		1.71	1.8	1.89	V
VDDS6	IO bias supply for VDDSHV6		1.71	1.8	1.89	V
VDDS7	IO bias supply for VDDSHV7		1.71	1.8	1.89	V
VDDS8	IO bias supply for VDDSHV8		1.71	1.8	1.89	V
VDDSHV0	Dual-voltage IO domain power supply	1.8-V operation	1.71	1.8	1.89	V
		3.3-V operation	3.14	3.3	3.46	V
VDDSHV0_WKUP	Dual-voltage IO domain power supply	1.8-V operation	1.71	1.8	1.89	V
		3.3-V operation	3.14	3.3	3.46	V
VDDSHV1	Dual-voltage IO domain power supply	1.8-V operation	1.71	1.8	1.89	V
		3.3-V operation	3.14	3.3	3.46	V
VDDSHV1_WKUP	Dual-voltage IO domain power supply	1.8-V operation	1.71	1.8	1.89	V
		3.3-V operation	3.14	3.3	3.46	V

Copyright © 2023 Texas Instruments Incorporated

over operating free-air temperature range (unless otherwise noted)[2]

SUPPLY NAME	DESCRIPTION		MIN[1]	NOM	MAX[1]	UNIT
VDDSHV2	Dual-voltage IO domain power supply	1.8-V operation	1.71	1.8	1.89	V
		3.3-V operation	3.14	3.3	3.46	V
VDDSHV2_WKUP	Dual-voltage IO domain power supply	1.8-V operation	1.71	1.8	1.89	V
		3.3-V operation	3.14	3.3	3.46	V
VDDSHV3	Dual-voltage IO domain power supply	1.8-V operation	1.71	1.8	1.89	V
		3.3-V operation	3.14	3.3	3.46	V
VDDSHV4	Dual-voltage IO domain power supply	1.8-V operation	1.71	1.8	1.89	V
		3.3-V operation	3.14	3.3	3.46	V
VDDSHV5	Dual-voltage IO domain power supply	1.8-V operation	1.71	1.8	1.89	V
		3.3-V operation	3.14	3.3	3.46	V
VDDSHV6	Dual-voltage IO domain power supply	1.8-V operation	1.71	1.8	1.89	V
		3.3-V operation	3.14	3.3	3.46	V
VDDSHV7	Dual-voltage IO domain power supply	1.8-V operation	1.71	1.8	1.89	V
		3.3-V operation	3.14	3.3	3.46	V
VDDSHV8	Dual-voltage IO domain power supply	1.8-V operation	1.71	1.8	1.89	V
		3.3-V operation	3.14	3.3	3.46	V
USB0_VBUS	Voltage range for USB VBUS comparator input		0	see[7]	1.89	V
USB1_VBUS	Voltage range for USB VBUS comparator input		0	see[7]	1.89	V
USB0_ID	Voltage range for the USB ID input			see[5]		V
USB1_ID	Voltage range for the USB ID input			see[5]		V
VSS	Ground			0		V
T_J	Operating junction temperature range	Extended	-40		105	°C
		Commercial	0		90	°C

(1) The voltage at the device ball must never be below the MIN voltage or above the MAX voltage for any amount of time. This requirement includes dynamic voltage events such as AC ripple, voltage transients, voltage dips, and so forth.
(2) Refer to *Power-On-Hour (POH) Limits* for limitations.
(3) This value is without AVS. The AVS Voltages are device-dependent, voltage domain-dependent, and OPP-dependent. They must be read from the VTM_DEVINFO_VDn. For information about VTM_DEVINFO_VDn registers address, please refer to section *Voltage and Thermal Manager (VTM)* in the device TRM. The power supply should be adjustable over the following ranges for each required OPP:
- OPP_NOM: 0.9 V – 1.1 V
- OPP_OD: 0.9 V – 1.2 V
- OPP_TURBO: 0.9 V – 1.24 V

The AVS Voltages will be within the above specified ranges.
(4) VDDS_DDR is required to still be powered with either DDR4 voltage ranges, even If DDR interface is unused.
(5) This terminal is connected to analog circuits in the respective USB PHY. The circuit sources a known current while measuring the voltage to determine if the terminal is connected to VSS with a resistance less than 10 Ω or greater than 100 kΩ. The terminal should be connected to ground for USB host operation or open-circuit for USB peripheral operation, and should never be connected to any external voltage source.
(6) The VDDA_VSYS_MON pin provides a way to monitor the system power supply and is not fail-safe, unless implemented with the appropriate resistor voltage divider source. For more information, see Section 8.2.5, *System Power Supply Monitor Design Guidelines.*
(7) An external resistor divider is required to limit the voltage applied to this device pin. For more information, see Section 8.2.3, *USB Design Guidelines*.

Copyright © 2023 Texas Instruments Incorporated

6.5 Operating Performance Points

This section describes the operating conditions of the device. This section also contains the description of each operating performance point for processor clocks and device core clocks.

Note

The OPP voltage and frequency values may change following the silicon characterization result.

Table 6-1 describes the maximum supported frequency per speed grade for the device.

Table 6-1. Speed Grade Maximum Frequency

DEVICE(1)	MAXIMUM FREQUENCY (MHz)						
	MPU	MCU	DMSC	GPU	CBASS0	ICSSG	DDR4
AM6548xxX	1100	400	200	450	250	250	800 (DDR-1600)
AM6528xxX	1100	400	200	450	250	250	800 (DDR-1600)
AM6546xxX	1100	400	200	N/A	250	250	800 (DDR-1600)
AM6526xxX	1100	400	200	N/A	250	250	800 (DDR-1600)

(1) N/A stands for Not Applicable.

6.5.1 Voltage and Core Clock Specifications

Table 6-2 through Table 6-3 defines the device Operating Performance Points (OPPs). As shown in these tables, each OPP defines a voltage and frequency pair for a given voltage domain supply.

Note

This device, when used in a production system, only supports one static OPP over the lifetime of the device. When designing a production system, a fixed OPP should be selected based on the maximum frequency required by the system. The corresponding OPP voltage must then be exclusively used by the device.

Table 6-2. VDD_MPU0 OPPs

VDD_MPU0 OPPs(1)	VDD_MPU0			MPU0
	MIN	NOM	MAX	
OPP_NOM	1.06	1.1	1.16	800 MHz
OPP_OD	1.14	1.2	1.26	1 GHz
OPP_TURBO	1.2	1.24	1.28	1.1 GHz

(1) For additional details about supported AVS Voltages, refer to the footnotes associated with Section 6.4, *Recommended Operating Conditions*.

Table 6-3. VDD_MPU1 OPPs

VDD_MPU1 OPPs(1)	VDD_MPU1			MPU1
	MIN	NOM	MAX	
OPP_NOM	1.06	1.1	1.16	800 MHz
OPP_OD	1.14	1.2	1.26	1 GHz
OPP_TURBO	1.2	1.24	1.28	1.1 GHz

(1) For additional details about supported AVS Voltages, refer to the footnotes associated with Section 6.4, *Recommended Operating Conditions*.

Table 6-4 describes the standard processor clocks speed characteristics vs OPP of the device.

Copyright © 2023 Texas Instruments Incorporated

Table 6-4. Supported OPP vs Max Frequency

CLOCK(1) (2)	OPP_NOM	OPP_OD	OPP_TURBO
	MAXIMUM FREQUENCY (MHz)	MAXIMUM FREQUENCY (MHz)	MAXIMUM FREQUENCY (MHz)
VD_CORE			
GPU	450	N/A	N/A
DDR4	800 (DDR-1600)	N/A	N/A
CBASS0	250	N/A	N/A
ICSSG	250	N/A	N/A
VD_MPU0			
MPU0	800	1000	1100
VD_MPU1			
MPU1	800	1000	1100
VD_MCU			
MCU	400	N/A	N/A
VD_WKUP			
DMSC	200	N/A	N/A

(1) N/A stands for Not Applicable.
(2) Maximum supported frequency is limited to the device speed grade (see Table 6-1, *Speed Grade Maximum Frequency*).

Copyright © 2023 Texas Instruments Incorporated

6.6 Electrical Characteristics

Note

The interfaces or signals described in Section 6.6.1 through Section 6.6.5.1 correspond to the interfaces or signals available in multiplexing mode 0 (Primary Function).

All interfaces or signals multiplexed on the balls described in these tables have the same DC electrical characteristics, unless multiplexing involves a PHY and GPIO combination, in which case different DC electrical characteristics are specified for the different multiplexing modes (Functions).

6.6.1 I2C OPEN DRAIN DC Electrical Characteristics

over recommended operating conditions (unless otherwise noted)

PARAMETER		MIN	TYP	MAX	UNIT
BALL NAMES in Mode 0: WKUP_I2C0_SCL / WKUP_I2C0_SDA / MCU_I2C0_SCL / MCU_I2C0_SDA					
BALL NUMBERS: AC7 /AD6 / AD7 / AD8					
I2C STANDARD MODE / FAST MODE - VDDSHV0_WKUP = 1.8 V					
V_{IH}	High-level input threshold	0.7 × VDDSHV0_WKUP			V
V_{IL}	Low-level input threshold			0.3 × VDDSHV0_WKUP	V
V_{IHSS}	Input high-level Steady State(1)	0.70 × VDDSHV0_WKUP			V
V_{ILSS}	Input low-level Steady State(2)			0.30 × VDDSHV0_WKUP	V
V_{HYS}	Hysteresis	0.1 × VDDSHV0_WKUP			V
I_{IN}	Input leakage current. This value represents the maximum current flowing in or out of the pin while the output driver is disabled and the input is swept from VSS to VDD.			12	µA
I_{OZ}	Total leakage current through the driver/receiver combination, which may include an internal pull-up or pull-down. This value represents the maximum current flowing in or out of the pin while the output driver is disabled, the pull-up or pull-down is inhibited, and the input is swept from VSS to VDD.			12	µA
V_{OL}	Low-level output voltage at 3-mA sink current			0.2 × VDDSHV0_WKUP	V
I2C STANDARD MODE / FAST MODE - VDDSHV0_WKUP = 3.3 V					
V_{IH}	High-level input voltage	0.7 × VDDSHV0_WKUP			V
V_{IL}	Low-level input voltage			0.3 × VDDSHV0_WKUP	V
V_{IHSS}	Input high-level Steady State(1)	0.70 × VDDSHV0_WKUP			V
V_{ILSS}	Input low-level Steady State(2)			0.21 × VDDSHV0_WKUP	V
V_{HYS}	Hysteresis	0.05 × VDDSHV0_WKUP			V
I_{IN}	Input leakage current. This value represents the maximum current flowing in or out of the pin while the output driver is disabled and the input is swept from VSS to VDD.			80	µA

Copyright © 2023 Texas Instruments Incorporated

over recommended operating conditions (unless otherwise noted)

PARAMETER		MIN	TYP	MAX	UNIT
I_{OZ}	Total leakage current through the driver/receiver combination, which may include an internal pull-up or pull-down. This value represents the maximum current flowing in or out of the pin while the output driver is disabled, the pull-up or pull-down is inhibited, and the input is swept from VSS to VDD.			80	µA
V_{OL}	Low-level output voltage at 3-mA sink current			0.4	V

(1) Voltage Input High Steady State (V_{IHSS}) should be maintained when the signal is not transitioning.
(2) Voltage Input Low Steady State (V_{ILSS}) should be maintained when the signal is not transitioning.

6.6.2 Analog OSC Buffers DC Electrical Characteristics

over recommended operating conditions (unless otherwise noted)

PARAMETER[1]		MIN	TYP	MAX	UNIT
BALL NAMES: OSC1_XI / WKUP_OSC0_XI					
BALL NUMBERS: C22 / AD5					
HIGH FREQUENCY OSCILLATOR					
V_{IH}	High-level input voltage	0.65 × VDDS[1]			V
V_{IL}	Low-level input voltage			0.35 × VDDS[1]	V
BALL NAMES: WKUP_LFOSC0_XI					
BALL NUMBERS: AE4					
LOW FREQUENCY OSCILLATOR					
V_{IH}	High-level input voltage	0.65 × VDDA_WKUP			V
V_{IL}	Low-level input voltage			0.35 × VDDA_WKUP	V

(1) VDDS stands for corresponding power supply. For WKUP_OSC0_XI, the corresponding power supply is VDDA_WKUP. For OSC1_XI, the corresponding power supply is VDDS_OSC1.

Copyright © 2023 Texas Instruments Incorporated

6.6.3 Analog ADC DC Electrical Characteristics

over recommended operating conditions (unless otherwise noted)

PARAMETER		TEST CONDITIONS	MIN	TYP	MAX	UNIT
BALL NAMES in Mode 0: MCU_ADC0_AIN[7:0] / MCU_ADC0_REFP/N / MCU_ADC1_AIN[7:0] / MCU_ADC1_REFP/N						
BALL NUMBERS: F4 / F5 / G3 / G4 / G5 / G6 / H2 / H3 / H4 / H5 / J1 / J2 / J3 / J4 / J5 / J6 / K2 / K3 / K4 / K5						
Analog Input						
$V_{MCU_ADC0/1_REFP}$	MCU_ADC0/1_REFP		(0.5 × VDDA_ADC_MCU) + 0.25		VDDA_ADC_MCU	V
$V_{MCU_ADC0/1_REFN}$	MCU_ADC0/1_REFN		0		(0.5 × VDDA_ADC_MCU) - 0.25	V
$V_{MCU_ADC0/1_REFP + MCU_ADC0/1_REFN}$	MCU_ADC0/1_REFP +MCU_ADC0/1_REFN			VDDA_ADC_MCU		V
$V_{MCU_ADC0/1_AIN[7:0]}$	Full-scale Input Range		MCU_ADC0/1_REFN		MCU_ADC0/1_REFP	V
DNL	Differential Non-Linearity	MCU_ADC0/1_REFP = VDDA_MCU_ADC0/1, MCU_ADC0/1_REFN = VSS	-1	0.5	4	LSB
INL	Integral Non-Linearity	MCU_ADC0/1_REFP = VDDA_MCU_ADC0/1, MCU_ADC0/1_REFN = VSS		±1	±4	LSB
$LSB_{GAIN-ERROR}$	Gain Error	MCU_ADC0/1_REFP = VDDA_MCU_ADC0/1, MCU_ADC0/1_REFN = VSS		±2		LSB
$LSB_{OFFSET-ERROR}$	Offset Error	MCU_ADC0/1_REFP = VDDA_MCU_ADC0/1, MCU_ADC0/1_REFN = VSS		±2		LSB
C_{IN}	Input Sampling Capacitance			5.5		pF
SNR	Signal-to-Noise Ratio	Input Signal: 200 kHz sine wave at -0.5 dB Full Scale, MCU_ADC0/1_REFP = VDDA_MCU_ADC0/1, MCU_ADC0/1_REFN = VSS		70		dB
THD	Total Harmonic Distortion	Input Signal: 200 kHz sine wave at -0.5 dB Full Scale, MCU_ADC0/1_REFP = VDDA_MCU_ADC0/1, MCU_ADC0/1_REFN = VSS		75		dB

Copyright © 2023 Texas Instruments Incorporated

over recommended operating conditions (unless otherwise noted)

PARAMETER		TEST CONDITIONS	MIN	TYP	MAX	UNIT
SFDR	Spurious Free Dynamic Range	Input Signal: 200 kHz sine wave at -0.5 dB Full Scale, MCU_ADC0/1_REFP = VDDA_MCU_ADC0/1, MCU_ADC0/1_REFN = VSS		80		dB
$SNR_{(PLUS)}$	Signal-to-Noise Plus Distortion	Input Signal: 200 kHz sine wave at -0.5 dB Full Scale, MCU_ADC0/1_REFP = VDDA_MCU_ADC0/1, MCU_ADC0/1_REFN = VSS		69		dB
$R_{static(MCU_ADC0/1_REFP, MCU_ADC0/1_REFN)}$	Static Input Impedance of MCU_ADC0/1_REFP relative to MCU_ADC0/1_REFN			2.2		kΩ
$R_{dynamic(MCU_ADC0/1_REFP, MCU_ADC0/1_REFN)}$	Dynamic Input Impedance of MCU_ADC0/1_REFP relative to MCU_ADC0/1_REFN			$[1/((65.97 \times 10^{-12}) \times f_{SMPL_CLK})]$ (1)		Ω
$R_{MCU_ADC0/1_AIN[0:7]}$	Input Impedance of MCU_ADC0/1_AIN[7:0]	f = input frequency		$[1/((65.97 \times 10^{-12}) \times f_{SMPL_CLK})]$		Ω
I_{IN}	ADC0 Input Leakage	MCU_ADC0_AIN[7:0] = VSS			-23	µA
		MCU_ADC0_AIN[7:0] = VDDA_MCU_ADC0			27	µA
I_{IN}	ADC1 Input Leakage	MCU_ADC1_AIN[7:0] = VSS			-126	µA
		MCU_ADC1_AIN[7:0] = VDDA_MCU_ADC1			572	µA
Sampling Dynamics						
F_{SMPL_CLK}	SMPL_CLK Frequency			60		MHz
t_C	Conversion Time			13		ADC0/1 SMPL_CLK Cycles
t_{ACQ}	Acquisition time		2		257	ADC0/1 SMPL_CLK Cycles
T_R	Sampling Rate	ADC0/1 SMPL_CLK = 60 MHz			4	MSPS
CCISO	Channel to Channel Isolation			100		dB

(1) The MCU_ADC0/1_REFP and MCU_ADC0/1_REFN source impedance should be ≤ to 1/10 × ($R_{dynamic(MCU_ADC0/1_REFP, MCU_ADC0/1_REFN)}$). For example, for a 60 MHz clock, this source should be ≤ to 25 Ω on each reference input.

Copyright © 2023 Texas Instruments Incorporated

6.6.4 DPHY CSI2 Buffers DC Electrical Characteristics

over operating free-air temperature range (unless otherwise noted)

PARAMETER		MIN	NOM	MAX	UNIT
BALL NAMES in Mode 0: CSI0_RXN0 / CSI0_RXN3 / CSI0_RXN4 / CSI0_RXP0 / CSI0_RXP3 / CSI0_RXP4 / CSI0_RXN1 / CSI0_RXN2 / CSI0_RXP1 / CSI0_RXP2					
BALL NUMBERS: F24 / F26 / F28 / G24 / G25 / G26 / G27 / G28 / H25 / H27					
Low-Power Receiver (LP-RX)					
V_{IH}	High-level input voltage	880			mV
V_{IL}	Low-level input voltage			550	mV
V_{HYS}	Hysteresis	25			mV
Ultra-Low Power Receiver (ULP-RX)					
V_{ITH}	High-level input voltage	880			mV
$V_{ITL-ULPM}$	Low-level input voltage			300	mV
V_{HYS}	Hysteresis	25			mV
High Speed Receiver (HS-RX)					
V_{IDTH}	Differential input high threshold	70			mV
V_{IDTL}	Differential input low threshold			-70	mV
V_{IDMAX}	Maximum differential input voltage			270	mV
V_{ILHS}	Single-ended input low voltage	-40			mV
V_{IHHS}	Single-ended input high voltage			460	mV
V_{CMRXDC}	Common-mode voltage	70		330	mV

6.6.5 OLDI LVDS Buffers DC Electrical Characteristics

over recommended operating conditions (unless otherwise noted)

PARAMETER		TEST CONDITIONS	MIN	TYP	MAX	UNIT
1.8-V MODE						
BALL NAMES in Mode 0: OLDI0_A0P/N / OLDI0_A1P/N / OLDI0_A2P/N / OLDI0_A3P/N / OLDI0_CLKP/N						
BALL NUMBERS: J24 / J26 / J28 / K24 / K25 / K26 / K27 / K28 / L25 / L27						
OLDI LVDS TRANSMITTER						
V_{OH}	High Level Output Voltage	Differential Load = 100Ω		1.3	1.6	V
V_{OL}	Low Level Output Voltage		0.9	1.01		V
V_{CM}	Common Mode Voltage (OLDI)		1.125	1.25	1.375	V
	Common Mode Voltage (sub-LVDS)			0.9		V
ΔV_{CM}	Difference in Common Mode Output Voltage, between high/low steady-states				35	mV
V_{OD}	Differential Output Voltage		250	380	450	mV
	Reduced Differential Output Voltage		100	200	300	mV
ΔV_{OD}	Difference in Differential Output Voltage, between high/low steady states				50	mV
I_{OS}	Output Short Circuit Current	PAD/PADN = 0, Differential Load = 100Ω			-5	mA
I_{OZ}	Output Tri-State Current	PAD/PADN = 0/VDDS(1)	-10	4	40	µA

(1) VDDS stands for corresponding power supply. For more information on the power supply name and the corresponding ball, see Table 5-1, POWER [9] column.

Copyright © 2023 Texas Instruments Incorporated

6.6.5.1 LVCMOS Buffers DC Electrical Characteristics

over recommended operating conditions (unless otherwise noted)(1)

PARAMETER			SPECIFIC BALL	MIN	TYP	MAX	UNIT
BALL NAMES: ALL LVCMOS IOs as defined in Table 5-1, *Pin Attributes* except those listed in Section 6.6.5.1, *LVCMOS Buffers DC Electrical Characteristics*							
BALL NUMBERS: ALL LVCMOS IOs as defined in Table 5-1, *Pin Attributes* except those listed in Section 6.6.5.1, *LVCMOS Buffers DC Electrical Characteristics*							
1.8-V MODE							
V_{IH}	Input high-level threshold		TCK (AA4)	0.60 × VDDS(1)			V
			All other IOs	0.65 × VDDS(1)			
V_{IL}	Input low-level threshold		TCK (AA4)			0.30 × VDDS(1)	V
			All other IOs			0.35 × VDDS(1)	
V_{IHSS}	Input high-level Steady State			0.75 × VDDS(1)			V
V_{ILSS}	Input low-level Steady State					0.35 × VDDS(1)	V
V_{HYS}	Input hysteresis voltage		TCK (AA4)	400			mV
			PORz (E19), MCU_PORz (W5), MCU_BYP_POR (V5)	50			
			All other IOs	100			
V_{OH}	Output high-level threshold	I_{OH} = 100µA		VDDS(1) - 0.1			V
		I_{OH} = 2mA		VDDS(1) - 0.2			
		I_{OH} = 4mA		VDDS(1) - 0.3			
		I_{OH} = 6mA		VDDS(1) - 0.4			
V_{OL}	Output low-level threshold	I_{OL} = 100µA				0.1	V
		I_{OL} = 2mA				0.2	
		I_{OL} = 4mA				0.3	
		I_{OL} = 6mA				0.4	
I_{IN}	Input leakage current, pull-up or pull-down inhibited					11.5	µA
	Input leakage current, pull-down enabled, V_I = VDDS(1)			65	96	153	
	Input leakage current, pull-up enabled, V_I = VSS			64	97	154	
I_{OZ}	Total leakage current through the driver/receiver combination, which may include an internal pull-up or pull-down. This value represents the maximum current flowing in or out of the pin while the output driver is disabled, the pull-up or pull-down is inhibited, and the input is swept from VSS to VDD.					11.5	µA
3.3-V MODE							
V_{IH}	Input high-level threshold		TCK (AA4)	2			V
			MMC0_*, MMC1_*	0.625 * VDDSHVn			
			All other IOs	2			
V_{IL}	Input low-level threshold		TCK (AA4)			0.7	V
			MMC0_*, MMC1_*			0.25 * VDDSHVn	
			All other IOs			0.8	
V_{IHSS}	Input high-level Steady State			2.00			V

Copyright © 2023 Texas Instruments Incorporated

over recommended operating conditions (unless otherwise noted)(1)

PARAMETER			SPECIFIC BALL	MIN	TYP	MAX	UNIT
V_{ILSS}	Input low-level Steady State					0.75	V
V_{HYS}	Input hysteresis voltage		TCK (AA4)	400			mV
			PORz (E19), MCU_PORz (W5), MCU_BYP_POR (V5)	50			
			All other IOs	100			
V_{OH}	Output high-level threshold	I_{OH} = 100µA		VDDS(1) - 0.1			V
		I_{OH} = 2mA		VDDS(1) - 0.2			
		I_{OH} = 4mA		VDDS(1) - 0.3			
		I_{OH} = 6mA		VDDS(1) - 0.45			
V_{OL}	Output low-level threshold	I_{OL} = 100µA				0.1	V
		I_{OL} = 2mA				0.2	
		I_{OL} = 4mA				0.3	
		I_{OL} = 6mA				0.45	
I_{IN}	Input leakage current, pull-up or pull-down inhibited					64	µA
	Input leakage current, pull-down enabled, V_I = VDDS(1)			67	100.7	198	
	Input leakage current, pull-up enabled, V_I = VSS			63	100.3	160	
I_{OZ}	Total leakage current through the driver/receiver combination, which may include an internal pull-up or pull-down. This value represents the maximum current flowing in or out of the pin while the output driver is disabled, the pull-up or pull-down is inhibited, and the input is swept from VSS to VDD.					64	µA

(1) VDDS stands for corresponding power supply. For more information on the power supply name and the corresponding ball, see Table 5-1, *Pin Attributes*, POWER [9] column.

6.6.6 USBHS Buffers DC Electrical Characteristics

Note

USB0 and USB1 Electrical Characteristics are compliant with Universal Serial Bus Revision 2.0 Specification dated April 27, 2000 including ECNs and Errata as applicable.

6.6.7 SERDES Buffers DC Electrical Characteristics

Note

The PCIe interfaces are compliant with the electrical parameters specified in PCI Express® Base Specification Revision 3.1.

Note

USB0 instance is compliant with the USB3.1 SuperSpeed Transmitter and Receiver Normative Electrical Parameters as defined in the Universal Serial Bus 3.1 Specification, Revision 1.0 , July 26, 2013.

Copyright © 2023 Texas Instruments Incorporated

6.7 VPP Specifications for One-Time Programmable (OTP) eFuses

This section specifies the operating conditions required for programming the OTP eFuses and is applicable only for High-Security Devices.

6.7.1 Recommended Operating Conditions for OTP eFuse Programming

over operating free-air temperature range (unless otherwise noted)

PARAMETER[2]	DESCRIPTION	MIN	NOM	MAX	UNIT
VDD_MCU	Supply voltage range for the core domain during OTP operation; OPP NOM (BOOT)	See Section 6.4			V
VPP_CORE	Supply voltage range for the eFuse ROM domain during normal operation		NC		V
	Supply voltage range for the eFuse ROM domain during OTP programming[1]		NC		V
VPP_MCU	Supply voltage range for the eFuse ROM domain during normal operation		NC		V
	Supply voltage range for the eFuse ROM domain during OTP programming[1]	1.71	1.8	1.89	V
$I_{(VPP_MCU)}$				100	mA
Tj	Temperature (junction)	0	25	85	°C

(1) Supply voltage range includes DC errors and peak-to-peak noise. TI power management solutions TLV70718 from the TLV707x family meet the supply voltage range needed for VPP_MCU.
(2) NC stands for No Connect.

6.7.2 Hardware Requirements

The following hardware requirements must be met when programming keys in the OTP eFuses:

- The VPP_MCU power supply must be disabled when not programming OTP registers.
- The VPP_MCU power supply must be ramped up after the proper device power-up sequence (for more details, see Section 6.9.2, *Power Supply Sequencing*).

6.7.3 Programming Sequence

Programming sequence for OTP eFuses:

- Power on the board per the power-up sequencing. No voltage should be applied on the VPP_MCU terminal during power up and normal operation.
- Load the OTP write software required to program the eFuse (contact your local TI representative for the OTP software package).
- Apply the voltage on the VPP_MCU terminal according to the specification in Section 6.7.1.
- Run the software that programs the OTP registers.
- After validating the content of the OTP registers, remove the voltage from the VPP_MCU terminal.

6.7.4 Impact to Your Hardware Warranty

You accept that e-Fusing the TI Devices with security keys permanently alters them. You acknowledge that the e-Fuse can fail, for example, due to incorrect or aborted program sequence or if you omit a sequence step. Further the TI Device may fail to secure boot if the error code correction check fails for the Production Keys or if the image is not signed and optionally encrypted with the current active Production Keys. These types of situations will render the TI Device inoperable and TI will be unable to confirm whether the TI Devices conformed to their specifications prior to the attempted e-Fuse.

CONSEQUENTLY, TI WILL HAVE NO LIABILITY (WARRANTY OR OTHERWISE) FOR ANY TI DEVICES THAT HAVE BEEN e-FUSED WITH SECURITY KEYS.

Copyright © 2023 Texas Instruments Incorporated

6.8 Thermal Resistance Characteristics

This section provides the thermal resistance characteristics used on this device.

For reliability and operability concerns, the maximum junction temperature of the Device has to be at or below the T_J value identified in Section 6.4, *Recommended Operating Conditions*.

6.8.1 Thermal Resistance Characteristics

It is recommended to perform thermal simulations at the system level with the worst case device power consumption

NO.	NAME	DESCRIPTION	ACD °C/W(1) (3)	AIR FLOW (m/s)(2)
T1	$R\Theta_{JC}$	Junction-to-case	0.2	N/A
T2	$R\Theta_{JB}$	Junction-to-board	3.1	N/A
T3	$R\Theta_{JA}$	Junction-to-free air	12.8	0
T4		Junction-to-moving air	7.4	1
T5			6.5	2
T6			6	3
T7	Ψ_{JT}	Junction-to-package top	0.1	0
T8			0.1	1
T9			0.1	2
T10			0.1	3
T11	Ψ_{JB}	Junction-to-board	2.9	0
T12			2.4	1
T13			2.3	2
T14			2.3	3

(1) These values are based on a JEDEC defined 2S2P system (with the exception of the Theta JC [RΘJC] value, which is based on a JEDEC defined 1S0P system) and will change based on environment as well as application. For more information, see these EIA/JEDEC standards:

- JESD51-2, *Integrated Circuits Thermal Test Method Environment Conditions - Natural Convection (Still Air)*
- JESD51-3, *Low Effective Thermal Conductivity Test Board for Leaded Surface Mount Packages*
- JESD51-6, *Integrated Circuit Thermal Test Method Environmental Conditions - Forced Convection (Moving Air)*
- JESD51-7, *High Effective Thermal Conductivity Test Board for Leaded Surface Mount Packages*
- JESD51-9, *Test Boards for Area Array Surface Mount Packages*

(2) m/s = meters per second.
(3) °C/W = degrees Celsius per watt.

Copyright © 2023 Texas Instruments Incorporated

6.9 Timing and Switching Characteristics

Note

The Timing Requirements and Switching Characteristics values may change following the silicon characterization result.

Note

The default SLEWRATE settings in each pad configuration register must be used to ensure timings, unless specific instructions are given otherwise.

6.9.1 Timing Parameters and Information

The timing parameter symbols used in Section 6.9 are created in accordance with JEDEC Standard 100. To shorten the symbols, some pin names and other related terminologies have been abbreviated in Table 6-5:

Table 6-5. Timing Parameters Subscripts

SYMBOL	PARAMETER
c	Cycle time (period)
d	Delay time
dis	Disable time
en	Enable time
h	Hold time
su	Setup time
START	Start bit
t	Transition time
v	Valid time
w	Pulse duration (width)
X	Unknown, changing, or don't care level
F	Fall time
H	High
L	Low
R	Rise time
V	Valid
IV	Invalid
AE	Active Edge
FE	First Edge
LE	Last Edge
Z	High impedance

Copyright © 2023 Texas Instruments Incorporated

6.9.2 Power Supply Sequencing

This section describes the power-up sequence required to ensure proper device operation. The power supply names described in this section comprise a superset of a family of compatible devices. Some members of this family will not include a subset of these power supplies and their associated device modules.

Note

All timing requirements and switching characteristics in Section 6.9.3 should be strictly followed unless otherwise specified.

6.9.2.1 Power Supply Slew Rate Requirement

To maintain the safe operating range of the internal ESD protection devices, TI recommends limiting the maximum slew rate of supplies to be less than 100 mV/µs. For instance, as shown in Figure 6-2, TI recommends having the supply ramp slew for a 1.8-V supply of more than 18 µs.

Figure 6-2 describes the Power Supply Slew Rate Requirement of the device.

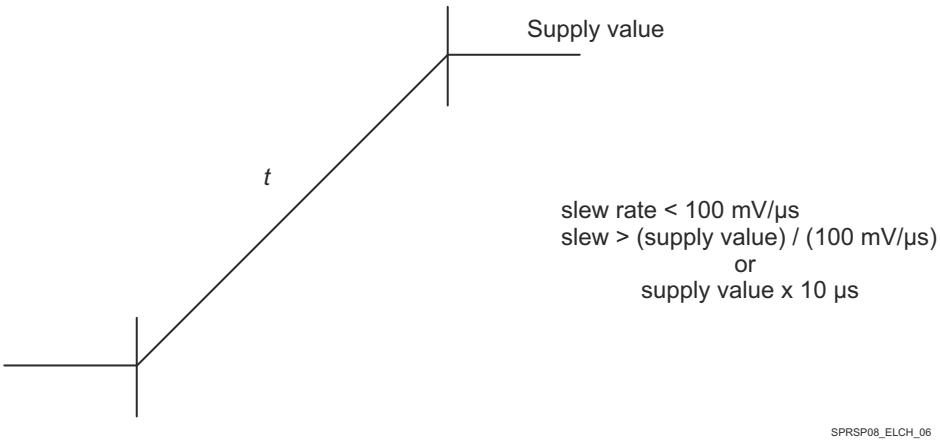

Figure 6-2. Power Supply Slew and Slew Rate

6.9.2.2 VDDA_1P8_SERDES0 Supply Slew Rate Requirement

To maintain the safe operating range of the internal ESD protection devices, TI recommends limiting the maximum slew rate of VDDA_1P8_SERDES0 supplies to be less than 40 mV/µs. For instance, as shown in Figure 6-3, TI recommends having the supply ramp slew for a 1.8-V supply of more than 45 µs.

Figure 6-3 describes the VDDA_1P8_SERDES0 Supply Slew Rate Requirement of the device.

Copyright © 2023 Texas Instruments Incorporated

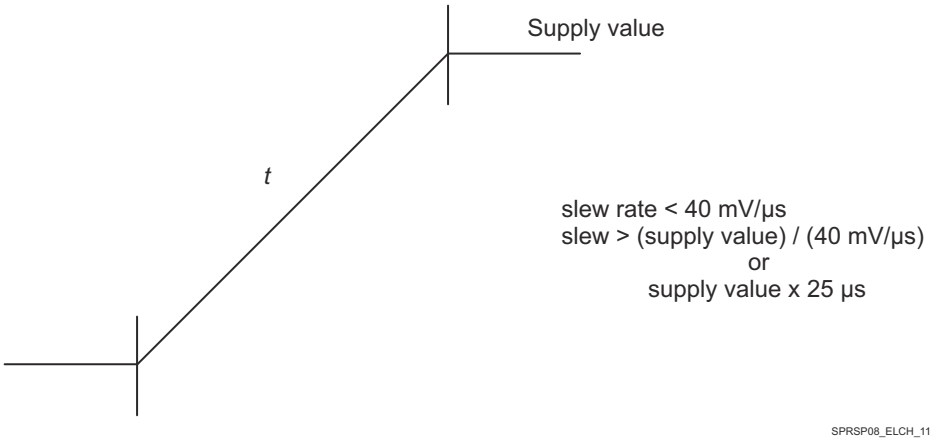

Figure 6-3. VDDA_1P8_SERDES0 Supply Slew and Slew Rate

6.9.2.3 Power-Up Sequencing

Figure 6-4 describes the Power-Up Sequencing using On Chip Power-on-reset (POR) of the device.

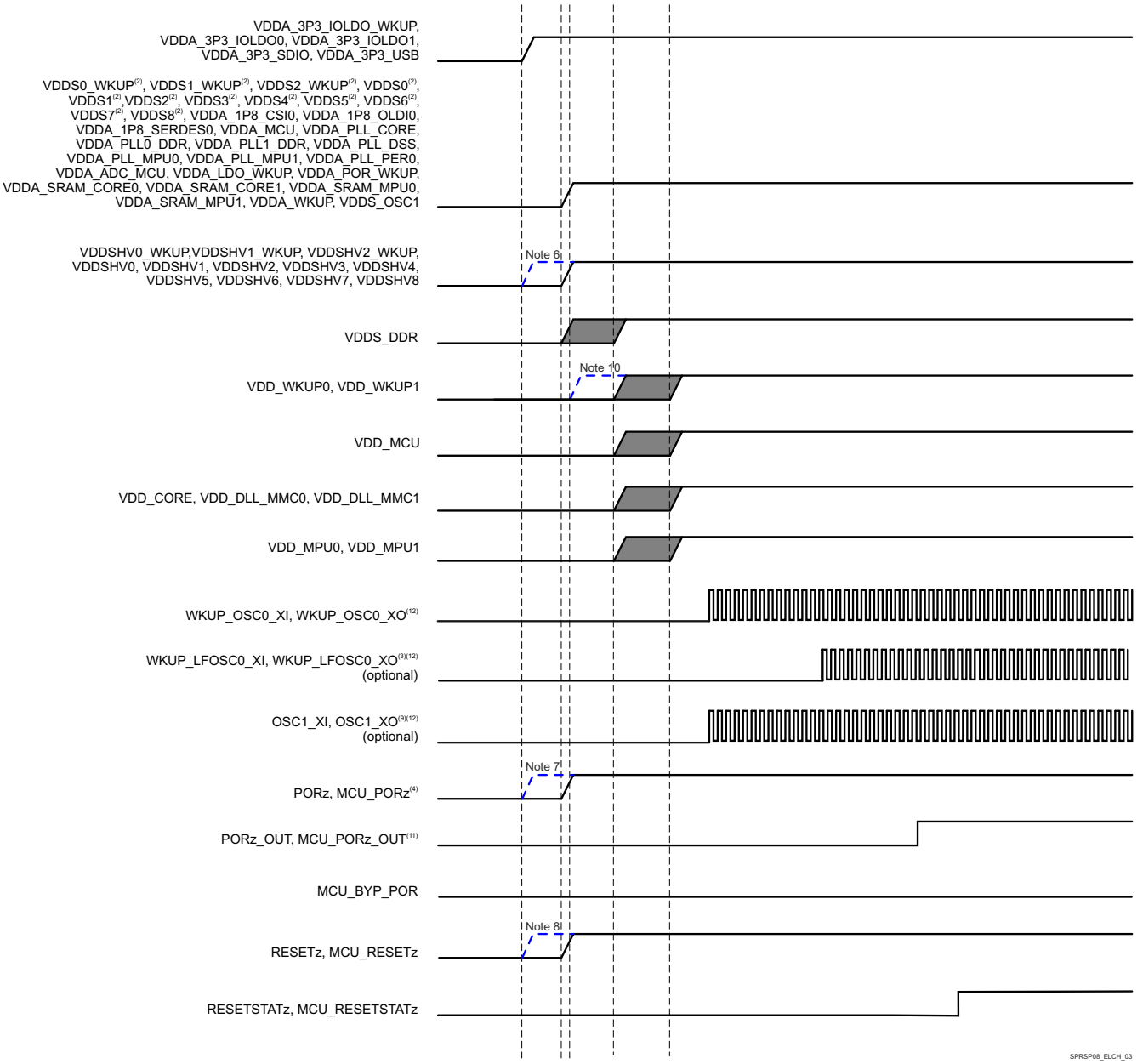

Figure 6-4. Power-Up Sequencing using On Chip Power-on-reset (POR)

Figure 6-5 describes the Power-Up Sequencing using External Power-on-reset (POR), bypassing on-chip POR circuit of the device.

Copyright © 2023 Texas Instruments Incorporated

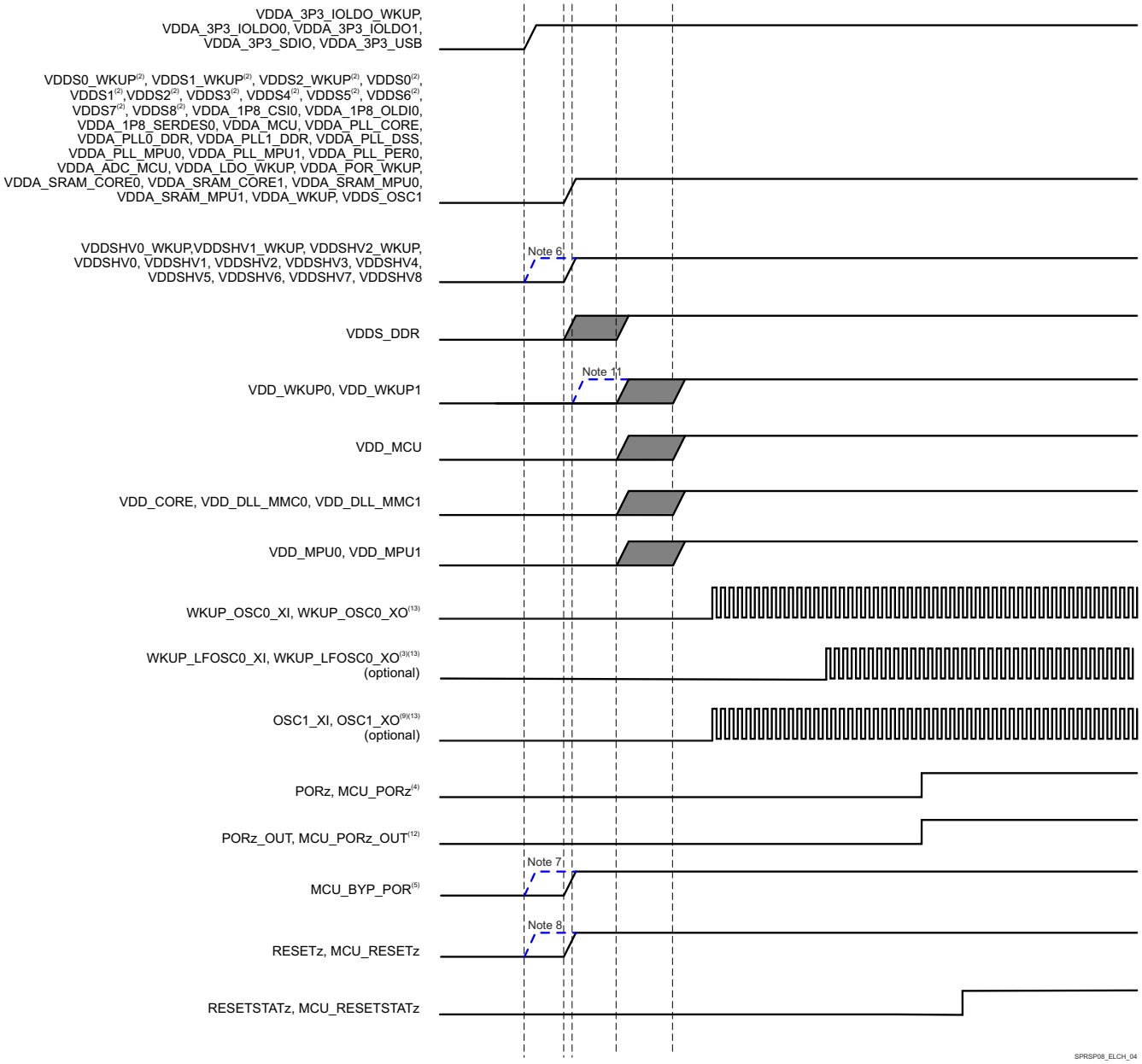

Figure 6-5. Power-Up Sequencing using External Power-on-reset (POR), bypassing on-chip POR circuit

6.9.2.4 Power-Down Sequencing

A typical power down sequence is to have the Power-on-Reset asserted, clock shut down, and ramp down all the power supplies sequentially in the exact reverse order of the power-up sequencing. In other words, the power supply that has been ramped up first should be the last one that is ramped down.

For AM654x/AM652x, there are no specific power-down sequencing requirements, except for asserting Power-on-Reset before ramping down the rails while bypassing internal POR.

Copyright © 2023 Texas Instruments Incorporated

6.9.3 System Timing

For more details about features and additional description information on the subsystem multiplexing signals, see the corresponding sections within Section 5.3, *Signal Descriptions* and Section 7, *Detailed Description*.

Table 6-6. System Timing Conditions

PARAMETER		MIN	MAX	UNIT
INPUT CONDITIONS				
SR_I	Input slew rate	0.5	5	V/ns
OUTPUT CONDITIONS				
C_L	Output load capacitance	3	30	pF

6.9.3.1 Reset Electrical Data/Timing

Table 6-7, Table 6-8, Figure 6-6, Figure 6-7, and Figure 6-8 present the reset timing requirements and switching characteristics.

Table 6-7. Reset Timing Requirements

NO.	PARAMETER	DESCRIPTION	MIN	MAX	UNIT
PORz Pin					
RST1	$t_{w(PORzL)}$	Pulse Width minimum, PORz low	2000		ns
RST2	$t_{h(SUPPLIES\ VALID\ -\ PORz)}$	Hold time, PORz active (low) after all supplies valid	2000000		ns
RESETz Pin					
RST5	$t_{w(RESETzL)}$	Pulse Width minimum, RESETz low	400		ns
MCU_PORz Pin					
RST13	$t_{w(MCU_PORzL)}$	Pulse Width minimum, MCU_PORz	2000		ns
RST8	$t_{h(SUPPLIES\ VALID\ -\ MCU_PORz)}$	Hold time, MCU_PORz active (low) after all supplies valid	2000000		ns
MCU_RESETz Pin					
RST9	$t_{w(MCU_RESETzL)}$	Pulse Width minimum, MCU_RESETz	400		ns
MCU_BYP_POR Pin					
RST12	$t_{su(MCU_BYP_POR-MCU_PORz)}$	Setup time, MCU_BYP_POR active (high) before all supplies are valid	1000000		ns

Table 6-8. Reset Switching Characteristics

NO.	PARAMETER	DESCRIPTION	MIN	MAX	UNIT
PORz Pin					
RST3	$t_{d(PORz-PORz_OUT\ low)}$	Delay time, PORz active (low) to PORz_OUT active (low)	0		ns
RST4	$t_{d(PORz-PORz_OUT\ high)}$	Delay time, PORz inactive (high) to PORz_OUT inactive (high)	0		ns
RESETz Pin					
RST6	$t_{d(RESETz-RESETSTATz\ low)}$	Delay time, RESETz active (low) to RESETSTATz active (low)	4106		ns
RST7	$t_{d(RESETz-RESETSTATz\ high)}$	Delay time, RESETz inactive (high) to RESETSTATz inactive (high)	380000		ns
MCU_RESETSTATz Pin					
RST10	$t_{d(MCU_RESETz-MCU_RESETSTATz\ low)}$	Delay time, MCU_RESETz active (low) to MCU_RESETSTATz active (low)	4106		ns
RST11	$t_{d(MCU_RESETz-MCU_RESETSTATz\ high)}$	Delay time, MCU_RESETz inactive (high) to MCU_RESETSTATz inactive (high)	289000		ns
MCU_PORz Pin					
RST14	$t_{d(MCU_PORz-MCU_PORz_OUT\ low)}$	Delay time, MCU_PORz active (low) to MCU_PORz_OUT active (low)	0		ns
RST15	$t_{d(MCU_PORz-MCU_PORz_OUT\ high)}$	Delay time, MCU_PORz inactive (high) to MCU_PORz_OUT inactive (high)	0		ns

Copyright © 2023 Texas Instruments Incorporated

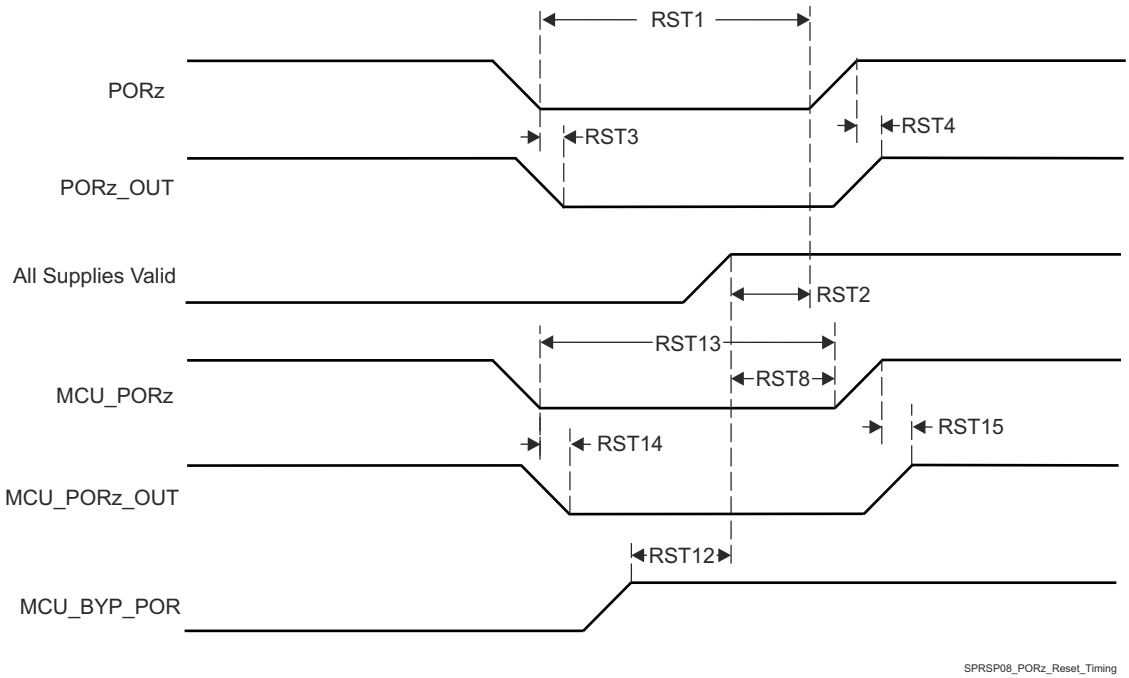

Figure 6-6. PORz Reset Timing

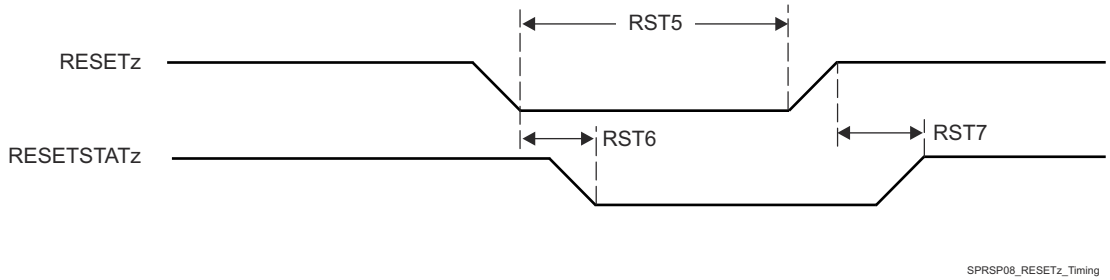

Figure 6-7. RESETz and RESETSTATz Timing

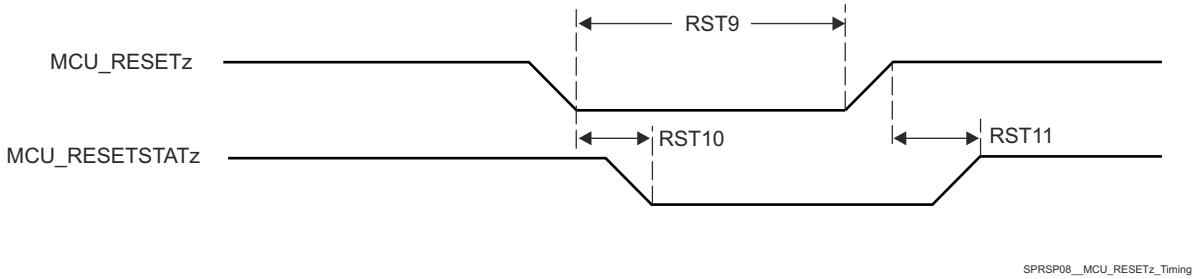

Figure 6-8. MCU_RESETz and MCU_RESETSTATz Timing

Table 6-9 and Figure 6-9 present the boot configuration timing requirements.

Table 6-9. Boot Configuration Timing Requirements

NO.	PARAMETER		MIN	MAX	UNIT
BC1	$t_{su(BOOTMODE-PORz)}$	Setup time, All Bootmode pins active to PORz inactive (high)	2000		ns
BC2	$t_{h(PORz - BOOTMODE)}$	Hold time, All Bootmode pins active after PORz inactive (high)	0		ns
BC3	$t_{su(MCU_BOOTMODE-MCU_PORz)}$	Setup time, All Bootmode pins active to MCU_PORz inactive (high)	2000		ns

Copyright © 2023 Texas Instruments Incorporated

Table 6-9. Boot Configuration Timing Requirements (continued)

NO.	PARAMETER		MIN	MAX	UNIT
BC4	$t_{h(MCU_PORz - MCU_BOOTMODE)}$	Hold time, All Bootmode pins active after MCU_PORz inactive (high)	0		ns

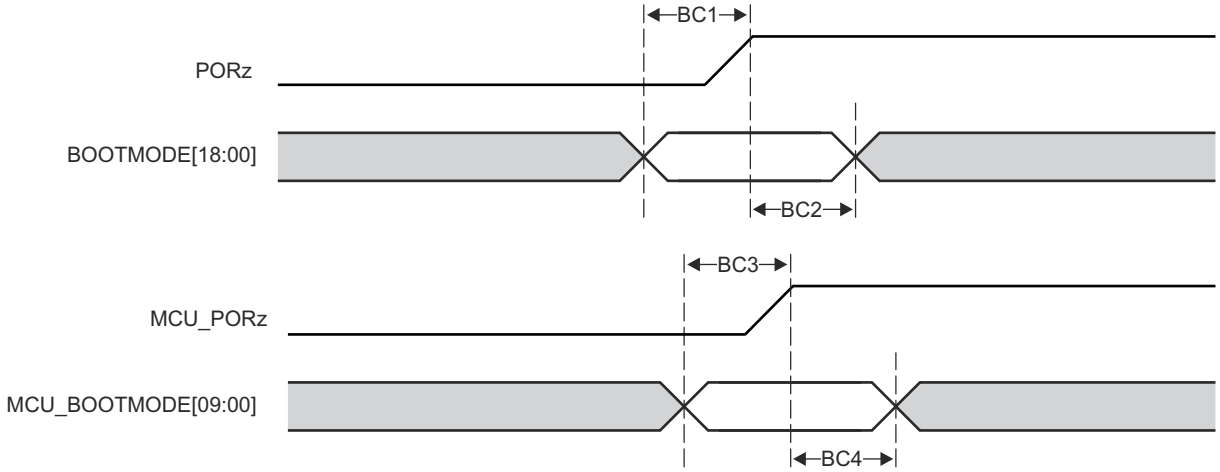

Figure 6-9. Boot Configuration Timing

Copyright © 2023 Texas Instruments Incorporated

6.9.3.2 Safety Signal Timing

Tables and figures provided in this section define switching characteristics for MCU_SAFETY_ERRORn and SOC_SAFETY_ERRORn.

Table 6-10. MCU_SAFETY_ERRORn Switching Characteristics

see Figure 6-10

NO.	PARAMETER		MIN	MAX	UNIT
SFTY1	$t_{w(MCU_SAFETY_ERRORn)}$	Pulse width, MCU_SAFETY_ERRORn active	P*R(1) (2)		ns
SFTY2	$t_{d\ (ERROR_CONDITION-MCU_SAFETY_ERRORnL)}$	Delay time, ERROR CONDITION to MCU_SAFETY_ERRORn active	50*P(1)		ns

(1) P = ESM functional clock.
(2) R = Error Pin Counter Pre-Load Register count value.

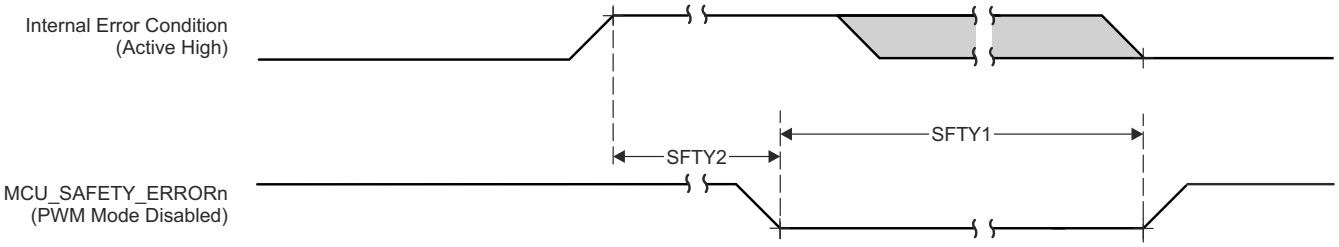

Figure 6-10. MCU_SAFETY_ERRORn Switching Characteristics

Table 6-11. SOC_SAFETY_ERRORn Switching Characteristics

see Figure 6-11

NO.	PARAMETER		MIN	MAX	UNIT
SFTY3	$t_{w(SOC_SAFETY_ERRORn)}$	Pulse width,SOC_SAFETY_ERRORn active	P*R(1) (2)		ns
SFTY4	$t_{d\ (ERROR_CONDITION-SOC_SAFETY_ERRORnL)}$	Delay time, ERROR CONDITION to SOC_SAFETY_ERRORn active	50*P(1)		ns

(1) P = ESM functional clock.
(2) R = Error Pin Counter Pre-Load Register count value.

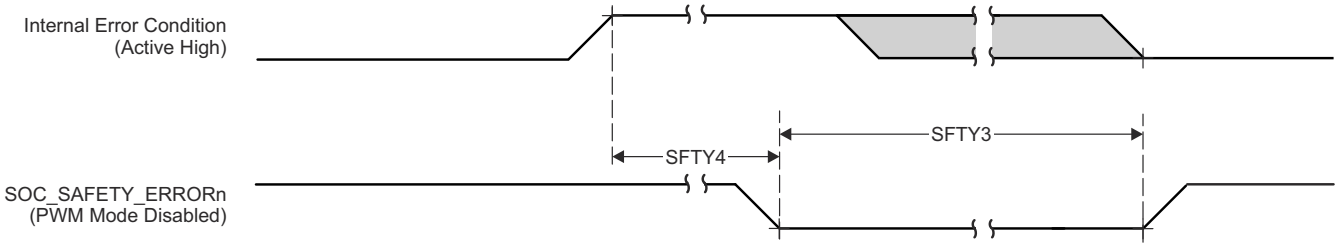

Figure 6-11. SOC_SAFETY_ERRORn Switching Characteristics

Copyright © 2023 Texas Instruments Incorporated

6.9.3.3 Clock Timing

Tables and figures provided in this section define timing requirements and switching characteristics for clock signals.

Table 6-12. Clock Timing Requirements

see Figure 6-12

NO.			MIN	MAX	UNIT
CLK1	$t_{c(EXT_REFCLK1)}$	Cycle time, EXT_REFCLK1	18.52		ns
CLK2	$t_{w(EXT_REFCLK1H)}$	Pulse Duration, EXT_REFCLK1 high	E*0.45(1)	E*0.55(1)	ns
CLK3	$t_{w(EXT_REFCLK1L)}$	Pulse Duration, EXT_REFCLK1 low	E*0.45(1)	E*0.55(1)	ns
CLK13	$t_{c(MCU_EXT_REFCLK0)}$	Cycle time, MCU_EXT_REFCLK0	18.52		ns
CLK14	$t_{w(MCU_EXT_REFCLK0H)}$	Pulse Duration, MCU_EXT_REFCLK0 high	F*0.45(2)	F*0.55(2)	ns
CLK15	$t_{w(MCU_EXT_REFCLK0L)}$	Pulse Duration, MCU_EXT_REFCLK0 low	F*0.45(2)	F*0.55(2)	ns

(1) E = EXT_REFCLK1 cycle time.
(2) F = MCU_EXT_REFCLK0 cycle time.

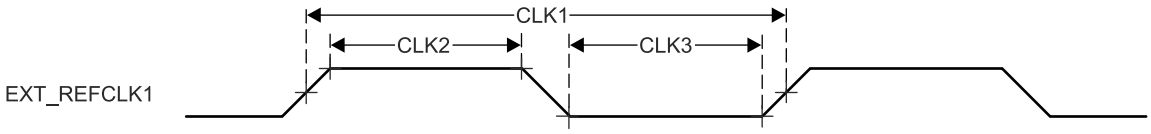

Figure 6-12. Clock Timing Requirements

Table 6-13. Clock Switching Characteristics

see Figure 6-13

NO.	PARAMETER		MIN	MAX	UNIT
CLK4	$t_{c(SYSCLKOUT0)}$	Cycle time minimum,SYSCLKOUT0	6		ns
CLK5	$t_{w(SYSCLKOUT0H)}$	Pulse Duration minimum, SYSCLKOUT0 high	A*0.4(1)	A*0.6(1)	ns
CLK6	$t_{w(SYSCLKOUT0L)}$	Pulse Duration minimum, SYSCLKOUT0 low	A*0.4(1)	A*0.6(1)	ns
CLK7	$t_{c(OBSCLK0)}$	Cycle time minimum, OBSCLK0	5		ns
CLK8	$t_{w(OBSCLK0H)}$	Pulse Duration minimum, OBSCLK0 high	B*0.45(2)	B*0.55(2)	ns
CLK9	$t_{w(OBSCLK0L)}$	Pulse Duration minimum,OBSCLK0 low	B*0.45(2)	B*0.55(2)	ns
CLK10	$t_{c(CLKOUT0)}$	Cycle time minimum, MCU_CLKOUT0	20	40	ns
CLK11	$t_{w(CLKOUT0H)}$	Pulse Duration minimum, MCU_CLKOUT0 high	C*0.4(3)	C*0.6(3)	ns
CLK12	$t_{w(CLKOUT0L)}$	Pulse Duration minimum,MCU_CLKOUT0 low	C*0.4(3)	C*0.6(3)	ns
CLK16	$t_{c(MCU_SYSCLKOUT0)}$	Cycle time minimum,MCU_SYSCLKOUT0	6		ns
CLK17	$t_{w(MCU_SYSCLKOUT0H)}$	Pulse Duration minimum, MCU_SYSCLKOUT0 high	A*0.4(1)	A*0.6(1)	ns
CLK18	$t_{w(MCU_SYSCLKOUT0L)}$	Pulse Duration minimum, MCU_SYSCLKOUT0 low	A*0.4(1)	A*0.6(1)	ns
CLK19	$t_{c(MCU_OBSCLK0)}$	Cycle time minimum, MCU_OBSCLK0	5		ns
CLK20	$t_{w(MCU_OBSCLK0H)}$	Pulse Duration minimum, MCU_OBSCLK0 high	B*0.45(2)	B*0.55(2)	ns
CLK21	$t_{w(MCU_OBSCLK0L)}$	Pulse Duration minimum,MCU_OBSCLK0 low	B*0.45(2)	B*0.55(2)	ns

(1) A = SYSCLKOUT0 cycle time in MAIN domain; A = MCU_SYSCLKOUT0 in MCU domain.
(2) B = OBSCLK0 cycle time in MAIN domain; B = MCU_OBSCLK0 in MCU domain.
(3) C = MCU_CLKOUT0 cycle time.

Copyright © 2023 Texas Instruments Incorporated

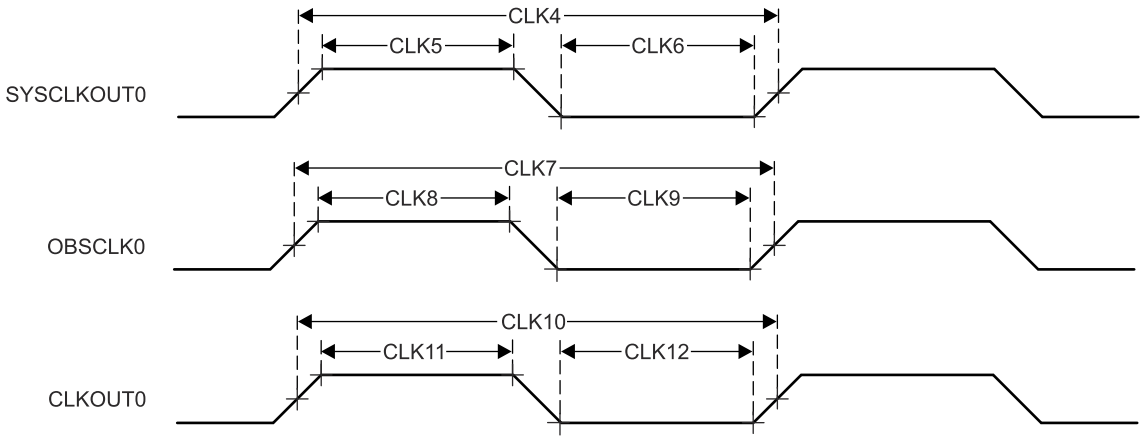

Figure 6-13. Clock Switching Characteristics

6.9.4 Clock Specifications

6.9.4.1 Input Clocks / Oscillators

Various external clock inputs are needed to drive the device. Summary of these input clock signals are:

- OSC1_XO/OSC1_XI — External main crystal interface pins connected to internal oscillator which sources reference clock and provides reference clock to PLLs within MAIN domain. Also, for audio applications, high-frequency oscillator 0 is used to provide audio clock frequencies to MCASPs.
- WKUP_OSC0_XO/WKUP_OSC0_XI — External main crystal interface pins connected to internal oscillator which sources reference clock and provides reference clock to PLLs within MCU domain and MAIN domain.
- WKUP_LFOSC_XO/WKUP_LFOSC_XI — External main crystal interface pins connected to internal oscillator which sources reference clock provides a clock for low power operation in deeper sleep modes.
- MCU_EXT_REFCLK0 — Optional external system clock input (MCU domain).
- EXT_REFCLK1— Optional external System clock input (MAIN domain). Optionally PLL2 (PER1) and MCASP can be sourced by EXT_REFCLK1 (sourced externally).
- SERDES0_REFCLK P/N and SERDES1_REFCLK P/N — SerDes reference clock for PCIe or Optional USB3.0 PHY.
- MCU_CPTS0_RFT_CLK — CPTS reference clock inputs for MCU_CPTS0_RFT_CLK.
- CPTS_RFT0_CLK — CPTS reference clock inputs for CPTS0_RFT_CLK.
- VOUT1_EXTPCLKIN — Optional for the DPI1 Port of DSS.
- REFCLK0 P/N and REFCLK1 P/N — There are 2 differential clock output pins to support 2 PCIe devices.

Figure 6-14 shows the external input clock sources to peripherals.

Copyright © 2023 Texas Instruments Incorporated

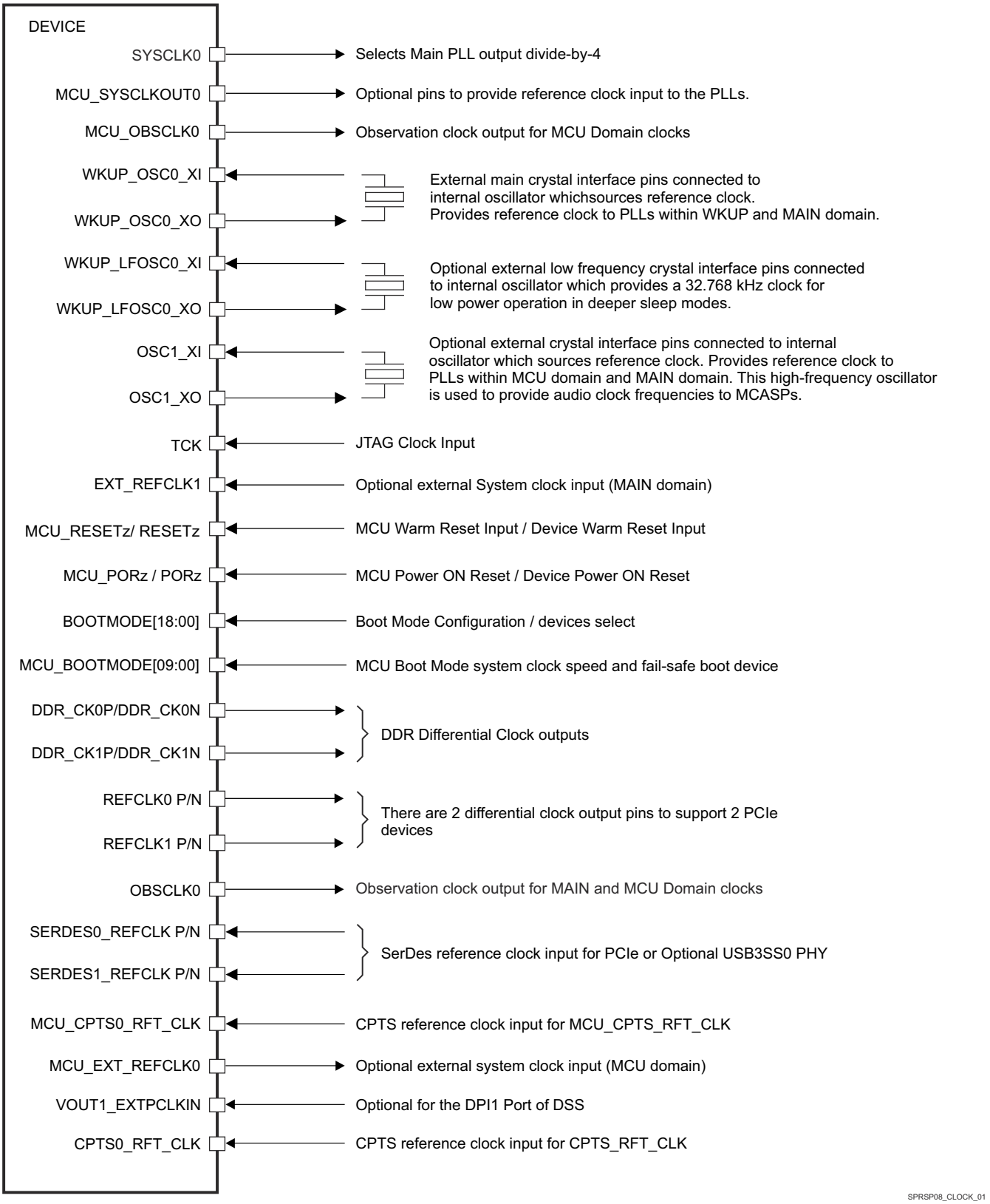

Figure 6-14. Input Clocks Interface

For more information about Input clock interfaces, see the *Clocking* section in the device TRM.

Copyright © 2023 Texas Instruments Incorporated

6.9.4.1.1 WKUP_OSC0 Internal Oscillator Clock Source

Figure 6-15 shows the recommended crystal circuit. It is recommended that preproduction printed-circuit board (PCB) designs include the two optional resistors R_{bias} and R_d in case they are required for proper oscillator operation when combined with production crystal circuit components. In most cases, R_{bias} is not required and R_d is a 0-Ω resistor. These resistors may be removed from production PCB designs after evaluating oscillator performance with production crystal circuit components installed on preproduction PCBs.

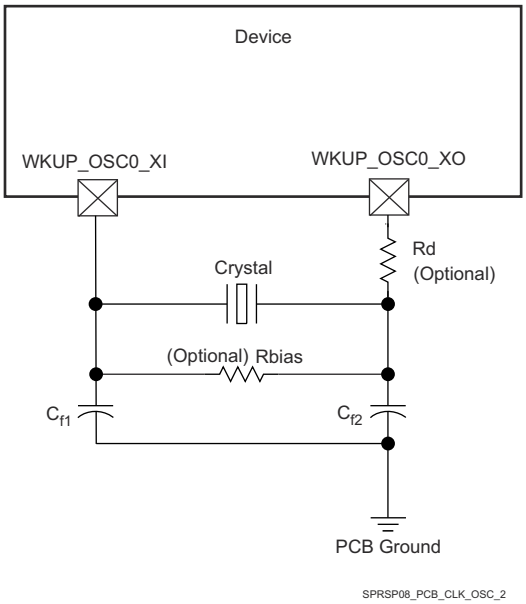

Figure 6-15. WKUP_OSC0 Crystal Implementation

Note

The load capacitors, C_{f1} and C_{f2} in the load capacitance equation (1) below, should be chosen such that the below equation is satisfied. C_L in the equation is the load specified by the crystal manufacturer. All discrete components used to implement the oscillator circuit should be placed as close as possible to the associated oscillator WKUP_OSC0_XI, WKUP_OSC0_XO, and VSS pins.

$$C_L = \frac{C_{f1} C_{f2}}{(C_{f1} + C_{f2})} \quad (1)$$

SPRS932_CLOCK_03

The crystal must be in the fundamental mode of operation and parallel resonant. Table 6-14 summarizes the required electrical constraints.

Table 6-14. WKUP_OSC0 Crystal Electrical Characteristics

NAME	DESCRIPTION			MIN	TYP	MAX	UNIT
f_p	Parallel resonance crystal frequency				19.2, 20, 24, 25, 26, 27		MHz
C_{f1}	C_{f1} load capacitance for crystal parallel resonance with $C_{f1} = C_{f2}$				12	24	pF
C_{f2}	C_{f2} load capacitance for crystal parallel resonance with $C_{f1} = C_{f2}$				12	24	pF
ESR(C_{f1},C_{f2})	Crystal ESR					100	Ω
C_O	Crystal shunt capacitance	ESR = 30 Ω ESR = 40 Ω	19.2 MHz, 20 MHz, 24 MHz, 25 MHz, 26 MHz, 27 MHz			7	pF
		ESR = 50 Ω	19.2 MHz, 20 MHz			7	pF
			24 MHz, 25 MHz, 26 MHz, 27 MHz			5	pF
		ESR = 60 Ω	19.2 MHz, 20 MHz			7	pF
			24 MHz, 25 MHz, 26 MHz, 27 MHz		Not Supported		-
		ESR = 80 Ω	19.2 MHz, 20 MHz			5	pF
			24 MHz, 25 MHz, 26 MHz, 27 MHz		Not Supported		-
		ESR = 100 Ω	19.2 MHz, 20 MHz			3	pF
			24 MHz, 25 MHz, 26 MHz, 27 MHz		Not Supported		-
L_M	Crystal motional inductance for f_p = 20 MHz				10.16		mH
C_M	Crystal motional capacitance				3.42		fF
$f_{j(WKUP_OSC0_XI)}$	Frequency accuracy, WKUP_OSC0_XI		Ethernet RGMII and RMII not used			±100	ppm
			Ethernet RGMII and RMII using derived clock			±50	

When selecting a crystal, the system design must consider the temperature and aging characteristics of a based on the worst case environment and expected life expectancy of the system.

Table 6-15 details the switching characteristics of the oscillator and the requirements of the input clock.

Table 6-15. WKUP_OSC0 Switching Characteristics – Crystal Mode

NAME	DESCRIPTION	MIN	TYP	MAX	UNIT
f_p	Oscillation frequency		19.2, 20, 24, 25, 26, 27		MHz
t_{sX}	Start-up time			2[(1)]	ms

(1) In order to meet the start-up time defined in this table, the crystal needs to be selected according to the following equation:
$T_{su} = K \times L_m / (R_o\text{-}ESR) + \Delta t$
where L_m is crystal motional inductance, R_O is the negative resistance of amplifier, ESR is the crystal Effective series resistance and K is a constant which represents the initial conditions. Δt is the time amplifier takes to reach its bias point after power down is released.

Copyright © 2023 Texas Instruments Incorporated

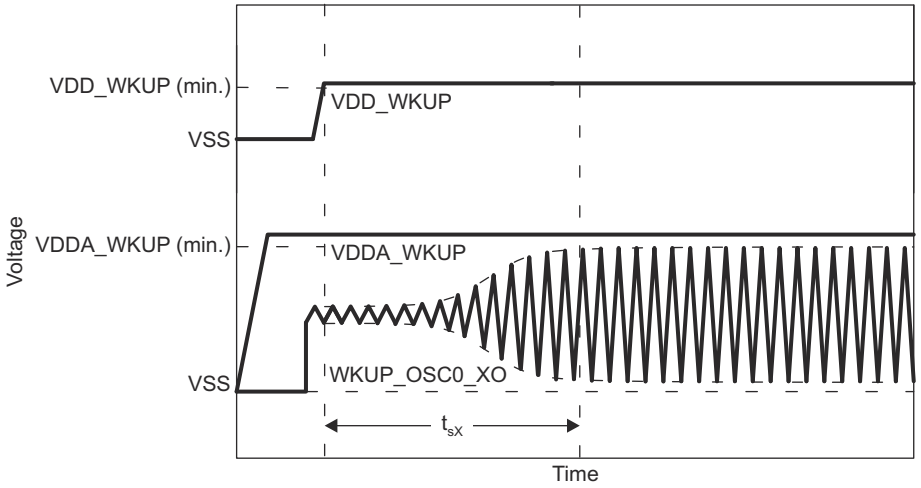

Figure 6-16. WKUP_OSC0 Start-up Time

6.9.4.1.2 WKUP_OSC0 LVCMOS Digital Clock Source

Figure 6-17 shows the recommended oscillator connections when WKUP_OSC0 is connected to an LVCMOS square-wave digital clock source The 1.8-V LVCMOS-Compatible clock source is connected to the WKUP_OSC0_XI pin. In this mode of operation, the WKUP_OSC0_XO pin is left unconnected and should not be used to source any external components.

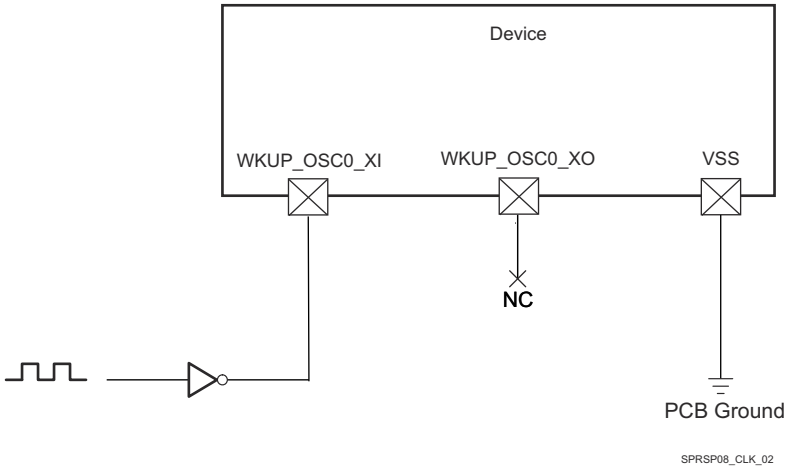

Figure 6-17. 1.8-V LVCMOS-Compatible Clock Input

Table 6-16 summarizes the WKUP_OSC0 input clock electrical characteristics

Table 6-16. WKUP_OSC0 Switching Characteristics – Crystal Mode

NAME	DESCRIPTION	MIN	TYP	MAX	UNIT
f	Frequency	19.2, 20, 24, 25, 26, 27			MHz
C_{IN}	Input capacitance	2.184	2.384	2.584	pF
I_{IN}	Input current (3.3V mode)	4	6	10	µA

Table 6-17 details the WKUP_OSC0 input clock timing requirements.

Table 6-17. WKUP_OSC0 Input Clock Timing Requirements

NAME	DESCRIPTION		MIN	TYP	MAX	UNIT
CK0	1 / $t_{c(WKUP_OSC0_XI)}$	Frequency, WKUP_OSC0_XI	19.2, 20, 24, 25, 26, 27			MHz

Copyright © 2023 Texas Instruments Incorporated

Table 6-17. WKUP_OSC0 Input Clock Timing Requirements (continued)

NAME	DESCRIPTION			MIN	TYP	MAX	UNIT
CK1	$t_{w(WKUP_OSC0_XI)}$	Pulse duration, WKUP_OSC0_XI low or high		0.45 × $t_{c(WKUP_OSC0_XI)}$		0.55 × $t_{c(WKUP_OSC0_XI)}$	ns
	$t_{j(WKUP_OSC0_XI)}$	Period jitter, WKUP_OSC0_XI				0.01 × $t_{c(WKUP_OSC0_XI)}$	ns
	$t_{R(WKUP_OSC0_XI)}$	Rise time, WKUP_OSC0_XI				5	ns
	$t_{F(WKUP_OSC0_XI)}$	Fall time, WKUP_OSC0_XI				5	ns
	$t_{j(WKUP_OSC0_XI)}$	Frequency accuracy, WKUP_OSC0_XI	Ethernet RGMII and RMII not used			±100	ppm
			Ethernet RGMII and RMII using derived clock			±50	



Figure 6-18. WKUP_OSC0_XI Input Clock

6.9.4.1.3 Auxiliary OSC1 Internal Oscillator Clock Source

Figure 6-19 shows the recommended crystal circuit. It is recommended that preproduction printed-circuit board (PCB) designs include the two optional resistors R_{bias} and R_d in case they are required for proper oscillator operation when combined with production crystal circuit components. In most cases, R_{bias} is not required and R_d is a 0-Ω resistor. These resistors may be removed from production PCB designs after evaluating oscillator performance with production crystal circuit components installed on preproduction PCBs.

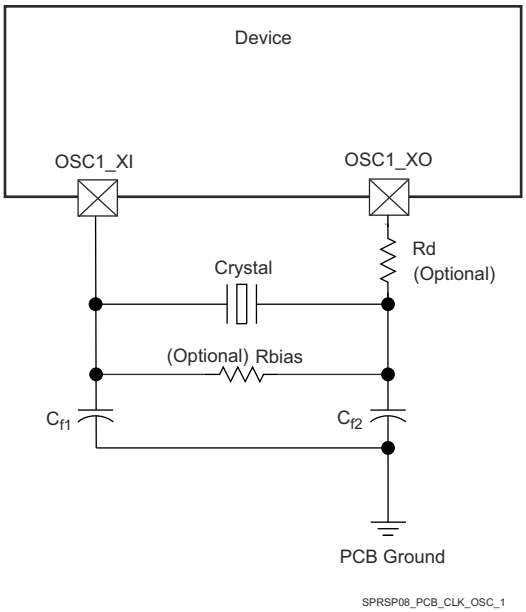

Figure 6-19. OSC1 Crystal Implementation

Note

The load capacitors, C_{f1} and C_{f2} in Figure 6-20, should be chosen such that the below equation is satisfied. C_L in the equation is the load specified by the crystal manufacturer. All discrete components used to implement the oscillator circuit should be placed as close as possible to the associated oscillator OSC1_XI, OSC1_XO, and VSS pins.

Copyright © 2023 Texas Instruments Incorporated

$$C_L = \frac{C_{f1} C_{f2}}{(C_{f1} + C_{f2})}$$

SPRS932_CLOCK_03

Figure 6-20. Load Capacitance Equation

The crystal must be in the fundamental mode of operation and parallel resonant. Table 6-18 summarizes the required electrical constraints.

Table 6-18. OSC1 Crystal Electrical Characteristics

NAME	DESCRIPTION			MIN	TYP	MAX	UNIT
f_p	Parallel resonance crystal frequency				19.2, 20, 24, 25, 26, 27		MHz
C_{f1}	C_{f1} load capacitance for crystal parallel resonance with $C_{f1} = C_{f2}$			12		24	pF
C_{f2}	C_{f2} load capacitance for crystal parallel resonance with $C_{f1} = C_{f2}$			12		24	pF
ESR(C_{f1},C_{f2})	Crystal ESR					100	Ω
C_O	Crystal shunt capacitance	ESR = 30 Ω ESR = 40 Ω	19.2 MHz, 20 MHz, 24 MHz, 25 MHz, 26 MHz, 27 MHz			7	pF
		ESR = 50 Ω	19.2 MHz, 20 MHz			7	pF
			24 MHz, 25 MHz, 26 MHz, 27 MHz			5	pF
		ESR = 60 Ω	19.2 MHz, 20 MHz			7	pF
			24 MHz, 25 MHz, 26 MHz, 27 MHz		Not Supported		-
		ESR = 80 Ω	19.2 MHz, 20 MHz			5	pF
			24 MHz, 25 MHz, 26 MHz, 27 MHz		Not Supported		-
		ESR = 100 Ω	19.2 MHz, 20 MHz			3	pF
			24 MHz, 25 MHz, 26 MHz, 27 MHz		Not Supported		-
L_M	Crystal motional inductance for f_p = 20 MHz				10.16		mH
C_M	Crystal motional capacitance				3.42		fF
$f_{j(OSC1_XI)}$	Frequency accuracy, OSC1_XI		Ethernet RGMII and RMII not used			±100	ppm
			Ethernet RGMII and RMII using derived clock			±50	

When selecting a crystal, the system design must consider the temperature and aging characteristics of a based on the worst case environment and expected life expectancy of the system.

Table 6-19 details the switching characteristics of the oscillator and the requirements of the input clock.

Table 6-19. OSC1 Switching Characteristics – Crystal Mode

NAME	DESCRIPTION	MIN	TYP	MAX	UNIT
f_p	Oscillation frequency		19.2, 20, 24, 25, 26, 27		MHz
t_{sX}	Start-up time			2(1)	ms

(1) In order to meet the start-up time defined in this table, the crystal needs to be selected according to the following equation:
Tsu = K×L_m/ (Ro-ESR) + Δt
where L_m is crystal motional inductance, R_O is the negative resistance of amplifier, ESR is the crystal Effective series resistance and K is a constant which represents the initial conditions. Δt is the time amplifier takes to reach its bias point after power down is released.

Copyright © 2023 Texas Instruments Incorporated

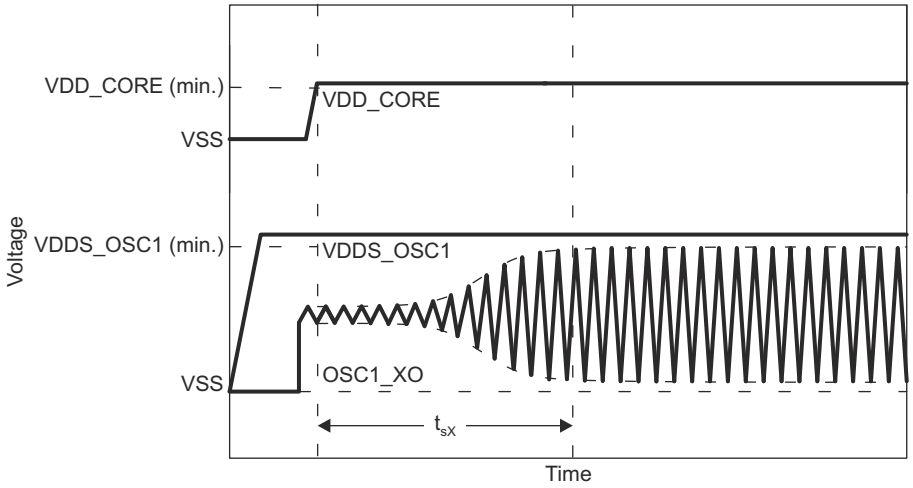

Figure 6-21. OSC1 Start-up Time

6.9.4.1.4 Auxiliary OSC1 LVCMOS Digital Clock Source

Figure 6-22 shows the recommended oscillator connections when OSC1 is connected to an LVCMOS square-wave digital clock source The 1.8-V LVCMOS-Compatible clock source is connected to the OSC1_XI pin. In this mode of operation, the OSC1_XO pin is left unconnected and should not be used to source any external components.

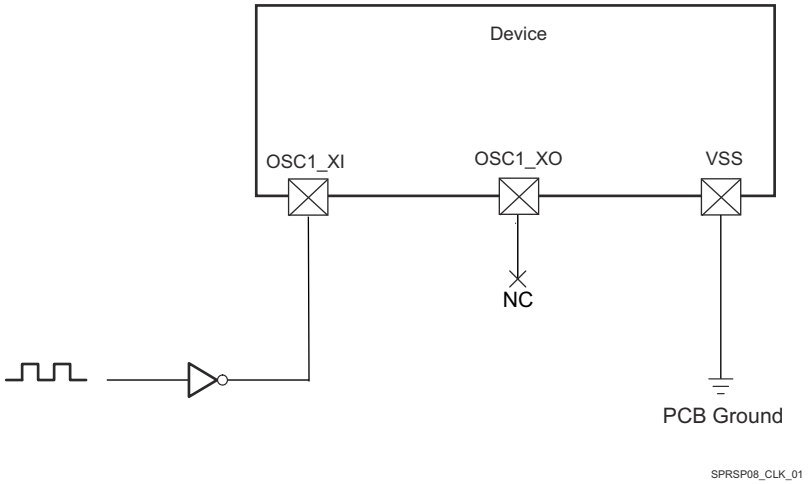

Figure 6-22. 1.8-V LVCMOS-Compatible Clock Input

Table 6-20 summarizes the OSC1 input clock electrical characteristics.

Table 6-20. OSC1 Switching Characteristics – Crystal Mode

NAME	DESCRIPTION	MIN	TYP	MAX	UNIT
f	Frequency	19.2, 20, 24, 25, 26, 27			MHz
C_{IN}	Input capacitance	2.184	2.384	2.584	pF
I_{IN}	Input current (3.3V mode)	4	6	10	µA

Table 6-21 details the OSC1 input clock timing requirements.

Table 6-21. OSC1 Input Clock Timing Requirements

NAME	DESCRIPTION		MIN	TYP	MAX	UNIT
CK0	1 / $t_{c(OSC1_XI)}$	Frequency, OSC1_XI	19.2, 20, 24, 25, 26, 27			MHz

Copyright © 2023 Texas Instruments Incorporated

Table 6-21. OSC1 Input Clock Timing Requirements (continued)

NAME	DESCRIPTION			MIN	TYP	MAX	UNIT
CK1	$t_{w(OSC1_XI)}$	Pulse duration, OSC1_XI low or high		0.45 × $t_{c(OSC1_XI)}$		0.55 × $t_{c(OSC1_XI)}$	ns
	$t_{j(OSC1_XI)}$	Period jitter, OSC1_XI				0.01 × $t_{c(OSC1_XI)}$	ns
	$t_{R(OSC1_XI)}$	Rise time, OSC1_XI				5	ns
	$t_{F(OSC1_XI)}$	Fall time, OSC1_XI				5	ns
	$t_{j(OSC1_XI)}$	Frequency accuracy, OSC1_XI	Ethernet RGMII and RMII not used			±100	ppm
			Ethernet RGMII and RMII using derived clock			±50	

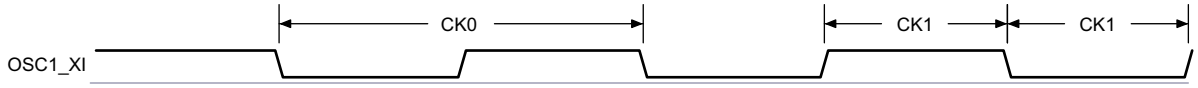

Figure 6-23. OSC1_XI Input Clock

6.9.4.1.5 Auxiliary OSC1 Not Used

For more Information see Section 5.5, *Connections for Unused Pins*.

6.9.4.1.6 WKUP_LFOSC0 Internal Oscillator Clock Source

Note

WKUP_LFOSC_XO/WKUP_LFOSC_XI - External main crystal interface pins connected to internal oscillator which sources reference clock provides a clock for low power operation in deeper sleep modes. For a list of supported low power modes for this device, please refer to *Overview of Device Low-Power Modes* section in the device TRM.

Figure 6-24 shows the recommended crystal circuit. It is recommended that preproduction printed-circuit board (PCB) designs include the two optional resistors R_{bias} and R_d in case they are required for proper oscillator operation when combined with production crystal circuit components. In most cases, R_{bias} is not required and R_d is a 0 ohm resistor. These resistors may be removed from production PCB designs after evaluating oscillator performance with production crystal circuit components installed on preproduction PCBs.

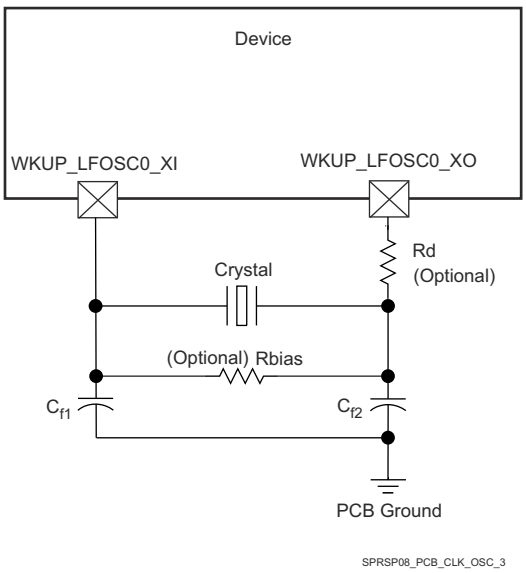

Figure 6-24. WKUP_LFOSC0 Crystal Implementation

Note

The load capacitors, C_{f1} and C_{f2} in Figure 6-25, should be chosen such that the below equation is satisfied. C_L in the equation is the load specified by the crystal manufacturer. All discrete components used to implement the oscillator circuit should be placed as close as possible to the associated oscillator WKUP_LFOSC0_XI, WKUP_LFOSC0_XO, and VSS pins.

$$C_L = \frac{C_{f1} C_{f2}}{(C_{f1} + C_{f2})}$$

SPRS932_CLOCK_03

Figure 6-25. Load Capacitance Equation

The crystal must be in the fundamental mode of operation and parallel resonant. Table 6-22 summarizes the required electrical constraints

Table 6-22. WKUP_LFOSC0 Crystal Electrical Characteristics

NAME	DESCRIPTION	MIN	TYP	MAX	UNIT
f_p	Parallel resonance crystal frequency		32768		Hz
C_{f1}	C_{f1} load capacitance for crystal parallel resonance with $C_{f1} = C_{f2}$	12		24	pF
C_{f2}	C_{f2} load capacitance for crystal parallel resonance with $C_{f1} = C_{f2}$	12		24	pF
C_{shunt}	Shunt capacitance			1.35	pF
ESR	Crystal effective series resistance			65	kΩ

When selecting a crystal, the system design must consider the temperature and aging characteristics of a based on the worst case environment and expected life expectancy of the system.

Table 6-23 details the switching characteristics of the oscillator and the requirements of the input clock.

Table 6-23. WKUP_LFOSC0 Switching Characteristics – Crystal Mode

NAME	DESCRIPTION	MIN	TYP	MAX	UNIT
f_{xtal}	Oscillation frequency		32768		Hz
t_{SX}	Start-up time			(1)	s

(1) In order to meet the start-up time defined in this table, the crystal needs to be selected according to the following equation:
$T_{su} = K \times L_m / (R_o\text{-}ESR) + \Delta t$
where L_m is crystal motional inductance, R_O is the negative resistance of amplifier, ESR is the crystal Effective series resistance and K is a constant which represents the initial conditions. Δt is the time amplifier takes to reach its bias point after power down is released.

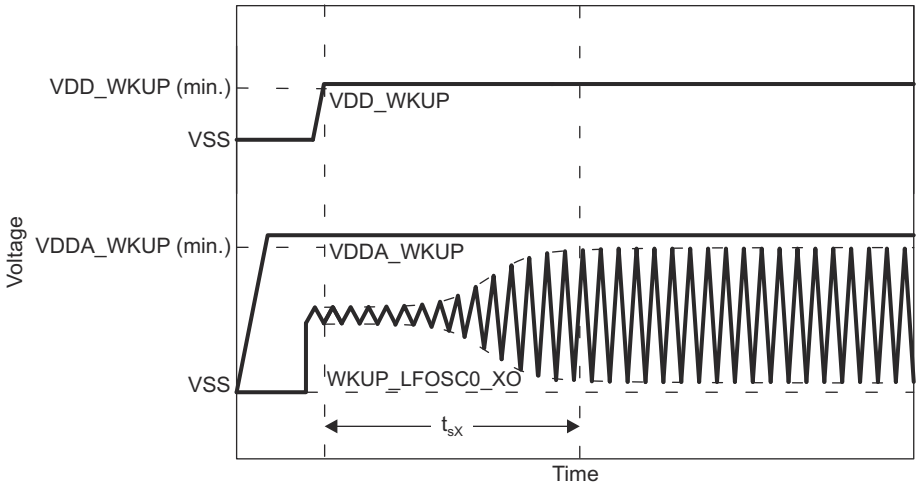

Figure 6-26. WKUP_LFOSC0 Start-up Time

Copyright © 2023 Texas Instruments Incorporated

6.9.4.1.7 WKUP_LFOSC0 LVCMOS Digital Clock Source

Note

WKUP_LFOSC_XO/WKUP_LFOSC_XI - External main crystal interface pins connected to internal oscillator which sources reference clock provides a clock for low power operation in deeper sleep modes. For a list of supported low power modes for this device, please refer to *Overview of Device Low-Power Modes* section in the device TRM.

Figure 6-27 shows the recommended oscillator connections when WKUP_LFOSC0 is connected to an LVCMOS square-wave digital clock source. The 1.8-V LVCMOS-Compatible clock source is connected to the WKUP_LFOSC0_XI pin. In this mode of operation, the WKUP_LFOSC0_XO pin is left unconnected and should not be used to source any external components.

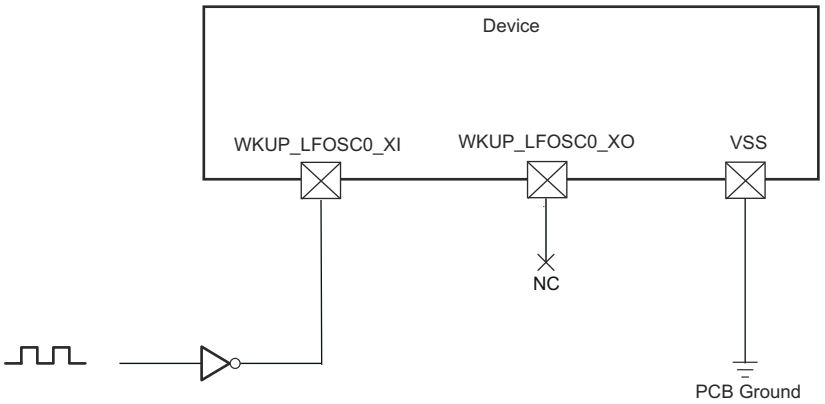

Figure 6-27. 1.8-V LVCMOS-Compatible Clock Input

Table 6-24 summarizes the WKUP_LFOSC0 input clock electrical characteristics.

Table 6-24. WKUP_LFOSC0 Oscillator Input Clock Electrical Characteristics—Bypass Mode

NAME		DESCRIPTION	MIN	TYP	MAX	UNIT
CK0	$1/t_{c(WKUP_LFOSC0_XI)}$	Frequency, WKUP_LFOSC0_XI			32.768	kHz
CK1	$t_{w(WKUP_LFOSC0_XI)}$	Pulse duration, WKUP_LFOSC0_XI low or high	0.45 × $t_{c(WKUP_LFOSC0_XI)}$		0.55 × $t_{c(WKUP_LFOSC0_XI)}$	ns
	C_{IN}	Input capacitance	2.178	2.378	2.578	pF
	I_{IN}	Input current (3.3V mode)	4	6	10	µA
	t_{sX}	Start-up time			see(1)	ms

(1) Before the processor boots up and the oscillator is set to bypass mode, there is a waiting time when the internal oscillator is in application mode and receives a wave. The switching time in this case is about 100 µs.



Figure 6-28. WKUP_LFOSC0_XI Input Clock

6.9.4.1.8 WKUP_LFOSC0 Not Used

For more Information see Section 5.5, *Connections for Unused Pins*.

6.9.4.2 Output Clocks

The device provides several system clock outputs. Summary of these output clocks are as follows:

- **MCU_SYSCLKOUT0**
  - SYSCLK0 of WKUP_PLLCTRL0 is divided by 4 and then sent out of the device as a LVCMOS clock signal (MCU_SYSCLKOUT0). This signal can be used to test if the main chip clock is functioning or not.
- **MCU_OBSCLK0**
  - On the clock output MCU_OBSCLK0, oscillators and PLLs clocks can be observed for tests and debug.
- **SYSCLKOUT0**
  - SYSCLK0 from the MAIN_PLL controller is divided by 4 and then sent out of the device as a LVCMOS clock signal (SYSCLKOUT0). This signal can be used to test if the main chip clock is functioning or not.
- **OBSCLK0**
  - On the clock output OBSCLK0, oscillators and PLLs clocks can be observed for tests and debug.

Copyright © 2023 Texas Instruments Incorporated

6.9.4.3 PLLs

Power is supplied to the PLL by internal regulators that derive power from the off-chip power-supply.

There are total nine Phase Locked Loops (PLLs) in the device:

- MCU_PLL0 (MCU PLL) with WKUP_PLL_CTRL0: The MCU PLL — which is used to drive the switch fabrics, accelerators, and a majority of the peripheral clocks — requires a PLL controller to manage the various clock divisions, gating, and synchronization in WKUP domain and MCU domain.
- MCU_PLL1 (CPSW PLL): The MCU_PLL1, which is used to drive the CPSW.
- PLL0 (MAIN PLL) with PLL_CTRL0: The Main PLL — which is used to drive the switch fabrics, accelerators, and a majority of the peripheral clocks — requires a PLL controller to manage the various clock divisions, gating, and synchronization in MAIN domain.
- PLL1 (PER0 PLL): The PER0 PLL, which is used to drive the Peripherals in MAIN Domain.
- PLL2 (PER1 PLL): The PER1 PLL, which is used to drive the PRU_ICSSG.
- PLL3 (DDR PLL): The DDR PLL is used to drive the DDR PHY for the DDRSS.
- PLL4 (DSS PLL): The DSS PLL, which is used to drive the Display Subsystem.
- PLL6 (ARM0 PLL): The ARM0 PLL, which is used to drive the ARM0.
- PLL7 (ARM1 PLL): The ARM1 PLL, which is used to drive the ARM1.

Most of the Device is driven by the output from the main PLL except the following items:

- Arm subsystem has its own dedicated PLL.
- MCU subsystem has its own dedicated PLL.
- EMIF DDR subsystem has its own dedicated PLL to drive DDR PHY and DDRSS.
- PRU_ICSSG has clocks sourced from several PLLs:
  - PER0 PLL to generate UART clock,
  - PER1 PLL to generate Core clock,
  - MAIN PLL to generate Industrial Ethernet Peripheral clock,
  - CPSW PLL to generate Ethernet clocks.
- DSS has its own dedicated PLL, to generate Pixel Clock.
- PCIESS require separate reference clocks to drive SERDES PHYs.

Note

For more information, see the:

- *Device Configuration*, *Clocking*, and *PLLs* sections of the device TRM
- *Peripherals* and *Display Subsystem* Overview sections of the device TRM
- *Programmable Real-Time Unit Subsystem and Industrial Communication Subsystem - Gigabit (PRU_ICSSG)* section of the device TRM

Note

The input reference clock (OSC1_XI/OSC1_XO) are specified and the lock time is ensured by the PLL controller, as documented in the *Device Configuration* chapter of the device TRM.

Copyright © 2023 Texas Instruments Incorporated

Figure 6-29 shows the power supply connectivity implemented in the device.

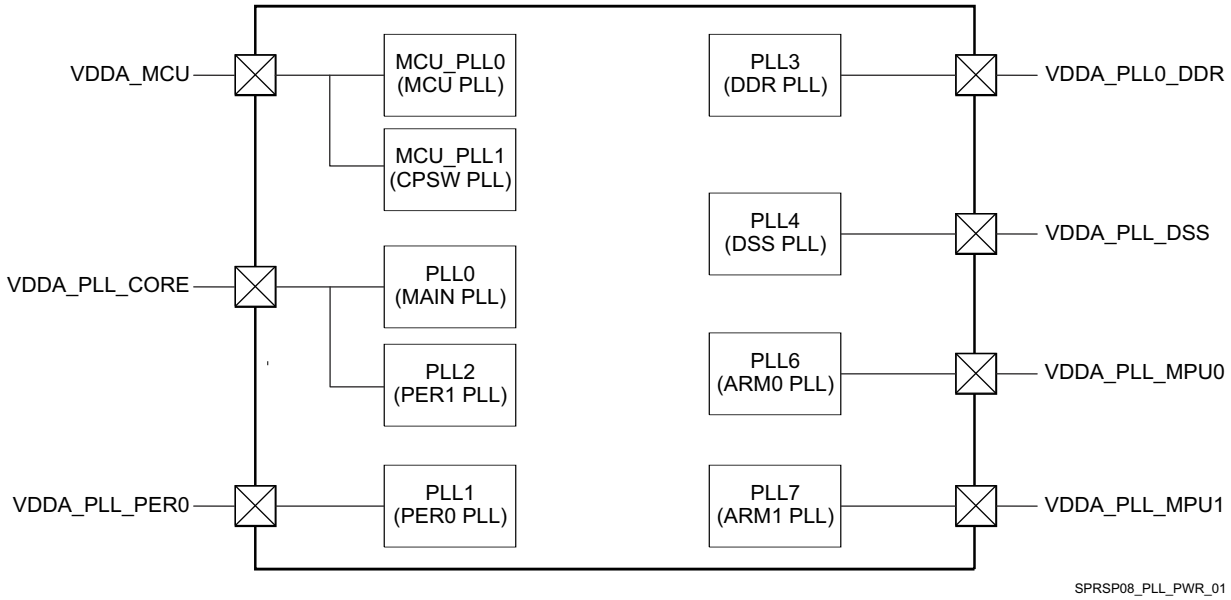

Figure 6-29. PLL Power Supply Connectivity

6.9.4.4 Recommended Clock and Control Signal Transition Behavior

All clocks and strobe signals must transition between V_{IH} and V_{IL} (or between V_{IL} and V_{IH}) in a monotonic manner. Monotonic transitions are more easily ensured with faster switching signals. Slower input transitions are more susceptible to glitches due to noise, and special care must be taken for slow input clocks.

6.9.4.5 Module and Peripheral Clock Frequencies

The maximum operating frequency associated with module functional and interface clocks internal to the device is managed by the DMSC firmware. For more details about the clocking structure for a specific module or peripheral, see *Device Configurations* chapter in the device TRM.

Section 6.9.5, *Peripherals* documents the maximum frequency associated with the peripheral clocks in and out of the device.

Copyright © 2023 Texas Instruments Incorporated

6.9.5 Peripherals

6.9.5.1 VIN

Table 6-26, Figure 6-30, and Figure 6-31 present timing requirements for LVDSRX interface.

Table 6-25 presents timing conditions for LVDSRX.

Table 6-25. LVDSRX Timing Conditions

PARAMETER		MODE	MIN	MAX	UNIT
INPUT CONDITIONS					
SR_I	Input slew rate	1.8 V	1.3	2.64	V/ns
		3.3 V	1.5	2.64	V/ns
PCB CONNECTIVITY REQUIREMENTS					
$t_{d(Trace\ Mismatch\ Delay)}$	Propagation delay mismatch across all traces			50	ps

Table 6-26. Timing Requirements for LVDSRX

NO.	PARAMETER	DESCRIPTION	MIN	MAX	UNIT
V1	$t_{c(PCLK)}$	Cycle time, VIN0_PCLK	5.76[1]		ns
V2	$t_{w(PCLKH)}$	Pulse duration, VIN0_PCLK high	0.45 × P[2]		ns
V3	$t_{w(PCLKL)}$	Pulse duration, VIN0_PCLK low	0.45 × P[2]		ns
V4	$t_{su(PCLK-CTL/DATA)}$	Input setup time, control (VIN0_HD, VIN0_VD) and data (VIN0_DATA[15:0]) valid to VIN0_PCLK transition	2.42		ns
V5	$t_{h(CTL/DAT-PCLK)}$	Input hold time, VIN0_PCLK transition to control (VIN0_HD, VIN0_VD) valid	0.52		ns

(1) For maximum frequency of 165 MHz
(2) P = VIN0_PCLK period

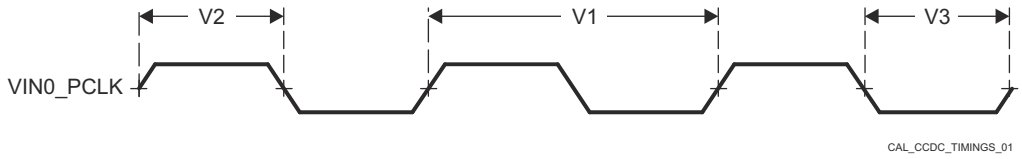

Figure 6-30. LVDSRX Input Clock Signal

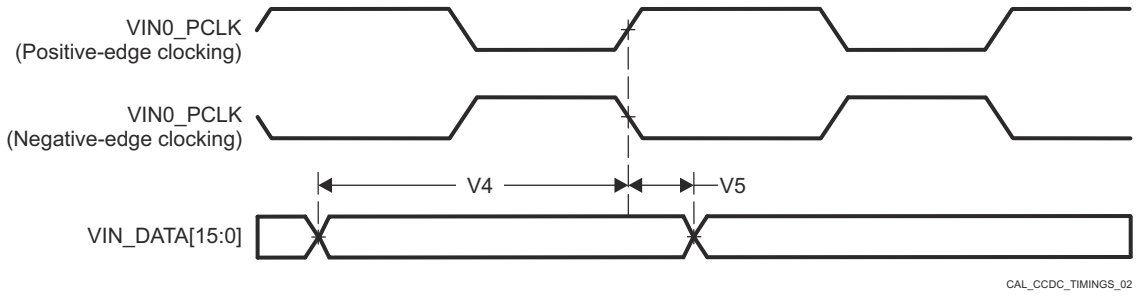

Figure 6-31. LVDSRX Input Timings

6.9.5.2 CPSW2G

For more details about features and additional description information on the device Gigabit Ethernet MAC, see the corresponding sections within Section 5.3, *Signal Descriptions* and Section 7, *Detailed Description*.

6.9.5.2.1 CPSW2G MDIO Interface Timings

Table 6-28, Table 6-29, and Figure 6-32 present timing requirements for MDIO.

Table 6-27 presents timing conditions for CPSW2G MDIO.

Copyright © 2023 Texas Instruments Incorporated

Table 6-27. CPSW2G MDIO Timing Conditions

PARAMETER		MIN	MAX	UNIT
INPUT CONDITIONS				
SR_I	Input slew rate	0.9	3.6	V/ns
OUTPUT CONDITIONS				
C_L	Output load capacitance	10	470	pF

Table 6-28. Timing Requirements for MDIO Input

NO.	PARAMETER		MIN	MAX	UNIT
MDIO1	$t_{su(MDIO_MDC)}$	Setup time, MDIO_MDIO valid before MDIO_MDC high	90		ns
MDIO2	$t_{h(MDIO_MDC)}$	Hold time, MDIO_MDIO valid after MDIO_MDC high	0		ns

Table 6-29. Switching Characteristics Over Recommended Operating Conditions for MDIO Output

NO.	PARAMETER		MIN	MAX	UNIT
MDIO3	$t_{c(MDC)}$	Cycle time, MDIO_MDC	400		ns
MDIO4	$t_{w(MDCH)}$	Pulse Duration, MDIO_MDC high	160		ns
MDIO5	$t_{w(MDCL)}$	Pulse Duration, MDIO_MDC low	160		ns
MDIO7	$t_{d(MDC_MDIO)}$	Delay time, MDIO_MDC low to MDIO_MDIO valid	-150	150	ns

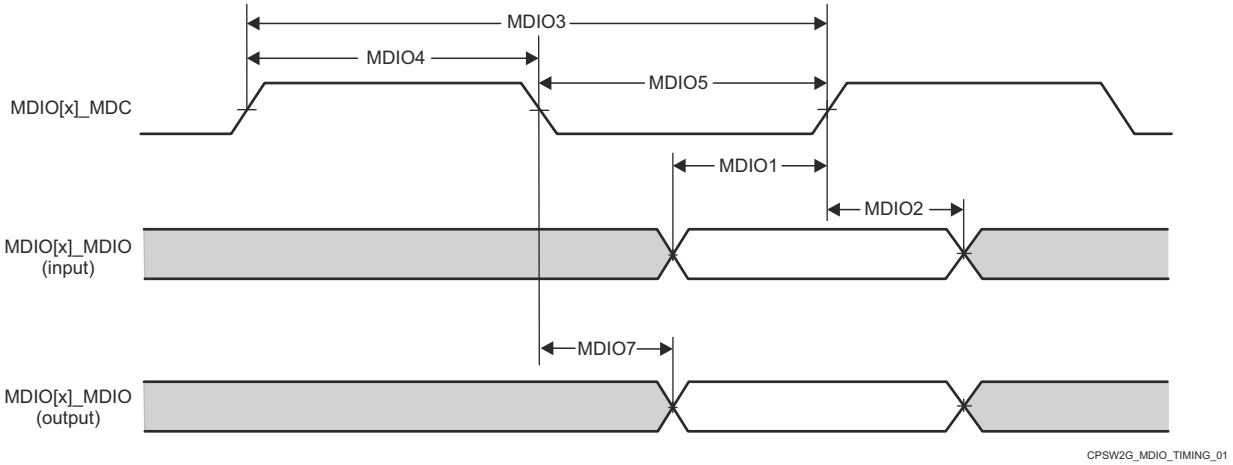

Figure 6-32. CPSW2G MDIO Diagrams Receive and Transmit

6.9.5.2.2 CPSW2G RMII Timings

Section 6.9.5.2.2.1, Section 6.9.5.2.2.2, Figure 6-33, and Figure 6-34 present timing requirements for CPSW2G RMII receive.

Table 6-30 presents timing conditions for CPSW2G RMII.

Table 6-30. CPSW2G RMII Timing Conditions

PARAMETER		MIN	MAX	UNIT
INPUT CONDITIONS				
SR_I	Input slew rate	0.9	3.6	V/ns
OUTPUT CONDITIONS				
C_L	Output load capacitance	3	25	pF

6.9.5.2.2.1 Timing Requirements for RMII[x]_REFCLK - RMII Mode

NO.	PARAMETER	DESCRIPTION	MIN	TYP	MAX	UNIT
RMII1	$t_{c(REF_CLK)}$	Cycle time, REF_CLK	19.999		20.001	ns

Copyright © 2023 Texas Instruments Incorporated

NO.	PARAMETER	DESCRIPTION	MIN	TYP	MAX	UNIT
RMII2	$t_{w(REF_CLKH)}$	Pulse Duration, REF_CLK High	7		13	ns
RMII3	$t_{w(REF_CLKL)}$	Pulse Duration, REF_CLK Low	7		13	ns

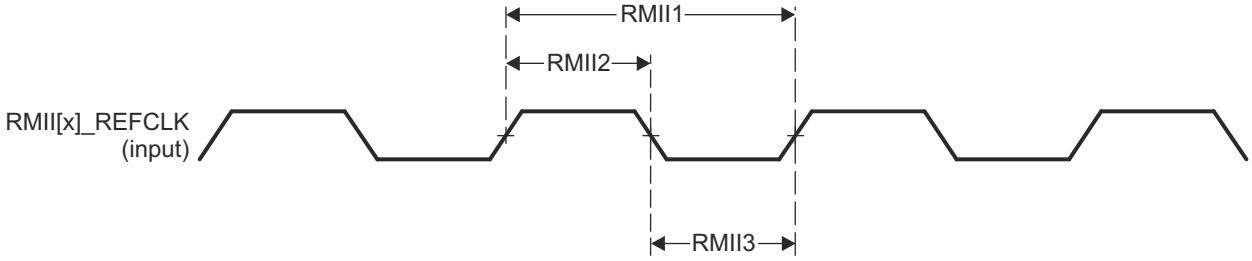

Figure 6-33. RMII[x]_REFCLK Timing - RMII Mode

6.9.5.2.2.2 Timing Requirements for RMII[x]_RXD[1:0], RMII[x]_CRS_DV, and RMII[x]_RXER - RMII Mode

NO.	PARAMETER	DESCRIPTION	MIN	TYP	MAX	UNIT
RMII4	$t_{su(RXD-REF_CLK)}$	Setup time, RXD[1:0] valid before REF_CLK	4			ns
	$t_{su(CRS_DV-REF_CLK)}$	Setup time, CRS_DV valid before REF_CLK	4			ns
	$t_{su(RX_ER-REF_CLK)}$	Setup time, RX_ER valid before REF_CLK	4			ns
RMII5	$t_{h(REF_CLK-RXD)}$	Hold time RXD[1:0] valid after REF_CLK	2			ns
	$t_{h(REF_CLK-CRS_DV)}$	Hold time, CRS_DV valid after REF_CLK	2			ns
	$t_{h(REF_CLK-RX_ER)}$	Hold time, RX_ER valid after REF_CLK	2			ns

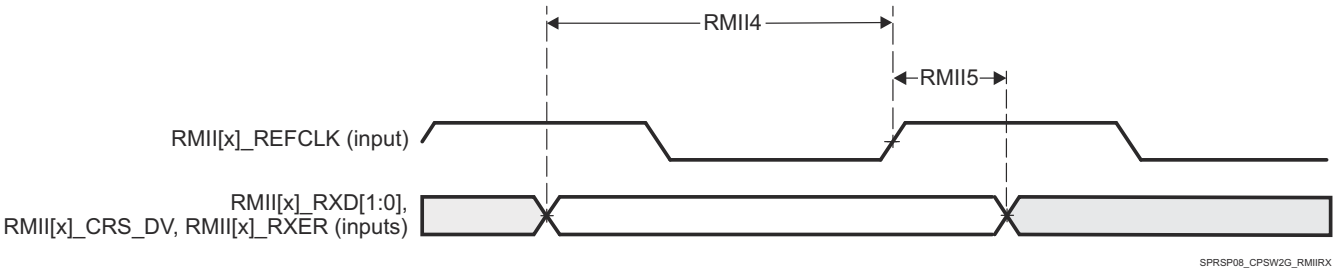

Figure 6-34. RMII[x]_RXD[1:0], RMII[x]_CRS_DV, RMII[x]_RXER Timing - RMII Mode

Section 6.9.5.2.2.3, and Section 6.9.5.2.2.3 present switching characteristics for CPSW2G RMII Transmit.

6.9.5.2.2.3 Switching Characteristics for RMII[x]_TXD[1:0], and RMII[x]_TXEN - RMII Mode

NO.	PARAMETER		MIN	TYP	MAX	UNIT
RMII6	$t_{d(REF_CLK-TXD)}$	Delay time, REF_CLK High to TXD[1:0] valid	2		13	ns
	$t_{d(REF_CLK-TXEN)}$	Delay time, REF_CLK to TXEN valid	2		13	ns

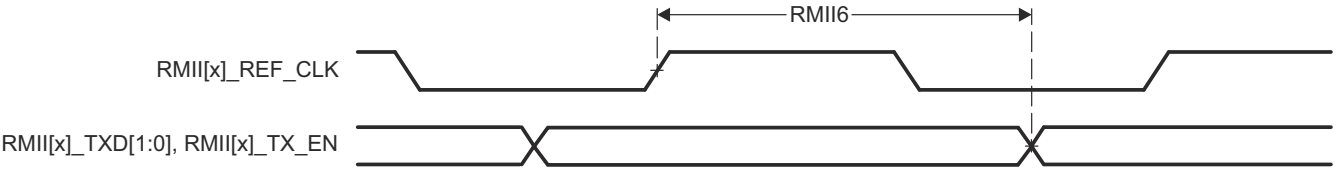

Figure 6-35. RMII[x]_TXD[1:0], and RMII[x]_TX_EN Switching Characteristics – RMII Mode

Copyright © 2023 Texas Instruments Incorporated

6.9.5.2.3 CPSW2G RGMII Timings

Section 6.9.5.2.3.1, Section 6.9.5.2.3.2, and Figure 6-36 present timing requirements for receive RGMII operation.

Table 6-31 presents timing conditions for CPSW2G RGMII.

Table 6-31. CPSW2G RGMII Timing Conditions

PARAMETER			MIN	MAX	UNIT
INPUT CONDITIONS					
SR_I	Input slew rate		2.64	5	V/ns
OUTPUT CONDITIONS					
C_L	Output load capacitance		2	20	pF
PCB CONNECTIVITY REQUIREMENTS					
$t_{d(Trace\ Mismatch\ Delay)}$	Propagation delay mismatch across all traces	RGMII[x]_RXC, RGMII[x]_RD[3:0], RGMII[x]_RX_CTL		50	ps
		RGMII[x]_TXC, RGMII[x]_TD[3:0], RGMII[x]_TX_CTL		50	ps

6.9.5.2.3.1 Timing Requirements for RGMII[x]_RCLK - RGMII Mode

NO.	PARAMETER	DESCRIPTION	MODE	MIN	TYP	MAX	UNIT
RGMII1	$t_{c(RXC)}$	Cycle time, RXC	10Mbps	360		440	ns
			100Mbps	36		44	ns
			1000Mbps	7.2		8.8	ns
RGMII2	$t_{w(RXCH)}$	Pulse duration, RXC high	10Mbps	160		240	ns
			100Mbps	16		24	ns
			1000Mbps	3.6		4.4	ns
RGMII3	$t_{w(RXCL)}$	Pulse duration, RXC low	10Mbps	160		240	ns
			100Mbps	16		24	ns
			1000Mbps	3.6		4.4	ns

6.9.5.2.3.2 Timing Requirements for RGMII[x]_RD[3:0], and RGMII[x]_RCTL - RGMII Mode

NO.	PARAMETER	DESCRIPTION	MODE	MIN	TYP	MAX	UNIT
RGMII4	$t_{su(RD-RXC)}$	Setup time, RD[3:0] valid before RXC high/low	10Mbps	1			ns
			100Mbps	1			ns
			1000Mbps	1			ns
	$t_{su(RX_CTL-RXC)}$	Setup time, RX_CTL valid before RXC high/low	10Mbps	1			ns
			100Mbps	1			ns
			1000Mbps	1			ns

Copyright © 2023 Texas Instruments Incorporated

NO.	PARAMETER	DESCRIPTION	MODE	MIN	TYP	MAX	UNIT
RGMII5	$t_{h(RXC-RD)}$	Hold time, RD[3:0] valid after RXC high/low	10Mbps	1			ns
			100Mbps	1			ns
			1000Mbps	1.15			ns
	$t_{h(RXC-RX_CTL)}$	Hold time, RX_CTL valid after RXC high/low	10Mbps	1			ns
			100Mbps	1			ns
			1000Mbps	1.15			ns

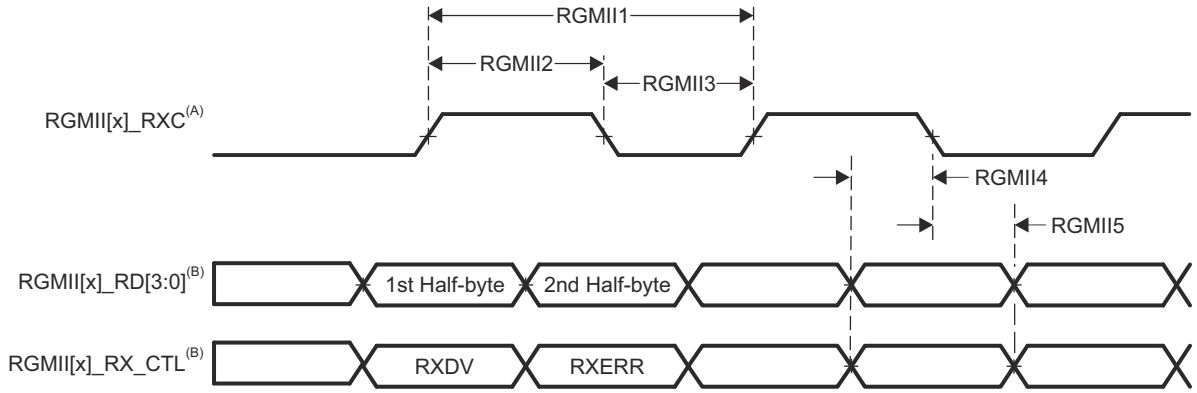

A. RGMII_RXC must be externally delayed relative to the data and control pins.

B. Data and control information is received using both edges of the clocks. RGMII_RXD[3:0] carries data bits 3-0 on the rising edge of RGMII_RXC and data bits 7-4 on the falling edge of RGMII_RXC. Similarly, RGMII_RXCTL carries RXDV on rising edge of RGMII_RXC and RXERR on falling edge of RGMII_RXC.

Figure 6-36. CPSW2G Receive Interface Timing, RGMII operation

Section 6.9.5.2.3.3, Section 6.9.5.2.3.4, and Figure 6-37 present switching characteristics for transmit - RGMII for 10 Mbps, 100 Mbps, and 1000 Mbps.

6.9.5.2.3.3 Switching Characteristics for RGMII[x]_TCLK - RGMII Mode

NO.	PARAMETER	DESCRIPTION	MODE	MIN	TYP	MAX	UNIT
RGMII1	$t_{c(TXC)}$	Cycle time, TXC	10Mbps	360		440	ns
			100Mbps	36		44	ns
			1000Mbps	7.2		8.8	ns
RGMII2	$t_{w(TXCH)}$	Pulse duration, TXC high	10Mbps	160		240	ns
			100Mbps	16		24	ns
			1000Mbps	3.6		4.4	ns
RGMII3	$t_{w(TXCL)}$	Pulse duration, TXC low	10Mbps	160		240	ns
			100Mbps	16		24	ns
			1000Mbps	3.6		4.4	ns

6.9.5.2.3.4 Switching Characteristics for RGMII[x]_TD[3:0], and RGMII[x]_TX_CTL - RGMII Mode

NO.	PARAMETER		MODE	MIN	TYP	MAX	UNIT
RGMII9	$t_{osu(TD-TXC)}$	Output setup time, RGMII[x]_TD[3:0] valid to RGMII[x]_TXC high/low	10/100 Mbps	1.2			ns
			1000 Mbps	1.05(1)			ns
	$t_{osu(TX_CTL-TXC)}$	Output setup time, RGMII[x]_TX_CTL valid to RGMII[x]_TXC high/low	10/100 Mbps	1.2			ns
			1000 Mbps	1.05(1)			ns

Copyright © 2023 Texas Instruments Incorporated

NO.	PARAMETER		MODE	MIN	TYP	MAX	UNIT
RGMII10	$t_{oh(TD-TXC)}$	Output hold time, RGMII[x]_TD[3:0] valid after RGMII[x]_TXC high/low	10/100 Mbps	1.2			ns
			1000 Mbps	1.05(1)			ns
	$t_{oh(TX_CTL-TXC)}$	Output hold time, RGMII[x]_TX_CTL valid after RGMII[x]_TXC high/low	10/100 Mbps	1.2			ns
			1000 Mbps	1.05(1)			ns

(1) 1000Mbps operation requires that the 4 data pins (RGMII[x]_TD[3:0]) and RGMII[x]_TX_CTL have their board propagation delays matched to within 50 ps of RGMII[x]_TXC.

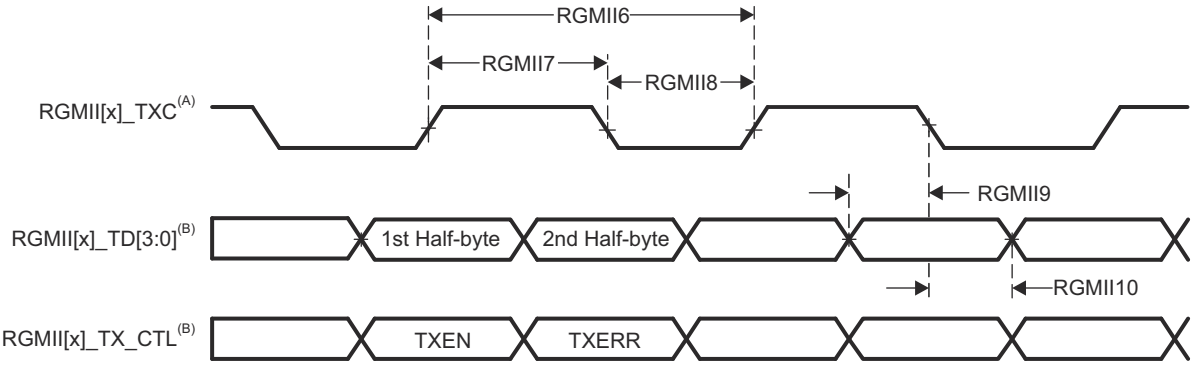

A. TXC is delayed internally before being driven to the RGMII[x]_TXC pin. This internal delay is always enabled.

B. Data and control information is received using both edges of the clocks. RGMII_TD[3:0] carries data bits 3-0 on the rising edge of RGMII_TXC and data bits 7-4 on the falling edge of RGMII_TXC. Similarly, RGMII_TX_CTL carries TXDV on rising edge of RGMII_TXC and RTXERR on falling edge of RGMII_TXC.

Figure 6-37. CPSW2G Transmit Interface Timing RGMII Mode

For more information, see section *Gigabit Ethernet MAC (MCU_CPSW0)* in the device TRM.

6.9.5.3 CSI2

Note

For more information, see section *Camera Adapter Layer (CAL) Subsystem* in the device TRM.

The camera adaptation layer (CAL) delas with the processing of pixel data coming from an external image sensor and data from memory. It is a key component for the following multimedia applications: camera viewfinder, video record, and still image capture.

The device includes one instantiation of CAL Subsystem named CALSS0, with a single companion CAMERARX0 instance.

CALSS0 is a very flexible subsystem that enables 3 different connections to cameras. It supports MIPI CSI-2 over D-PHY serial interface; a LVDS serial interface; and a traditional parallel interface.

The CALSS0 is compliant with the MIPI D-PHY RX specification v1.01.00 and the MIPI CSI-2 specification, with 4 data differential lanes plus 1 clock differential lane in synchronous mode, double data rate:

- 1.2 Gbps (600 MHz) for each lane.

6.9.5.4 DDRSS

For more details about features and additional description information on the device DDR4 Memory Interfaces, see the corresponding sections within Section 5.3, *Signal Descriptions* and Section 7, *Detailed Description*.

The device has dedicated interfaces to DDR4 SDRAM. It supports JESD79-4B standard-compliant DDR4 SDRAM devices with the following features:

- 16-bit or 32-bit data path to external SDRAM memory
- Memory device capacity: Up to 8 GB address space available over one chip select

Table 6-32 and Figure 6-38 present switching characteristics for DDRSS.

Copyright © 2023 Texas Instruments Incorporated

Table 6-32. Switching Characteristics for DDRSS

NO.	PARAMETER		DDR TYPE	MODE	MIN	MAX	UNIT
1	$t_{c(DDR_CKP/DDR_CKN)}$	Cycle time, DDR_CKP and DDR_CKN	DDR4		1.25	1.6	ns

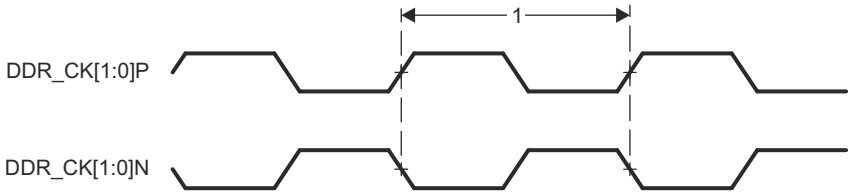

Figure 6-38. DDRSS Memory Interface Clock Timing

For more information, see section *DDR Subsystem (DDRSS)* in the device TRM.

6.9.5.5 DSS

For more details about features and additional description information on the device Display Subsystem – Video Output Ports, see the corresponding sections within Section 5.3, *Signal Descriptions* and Section 7, *Detailed Description*.

Table 6-33, Table 6-34, Figure 6-39 and Figure 6-40 assume testing over the recommended operating conditions and electrical characteristic conditions.

Table 6-33. DPI Video Output Switching Characteristics

NO.	PARAMETER		MIN	MAX	UNIT
D1	$t_{c(VOUT1_PCLK)}$	Cycle time, VOUT1_PCLK	6.06		ns
D2	$t_{w(VOUT1_PCLKL)}$	Pulse duration, VOUT1_PCLK low	0.475 * P(1)		ns
D3	$t_{w(VOUT1_PCLKH)}$	Pulse duration, VOUT1_PCLK high	0.475 * P(1)		ns
D4	$t_{d(VOUT1_PCLK-VOUT_DATA)}$	Delay time, VOUT1_PCLK to VOUT1_DATA[23:0]	-0.68	1.78	ns
D5	$t_{d(VOUT1_PCLK-VOUT_CTRL)}$	Delay time, VOUT1_PCLK to VOUT1_VSYNC, VOUT1_HSYNC, VOUT1_DE	-0.68	1.78	ns

(1) P = output VOUT1_PCLK period in ns.

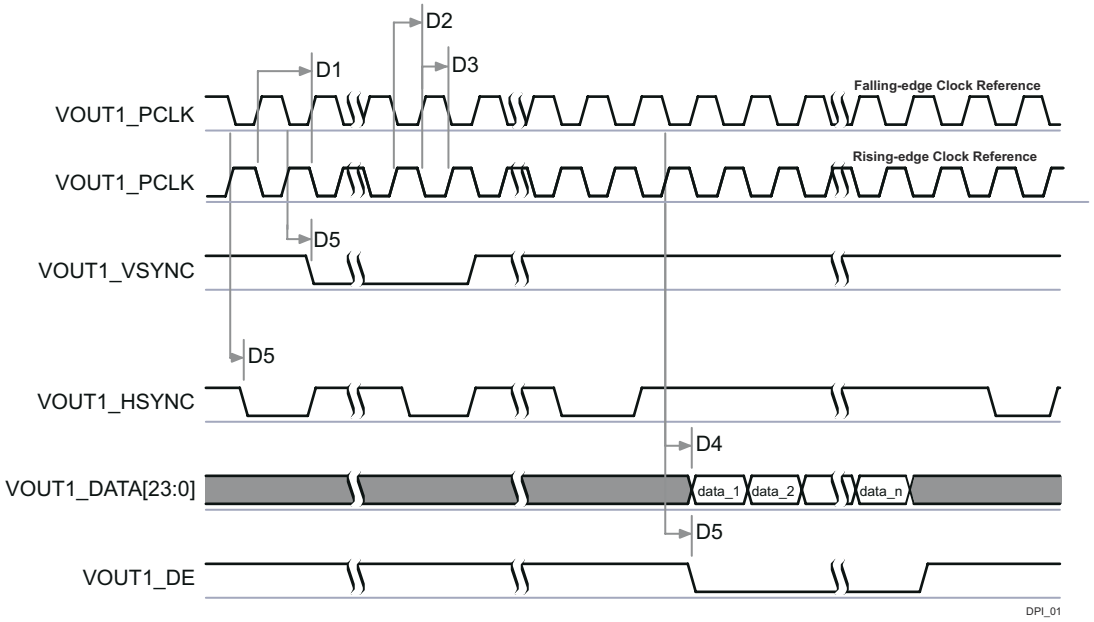

A. The configuration of assertion of the data can be programmed on the falling or rising edge of the pixel clock.
B. The polarity and the pulse width of VOUT1_HSYNC and VOUT1_VSYNC are programmable, refer to section *Display Subsystem (DSS)* in the device TRM.
C. The VOUT1_PCLK frequency can be configured, refer to section *Display Subsystem (DSS)* in the device TRM.

Figure 6-39. DPI Video Output

Copyright © 2023 Texas Instruments Incorporated

Table 6-34. DPI External Pixel Clock Input Timing Requirements

NO.			MIN	MAX	UNIT
D6	$t_{c(VOUT1_EXTPCLKIN)}$	Cycle time, VOUT1_EXTPCLKIN	6.06		ns
D7	$t_{w(VOUT1_EXTPCLKIN)}$	Pulse duration, VOUT1_EXTPCLKIN low	0.475 * P(1)		ns
D8	$t_{w(VOUT1_EXTPCLKIN)}$	Pulse duration, VOUT1_EXTPCLKIN high	0.475 * P(1)		ns

(1) P = output VOUT1_PCLK period in ns.

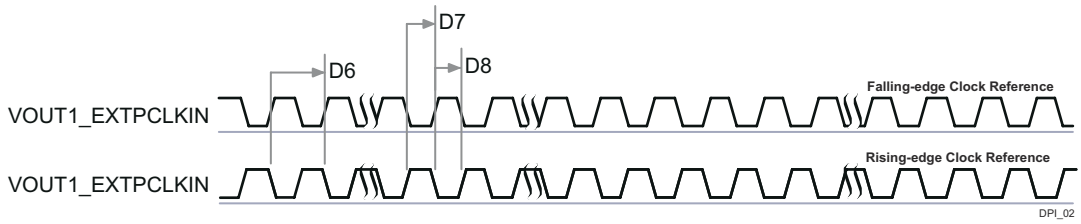

Figure 6-40. DPI External Pixel Clock Input

For more information, see section *Display Subsystem (DSS)* in the device TRM.

6.9.5.6 eCAP

The supported features by the device eCAP are:

- 32-bit time base counter
- 4-event time-stamp registers (each 32 bits)
- Independent edge polarity selection for up to four sequenced time-stamp capture events
- Interrupt capabilities on any of the four capture events
- Input capture signal pre-scaling (from 1 to 16)
- Support of different capture modes (single shot capture, continuous mode capture, absolute timestamp capture or difference mode time-stamp capture)

Table 6-35 represents eCAP timing conditions.

Table 6-35. eCAP Timing Conditionns

PARAMETER		MIN	MAX	UNIT
INPUT CONDITIONS				
SR_I	Input slew rate	1	4	V/ns
OUTPUT CONDITIONS				
C_L	Output load capacitance	2	7	pF

Section 6.9.5.6.1 and Section 6.9.5.6.2 present timing and switching characteristics for eCAP (see Figure 6-41 and Figure 6-42).

6.9.5.6.1 eCAP Timing Requirements

NO.	PARAMETER	DESCRIPTION	MIN	MAX	UNIT
CAP1	$t_{w(CAP)}$	Pulse duration, CAP (asynchronous)	3 + 2P(1)		ns

(1) P = sysclk period in ns.

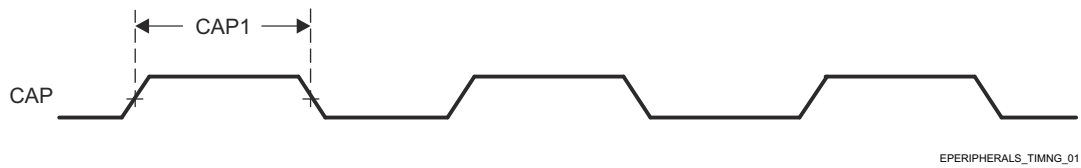

Figure 6-41. eCAP Timing Requirements

6.9.5.6.2 eCAP Switching Characteristics

NO.	PARAMETER	DESCRIPTION	MIN	MAX	UNIT
CAP2	$t_{w(APWM)}$	Pulse duration, APWMx	-3 + 2P[1]		ns

(1) P = sysclk period in ns.

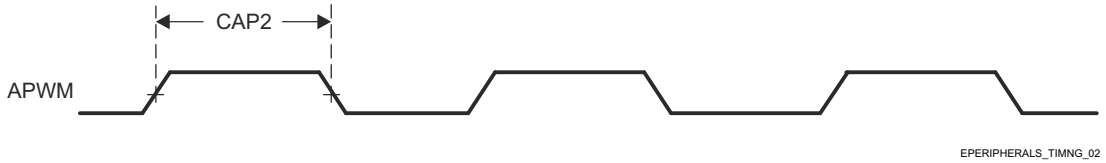

Figure 6-42. eCAP Switching Characteristics

For more information, see section *Enhanced Capture (ECAP) Module* in the device TRM.

6.9.5.7 ePWM

The supported features by the device ePWM are:

- Dedicated 16-bit time-base counter with period and frequency control
- Two independent PWM outputs which can be used in different configurations (with single-edge operation, with dual-edge symmetric operation or one independent PWM output with dual-edge asymmetric operation)
- Asynchronous override control of PWM signals during fault conditions
- Programmable phase-control support for lag or lead operation relative to other EPWM modules
- Dead-band generation with independent rising and falling edge delay control
- Programmable trip zone allocation of both latched and un-latched fault conditions
- Events enabling to trigger both CPU interrupts and start of ADC conversions

Table 6-36 represents ePWM timing conditions.

Table 6-36. ePWM Timing Conditionns

PARAMETER		MIN	MAX	UNIT
INPUT CONDITIONS				
SR_I	Input slew rate	1	4	V/ns
OUTPUT CONDITIONS				
C_L	Output load capacitance	2	7	pF

Section 6.9.5.7.1 and Section 6.9.5.7.2 present timing and switching characteristics for eHRPWM (see Figure 6-43, Figure 6-44, Figure 6-45, and Figure 6-46).

6.9.5.7.1 ePWM Timing Requirements

NO.	PARAMETER	DESCRIPTION	MIN	MAX	UNIT
PWM6	$t_{w(SYNCIN)}$	Pulse duration, eHRPWM_SYNCI	3 + 2P[1]		ns

Copyright © 2023 Texas Instruments Incorporated

NO.	PARAMETER	DESCRIPTION	MIN	MAX	UNIT
PWM7	$t_{w(TZ)}$	Pulse duration, eHRPWM_TZn_IN low	3 + 3P[1]		ns

(1) P = sysclk period in ns

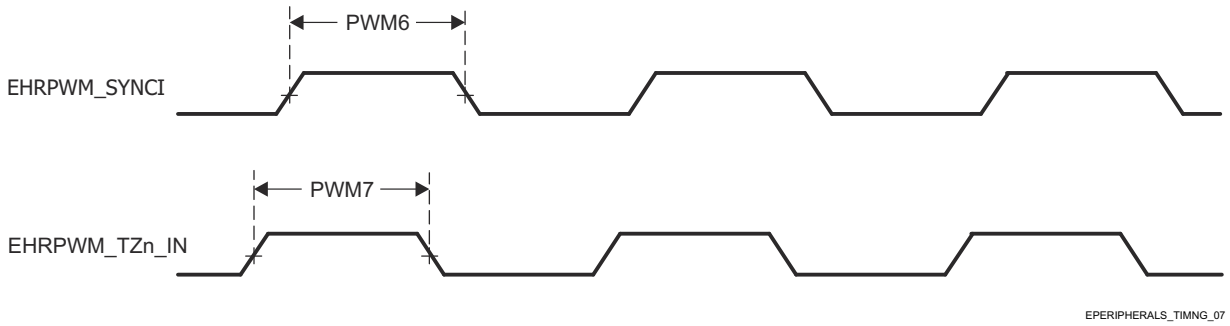

Figure 6-43. ePWM Timing Requirements

6.9.5.7.2 ePWM Switching Characteristics

NO.	PARAMETER	DESCRIPTION	MIN	MAX	UNIT
PWM1	$t_{w(PWM)}$	Pulse duration, EHRPWM_A/B high/low	-3 + P[1]		ns
PWM2	$t_{w(SYNCOUT)}$	Pulse duration, EHRPWM_SYNCO	-3 + P[1]		ns
PWM3	$t_{d(TZ-PWM)}$	Delay time, EHRPWM_TZn_IN active to EHRPWM_A/B forced high/low		11	ns
PWM4	$t_{d(TZ-PWMZ)}$	Delay time, EHRPWM_TZn_IN active to EHRPWM_A/B Hi-Z		11	ns

Copyright © 2023 Texas Instruments Incorporated

NO.	PARAMETER	DESCRIPTION	MIN	MAX	UNIT
PWM5	$t_{w(SOC)}$	Pulse duration, EHRPWM_SOCA/B output	-3 + P[1]		ns

(1) P = sysclk period in ns

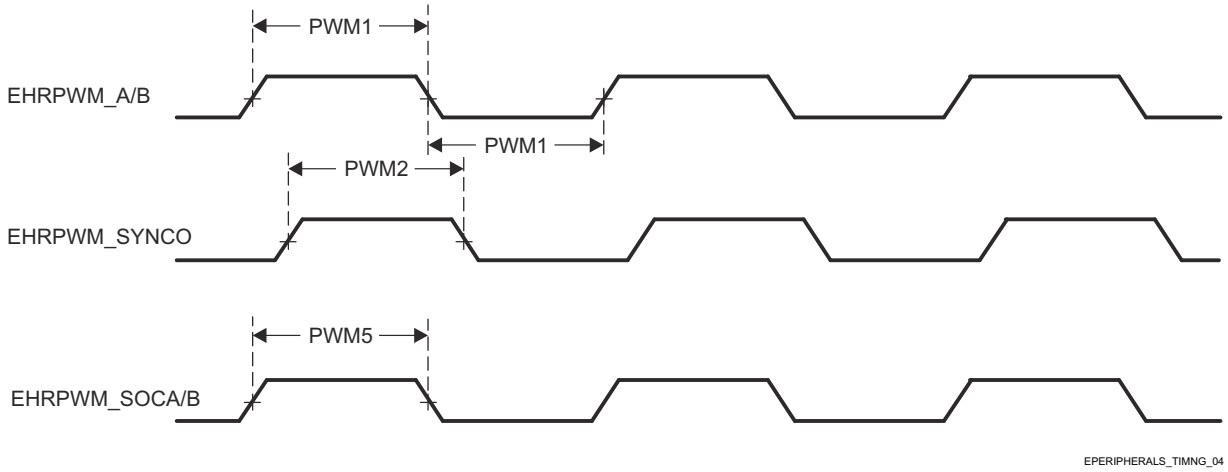

Figure 6-44. EHRPWM Switching Characteristics

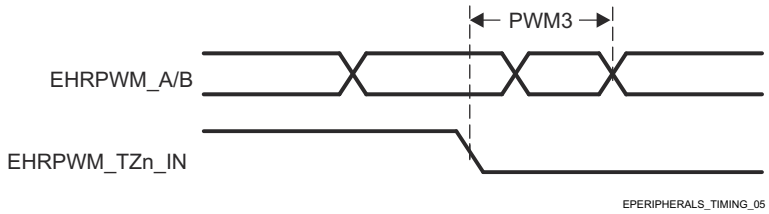

Figure 6-45. EHRPWM_TZn_IN to EHRPWM_A/B Forced Switching Characteristics

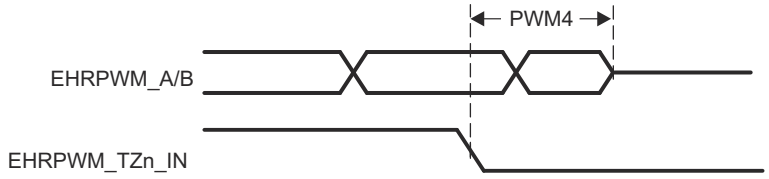

Figure 6-46. EHRPWM_TZn_IN to EHRPWM_A/B Hi-Z Switching Characteristics

For more information, see section *Enhanced Pulse Width Modulation (EPWM) Module* in the device TRM.

6.9.5.8 eQEP

The supported features by the device eQEP are:

- Input Synchronization
- Three Stage/Six Stage Digital Noise Filter
- Quadrature Decoder Unit
- Position Counter and Control unit for position measurement
- Quadrature Edge Capture unit for low speed measurement
- Unit Time base for speed/frequency measurement
- Watchdog Timer for detecting stalls

Table 6-37 represents eQEP timing conditions.

Copyright © 2023 Texas Instruments Incorporated

Table 6-37. eQEP Timing Conditionns

PARAMETER		MIN	MAX	UNIT
INPUT CONDITIONS				
SR_I	Input slew rate	1	4	V/ns
OUTPUT CONDITIONS				
C_L	Output load capacitance	2	7	pF

Section 6.9.5.8.1 and Section 6.9.5.8.2 present Timing Requirements and Switching Characteristics for eQEP (see Figure 6-47).

6.9.5.8.1 eQEP Timing Requirements

NO.	PARAMETER	DESCRIPTION	MIN	MAX	UNIT
QEP1	$t_{w(QEP)}$	Pulse duration, QEP_A/B	3 + 2P[1]		ns
QEP2	$t_{w(QEPIH)}$	Pulse duration, QEP_I high	3 + 2P[1]		ns
QEP3	$t_{w(QEPIL)}$	Pulse duration, QEP_I low	3 + 2P[1]		ns
QEP4	$t_{w(QEPSH)}$	Pulse duration, QEP_S high	3 + 2P[1]		ns
QEP5	$t_{w(QEPSL)}$	Pulse duration, QEP_S low	3 + 2P[1]		ns

(1) P = sysclk period in ns.

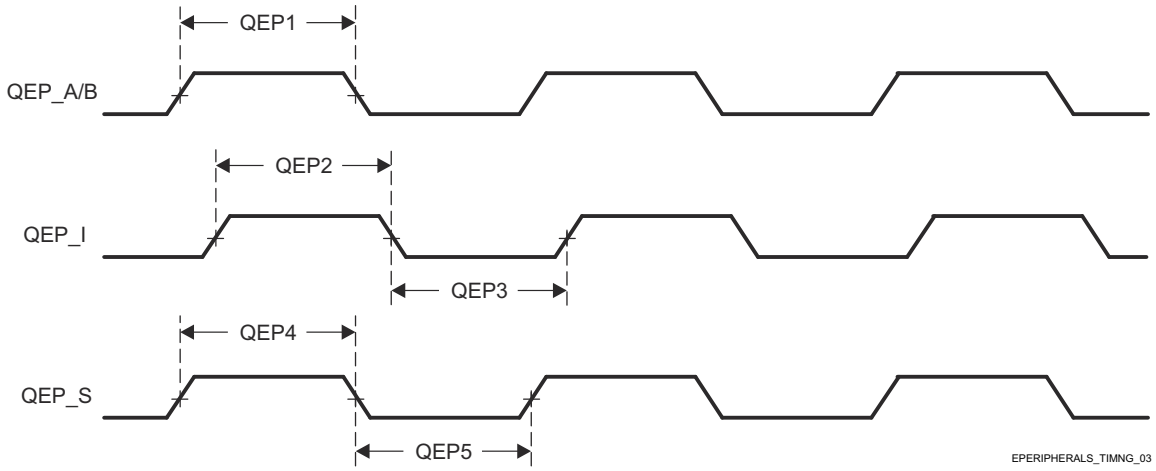

Figure 6-47. eQEP Timing Requirements

6.9.5.8.2 eQEP Switching Characteristics

NO.	PARAMETER	DESCRIPTION	MIN	MAX	UNIT
QEP6	$t_{d(QEP-CNTR)}$	Delay time, external clock to counter increment		24	ns

For more information, see section *Enhanced Quadrature Encoder Pulse (EQEP) Module* in the device TRM.

6.9.5.9 GPIO

The device has three instances of GPIO144 modules. The GPIO pins are grouped into banks (16 pins per bank), which means that each GPIO module provides up to 144 dedicated general-purpose pins with input and output capabilities; thus, the general-purpose interface supports up to 432 (3 instances × (9 banks × 16 pins)) pins. Since WKUP_GPIO0_[56:143], GPIO0_[96:143], and GPIO1_[90:143] are reserved in this Device, general purpose interface supports up to 242 pins.

For more details about features and additional description information on the device General-Purpose Interface, see the corresponding sections within Section 5.3, *Signal Descriptions* and Section 7, *Detailed Description*.

Copyright © 2023 Texas Instruments Incorporated

Note

The general-purpose input/output i (i = 0 to 1) is also referred to as GPIOi.

Table 6-38 presents timing conditions of the GPIO interface.

Table 6-38. GPIO Timing Conditions

PARAMETER	DESCRIPTION	MIN	MAX	UNIT
INPUT CONDITIONS				
SR_I	Input slew rate	0.75	6.6	V/ns
OUTPUT CONDITIONS				
C_L	Output load capacitance	3	10	pF

Section 6.9.5.9.1 and Section 6.9.5.9.2 present timings and switching characteristics of the GPIO Interface.

6.9.5.9.1 GPIO Timing Requirements

NO.	PARAMETER	DESCRIPTION	MIN	MAX	UNIT
GP2	$t_{w(GPIO_IN)}$	Minimum Input Pulse Width	3.6 + 2P(1)		ns

(1) P = functional clock period in ns.

6.9.5.9.2 GPIO Switching Characteristics

NO.	PARAMETER	DESCRIPTION	MIN	MAX	UNIT
GP1	$t_{w(GPIO_OUT)}$	Minimum Output Pulse Width	-4.6 + 0.975P(1)		ns

(1) P = functional clock period in ns.

For more information, see section *General-Purpose Interface (GPIO)* in the device TRM.

6.9.5.10 GPMC

For more details about features and additional description information on the device General-Purpose Memory Controller, see the corresponding sections within Section 5.3, *Signal Descriptions* and Section 7, *Detailed Description*.

Table 6-39 presents the timing conditions for GPMC.

Table 6-39. GPMC Timing Conditions

PARAMETER	DESCRIPTION	MIN	MAX	UNIT
Input Conditions				
SR_I	Input slew rate	1.65	4	V/ns
Output Conditions				
C_L	Output load capacitance	5	20	pF

6.9.5.10.1 GPMC and NOR Flash—Synchronous Mode

Section 6.9.5.10.1.1 and Section 6.9.5.10.1.2 assume testing over the recommended operating conditions and electrical characteristic conditions below (see Figure 6-48 through Figure 6-52).

Copyright © 2023 Texas Instruments Incorporated

6.9.5.10.1.1 GPMC and NOR Flash Timing Requirements—Synchronous Mode

NO.	PARAMETER	DESCRIPTION	MODE[2]	MIN	MAX	UNIT
F12	$t_{su(dV-clkH)}$	Setup time, input data GPMC_AD[15:0] valid before output clock GPMC_CLK high	div_by_1_mode; GPMC_FCLK_MUX_100; TIMEPARAGRANULARITY_X1	2.17		ns
			not_div_by_1_mode; GPMC_FCLK_MUX_100; TIMEPARAGRANULARITY_X1	3.46		ns
F13	$t_{h(clkH-dV)}$	Hold time, input data GPMC_AD[15:0] valid after output clock GPMC_CLK high	div_by_1_mode; GPMC_FCLK_MUX_100; TIMEPARAGRANULARITY_X1	1.78		ns
			not_div_by_1_mode; GPMC_FCLK_MUX_100; TIMEPARAGRANULARITY_X1	1.78		ns
F21	$t_{su(waitV-clkH)}$	Setup time, input wait GPMC_WAIT[x] valid before output clock GPMC_CLK high (1)	div_by_1_mode; GPMC_FCLK_MUX_100; TIMEPARAGRANULARITY_X1	2.17		ns
			not_div_by_1_mode; GPMC_FCLK_MUX_100; TIMEPARAGRANULARITY_X1	3.46		ns
F22	$t_{h(clkH-waitV)}$	Hold time, input wait GPMC_WAIT[x] valid after output clock GPMC_CLK high (1)	div_by_1_mode; GPMC_FCLK_MUX_100; TIMEPARAGRANULARITY_X1	1.78		ns
			not_div_by_1_mode; GPMC_FCLK_MUX_100; TIMEPARAGRANULARITY_X1	1.78		ns

(1) In GPMC_WAIT[x], x is equal to 0 or 1.
(2) For div_by_1_mode:

- GPMC_CONFIG1_i Register: GPMCFCLKDIVIDER = 0h:
  - GPMC_CLK frequency = GPMC_FCLK frequency

For not_div_by_1_mode:

- GPMC_CONFIG1_i Register: GPMCFCLKDIVIDER = 1h to 3h:
  - GPMC_CLK frequency = GPMC_FCLK frequency / (2 to 4)

For GPMC_FCLK_MUX_100:

- gpmc_fclk_sel[1:0] = 01 = PER1_PLL_CLKOUT / 3 = 300 / 3 = 100MHz

For TIMEPARAGRANULARITY_X1:

- GPMC_CONFIG1_i Register: TIMEPARAGRANULARITY = 0h = x1 latencies (affecting RD/WRCYCLETIME, RD/WRACCESSTIME, PAGEBURSTACCESSTIME, CSONTIME, CSRD/WROFFTIME, ADVONTIME, ADVRD/WROFFTIME, OEONTIME, OEOFFTIME, WEONTIME, WEOFFTIME, CYCLE2CYCLEDELAY, BUSTURNAROUND, TIMEOUTSTARTVALUE, WRDATAONADMUXBUS)

6.9.5.10.1.2 GPMC and NOR Flash Switching Characteristics—Synchronous Mode

NO.[2]	PARAMETER	DESCRIPTION	MODE[19]	MIN	MAX	UNIT
F0	tc(clk)	Period, output clock GPMC_CLK (18)	div_by_1_mode; GPMC_FCLK_MUX_100; TIMEPARAGRANULARITY_X1	10		ns
F1	$t_{w(clkH)}$	Typical pulse duration, output clock GPMC_CLK high	div_by_1_mode; GPMC_FCLK_MUX_100; TIMEPARAGRANULARITY_X1	-0.3+0.475*P (15)		ns
F1	$t_{w(clkL)}$	Typical pulse duration, output clock GPMC_CLK low	div_by_1_mode; GPMC_FCLK_MUX_100; TIMEPARAGRANULARITY_X1	-0.3+0.475*P (15)		ns

Copyright © 2023 Texas Instruments Incorporated

NO.[2]	PARAMETER	DESCRIPTION	MODE[19]	MIN	MAX	UNIT
F2	$t_{d(clkH-csnV)}$	Delay time, output clock GPMC_CLK rising edge to output chip select GPMC_CSn[x] transition [14]	div_by_1_mode; GPMC_FCLK_MUX_100; TIMEPARAGRANULARITY_X1; no extra_delay	-2.2+F [6]	4.5+F [6]	ns
F3	$t_{d(clkH-csnIV)}$	Delay time, output clock GPMC_CLK rising edge to output chip select GPMC_CSn[x] invalid [14]	div_by_1_mode; GPMC_FCLK_MUX_100; TIMEPARAGRANULARITY_X1; no extra_delay	-2.2+E [5]	4.5+E [5]	ns
F4	$t_{d(aV-clk)}$	Delay time, output address GPMC_A[27:1] valid to output clock GPMC_CLK first edge	div_by_1_mode; GPMC_FCLK_MUX_100; TIMEPARAGRANULARITY_X1	-2.3+B [2]	4.5+B [2]	ns
F5	$t_{d(clkH-aIV)}$	Delay time, output clock GPMC_CLK rising edge to output address GPMC_A[27:1] invalid	div_by_1_mode; GPMC_FCLK_MUX_100; TIMEPARAGRANULARITY_X1	-2.3	4.5	ns
F6	$t_{d(be[x]nV-clk)}$	Delay time, output lower byte enable and command latch enable GPMC_BE0n_CLE, output upper byte enable GPMC_BE1n valid to output clock GPMC_CLK first edge	div_by_1_mode; GPMC_FCLK_MUX_100; TIMEPARAGRANULARITY_X1	-2.3+B [2]	1.9+B [2]	ns
F7	$t_{d(clkH-be[x]nIV)}$	Delay time, output clock GPMC_CLK rising edge to output lower byte enable and command latch enable GPMC_BE0n_CLE, output upper byte enable GPMC_BE1n invalid [11]	div_by_1_mode; GPMC_FCLK_MUX_100; TIMEPARAGRANULARITY_X1	-2.3+D [4]	1.9+D [4]	ns
F7	$t_{d(clkL-be[x]nIV)}$	Delay time, GPMC_CLK falling edge to GPMC_BE0n_CLE, GPMC_BE1n invalid [12]	div_by_1_mode; GPMC_FCLK_MUX_100; TIMEPARAGRANULARITY_X1	-2.3+D [4]	1.9+D [4]	ns
F7	$t_{d(clkL-be[x]nIV).}$	Delay time, GPMC_CLK falling edge to GPMC_BE0n_CLE, GPMC_BE1n invalid [13]	div_by_1_mode; GPMC_FCLK_MUX_100; TIMEPARAGRANULARITY_X1	-2.3+D [4]	1.9+D [4]	ns
F8	$t_{d(clkH-advn)}$	Delay time, output clock GPMC_CLK rising edge to output address valid and address latch enable GPMC_ADVn_ALE transition	div_by_1_mode; GPMC_FCLK_MUX_100; TIMEPARAGRANULARITY_X1; no extra_delay	-2.3+G [7]	4.5+G [7]	ns
F9	$t_{d(clkH-advnIV)}$	Delay time, output clock GPMC_CLK rising edge to output address valid and address latch enable GPMC_ADVn_ALE invalid	div_by_1_mode; GPMC_FCLK_MUX_100; TIMEPARAGRANULARITY_X1; no extra_delay	-2.3+D [4]	4.5+D [4]	ns
F10	$t_{d(clkH-oen)}$	Delay time, output clock GPMC_CLK rising edge to output enable GPMC_OEn_REn transition	div_by_1_mode; GPMC_FCLK_MUX_100; TIMEPARAGRANULARITY_X1; no extra_delay	-2.3H [8]	3.5+H [8]	ns
F11	$t_{d(clkH-oenIV)}$	Delay time, output clock GPMC_CLK rising edge to output enable GPMC_OEn_REn invalid	div_by_1_mode; GPMC_FCLK_MUX_100; TIMEPARAGRANULARITY_X1; no extra_delay	-2.3+E [8]	3.5+E [8]	ns
F14	$t_{d(clkH-wen)}$	Delay time, output clock GPMC_CLK rising edge to output write enable GPMC_WEn transition	div_by_1_mode; GPMC_FCLK_MUX_100; TIMEPARAGRANULARITY_X1; no extra_delay	-2.3+I [9]	4.5+I [9]	ns
F15	$t_{d(clkH-do)}$	Delay time, output clock GPMC_CLK rising edge to output data GPMC_AD[15:0] transition [11]	div_by_1_mode; GPMC_FCLK_MUX_100; TIMEPARAGRANULARITY_X1	-2.3+J [10]	2.7+J [10]	ns
F15	$t_{d(clkL-do)}$	Delay time, GPMC_CLK falling edge to GPMC_AD[15:0] data bus transition [12]	div_by_1_mode; GPMC_FCLK_MUX_100; TIMEPARAGRANULARITY_X1	-2.3+J [10]	2.7+J [10]	ns
F15	$t_{d(clkL-do).}$	Delay time, GPMC_CLK falling edge to GPMC_AD[15:0] data bus transition [13]	div_by_1_mode; GPMC_FCLK_MUX_100; TIMEPARAGRANULARITY_X1	-2.3+J [10]	2.7+J [10]	ns
F17	$t_{d(clkH-be[x]n)}$	Delay time, output clock GPMC_CLK rising edge to output lower byte enable and command latch enable GPMC_BE0n_CLE transition [11]	div_by_1_mode; GPMC_FCLK_MUX_100; TIMEPARAGRANULARITY_X1	-2.3+J [10]	1.9+J [10]	ns

Copyright © 2023 Texas Instruments Incorporated

NO.[2]	PARAMETER	DESCRIPTION	MODE[19]	MIN	MAX	UNIT
F17	$t_{d(clkL-be[x]n)}$	Delay time, GPMC_CLK falling edge to GPMC_BE0n_CLE, GPMC_BE1n transition [12]	div_by_1_mode; GPMC_FCLK_MUX_100; TIMEPARAGRANULARITY_X1	-2.3+J [10]	1.9+J [10]	ns
F17	$t_{d(clkL-be[x]n).}$	Delay time, GPMC_CLK falling edge to GPMC_BE0n_CLE, GPMC_BE1n transition [13]	div_by_1_mode; GPMC_FCLK_MUX_100; TIMEPARAGRANULARITY_X1	-2.3+J [10]	1.9+J [10]	ns
F18	$t_{w(csnV)}$	Pulse duration, output chip select GPMC_CSn[x] low [14]	Read	0+A [1]		ns
			Write	0+A [1]		ns
F19	$t_{w(be[x]nV)}$	Pulse duration, output lower byte enable and command latch enable GPMC_BE0n_CLE, output upper byte enable GPMC_BE1n low	Read	0+C [3]		ns
			Write	0+C [3]		ns
F20	$t_{w(advnV)}$	Pulse duration, output address valid and address latch enable GPMC_ADVn_ALE low	Read	0+K [16]		ns
			Write	0+K [16]		ns

(1) For single read: A = (CSRdOffTime - CSOnTime) × (TimeParaGranularity + 1) × GPMC_FCLK[17]
For burst read: A = (CSRdOffTime - CSOnTime + (n - 1) × PageBurstAccessTime) × (TimeParaGranularity + 1) × GPMC_FCLK[17]
For burst write: A = (CSWrOffTime - CSOnTime + (n - 1) × PageBurstAccessTime) × (TimeParaGranularity + 1) × GPMC_FCLK[17]
With n being the page burst access number.

(2) B = ClkActivationTime × GPMC_FCLK[17]

(3) For single read: C = RdCycleTime × (TimeParaGranularity + 1) × GPMC_FCLK[17]
For burst read: C = (RdCycleTime + (n - 1) × PageBurstAccessTime) × (TimeParaGranularity + 1) × GPMC_FCLK[17]
For burst write: C = (WrCycleTime + (n - 1) × PageBurstAccessTime) × (TimeParaGranularity + 1) × GPMC_FCLK[17]
With n being the page burst access number.

(4) For single read: D = (RdCycleTime - AccessTime) × (TimeParaGranularity + 1) × GPMC_FCLK[17]
For burst read: D = (RdCycleTime - AccessTime) × (TimeParaGranularity + 1) × GPMC_FCLK[17]
For burst write: D = (WrCycleTime - AccessTime) × (TimeParaGranularity + 1) × GPMC_FCLK[17]

(5) For single read: E = (CSRdOffTime - AccessTime) × (TimeParaGranularity + 1) × GPMC_FCLK[17]
For burst read: E = (CSRdOffTime - AccessTime) × (TimeParaGranularity + 1) × GPMC_FCLK[17]
For burst write: E = (CSWrOffTime - AccessTime) × (TimeParaGranularity + 1) × GPMC_FCLK[17]

(6) For csn falling edge (CS activated):

- Case GpmcFCLKDivider = 0:
  - F = 0.5 × CSExtraDelay × GPMC_FCLK[17]
- Case GpmcFCLKDivider = 1:
  - F = 0.5 × CSExtraDelay × GPMC_FCLK[17] if (ClkActivationTime and CSOnTime are odd) or (ClkActivationTime and CSOnTime are even)
  - F = (1 + 0.5 × CSExtraDelay) × GPMC_FCLK[17] otherwise
- Case GpmcFCLKDivider = 2:
  - F = 0.5 × CSExtraDelay × GPMC_FCLK[17] if ((CSOnTime - ClkActivationTime) is a multiple of 3)
  - F = (1 + 0.5 × CSExtraDelay) × GPMC_FCLK[17] if ((CSOnTime - ClkActivationTime - 1) is a multiple of 3)
  - F = (2 + 0.5 × CSExtraDelay) × GPMC_FCLK[17] if ((CSOnTime - ClkActivationTime - 2) is a multiple of 3)

(7) For ADV falling edge (ADV activated):

- Case GpmcFCLKDivider = 0:
  - G = 0.5 × ADVExtraDelay × GPMC_FCLK[17]
- Case GpmcFCLKDivider = 1:
  - G = 0.5 × ADVExtraDelay × GPMC_FCLK[17] if (ClkActivationTime and ADVOnTime are odd) or (ClkActivationTime and ADVOnTime are even)
  - G = (1 + 0.5 × ADVExtraDelay) × GPMC_FCLK[17] otherwise
- Case GpmcFCLKDivider = 2:
  - G = 0.5 × ADVExtraDelay × GPMC_FCLK[17] if ((ADVOnTime - ClkActivationTime) is a multiple of 3)
  - G = (1 + 0.5 × ADVExtraDelay) × GPMC_FCLK[17] if ((ADVOnTime - ClkActivationTime - 1) is a multiple of 3)
  - G = (2 + 0.5 × ADVExtraDelay) × GPMC_FCLK[17] if ((ADVOnTime - ClkActivationTime - 2) is a multiple of 3)

For ADV rising edge (ADV deactivated) in Reading mode:

- Case GpmcFCLKDivider = 0:
  - G = 0.5 × ADVExtraDelay × GPMC_FCLK[17]
- Case GpmcFCLKDivider = 1:

  - G = 0.5 × ADVExtraDelay × GPMC_FCLK(17) if (ClkActivationTime and ADVRdOffTime are odd) or (ClkActivationTime and ADVRdOffTime are even)
  - G = (1 + 0.5 × ADVExtraDelay) × GPMC_FCLK(17) otherwise
- Case GpmcFCLKDivider = 2:
  - G = 0.5 × ADVExtraDelay × GPMC_FCLK(17) if ((ADVRdOffTime - ClkActivationTime) is a multiple of 3)
  - G = (1 + 0.5 × ADVExtraDelay) × GPMC_FCLK(17) if ((ADVRdOffTime - ClkActivationTime - 1) is a multiple of 3)
  - G = (2 + 0.5 × ADVExtraDelay) × GPMC_FCLK(17) if ((ADVRdOffTime - ClkActivationTime - 2) is a multiple of 3)

For ADV rising edge (ADV deactivated) in Writing mode:

- Case GpmcFCLKDivider = 0:
  - G = 0.5 × ADVExtraDelay × GPMC_FCLK(17)
- Case GpmcFCLKDivider = 1:
  - G = 0.5 × ADVExtraDelay × GPMC_FCLK(17) if (ClkActivationTime and ADVWrOffTime are odd) or (ClkActivationTime and ADVWrOffTime are even)
  - G = (1 + 0.5 × ADVExtraDelay) × GPMC_FCLK(17) otherwise
- Case GpmcFCLKDivider = 2:
  - G = 0.5 × ADVExtraDelay × GPMC_FCLK(17) if ((ADVWrOffTime - ClkActivationTime) is a multiple of 3)
  - G = (1 + 0.5 × ADVExtraDelay) × GPMC_FCLK(17) if ((ADVWrOffTime - ClkActivationTime - 1) is a multiple of 3)
  - G = (2 + 0.5 × ADVExtraDelay) × GPMC_FCLK(17) if ((ADVWrOffTime - ClkActivationTime - 2) is a multiple of 3)

(8) For OE falling edge (OE activated) and IO DIR rising edge (Data Bus input direction):

- Case GpmcFCLKDivider = 0:
  - H = 0.5 × OEExtraDelay × GPMC_FCLK(17)
- Case GpmcFCLKDivider = 1:
  - H = 0.5 × OEExtraDelay × GPMC_FCLK(17) if (ClkActivationTime and OEOnTime are odd) or (ClkActivationTime and OEOnTime are even)
  - H = (1 + 0.5 × OEExtraDelay) × GPMC_FCLK(17) otherwise
- Case GpmcFCLKDivider = 2:
  - H = 0.5 × OEExtraDelay × GPMC_FCLK(17) if ((OEOnTime - ClkActivationTime) is a multiple of 3)
  - H = (1 + 0.5 × OEExtraDelay) × GPMC_FCLK(17) if ((OEOnTime - ClkActivationTime - 1) is a multiple of 3)
  - H = (2 + 0.5 × OEExtraDelay) × GPMC_FCLK(17) if ((OEOnTime - ClkActivationTime - 2) is a multiple of 3)

For OE rising edge (OE deactivated):

- Case GpmcFCLKDivider = 0:
  - H = 0.5 × OEExtraDelay × GPMC_FCLK(17)
- Case GpmcFCLKDivider = 1:
  - H = 0.5 × OEExtraDelay × GPMC_FCLK(17) if (ClkActivationTime and OEOffTime are odd) or (ClkActivationTime and OEOffTime are even)
  - H = (1 + 0.5 × OEExtraDelay) × GPMC_FCLK(17) otherwise
- Case GpmcFCLKDivider = 2:
  - H = 0.5 × OEExtraDelay × GPMC_FCLK(17) if ((OEOffTime - ClkActivationTime) is a multiple of 3)
  - H = (1 + 0.5 × OEExtraDelay) × GPMC_FCLK(17) if ((OEOffTime - ClkActivationTime - 1) is a multiple of 3)
  - H = (2 + 0.5 × OEExtraDelay) × GPMC_FCLK(17) if ((OEOffTime - ClkActivationTime - 2) is a multiple of 3)

(9) For WE falling edge (WE activated):

- Case GpmcFCLKDivider = 0:
  - I = 0.5 × WEExtraDelay × GPMC_FCLK(17)
- Case GpmcFCLKDivider = 1:
  - I = 0.5 × WEExtraDelay × GPMC_FCLK(17) if (ClkActivationTime and WEOnTime are odd) or (ClkActivationTime and WEOnTime are even)
  - I = (1 + 0.5 × WEExtraDelay) × GPMC_FCLK(17) otherwise
- Case GpmcFCLKDivider = 2:
  - I = 0.5 × WEExtraDelay × GPMC_FCLK(17) if ((WEOnTime - ClkActivationTime) is a multiple of 3)
  - I = (1 + 0.5 × WEExtraDelay) × GPMC_FCLK(17) if ((WEOnTime - ClkActivationTime - 1) is a multiple of 3)
  - I = (2 + 0.5 × WEExtraDelay) × GPMC_FCLK(17) if ((WEOnTime - ClkActivationTime - 2) is a multiple of 3)

For WE rising edge (WE deactivated):

Copyright © 2023 Texas Instruments Incorporated

- Case GpmcFCLKDivider = 0:
  - I = 0.5 × WEExtraDelay × GPMC_FCLK (17)
- Case GpmcFCLKDivider = 1:
  - I = 0.5 × WEExtraDelay × GPMC_FCLK(17) if (ClkActivationTime and WEOffTime are odd) or (ClkActivationTime and WEOffTime are even)
  - I = (1 + 0.5 × WEExtraDelay) × GPMC_FCLK(17) otherwise
- Case GpmcFCLKDivider = 2:
  - I = 0.5 × WEExtraDelay × GPMC_FCLK(17) if ((WEOffTime - ClkActivationTime) is a multiple of 3)
  - I = (1 + 0.5 × WEExtraDelay) × GPMC_FCLK(17) if ((WEOffTime - ClkActivationTime - 1) is a multiple of 3)
  - I = (2 + 0.5 × WEExtraDelay) × GPMC_FCLK(17) if ((WEOffTime - ClkActivationTime - 2) is a multiple of 3)

(10) J = GPMC_FCLK(17)
(11) First transfer only for CLK DIV 1 mode.
(12) Half cycle; for all data after initial transfer for CLK DIV 1 mode.
(13) Half cycle of GPMC_CLK_OUT; for all data for modes other than CLK DIV 1 mode. GPMC_CLK_OUT divide down from GPMC_FCLK.
(14) In GPMC_CSn[x], x is equal to 0, 1, 2 or 3. In GPMC_WAIT[x], x is equal to 0 or 1.
(15) P = GPMC_CLK period in ns
(16) For read: K = (ADVRdOffTime - ADVOnTime) × (TimeParaGranularity + 1) × GPMC_FCLK(17)
For write: K = (ADVWrOffTime - ADVOnTime) × (TimeParaGranularity + 1) × GPMC_FCLK(17)
(17) GPMC_FCLK is general-purpose memory controller internal functional clock period in ns.
(18) Related to the GPMC_CLK output clock maximum and minimum frequencies programmable in the GPMC module by setting the GPMC_CONFIG1_CSx configuration register bit field GpmcFCLKDivider.
(19) For div_by_1_mode:

- GPMC_CONFIG1_i Register: GPMCFCLKDIVIDER = 0h:
  - GPMC_CLK frequency = GPMC_FCLK frequency

For GPMC_FCLK_MUX_100:

- gpmc_fclk_sel[1:0] = 01 = PER1_PLL_CLKOUT / 3 = 300 / 3 = 100MHz

For TIMEPARAGRANULARITY_X1:

- GPMC_CONFIG1_i Register: TIMEPARAGRANULARITY = 0h = x1 latencies (affecting RD/WRCYCLETIME, RD/WRACCESSTIME, PAGEBURSTACCESSTIME, CSONTIME, CSRD/WROFFTIME, ADVONTIME, ADVRD/WROFFTIME, OEONTIME, OEOFFTIME, WEONTIME, WEOFFTIME, CYCLE2CYCLEDELAY, BUSTURNAROUND, TIMEOUTSTARTVALUE, WRDATAONADMUXBUS)

For no extra_delay:

- GPMC_CONFIG2_i Register : CSEXTRADELAY = 0h = CS i Timing control signal is not delayed
- GPMC_CONFIG4_i Register : WEEXTRADELAY = 0h = nWE timing control signal is not delayed
- GPMC_CONFIG4_i Register : OEEXTRADELAY = 0h = nOE timing control signal is not delayed
- GPMC_CONFIG3_i Register: ADVEXTRADELAY = 0h = nADV timing control signal is not delayed

Copyright © 2023 Texas Instruments Incorporated

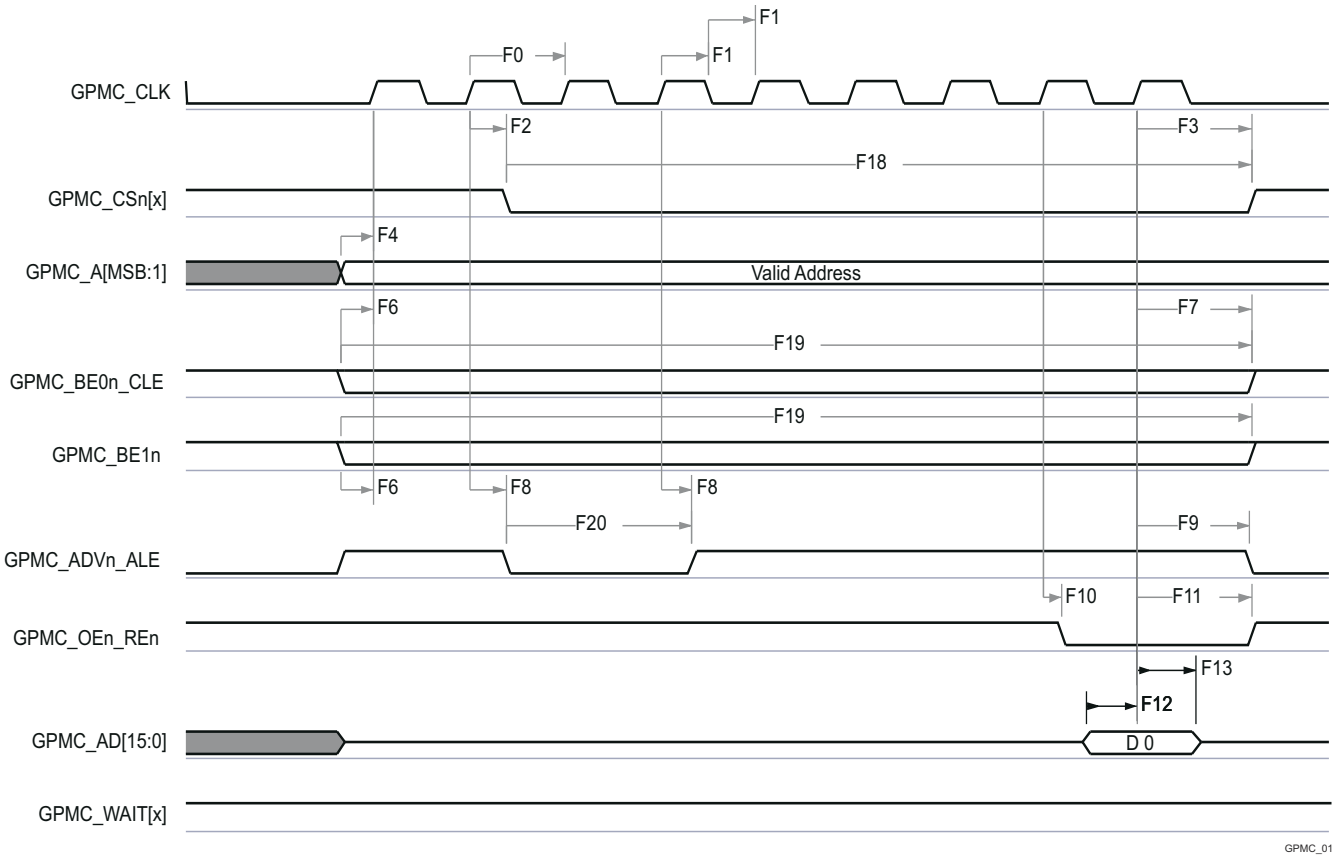

A. In GPMC_CSn[x], x is equal to 0, 1, 2 or 3.
B. In GPMC_WAIT[x], x is equal to 0 or 1.

Figure 6-48. GPMC and NOR Flash—Synchronous Single Read—(GpmcFCLKDivider = 0)

Copyright © 2023 Texas Instruments Incorporated

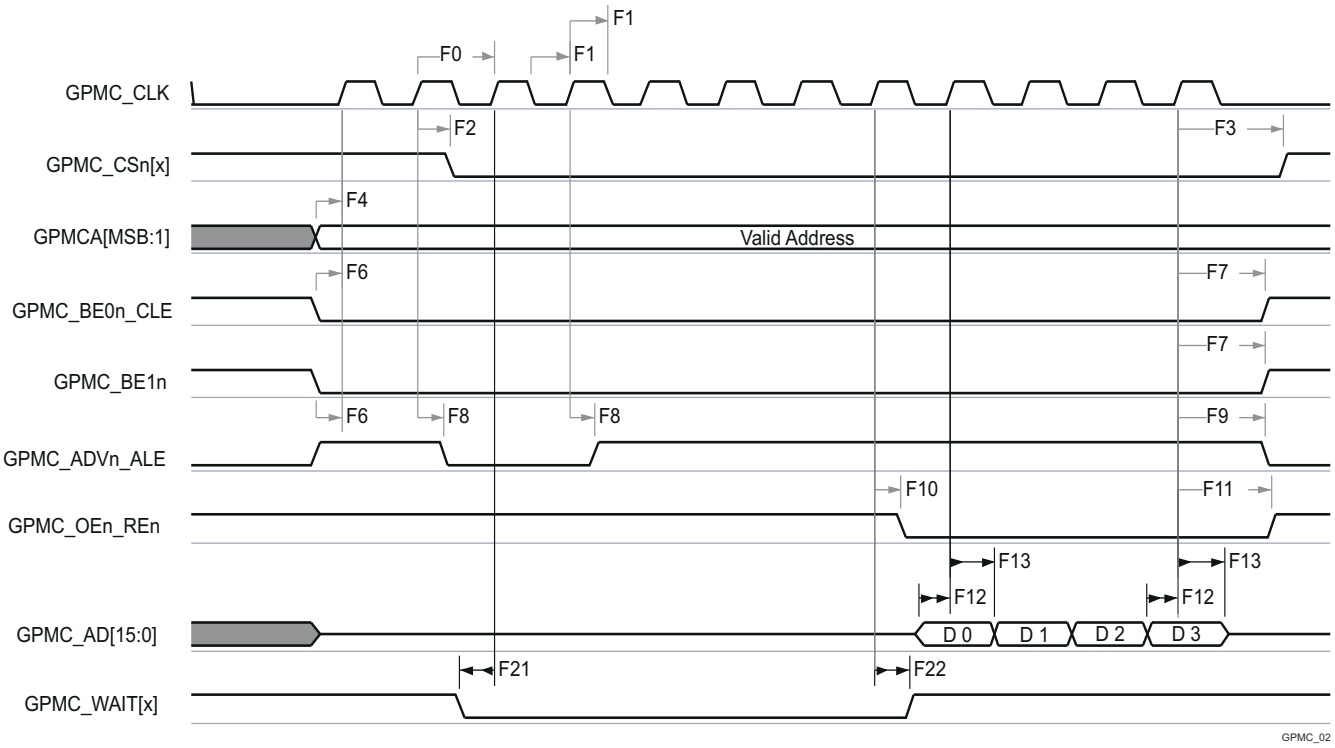

A. In GPMC_CSn[x], x is equal to 0, 1, 2 or 3.
B. In GPMC_WAIT[x], x is equal to 0 or 1.

Figure 6-49. GPMC and NOR Flash—Synchronous Burst Read—4x16-bit (GpmcFCLKDivider = 0)

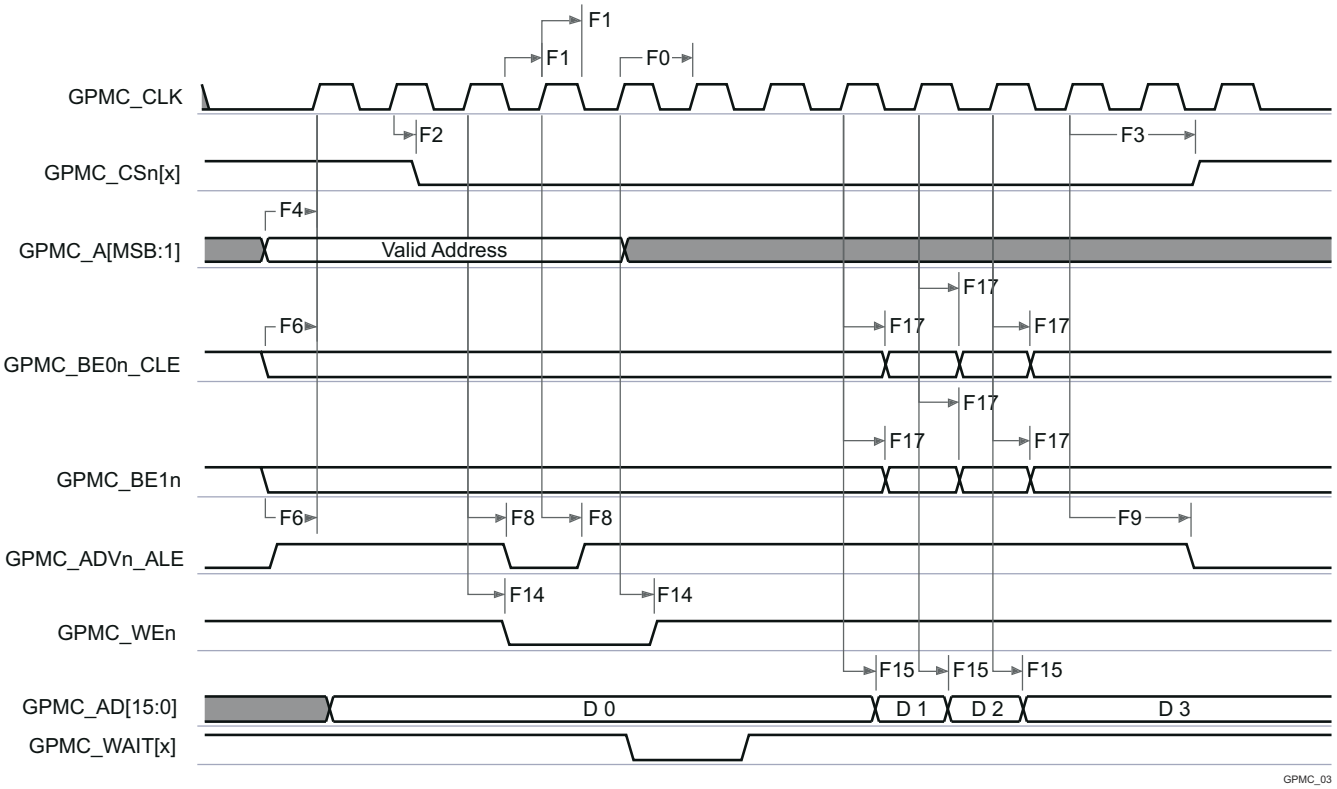

A. In GPMC_CSn[x], x is equal to 0, 1, 2 or 3.
B. In GPMC_WAIT[x], x is equal to 0 or 1.

Figure 6-50. GPMC and NOR Flash—Synchronous Burst Write—(GpmcFCLKDivider > 0)

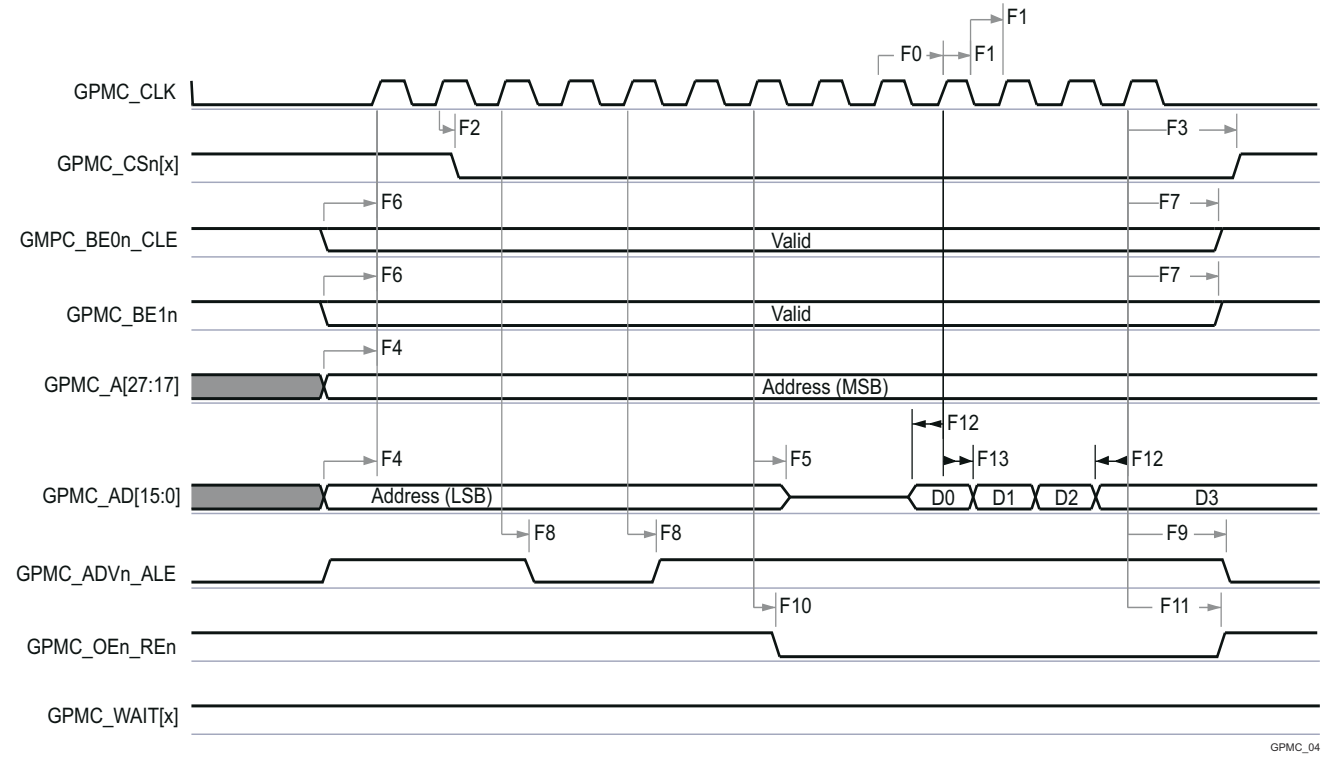

A. In GPMC_CSn[x], x is equal to 0, 1, 2 or 3.

Copyright © 2023 Texas Instruments Incorporated

B. In GPMC_WAIT[x], x is equal to 0 or 1.

Figure 6-51. GPMC and Multiplexed NOR Flash—Synchronous Burst Read

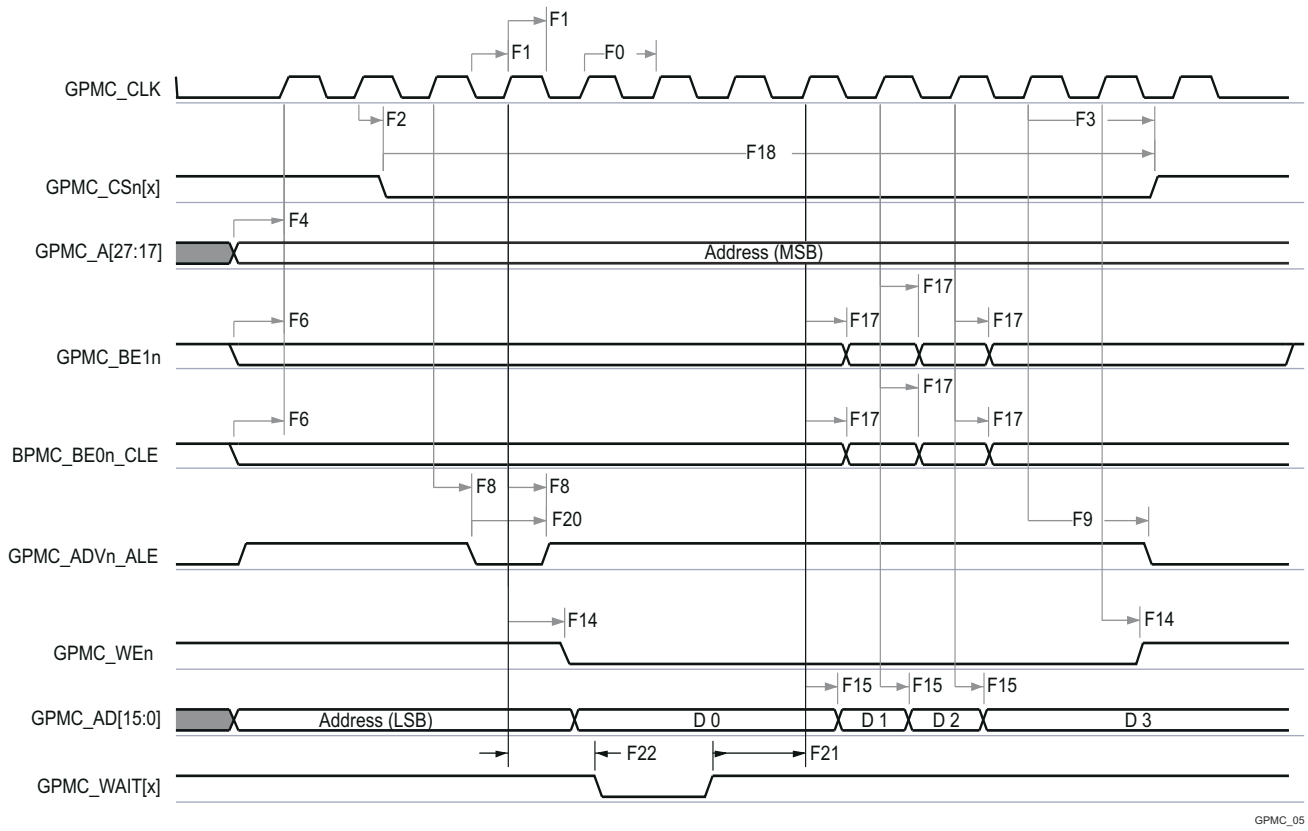

A. In GPMC_CSn[x], x is equal to 0, 1, 2 or 3.
B. In GPMC_WAIT[x], x is equal to 0 or 1.

Figure 6-52. GPMC and Multiplexed NOR Flash—Synchronous Burst Write

6.9.5.10.2 GPMC and NOR Flash—Asynchronous Mode

Section 6.9.5.10.2.1 and Section 6.9.5.10.2.2 assume testing over the recommended operating conditions and electrical characteristic conditions below (see Figure 6-53 through Figure 6-58).

6.9.5.10.2.1 GPMC and NOR Flash Timing Requirements—Asynchronous Mode

NO.	PARAMETER	DESCRIPTION	MODE	MIN	MAX	UNIT
FA5[1]	$t_{acc(d)}$	Data access time	div_by_1_mode; GPMC_FCLK_MUX_133; TIMEPARAGRANULARITY_X1		H [4]	ns
FA20[2]	$t_{acc1\text{-}pgmode(d)}$	Page mode successive data access time	div_by_1_mode; GPMC_FCLK_MUX_133; TIMEPARAGRANULARITY_X1		P [3]	ns
FA21[1]	$t_{acc2\text{-}pgmode(d)}$	Page mode first data access time	div_by_1_mode; GPMC_FCLK_MUX_133; TIMEPARAGRANULARITY_X1		H [4]	ns

(1) The FA5 parameter illustrates the amount of time required to internally sample input data. It is expressed in number of GPMC functional clock cycles. From start of read cycle and after FA5 functional clock cycles, input data is internally sampled by active functional clock edge. FA5 value must be stored inside the AccessTime register bit field.
(2) The FA20 prameter illustrates amount of time required to internally sample successive input page data. It is expressed in number of GPMC functional clock cycles. After each access to input page data, next input page data is internally sampled by active functional clock edge after FA20 functional clock cycles. The FA20 value must be stored in the PageBurstAccessTime register bit field.
(3) P = PageBurstAccessTime × (TimeParaGranularity + 1) × GPMC_FCLK[5]

Copyright © 2023 Texas Instruments Incorporated

(4) H = AccessTime × (TimeParaGranularity + 1) × GPMC_FCLK(5)
(5) GPMC_FCLK is general-purpose memory controller internal functional clock period in ns.

6.9.5.10.2.2 GPMC and NOR Flash Switching Characteristics—Asynchronous Mode

NO.	PARAMETER	DESCRIPTION	MODE(15)	MIN	MAX	UNIT
FA0	$t_{w(be[x]nV)}$	Pulse duration, output lower-byte enable and command latch enable GPMC_BE0n_CLE, output upper-byte enable GPMC_BE1n valid time	Read		0+N (12)	ns
			Write		0+N (12)	
FA1	$t_{w(csnV)}$	Pulse duration, output chip select GPMC_CSn[x] (13) low	Read		0+A (1)	ns
			Write		0+A (1)	
FA3	$t_{d(csnV-advnIV)}$	Delay time, output chip select GPMC_CSn[x](13) valid to output address valid and address latch enable GPMC_ADVn_ALE invalid	Read	-2+B (2)	2+B (2)	ns
			Write	-2+B (2)	2+B (2)	
FA4	$t_{d(csnV-oenIV)}$	Delay time, output chip select GPMC_CSn[x](13) valid to output enable GPMC_OEn_REn invalid (Single read)	div_by_1_mode; GPMC_FCLK_MUX_133; TIMEPARAGRANULARITY_X1	-2+C (3)	2+C (3)	ns
FA9	$t_{d(aV-csnV)}$	Delay time, output address GPMC_A[27:1] valid to output chip select GPMC_CSn[x](13) valid	div_by_1_mode; GPMC_FCLK_MUX_133; TIMEPARAGRANULARITY_X1	-2+J (9)	2+J (9)	ns
FA10	$t_{d(be[x]nV-csnV)}$	Delay time, output lower-byte enable and command latch enable GPMC_BE0n_CLE, output upper-byte enable GPMC_BE1n valid to output chip select GPMC_CSn[x](13) valid	div_by_1_mode; GPMC_FCLK_MUX_133; TIMEPARAGRANULARITY_X1	-2+J (9)	2+J (9)	ns
FA12	$t_{d(csnV-advnV)}$	Delay time, output chip select GPMC_CSn[x](13) valid to output address valid and address latch enable GPMC_ADVn_ALE valid	div_by_1_mode; GPMC_FCLK_MUX_133; TIMEPARAGRANULARITY_X1	-2+K (10)	2+K (10)	ns
FA13	$t_{d(csnV-oenV)}$	Delay time, output chip select GPMC_CSn[x](13) valid to output enable GPMC_OEn_REn valid	div_by_1_mode; GPMC_FCLK_MUX_133; TIMEPARAGRANULARITY_X1	-2+L (11)	2+L (11)	ns
FA16	$t_{w(aIV)}$	Pulse duration output address GPMC_A[26:1] invalid between 2 successive read and write accesses	div_by_1_mode; GPMC_FCLK_MUX_133; TIMEPARAGRANULARITY_X1	0+G (7)		ns
FA18	$t_{d(csnV-oenIV)}$	Delay time, output chip select GPMC_CSn[x](13) valid to output enable GPMC_OEn_REn invalid (Burst read)	div_by_1_mode; GPMC_FCLK_MUX_133; TIMEPARAGRANULARITY_X1	-2+I (8)	2+I (8)	ns
FA20	$t_{w(aV)}$	Pulse duration, output address GPMC_A[27:1] valid - 2nd, 3rd, and 4th accesses	div_by_1_mode; GPMC_FCLK_MUX_133; TIMEPARAGRANULARITY_X1	0+D (4)		ns
FA25	$t_{d(csnV-wenV)}$	Delay time, output chip select GPMC_CSn[x](13) valid to output write enable GPMC_WEn valid	div_by_1_mode; GPMC_FCLK_MUX_133; TIMEPARAGRANULARITY_X1	-2+E (5)	2+E (5)	ns
FA27	$t_{d(csnV-wenIV)}$	Delay time, output chip select GPMC_CSn[x](13) valid to output write enable GPMC_WEn invalid	div_by_1_mode; GPMC_FCLK_MUX_133; TIMEPARAGRANULARITY_X1	-2+F (6)	2+F (6)	ns
FA28	$t_{d(wenV-dV)}$	Delay time, output write enable GPMC_WEn valid to output data GPMC_AD[15:0] valid	div_by_1_mode; GPMC_FCLK_MUX_133; TIMEPARAGRANULARITY_X1		2.8	ns
FA29	$t_{d(dV-csnV)}$	Delay time, output data GPMC_AD[15:0] valid to output chip select GPMC_CSn[x](13) valid	div_by_1_mode; GPMC_FCLK_MUX_133; TIMEPARAGRANULARITY_X1	-2+J (9)	2+J (9)	ns
FA37	$t_{d(oenV-aIV)}$	Delay time, output enable GPMC_OEn_REn valid to output address GPMC_AD[15:0] phase end	div_by_1_mode; GPMC_FCLK_MUX_133; TIMEPARAGRANULARITY_X1		2.8	ns

(1) For single read: A = (CSRdOffTime - CSOnTime) × (TimeParaGranularity + 1) × GPMC_FCLK(14)
For single write: A = (CSWrOffTime - CSOnTime) × (TimeParaGranularity + 1) × GPMC_FCLK(14)
For burst read: A = (CSRdOffTime - CSOnTime + (n - 1) × PageBurstAccessTime) × (TimeParaGranularity + 1) × GPMC_FCLK(14)
For burst write: A = (CSWrOffTime - CSOnTime + (n - 1) × PageBurstAccessTime) × (TimeParaGranularity + 1) × GPMC_FCLK(14)
with n being the page burst access number

Copyright © 2023 Texas Instruments Incorporated

(2) For reading: B = ((ADVRdOffTime - CSOnTime) × (TimeParaGranularity + 1) + 0.5 × (ADVExtraDelay - CSExtraDelay)) × GPMC_FCLK[14]
For writing: B = ((ADVWrOffTime - CSOnTime) × (TimeParaGranularity + 1) + 0.5 × (ADVExtraDelay - CSExtraDelay)) × GPMC_FCLK[14]
(3) C = ((OEOffTime - CSOnTime) × (TimeParaGranularity + 1) + 0.5 × (OEExtraDelay - CSExtraDelay)) × GPMC_FCLK[14]
(4) D = PageBurstAccessTime × (TimeParaGranularity + 1) × GPMC_FCLK[14]
(5) E = ((WEOnTime - CSOnTime) × (TimeParaGranularity + 1) + 0.5 × (WEExtraDelay - CSExtraDelay)) × GPMC_FCLK[14]
(6) F = ((WEOffTime - CSOnTime) × (TimeParaGranularity + 1) + 0.5 × (WEExtraDelay - CSExtraDelay)) × GPMC_FCLK[14]
(7) G = Cycle2CycleDelay × GPMC_FCLK[14]
(8) I = ((OEOffTime + (n - 1) × PageBurstAccessTime - CSOnTime) × (TimeParaGranularity + 1) + 0.5 × (OEExtraDelay - CSExtraDelay)) × GPMC_FCLK[14]
(9) J = (CSOnTime × (TimeParaGranularity + 1) + 0.5 × CSExtraDelay) × GPMC_FCLK[14]
(10) K = ((ADVOnTime - CSOnTime) × (TimeParaGranularity + 1) + 0.5 × (ADVExtraDelay - CSExtraDelay)) × GPMC_FCLK[14]
(11) L = ((OEOnTime - CSOnTime) × (TimeParaGranularity + 1) + 0.5 × (OEExtraDelay - CSExtraDelay)) × GPMC_FCLK[14]
(12) For single read: N = RdCycleTime × (TimeParaGranularity + 1) × GPMC_FCLK[14]
For single write: N = WrCycleTime × (TimeParaGranularity + 1) × GPMC_FCLK[14]
For burst read: N = (RdCycleTime + (n - 1) × PageBurstAccessTime) × (TimeParaGranularity + 1) × GPMC_FCLK[14]
For burst write: N = (WrCycleTime + (n - 1) × PageBurstAccessTime) × (TimeParaGranularity + 1) × GPMC_FCLK[14]
(13) In GPMC_CSn[x], x is equal to 0, 1, 2 or 3.
(14) GPMC_FCLK is general-purpose memory controller internal functional clock period in ns.
(15) For div_by_1_mode:

- GPMC_CONFIG1_i Register: GPMCFCLKDIVIDER = 0h:
  - GPMC_CLK frequency = GPMC_FCLK frequency

For GPMC_FCLK_MUX_133:

- gpmc_fclk_sel[1:0] = 00 = CPSWHSDIV_CLKOUT3 = 2000/15 = 133.33 MHz

For TIMEPARAGRANULARITY_X1:

- GPMC_CONFIG1_i Register: TIMEPARAGRANULARITY = 0h = x1 latencies (affecting RD/WRCYCLETIME, RD/WRACCESSTIME, PAGEBURSTACCESSTIME, CSONTIME, CSRD/WROFFTIME, ADVONTIME, ADVRD/WROFFTIME, OEONTIME, OEOFFTIME, WEONTIME, WEOFFTIME, CYCLE2CYCLEDELAY, BUSTURNAROUND, TIMEOUTSTARTVALUE, WRDATAONADMUXBUS)

Copyright © 2023 Texas Instruments Incorporated

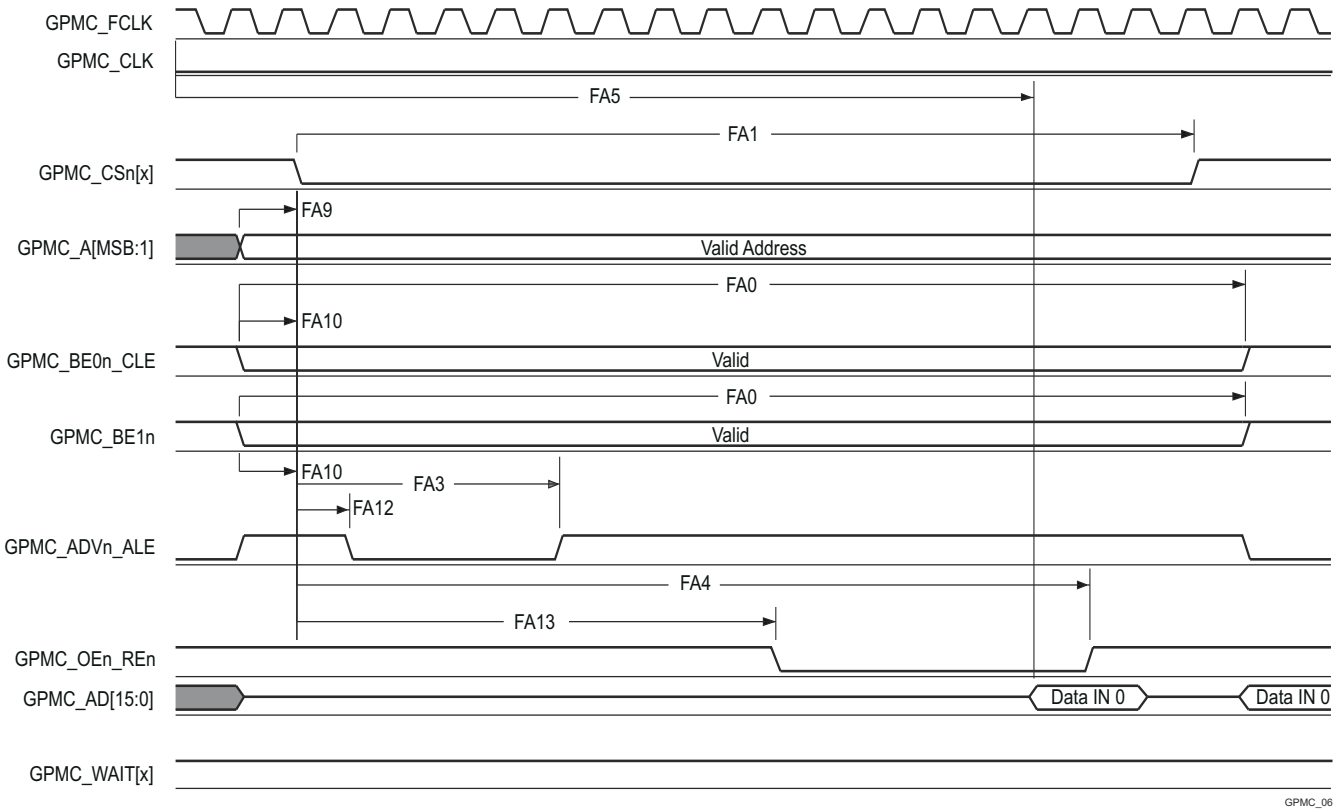

A. In GPMC_CSn[x], x is equal to 0, 1, 2 or 3. In GPMC_WAIT[x], x is equal to 0 or 1.
B. FA5 parameter illustrates amount of time required to internally sample input data. It is expressed in number of GPMC functional clock cycles. From start of read cycle and after FA5 functional clock cycles, input data will be internally sampled by active functional clock edge. FA5 value must be stored inside AccessTime register bits field.
C. GPMC_FCLK is an internal clock (GPMC functional clock) not provided externally.

Figure 6-53. GPMC and NOR Flash—Asynchronous Read—Single Word

Copyright © 2023 Texas Instruments Incorporated

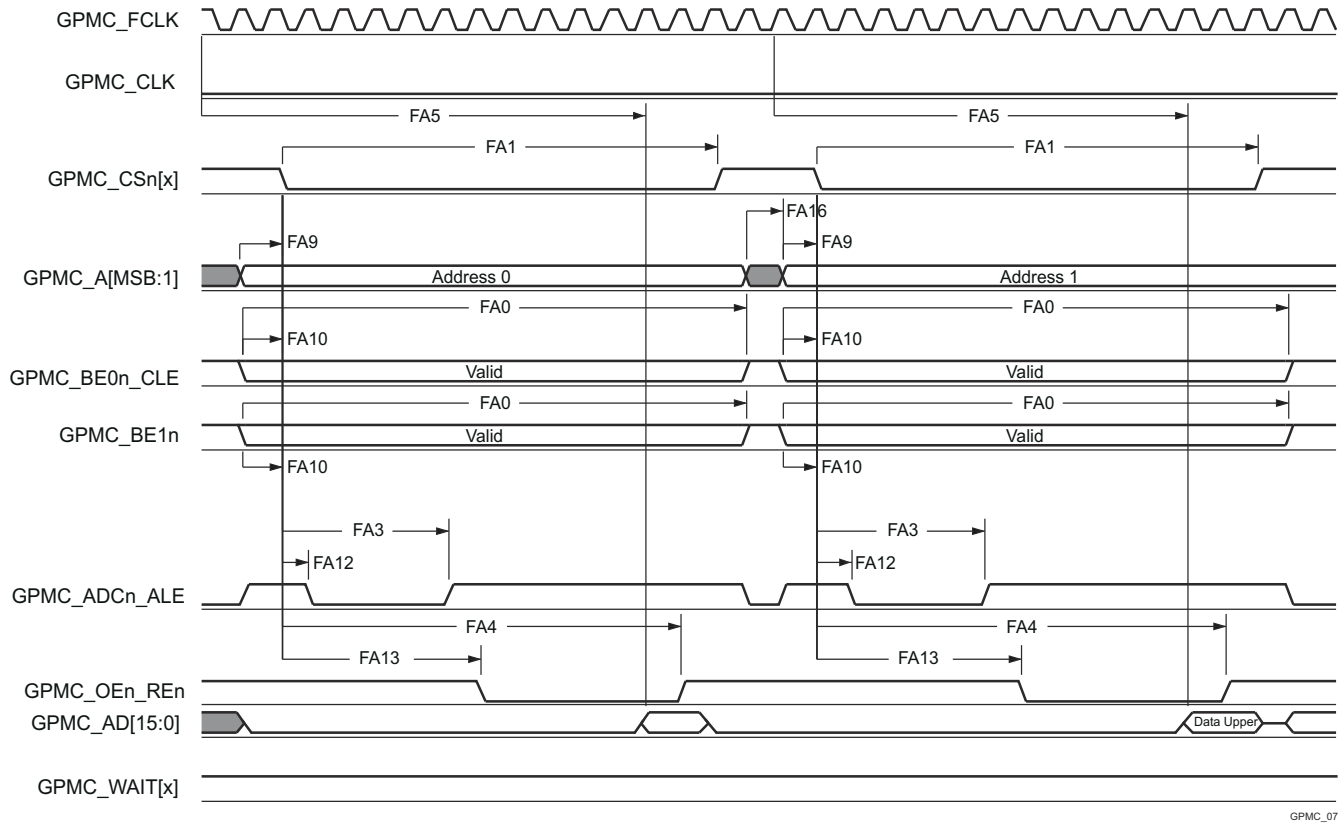

A. In GPMC_CSn[x], x is equal to 0, 1, 2 or 3. In GPMC_WAIT[x], x is equal to 0 or 1.
B. FA5 parameter illustrates amount of time required to internally sample input data. It is expressed in number of GPMC functional clock cycles. From start of read cycle and after FA5 functional clock cycles, input data will be internally sampled by active functional clock edge. FA5 value must be stored inside AccessTime register bits field.
C. GPMC_FCLK is an internal clock (GPMC functional clock) not provided externally.

Figure 6-54. GPMC and NOR Flash—Asynchronous Read—32-Bit

Copyright © 2023 Texas Instruments Incorporated

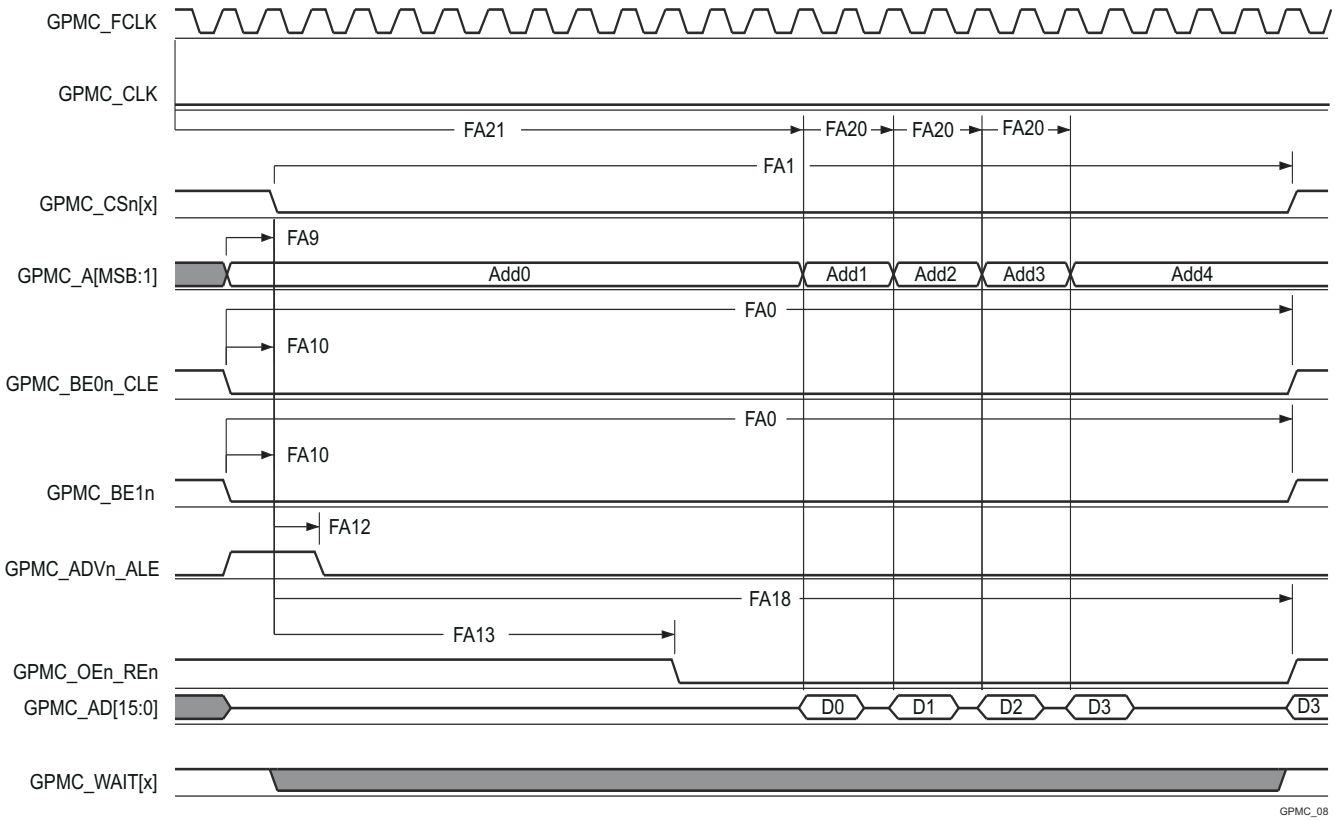

A. In GPMC_CSn[x], x is equal to 0, 1, 2 or 3. In GPMC_WAIT[x], x is equal to 0 or 1.
B. FA21 parameter illustrates amount of time required to internally sample first input page data. It is expressed in number of GPMC functional clock cycles. From start of read cycle and after FA21 functional clock cycles, first input page data will be internally sampled by active functional clock edge. FA21 calculation must be stored inside AccessTime register bits field.
C. FA20 parameter illustrates amount of time required to internally sample successive input page data. It is expressed in number of GPMC functional clock cycles. After each access to input page data, next input page data will be internally sampled by active functional clock edge after FA20 functional clock cycles. FA20 is also the duration of address phases for successive input page data (excluding first input page data). FA20 value must be stored in PageBurstAccessTime register bits field.
D. GPMC_FCLK is an internal clock (GPMC functional clock) not provided externally.

Figure 6-55. GPMC and NOR Flash—Asynchronous Read—Page Mode 4x16-Bit

Copyright © 2023 Texas Instruments Incorporated

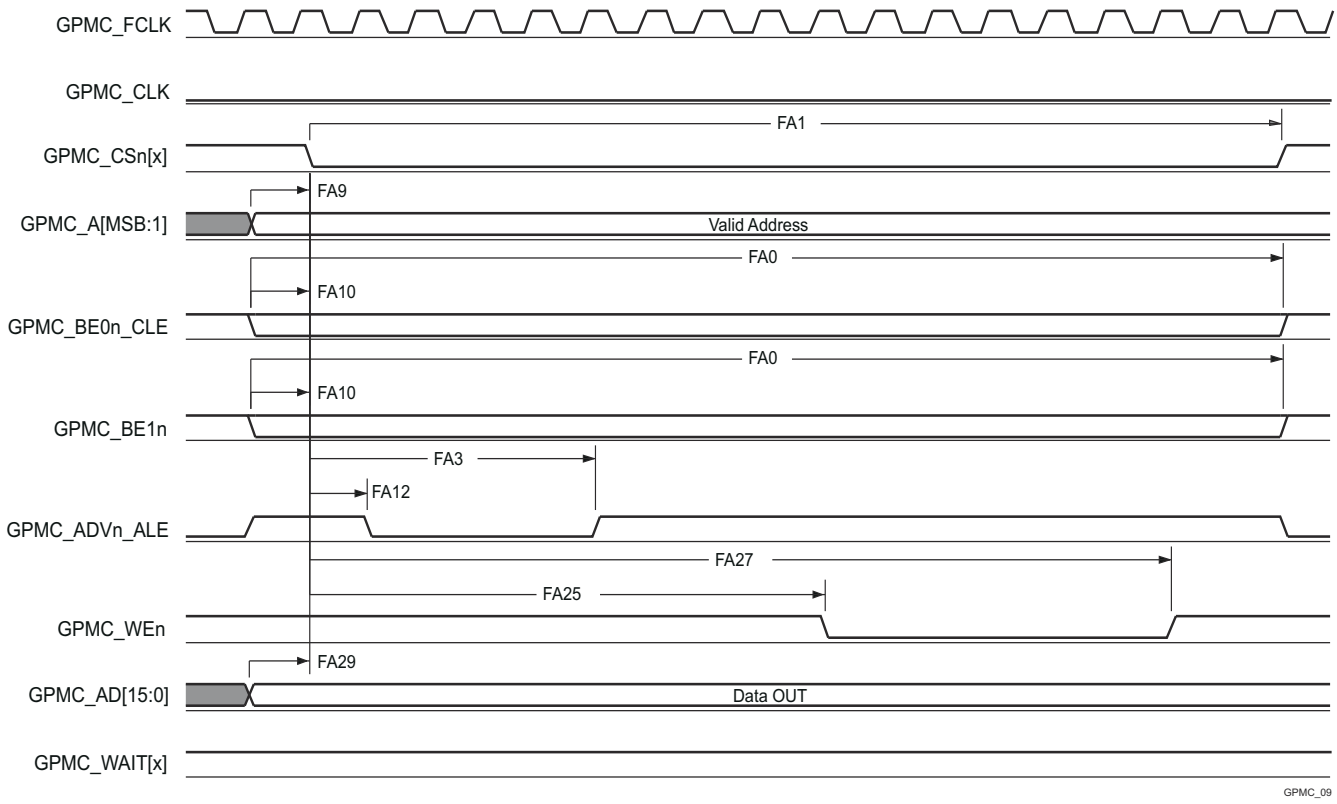

A. In GPMC_CSn[x], x is equal to 0, 1, 2 or 3. In GPMC_WAIT[x], x is equal to 0 or 1.

Figure 6-56. GPMC and NOR Flash—Asynchronous Write—Single Word

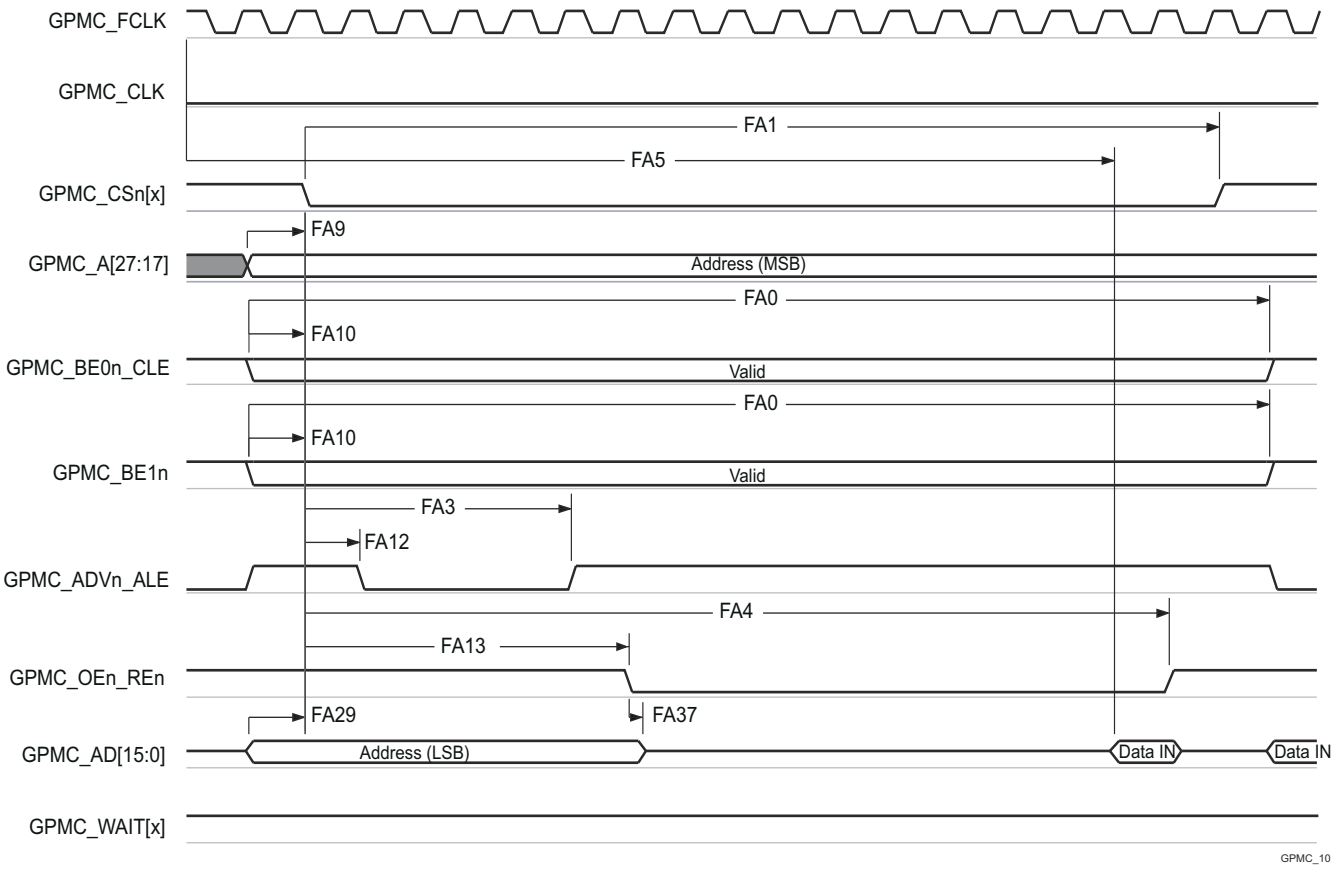

A. In GPMC_CSn[x], x is equal to 0, 1, 2 or 3. In GPMC_WAIT[x], x is equal to 0 or 1.
B. FA5 parameter illustrates amount of time required to internally sample input data. It is expressed in number of GPMC functional clock cycles. From start of read cycle and after FA5 functional clock cycles, input data will be internally sampled by active functional clock edge. FA5 value must be stored inside AccessTime register bits field.
C. GPMC_FCLK is an internal clock (GPMC functional clock) not provided externally.

Figure 6-57. GPMC and Multiplexed NOR Flash—Asynchronous Read—Single Word

Copyright © 2023 Texas Instruments Incorporated

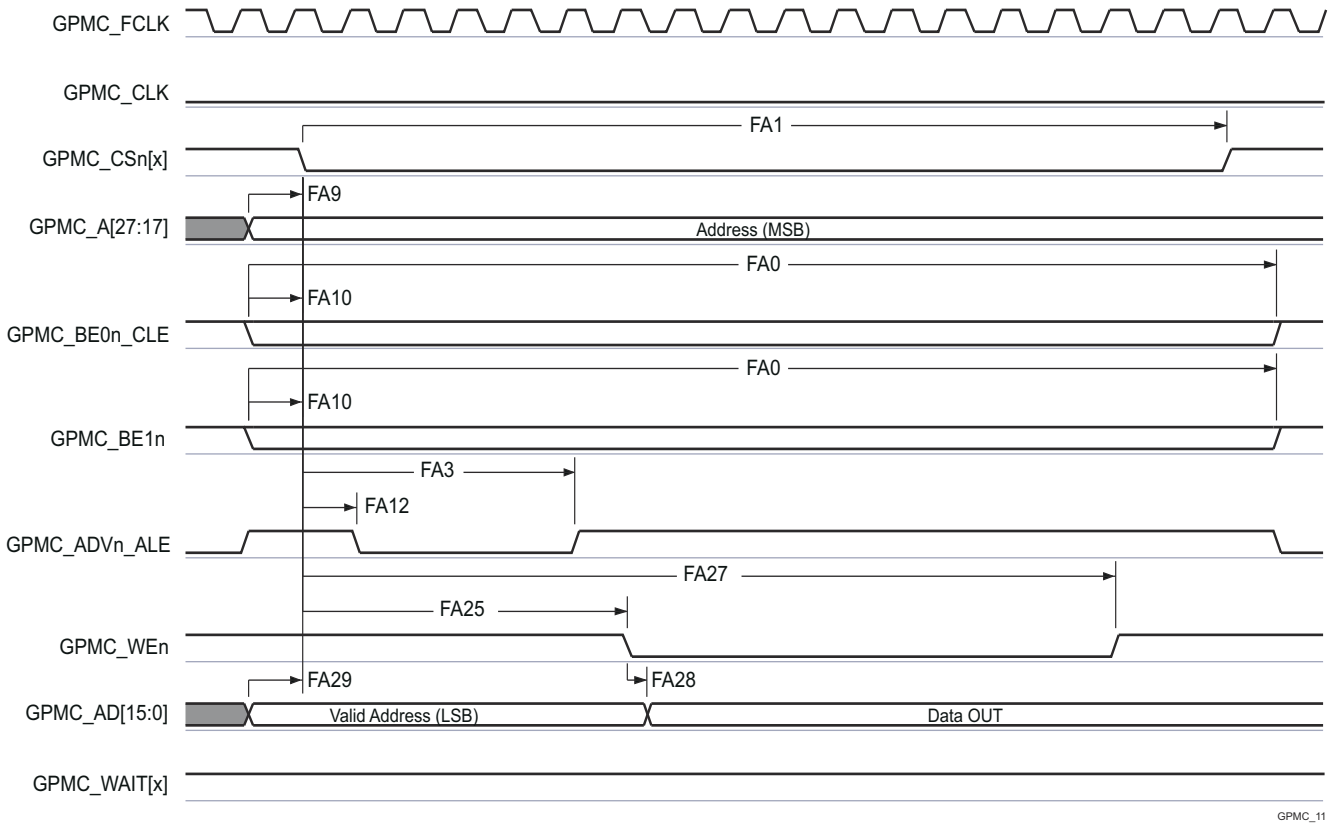

A. In GPMC_CSn[x], x is equal to 0, 1, 2 or 3. In GPMC_WAIT[x], x is equal to 0 or 1.

Figure 6-58. GPMC and Multiplexed NOR Flash—Asynchronous Write—Single Word

Copyright © 2023 Texas Instruments Incorporated

6.9.5.10.3 GPMC and NAND Flash—Asynchronous Mode

Section 6.9.5.10.3.1 and Section 6.9.5.10.3.2 assume testing over the recommended operating conditions and electrical characteristic conditions below (see Figure 6-59 through Figure 6-62).

6.9.5.10.3.1 GPMC and NAND Flash Timing Requirements—Asynchronous Mode

NO.	PARAMETER	DESCRIPTION	MODE[4]	MIN	MAX	UNIT
GNF12[1]	$t_{acc(d)}$	Access time, input data GPMC_AD[15:0] [3]	div_by_1_mode; GPMC_FCLK_MUX_133; TIMEPARAGRANULARITY_X1		J [2]	ns

(1) The GNF12 parameter illustrates the amount of time required to internally sample input data. It is expressed in number of GPMC functional clock cycles. From start of the read cycle and after GNF12 functional clock cycles, input data is internally sampled by the active functional clock edge. The GNF12 value must be stored inside AccessTime register bit field.
(2) J = AccessTime × (TimeParaGranularity + 1) × GPMC_FCLK[3]
(3) GPMC_FCLK is general-purpose memory controller internal functional clock period in ns.
(4) For div_by_1_mode:

- GPMC_CONFIG1_i Register: GPMCFCLKDIVIDER = 0h:
  - GPMC_CLK frequency = GPMC_FCLK frequency

For GPMC_FCLK_MUX_133:

- gpmc_fclk_sel[1:0] = 00 = CPSWHSDIV_CLKOUT3 = 2000/15 = 133.33 MHz

For TIMEPARAGRANULARITY_X1:

- GPMC_CONFIG1_i Register: TIMEPARAGRANULARITY = 0h = x1 latencies (affecting RD/WRCYCLETIME, RD/WRACCESSTIME, PAGEBURSTACCESSTIME, CSONTIME, CSRD/WROFFTIME, ADVONTIME, ADVRD/WROFFTIME, OEONTIME, OEOFFTIME, WEONTIME, WEOFFTIME, CYCLE2CYCLEDELAY, BUSTURNAROUND, TIMEOUTSTARTVALUE, WRDATAONADMUXBUS)

6.9.5.10.3.2 GPMC and NAND Flash Switching Characteristics—Asynchronous Mode

NO.	PARAMETER		MODE[15]	MIN	MAX	UNIT
	$t_{R(d)}$	Rise time, output data GPMC_AD[15:0]	div_by_1_mode; GPMC_FCLK_MUX_133; TIMEPARAGRANULARITY_X1		2	ns
	$t_{F(d)}$	Fall time, output data GPMC_AD[15:0]	div_by_1_mode; GPMC_FCLK_MUX_133; TIMEPARAGRANULARITY_X1		2	ns
GNF0	$t_{w(wenV)}$	Pulse duration, output write enable GPMC_WEn valid	div_by_1_mode; GPMC_FCLK_MUX_133; TIMEPARAGRANULARITY_X1	0+A [1]		ns
GNF1	$t_{d(csnV-wenV)}$	Delay time, output chip select GPMC_CSn[x][13] valid to output write enable GPMC_WEn valid	div_by_1_mode; GPMC_FCLK_MUX_133; TIMEPARAGRANULARITY_X1	-2+B [2]	2+B [2]	ns
GNF2	$t_{w(cleH-wenV)}$	Delay time, output lower-byte enable and command latch enable GPMC_BE0n_CLE high to output write enable GPMC_WEn valid	div_by_1_mode; GPMC_FCLK_MUX_133; TIMEPARAGRANULARITY_X1	-2+C [3]	2+C [3]	ns
GNF3	$t_{w(wenV-dV)}$	Delay time, output data GPMC_AD[15:0] valid to output write enable GPMC_WEn valid	div_by_1_mode; GPMC_FCLK_MUX_133; TIMEPARAGRANULARITY_X1	-2+D [4]	2.8+D [4]	ns
GNF4	$t_{w(wenIV-dIV)}$	Delay time, output write enable GPMC_WEn invalid to output data GPMC_AD[15:0] invalid	div_by_1_mode; GPMC_FCLK_MUX_133; TIMEPARAGRANULARITY_X1	-2+E [5]	2.8+E [5]	ns
GNF5	$t_{w(wenIV-cleIV)}$	Delay time, output write enable GPMC_WEn invalid to output lower-byte enable and command latch enable GPMC_BE0n_CLE invalid	div_by_1_mode; GPMC_FCLK_MUX_133; TIMEPARAGRANULARITY_X1	-2+F [6]	2+F [6]	ns
GNF6	$t_{w(wenIV-csnIV)}$	Delay time, output write enable GPMC_WEn invalid to output chip select GPMC_CSn[x][13] invalid	div_by_1_mode; GPMC_FCLK_MUX_133; TIMEPARAGRANULARITY_X1	-2+G [7]	2+G [7]	ns

Copyright © 2023 Texas Instruments Incorporated

NO.	PARAMETER		MODE(15)	MIN	MAX	UNIT
GNF7	$t_{w(aleH-wenV)}$	Delay time, output address valid and address latch enable GPMC_ADVn_ALE high to output write enable GPMC_WEn valid	div_by_1_mode; GPMC_FCLK_MUX_133; TIMEPARAGRANULARITY_X1	-2+C (3)	2+C (3)	ns
GNF8	$t_{w(wenIV-aleIV)}$	Delay time, output write enable GPMC_WEn invalid to output address valid and address latch enable GPMC_ADVn_ALE invalid	div_by_1_mode; GPMC_FCLK_MUX_133; TIMEPARAGRANULARITY_X1	-2+F (6)	2+F (6)	ns
GNF9	$t_{c(wen)}$	Cycle time, write	div_by_1_mode; GPMC_FCLK_MUX_133; TIMEPARAGRANULARITY_X1		0+H (8)	ns
GNF10	$t_{d(csnV-oenV)}$	Delay time, output chip select GPMC_CSn[x](13) valid to output enable GPMC_OEn_REn valid	div_by_1_mode; GPMC_FCLK_MUX_133; TIMEPARAGRANULARITY_X1	-2+I (9)	2+I (9)	ns
GNF13	$t_{w(oenV)}$	Pulse duration, output enable GPMC_OEn_REn valid	div_by_1_mode; GPMC_FCLK_MUX_133; TIMEPARAGRANULARITY_X1		0+K (10)	ns
GNF14	$t_{c(oen)}$	Cycle time, read	div_by_1_mode; GPMC_FCLK_MUX_133; TIMEPARAGRANULARITY_X1	0+L (11)		ns
GNF15	$t_{w(oenIV-csnIV)}$	Delay time, output enable GPMC_OEn_REn invalid to output chip select GPMC_CSn[x](13) invalid	div_by_1_mode; GPMC_FCLK_MUX_133; TIMEPARAGRANULARITY_X1	-2+M (12)	2+M (12)	ns

(1) A = (WEOffTime - WEOnTime) × (TimeParaGranularity + 1) × GPMC_FCLK(14)
(2) B = ((WEOnTime - CSOnTime) × (TimeParaGranularity + 1) + 0.5 × (WEExtraDelay - CSExtraDelay)) × GPMC_FCLK(14)
(3) C = ((WEOnTime - ADVOnTime) × (TimeParaGranularity + 1) + 0.5 × (WEExtraDelay - ADVExtraDelay)) × GPMC_FCLK(14)
(4) D = (WEOnTime × (TimeParaGranularity + 1) + 0.5 × WEExtraDelay) × GPMC_FCLK(14)
(5) E = ((WrCycleTime - WEOffTime) × (TimeParaGranularity + 1) - 0.5 × WEExtraDelay) × GPMC_FCLK(14)
(6) F = ((ADVWrOffTime - WEOffTime) × (TimeParaGranularity + 1) + 0.5 × (ADVExtraDelay - WEExtraDelay)) × GPMC_FCLK(14)
(7) G = ((CSWrOffTime - WEOffTime) × (TimeParaGranularity + 1) + 0.5 × (CSExtraDelay - WEExtraDelay)) × GPMC_FCLK(14)
(8) H = WrCycleTime × (1 + TimeParaGranularity) × GPMC_FCLK(14)
(9) I = ((OEOnTime - CSOnTime) × (TimeParaGranularity + 1) + 0.5 × (OEExtraDelay - CSExtraDelay)) × GPMC_FCLK(14)
(10) K = (OEOffTime - OEOnTime) × (1 + TimeParaGranularity) × GPMC_FCLK(14)
(11) L = RdCycleTime × (1 + TimeParaGranularity) × GPMC_FCLK(14)
(12) M = ((CSRdOffTime - OEOffTime) × (TimeParaGranularity + 1) + 0.5 × (CSExtraDelay - OEExtraDelay)) × GPMC_FCLK(14)
(13) In GPMC_CSn[x], x is equal to 0, 1, 2 or 3.
(14) GPMC_FCLK is general-purpose memory controller internal functional clock period in ns.
(15) For div_by_1_mode:

- GPMC_CONFIG1_i Register: GPMCFCLKDIVIDER = 0h:
  - GPMC_CLK frequency = GPMC_FCLK frequency

For GPMC_FCLK_MUX_133:

- gpmc_fclk_sel[1:0] = 00 = CPSWHSDIV_CLKOUT3 = 2000/15 = 133.33 MHz

For TIMEPARAGRANULARITY_X1:

- GPMC_CONFIG1_i Register: TIMEPARAGRANULARITY = 0h = x1 latencies (affecting RD/WRCYCLETIME, RD/WRACCESSTIME, PAGEBURSTACCESSTIME, CSONTIME, CSRD/WROFFTIME, ADVONTIME, ADVRD/WROFFTIME, OEONTIME, OEOFFTIME, WEONTIME, WEOFFTIME, CYCLE2CYCLEDELAY, BUSTURNAROUND, TIMEOUTSTARTVALUE, WRDATAONADMUXBUS)

Copyright © 2023 Texas Instruments Incorporated

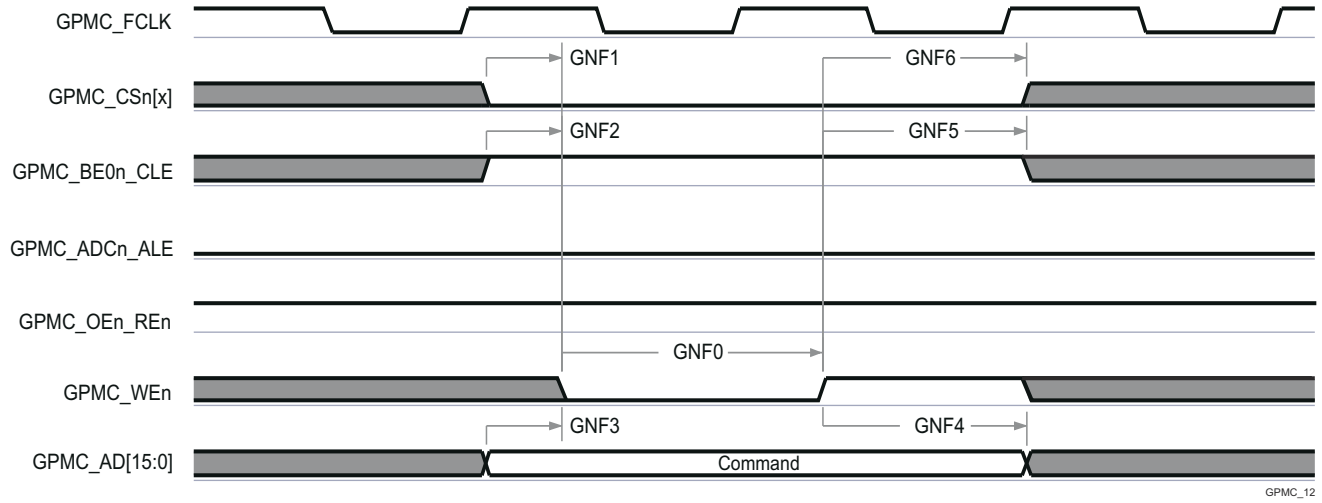

A. In GPMC_CSn[x], x is equal to 0, 1, 2 or 3.

Figure 6-59. GPMC and NAND Flash—Command Latch Cycle

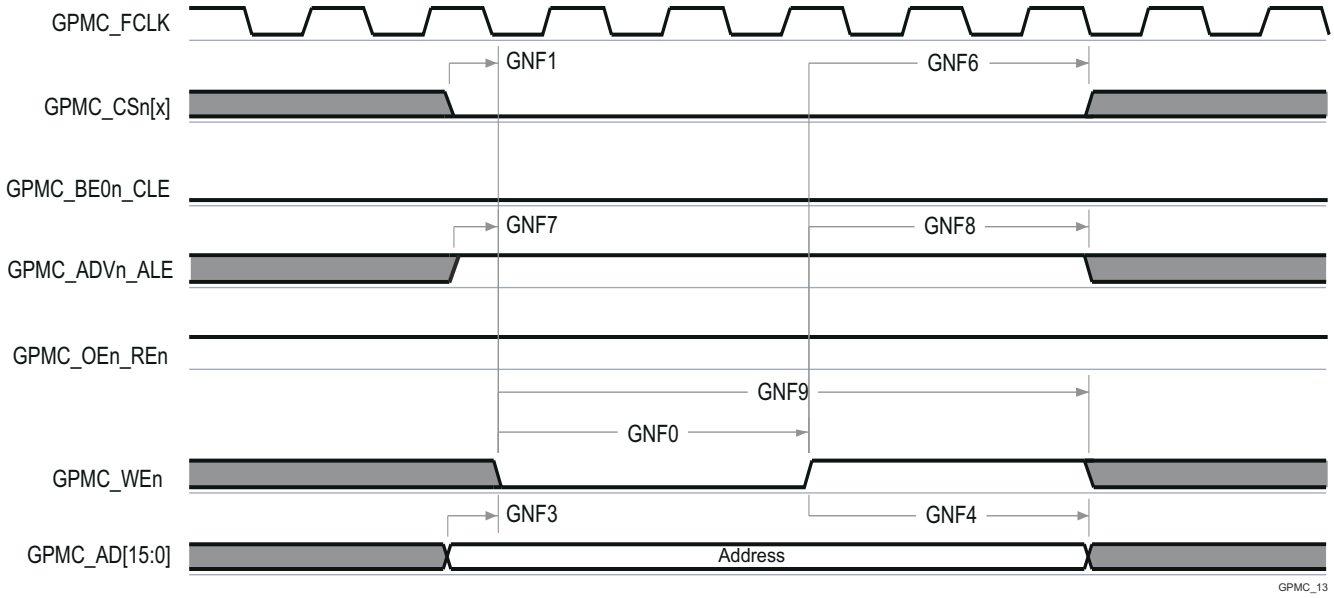

A. In GPMC_CSn[x], x is equal to 0, 1, 2 or 3.

Figure 6-60. GPMC and NAND Flash—Address Latch Cycle

Copyright © 2023 Texas Instruments Incorporated

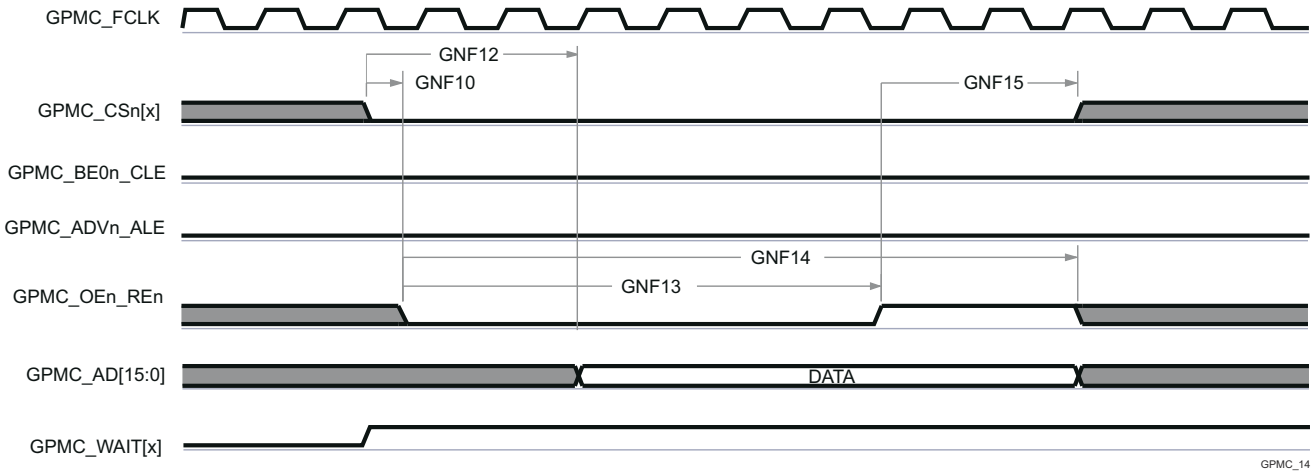

A. GNF12 parameter illustrates amount of time required to internally sample input data. It is expressed in number of GPMC functional clock cycles. From start of read cycle and after GNF12 functional clock cycles, input data will be internally sampled by active functional clock edge. GNF12 value must be stored inside AccessTime register bits field.
B. GPMC_FCLK is an internal clock (GPMC functional clock) not provided externally.
C. In GPMC_CSn[x], x is equal to 0, 1, 2 or 3. In GPMC_WAIT[x], x is equal to 0 or 1.

Figure 6-61. GPMC and NAND Flash—Data Read Cycle

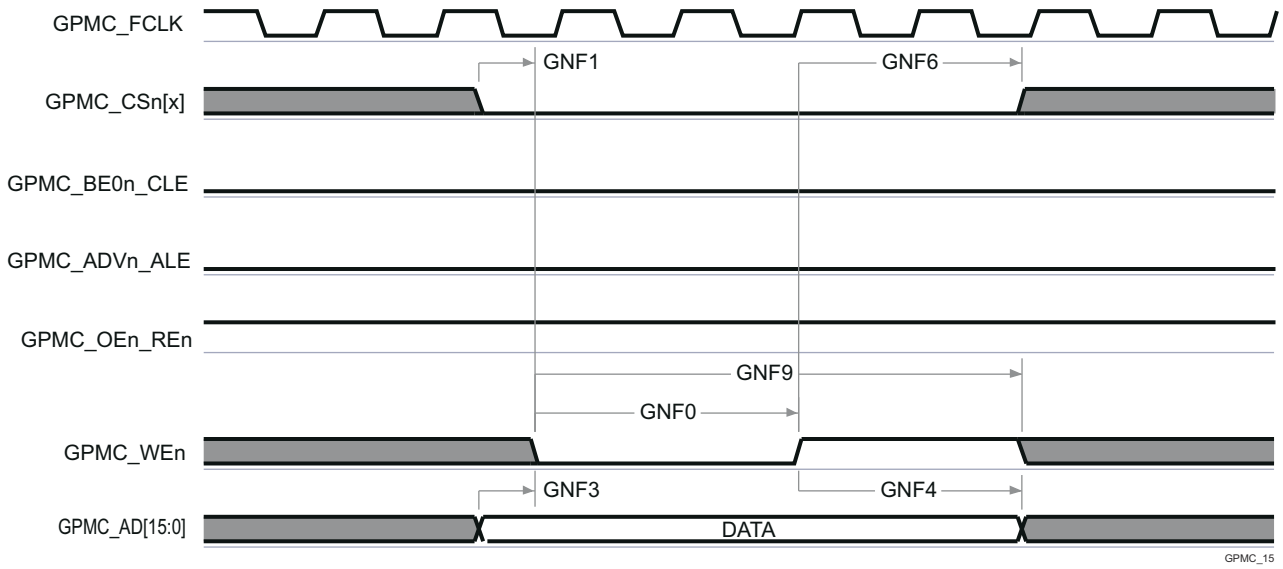

A. In GPMC_CSn[x], x is equal to 0, 1, 2 or 3.

Figure 6-62. GPMC and NAND Flash—Data Write Cycle

For more information, see section *General-Purpose Memory Controller (GPMC)* in the device TRM.

6.9.5.11 HyperBus

Note

HyperBus is not available on this device.

For more details about features and additional description information on the device Hyperbus, see the corresponding sections within Section 5.3, *Signal Descriptions* and Section 7, *Detailed Description*.

Section 6.9.5.11.1, Section 6.9.5.11.2, and Section 6.9.5.11.3 assume testing over the recommended operating conditions and electrical characteristic conditions (see Figure 6-63, Figure 6-64, and Figure 6-65).

Copyright © 2023 Texas Instruments Incorporated

Table 6-40 presents timing conditions for HyperBus.

Table 6-40. HyperBus Timing Conditions

PARAMETER	DESCRIPTION		MIN	MAX	UNIT
INPUT CONDITIONS					
SR_I	Input slew rate		2	5	V/ns
OUTPUT CONDITIONS					
C_L	Output load capacitance		1.5	10	pF
PCB CONNECTIVITY REQUIREMENTS					
$t_{d(Trace\ Mismatch\ Delay)}$	Propagation delay mismatch between traces	CK and CKn; RWDS and DQ[7:0]		10	ps
		CK/CKn and RWDS; CK/CKn and CSn		260	ps
		CK/CKn and DQ[7:0]		80	ps
		RESETn and CSn[1:0]		340	ps

6.9.5.11.1 Timing Requirements for HyperBus Initialization

NO.	PARAMETER	DESCRIPTION	MODE	MIN	MAX	UNIT
D1	$t_{w(RESETn)}$	RESETn Pulse Width		200		ns
D2	$t_{w(csnL)}$	Chip Select Pulse Width			1000	ns
D3	$t_{d(RESETnH-csnL)}$	Delay time, RESETn inactive to CSn active		200.34		ns
D4	$t_{d(csnL-RWDSL)}$	Delay time, CSn active to RWDS falling	166 MHz		186	ns
			100 MHz		182	ns
D5	$t_{skn(rwdsX-dV)}$	Input skew, RWDS transitioning to D0:D7 valid	166 MHz	-0.46	0.46	ns
LFD5			100 MHz	-0.81	0.81	ns

6.9.5.11.2 HyperBus 166 MHz Switching Characteristics

NO.	PARAMETER	DESCRIPTION	MIN	MAX	UNIT
D6	$t_{c(clk/clkn)}$	CLK period, CLK/CLKn	6		ns
D7	$t_{w(clk/clkn)}$	Pulse width, CLK/CLKn	2.7		ns
D8	$t_{w(csIV)}$	Pulse width, CS0 invalid between operations	6		ns
D9	$t_{d(clkH-csL)}$	Delay time, CS0 active to CLK rising/ CLKn falling		-3.34	ns
D10	$t_{d(clkL[LE]-csH)}$	Delay time, last falling CLK/ rising CLKn edge to CS0 inactive	0.34		ns
D11	$t_{d(clkX-rwdsV)}$	Delay time, CLK transition to RWDS valid	0.94	2.08	ns
D12	$t_{d(clkX-d[0:7]V)}$	Delay time, CLK transitioning to D0:7 valid	0.76	2.26	ns

6.9.5.11.3 HyperBus 100 MHz Switching Characteristics

NO.	PARAMETER	DESCRIPTION	MIN	MAX	UNIT
LFD6	$t_{c(clk)}$	CLK period, CLK	10		ns
LFD7	$t_{w(clk)}$	Pulse width, CLK	4.5		ns
LFD8	$t_{w(csIV)}$	Pulse width, CS0 invalid between operations	10		ns
LFD9	$t_{d(clkH-csL)}$	Delay time, CS0 active to CLK rising		-3.39	ns
LFD10	$t_{d(clkL[LE]-csH)}$	Delay time, last falling CLK edge to CS0 inactive	0.39		ns
LFD11	$t_{d(clkX-rwdsV)}$	Delay time, CLK transition to RWDS valid	1.39	3.62	ns
LFD12	$t_{d(clkX-d[0:7]V)}$	Delay time, CLK transitioning to D0:7 valid	1.21	3.8	ns

Copyright © 2023 Texas Instruments Incorporated

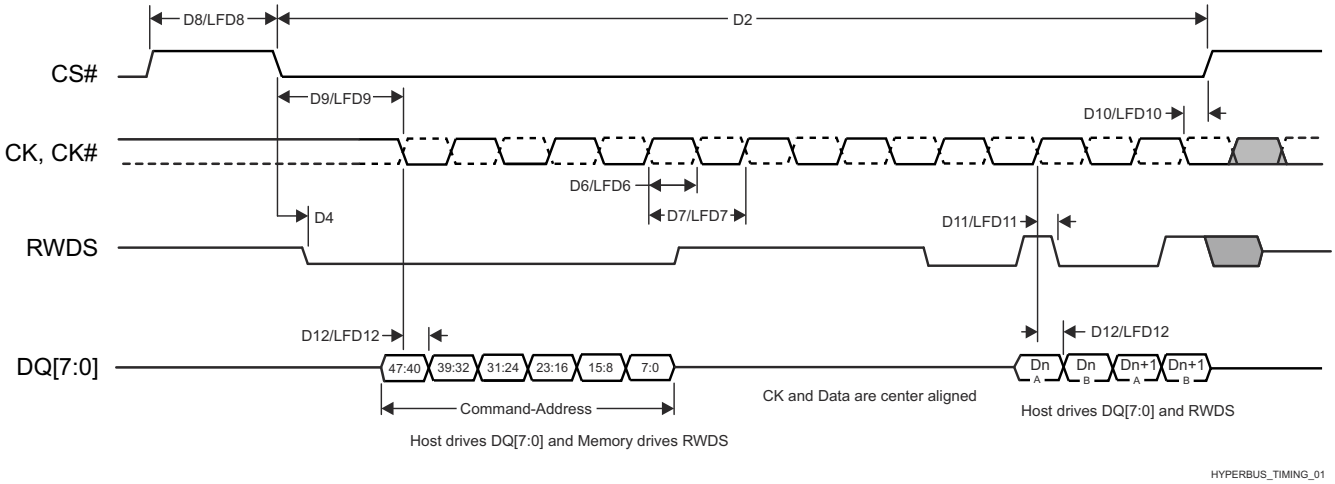

Figure 6-63. HyperBus Timing Diagrams - Transmitter Mode

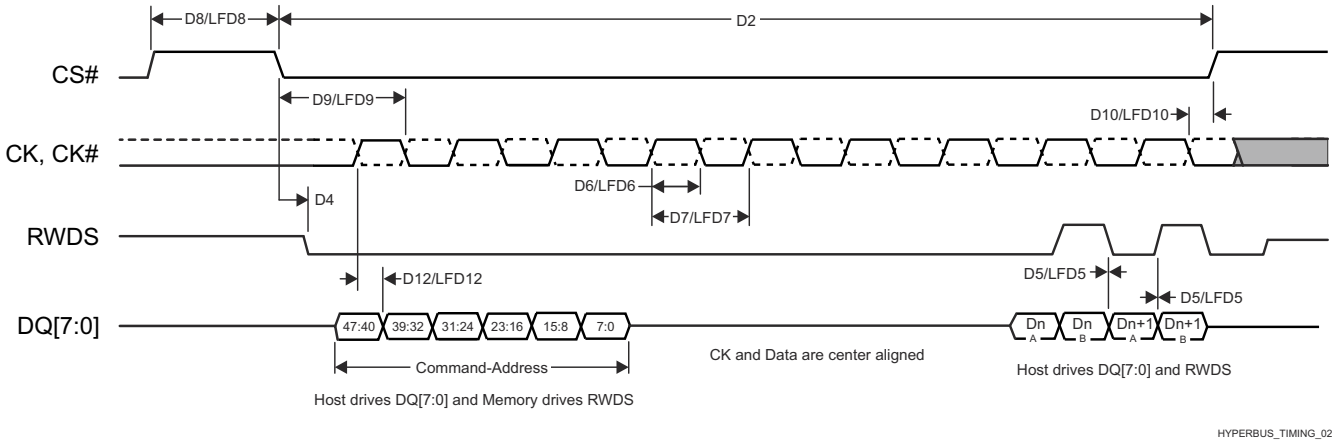

Figure 6-64. HyperBus Timing Diagrams - Receiver Mode

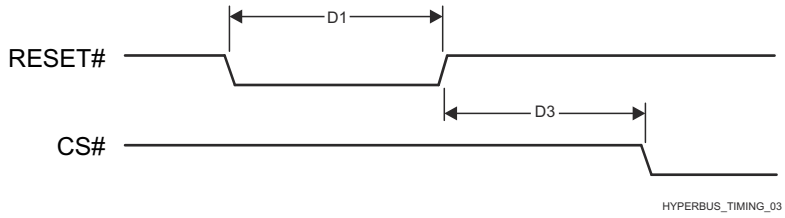

Figure 6-65. HyperBus Timing Diagrams - Reset

For more information, see section *HyperBus Interface* in the device TRM.

6.9.5.12 I2C

The device includes 6 inter-integrated circuit (I2C) modules which provide an interface to other devices compliant with the Philips Semiconductors Inter-IC bus (I2C BUS™) specification version 2.1.

Note

HS-mode is only supported on MAIN_I2C[0:3]. HS-mode is not supported on MCU_I2C0 and WKUP_I2C0.

Copyright © 2023 Texas Instruments Incorporated

Note

Philips I2C specification rise/fall timings apply only to MCU_I2C0 and WKUP_I2C0. MAIN_I2C[0:3] use standard LVCMOS buffers to emulate open-drain buffers, and their rise/fall times should be referenced using the device IBIS model.

Note

I2C pins SDA and SCL do not feature fail-safe I/O buffers. These pins could potentially draw current when the device is powered down.

For more details about features and additional description information on the device Inter-Integrated Circuit, see the corresponding sections within Section 5.3, *Signal Descriptions* and Section 7, *Detailed Description*.

6.9.5.13 MCAN

For more details about features and additional description information on the device Controller Area Network Interface, see the corresponding sections within Section 5.3, *Signal Descriptions* and Section 7, *Detailed Description*.

Table 6-41 presents timing conditions for MCANi interface. Table 6-42 presents timing parameters for MCANi Interface.

Table 6-41. MCAN Timing Conditions

PARAMETER		MIN	MAX	UNIT
INPUT CONDITIONS				
SR_I	Input slew rate	2	15	V/ns
OUTPUT CONDITIONS				
C_L	Output load capacitance	5	20	pF

Table 6-42. MCAN Register to Pin Timings

NO.	PARAMETER	DESCRIPTION	MIN	MAX	UNIT
M1	$t_{p(MCANi_TX)}$	Delay Time Max, Transmit Shift Register to MCANi_TX pin		15	ns
M2	$t_{p(MCANi_RX)}$	Delay Time Max, MCANi_RX pin to receive shift register		15	ns

For more information, see section *Controller Area Network (MCAN)* in the device TRM.

6.9.5.14 MCASP

For more details about features and additional description information on the device Multichannel Audio Serial Port, see the corresponding sections within Section 5.3, *Signal Descriptions* and Section 7, *Detailed Description*.

Table 6-43 presents timing conditions for MCASP0 to MCASP2.

Section 6.9.5.14.1 present timing requirements and switching characteristics for MCASP0 to MCASP2.

Table 6-43. MCASP Timing Conditions

PARAMETER		MIN	MAX	UNIT
INPUT CONDITIONS				
SR_I	Input slew rate	0.7	5	V/ns
OUTPUT CONDITIONS				
C_L	Output load capacitance	1	10	pF
PCB CONNECTIVITY REQUIREMENTS				
$t_{d(Trace\ Delay)}$	Propagation delay of each trace	140	1080	ps
$t_{d(Trace\ Mismatch\ Delay)}$	Propagation delay mismatch across all traces		100	ps

Copyright © 2023 Texas Instruments Incorporated

6.9.5.14.1 MCASP Timing Requirements and Switching Characteristics

Table 6-44. MCASP Timing Requirements

NO.	PARAMETER	DESCRIPTION(1)	Mode	MIN	MAX	UNIT
ASP1	$t_{c(AHCLKRX)}$	Cycle time, AHCLKR/X		15.25		ns
ASP2	$t_{w(AHCLKRX)}$	Pulse duration, AHCLKR/X high or low		0.5P - 2.5(2)		ns
ASP3	$t_{c(ACLKRX)}$	Cycle time, ACLKR/X		15.25		ns
ASP4	$t_{w(ACLKRX)}$	Pulse duration, ACLKR/X high or low		0.5R - 2.5(3)		ns
ASP5	$t_{su(AFSRX-ACLKRX)}$	Setup time, AFSR/X input valid before ACLKR/X	ACLKR/X int	10.995		ns
			ACLKR/X ext in/out	4		
ASP6	$t_{h(ACLKRX-AFSRX)}$	Hold time, AFSR/X input valid after ACLKR/X	ACLKR/X int	-1		ns
			ACLKR/X ext in/out	1.6		
ASP7	$t_{su(AXR-ACLKRX)}$	Setup time, AXR input valid before ACLKR/X	ACLKR/X int	10.995		ns
			ACLKR/X ext in/out	4		
ASP8	$t_{h(ACLKRX-AXR)}$	Hold time, AXR input valid after ACLKR/X	ACLKR/X int	-1		ns
			ACLKR/X ext in/out	1.6		

(1) ACLKR internal: ACLKRCTL.CLKRM=1, PDIR.ACLKR = 1
ACLKR external input: ACLKRCTL.CLKRM=0, PDIR.ACLKR=0
ACLKR external output: ACLKRCTL.CLKRM=0, PDIR.ACLKR=1
ACLKX internal: ACLKXCTL.CLKXM=1, PDIR.ACLKX = 1
ACLKX external input: ACLKXCTL.CLKXM=0, PDIR.ACLKX=0
ACLKX external output: ACLKXCTL.CLKXM=0, PDIR.ACLKX=1
(2) P = AHCLKR/X period in ns.
(3) R = ACLKR/X period in ns.

Copyright © 2023 Texas Instruments Incorporated

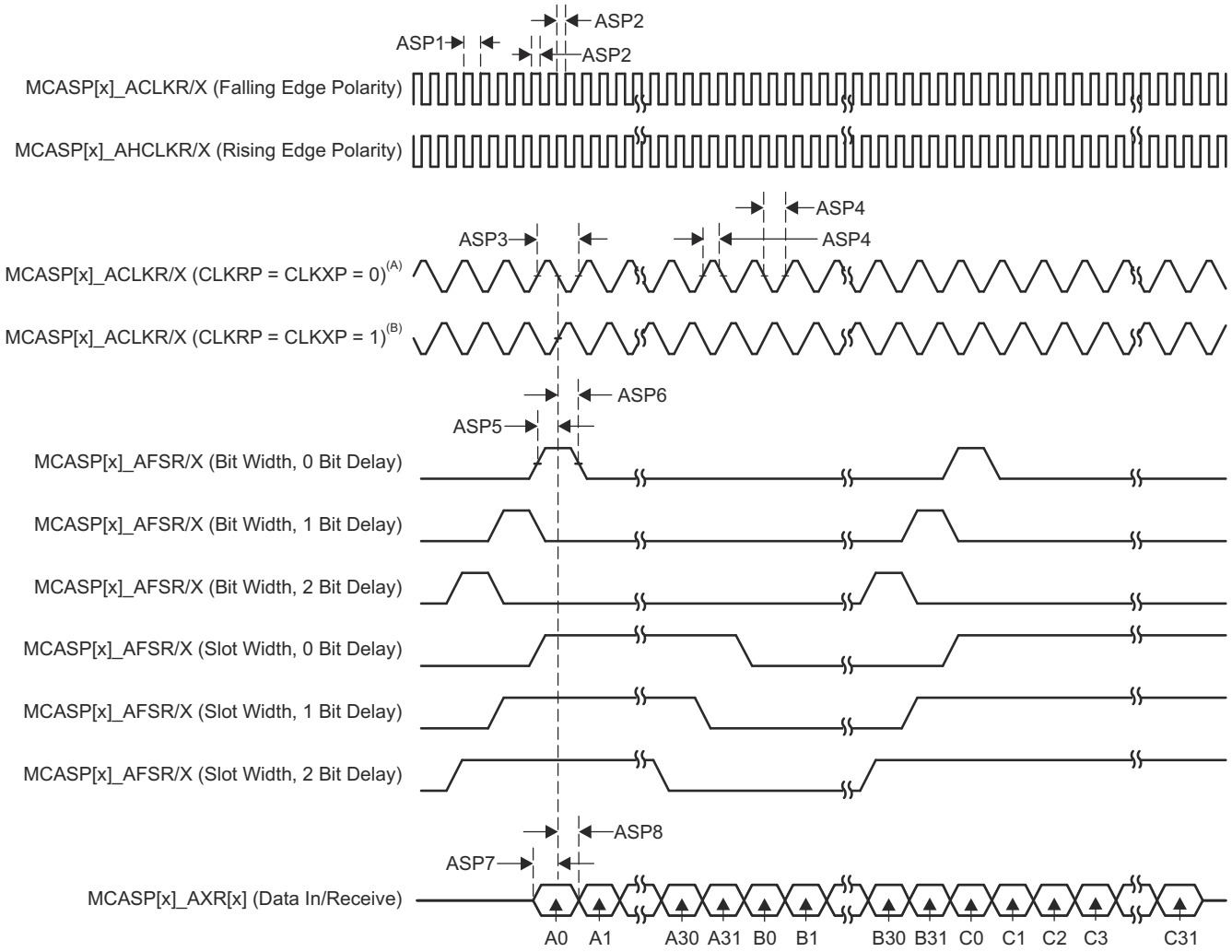

A. For CLKRP = CLKXP = 0, the MCASP transmitter is configured for rising edge (to shift data out) and the MCASP receiver is configured for falling edge (to shift data in).

B. For CLKRP = CLKXP = 1, the MCASP transmitter is configured for falling edge (to shift data out) and the MCASP receiver is configured for rising edge (to shift data in).

Figure 6-66. MCASP Input Timing

Copyright © 2023 Texas Instruments Incorporated

Table 6-45 and Figure 6-67 present switching characteristics over recommended operating conditions for MCASP0 to MCASP2.

Table 6-45. MCASP Switching Characteristics

NO.	PARAMETER	DESCRIPTION(1)	Mode	MIN	MAX	UNIT
ASP9	$t_{c(AHCLKRX)}$	Cycle time, AHCLKR/X		20		ns
ASP10	$t_{w(AHCLKRX)}$	Pulse duration, AHCLKR/X high or low		0.5P - 2.5(2)		ns
ASP11	$t_{c(ACLKRX)}$	Cycle time, ACLKR/X		20		ns
ASP12	$t_{w(ACLKRX)}$	Pulse duration, ACLKR/X high or low		0.5R - 2.5(3)		ns
ASP13	$t_{d(ACLKRX-AFSRX)}$	Delay time, ACLKR/X transmit edge to AFSR/X output valid	ACLKR/X int	0	6.5	ns
			ACLKR/X ext in/out	2	14	
ASP14	$t_{d(ACLKX-AXR)}$	Delay time, ACLKX transmit edge to AXR output valid	ACLKR/X int	0	6.5	ns
			ACLKR/X ext in/out	2	14	
ASP15	$t_{dis(ACLKX-AXR)}$	Disable time, ACLKX transmit edge to AXR output high impedance	ACLKR/X int	- 0.2	6.61	ns
			ACLKR/X ext in/out	1.71	15.383	

(1) ACLKR internal: ACLKRCTL.CLKRM=1, PDIR.ACLKR = 1
ACLKR external input: ACLKRCTL.CLKRM=0, PDIR.ACLKR=0
ACLKR external output: ACLKRCTL.CLKRM=0, PDIR.ACLKR=1
ACLKX internal: ACLKXCTL.CLKXM=1, PDIR.ACLKX = 1
ACLKX external input: ACLKXCTL.CLKXM=0, PDIR.ACLKX=0
ACLKX external output: ACLKXCTL.CLKXM=0, PDIR.ACLKX=1
(2) P = AHCLKR/X period in ns.
(3) R = ACLKR/X period in ns.

Copyright © 2023 Texas Instruments Incorporated

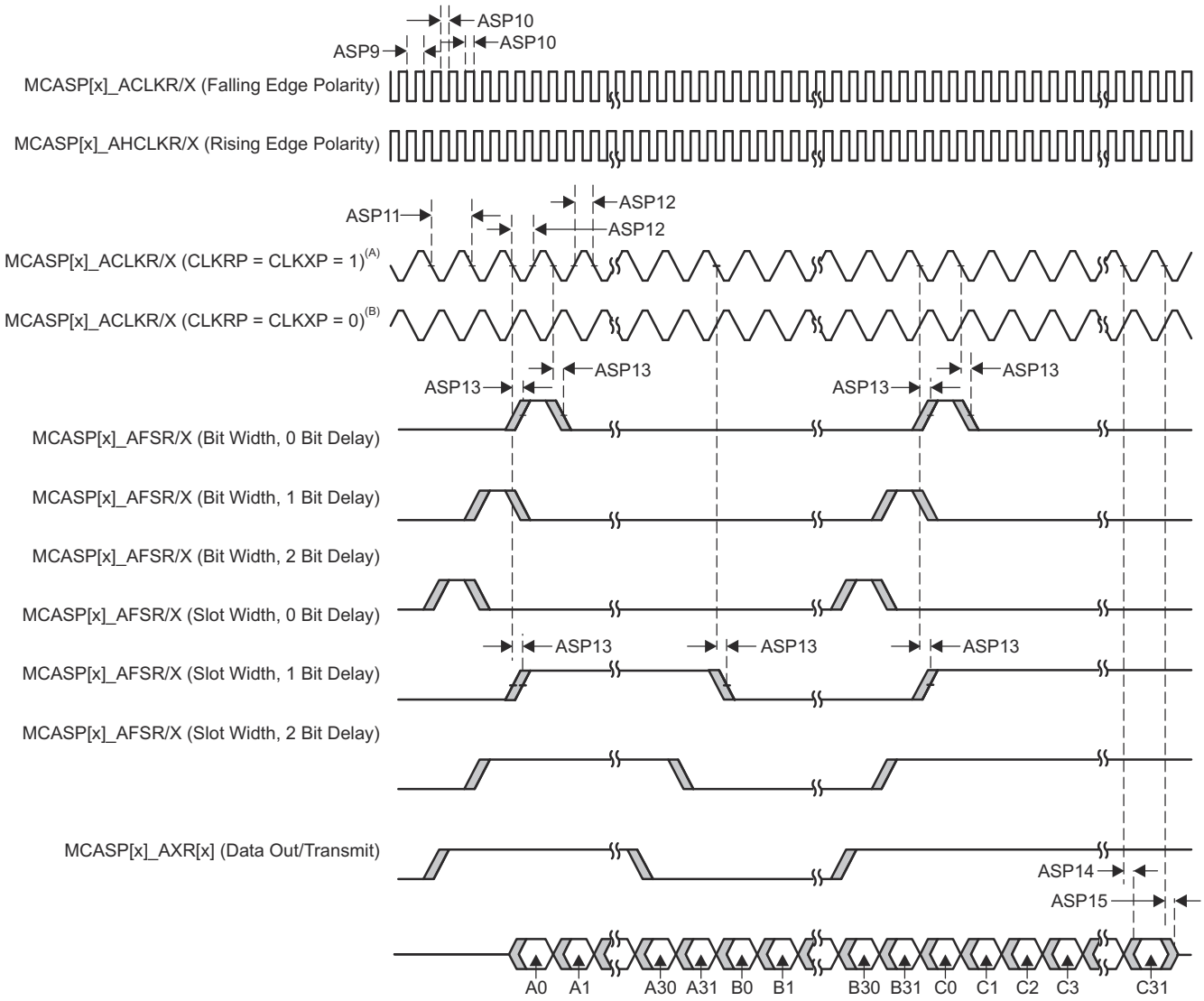

A. For CLKRP = CLKXP = 1, the MCASP transmitter is configured for falling edge (to shift data out) and the MCASP receiver is configured for rising edge (to shift data in).

B. For CLKRP = CLKXP = 0, the MCASP transmitter is configured for rising edge (to shift data out) and the MCASP receiver is configured for falling edge (to shift data in).

Figure 6-67. MCASP Output Timing

For more information, see section *Controller Area Network (MCAN)* in the device TRM.

6.9.5.15 MCSPI

For more details about features and additional description information on the device Serial Port Interface, see the corresponding sections within Section 5.3, *Signal Descriptions* and Section 7, *Detailed Description*.

Table 6-46 presents the timing conditions of SPI.

Table 6-46. SPI Timing Conditions

PARAMETER		MIN	MAX	UNIT
INPUT CONDITIONS				
SR_I	Input slew rate	2	8.5	V/ns
OUTPUT CONDITIONS				

Copyright © 2023 Texas Instruments Incorporated

Table 6-46. SPI Timing Conditions (continued)

PARAMETER		MIN	MAX	UNIT
C_L	Output load capacitance	2	24	pF

6.9.5.15.1 SPI—Master Mode

Table 6-47, Table 6-48, Figure 6-68, Figure 6-69 present Timing Requirements and Switching Characteristics for SPI - Master Mode.

Table 6-47. SPI Timing Requirements - Master Mode

NO.			MIN	MAX	UNIT
SM4	$t_{su(MISO-SPICLK)}$	Setup time, SPI_D[x] valid before SPI_CLK active edge	2		ns
SM5	$t_{h(SPICLK-MISO)}$	Hold time, SPI_D[x] valid after SPI_CLK active edge	3		ns

Table 6-48. SPI Switching Characteristics - Master Mode

NO.	DESCRIPTION		MODE	MIN	MAX	UNIT
SM1	$t_{c(SPICLK)}$	Cycle time, SPI_CLK		20.8		ns
SM2	$t_{w(SPICLKL)}$	Typical Pulse duration, SPI_CLK low		-1 + 0.5P(1)		ns
SM3	$t_{w(SPICLKH)}$	Typical Pulse duration, SPI_CLK high		-1 + 0.5P(1)		ns
SM6	$t_{d(SPICLK-SIMO)}$	Delay time, SPI_CLK active edge to SPI_D[x] transition		-3	2	ns
SM7	$t_{sk(CS-SIMO)}$	Delay time, SPI_CS[x] active to SPI_D[x] transition		5		ns
SM8	$t_{d(SPICLK-CS)}$	Delay time, SPI_CS[x] active to SPI_CLK first edge	Master_PHA0_POL0; Master_PHA0_POL1;	-4 + B(2)		ns
			Master_PHA1_POL0; Master_PHA1_POL1;	-4 + A(3)		ns
SM9	$t_{d(SPICLK-CS)}$	Delay time, SPI_CLK last edge to SPI_CS[x] inactive	Master_PHA0_POL0; Master_PHA0_POL1;	-4 + A(3)		ns
			Master_PHA1_POL0; Master_PHA1_POL1;	-4 + B(2)		ns

(1) P = SPICLK period
(2) B = (TCS + .5) × TSPICLKREF x Fratio, where TCS is a bit field of the SPI_CH(i)CONF register and Fratio = Even >= 2.
(3) When P = 20.8 ns, A = (TCS + 1) × TSPICLKREF, where TCS is a bit field of the SPI_CH(i)CONF register.
When P > 20.8 ns, A = (TCS + 0.5) × Fratio × TSPICLKREF, where TCS is a bit field of the SPI_CH(i)CONF register.

Copyright © 2023 Texas Instruments Incorporated

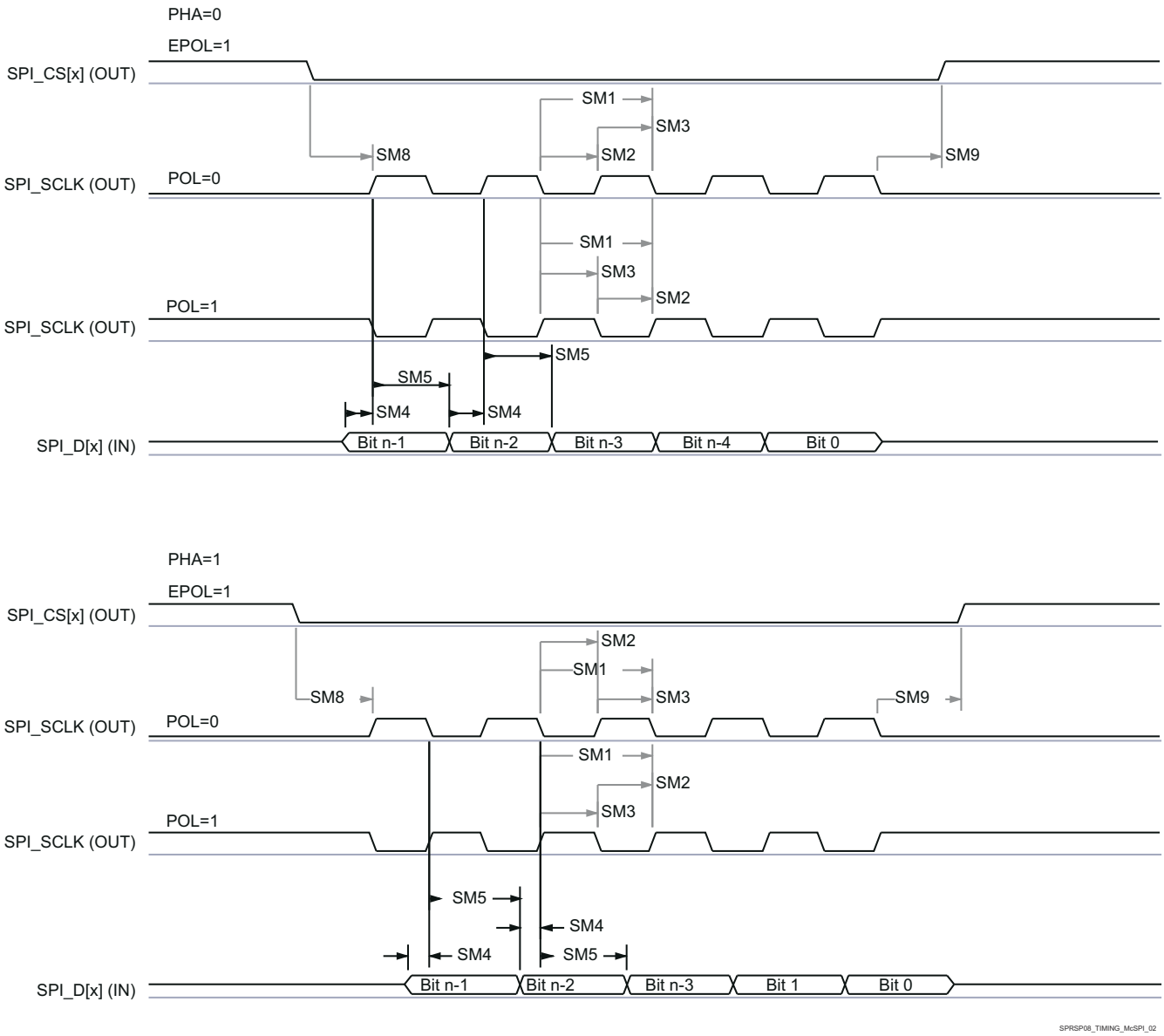

Figure 6-68. SPI Timing Requirements - Master Mode

Copyright © 2023 Texas Instruments Incorporated

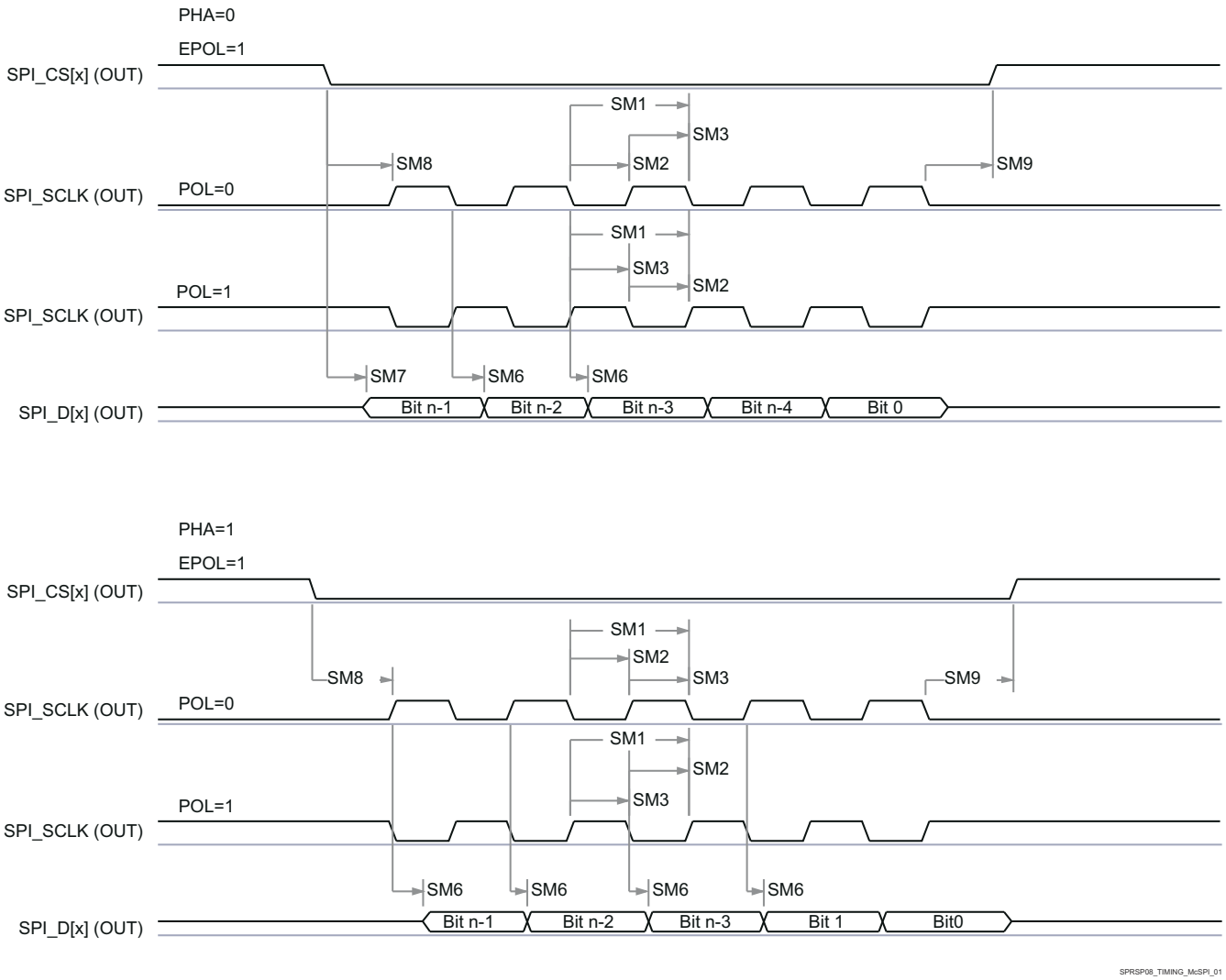

Figure 6-69. SPI Switching Characteristics - Master Mode

6.9.5.15.2 SPI—Slave Mode

Table 6-49, Table 6-50, Figure 6-70and Figure 6-71 present Timing Requirements and Switching Characteristics for SPI - Slave Mode.

Table 6-49. SPI Timing Requirements - Slave Mode

NO.	PARAMETER	DESCRIPTION	MIN	MAX	UNIT
SS1	$t_{c(SPICLK)}$	Cycle time, SPI_CLK	20.8		ns
SS2	$t_{w(SPICLKL)}$	Typical Pulse duration, SPI_CLK low	0.45P(1)		ns
SS3	$t_{w(SPICLKH)}$	Typical Pulse duration, SPI_CLK high	0.45P(1)		ns
SS4	$t_{su(SIMO-SPICLK)}$	Setup time, SPI_D[x] valid before SPI_CLK active edge	5		ns
SS5	$t_{h(SPICLK-SIMO)}$	Hold time, SPI_D[x] valid after SPI_CLK active edge	5		ns
SS8	$t_{su(CS-SPICLK)}$	Setup time, SPI_CS[x] valid before SPI_CLK first edge	5		ns
SS9	$t_{h(SPICLK-CS)}$	Hold time, SPI_CS[x] valid after SPI_CLK last edge	5		ns

Table 6-50. SPI Switching Characteristics - Slave Mode

NO.	PARAMETER	DESCRIPTION	MIN	MAX	UNIT
SS6	$t_{d(SPICLK-SOMI)}$	Delay time, SPI_CLK active edge to mcspi_somi transition	2	5	ns
SS7	$t_{sk(CS-SOMI)}$	Delay time, SPI_CS[x] active edge to mcspi_somi transition	20.95		ns

(1) P = SPICLK period.

Copyright © 2023 Texas Instruments Incorporated

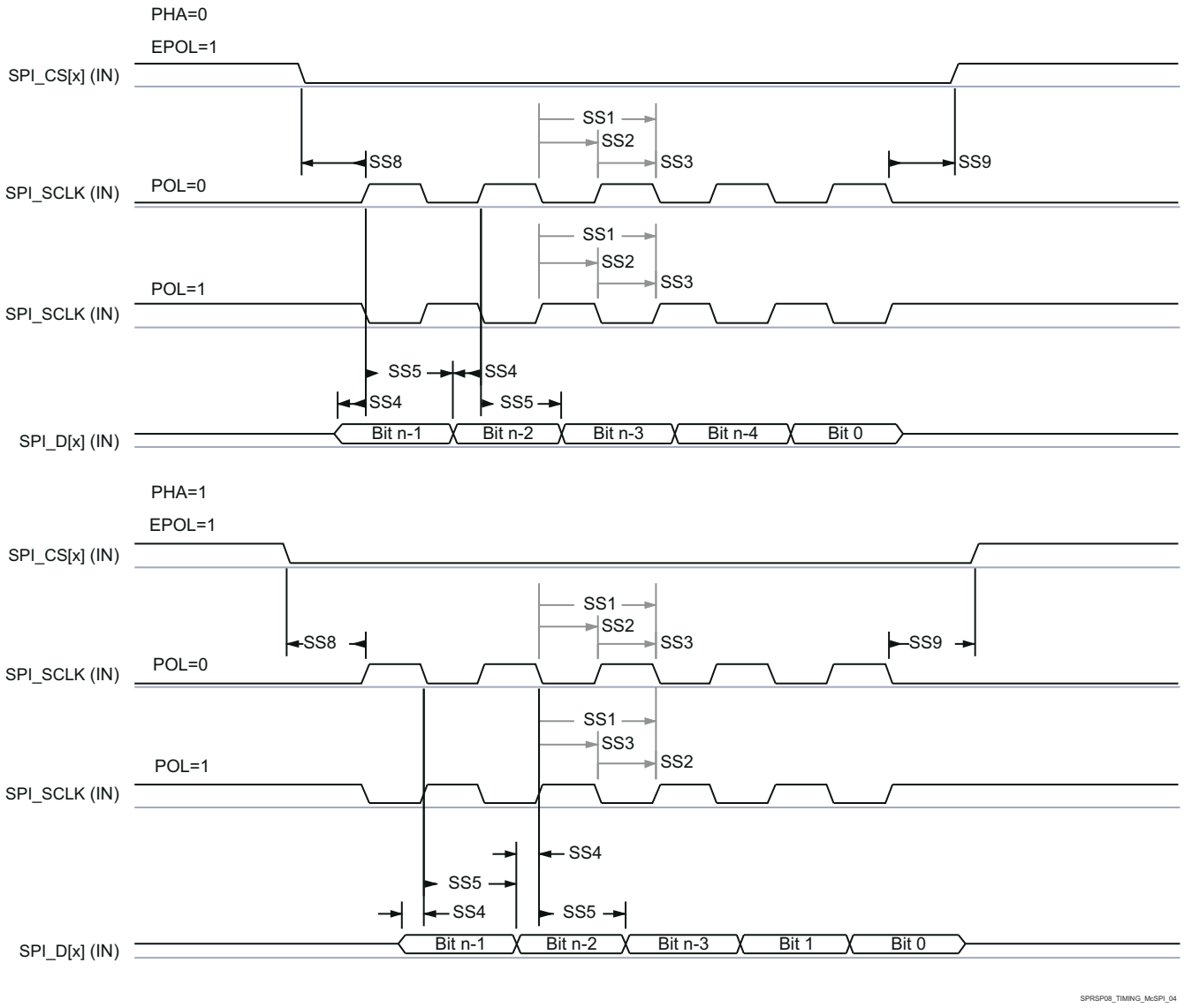

Figure 6-70. SPI Timing Requirements - Slave Mode

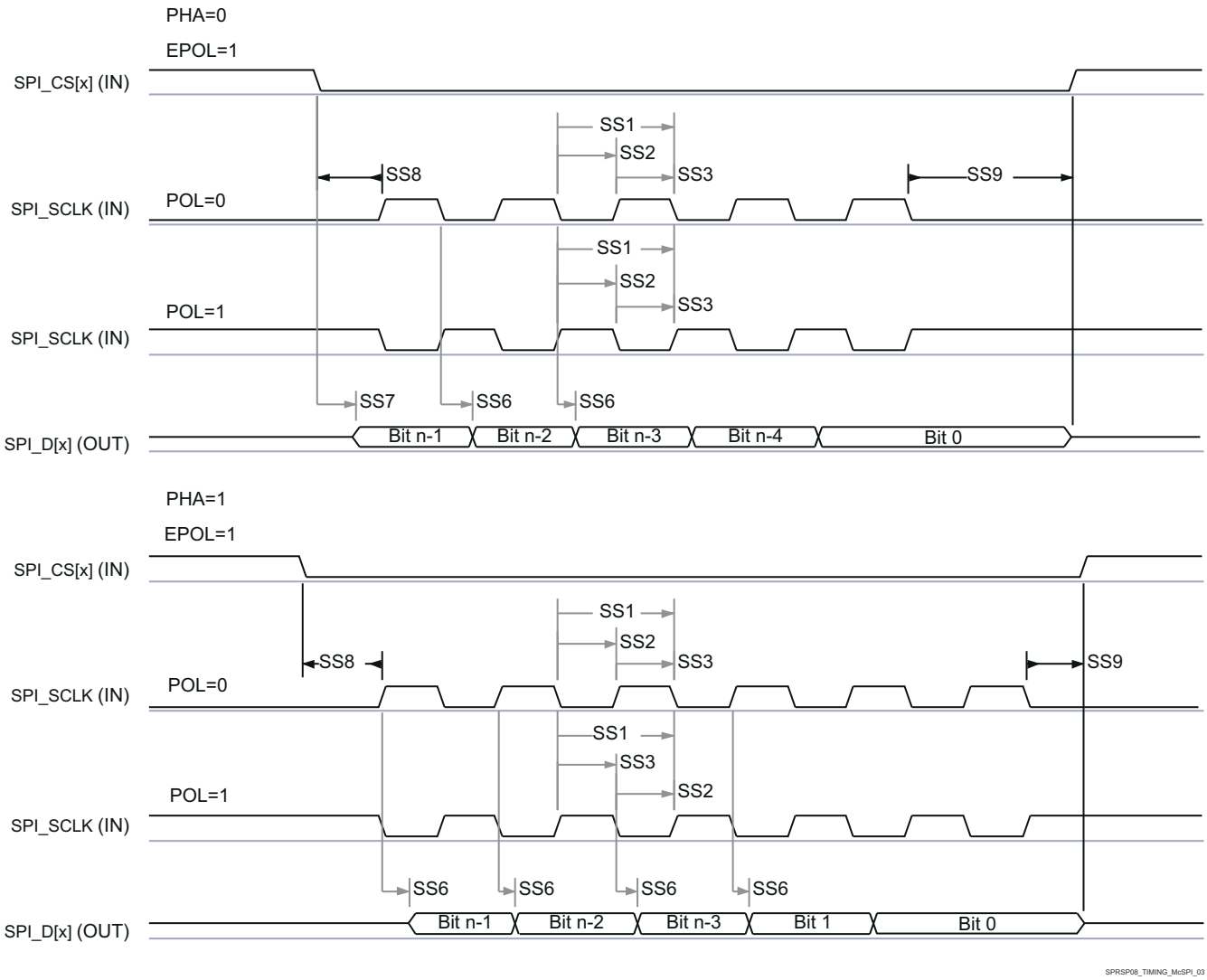

Figure 6-71. SPI Switching Characteristics - Slave Mode

For more information, see section *Multichannel Serial Peripheral Interface (MCSPI)* in the device TRM.

Copyright © 2023 Texas Instruments Incorporated

6.9.5.16 MMCSD

Note

The I/O Timings provided in this section are valid only when the corresponding DLL Delays are configured for some MMC usage modes, as described in Table 6-52.

Note

The MMCi (i = 0 to 1) controller is also referred to as MMCi.

For more details about features and additional description information on the device Multi Media Card, see the corresponding sections within Section 5.3, *Signal Descriptions* and Section 7, *Detailed Description*.

6.9.5.16.1 MMCSDi — eMMC/SD/SDIO Card Interface

MMCi interface is compliant with the SD Standard v3.01 as well as JEDEC eMMC standard v4.5 and it supports the following SD Card and eMMC applications:

- SD Default Speed; JEDEC 3.3V Legacy SDR
- SD High speed; JEDEC 3.3V High Speed SDR
- SD UHS-I SDR12; JEDEC 1.8V Legacy SDR
- SD UHS-I SDR25; JEDEC 1.8V High Speed SDR
- SD UHS-I SDR50
- SD UHS-I SDR104; JEDEC HS200
- UHS-I DDR50; JEDEC High Speed DDR (DDR52)

Note

For more information, see section *Multimedia Card/Secure Digital () Interface* in the device TRM.

Table 6-51 presents the timing conditions for MMC interface.

Table 6-51. MMC Timing Conditions

PARAMETER			MIN	MAX	UNIT
INPUT CONDITIONS					
SR_I	Input slew rate	Default Speed; 3.3V Legacy SDR	0.26	2.64	V/ns
		High Speed; 3.3V High Speed SDR	0.69	2.06	V/ns
		UHS-I SDR12; 1.8V Legacy SDR	0.14	1.44	V/ns
		UHS-I SDR25; 1.8V High Speed SDR	0.3	1.34	V/ns
		3.3V High Speed DDR CMD	0.69	2.06	V/ns
		3.3V High Speed DDR DAT	1.03	2.06	V/ns
		UHS-I DDR50 CMD; 1.8V High Speed DDR CMD	0.3	1.34	V/ns
		UHS-I DDR50 CMD; 1.8V High Speed DDR DAT	0.34	1.34	V/ns
OUTPUT CONDITIONS					
C_L	Output load capacitance	SDR50	1	10	pF
		SDR104; HS200	1	6	pF
		All other modes	1	12	pF
PCB CONNECTIVITY REQUIREMENTS					

Copyright © 2023 Texas Instruments Incorporated

Table 6-51. MMC Timing Conditions (continued)

PARAMETER			MIN	MAX	UNIT
$t_{d(Trace\ Delay)}$	Propagation delay of each trace - SD Specification	Default Speed; SDR12 SDR50; SDR104	134	1474	ps
		High Speed; SDR25	134	1139	ps
		DDR50	255	11394	ps
	Propagation delay of each trace - JEDEC eMMC	1.8V, 3.3V Legacy SDR 1.8V, 3.3V High Speed SDR HS200	134	670	ps
		1.8V/ 3.3 V High Speed DDR (DDR52)	168	670	ps
$t_{d(Trace\ Mismatch\ Delay)}$	Propagation delay mismatch across all traces	Default Speed; 3.3V Legacy SDR		100	ps
		3.3V High Speed SDR; HS400 DAT		8	ps
		All other modes		20	ps

Table 6-52 shows the required DLL software configuration settings for MMC timing modes.

Table 6-52. MMC DLL Delay Mapping for All Timing Modes

REGISTER NAME		MMCSDn_SS_PHY_CTRL_4_REG					MMCSDn_SS_PHY_CTRL_5_REG		
BIT FIELD		[27:24]	[20]	[15:12]	[8]	[4:0]	[17:16]	[9:8]]	[2:0]
BIT FIELD NAME		STRBSEL	OTAPDLYENA	OTAPDLYSEL	ITAPDLYENA	ITAPDLYSEL	SELDLYTXCLK SELDLYRXCLK	SEL100 SEL50	CLKBUFSEL
MODE	DESCRIPTION	STROBE DELAY	OUTPUT DELAY ENABLE	OUTPUT DELAY VALUE	INPUT DELAY ENABLE	INPUT DELAY VALUE	DLL DELAY CHAIN SELECT	DLL REF FREQUENCY	DELAY BUFFER DURATION
Default Speed	4- or 8-bit PHY operating 3.3 V, 25 MHz mode	0x0	0x0	0x0	0x1	0xA	0x3	0x0	0x7
High Speed	4- or 8-bit PHY operating 3.3 V, 50 MHz mode	0x0	0x0	0x0	0x1	0x1	0x3	0x0	0x7
SDR12	4- or 8-bit PHY operating 1.8 V, 25 MHz mode	0x0	0x1	0xF	0x1	0xA	0x3	0x0	0x7
SDR25	4- or 8-bit PHY operating 1.8 V, 50 MHz mode	0x0	0x1	0xF	0x1	0x1	0x3	0x0	0x7
SDR50	4- or 8-bit PHY operating 1.8 V, 100 MHz	0x0	0x1	0x8	0x1	Tuning	0x0	0x2	0x7
High Speed DDR (DDR52)	4- or 8-bit PHY, 1.8V or 3.3V, JEDEC 50 MHz	0x0	0x1	0x5	0x1	0x0	0x0	0x1	0x7
DDR50	4- or 8-bit PHY, 1.8V or 3.3V, SD/SDIO 50 MHz	0x0	0x1	0x4	0x1	Tuning	0x0	0x1	0x7

Copyright © 2023 Texas Instruments Incorporated

Table 6-52. MMC DLL Delay Mapping for All Timing Modes (continued)

REGISTER NAME		MMCSDn_SS_PHY_CTRL_4_REG					MMCSDn_SS_PHY_CTRL_5_REG		
BIT FIELD		[27:24]	[20]	[15:12]	[8]	[4:0]	[17:16]	[9:8]]	[2:0]
BIT FIELD NAME		STRBSEL	OTAPDLYENA	OTAPDLYSEL	ITAPDLYENA	ITAPDLYSEL	SELDLYTXCLK SELDLYRXCLK	SEL100 SEL50	CLKBUFSEL
MODE	DESCRIPTION	STROBE DELAY	OUTPUT DELAY ENABLE	OUTPUT DELAY VALUE	INPUT DELAY ENABLE	INPUT DELAY VALUE	DLL DELAY CHAIN SELECT	DLL REF FREQUENCY	DELAY BUFFER DURATION
SDR104	4- or 8-bit PHY operating 1.8 V, SD/SDIO 200 MHz	0x0	0x1	0x7	0x1	Tuning	0x0	0x0	0x7
HS200	4- or 8-bit PHY operating 1.8 V, JEDEC 200 MHz	0x0	0x1	0x5	0x1	Tuning	0x0	0x0	0x7

For more information, see section *Multimedia Card/Secure Digital (eMMC/SD/SDIO) Interface* in the device TRM.

6.9.5.16.1.1 Default Speed, 3.3V Legacy SDR Mode

Table 6-53 and Table 6-54 present Timing requirements and Switching characteristics for MMCi - Default Speed, 3.3V Legacy SDR in receiver and transmitter mode (see Figure 6-72 and Figure 6-73)

Table 6-53. Timing Requirements for MMCi - Default Speed Mode

NO.	PARAMETER	DESCRIPTION	MIN	MAX	UNIT
DSSD5	$t_{su(cmdV-clkH)}$	Setup time, MMCi_CMD valid before MMCi_CLK rising clock edge	2.15		ns
DSSD6	$t_{h(clkH-cmdV)}$	Hold time, MMCi_CMD valid after MMCi_CLK rising clock edge	19.67		ns
DSSD7	$t_{su(dV-clkH)}$	Setup time, MMCi_DAT[j:0] valid before MMCi_CLK rising clock edge	2.15		ns
DSSD8	$t_{h(clkH-dV)}$	Hold time, MMCi_DAT[j:0] valid after MMCi_CLK rising clock edge	19.67		ns

Table 6-54. Switching Characteristics for MMCi - Default Speed Mode

NO.	PARAMETER	DESCRIPTION	MIN	MAX	UNIT
DSSD0	$f_{op(clk)}$	Operating frequency, MMCi_CLK		25	MHz
DSSD1	$t_{w(clkH)}$	Pulse duration, MMCi_CLK high	18.7		ns
DSSD2	$t_{w(clkL)}$	Pulse duration, MMCi_CLK low	18.7		ns
DSSD3	$t_{d(clkL-cmdV)}$	Delay time, MMCi_CLK falling clock edge to MMCi_CMD transition	-14.1	14.1	ns
DSSD4	$t_{d(clkL-dV)}$	Delay time, MMCi_CLK falling clock edge to MMCi_DAT[j:0] transition	-14.1	14.1	ns

Copyright © 2023 Texas Instruments Incorporated

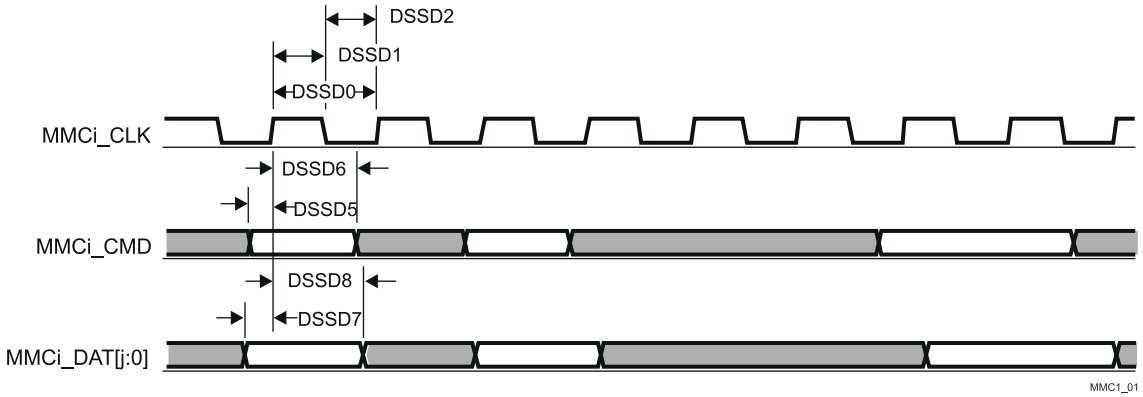

Figure 6-72. eMMC/SD/SDIO in - Default Speed - Receiver Mode

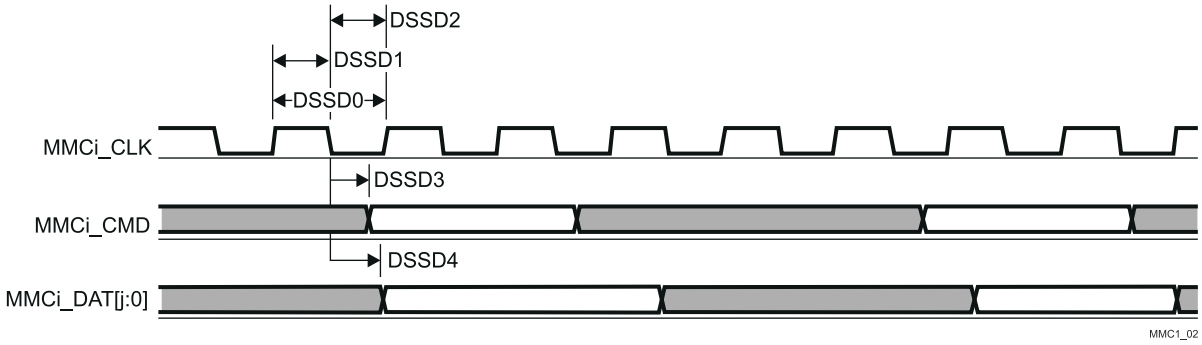

Figure 6-73. eMMC/SD/SDIO in - Default Speed - Transmitter Mode

6.9.5.16.1.2 High Speed, 3.3V High Speed SDR Mode

Table 6-55 and Table 6-56 present Timing requirements and Switching characteristics for MMCi - High Speed and 3.3V High Speed SDR in receiver and transmitter mode (see Figure 6-74 and Figure 6-75).

Table 6-55. Timing Requirements for MMCi - High Speed Mode

NO.	PARAMETER	DESCRIPTION	MIN	MAX	UNIT
HSSD3	$t_{su(cmdV-clkH)}$	Setup time, MMCi_CMD valid before MMCi_CLK rising clock edge	2.91		ns
HSSD4	$t_{h(clkH-cmdV)}$	Hold time, MMCi_CMD valid after MMCi_CLK rising clock edge	2.76		ns
HSSD7	$t_{su(dV-clkH)}$	Setup time, MMCi_DAT[j:0] valid before MMCi_CLK rising clock edge	2.91		ns
HSSD8	$t_{h(clkH-dV)}$	Hold time, MMCi_DAT[j:0] valid after MMCi_CLK rising clock edge	2.76		ns

Table 6-56. Switching Characteristics for MMCi - High Speed Mode

NO.	PARAMETER	DESCRIPTION	MIN	MAX	UNIT
HSSD1	$f_{op(clk)}$	Operating frequency, MMCi_CLK		50	MHz
HSSD2H	$t_{w(clkH)}$	Pulse duration, MMCi_CLK high	9.2		ns
HSSD2L	$t_{w(clkL)}$	Pulse duration, MMCi_CLK low	9.2		ns
HSSD5	$t_{d(clkL-cmdV)}$	Delay time, MMCi_CLK falling clock edge to MMCi_CMD transition	-6.44	3.44	ns
HSSD6	$t_{d(clkL-dV)}$	Delay time, MMCi_CLK falling clock edge to MMCi_DAT[j:0] transition	-6.44	3.44	ns

Copyright © 2023 Texas Instruments Incorporated

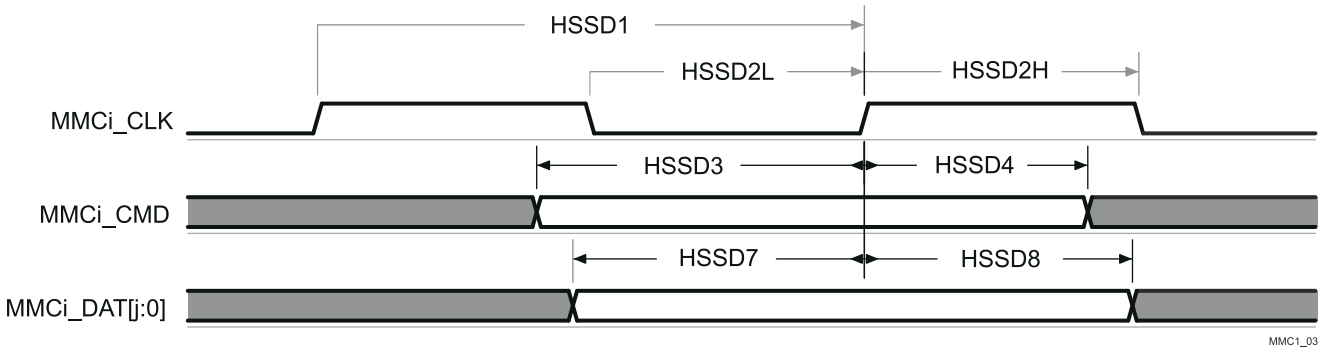

Figure 6-74. eMMC/SD/SDIO in - High Speed - Receiver Mode

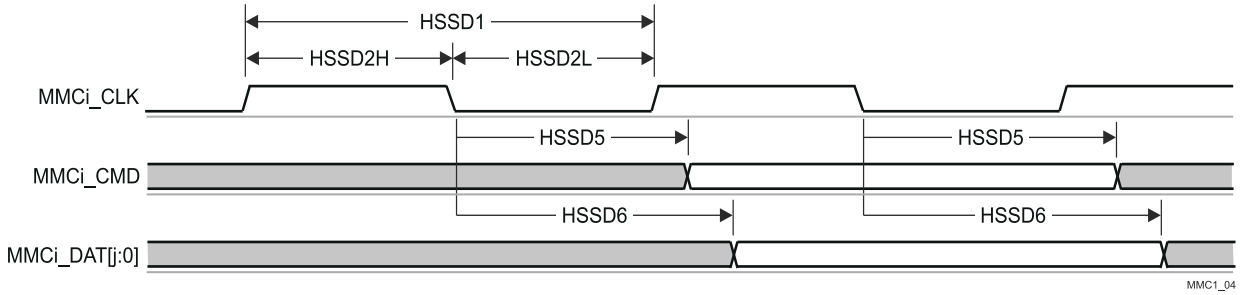

Figure 6-75. eMMC/SD/SDIO in - High Speed - Transmitter Mode

6.9.5.16.1.3 UHS-I SDR12, 1.8-V Legacy SDR Mode

Table 6-57 and Table 6-58 present Timing requirements and Switching characteristics for MMCi - SDR12, 1.8V Legacy SDR in receiver and transmitter mode (see Figure 6-76 and Figure 6-77).

Table 6-57. Timing Requirements for MMCi - SDR12, 1.8-V Legacy SDR Mode

NO.	PARAMETER	DESCRIPTION	MIN	MAX	UNIT
SDR121	$t_{su(cmdV-clkH)}$	Setup time, MMCi_CMD valid before MMCi_CLK rising clock edge	10.04		ns
SDR122	$t_{h(clkH-cmdV)}$	Hold time, MMCi_CMD valid after MMCi_CLK rising clock edge	1.75		ns
SDR123	$t_{su(dV-clkH)}$	Setup time, MMCi_DAT[j:0] valid before MMCi_CLK rising clock edge	10.04		ns
SDR124	$t_{h(clkH-dV)}$	Hold time, MMCi_DAT[j:0] valid after MMCi_CLK rising clock edge	1.75		ns

Table 6-58. Switching Characteristics for MMCi - SDR12, 1.8-V Legacy SDR Mode

NO.	PARAMETER	DESCRIPTION	MIN	MAX	UNIT
SDR125	$f_{op(clk)}$	Operating frequency, MMCi_CLK		25	MHz
SDR126	$t_{w(clkH)}$	Pulse duration, MMCi_CLK high	18.7		ns
SDR127	$t_{w(clkL)}$	Pulse duration, MMCi_CLK low	18.7		ns
SDR128	$t_{d(clkH-cmdV)}$	Delay time, MMCi_CLK rising clock edge to MMCi_CMD transition	1.12	35.68	ns

Copyright © 2023 Texas Instruments Incorporated

Table 6-58. Switching Characteristics for MMCi - SDR12, 1.8-V Legacy SDR Mode (continued)

NO.	PARAMETER	DESCRIPTION	MIN	MAX	UNIT
SDR129	$t_{d(clkH-dV)}$	Delay time, MMCi_CLK rising clock edge to MMCi_DAT[j:0] transition	1.12	35.68	ns

A. There are two modules in MMCi: MMC0 and MMC1

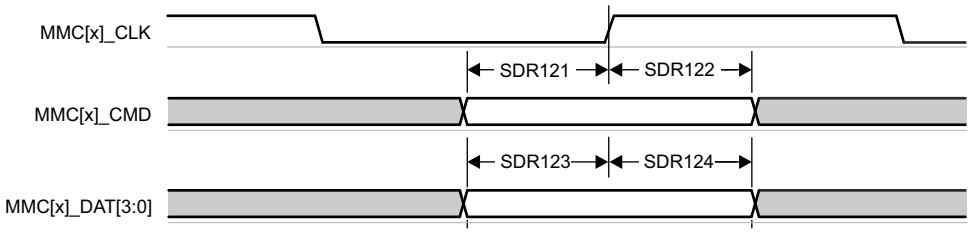

Figure 6-76. eMMC/SD/SDIO in - SDR12, 1.8-V Legacy SDR - Receiver Mode

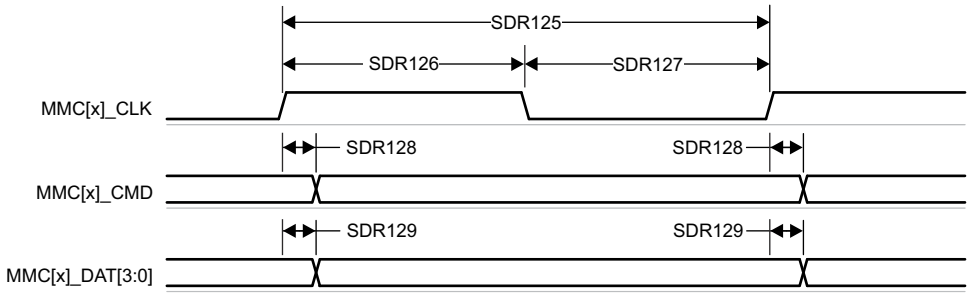

Figure 6-77. eMMC/SD/SDIO in - SDR12, 1.8-V Legacy SDR - Transmitter Mode

6.9.5.16.1.4 UHS-I SDR25 Mode

Table 6-59 and Table 6-60 present Timing requirements and Switching characteristics for MMCi - SDR25, 1.8V High Speed SDR in receiver and transmitter mode (see Figure 6-78 and Figure 6-79).

Table 6-59. Timing Requirements for MMCi - SDR25, 1.8-V High-Speed SDR Mode

NO.	PARAMETER	DESCRIPTION	MIN	MAX	UNIT
SDR251	$t_{su(cmdV-clkH)}$	Setup time, MMCi_CMD valid before MMCi_CLK rising clock edge	2.9		ns
SDR252	$t_{h(clkH-cmdV)}$	Hold time, MMCi_CMD valid after MMCi_CLK rising clock edge	1.75		ns
SDR253	$t_{su(dV-clkH)}$	Setup time, MMCi_DAT[j:0] valid before MMCi_CLK rising clock edge	2.9		ns
SDR254	$t_{h(clkH-dV)}$	Hold time, MMCi_DAT[j:0] valid after MMCi_CLK rising clock edge	1.75		ns

Table 6-60. Switching Characteristics for MMCi - SDR25, 1.8-V High-Speed SDR Mode

NO.	PARAMETER	DESCRIPTION	MIN	MAX	UNIT
SDR255	$f_{op(clk)}$	Operating frequency, MMCi_CLK		50	MHz
SDR256	$t_{w(clkH)}$	Pulse duration, MMCi_CLK high	9.2		ns
SDR257	$t_{w(clkL)}$	Pulse duration, MMCi_CLK low	9.2		ns
SDR258	$t_{d(clkH-cmdV)}$	Delay time, MMCi_CLK rising clock edge to MMCi_CMD transition	2.32	13.18	ns
SDR259	$t_{d(clkH-dV)}$	Delay time, MMCi_CLK rising clock edge to MMCi_DAT[j:0] transition	2.32	13.18	ns

A. There are two MMCi modules: MMC0 and MMC1

Copyright © 2023 Texas Instruments Incorporated

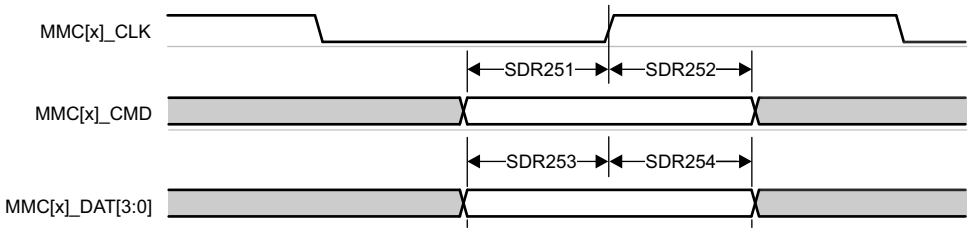

Figure 6-78. eMMC/SD/SDIO in - SDR25, 1.8-V High-Speed SDR - Receiver Mode

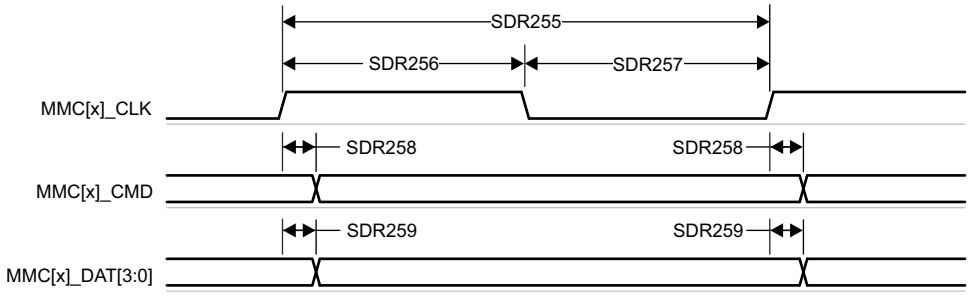

Figure 6-79. eMMC/SD/SDIO in - SDR25, 1.8-V High-Speed SDR - Transmitter Mode

6.9.5.16.1.5 UHS-I DDR50 Mode

Table 6-61 and Table 6-62 present Timing requirements and Switching characteristics for MMCi - DDR50, 1.8-V and 3.3-V High-Speed DDR in receiver and transmitter mode (see Figure 6-80 and Figure 6-81).

Table 6-61. MMCi - 1.8-V, 3.3-V High-Speed DDR Timing Requirements

NO.(1)	PARAMETER(2)		MIN	MAX	UNIT
DDR505	$t_{su(cmdV-clkH)}$	Setup time, MMCi_CMD valid before MMCi_CLK rising clock edge	8.08		ns
DDR506	$t_{h(clkH-cmdV)}$	Hold time, MMCi_CMD valid after MMCi_CLK rising clock edge	1.99		ns
DDR507	$t_{su(dV-clk)}$	Setup time, MMCi_DAT[j:0] valid before MMCi_CLK transition	2.59		ns
DDR508	$t_{h(clk-dV)}$	Hold time, MMCi_DAT[j:0] valid after MMCi_CLK transition	1.75		ns

(1) j in [j:0] is equal to 7 (for MMC0).
(2) Timing requirements for 50 MHz DDR is only applicable when interfacing with JEDEC eMMC devices. Tuning should be done if interfacing to SD/SDIO devices.

Table 6-62. MMCi - DDR50, 1.8-V/3.3-V High-Speed DDR Switching Characteristics

NO.	PARAMETER	DESCRIPTION	MIN	MAX	UNIT
DDR500	$f_{op(clk)}$	Operating frequency, MMCi_CLK		40	MHz
DDR501	$t_{w(clkH)}$	Pulse duration, MMCi_CLK high	11.58		ns
DDR502	$t_{w(clkL)}$	Pulse duration, MMCi_CLK low	11.58		ns
DDR503	$t_{d(clk-cmdV)}$	Delay time, MMCi_CLK rising clock edge to MMCi_CMD transition	3.32	18.06	ns
DDR504	$t_{d(clk-dV)}$	Delay time, MMCi_CLK transition to MMCi_DAT[j:0] transition	2.82	8.87	ns

Copyright © 2023 Texas Instruments Incorporated

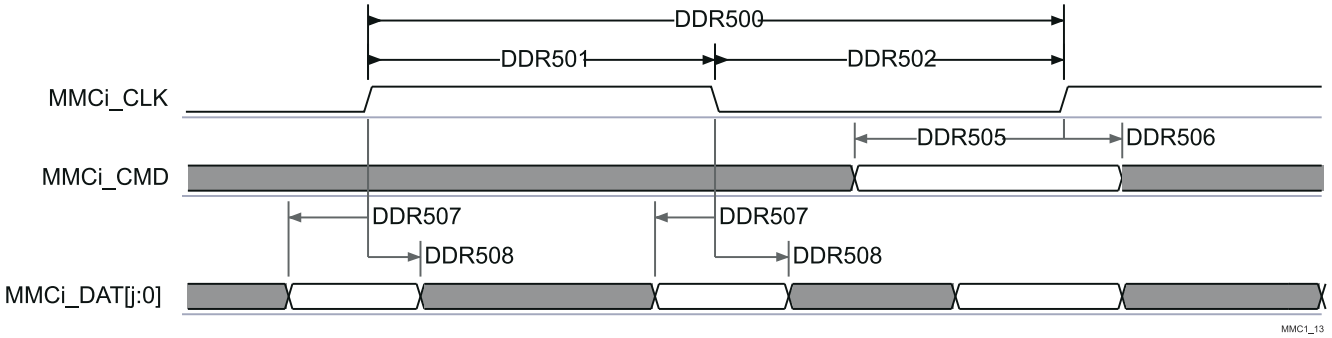

Figure 6-80. eMMC/SD/SDIO - High-Speed DDR - Receive Mode

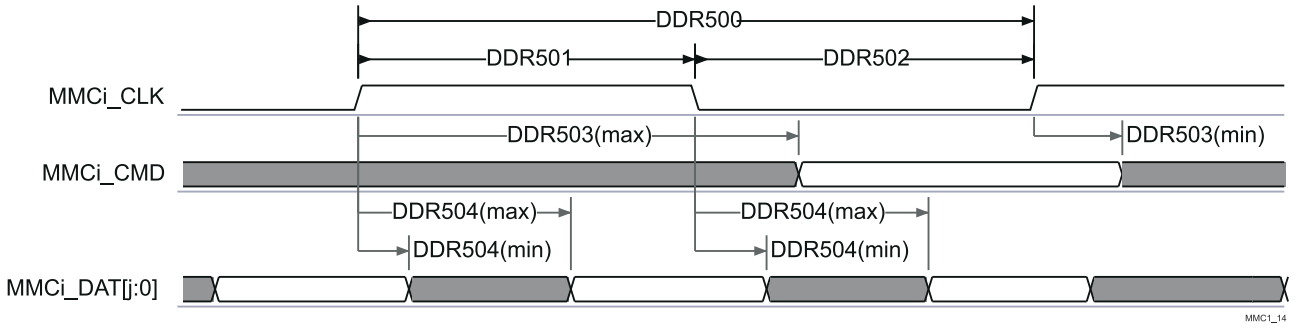

Figure 6-81. eMMC/SD/SDIO - High-Speed DDR - DDR50 - Transmit Mode

6.9.5.16.1.6 UHS-I SDR50 Mode

Table 6-63 present Switching Characteristics for MMCi - SDR50 in transmitter mode (see Figure 6-82).

Table 6-63. Switching Characteristics for MMCi - SDR50 Mode

NO.	PARAMETER	DESCRIPTION	MIN	MAX	UNIT
SDR501	$f_{op(clk)}$	Operating frequency, MMCi_CLK		100	MHz
SDR502H	$t_{w(clkH)}$	Pulse duration, MMCi_CLK high	4.45		ns
SDR502L	$t_{w(clkL)}$	Pulse duration, MMCi_CLK low	4.45		ns
SDR505	$t_{d(clkH-cmdV)}$	Delay time, MMCi_CLK rising clock edge to MMCi_CMD transition	1.12	6.43	ns
SDR506	$t_{d(clkH-dV)}$	Delay time, MMCi_CLK rising clock edge to MMCi_DAT[j:0] transition	1.12	6.43	ns

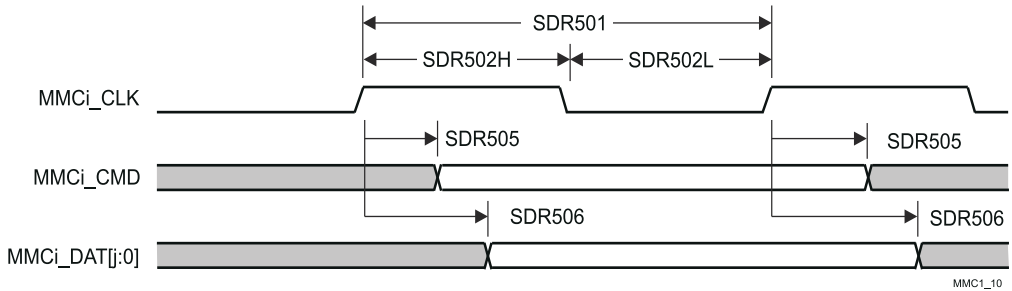

Figure 6-82. eMMC/SD/SDIO in - High Speed SDR50 - Transmitter Mode

6.9.5.16.1.7 UHS-I SDR104 / HS200 Mode

Table 6-64 presents Switching characteristics for MMCi - SDR104, HS200 in transmitter mode (see Figure 6-83)

Copyright © 2023 Texas Instruments Incorporated

Table 6-64. Switching Characteristics for MMCi - SDR104, HS200 Mode

NO.	PARAMETER	DESCRIPTION	MIN	MAX	UNIT
SDR1041	$f_{op(clk)}$	Operating frequency, MMCi_CLK		200	MHz
SDR1042H	$t_{w(clkH)}$	Pulse duration, MMCi_CLK high	2.08		ns
SDR1042L	$t_{w(clkL)}$	Pulse duration, MMCi_CLK low	2.08		ns
SDR1045	$t_{d(clkH-cmdV)}$	Delay time, MMCi_CLK rising clock edge to MMCi_CMD transition	1.12	3.16	ns
SDR1046	$t_{d(clkH-dV)}$	Delay time, MMCi_CLK rising clock edge to MMCi_DAT[j:0] transition	1.12	3.16	ns

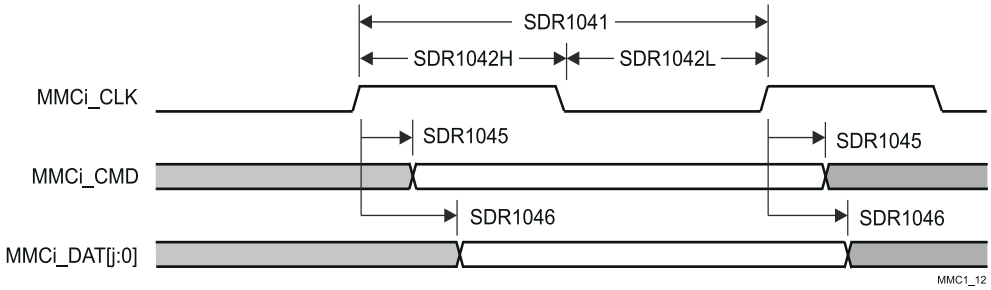

Figure 6-83. eMMC/SD/SDIO in - High Speed SDR104, HS200 - Transmitter Mode

For more information, see section *Multimedia Card/Secure Digital (eMMC/SD/SDIO) Interface* in the device TRM.

6.9.5.17 CPTS

Table 6-65 presents CPTS Timing Conditions.

Table 6-65. CPTS Timing Conditions

PARAMETER	DESCRIPTION	MIN	MAX	UNIT
INPUT CONDITIONS				
SR_I	Input slew rate	0.5	5	V/ns
OUTPUT CONDITIONS				
C_L	Output load capacitance	2	10	pF

Section 6.9.5.17.1, Section 6.9.5.17.2, Figure 6-84, and Figure 6-85 present timing requirement and switching characteristics of the CPTS interface.

6.9.5.17.1 CPTS Timing Requirements

NO.	PARAMETER	DESCRIPTION	MIN	MAX	UNIT
T1	$t_{w(HWTSPUSHH)}$	HWnTSPUSH(2) pulse duration, high	6 + 12P(1)		ns
T2	$t_{w(HWTSPUSHL)}$	HWnTSPUSH(2) pulse duration, low	6 + 12P(1)		ns
T3	$t_{c(RFT_CLK)}$	RFT_CLK cycle time	5	8	ns
T4	$t_{w(RFT_CLKH)}$	RFT_CLK pulse duration, high	0.45 * T(3)		ns
T5	$t_{w(RFT_CLKL)}$	RFT_CLK pulse duration, low	0.45 * T(3)		ns

(1) P = functional clock period in ns.
(2) In HWnTSPUSH, n = 1 to 2.
(3) T = RFT_CLK period in ns.

Copyright © 2023 Texas Instruments Incorporated

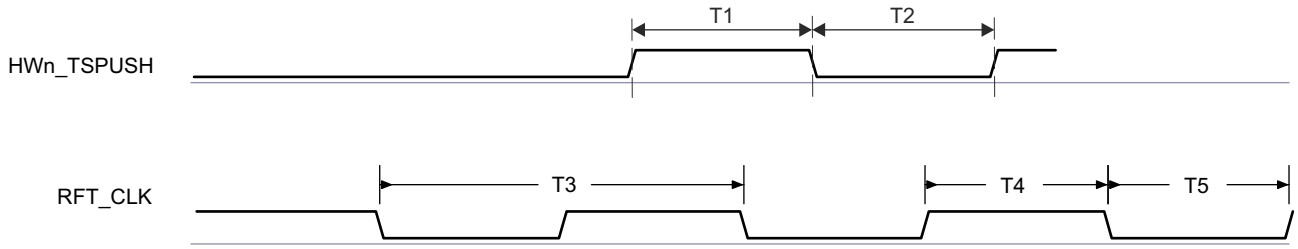

Figure 6-84. CPTS Input Timing

6.9.5.17.2 CPTS Switching Characteristics

NO.	PARAMETER	DESCRIPTION	SOURCE	MIN	MAX	UNIT
T6	$t_{w(TS_COMPH)}$	Pulse duration, TS_COMP high		-6+36P[1]		ns
T7	$t_{w(TS_COMPL)}$	Pulse duration, TS_COMP low		-6+36P[1]		ns
T8	$t_{w(TS_SYNCH)}$	Pulse duration, TS_SYNC high		-6+36P[1]		ns
T9	$t_{w(TS_SYNCL)}$	Pulse duration, TS_SYNC low		-6+36P[1]		ns
T10	$t_{w(SYNC_OUTH)}$	Pulse duration, SYNCn_OUT[2] high	TS_SYNC	-6+36P[1]		ns
			TS_GENF	-6+5P[1]		ns
T11	$t_{w(SYNC_OUTL)}$	Pulse duration, SYNCn_OUT[2] low	TS_SYNC	-6+36P[1]		ns
			TS_GENF	-6+5P[1]		ns

(1) P = functional clock period in ns.
(2) n = 0 to 3 in SYNCn_OUT

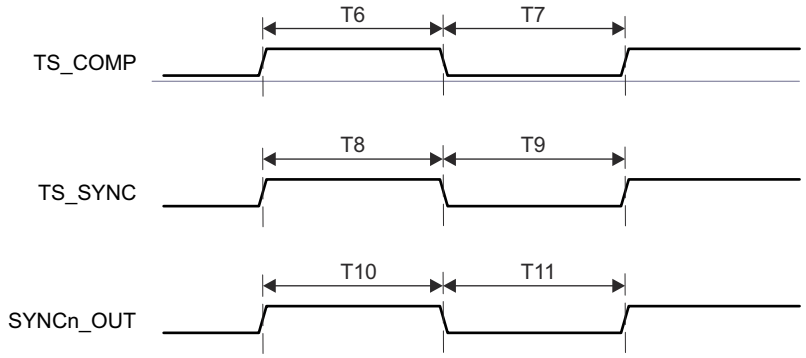

Figure 6-85. CPTS Switching Characteristics

For more information, see section *Navigator Subsystem (NAVSS)* section in *Data Movement Architecture (DMA)* chapter in the device TRM.

Copyright © 2023 Texas Instruments Incorporated

6.9.5.18 OSPI

For more details about features and additional description information on the device Octal Serial Peripheral Interface, see the corresponding sections within Section 5.3, *Signal Descriptions* and Section 7, *Detailed Description*.

Table 6-66 presents timing conditions for OSPI.

Table 6-66. OSPI Timing Conditions

PARAMETER			MIN	MAX	UNIT
INPUT CONDITIONS					
SR_I	Input slew rate	All modes	1	6	V/ns
OUTPUT CONDITIONS					
C_L	Output load capacitance	All modes	3	10	pF
PCB CONNECTIVITY REQUIREMENTS					
$t_{d(Trace\ Delay)}$	Propagation delay OSPI_CLK trace	Internal Loopback; Internal Pad Loopback		450	ps
	Propagation delay OSPI_LBCLKO trace	External Board Loopback	2*L(2)-30	2*L(2)+30	ps
	Propagation delay OSPI_DQS trace	DQS	L(2)-30	L(2)+30	ps
$t_{d(Trace\ Mismatch\ Delay)}$	Propagation delay mismatch OSPI_D[i:0](1), OSPI_CSn relative to OSPI_CLK	All modes		60	ps

(1) i in D[i:0] = 0 to 7 for OSPI0; i in [i:0] = 3 for OSPI1
(2) L = Propagation delay of OSPI_CLK trace

6.9.5.18.1 OSPI with Data Training

Note

I/O timing requirements and switching characteristics are not applicable when OSPI is used with data training. Follow the Section 8.2.2, *OSPI and QSPI Board Design and Layout Guidelines* to ensure proper operation.

6.9.5.18.1.1 OSPI Switching Characteristics - Data Training

PARAMETER		MODE	MIN	MAX	UNIT
$t_{c(CLK)}$	Cycle time, CLK	1.8V, SDR	5.00		ns
		3.3V, SDR	7.52		ns
		1.8V, DDR	6.02		ns
		3.3V, DDR	7.52		ns

6.9.5.18.2 OSPI without Data Training

Note

The I/O Timings provided in this section are only applicable when data training is not implemented. Additionally, the I/O Timings are valid only for some OSPI usage modes when the corresponding DLL Delays are configured as described in Table 6-67 found in this section.

Section 6.9.5.18.2.4, Section 6.9.5.18.2.2, Figure 6-90, and Figure 6-88 present switching characteristics for OSPI DDR and SDR Mode.

Copyright © 2023 Texas Instruments Incorporated

6.9.5.18.2.1 OSPI Timing Requirements - SDR Mode

Table 6-67. OSPI DLL Delay Mapping - SDR Timing Modes

MODE	OSPI_PHY_CONFIGURATION_REG BIT FIELD	DELAY VALUE
All modes	PHY_CONFIG_TX_DLL_DELAY_FLD	0x0
	PHY_CONFIG_RX_DLL_DELAY_FLD	0x0

see Figure 6-86 and Figure 6-87

NO.			MODE	MIN	MAX	UNIT
O19	$t_{su(D-CLK)}$	Setup time, D[i:0] valid before active CLK edge(1)	1.8V, Internal Loopback	-2.18		ns
			3.3V, Internal Loopback	-1.7		ns
O20	$t_{h(CLK-D)}$	Hold time, D[i:0] valid after active CLK edge(1)	1.8V, Internal Loopback	7.62		ns
			3.3V, Internal Loopback	8.1		ns
O21	$t_{su(D-LBCLK)}$	Setup time, D[i:0] valid before active LBCLK input (DQS) edge(1)	1.8V, External Board Loopback	-3.24		ns
			3.3V, External Board Loopback	-2.72		ns
O22	$t_{h(LBCLK-D)}$	Hold time, D[i:0] valid after active LBCLK input (DQS) edge(1)	1.8V, External Board Loopback	3.81		ns
			3.3V, External Board Loopback	4.33		ns

(1) i in [i:0] = 7 for OSPI0, i in [i:0] = 3 for OSPI1

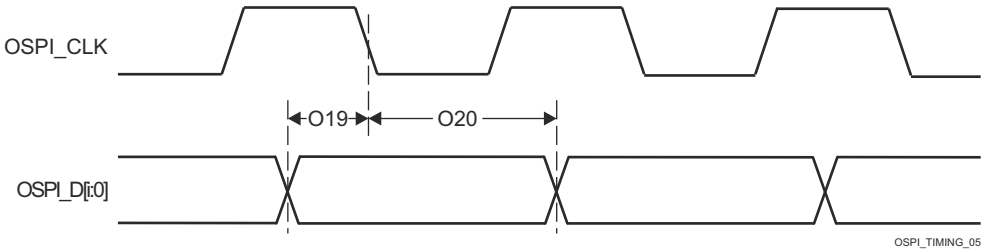

Figure 6-86. OSPI Timing Requirements - SDR, Internal Clock and Internal Pad Loopback Clock

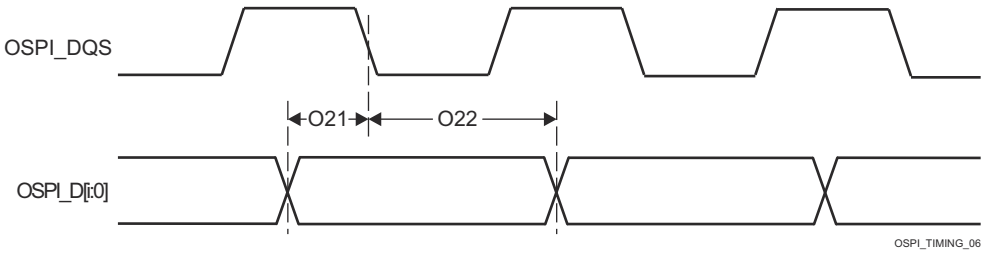

Figure 6-87. OSPI Timing Requirements - SDR, External Loopback Clock

6.9.5.18.2.2 OSPI Switching Characteristics - SDR Mode

NO.	DESCRIPTION(1)		MODE	MIN	MAX	UNIT
O7	$t_{c(CLK)}$	Cycle time, CLK	1.8V	7		ns
			3.3V	7.52		ns
O8	$t_{w(CLKL)}$	Pulse duration, CLK low		-0.3+0.475×P (1)		ns
O9	$t_{w(CLKH)}$	Pulse duration, CLK high		-0.3+0.475×P (1)		ns

Copyright © 2023 Texas Instruments Incorporated

NO.	DESCRIPTION(1)		MODE	MIN	MAX	UNIT
O10	$t_{d(CLK-CSn)}$	Delay time, CLK rising edge to CSn active edge	1.8V	0.475 × P + 0.975 × N × R - 1 (1) (2) (4)	0.475 × P + 0.975 × N × R + 1 (1) (2) (4)	ns
			3.3V	0.475 × P + 0.975 × N × R - 1 (1) (2) (4)	0.475 × P + 0.975 × N × R + 1 (1) (2) (4)	ns
O11	$t_{d(CLK-CSn)}$	Delay time, CLK rising edge to CSn inactive edge	1.8V	0.475 × P + 0.975 × N × R - 1 (1) (3) (4)	0.475 × P + 0.975 × N × R (1) (3) (4)	ns
			3.3V	0.475 × P + 0.975 × N × R - 1 (1) (3) (4)	0.475 × P + 0.975 × N × R + 1 (1) (3) (4)	ns
O12	$t_{d(CLK-D)}$	Delay time, CLK active edge to D[i:0] transition	1.8V	-1.15	1.25	ns
			3.3V	-1.33	1.51	ns

(1) P = CLK cycle time = SCLK period
(2) N = OSPI_DEV_DELAY_REG[D_INIT_FLD]
(3) N = OSPI_DEV_DELAY_REG[D_AFTER_FLD]
(4) R = refclk

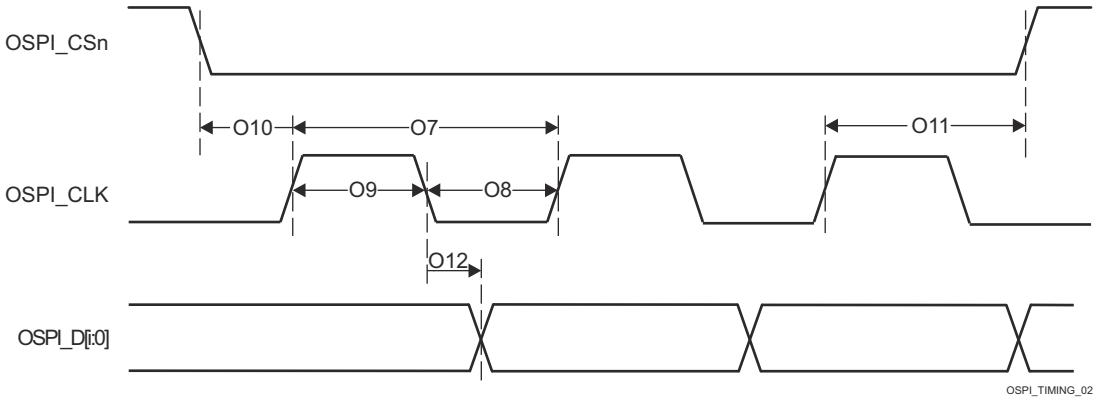

Figure 6-88. OSPI Switching Characteristics - SDR

Section 6.9.5.18.2.3, Section 6.9.5.18.2.1, Figure 6-89, and Figure 6-87 presents timing requirements for OSPI DDR and SDR Mode.

6.9.5.18.2.3 OSPI Timing Requirements - DDR Mode

Table 6-68. OSPI DLL Delay Mapping - DDR Timing Modes

OSPI Instance	MODE	OSPI_PHY_CONFIGURATION_REG BIT FIELD	DELAY VALUE
OSPI0	1.8V	PHY_CONFIG_TX_DLL_DELAY_FLD	0x41
	3.3V	PHY_CONFIG_TX_DLL_DELAY_FLD	0x46
	1.8V DQS	PHY_CONFIG_RX_DLL_DELAY_FLD	0x16
	3.3V DQS	PHY_CONFIG_RX_DLL_DELAY_FLD	0x3E
	Non-PHY mode	PHY_CONFIG_RX_DLL_DELAY_FLD	0x0
OSPI1	1.8V	PHY_CONFIG_TX_DLL_DELAY_FLD	0x44
	3.3V	PHY_CONFIG_TX_DLL_DELAY_FLD	0x4C
	1.8V DQS	PHY_CONFIG_RX_DLL_DELAY_FLD	0x16
	3.3V DQS	PHY_CONFIG_RX_DLL_DELAY_FLD	0x40
	Non-PHY mode	PHY_CONFIG_RX_DLL_DELAY_FLD	0x0

Copyright © 2023 Texas Instruments Incorporated

Table 6-69. OSPI Timing Requirements - DDR Mode

see Figure 6-89

NO.			MODE	MIN	MAX	UNIT
O15	$t_{su(D-LBCLK)}$	Setup time, D[i:0](1) valid before active LBCLK (DQS) edge	1.8V, External Board Loopback	0.52		ns
			3.3V, External Board Loopback	1.97		ns
O16	$t_{h(LBCLK-D)}$	Hold time, D[i:0](1) valid after active LBCLK (DQS) edge	1.8V, External Board Loopback	1.24 (2)		ns
			3.3V, External Board Loopback	1.44 (2)		ns
O17	$t_{su(D-DQS)}$	Setup time, D[i:0](1) valid before active DQS edge	1.8V, DQS	-0.46		ns
			3.3V, DQS	-0.66		ns
O18	$t_{h(DQS-D)}$	Hold time, D[i:0](1) valid after active DQS edge	1.8V, DQS	3.59		ns
			3.3V, DQS	8.89		ns

(1) i in [i:0] = 7 for OSPI0, i in [i:0] = 3 for OSPI1
(2) This Hold time requirement is larger than the Hold time provided by a typical flash device. Therefore, the trace length between the SoC and flash device must be sufficiently long enough to ensure that the Hold time is met at the SoC. Refer to Section 8.2.2 for more details.

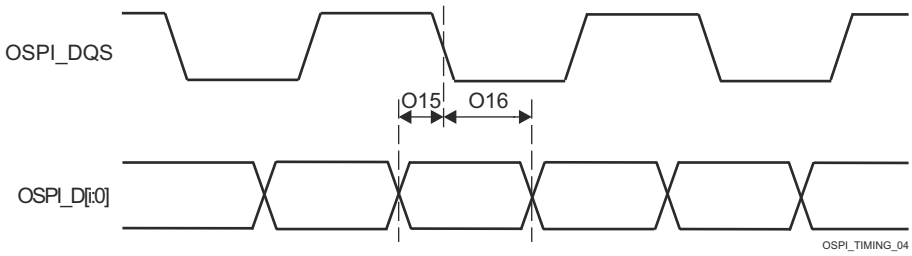

Figure 6-89. OSPI Timing Requirements - DDR, External Loopback Clock and DQS

6.9.5.18.2.4 OSPI Switching Characteristics - DDR Mode

NO.	PARAMETER	DESCRIPTION	MODE	MIN	MAX	UNIT
O1	$t_{c(CLK)}$	Cycle time, CLK		19		ns
O2	$t_{w(CLKL)}$	Pulse duration, CLK low		-0.3+0.475×P (2)		ns
O3	$t_{w(CLKH)}$	Pulse duration, CLK high		-0.3+0.475×P (2)		ns
O4	$t_{d(CLK-CSn)}$	Delay time, CSn active edge to CLK rising edge	1.8 V	0.475 × P + 0.975 × N × R (2) (3) (5)	0.475 × P + 0.975 × N × R + 7.7 (2) (3) (5)	ns
			3.3 V	0.475 × P + 0.975 × N × R (2) (3) (5)	0.475 × P + 0.975 × N × R + 8 (2) (3) (5)	ns
O5	$t_{d(CLK-CSn)}$	Delay time, CLK rising edge to CSn inactive edge	1.8 V	0.475 × P + 0.975 × N × R - 7.7(2) (4) (5)	0.475 × P + 0.975 × N × R (2) (4) (5)	ns
			3.3 V	0.475 × P + 0.975 × N × R - 8(2) (4) (5)	0.475 × P + 0.975 × N × R (2) (4) (5)	ns
O6	$t_{d(CLK-D)}$	Delay time, CLK active edge to D[i:0](1) transition	1.8 V	-7.7	-1.56	ns
			3.3 V	-7.7	-1.56	ns

(1) i in [i:0] = 7 for OSPI0, i in [i:0] = 3 for OSPI1
(2) P = CLK cycle time = SCLK period
(3) N = OSPI_DEV_DELAY_REG[D_INIT_FLD]
(4) N = OSPI_DEV_DELAY_REG[D_AFTER_FLD]
(5) R = refclk

Copyright © 2023 Texas Instruments Incorporated

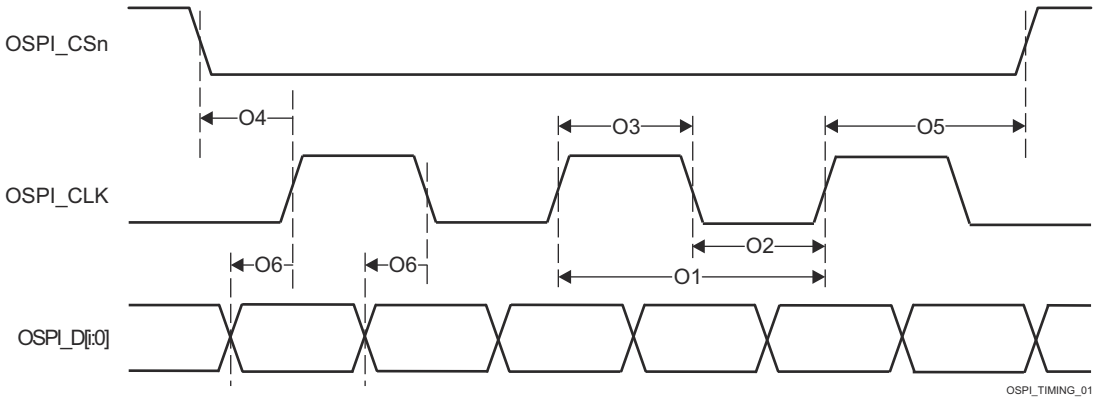

Figure 6-90. OSPI Switching Characteristics - DDR

For more information, see section *Octal Serial Peripheral Interface (OSPI)* in the device TRM.

6.9.5.19 OLDI

6.9.5.19.1 OLDI Switching Characteristics

NO.	PARAMETER	DESCRIPTION(1)	MIN	TYP	MAX	UNIT
OLDI1	$t_{t(LHTT)}$	Low-to-high transition time of LVDS differential signals: OLDI0_CLKP/N, OLDI0_AxP/N, x = [3:0], with BOOSTA_EN = 0 (Fast rise/fall disabled)			0.5	ns
		Low-to-high transition time of LVDS differential signals: OLDI0_CLKP/N, OLDI0_AxP/N, x = [3:0], with BOOSTA_EN = 1 (Fast rise/fall enabled)			0.25	ns
OLDI2	$t_{t(HLTT)}$	High-to-low transition time of LVDS differential signals: OLDI0_CLKP/N, OLDI0_AxP/N, x = [3:0], with BOOSTA_EN = 0 (Fast rise/fall disabled)			0.5	ns
		High-to-low transition time of LVDS differential signals: OLDI0_CLKP/N, OLDI0_AxP/N, x = [3:0], with BOOSTA_EN = 1 (Fast rise/fall enabled)			0.25	ns
OLDI3	$t_{c(CLK)}$	Output pixel clock period (OLDI0_CLKP/N)	6.06		110.01	ns
OLDI4	$t_{w(BIT)}$	Output bit width (OLDI0_AxP/N, x = [3:0])		1		UI(2)
OLDI5	$t_{(TPPx, x=[6:0])}$	Output pulse positions normalized for each bit (OLDI0_AxP/N, x = [3:0])		7-1		UI(2)
OLDI6	$\Delta t_{(TPP)}$	Variation of pulse positions for each bit from their normalized center (OLDI0_AxP/N, x = [3:0])			0.1	UI(2)
OLDI7	$t_{sk(TCCS)}$	Output channel to channel skew (OLDI0_CLKP/N, OLDI0_AxP/N, x = [3:0])			50	ps
OLDI8	$t_{j(TJCC)}$	Output jitter cycle-to-cycle (OLDI0_CLKP/N, OLDI0_AxP/N, x = [3:0])			0.04	UI(2)
OLDI9	$t_{j(IJIT)}$	Total jitter tolerance (Includes data to clock skew, pulse position variation from normalized edges (OLDI0_AxP/N, x = [3:0])			0.25	UI(2)

(1) Measured based on 20% - 80% transitions and PCB trace of ~2in with 100 Ω termination on differential lines.
(2) UI = $t_{c(CLK)}$ / 7

Copyright © 2023 Texas Instruments Incorporated

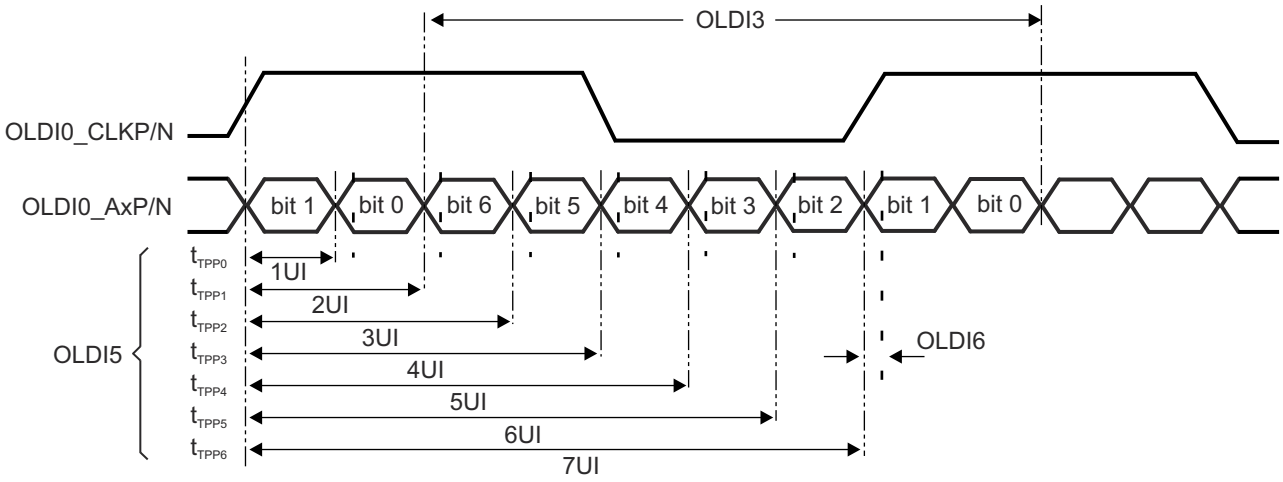

A. x in OLDI0_AxP/N = [3:0]

Figure 6-91. OLDI Output Pulse Positions

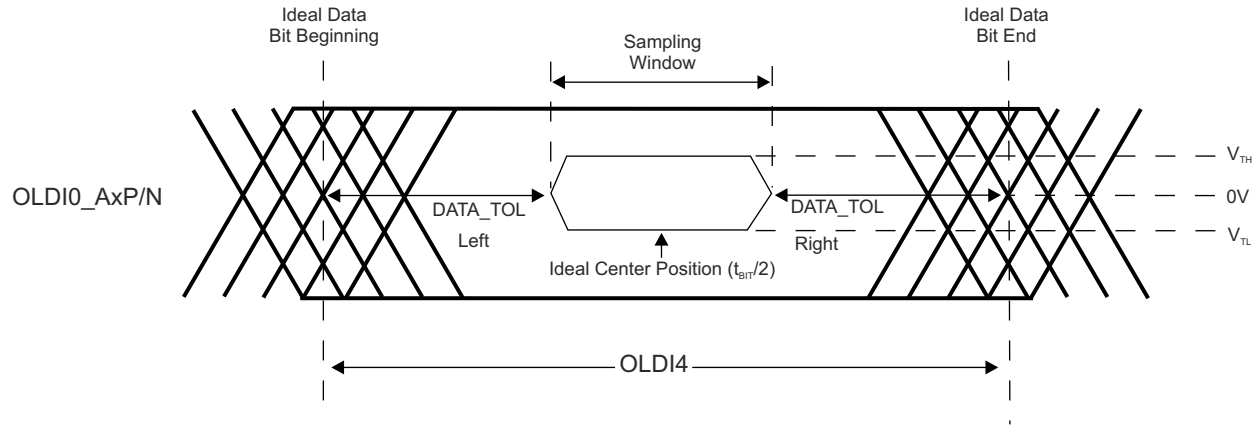

A. OLDI9 = DATA_TOL (Left+Right)
B. x in OLDI0_AxP/N = [3:0]

Figure 6-92. OLDI Data Output Jitter

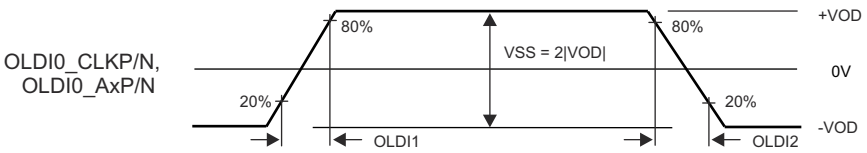

A. x in OLDI0_AxP/N = [3:0]

Figure 6-93. LVDS Output Transition Times

Copyright © 2023 Texas Instruments Incorporated

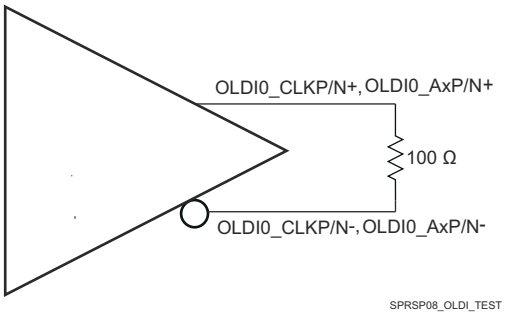

A. x in OLDI0_AxP/N = [3:0]

Figure 6-94. LVDS Output Load

For more information, see section *Display Subsystem (DSS)* in the device TRM.

Copyright © 2023 Texas Instruments Incorporated

6.9.5.20 PCIE

The PCI-Express Subsystem is compliant with the PCI Express Base Specification, revision 3.1. Refer to the specification for timing details.

For more details about features and additional description information on the device Peripheral Component Interconnect Express, see the corresponding sections within Section 5.3, *Signal Descriptions* and Section 7, *Detailed Description*.

6.9.5.21 PRU_ICSSG

The device has integrated three identical PRU_ICSSG subsystems (PRU_ICSSG0, PRU_ICSSG1 and PRU_ICSSG2). The programmable nature of the PRU cores, along with their access to pins, events and all device resources, provides flexibility in implementing fast real-time responses, specialized data handling operations, custom peripheral interfaces, and in offloading tasks from the other processor cores of the device.

For more details about features and additional description information on the device Programmable Real-Time Unit Subsystem and Industrial Communication Subsystem - Gigabit, see the corresponding sections within Section 5.3, *Signal Descriptions* and Section 7, *Detailed Description*.

6.9.5.21.1 Programmable Real-Time Unit (PRU_ICSSG PRU)

Note

The PRU_ICSSG PRU signals have different functionality depending on the mode of operation. The signal naming in this section matches the naming used in the PRU Module Interface section in the device TRM.

Table 6-70 presents the PRU timing conditions.

Table 6-70. PRU_ICSSG PRU Timing Conditions

PARAMETER		MIN	MAX	UNIT
INPUT CONDITIONS				
SR_I	Input slew rate	1.5	3	V/ns
OUTPUT CONDITIONS				
C_L	Output load capacitance	2	30	pF

6.9.5.21.1.1 PRU_ICSSG PRU Direct Input/Output Mode Electrical Data and Timing

6.9.5.21.1.1.1 PRU_ICSSG PRU Switching Characteristics - Direct Output Mode

NO.	PARAMETER		MIN	MAX	UNIT
PRDO1	$t_{sk(GPO-GPO)}$	Skew, GPO to GPO		4	ns

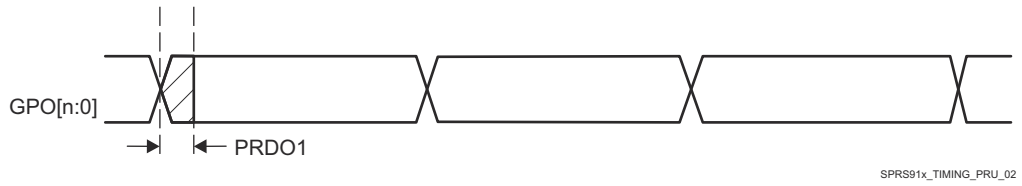

Figure 6-95. PRU_ICSSG PRU Direct Output Timing

A. n in GPO[n:0] = 19.

Copyright © 2023 Texas Instruments Incorporated

6.9.5.21.1.2 PRU_ICSSG PRU Parallel Capture Mode Electrical Data and Timing

6.9.5.21.1.2.1 PRU_ICSSG PRU Timing Requirements - Parallel Capture Mode

See Figure 6-96 and Figure 6-97

NO.			MIN	MAX	UNIT
PRPC1	$t_{c(CLOCK)}$	Cycle time, CLOCKIN	20		ns
PRPC2	$t_{w(CLOCKL)}$	Pulse Duration, CLOCKIN Low	10		ns
PRPC3	$t_{w(CLOCKH)}$	Pulse Duration, CLOCKIN High	10		ns
PRPC4	$t_{su(DATAIN-CLOCK)}$	Setup time, DATAIN valid before CLOCKIN active edge	4		ns
PRPC5	$t_{h(CLOCK-DATAIN)}$	Hold time, DATAIN valid after CLOCKIN active edge	0.6		ns

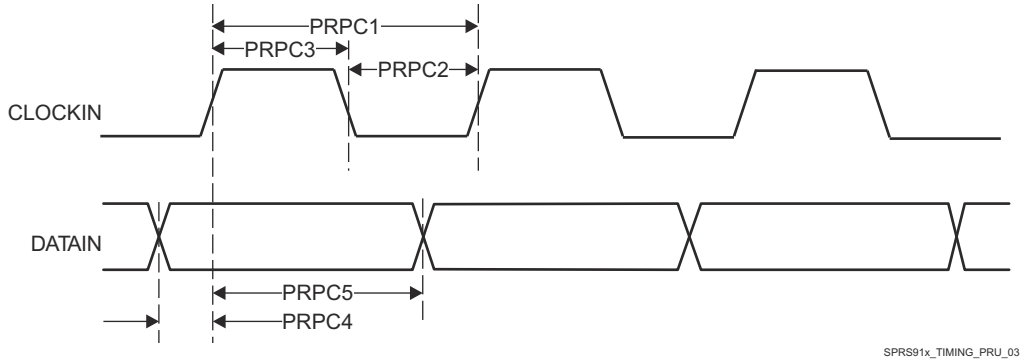

Figure 6-96. PRU_ICSSG PRU Parallel Capture Timing – Rising Edge Mode

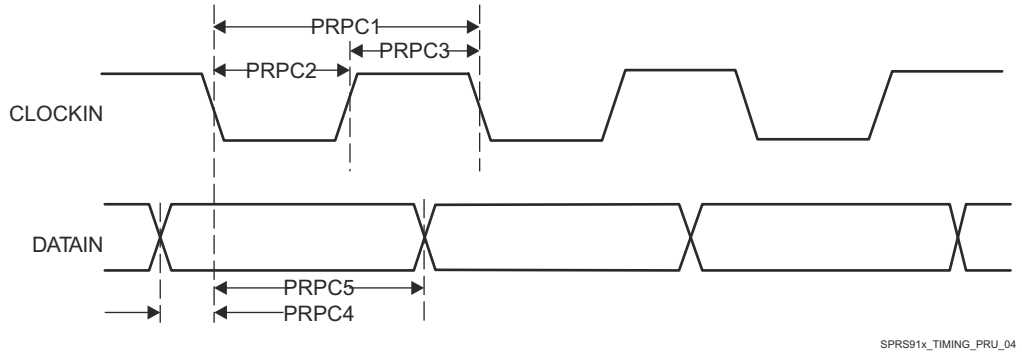

Figure 6-97. PRU_ICSSG PRU Parallel Capture Timing – Falling Edge Mode

6.9.5.21.1.3 PRU_ICSSG PRU Shift Mode Electrical Data and Timing

6.9.5.21.1.3.1 PRU_ICSSG PRU Timing Requirements - Shift In Mode

NO.			MIN	MAX	UNIT
PRSI1	$t_{w(PRU_DATAINL)}$	Pulse Duration, PRU_DATAIN Low	2+2×P (1)		ns
PRSI2	$t_{w(PRU_DATAINH)}$	Pulse Duration, PRU_DATAIN High	2+2×P (1)		ns

(1) P = Internal shift in clock period, defined by PRU0_GPI_DIV0 and PRU0_GPI_DIV1 bit fields in the ICSSG_GPCFGn_REG register.

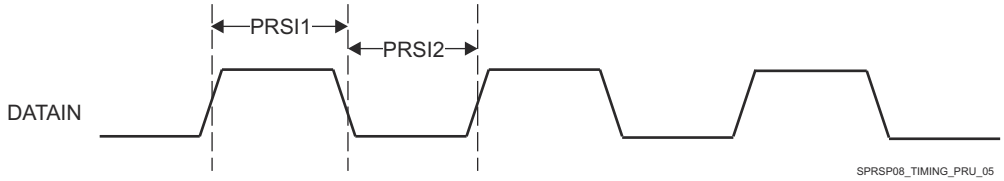

Figure 6-98. PRU_ICSSG PRU Shift In Timing

Copyright © 2023 Texas Instruments Incorporated

6.9.5.21.1.3.2 PRU_ICSSG PRU Switching Characteristics - Shift Out Mode

NO.	PARAMETER		MIN	MAX	UNIT
PRSO1	$t_{c(CLKOUT)}$	Cycle time, CLKOUT	10		ns
PRSO2	$t_{w(CLKOUTL)}$	Pulse Duration, CLKOUT Low	-0.3 + 0.475×P×Z (1) (2)		ns
PRSO3	$t_{w(CLKOUTH)}$	Pulse Duration, CLKOUT High	-0.3 + 0.475×P×Y (1) (3)		ns
PRSO4	$t_{d(CLKOUT-DATAOUT)}$	Delay time, CLKOUT to DATAOUT Valid	-1	4	ns

(1) P = Software programmable shift out clock period, defined by PRU0_GPO_DIV0 and PRU0_GPO_DIV1 bit fields in the GPCFGn register.

(2) The Z parameter is defined as follows: If PRU0_GPI_DIV0 and PRU0_GPI_DIV1 are INTEGERS -or- if PRU0_GPI_DIV0 is a NON-INTEGER and PRU0_GPI_DIV1 is an EVEN INTEGER then, Z equals (PRU0_GPI_DIV0 × PRU0_GPI_DIV1). If PRU0_GPI_DIV0 is a NON-INTEGER and PRU0_GPI_DIV1 is an ODD INTEGER then, Z equals (PRU0_GPI_DIV0 × PRU0_GPI_DIV1 + 0.5). If PRU0_GPI_DIV0 is an INTEGER and PRU0_GPI_DIV1 is a NON-INTEGER then, Z equals (PRU0_GPI_DIV0 × PRU0_GPI_DIV1 + 0.5 × PRU0_GPI_DIV0). If PRU0_GPI_DIV0 and PRU0_GPI_DIV1 are NON-INTEGERS then, Z equals (PRU0_GPI_DIV0 × PRU0_GPI_DIV1 + 0.25 × PRU0_GPI_DIV0).

(3) The Y parameter is defined as follows: If PRU0_GPI_DIV0 and PRU0_GPI_DIV1 are INTEGERS -or- if PRU0_GPI_DIV0 is a NON-INTEGER and PRU0_GPI_DIV1 is an EVEN INTEGER then, Y equals (PRU0_GPI_DIV0 × PRU0_GPI_DIV1). If PRU0_GPI_DIV0 is a NON-INTEGER and PRU0_GPI_DIV1 is an ODD INTEGER then, Y equals (PRU0_GPI_DIV0 × PRU0_GPI_DIV1 - 0.5). If PRU0_GPI_DIV0 is an INTEGER and PRU0_GPI_DIV1 is a NON-INTEGER then, Y equals (PRU0_GPI_DIV0 × PRU0_GPI_DIV1 - 0.5 × PRU0_GPI_DIV0). If PRU0_GPI_DIV0 and PRU0_GPI_DIV1 are NON-INTEGERS then, Y1 equals (PRU0_GPI_DIV0 × PRU0_GPI_DIV1 - 0.25 × PRU0_GPI_DIV0) and Y2 equals (PRU0_GPI_DIV0 × PRU0_GPI_DIV1 + 0.25 × PRU0_GPI_DIV0), where Y1 is the first high pulse and Y2 is the second high pulse.

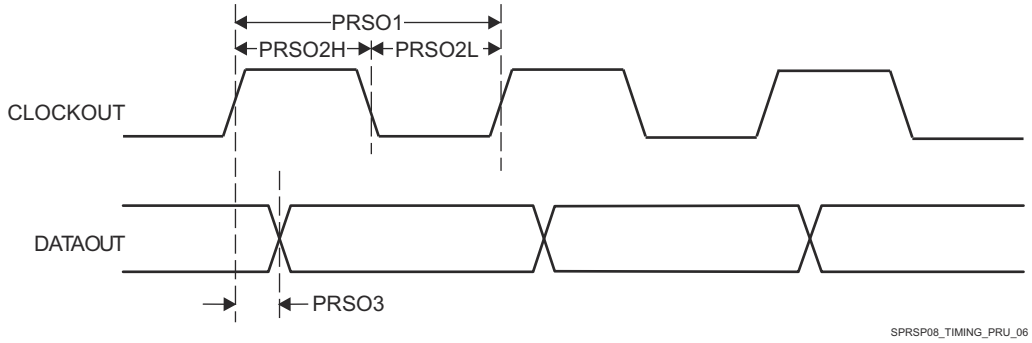

Figure 6-99. PRU_ICSSG PRU Shift Out Timing

6.9.5.21.1.4 PRU_ICSSG PRU Sigma Delta and Peripheral Interface Modes Electrical Data and Timing

Table 6-71 presents PRU Sigma Delta and Peripheral timing conditions.

Table 6-71. PRU_ICSSG PRU Sigma Delta and Peripheral Interface Timing Conditions

PARAMETER		MIN	MAX	UNIT
INPUT CONDITIONS				
SR_I	Input slew rate	1	3	V/ns
OUTPUT CONDITIONS				
C_L	Output load capacitance	2	18	pF

6.9.5.21.1.4.1 PRU_ICSSG PRU Timing Requirements - Sigma Delta Mode

NO.			MIN	MAX	UNIT
PRSD1	$t_{c(SD_CLK)}$	Cycle time, SD_CLK	40		ns
PRSD2L	$t_{w(SD_CLKL)}$	Pulse Duration, SD_CLK Low	20		ns
PRSD2H	$t_{w(SD_CLKH)}$	Pulse Duration, SD_CLK High	20		ns
PRSD3	$t_{su(SD_DATA-SD_CLK)}$	Setup time, SD_DATA valid before SD_CLK active edge	10		ns

Copyright © 2023 Texas Instruments Incorporated

NO.			MIN	MAX	UNIT
PRSD4	$t_{h(SD_CLK-SD_DATA)}$	Hold time, SD_DATA valid before SD_CLK active edge	5		ns

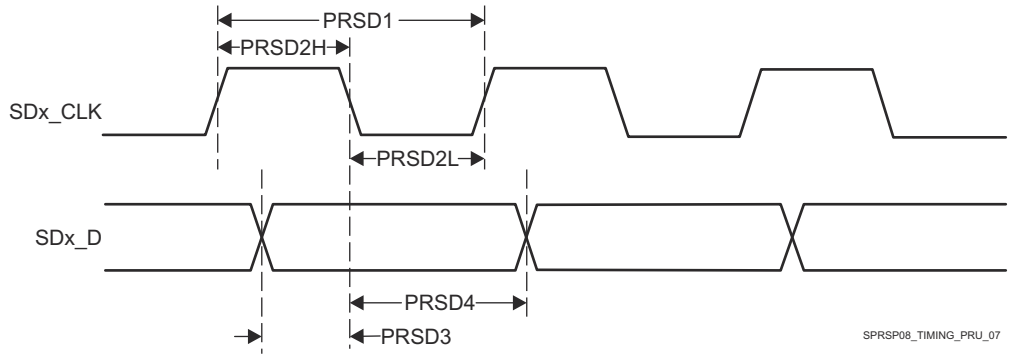

Figure 6-100. PRU_ICSSG PRU SD_CLK Falling Active Edge

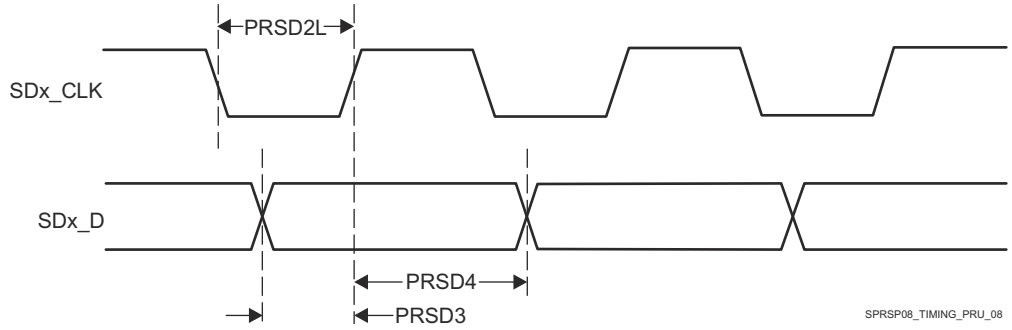

Figure 6-101. PRU_ICSSG PRU SD_CLK Rising Active Edge

6.9.5.21.1.4.2 PRU_ICSSG PRU Timing Requirements - Peripheral Interface Mode

NO.	PARAMETER	DESCRIPTION	MIN	MAX	UNIT
PRPIF1	$t_{w(PIF_DATA_INH)}$	Pulse Duration, PIF_DATA_IN High	2 + 0.475× (4×P) (1)		ns
PRPIF2	$t_{w(PIF_DATA_INL)}$	Pulse Duration, PIF_DATA_IN Low	2 + 0.475× (4×P) (1)		ns

(1) P = 1x (or TX) clock period, defined by TX_DIV_FACTOR and TX_DIV_FACTOR_FRAC in the CFG_ED_Pn_TXCFG register.

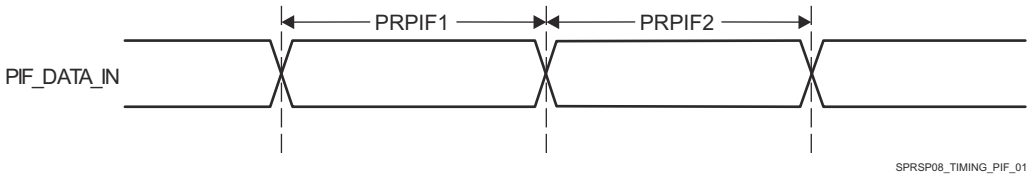

Figure 6-102. PRU_ICSSG PRU Peripheral Interface Timing

6.9.5.21.1.4.3 PRU_ICSSG PRU Switching Characteristics - Peripheral Interface Mode

NO.	DESCRIPTION		MIN	MAX	UNIT
PRPIF1	$t_{c(PIF_CLK)}$	Cycle time, PIF_CLK	30		ns
PRPIF2H	$t_{w(PIF_DATA_INH)}$	Pulse Duration, PIF_CLK High	0 + 0.475×P (1)		ns
PRPIF2L	$t_{w(PIF_DATA_INL)}$	Pulse Duration, PIF_CLK Low	0 + 0.475×P (1)		ns
PRPIF3	$t_{d(PIF_CLK-PIF_DATA_OUT)}$	Delay time, PIF_CLK fall to PIF_DATA_OUT	-5	5	ns

Copyright © 2023 Texas Instruments Incorporated

NO.		DESCRIPTION	MIN	MAX	UNIT
PRPIF4	$t_{d(PIF_CLK-PIF_DATA_EN)}$	Delay time, PIF_CLK fall to PIF_DATA_EN	-5	5	ns

(1) P = 1x (or TX) clock period, defined by TX_DIV_FACTOR and TX_DIV_FACTOR_FRAC in the ICSSG_PRUn_ED_TX_CFG_REG, where n = 0 or 1.

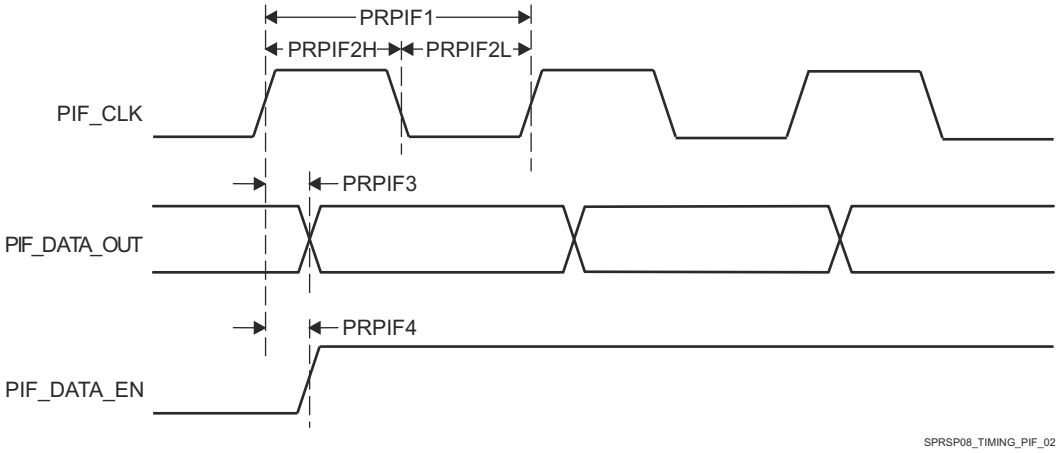

Figure 6-103. PRU_ICSSG PRU Peripheral Interface Switching Characteristics

6.9.5.21.2 PRU_ICSSG Pulse Width Modulation (PWM)

6.9.5.21.2.1 PRU_ICSSG PWM Electrical Data and Timing

Table 6-72 presents the PRU_ICSSG PWM timing conditions.

Table 6-72. PRU_ICSSG PWM Timing Conditions

PARAMETER		MIN	MAX	UNIT
INPUT CONDITIONS				
SR_I	Input slew rate	1	4	V/ns
OUTPUT CONDITIONS				
C_L	Output load capacitance	2	7	pF

6.9.5.21.2.1.1 PRU_ICSSG PWM Switching Characteristics

NO.	PARAMETER	DESCRIPTION	MIN	MAX	UNIT
PRPWM1	$t_{sk(PWM_A/B)}$	PWM_A/B skew		5	ns

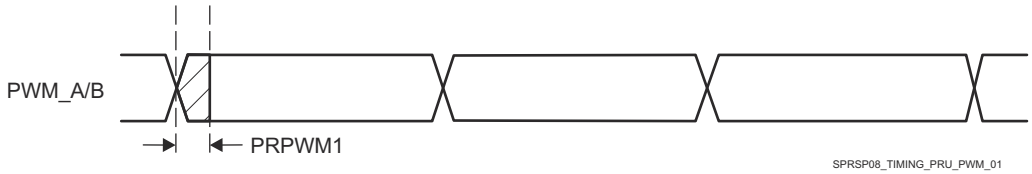

Figure 6-104. PRU_ICSSG PRU PWM Timing

6.9.5.21.3 PRU_ICSSG Industrial Ethernet Peripheral (PRU_ICSSG IEP)

6.9.5.21.3.1 PRU_ICSSG IEP Electrical Data and Timing

6.9.5.21.3.1.1 PRU_ICSSG IEP Timing Requirements - Input Validated with SYNCx

NO.			MIN	MAX	UNIT
PRIEP1	$t_{w(EDC_SYNCx_OUTL)}$	Pulse Duration, EDC_SYNCx_OUT Low	-2+20×P (1)		ns
PRIEP2	$t_{w(EDC_SYNCx_OUTH)}$	Pulse Duration, EDC_SYNCx_OUT High	-2+20×P (1)		ns

Copyright © 2023 Texas Instruments Incorporated

NO.			MIN	MAX	UNIT
PRIEP3	$t_{su(EDIO_DATA_IN-EDC_SYNCx_OUT)}$	Setup time, EDIO_DATA_IN valid before EDC_SYNCx_OUT active edge	20		ns
PRIEP4	$t_{h(EDC_SYNCx_OUT-EDIO_DATA_IN)}$	Hold time, EDIO_DATA_IN valid after EDC_SYNCx_OUT active edge	20		ns

(1) P = PRU-ICSS IEP clock source period.

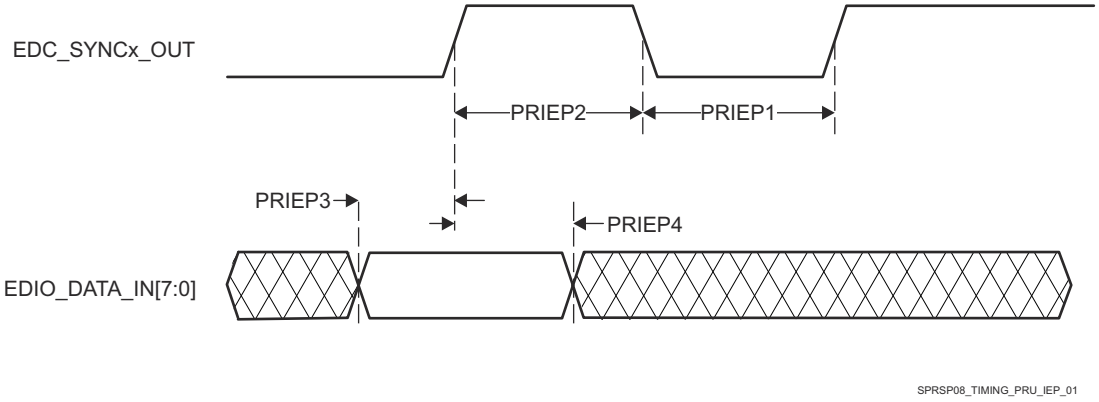

Figure 6-105. PRU_ICSSG PRU IEP SYNCx Timing

6.9.5.21.3.1.2 PRU_ICSSG IEP Timing Requirements - Digital IOs

NO.			MIN	MAX	UNIT
IEPIO1	$t_{w(EDIO_OUTVALIDL)}$	Pulse Duration, EDIO_OUTVALID Low	-2+14×P (1)		ns
IEPIO2	$t_{w(EDIO_OUTVALIDH)}$	Pulse Duration, EDIO_OUTVALID High	-2+32×P (1)		ns
IEPIO3	$t_{d(EDIO_OUTVALID-EDIO_DATA_OUT)}$	Delay time, EDIO_OUTVALID to EDIO_DATA_OUT	0	0+18×P (1)	ns
IEPIO4	$t_{sk(EDIO_DATA_OUT)}$	EDIO_DATA_OUT skew	5		ns

(1) P = PRU-ICSS IEP clock source period.

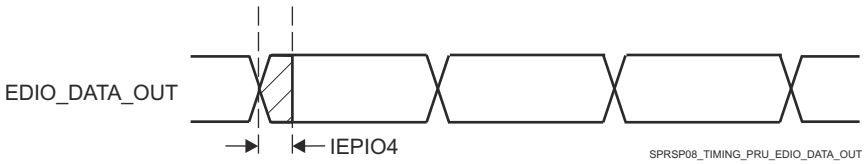

Figure 6-106. PRU_ICSSG PRU IEP Digital IOs Timing

6.9.5.21.3.1.3 PRU_ICSSG IEP Timing Requirements - LATCHx_IN

NO.			MIN	MAX	UNIT
PRLA1	$t_{w(EDC_LATCHx_INL)}$	Pulse Duration, EDC_LATCHx_IN Low	2+3×P(1)		ns
PRLA2	$t_{w(EDC_LATCHx_INH)}$	Pulse Duration, EDC_LATCHx_IN High	2+3×P (1)		ns

(1) P = PRU-ICSS IEP clock source period.

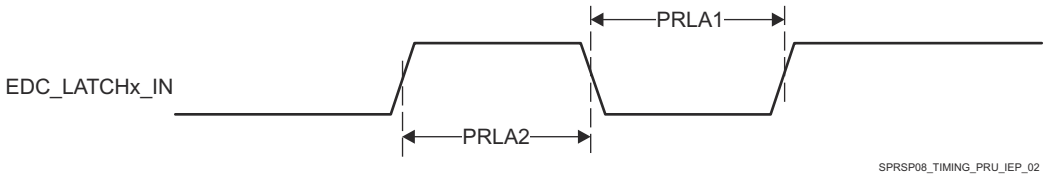

Figure 6-107. PRU_ICSSG PRU IEP LATCHx_IN Timing

6.9.5.21.4 PRU_ICSSG Universal Asynchronous Receiver Transmitter (PRU-ICSS UART)

6.9.5.21.4.1 PRU_ICSSG UART Electrical Data and Timing

Table 6-73 presents the PRU_ICSSG UART timing conditions.

Table 6-73. PRU_ICSSG UART Timing Conditions

PARAMETER		MIN	MAX	UNIT
INPUT CONDITIONS				
SR_I	Input slew rate	0.01	0.33	V/ns
OUTPUT CONDITIONS				
C_L	Output load capacitance	1	30	pF

6.9.5.21.4.1.1 PRU_ICSSG UART Timing Requirements

NO.	PARAMETER	DESCRIPTION	MIN	MAX	UNIT
PRUR1H	$t_{w(RXH)}$	Pulse Duration, Receive start, stop, data bit High	2+0.95*U (1)		ns
PRUR1L	$t_{w(RXL)}$	Pulse Duration, Receive start, stop, data bit Low	2+0.95*U (1)		ns

(1) U = UART baud time = 1/programmed baud rate.

6.9.5.21.4.1.2 PRU_ICSSG UART Switching Characteristics

NO.	PARAMETER	DESCRIPTION	MIN	MAX	UNIT
	f(baud)	Programmable baud rate		12	MHz
PRUR3L	$t_{w(TXH)}$	Pulse Duration, Transmit start, stop, data bit High	-2+U(1)		ns
PRUR3H	$t_{w(TXL)}$	Pulse Duration, Transmit start, stop, data bit Low	-2+U(1)		ns

(1) U = UART baud time = 1/programmed baud rate.

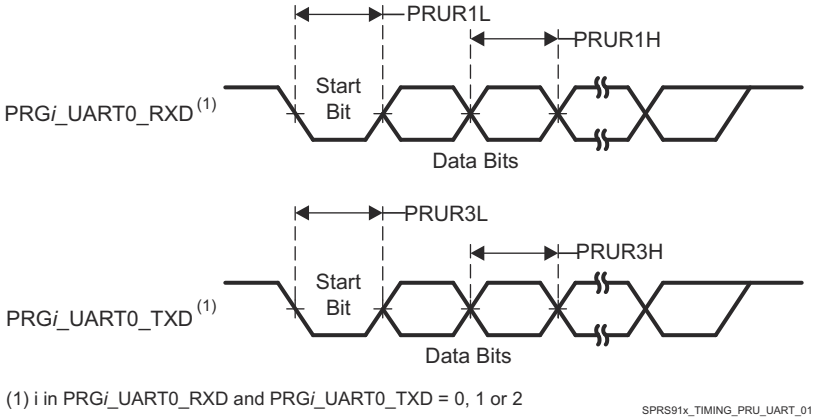

Figure 6-108. PRU_ICSSG UART Timing

6.9.5.21.5 PRU_ICSSG Enhanced Capture Peripheral (PRU-ICSS ECAP)

6.9.5.21.5.1 PRU_ICSSG ECAP Electrical Data and Timing

Table 6-74 presents ECAP timing conditions.

Table 6-74. PRU_ICSSG ECAP Timing Conditions

PARAMETER		MIN	MAX	UNIT
INPUT CONDITIONS				
SR_I	Input slew rate	1	3	V/ns
OUTPUT CONDITIONS				

Copyright © 2023 Texas Instruments Incorporated

Table 6-74. PRU_ICSSG ECAP Timing Conditions (continued)

PARAMETER		MIN	MAX	UNIT
C_L	Output load capacitance	2	7	pF

6.9.5.21.5.1.1 PRU_ICSSG ECAP Timing Requirements

NO.	PARAMETER	DESCRIPTION	MIN	MAX	UNIT
PREP1	$t_{w(CAP)}$	Pulse Duration, Capture input (asynchronous)	2+2×P (1)		ns
PREP2	$t_{w(SYNCI)}$	Pulse Duration, Sync input (asynchronous)	2+2×P (1)		ns

(1) P = core_clk period

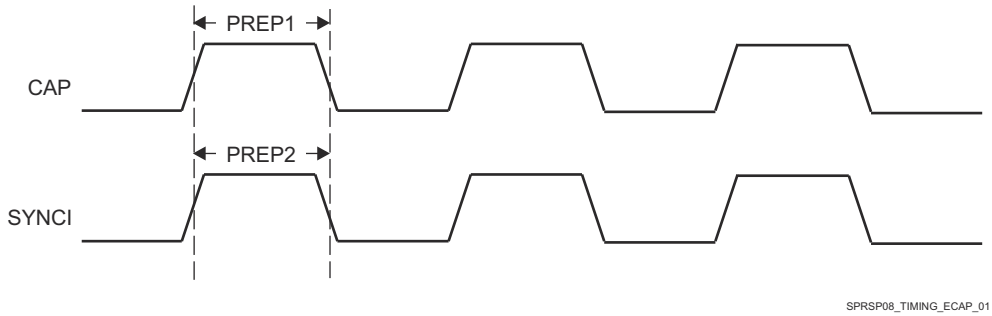

Figure 6-109. PRU_ICSSG ECAP Timing

6.9.5.21.5.1.2 PRU_ICSSG ECAP Switching Characteristics

NO.	PARAMETER	DESCRIPTION	MIN	MAX	UNIT
PREP3	$t_{w(APWM)}$	Pulse Duration, APWM high/low	-2+2×P (1)		ns
PREP4	$t_{w(SYNCO)}$	Pulse Duration, SYNCO (asynchronous)	-2+P (1)		ns

(1) P = CORE_CLK period in ns

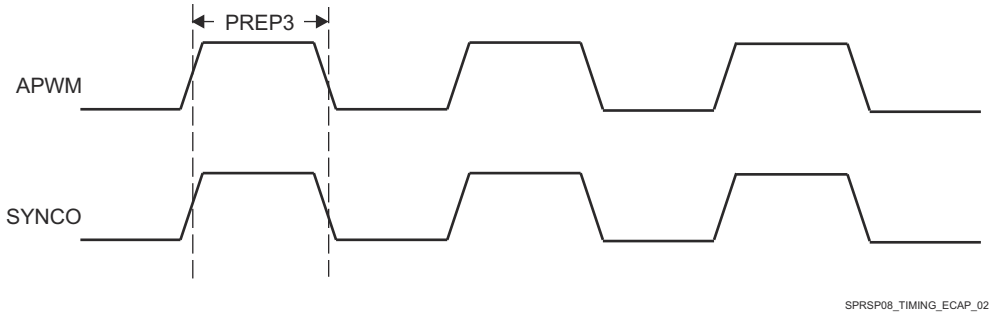

Figure 6-110. PRU_ICSSG ECAP Switching Characteristics

6.9.5.21.6 PRU_ICSSG RGMII, MII_RT, and Switch

6.9.5.21.6.1 PRU_ICSSG MDIO Electrical Data and Timing

Table 6-75 presents MDIO timing conditions.

Table 6-75. PRU_ICSSG MDIO Timing Conditions

PARAMETER		MIN	MAX	UNIT
INPUT CONDITIONS				
SR_I	Input slew rate	0.9	3.6	V/ns
OUTPUT CONDITIONS				
C_L	Output load capacitance	10	470	pF

6.9.5.21.6.1.1 PRU_ICSSG MDIO Timing Requirements

NO.	PARAMETER	DESCRIPTION	MIN	MAX	UNIT
PRMDI1	$t_{su(MDIO-MDC)}$	Setup time, MDIO valid before MDC High	90		ns
PRMDI2	$t_{h(MDC-MDIO)}$	Hold time, MDIO valid after MDC High	0		ns

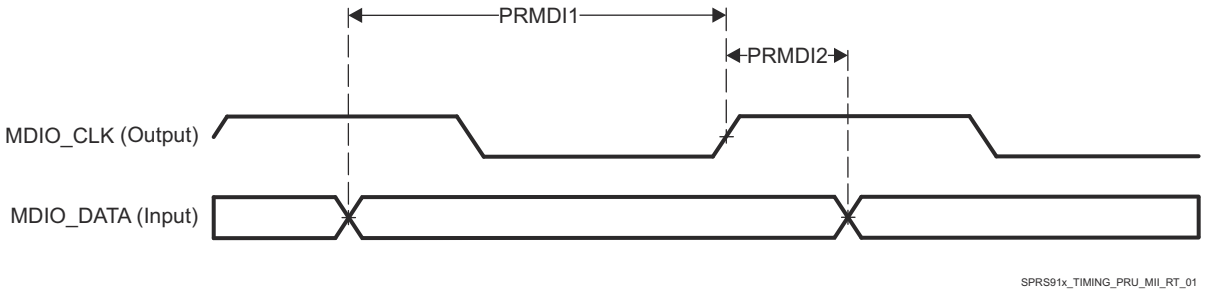

Figure 6-111. PRU_ICSSG MDIO_DATA Timing – Input Mode

Copyright © 2023 Texas Instruments Incorporated

6.9.5.21.6.1.2 PRU_ICSSG MDIO Switching Characteristics - MDIO_CLK

NO.	PARAMETER	DESCRIPTION	MIN	MAX	UNIT
PRMC1	$t_{c(MDC)}$	Cycle time, MDC	400		ns
PRMC2	$t_{w(MDCH)}$	Pulse Duration, MDC High	160		ns
PRMC3	$t_{w(MDCL)}$	Pulse Duration, MDC Low	160		ns

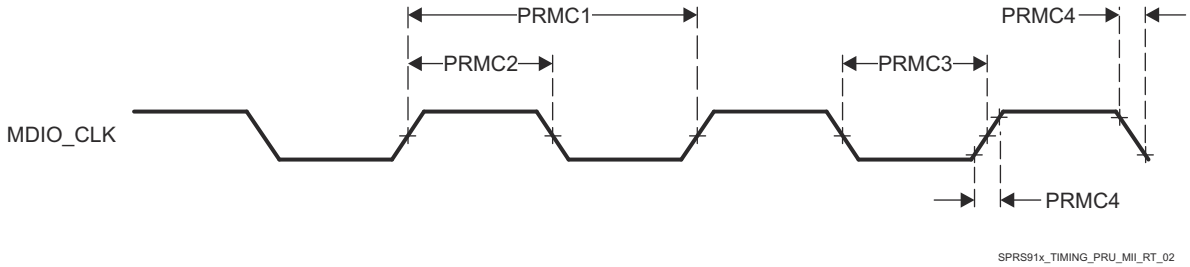

Figure 6-112. PRU_ICSSG MDIO_CLK Switching Characteristics

6.9.5.21.6.1.3 PRU_ICSSG MDIO Switching Characteristics – MDIO_DATA

NO.	PARAMETER	DESCRIPTION	MIN	MAX	UNIT
PRMDO1	$t_{d(MDC-MDIO)}$	Delay time, MDC low to MDIO valid	-150	150	MHz

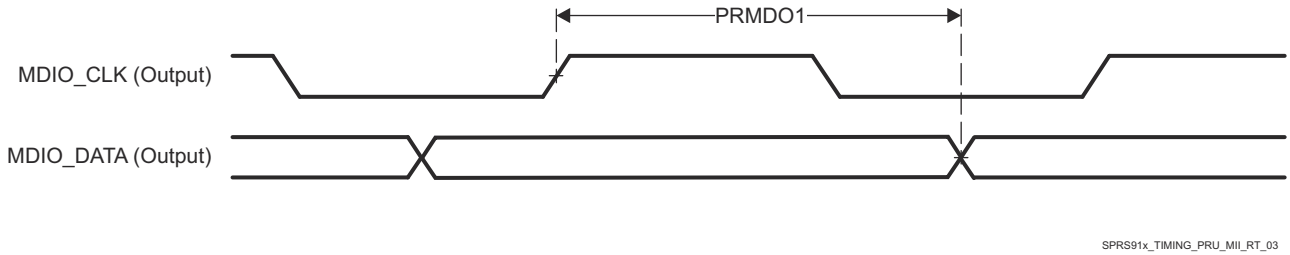

Figure 6-113. PRU_ICSSG MDIO_DATA Switching Characteristics

6.9.5.21.6.2 PRU_ICSSG RGMII Electrical Data and Timing

Table 6-76 presents the PRU_ICSSG RGMII timing conditions.

Table 6-76. PRU_ICSSG RGMII Timing Conditions

PARAMETER		MODE	MIN	MAX	UNIT
INPUT CONDITIONS					
SR_I	Input slew rate		2.65	5	V/ns
OUTPUT CONDITIONS					
C_L	Output load capacitance		2	20	pF
PCB Connectivity Requirements					
$t_{d(Trace\ Mismatch\ Delay)}$	Propagation delay mismatch across all traces	RXC, RD[3:0],RX_CTL		50	ps
		TXC, TD[3:0],TX_CTL		50	ps

6.9.5.21.6.2.1 PRU_ICSSG RGMII Timing Requirements - RGMII_RXC

NO.			MODE	MIN	MAX	UNIT
PRRG1	$t_{c(RXC)}$	Cycle time, RXC	10 Mbps	360	440	ns
			100 Mbps	36	44	ns
			1000 Mbps	7.2	8.8	ns

Copyright © 2023 Texas Instruments Incorporated

NO.			MODE	MIN	MAX	UNIT
PRRG2	$t_{w(RXCH)}$	Pulse duration, RXC high	10 Mbps	160	240	ns
			100 Mbps	16	24	ns
			1000 Mbps	3.6	4.4	ns
PRRG3	$t_{w(RXCL)}$	Pulse duration, RXC low	10 Mbps	160	240	ns
			100 Mbps	16	24	ns
			1000 Mbps	3.6	4.4	ns

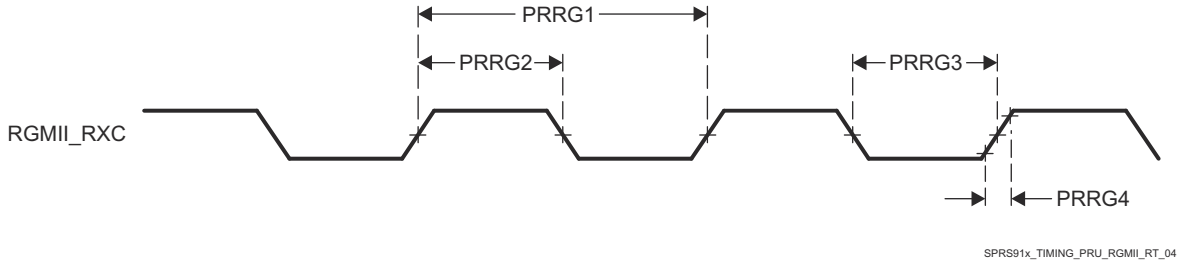

Figure 6-114. PRU_ICSSG RGMII_RCLK Timing Requirements

6.9.5.21.6.2.2 PRU_ICSSG RGMII Timing Requirements - RGMII_RD[3:0] and RGMII_RX_CTL

NO.	PARAMETER	DESCRIPTION	MODE	MIN	MAX	UNIT
PRRG5	$t_{su(RD-RXC)}$	Setup time, RD[3:0] valid before RXC high/low	10 Mbps 100 Mbps 1000 Mbps	1		ns
	$t_{su(RX_CTL-RXC)}$	Setup time, RX_CTL valid before RXC high/low	10 Mbps 100 Mbps 1000 Mbps	1		ns
PRRG6	$t_{h(RXC-RD)}$	Hold time, RD[3:0] valid after RXC high/low	10 Mbps 100 Mbps 1000 Mbps	1.15		ns
	$t_{h(RXC-RX_CTL)}$	Hold time, RX_CTL valid after RXC high/low	10 Mbps 100 Mbps 1000 Mbps	1.15		ns

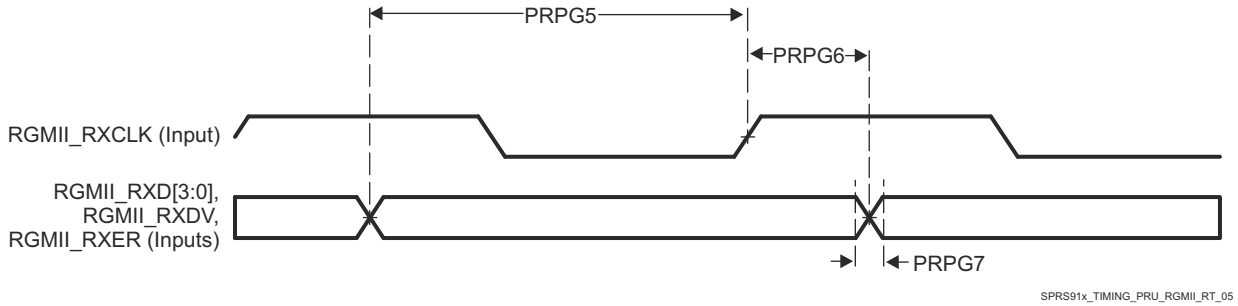

Figure 6-115. PRU_ICSSG RGMII_RD[3:0] and RGMII_RX_CTL Timing Requirements

6.9.5.21.6.2.3 PRU_ICSSG RGMII Switching Characteristics - RGMII_TXC

NO.	PARAMETER	DESCRIPTION	MODE	MIN	MAX	UNIT
PRRG8	$t_{c(TXC)}$	Cycle time, TXC	10 Mbps	360	440	ns
			100 Mbps	36	44	ns
			1000 Mbps	7.2	8.8	ns
PRRG9	$t_{w(TXCH)}$	Pulse duration, TXC high	10 Mbps	160	240	ns
			100 Mbps	16	24	ns
			1000 Mbps	3.6	4.4	ns

Copyright © 2023 Texas Instruments Incorporated

NO.	PARAMETER	DESCRIPTION	MODE	MIN	MAX	UNIT
PRRG10	$t_{w(TXCL)}$	Pulse duration, TXC low	10 Mbps	160	240	ns
			100 Mbps	16	24	ns
			1000 Mbps	3.6	4.4	ns

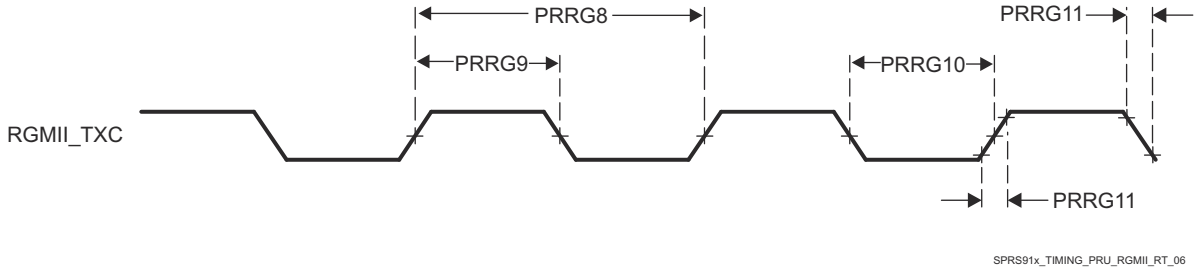

Figure 6-116. PRU_ICSSG RGMII_TXC Switching Characteristics

6.9.5.21.6.2.4 PRU_ICSSG RGMII Switching Characteristics - RGMII_TD[3:0] and RGMII_TX_CTL

NO.	PARAMETER	DESCRIPTION	MODE	MIN	TYP	MAX	UNIT
PRRG12	$t_{osu(TD-TXC)}$	Output setup time, RGMII[x]_TD[3:0] valid to RGMII[x]_TXC high/low	10 Mbps 100 Mbps	1.2			ns
			1000 Mbps	1.05(1)			ns
	$t_{osu(TX_CTL-TXC)}$	Output setup time, RGMII[x]_TX_CTL valid to RGMII[x]_TXC high/low	10 Mbps 100 Mbps	1.2			ns
			1000 Mbps	1.05(1)			ns
PRRG13	$t_{oh(TD-TXC)}$	Output hold time, RGMII[x]_TD[3:0] valid after RGMII[x]_TXC high/low	10 Mbps 100 Mbps	1.2			ns
			1000 Mbps	1.05(1)			ns
	$t_{oh(TX_CTL-TXC)}$	Output hold time, RGMII[x]_TX_CTL valid after RGMII[x]_TXC high/low	10 Mbps 100 Mbps	1.2			ns
			1000 Mbps	1.05(1)			ns

(1) 1000Mbps operation requires that the 4 data pins (RGMII[x]_TD[3:0]) and RGMII[x]_TX_CTL have their board propagation delays matched to within 50 ps of RGMII[x]_TXC.

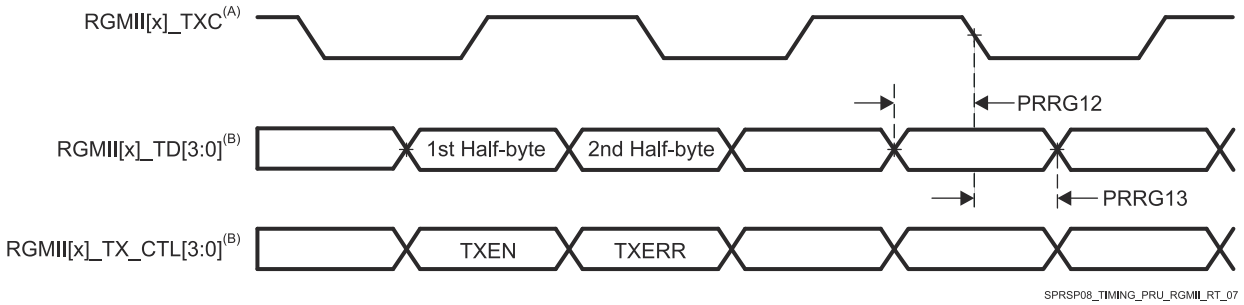

A. TXC is delayed internally before being driven to the RGMII[x]_TXC pin. This internal delay is always enabled.

B. Data and control information is received using both edges of the clocks. RGMII_TD[3:0] carries data bits 3-0 on the rising edge of RGMII_TXC and data bits 7-4 on the falling edge of RGMII_TXC. Similarly, RGMII_TX_CTL carries TXDV on rising edge of RGMII_TXC and RTXERR on falling edge of RGMII_TXC.

Figure 6-117. PRU_ICSSG Transmit Interface Timing RGMII Mode

Copyright © 2023 Texas Instruments Incorporated

6.9.5.21.6.3 PRU_ICSSG MII_RT Electrical Data and Timing

Note

The PRU_ICSSG are contains a second layer of multiplexing to enable additional functionality (including MII functionality) on the PRU GPO and GPI signals. This internal wrapper multiplexing is described in the *Programmable Real-Time Unit Subsystem and Industrial Communication Subsystem - Gigabit (PRU_ICSSG)* section in *Peripherals* chapter in the device TRM.

Note

In order to ensure the MII_G_RT I/O timing values published in the device data sheet, the PRU_ICSSG ICSSGn_CORE_CLK (where n = 0 to 2) core clock must be configured for 200 MHz, 225 MHz, or 250 MHz and the TX_CLK_DELAYn (where n = 0 or 1) bit field in the ICSSG_TXCFG0/1 register must be set to 0h (default value).

Table 6-77 presents PRU_ICSSG MII timing conditions.

Table 6-77. PRU_ICSSG MII Timing Conditions

PARAMETER		MIN	MAX	UNIT
INPUT CONDITIONS				
SR_I	Input slew rate	0.9	3.6	V/ns
OUTPUT CONDITIONS				
C_L	Output load capacitance	2	20	pF

6.9.5.21.6.3.1 PRU_ICSSG MII_RT Timing Requirements – MII_RX_CLK

NO.	PARAMETER	DESCRIPTION	MODE	MIN	MAX	UNIT
PMIR1	$t_{c(RX_CLK)}$	Cycle time, RX_CLK	10 Mbps	399.96	400.04	ns
			100 Mbps	39.996	40.004	ns
PMIR2	$t_{w(RX_CLKH)}$	Pulse Duration, RX_CLK High	10 Mbps	140	260	ns
			100 Mbps	14	26	ns
PMIR3	$t_{w(RX_CLKL)}$	Pulse Duration, RX_CLK Low	10 Mbps	140	260	ns
			100 Mbps	14	26	ns

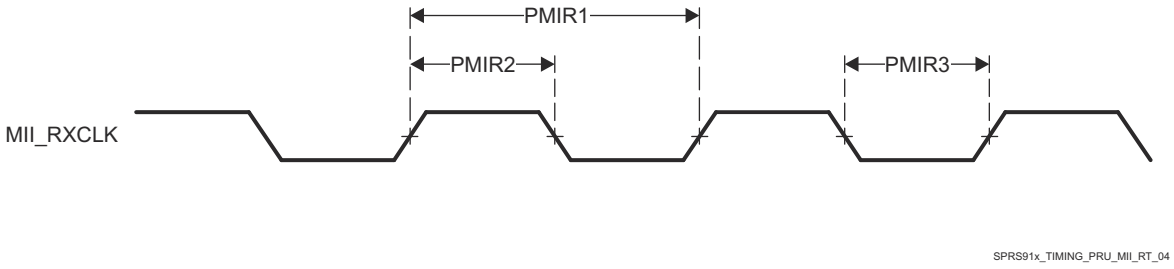

Figure 6-118. PRU_ICSSG MII_RXCLK Timing

Copyright © 2023 Texas Instruments Incorporated

6.9.5.21.6.3.2 PRU_ICSSG MII_RT Timing Requirements – MII_RXD[3:0], MII_RX_DV, and MII_RX_ER

NO.	PARAMETER	DESCRIPTION	MODE	MIN	MAX	UNIT
PMIR4	$t_{su(RXD-RX_CLK)}$	Setup time, RXD[3:0] valid before RX_CLK	10 Mbps	8		ns
	$t_{su(RX_DV-RX_CLK)}$	Setup time, RX_DV valid before RX_CLK		8		ns
	$t_{su(RX_ER-RX_CLK)}$	Setup time, RX_ER valid before RX_CLK		8		ns
	$t_{su(RXD-RX_CLK)}$	Setup time, RXD[3:0] valid before RX_CLK	100 Mbps	8		ns
	$t_{su(RX_DV-RX_CLK)}$	Setup time, RX_DV valid before RX_CLK		8		ns
	$t_{su(RX_ER-RX_CLK)}$	Setup time, RX_ER valid before RX_CLK		8		ns
PMIR5	$t_{h(RX_CLK-RXD)}$	Hold time, RXD[3:0] valid after RX_CLK	10 Mbps	8		ns
	$t_{h(RX_CLK-RX_DV)}$	Hold time, RX_DV valid after RX_CLK		8		ns
	$t_{h(RX_CLK-RX_ER)}$	Hold time, RX_ER valid after RX_CLK		8		ns
	$t_{h(RX_CLK-RXD)}$	Hold time, RXD[3:0] valid after RX_CLK	100 Mbps	8		ns
	$t_{h(RX_CLK-RX_DV)}$	Hold time, RX_DV valid after RX_CLK		8		ns
	$t_{h(RX_CLK-RX_ER)}$	Hold time, RX_ER valid after RX_CLK		8		ns

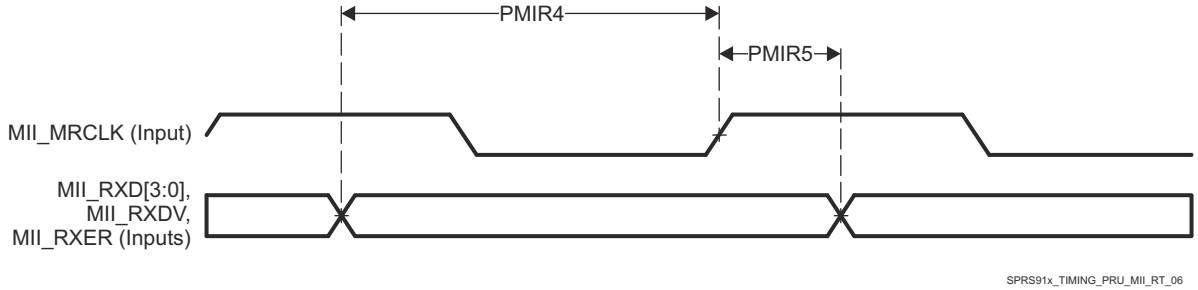

Figure 6-119. PRU_ICSSG MII_RXD[3:0], MII_RXDV, and MII_RXER Timing

6.9.5.21.6.3.3 PRU_ICSSG MII_RT Switching Characteristics – MII_TX_CLK

NO.	PARAMETER	DESCRIPTION	MODE	MIN	MAX	UNIT
PMIT1	$t_{c(TX_CLK)}$	Cycle time, TX_CLK	10 Mbps	399.96	400.04	ns
			100 Mbps	39.996	40.004	ns
PMIT2	$t_{w(TX_CLKH)}$	Pulse Duration, TX_CLK High	10 Mbps	140	260	ns
			100 Mbps	14	26	ns
PMIT3	$t_{w(TX_CLKL)}$	Pulse Duration, TX_CLK Low	10 Mbps	140	260	ns
			100 Mbps	14	26	ns

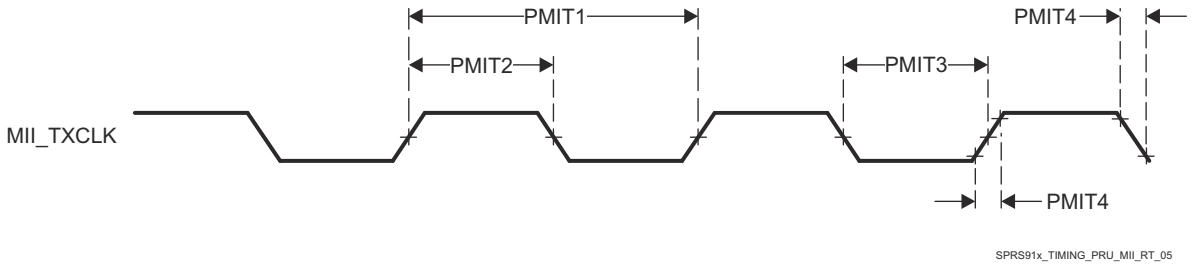

Figure 6-120. PRU_ICSSG MII_TX_CLK Switching Characteristics

Copyright © 2023 Texas Instruments Incorporated

6.9.5.21.6.3.4 PRU_ICSSG MII_RT Switching Characteristics – MII_TXD[3:0] and MII_TXEN

NO.	PARAMETER	DESCRIPTION	MODE	MIN	MAX	UNIT
PMIT5	$t_{d(TX_CLK-TXD)}$	Delay time, TX_CLK High to TXD[3:0] valid	10 Mbps	0	25	ns
	$t_{d(TX_CLK-TX_EN)}$	Delay time, TX_CLK to TX_EN valid		0	25	ns
	$t_{d(TX_CLK-TXD)}$	Delay time, TX_CLK High to TXD[3:0] valid	100 Mbps	0	25	ns
	$t_{d(TX_CLK-TX_EN)}$	Delay time, TX_CLK to TX_EN valid		0	25	ns

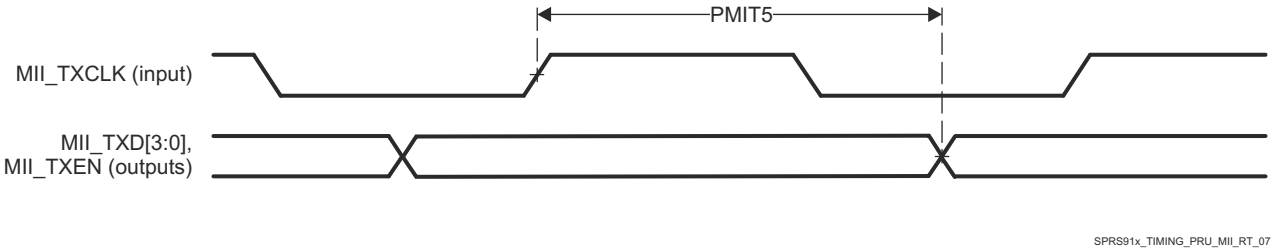

Figure 6-121. PRU_ICSSG MII_TXD[3:0], MII_TXEN Timing

For more information, see section *Programmable Real-Time Unit Subsystem and Industrial Communication Subsystem - Gigabit (PRU_ICSSG)* in the device TRM.

6.9.5.22 Timers

For more details about features and additional description information on the device Timers, see the corresponding sections within Section 5.3, *Signal Descriptions* and Section 7, *Detailed Description*.

Section 6.9.5.22.1, Section 6.9.5.22.2 and Figure 6-122 present timings and switching characteristics of the Timers.

6.9.5.22.1 Timing Requirements for Timers

NO.	PARAMETER	DESCRIPTION	MODE	MIN	MAX	UNIT
T1	$t_{w(TINPH)}$	Pulse duration, high	CAPTURE	5 + 4P(1)		ns
T2	$t_{w(TINPL)}$	Pulse duration, low	CAPTURE	5 + 4P(1)		ns

(1) P = functional clock period in ns.

6.9.5.22.2 Switching Characteristics for Timers

NO.	PARAMETER	DESCRIPTION	MODE	MIN	MAX	UNIT
T3	$t_{w(TOUTH)}$	Pulse duration, high	PWM	-3 + 4P(1)		ns
T4	$t_{w(TOUTL)}$	Pulse duration, low	PWM	-3 + 4P(1)		ns

(1) P = functional clock period in ns.

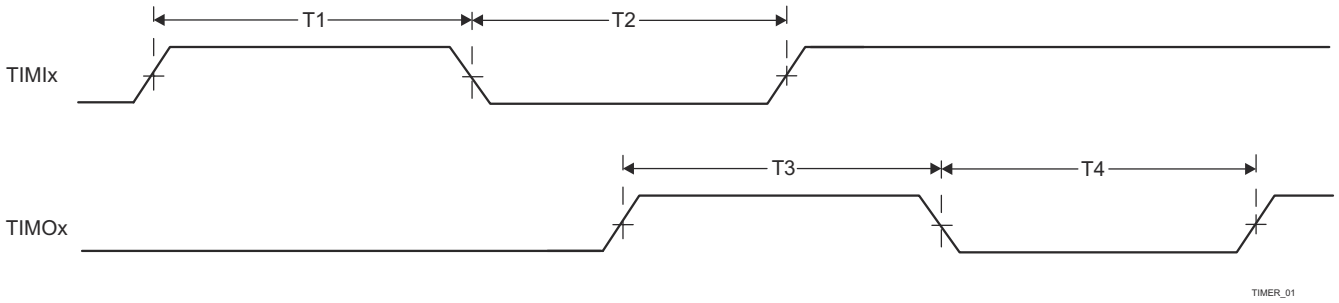

Figure 6-122. Timer Timing

For more information, see section *Timers* in the device TRM.

Copyright © 2023 Texas Instruments Incorporated

6.9.5.23 UART

For more details about features and additional description information on the device Universal Asynchronous Receiver Transmitter, see the corresponding sections within Section 5.3, *Signal Descriptions* and Section 7, *Detailed Description*.

Section 6.9.5.23.1, Section 6.9.5.23.2, and Figure 6-123 present Timing Requirements and Switching Characteristics for UART interface.

6.9.5.23.1 Timing Requirements for UART

NO.	PARAMETER	DESCRIPTION	MIN	MAX	UNIT
4	$t_{w(RX)}$	Pulse width, receive data bit, 15/30 pF high or low	0.95U(1)	1.05U(1)	ns
5	$t_{w(CTS)}$	Pulse width, receive start bit, 15/30 pF high or low	0.95U(1)	1.05U(1)	ns
	$t_{d(RTS-TX)}$	Delay time, transmit start bit to transmit data	P(2)		ns
	$t_{d(CTS-TX)}$	Delay time, receive start bit to transmit data	P(2)		ns

(1) U = UART baud time = 1/Programmed baud rate
(2) P = Clock period of the reference clock (FCLK, usually 48 MHz or 192 MHz)

6.9.5.23.2 Switching Characteristics Over Recommended Operating Conditions for UART

NO.	PARAMETER	DESCRIPTION	MODE	MIN	MAX	UNIT
	$f_{(baud)}$	Maximum programmable baud rate	15 pF		12	MHz
			30 pF		0.115	
2	$t_{w(TX)}$	Pulse width, transmit data bit, 15/30 pF high or low		U - 2(1)	U + 2(1)	ns
3	$t_{w(RTS)}$	Pulse width, transmit start bit, 15/30 pF high or low		U - 2(1)	U + 2(1)	ns

(1) U = UART baud time = 1/Programmed baud rate

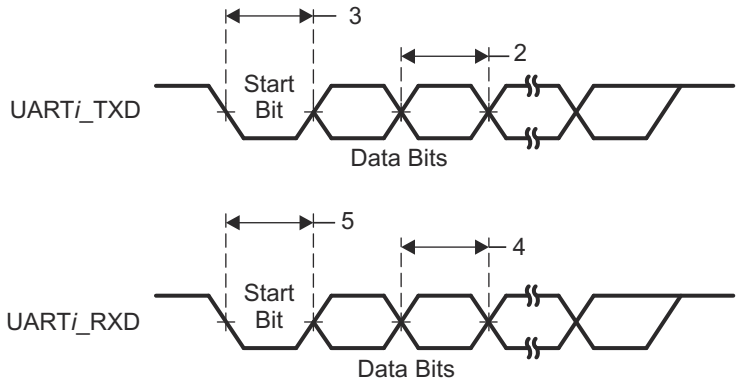

Figure 6-123. UART Timing

For more information, see section *Universal Asynchronous Receiver/Transmitter (UART)* in the device TRM.

6.9.5.24 USB

The USB 2.0 subsystem is compliant with the Universal Serial Bus (USB) Specification, revision 2.0. Refer to the specification for timing details.

The USB 3.1 GEN1 Dual-Role Device Subsystem is compliant with the Universal Serial Bus (USB) 3.1 Specification, revision 1.0. Refer to the specification for timing details.

For more details about features and additional description information on the device Universal Serial Bus Subsystem (USB), see the corresponding sections within Section 5.3, *Signal Descriptions* and Section 7, *Detailed Description*.

For more information, see the *Universal Serial Bus (USB) Subsystem* section in the device TRM.

Copyright © 2023 Texas Instruments Incorporated

6.9.5.25 Emulation and Debug

6.9.5.25.1 Debug Trace

Table 6-79 and Figure 6-124 assume testing over the recommended operating conditions and electrical characteristic conditions.

Table 6-78. Debug Trace Timing Conditions

PARAMETER		MIN	MAX	UNIT
OUTPUT CONDITIONS				
C_L	Output load capacitance	2	5	pF
PCB CONNECTIVITY REQUIREMENTS				
$t_{d(Trace\ Mismatch)}$	Propagation delay mismatch across all traces		200	ps

Table 6-79. Debug Trace Switching Characteristics

NO.	PARAMETER	DESCRIPTION	MIN	MAX	UNIT
DBTR1	$t_{c(TRC_CLK)}$	Cycle time, TRC_CLK	10.16		ns
DBTR2	$t_{w(TRC_CLKH)}$	Pulse width, TRC_CLK high	4.33		ns
DBTR3	$t_{w(TRC_CLKL)}$	Pulse width, TRC_CLK low	4.33		ns
DBTR4	$t_{osu(TRC_DATAV\text{-}TRC_CLK)}$	Output setup time, TRC_DATA valid to TRC_CLK edge	1.27		ns
DBTR5	$t_{oh(TRC_CLK\text{-}TRC_DATAI)}$	Output hold time, TRC_CLK edge to TRC_DATA invalid	1.27		ns
DBTR6	$t_{osu(TRC_CTLV\text{-}TRC_CLK)}$	Output setup time, TRC_CTL valid to TRC_CLK edge	1.27		ns
DBTR7	$t_{oh(TRC_CLK\text{-}TRC_CTLI)}$	Output hold time, TRC_CLK edge to TRC_CTL invalid	1.27		ns

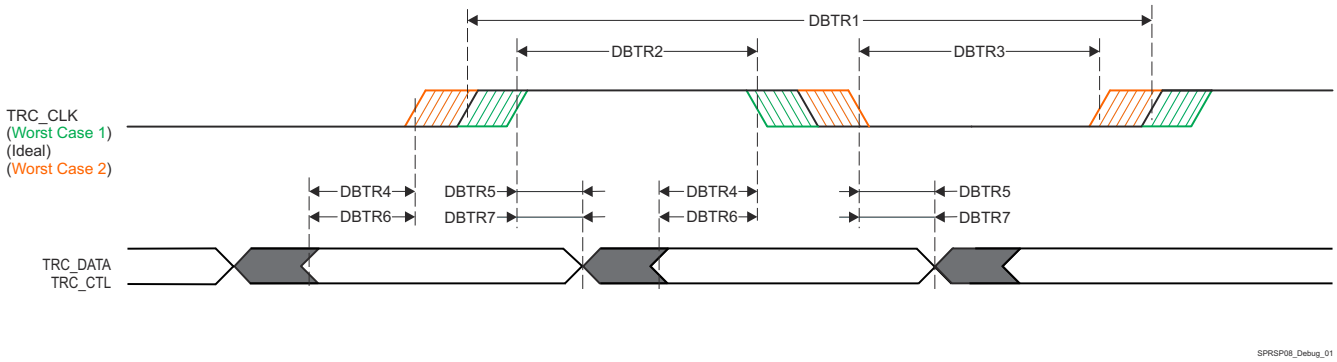

Figure 6-124. Debug Trace Switching Characteristics

6.9.5.25.2 JTAG

For more details about features and additional description information on the device IEEE 1149.1 Standard-Test-Access Port, see the corresponding sections within Section 5.3, *Signal Descriptions* and Section 7, *Detailed Description*.

Table 6-80 presents the timing conditions for JTAG.

Table 6-80. JTAG Timing Conditions

PARAMETER		SIGNAL	MIN	MAX	UNIT
INPUT CONDITIONS					
SR_I	Input slew rate	TCK	0.5	2.00	V/ns
		TDI, TMS	0.25	2.00	V/ns
OUTPUT CONDITIONS					
C_L	Output load capacitance	TDO	5	15	pF

Copyright © 2023 Texas Instruments Incorporated

6.9.5.25.2.1 JTAG Electrical Data and Timing

Section 6.9.5.25.2.1.1, Section 6.9.5.25.2.1.2, and Figure 6-125 assume testing over the recommended operating conditions and electrical characteristic conditions.

6.9.5.25.2.1.1 JTAG Timing Requirements

NO.	PARAMETER	DESCRIPTION	MIN	MAX	UNIT
J1	$t_{c(TCK)}$	Cycle time minimum, TCK	60		ns
J2	$t_{w(TCKH)}$	Pulse width minimum, TCK high	24		ns
J3	$t_{w(TCKL)}$	Pulse width minimum, TCK low	24		ns
J4	$t_{su(TDI-TCK)}$	Input setup time minimum, TDI valid to TCK high	7		ns
	$t_{su(TMS-TCK)}$	Input setup time minimum, TMS valid to TCK high	7		ns
J5	$t_{h(TCK-TDI)}$	Input hold time minimum, TDI valid from TCK high	4		ns
	$t_{h(TCK-TMS)}$	Input hold time minimum, TMS valid from TCK high	4		ns

6.9.5.25.2.1.2 JTAG Switching Characteristics

NO.	PARAMETER	DESCRIPTION	MIN	MAX	UNIT
J6	$t_{d(TCKL-TDOI)}$	Delay time minimum, TCK low to TDO invalid	0		ns
J7	$t_{d(TCKL-TDOV)}$	Delay time maximum, TCK low to TDO valid		24	ns

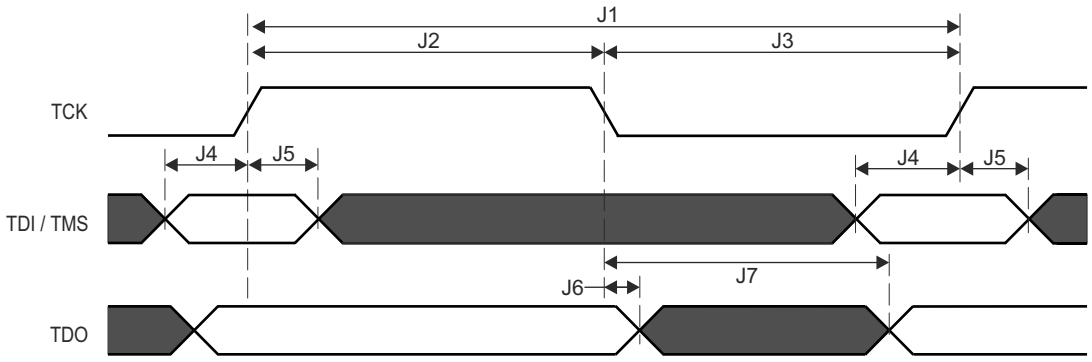

Figure 6-125. JTAG Test-Port Timing

7 Detailed Description

7.1 Overview

AM654x and AM652x Sitara™ processors are Arm applications processors built to meet the complex processing needs of modern industry 4.0 embedded products.

The AM654x and AM652x devices combine four or two Arm Cortex-A53 cores with a dual Cortex-R5F MCU subsystem which includes features intended to help customers achieve their functional safety goals for their end products and three Gigabit industrial communications subsystems (PRU_ICSSG) to create a SoC capable of high-performance industrial controls with industrial connectivity and processing for functional safety applications. AM65xx is currently undergoing assessment to be certified by TÜV SÜD according to IEC 61508.

The four A53 cores are arranged in two dual-core clusters with shared L2 memory to create two processing channels. Extensive ECC is included on on-chip memory, peripherals, and interconnect for reliability. The SoC as a whole includes features intended to help customers design systems that can achieve their functional safety goals (assessment pending with TÜV SÜD). Cryptographic acceleration and secure boot are available on AM654x and AM652x devices in addition to granular firewalls managed by the DMSC.

Programmability is provided by the quad-core Arm Cortex-A53 RISC CPUs with Neon extension, and the dual Cortex-R5F MCU subsystem is available for general purpose use as two cores or it can be used in lockstep to help meet the needs of functional safety applications. The PRU_ICSSG subsystems can be used to provide up to six ports of industrial Ethernet such as Profinet IRT, TSN, or EtherCAT® (among many others), or they can be used for standard Gigabit Ethernet connectivity.

TI provides a complete set of software and development tools for the Arm cores including Processor SDK Linux, Linux-RT, RTOS, and Android as well as C compilers and a debugging interface for visibility into source code execution. Applicable safety documentation will be made available to assist customers in developing their functional safety related systems.

Note

For more information on features, subsystems, and architecture of superset device System on Chip (SoC), see the device TRM.

Copyright © 2023 Texas Instruments Incorporated

7.2 Processor Subsystems

7.2.1 Arm Cortex-A53

The SoC implements two Dual-Core Arm Cortex-A53 Subsystems (CC_ARMSS0 and CC_ARMSS1), which are both integrated inside the Compute Cluster (along with the MSMC module). The Cortex-A53 cores are general-purpose processors that can be used for running customer applications.

The CC_ARMSS is built around the Cortex-A53 MPCore (Arm A53 Cluster), which is provided by Arm and configured by TI. It is based on the symmetric multiprocessor (SMP) architecture, and thus it delivers high performance and optimal power management, debug and emulation capabilities.

The A53 processor is a multi-issue out-of-order superscalar execution engine with integrated L1 Instruction and Data Caches, compatible with Arm®v8-A architecture. It delivers significantly more performance than its predecessors at a higher level of power efficiency.

For more information, see *Compute Cluster Arm Cortex-A53 Subsystem* section in the device TRM.

7.2.2 Arm Cortex-R5F

The MCU_ARMSS is a dual-core implementation of the Arm Cortex-R5F processor configured for split/lock operation. It also includes accompanying memories (L1 caches and tightly-coupled memories), standard Arm® CoreSight® debug and trace architecture, integrated Vectored Interrupt Manager (VIM), ECC Aggregators, and various other modules for protocol conversion and address translation for easy integration into the SoC.

For more information, see *MCU Arm Cortex-R5F Subsystem* section in the device TRM.

Copyright © 2023 Texas Instruments Incorporated

7.3 Accelerators and Coprocessors

7.3.1 PRU_ICSSG

The Programmable Real-Time Unit Subsystem and Industrial Communication Subsystem (PRU_ICSSG) consists of:

- Two 32-bit load/store RISC CPU cores — Programmable Real-Time Units (PRU0 and PRU1)
- Two auxiliary 32-bit load/store RISC CPU cores — Auxiliary Programmable Real-Time Units (RTU_PRU0 and RTU_PRU1)
- Data RAMs per PRU core
- Instruction RAMs per PRU and per RTU_PRU cores
- Shared RAM
- Peripheral modules: UART0, ECAP0, PWM, IEP0 and IEP1
- Interrupt controller (INTC)

The programmable nature of the PRU cores, along with their access to pins, events and all device resources, provides flexibility in implementing fast real-time responses, specialized data handling operations, custom peripheral interfaces, and in offloading tasks from the other processor cores of the device.

The PRU cores are programmed with a small, deterministic instruction set. Each PRU can operate independently or in coordination with each other and can also work in coordination with the device-level host CPU. This interaction between processors is determined by the nature of the firmware loaded into the PRU's instruction memory.

7.3.1.1 PRU_ICSSG PRU and RTU_PRU Cores

The PRU is a processor optimized for performing embedded tasks that require manipulation of packed memory mapped data structures, handling of system events that have tight real-time constraints and interfacing with systems external to the SoC. The PRU is both very small and very efficient at handling such tasks.

7.3.1.2 PRU_ICSSG Broadside Accelerators Overview

The PRU_ICSSG supports a broadside interface, which uses the XFR (XIN, XOUT, or XCHG) instruction to transfer the contents of PRUn or RTU_PRUn (where n = 0 or 1) registers to or from accelerators with the PRU_ICSSG. This interface enables up to 31 registers (R0-R30, or 124 bytes) to be transferred in a single instruction. The PRU_ICSSG broadside accelerators are divided into two categories – data processing accelerators and data movement accelerators.

7.3.1.3 PRU_ICSSG UART Module

The PRU_ICSSG UART0 peripheral is based on the industry standard TL16C550 asynchronous communications element, which in turn is a functional upgrade of the TL16C450.

The PRU_ICSSG UART0 performs serial-to-parallel conversions on data received from a peripheral device and parallel-to-serial conversion on data received from the CPU. The CPU can read the PRU_ICSSG UART0 status at any time. The PRU_ICSSG UART0 includes control capability and a processor interrupt system that can be tailored to minimize software management of the communications link.

7.3.1.4 PRU_ICSSG ECAP Module

A single instance of an Enhanced Capture event module (ECAP0) is integrated in each device PRU_ICSSG0, PRU_ICSSG1 and PRU_ICSSG2 subsystem.

This module provides accurate timing of events. When not being used for event capture, its resources can be used to generate a single channel of asymmetrical PWM waveforms (configurable as either one capture input, or as one auxiliary PWM output).

7.3.1.5 PRU_ICSSG PWM Module

Each of the PRU_ICSSG modules integrates one Pulse Width Modulation module (PWM). The PWM module uses the PRU_ICSSG IEP0 and IEP1 compare events to produce the PWM outputs.

Copyright © 2023 Texas Instruments Incorporated

7.3.1.6 PRU_ICSSG MII_G_RT Module

The Real-time Media Independent Interface (MII_G_RT) provides a programmable I/O interface for the PRUs to access and control up to two MII ports. The MII_G_RT module can also be configured to push and pull data independent of the PRU cores.

7.3.1.7 PRU_ICSSG MII MDIO Module

The PRU_ICSSG MII MDIO management I/F module implements the 802.3 serial management interface to interrogate and control two Ethernet PHYs simultaneously using a shared two-wire bus.

7.3.1.8 PRU_ICSSG IEP

The Industrial Ethernet Peripheral (IEP) performs hardware work required for Industrial Ethernet functions. The IEP module features an industrial ethernet timer with 16 compare events, industrial ethernet sync generator and latch capture, industrial ethernet watchdog timer, and a digital I/O port (DIGIO).

For more information, see *Programmable Real-Time Unit Subsystem and Industrial Communication Subsystem - Gigabit (PRU_ICSSG)* section in the device TRM.

7.3.2 GPU

The Graphics Processing Unit (GPU) accelerates 2-dimensional (2D) and 3-dimensional (3D) graphics and compute applications.

The GPU module is a scalable architecture which efficiently processes a number of differing multimedia data types concurrently:

- Pixel Data
- Vertex Data
- General Purpose Processing

For more information, see *Graphics Accelerator (GPU)* section in the device TRM.

Copyright © 2023 Texas Instruments Incorporated

7.4 Other Subsystems

7.4.1 DMSC

Integrated in WKUP domain Device Management and Security Controller (WKUP_DMSC) provides control over the device boot sequencing, device management, power management, and security. With the factory-sealed firmware, DMSC main functions include:

- Device management
- On-chip power management and wake-up control
- Device boot configuration and sequence
- Secure boot setup
- Authentication routines (all modes), including R5F island only boot modes
- Decryption routines
- Firewall control for isolation and Security
- Runtime Security Management and resource allocation
- Arm Cortex-M3 based DMSC acts as system security master and protects critical security assets during run-time. As part of booting on High Security (HS) device, DMSC uses on-chip keys to establish root-of-trust and authenticate images to reinforce trust. DMSC controls the power management of device, hence is responsible to bring device cleanly out of reset and enforce clock and reset rules. DMSC power management functions are critical to bring device to low power modes and sense wakeup events to bring device back to active state. DMSC acts also as main boot processor and as such is the very first subsystem that is brought out of reset after device power-on-reset.

For more information, see *WKUP Device Management and Security Controller (DMSC)* section in the device TRM.

7.4.2 MSMC

The Multicore Shared Memory Controller (MSMC) forms the heart of the compute cluster (COMPUTE_CLUSTER0) providing high-bandwidth resource access both to and from all of the connected processing elements and the rest of the system. MSMC serves as the data-movement backbone of the compute cluster.

For more information, see *Multicore Shared Memory Controller (MSMC)* section in the device TRM.

7.4.3 NAVSS

7.4.3.1 NAVSS0

Main SoC Navigator Subsystem (NAVSS0) consists of DMA/Queue Management components – UDMA and Ring Accelerator (UDMASS), Peripherals (Module subsystem [MODSS]), and a North Bridge (NBSS).

UDMASS – UDMASS is the essential part of the DMA Architecture. UDMASS consists of:

- Unified DMA Controller
- Ring Accelerator
- Packet Streaming Interface (PSI-L)

MODSS – MODSS is a collection of peripherals with different system-level functions, for example, interprocessor communication and time sync, among others. NAVSS0 contains the following modules:

- Mailbox
- Spinlock
- Two Timer Managers (Timer banks)
- Time Stamp Module (CPTS)
- Memory CRC module
- Infrastructure components such as:
  - CBASS
  - Proxies
  - Interrupt aggregators
  - Interrupt router

NBSS – This is a north bridge infrastructure

Copyright © 2023 Texas Instruments Incorporated

7.4.3.2 MCU_NAVSS0

MCU Navigator Subsystem (MCU NAVSS) has a subset of the modules of the main NAVSS and is instantiated in the MCU domain.

MCU Navigator Subsystem consists of DMA/Queue Management components – UDMA and Ring Accelerator (UDMASS), and Peripherals (Module subsystem [MODSS]).

UDMASS – UDMASS is the essential part of the DMA Architecture. UDMASS consists of:

- Unified DMA Controller
- Ring Accelerator
- Packet Streaming Interface (PSILSS)

MODSS – MODSS is a collection of peripherals with different system-level functions. NAVSS0 contains the following modules:

- Memory CRC module
- Infrastructure components such as CBASS, proxies, interrupt aggregators, and an interrupt router

ECC aggregators – for SEC/DED memory protection.

For more information, see *Navigator Subsystem (NAVSS)* section in the device TRM.

7.4.4 PDMA Controller

The Peripheral DMA is a simple DMA which has been architected to specifically meet the data transfer needs of peripherals, which perform data transfers using memory mapped registers (MMRs) accessed via a standard non-coherent bus fabric. The PDMA module is located close to one or more peripherals which require an external DMA for data movement and is architected to reduce cost by using VBUSP interfaces and supporting only statically configured Transfer Request (TR) operations.

The PDMA is only responsible for performing the data movement transactions which interact with the peripherals themselves. Data which is read from a given peripheral is packed by a PDMA source channel into a PSI-L data stream which is then sent to a remote peer UDMA-P destination channel which then performs the movement of the data into memory. Likewise, a remote UDMA-P source channel fetches data from memory and transfers it to a peer PDMA destination channel over PSI-L which then performs the writes to the peripheral.

For more information, see PDMA Controller section in the device TRM.

Copyright © 2023 Texas Instruments Incorporated

7.4.5 Peripherals

7.4.5.1 ADC

The Analog-to-Digital Converter (ADC) module contains a single 12-bit ADC which can be multiplexed to any 1 of 8 analog inputs (channels).

For more information, see *Analog-to-Digital Converter (ADC)* section in the device TRM.

7.4.5.2 CAL

The Camera Adapter Layer Subsystem (CALSS) is based on a Camera Adaptation Layer (CAL) module, which enables connection to multiple camera sensors through shared MIPI D-PHY module and LVDS receiver.

CAL Module (CALSS0) is a very flexible subsystem that enables connection to multiple cameras supporting MIPI CSI-2 over D-PHY serial interface, a LVDS serial interface, and a traditional parallel interface. It also includes an internal write DMA engine connected to VBUSM interface.

For more information, see *Camera Adapter Layer (CAL) Subsystem* section in the device TRM.

7.4.5.3 CPSW2G

The two-port Gigabit Ethernet MAC (MCU_CPSW0) subsystem provides Ethernet packet communication for the device and is configured in a similar manner as a two-port Ethernet switch. MCU_CPSW0 features the Reduced Gigabit Media Independent Interface (RGMII), Reduced Media Independent Interface (RMII), and the Management Data Input/Output (MDIO) interface for physical layer device (PHY) management.

For more information, see *Gigabit Ethernet MAC (MCU_CPSW0)* section in the device TRM.

7.4.5.4 DCC

The Dual Clock Comparator (DCC) is used to determine the accuracy of a clock signal during the time execution of an application. Specifically, the DCC is designed to detect drifts from the expected clock frequency. The desired accuracy can be programed based on calculation for each application. The DCC measures the frequency of a selectable clock source using another input clock as a reference.

For more information, see *Dual Clock Comparator (DCC)* section in the device TRM.

7.4.5.5 DDRSS

The DDR subsystem in this device comprises DDR controller, DDR PHY and wrapper logic to integrate these blocks in the device. The DDR subsystem is referred to as DDRSS0 and is used to provide an interface to external SDRAM devices which can be utilized for storing program or data. DDRSS0 is accessed via MSMC, and not directly through the system interconnect.

For more information, see *DDR Subsystem (DDRSS)* section in the device TRM.

7.4.5.6 DSS

The Display Subsystem (DSS) is a flexible, multi-pipeline subsystem that supports high-resolution display outputs. DSS includes input pipelines providing multi-layer blending with transparency to enable on-the-fly composition. Various pixel processing capabilities are supported, such as color space conversion and scaling, among others. DSS includes a DMA engine, which allows direct access to the frame buffer (device system memory). Display outputs can connect seamlessly to an Open LVDS Display Interface transmitter (OLDITX), or can directly drive device pads as a parallel video output interface.

For more information, see *Display Subsystem (DSS)* section in the device TRM.

7.4.5.7 ECAP

Integrated in the MAIN domain one Enhanced Capture (ECAP) module provides accurate timing of events. When not being used for event capture, its resources can be used to generate a single channel of asymmetrical PWM waveforms (configurable as either one capture input, or as one auxiliary PWM output).

ECAP module can be used for:

- Sample rate measurements of audio inputs

Copyright © 2023 Texas Instruments Incorporated

- Speed measurements of rotating machinery (for example, toothed sprockets sensed via Hall sensors)
- Elapsed time measurements between position sensor pulses
- Period and duty cycle measurements of pulse train signals
- Decoding current or voltage amplitude derived from duty cycle encoded current/voltage sensors.

For more information, see *Enhanced Capture (ECAP) Module* section in the device TRM.

7.4.5.8 EPWM

An effective PWM peripheral must be able to generate complex pulse width waveforms with minimal CPU overhead or intervention. It needs to be highly programmable and very flexible while being easy to understand and use. The EPWM unit described here addresses these requirements by allocating all needed timing and control resources on a per PWM channel basis. Cross coupling or sharing of resources has been avoided; instead, the EPWM is built up from smaller single channel modules with separate resources and that can operate together as required to form a system. This modular approach results in an orthogonal architecture and provides a more transparent view of the peripheral structure, helping users to understand its operation quickly.

For more information, see *Enhanced Pulse Width Modulation (EPWM) Module* section in the device TRM.

7.4.5.9 ELM

The ELM is used with the GPMC. Syndrome polynomials generated on-the-fly when reading a NAND flash page and stored in GPMC registers are passed to the ELM. A host processor can then correct the data block by flipping the bits to which the ELM error-location outputs point.

When reading from NAND flash memories, some level of error-correction is required. In the case of NAND modules with no internal correction capability, sometimes referred to as *bare NANDs*, the correction process is delegated to the memory controller. ELM can be also used to support parallel NOR flash or NAND flash.

The General-Purpose Memory Controller (GPMC) probes data read from an external NAND flash and uses this to compute checksum-like information, called syndrome polynomials, on a per-block basis. Each syndrome polynomial gives a status of the read operations for a full block, including 512 bytes of data, parity bits, and an optional spare-area data field, with a maximum block size of 1023 bytes. Computation is based on a Bose-Chaudhuri-Hocquenghem (BCH) algorithm. The ELM extracts error addresses from these syndrome polynomials.

Based on the syndrome polynomial value, the ELM can detect errors, compute the number of errors, and give the location of each error bit. The actual data is not required to complete the error-correction algorithm. Errors can be reported anywhere in the NAND flash block, including in the parity bits.

For more information, see *Error Location Module (ELM)* section in the device TRM.

7.4.5.10 ESM

The Error Signaling Module (ESM) aggregates safety-related events and errors from throughout the device into one location. It can signal both low and high priority interrupts to a processor to deal with a safety event and/or manipulate an I/O error pin to signal an external hardware that an error has occurred. Therefore an external controller is able to reset the device or keep the system in a safe, known state.

For more information, see *Error Signaling Module (ESM)* section in the device TRM.

7.4.5.11 EQEP

The Enhanced Quadrature Encoder Pulse (EQEP) peripheral is used for direct interface with a linear or rotary incremental encoder to get position, direction and speed information from a rotating machine for use in high performance motion and position control system.

For more information, see *Enhanced Quadrature Encoder Pulse (EQEP) Module* section in the device TRM.

7.4.5.12 GPIO

The General-Purpose Input/Output (GPIO) peripheral provides dedicated general-purpose pins that can be configured as either inputs or outputs. When configured as an output, the user can write to an internal register to

Copyright © 2023 Texas Instruments Incorporated

control the state driven on the output pin. When configured as an input, user can obtain the state of the input by reading the state of an internal register.

In addition, the GPIO peripheral can produce host CPU interrupts and DMA synchronization events in different interrupt/event generation modes.

The device has three instances of GPIO modules. The GPIO pins are grouped into banks (16 pins per bank and 9 banks per module), which means that each GPIO module provides up to 144 dedicated general-purpose pins with input and output capabilities; thus, the general-purpose interface supports up to 432 (3 instances × (9 banks × 16 pins)) pins. Since WKUP_GPIO0_[56:143], GPIO0_[96:143], and GPIO1_[90:143] are reserved in this device, general purpose interface supports up to 242 pins.

For more information, see *General-Purpose Interface (GPIO)* section in the device TRM.

7.4.5.13 GPMC

The General-Purpose Memory Controller is a unified memory controller dedicated for interfacing with external memory devices like:

- Asynchronous SRAM-like memories and application-specific integrated circuit (ASIC) devices
- Asynchronous, synchronous, and page mode (available only in non-multiplexed mode) burst NOR flash devices
- NAND flash
- Pseudo-SRAM devices

For more information, see *General-Purpose Memory Controller (GPMC)* section in the device TRM.

7.4.5.14 HyperBus

Note

HyperBus is not available on this device.

The HyperBus module is a part of the device Flash Subsystem (FSS).

The HyperBus module is a low pin count memory interface that provides high read/write performance. The HyperBus module connects to HyperBus memory (HyperFlash or HyperRAM) and uses simple HyperBus protocol for read and write transactions.

There is one HyperBus™ module inside the device. The HyperBus module includes one HyperBus Memory Controller (HBMC).

For more information, see *HyperBus Interface* section in the device TRM.

7.4.5.15 I2C

The device contains six multimaster Inter-Integrated Circuit (I2C) controllers each of which provides an interface between a local host (LH), such as an Arm and any I^2C-bus-compatible device that connects via the I^2C serial bus. External components attached to the I^2C bus can serially transmit and receive up to 8 bits of data to and from the LH device through the 2-wire I^2C interface.

Each multimaster I2C module can be configured to act like a slave or master I^2C-compatible device.

The WKUP_I2C0 and MCU_I2C0 controllers have dedicated I^2C compliant open drain buffers, and support fast mode (up to 400 Kbps).The I2C0, I2C1, I2C2, and I2C3 controllers are multiplexed with standard LVCMOS I/O and connected to emulate open drain.The I^2C emulation is achieved by configuring the LVCMOS buffers to output Hi-Z instead of driving high when transmitting logic 1.

For more information, see *Inter-Integrated Circuit (I2C) Interface* section in the device TRM.

7.4.5.16 MCAN

The Controller Area Network (CAN) is a serial communications protocol which efficiently supports distributed real-time control. CAN has high immunity to electrical interference. In a CAN network, many short messages are broadcast to the entire network, which provides for data consistency in every node of the system.

Copyright © 2023 Texas Instruments Incorporated

The MCAN module supports both classic CAN and CAN FD (CAN with Flexible Data-Rate) specifications. CAN FD feature allows high throughput and increased payload per data frame. The classic CAN and CAN FD devices can coexist on the same network without any conflict.

The device supports two MCAN modules - MCU_MCAN0 and MCU_MCAN1. They connect to the physical layer of the CAN network through external (for the device) transceivers. Each MCAN module supports flexible bit rates greater than 1 Mbps and is compliant to ISO 11898-1:2015.

For more information, see *Modular Controller Area Network (MCAN)* section in the device TRM.

7.4.5.17 MCASP

The MCASP functions as a general-purpose audio serial port are optimized to the requirements of various audio applications. The MCASP module can operate in both transmit and receive modes. The MCASP is useful for time-division multiplexed (TDM) stream, Inter-IC Sound (I2S) protocols reception and transmission as well as for an intercomponent digital audio interface transmission (DIT). The MCASP has the flexibility to gluelessly connect to a Sony/Philips digital interface (S/PDIF) transmit physical layer component.

Although intercomponent digital audio interface reception (DIR) mode (this is, S/PDIF stream receiving) is not natively supported by the MCASP module, a specific TDM mode implementation for the MCASP receivers allows an easy connection to external DIR components (for example, S/PDIF to I2S format converters).

For more information, see *Multichannel Audio Serial Port (MCASP)* section in the device TRM.

7.4.5.18 MCRC

VBUSM CRC controller is a module which is used to perform CRC (Cyclic Redundancy Check) to verify the integrity of a memory system. A signature representing the contents of the memory is obtained when the contents of the memory are read into MCRC Controller. The responsibility of MCRC controller is to calculate the signature for a set of data and then compare the calculated signature value against a predetermined good signature value. MCRC controller provides four channels to perform CRC calculation on multiple memories in parallel and can be used on any memory system. Channel 1 can also be put into data trace mode, where MCRC controller compresses each data being read through CPU read data bus.

For more information, see *Memory Cyclic Redundancy Check (MCRC) Controller* section in the device TRM.

7.4.5.19 MCSPI

The MCSPI module is a multichannel transmit/receive, master/slave synchronous serial bus.

There are total of eight MCSPI modules in the device.

MCSPI3 and MCSPI4 include internal connectivity to MCSPI modules in the MCU domain, as follows:

- MCSPI3 is connected as a master to MCU_MCSPI1 by default at power-up. MCU_MCSPI1 and MCSPI3 may be optionally mapped to external device pads.
- MCSPI4 is directly connected as a slave to MCU_MCSPI2 by default at power-up. MCSPI4 and MCU_MCSPI2 are not pinned out externally.

For more information, see *Multichannel Serial Peripheral Interface (MCSPI)* section in the device TRM.

7.4.5.20 MMCSD

There are two MMCSD modules inside the device - MMCSD0 and MMCSD1. Each MMCSD module includes one MMCSD Host Controller.

Each controller has the following data bus width:

- MMCSD0 - 8-bit wide data bus
- MMCSD1 - 4-bit wide data bus

The MMCSD Host Controller provides an interface to eMMC 5.1 (embedded MultiMedia Card), SD 4.10 (Secure Digital), and SDIO 4.0 (Secure Digital IO) devices. The MMCSD Host Controller deals with MMCSD/SDIO protocol at transmission level, data packing, adding cyclic redundancy checks (CRCs), start/end bit insertion, and checking for syntactical correctness.

Copyright © 2023 Texas Instruments Incorporated

For more information, see *Multimedia Card/Secure Digital (MMCSD) Interface* section in the device TRM.

7.4.5.21 OSPI

The Octal Serial Peripheral Interface (OSPI™) module is a kind of Serial Peripheral Interface (SPI) module which allows single, dual, quad or octal read and write access to external flash devices.

The OSPI module is used to transfer data, either in a memory mapped direct mode (for example a processor wishing to execute code directly from external flash memory), or in an indirect mode where the module is set-up to silently perform some requested operation, signaling its completion via interrupts or status registers. For indirect operations, data is transferred between system memory and external flash memory via an internal SRAM which is loaded for writes and unloaded for reads by a device master at low latency system speeds. Interrupts or status registers are used to identify the specific times at which this SRAM should be accessed using user programmable configuration registers.

For more information, see *Octal Serial Peripheral Interface (OSPI)* section in the device TRM.

7.4.5.22 PCIE

The Peripheral Component Interconnect Express (PCIe) subsystem is built around a multi-lane dual-mode PCIe controller that provides low pin-count, high reliability, and high-speed data transfers at rates of up to 5.0 Gbps per lane for serial links on backplanes and printed wiring boards.

The device includes two instantiations of PCIe subsystem named PCIE0 and PCIE1.

For more information, see *Peripheral Component Interconnect Express (PCIe) Subsystem* section in the device TRM.

7.4.5.23 SerDes

The goal of the SerDes is to convert device (SoC) parallel data into serialized data that can be output over a high-speed electrical interface. In the opposite direction, SerDes converts high-speed serial data into parallel data that can be processed by the device. To this end, the SerDes contains a variety of functional blocks to handle both the external analog interface as well as the internal digital logic.

For more information, see *Serializer/Deserializer (SerDes)* section in the device TRM.

7.4.5.24 RTI

This section describes the Real Time Interrupt (RTI) modules with Windowed Watchdog Timer (WWDT) functionality for the device.

The Real Time Interrupt module provides timer functionality for operating systems and for benchmarking code. The module incorporates several counters, which define the timebases needed for scheduling in the operating system.

This module is specifically designed to fulfill the requirements for OSEK (“Offene Systeme und deren Schnittstellen für die Elektronik im Kraftfahrzeug”; “Open Systems and the Corresponding Interfaces for Automotive Electronics”) as well as OSEK/Time compliant operating systems.

The timers also provide the ability to benchmark certain areas of code by reading the counter contents at the beginning and the end of the desired code range and calculating the difference between the values.

For more information, see *Real Time Interrupt (RTI) Module* section in the device TRM.

7.4.5.25 Timers

There are sixteen timer modules in the device.

All timers include specific functions to generate accurate tick interrupts to the operating system.

Each timer can be clocked from several different independent clocks. The selection of clock source is made from registers in the MCU_CTRL_MMR0/CTRL_MMR0.

In the MCU domain the device provides 2 timer pins to be used as MCU Timer Capture inputs or as MCU Timer PWM outputs. In order to provide maximum flexibility, these 2 pins may be used with any of MCU_TIMER0

Copyright © 2023 Texas Instruments Incorporated

through MCU_TIMER3 instances. System level muxes are used to control the capture source pin for each MCU_TIMER[3-0] and the MCU_TIMER[3-0] source for each MCU_TIMER_IO[1-0] PWM output

In the MAIN domain the device provides 8 timer pins to be used as Timer Capture inputs or as Timer PWM outputs. For maximum flexibility, these 8 pins may be used with any of TIMER0 through TIMER11 instances. System level muxes are used to control the capture source pin for each TIMER[11-0] and the TIMER[11-0] source for each TIMER_IO[7-0] PWM output.

For more information, see *Timers* section in the device TRM.

7.4.5.26 UART

The UART is a slave peripheral that utilizes the DMA for data transfer or interrupt polling via host CPU. There are five UART modules in the device. All UART modules support IrDA and CIR modes when 48 MHz function clock is used. Each UART can be used for configuration and data exchange with a number of external peripheral devices or interprocessor communication between devices.

The CIR mode uses a variable pulse-width modulation (PWM) technique (based on multiples of a programmable *t* period) to encompass the various formats of infrared encoding for remote-control applications. The CIR logic transmits data packets based on a user-definable frame structure and packet content.

For more information, see *Universal Synchronous/Asynchronous Receiver/Transmitter (UART)* section in the device TRM.

7.4.5.27 USB

Similar to earlier versions of USB bus, USB 3.0 is a general-purpose cable bus, supporting data exchange between a host device and a wide range of simultaneously accessible peripherals.

The device supports two USB subsystems, both instantiated in the MAIN system domain:

- USB3SS0 is SuperSpeed (SS) USB 3.0 Dual-Role-Device (DRD) subsystem with integrated SS (USB3.0) PHY and HS/FS/LS (USB2.0) PHY
- USB3SS1 is HighSpeed (HS) USB 2.0 Dual-Role-Device (DRD) subsystem with integrated HS/FS/LS (USB2.0) PHY

For more information, see *Universal Serial Bus (USB) Subsystem* section in the device TRM.

7.5 Identification

7.5.1 Revision Identification

For more information about Revision Identification, see Section 9.1, *Device Nomenclature*.

7.5.2 Die Identification

The device part number identification data can be read in the CTRLMMR_WKUP_JTAG_DEVICE_ID register.

For more information about Die Identification, see *Device Identification* section in the device TRM.

7.5.3 JTAG Identification

The manufacturer identity, the boundary scan part number, and the silicon revision of the device can be read in the CTRLMMR_WKUP_JTAGID register.

For more information about JTAG Identification, see *Device Identification* section in the device TRM.

7.5.4 ROM Code Identification

The ROM code uses several global memories in the MSRAM that are useful for debugging.

For more information about ROM Code Identification, see *Global Memory Addresses Used by ROM Code* section in the device TRM.

Copyright © 2023 Texas Instruments Incorporated

7.6 Boot Modes

This device supports primary boot from the UART, I2C, OSPI, HyperBus, parallel NOR Flash, SD or eMMC™, USB, PCIe, and Ethernet interfaces. If the primary boot fails, the device also supports a secondary backup boot from the UART, I2C, OSPI (legacy SPI mode only), HyperBus, SD, USB, and Ethernet interfaces.

The Boot Mode pins (BOOTMODE[18:00] and MCU_BOOTMODE[09:00]) provide the means to select the desired boot mode before the device is powered up. It is the user's responsibility to properly set the (MCU_)BOOTMODE pins (via pullups or pulldowns) depending on the desired boot scenario.

For more detailed information about the primary/secondary Boot Modes, including the Boot Mode pins, usage, and selections, see the *Boot Mode Pins* section in the device TRM.

Copyright © 2023 Texas Instruments Incorporated

8 Applications, Implementation, and Layout

Note

Information in the following applications sections is not part of the TI component specification, and TI does not warrant its accuracy or completeness. TI's customers are responsible for determining suitability of components for their purposes. Customers should validate and test design implementation to confirm system functionality.

8.1 Device Connection and Layout Fundamentals

8.1.1 Power Supply Decoupling and Bulk Capacitors

8.1.1.1 Power Distribution Network Implementation Guidance

The Sitara™ Processor Power Distribution Networks: Implementation and Analysis provides guidance for successful implementation of the power distribution network. This includes PCB stackup guidance as well as guidance for optimizing the selection and placement of the decoupling capacitors. TI supports *only* designs that follow the board design guidelines contained in the application report.

8.1.2 External Oscillator

For more information, see Section 6.9.4.1, *Input Clocks / Oscillators*.

8.1.3 JTAG and EMU

Texas Instruments supports a variety of eXtended Development System (XDS) JTAG controllers with various debug capabilities beyond only JTAG support. A summary of this information is available in the XDS Target Connection Guide.

For more recommendations on EMU routing, see Emulation and Trace Headers Technical Reference Manual.

8.1.4 Reset

The device incorporates four external reset pins (MCU_PORz, MCU_RESETz, PORz, and RESETz) and four reset status pins (MCU_PORz_OUT, MCU_RESETSTATz, PORz_OUT, and RESETSTATz). Additional reset modes are available through internal registers and emulation.

The device integrates an on-chip Power-on-Reset (POR) generator. Additionally, this device supports an external POR generation through a PORz and MCU_PORz input pin. The MCU_BYPASS_POR pin selects the POR source. When the MCU_BYPASS_POR pin is set high at power-up, on-chip POR generation will be completely bypassed and the external POR used. When it is low, the POR is generated internally. However, the four external reset inputs must all be pulled high to enable this internal POR generation.

8.1.5 Unused Pins

For more information about Unused Pins, see Section 5.5, *Connections for Unused Pins*.

8.1.6 Hardware Design Guide for AM65x/DRA80xM Devices

The Hardware Design Guide for AM65x/DRA80xM Devices document describes hardware system design considerations for the AM65x/DRA80xM family of processors.This design guideis intended to be used as an aid during the development of application hardware.

Copyright © 2023 Texas Instruments Incorporated

8.2 Peripheral- and Interface-Specific Design Information

8.2.1 DDR Board Design and Layout Guidelines

The goal of the AM65x/DRA80xM DDR Board Design and Layout Guidelines is to make the DDR4 system implementation straightforward for all designers. Requirements have been distilled down to a set of layout and routing rules that allow designers to successfully implement a robust design for the topologies that TI supports. TI only supports board designs using DDR4 memories that follow the guidelines in this document.

8.2.2 OSPI Board Design and Layout Guidelines

The following section details the routing guidelines that must be observed when routing the OSPI interfaces.

8.2.2.1 No Loopback and Internal Pad Loopback

- The MCU_OSPI[x]_CLK output signal must be connected to the CLK pin of the flash device
- The signal propagation delay from the MCU_OSPI[x]_CLK signal to the flash device must be < 450pS (~7cm as stripline or ~8cm as microstrip)
- 50 Ω PCB routing is recommended along with series terminations, as shown in Figure 8-1
- Propagation delays and matching:
  - A to B < 450ps
  - Matching skew: < 60pS

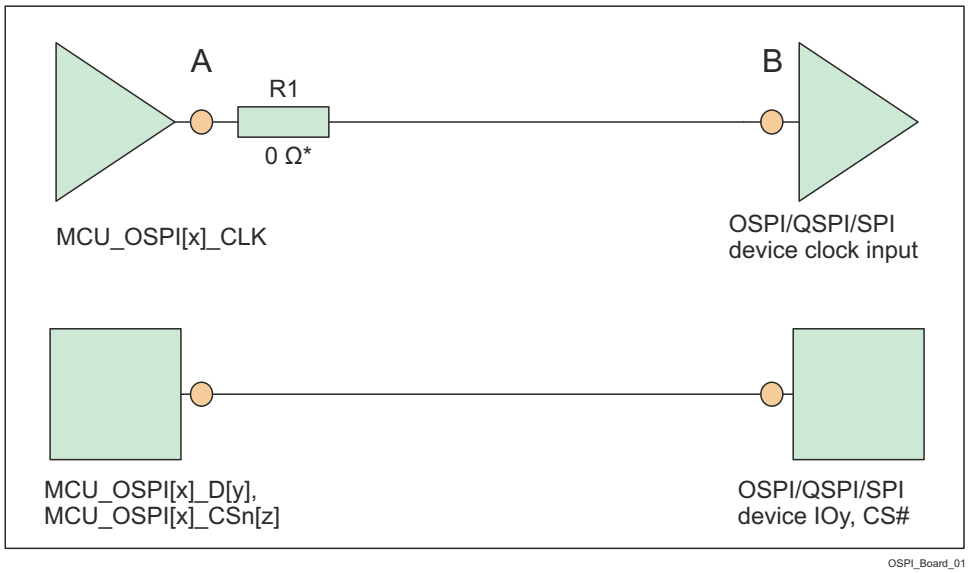

*0 Ω resistor (R1), located as close as possible to the MCU_OSPI[x]_CLK pin, is placeholder for fine tuning, if needed

Figure 8-1. OSPI Interface High Level Schematic

8.2.2.2 External Board Loopback

- The MCU_OSPI[x]_CLK output signal must be connected to the CLK pin of the flash device
- The MCU_OSPI[x]_LBCLKO output signal must be looped back into the MCU_OSPI[x]_DQS input
- The signal propagation delay from the MCU_OSPI[x]_CLK pin to the flash device CLK input pin (A to B) should be approximately equal to half of the signal propagation delay from the MCU_OSPI[x]_LBCLKO pin to the MCU_OSPI[x]_DQS pin ((C to D)/2). See the note below.
- The signal propagation delay from the MCU_OSPI[x]_CLK pin to the flash device CLK input pin (A to B) must be approximately equal to the signal propagation delay of the control and data signals between the flash device and the SoC device (E to F, or F to E)
- 50 Ω PCB routing is recommended along with series terminations, as shown in Figure 8-2
- Propagation delays and matching:
  - A to B = E to F = (C to D) / 2
  - Matching skew: < 60pS

Copyright © 2023 Texas Instruments Incorporated

Note

The OSPI Board Loopback Hold time requirement (described in Section 6.9.5.18, *OSPI*) is larger than the Hold time provided by a typical flash device. Therefore, the length of MCU_OSPI[x]_LBCLKO pin to the MCU_OSPI[x]_DQS pin (C to D) may need to be shortened to compensate.

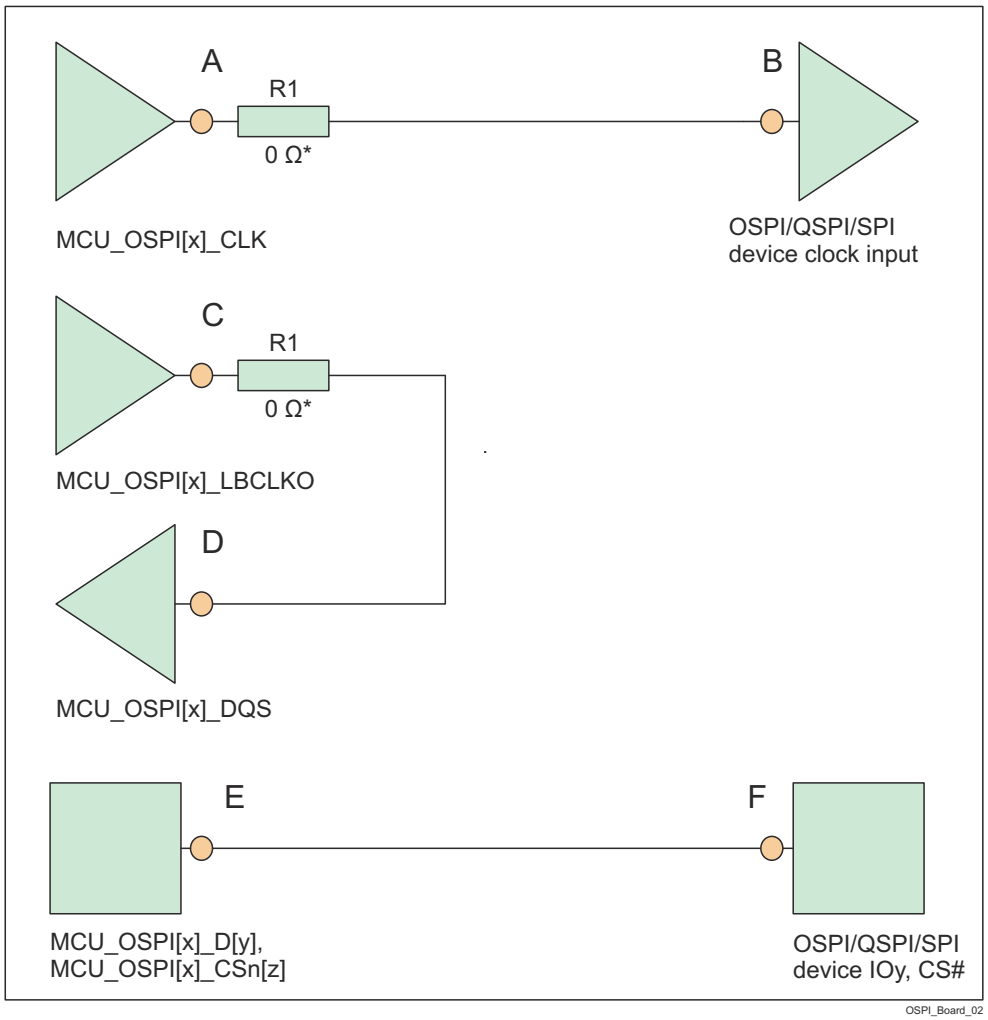

*0 Ω resistor (R1), located as close as possible to the MCU_OSPI[x]_CLK and MCU_OSPI[x]_LBCLKO pins, is placeholder for fine tuning, if needed

Figure 8-2. OSPI Interface High Level Schematic

8.2.2.3 DQS (Only Available in Octal Flash Devices)

- The MCU_OSPI[x]_CLK output signal must be connected to the CLK pin of the flash device
- The DQS pin of the flash devices must be connected to MCU_OSPI[x]_DQS signal
- The signal propagation delay from the MCU_OSPI[x]_CLK pin to the flash device CLK input pin (A to B) should be approximately equal to the signal propagation delay from the MCU_OSPI[x]_DQS pin to the DQS output pin (C to D)
- 50 Ω PCB routing is recommended along with series terminations, as shown in Figure 8-3
- Propagation delays and matching:
  - A to B = C to D
  - Matching skew: < 60pS

Copyright © 2023 Texas Instruments Incorporated

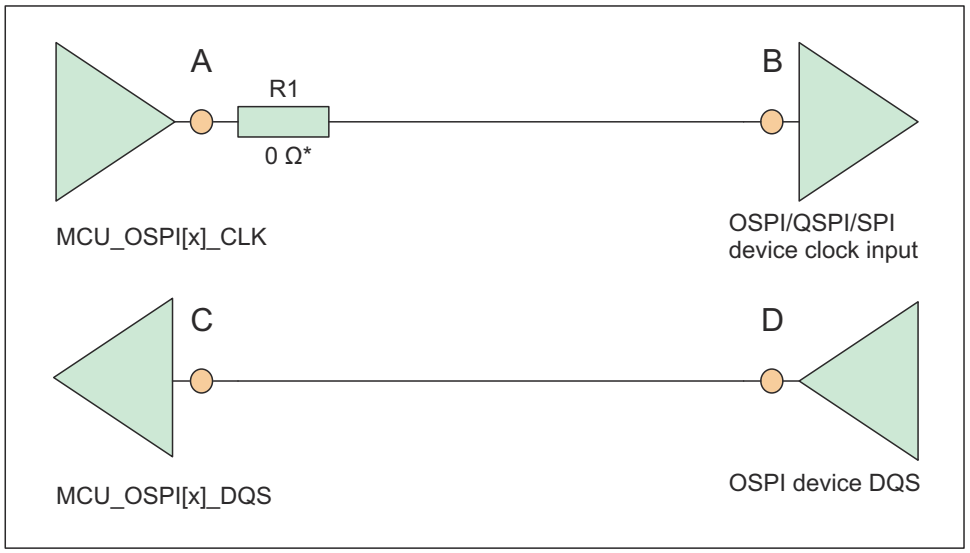

*0 Ω resistor (R1), located as close as possible to the MCU_OSPI[x]_CLK pin, is placeholder for fine tuning, if needed

Figure 8-3. OSPI Interface High Level Schematic

8.2.3 USB Design Guidelines

The USB 3.1 specification allows the VBUS voltage to be as high as 5.5 V for normal operation, and as high as 20 V when the Power Delivery addendum is supported. Some automotive applications require a max voltage to be 30 V.

The AM65xx device requires the VBUS signal voltage be scaled down using an external resistor divider (as shown in the Figure 8-4), which limits the voltage applied to the actual device pin (USB0_VBUS, USB1_VBUS). The tolerance of these external resistors should be equal to or less than 1%, and the leakage current of zener diode at 5 V should be less than 100 nA.

(1)

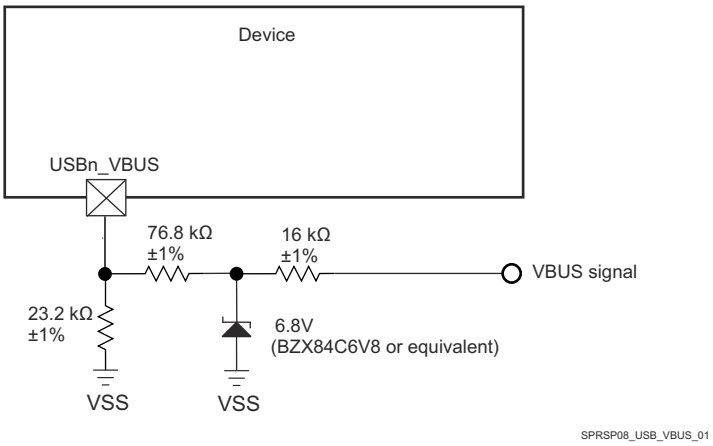

Figure 8-4. USB VBUS Detect Voltage Divider / Clamp Circuit

The USB0_VBUS and USB1_VBUS pins may be considered to be fail-safe because the external circuit in Figure 8-4 limits the input current to the actual device pin in a case where VBUS is applied while the device is powered off.

Copyright © 2023 Texas Instruments Incorporated

8.2.4 High Speed Differential Signal Routing Guidance

The High-Speed Interface Layout Guidelines provides guidance for successful routing of the high speed differential signals. This includes PCB stackup and materials guidance as well as routing skew, length and spacing limits. TI supports *only* designs that follow the board design guidelines contained in the application report.

8.2.5 System Power Supply Monitor Design Guidelines

The VDDA_VSYS_MON pin provides a way to monitor the system power supply and is not fail-safe, unless implemented with the appropriate resistor voltage divider source. This pin should be sourced with a resistor voltage divider that receives its power from the system power supply.

The output of the resistor voltage divider is connected to the VDDA_VSYS_MON pin which has a trigger voltage of 0.5 V ± 5%. The resistor voltage divider should be implemented such that it has a reference current in the range of 1 µA to 50 µA, output voltage that never exceeds the maximum value defined in Section 6.1, *Absolute Maximums Ratings*, and output voltage of 0.54 V when the system supply drops to its lowest desired operating voltage.

The recommended output voltage of 0.54 V provides 40 mV of margin that includes 5% for tolerance of the voltage monitor, 1% for tolerance of each resistor, plus 5 mV of potential error introduced by input leakage current. This value ensures the voltage monitor will never trigger before reaching the expected trigger voltage.

Figure 8-5 presents an example, when the system power supply voltage is nominally 5 V and the desired trigger threshold is -10% or 4.5 V.

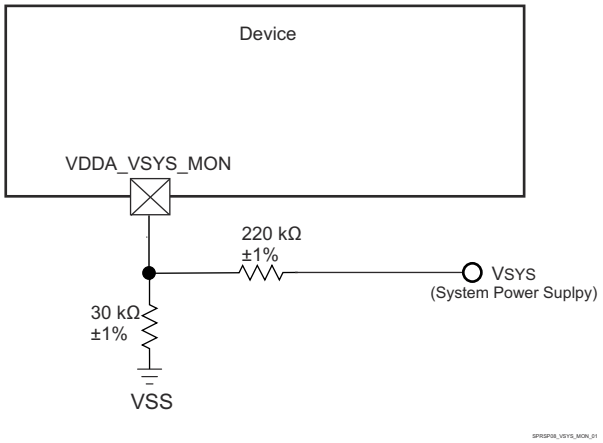

Figure 8-5. System Supply Monitor Voltage Divider Circuit

In this example the voltage divider ratio should be (4.5 V / 0.54 V) = 8.33 V. This ratio produces a 0.54 V potential on the VDDA_VSYS_MON pin when the system power supply is 4.5 V. In this case, the voltage monitor will trigger in the range of 3.88 V to 4.5 V. Precision 1% resistors with similar thermal coefficient are recommended for implementing the resistor voltage divider.

8.2.6 MMC Design Guidelines

The MMC peripheral on this device contains an integrated SDIO LDO for handling automatic voltage transitions for SD Interfaces. For details about how to connect the device pins associated with the SDIO LDO, refer to Figure 8-10 through Figure 8-12.

8.2.7 Integrated Power Management Features

The device offers integrated power management features that simplify design and cost/BOM of the system level power solution. Simplicity of the system design enables modular and scalable solutions suitable for platform design and re-use. The AM65x Power Management Features User Guide introduces the integrated power management features and advantages for system level power solution.

Copyright © 2023 Texas Instruments Incorporated

8.2.8 External Capacitors

Figure 8-6 shows an example of the external decoupling capacitor connections.

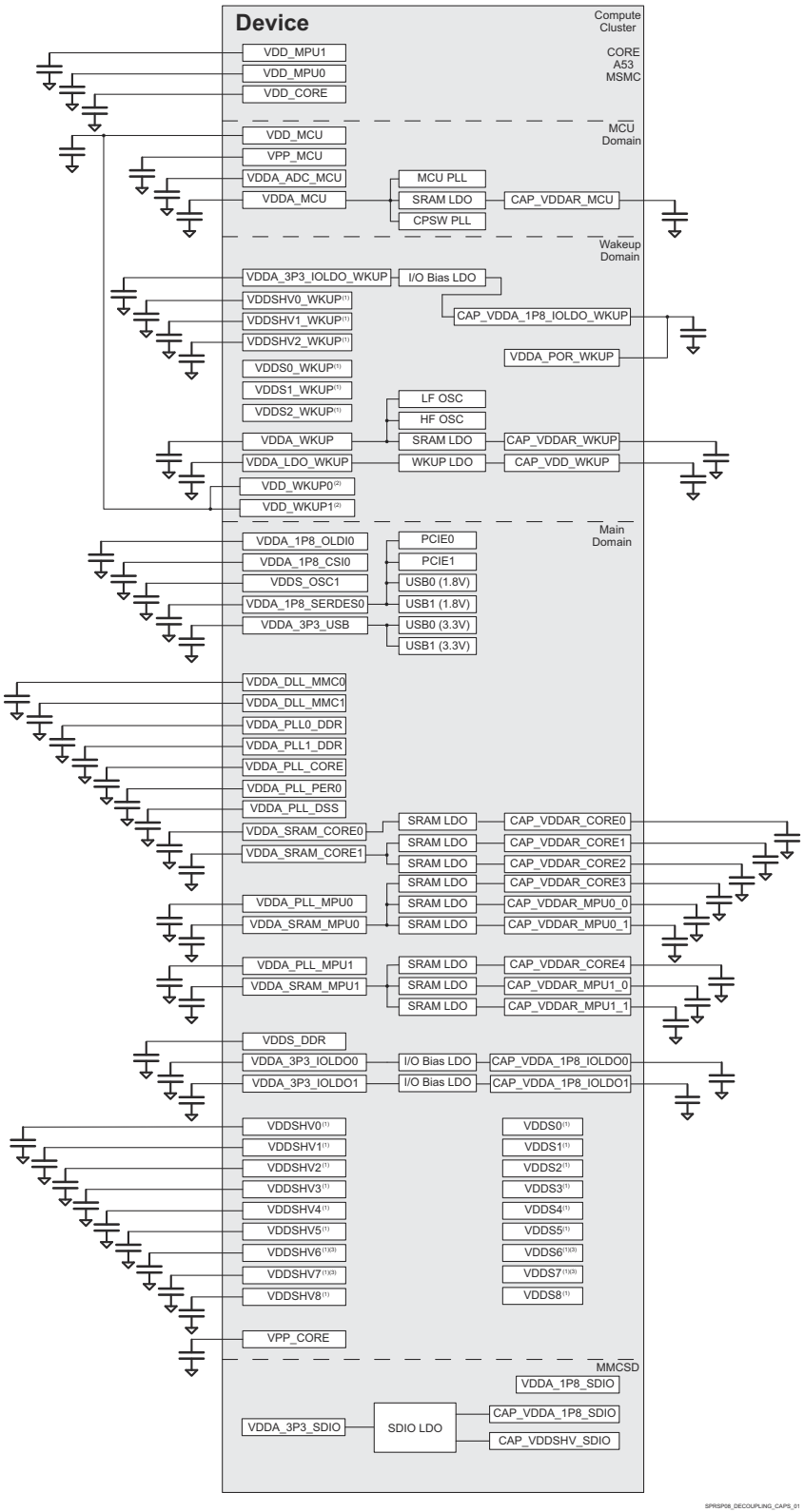

Figure 8-6. External Decoupling Capacitor Connections

Copyright © 2023 Texas Instruments Incorporated

8.2.8.1 LVCMOS External Capacitor Connections

Each VDDSHV[8:0], and VDDSHV[2:0]_WKUP can be configured as 1.8 V or 3.3 V. Figure 8-7 through Figure 8-10 illustrate different system configurations for the dual-voltage I/O supplies.

VDDSHV[8:0], and VDDSHV[2:0]_WKUP are the dual-voltage LVCMOS I/O supplies, while VDDS[8:0] are the dual-voltage LVCMOS I/O bias supplies. If any of the VDDSHV[8:0] or VDDSHV[2:0]_WKUP are configured for 3.3 V operation, the corresponding VDDS[8:0] or VDDS[2:0]_WKUP should be sourced from the internal I/O Bias LDO. When any of the VDDSHV[8:0] or VDDSHV[2:0]_WKUP are configured for 1.8 V operation, both VDDS[8:0] and VDDSHV[8:0] or VDDS[2:0]_WKUP and VDDSHV[2:0]_WKUP should be supplied from the same source.

Two I/O Bias LDOs are integrated on this device to share load current. The recommended load sharing is as follows:

- IOLDO0 : VDDS0, VDDS1, VDDS2, VDDS5, VDDS7, VDDS8
- IOLDO1 : VDDS3, VDDS4, VDDS6

Figure 8-7 shows all VDDSHV[8:0], and VDDSHV[2:0]_WKUP supplies configured for 3.3V operation.

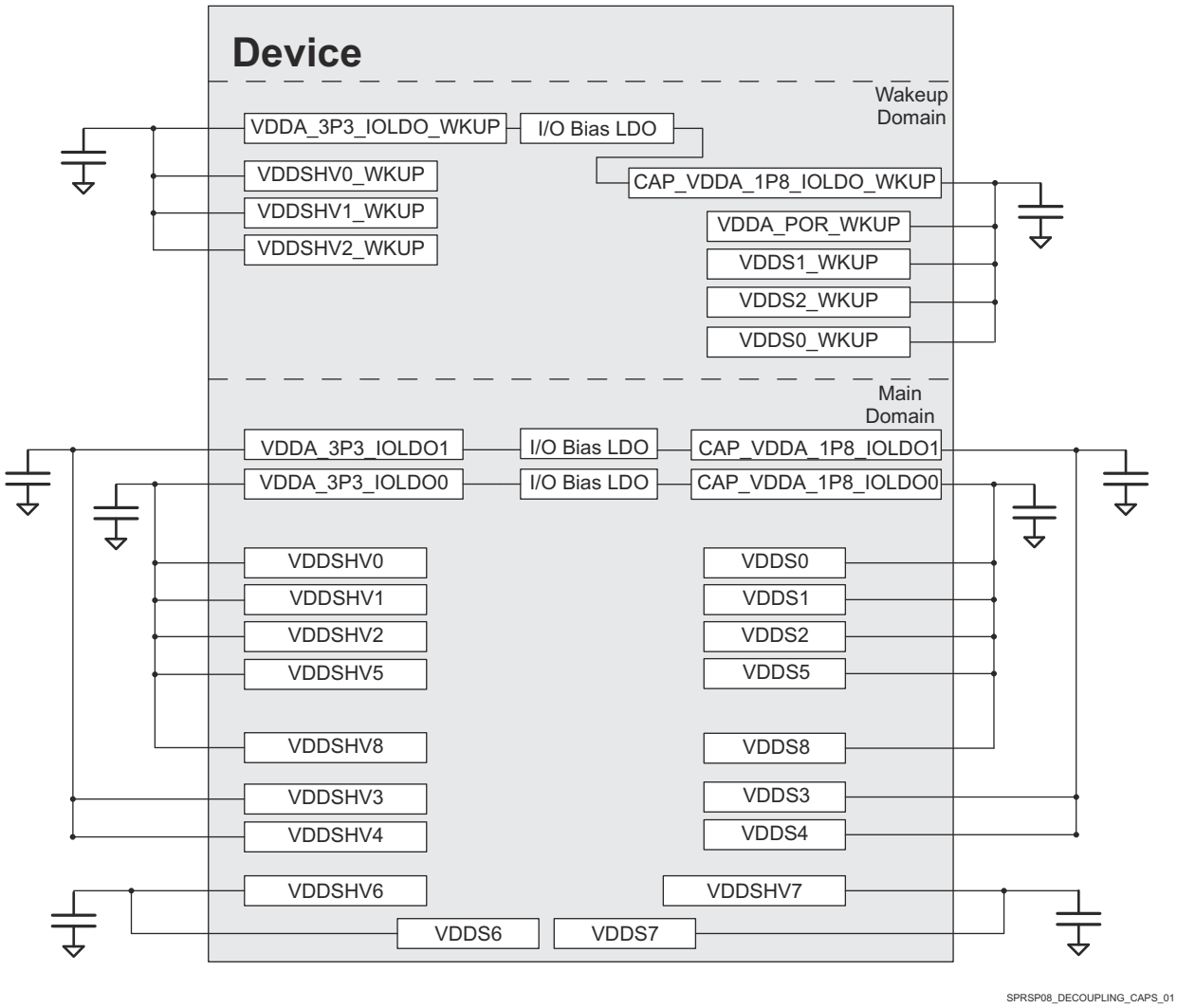

Figure 8-7. All VDDSHV[8:0], and VDDSHV[2:0]_WKUP Supplies Configured for 3.3 V Operation

Figure 8-8 shows all VDDSHV[8:0] and VDDSHV[2:0]_WKUP supplies configured for 1.8 V operation.

Copyright © 2023 Texas Instruments Incorporated

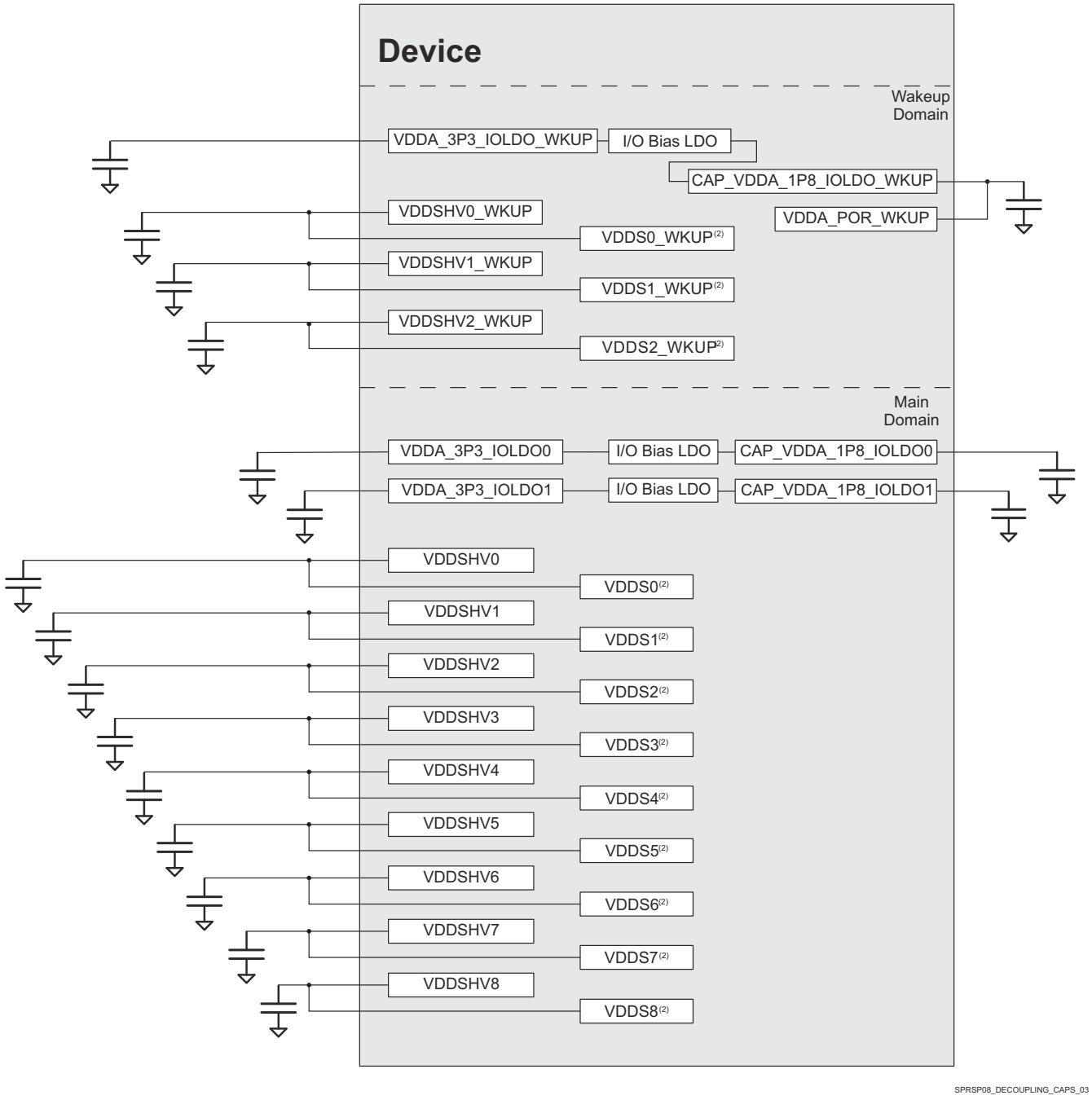

Figure 8-8. All VDDSHV[8:0] and VDDSHV[2:0]_WKUP Supplies Configured for 1.8V Operation

Copyright © 2023 Texas Instruments Incorporated

Figure 8-9 shows a split configuration where VDDSHV[0, 1, 2, 5, 8] and VDDSHV0_WKUP are configured for 3.3 V operation, while VDDSHV[3, 4, 6, 7] and VDDSHV[2:1]_WKUP are configured for 1.8 V operation. Note the colors indicate rails that are tied to the same source.

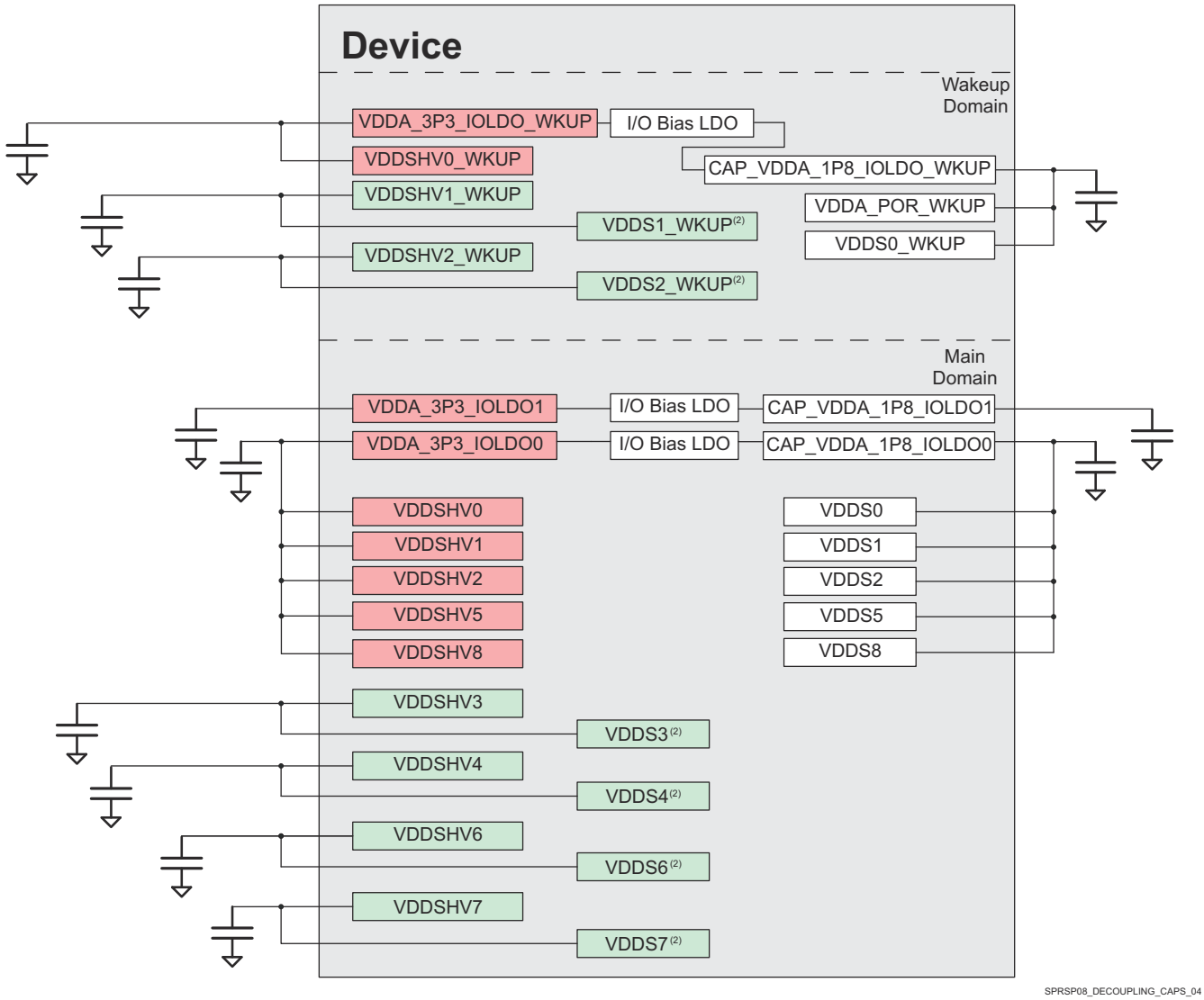

Figure 8-9. VDDSHV[8:0] and VDDSHV[2:0]_WKUP Supplies Configured for Combination of 1.8 V or 3.3 V Operation

Figure 8-10 through Figure 8-12 illustrates the system configuration when VDDSHV6 or VDDSHV7 is used as the MMCSD supply.

Copyright © 2023 Texas Instruments Incorporated

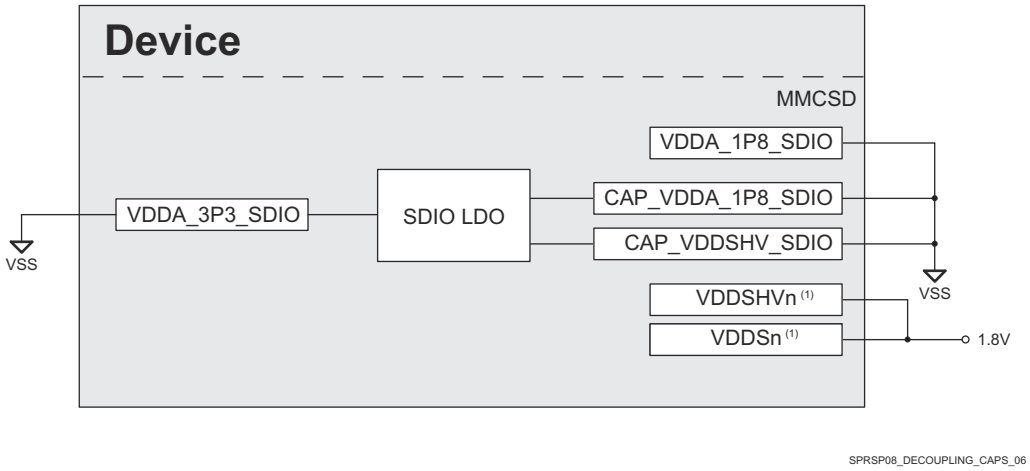

Figure 8-10. VDDSHV6 or VDDSHV7 Used as the MMCSD Supply for Fixed 1.8V IO

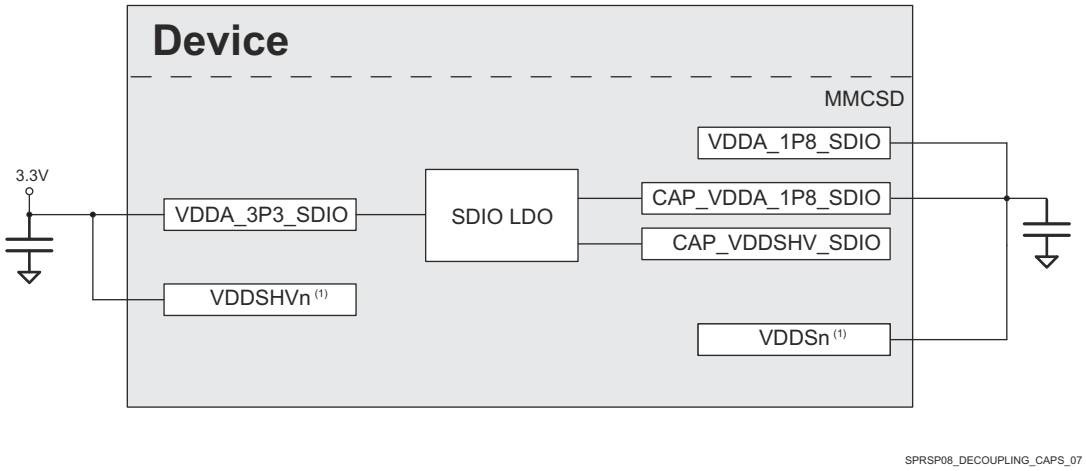

Figure 8-11. VDDSHV6 or VDDSHV7 Used as the MMCSD Supply for Fixed 3.3V IO

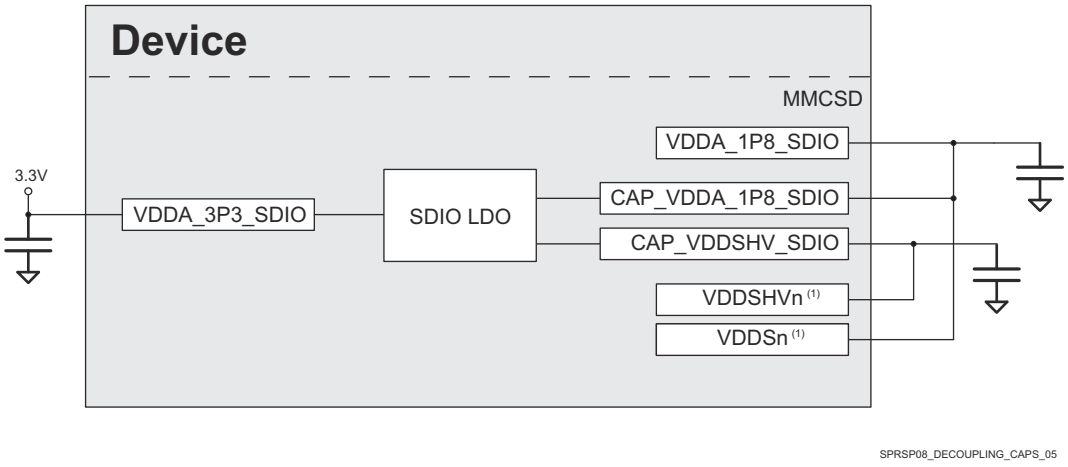

Figure 8-12. VDDSHV6 or VDDSHV7 Used as the MMCSD Supply for Dynamic 3.3V/1.8V IO

8.2.9 Thermal Solution Guidance

The Thermal Design Guide for DSP and Arm Application Processors Application Note provides guidance for successful implementation of a thermal solution for system designs containing this device. This document

Copyright © 2023 Texas Instruments Incorporated

provides background information on common terms and methods related to thermal solutions. TI only supports designs that follow system design guidelines contained in the application report.

Copyright © 2023 Texas Instruments Incorporated

9 Device and Documentation Support

TI offers an extensive line of development tools. Tools and software to evaluate the performance of the device, generate code, and develop solutions are listed below.

9.1 Device Nomenclature

To designate the stages in the product development cycle, TI assigns prefixes to the part numbers of all microprocessors (MPUs) and support tools. Each device has one of three prefixes: X, P, or null (no prefix) (for example, AM654x). Texas Instruments recommends two of three possible prefix designators for its support tools: TMDX and TMDS. These prefixes represent evolutionary stages of product development from engineering prototypes (TMDX) through fully qualified production devices and tools (TMDS).

Device development evolutionary flow:

X Experimental device that is not necessarily representative of the final device's electrical specifications and may not use production assembly flow.

P Prototype device that is not necessarily the final silicon die and may not necessarily meet final electrical specifications.

null Production version of the silicon die that is fully qualified.

Support tool development evolutionary flow:

TMDX Development-support product that has not yet completed Texas Instruments internal qualification testing.

TMDS Fully-qualified development-support product.

X and P devices and TMDX development-support tools are shipped against the following disclaimer:

"Developmental product is intended for internal evaluation purposes."

Production devices and TMDS development-support tools have been characterized fully, and the quality and reliability of the device have been demonstrated fully. TI's standard warranty applies.

Predictions show that prototype devices (X or P) have a greater failure rate than the standard production devices. Texas Instruments recommends that these devices not be used in any production system because their expected end-use failure rate still is undefined. Only qualified production devices are to be used.

For orderable part numbers of AM65xx devices in the ACD package type, see the Package Option Addendum of this document, the TI website (ti.com), or contact your TI sales representative.

Copyright © 2023 Texas Instruments Incorporated

9.1.1 Standard Package Symbolization

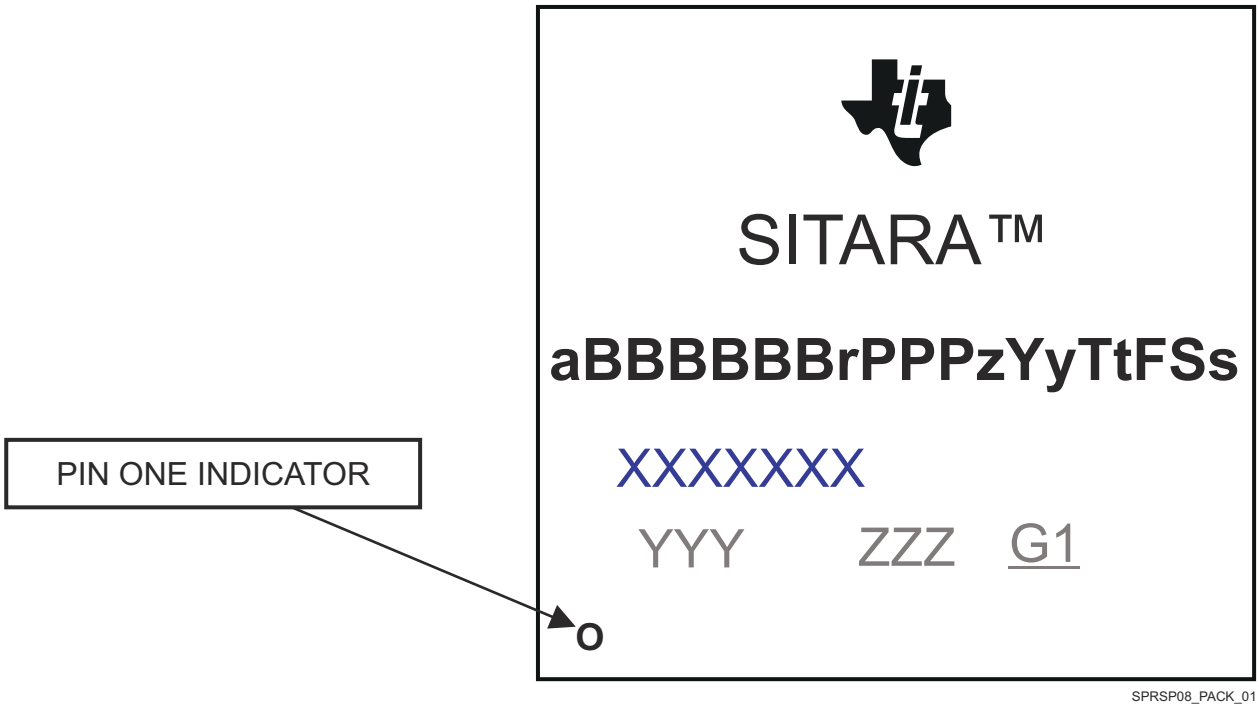

Figure 9-1. Printed Device Reference

9.1.2 Device Naming Convention

Table 9-1. Nomenclature Description

FIELD PARAMETER	FIELD DESCRIPTION	VALUE	DESCRIPTION
a	Device evolution stage	X	Prototype
		P	Preproduction (production test flow, no reliability data)
		BLANK	Production
BBBBBB	Base production part number	AM6548	Quad Core High Tier (See Table 4-1, *Device Comparison*)
		AM6528	Dual Core High Tier (See Table 4-1, *Device Comparison*)
		AM6546	Quad Core Low Tier (See Table 4-1, *Device Comparison*)
		AM6526	Dual Core Low Tier (See Table 4-1, *Device Comparison*)
r	Device revision	BLANK	SR 1.0
		A	SR 2.0
		B	SR 2.1
PPP	Package Designator	ACD	ACD FCBGA-N784 (23mm × 23mm) Package
z	Device Speed	X	High speed grade (see Table 6-1, *Speed Grade Maximum Frequency*)
		OTHER	Alternate speed grade
Yy	Device type	E	All industrial protocols enabled (basic protocols plus EtherCAT slave and POWERLINK slave)
		BLANK	Basic Industrial protocols enabled
Tt	Temperature (1)	A	Extended (see Section 6.4, *Recommended Operating Conditions*)
		BLANK	Commercial (see Section 6.4, *Recommended Operating Conditions*)
F	Functional Safety	BLANK	No safety features
		F	Safety features enabled including lock-step MCU

Copyright © 2023 Texas Instruments Incorporated

Table 9-1. Nomenclature Description (continued)

FIELD PARAMETER	FIELD DESCRIPTION	VALUE	DESCRIPTION
Ss	Security Identifier	S1	High-Security device, Secure Boot Supported
		SB	Dummy key High-Security device, Secure Boot Supported
		BLANK	General purpose device
XXXXXXX	Lot Trace Code (LTC)		
YYY	Production Code; For TI use only		
ZZZ	Production Code; For TI use only		
O	Pin one designator		
G1	ECAT—Green package designator		

(1) Applies to device max junction temperature.

Note

X6580ACD is a prototype part that is functionally equivalent to XAM6548ACDXEAF.

Note

BLANK in the symbol or part number is collapsed so there are no gaps between characters.

9.2 Tools and Software

The following products support development for AM65xx platforms:

Design kits and evaluation modules

AM65x evaluation module The AM65x Evaluation Module provides a platform to quickly start evaluation of Sitara™ Arm® Cortex®-A53 AM65x Processors (AM6548, AM6546, AM6528, AM6526) and accelerate development for HMI, networking, patient monitoring, and other industrial applications. It is a development platform based on the quad core Cortex-A53, dual Cortex-R5F processor that is integrated with ample connectivity such as PCIe, USB 3.0/2.0, Gigabit Ethernet, and more.

Development tools

Clock Tree Tool for Sitara, Automotive, Vision Analytics, & Digital Signal Processors The Clock Tree Tool (CTT) for Sitara™ Arm®, Automotive, and Digital Signal Processors is an interactive clock tree configuration software that provides information about the clocks and modules in these TI devices. It allows the user to:

- Visualize the device clock tree
- Interact with clock tree elements and view the effect on PRCM registers
- Interact with the PRCM registers and view the effect on the device clock tree
- View a trace of all the device registers affected by the user interaction with clock tree

Code Composer Studio™ (CCS) Integrated Development Environment (IDE) for Sitara Arm Processors Code Composer Studio is an integrated development environment (IDE) that supports TI's Microcontroller and Embedded Processors portfolio. Code Composer Studio comprises a suite of tools used to develop and debug embedded applications. It includes an optimizing C/C++ compiler, source code editor, project build environment, debugger, profiler, and many other features. The intuitive IDE provides a single user interface taking you through each step of the application development flow. Familiar tools and interfaces allow users to get started faster than ever before. Code Composer Studio combines the advantages of the Eclipse software framework with advanced embedded debug capabilities from TI resulting in a compelling feature-rich development environment for embedded developers.

Pin mux tool The Pin MUX Utility is a software tool which provides a Graphical User Interface for configuring pin multiplexing settings, resolving conflicts and specifying I/O cell characteristics for TI MPUs. Results are output as C header/code files that can be imported into software development kits (SDKs) or used to configure

Copyright © 2023 Texas Instruments Incorporated

customer's custom software. Version 4 of the Pin Mux utility adds the capability of automatically selecting a mux configuration that satisfies the entered requirements.

Models

AM654x/DRA80xM BSDL Model BSDL Model

AM654x/DRA80xM IBIS File IBIS Model

AM654x/DRA80xM Thermal Models Thermal Model

For a complete listing of development-support tools for the processor platform, visit the Texas Instruments website at ti.com. For information on pricing and availability, contact the nearest TI field sales office or authorized distributor.

9.3 Documentation Support

To receive notification of documentation updates, navigate to the device product folder on ti.com. Click on *Subscribe to updates* to register and receive a weekly digest of any product information that has changed. For change details, review the revision history included in any revised document.

The following documents describe the AM65xx devices.

Technical Reference Manual

AM65x/DRA80xM ProcessorsTechnical Reference Manual Details the integration, the environment, the functional description, and the programming models for each peripheral and subsystem in the AM65xx family of devices.

Errata

AM65x/DRA80xM Processors Silicon Revision 2.1/2.0/1.0 Silicon Errata Describes the known exceptions to the functional specifications for the device.

9.4 Support Resources

TI E2E™ support forums are an engineer's go-to source for fast, verified answers and design help — straight from the experts. Search existing answers or ask your own question to get the quick design help you need.

Linked content is provided "AS IS" by the respective contributors. They do not constitute TI specifications and do not necessarily reflect TI's views; see TI's Terms of Use.

9.5 Trademarks

I2C™ is a trademark of NXP Semiconductors.
HyperBus™ is a trademark of Mobiveil Inc.
Multimedia Card™, MMC™, and eMMC™ are trademarks of MultiMediaCard Association.
Sitara™ and Code Composer Studio™ are trademarks of TI.
Neon™ is a trademark of Arm Limited (or its subsidiaries) in the US and/or elsewhere.
I2C BUS™ is a trademark of NXP Semiconductor.
TI E2E™ is a trademark of Texas Instruments.
Arm®, Cortex®, TrustZone®, and CoreSight® are registered trademarks of Arm Limited (or its subsidiaries) in the US and/or elsewhere.
MIPI® is a registered trademark of MIPI Alliance, Inc.
PowerVR® is a registered trademark of Imagination Technologies Limited.
PCI-Express® and PCIe® are registered trademarks of PCI-SIG.
Secure Digital® and SD® are registered trademarks of SD Card Association.
EtherCAT® is a registered trademark of Beckhoff Automation GmbH.
All trademarks are the property of their respective owners.

Copyright © 2023 Texas Instruments Incorporated

9.6 Electrostatic Discharge Caution



This integrated circuit can be damaged by ESD. Texas Instruments recommends that all integrated circuits be handled with appropriate precautions. Failure to observe proper handling and installation procedures can cause damage.

ESD damage can range from subtle performance degradation to complete device failure. Precision integrated circuits may be more susceptible to damage because very small parametric changes could cause the device not to meet its published specifications.

9.7 Glossary

TI Glossary — This glossary lists and explains terms, acronyms, and definitions.

10 Revision History

Changes from June 30, 2021 to September 15, 2023 (from Revision B (June 2021) to Revision C (September 2023)) **Page**

- **Global:** Moved the Revision History section to the back of the document....1
- (Features): Updated/Changed the "Functional Safety-Compliant" feature bullets and added the ulink to the "Safety-related certification"....1
- (Package Information): Updated table title and the table to match the new content standard....4

Copyright © 2023 Texas Instruments Incorporated

11 Mechanical, Packaging, and Orderable Information

11.1 Packaging Information

The following pages include mechanical, packaging, and orderable information. This information is the most current data available for the designated devices. This data is subject to change without notice and revision of this document. For browser-based versions of this data sheet, refer to the left-hand navigation.

Copyright © 2023 Texas Instruments Incorporated

PACKAGING INFORMATION

Orderable part number	Status (1)	Material type (2)	Package | Pins	Package qty | Carrier	RoHS (3)	Lead finish/ Ball material (4)	MSL rating/ Peak reflow (5)	Op temp (°C)	Part marking (6)
AM6526BACDXA	Active	Production	FCCSP (ACD) | 784	60 | JEDEC TRAY (5+1)	Yes	Call TI	Level-3-250C-168 HR	-40 to 105	AM6526BACDXA 900 900 ACD
AM6526BACDXA.B	Active	Production	FCCSP (ACD) | 784	60 | JEDEC TRAY (5+1)	Yes	Call TI	Level-3-250C-168 HR	-40 to 105	AM6526BACDXA 900 900 ACD
AM6526BACDXEAF	Active	Production	FCCSP (ACD) | 784	60 | JEDEC TRAY (5+1)	Yes	Call TI	Level-3-250C-168 HR	-40 to 105	AM6526BACDXEAF 900 900 ACD
AM6526BACDXEAF.B	Active	Production	FCCSP (ACD) | 784	60 | JEDEC TRAY (5+1)	Yes	Call TI	Level-3-250C-168 HR	-40 to 105	AM6526BACDXEAF 900 900 ACD
AM6528BACDXEA	Active	Production	FCCSP (ACD) | 784	60 | JEDEC TRAY (5+1)	Yes	Call TI	Level-3-250C-168 HR	-40 to 105	AM6528BACDXEA 900 900 ACD
AM6528BACDXEA.B	Active	Production	FCCSP (ACD) | 784	60 | JEDEC TRAY (5+1)	Yes	Call TI	Level-3-250C-168 HR	-40 to 105	AM6528BACDXEA 900 900 ACD
AM6546BACDXA	Active	Production	FCCSP (ACD) | 784	60 | JEDEC TRAY (5+1)	Yes	Call TI	Level-3-250C-168 HR	-40 to 105	AM6546BACDXA 900 900 ACD
AM6546BACDXA.B	Active	Production	FCCSP (ACD) | 784	60 | JEDEC TRAY (5+1)	Yes	Call TI	Level-3-250C-168 HR	-40 to 105	AM6546BACDXA 900 900 ACD
AM6548BACDXEAF	Active	Production	FCCSP (ACD) | 784	60 | JEDEC TRAY (5+1)	Yes	Call TI	Level-3-250C-168 HR	-40 to 105	AM6548BACDXEAF 900 900 ACD
AM6548BACDXEAF.B	Active	Production	FCCSP (ACD) | 784	60 | JEDEC TRAY (5+1)	Yes	Call TI	Level-3-250C-168 HR	-40 to 105	AM6548BACDXEAF 900 900 ACD

(1) **Status:** For more details on status, see our product life cycle.

(2) **Material type:** When designated, preproduction parts are prototypes/experimental devices, and are not yet approved or released for full production. Testing and final process, including without limitation quality assurance, reliability performance testing, and/or process qualification, may not yet be complete, and this item is subject to further changes or possible discontinuation. If available for ordering, purchases will be subject to an additional waiver at checkout, and are intended for early internal evaluation purposes only. These items are sold without warranties of any kind.

(3) **RoHS values:** Yes, No, RoHS Exempt. See the TI RoHS Statement for additional information and value definition.

(4) **Lead finish/Ball material:** Parts may have multiple material finish options. Finish options are separated by a vertical ruled line. Lead finish/Ball material values may wrap to two lines if the finish value exceeds the maximum column width.

(5) **MSL rating/Peak reflow:** The moisture sensitivity level ratings and peak solder (reflow) temperatures. In the event that a part has multiple moisture sensitivity ratings, only the lowest level per JEDEC standards is shown. Refer to the shipping label for the actual reflow temperature that will be used to mount the part to the printed circuit board.

(6) **Part marking:** There may be an additional marking, which relates to the logo, the lot trace code information, or the environmental category of the part.

Multiple part markings will be inside parentheses. Only one part marking contained in parentheses and separated by a "~" will appear on a part. If a line is indented then it is a continuation of the previous line and the two combined represent the entire part marking for that device.

Important Information and Disclaimer: The information provided on this page represents TI's knowledge and belief as of the date that it is provided. TI bases its knowledge and belief on information provided by third parties, and makes no representation or warranty as to the accuracy of such information. Efforts are underway to better integrate information from third parties. TI has taken and continues to take reasonable steps to provide representative and accurate information but may not have conducted destructive testing or chemical analysis on incoming materials and chemicals. TI and TI suppliers consider certain information to be proprietary, and thus CAS numbers and other limited information may not be available for release.

In no event shall TI's liability arising out of such information exceed the total purchase price of the TI part(s) at issue in this document sold by TI to Customer on an annual basis.

TRAY

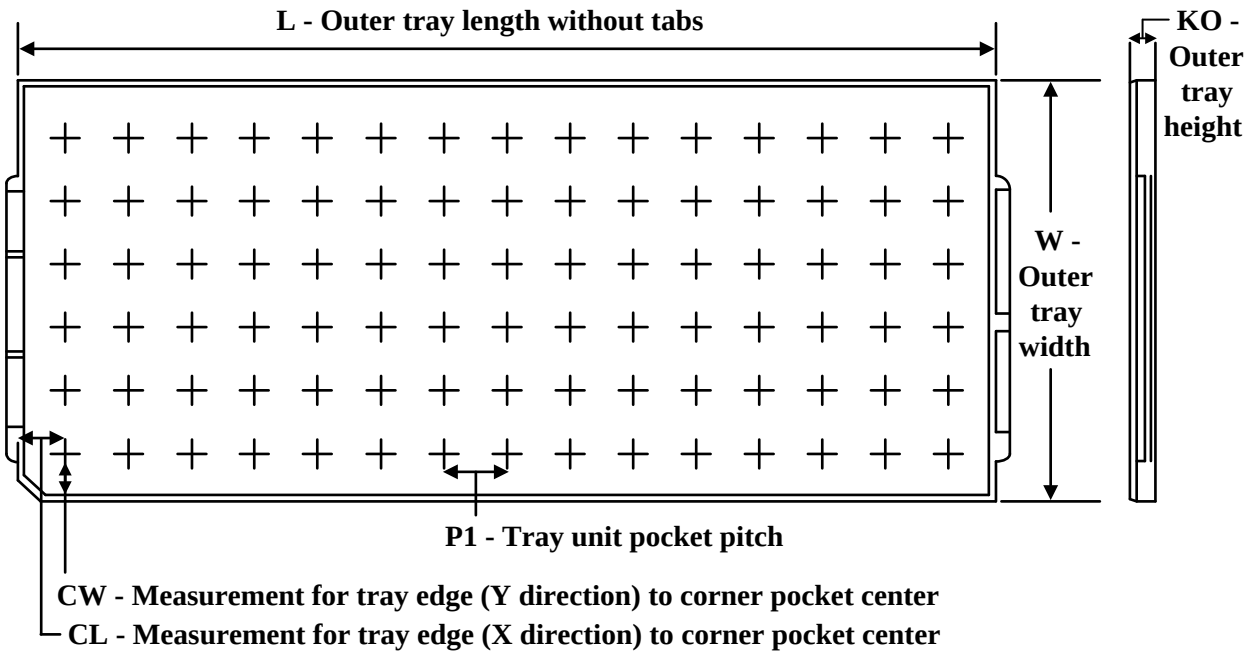

Chamfer on Tray corner indicates Pin 1 orientation of packed units.

*All dimensions are nominal

Device	Package Name	Package Type	Pins	SPQ	Unit array matrix	Max temperature (°C)	L (mm)	W (mm)	K0 (µm)	P1 (mm)	CL (mm)	CW (mm)
AM6526BACDXA	ACD	FCCSP	784	60	5 x 12	150	322.6	135.9	7620	25.5	17.25	16.95
AM6526BACDXA.B	ACD	FCCSP	784	60	5 x 12	150	322.6	135.9	7620	25.5	17.25	16.95
AM6526BACDXEAF	ACD	FCCSP	784	60	5 x 12	150	322.6	135.9	7620	25.5	17.25	16.95
AM6526BACDXEAF.B	ACD	FCCSP	784	60	5 x 12	150	322.6	135.9	7620	25.5	17.25	16.95
AM6528BACDXEA	ACD	FCCSP	784	60	5 x 12	150	322.6	135.9	7620	25.5	17.25	16.95
AM6528BACDXEA.B	ACD	FCCSP	784	60	5 x 12	150	322.6	135.9	7620	25.5	17.25	16.95
AM6546BACDXA	ACD	FCCSP	784	60	5 x 12	150	322.6	135.9	7620	25.5	17.25	16.95
AM6546BACDXA.B	ACD	FCCSP	784	60	5 x 12	150	322.6	135.9	7620	25.5	17.25	16.95
AM6548BACDXEAF	ACD	FCCSP	784	60	5 x 12	150	322.6	135.9	7620	25.5	17.25	16.95
AM6548BACDXEAF.B	ACD	FCCSP	784	60	5 x 12	150	322.6	135.9	7620	25.5	17.25	16.95

PACKAGE OUTLINE

ACD0784A

FCBGA - 1.63 mm max height

BALL GRID ARRAY

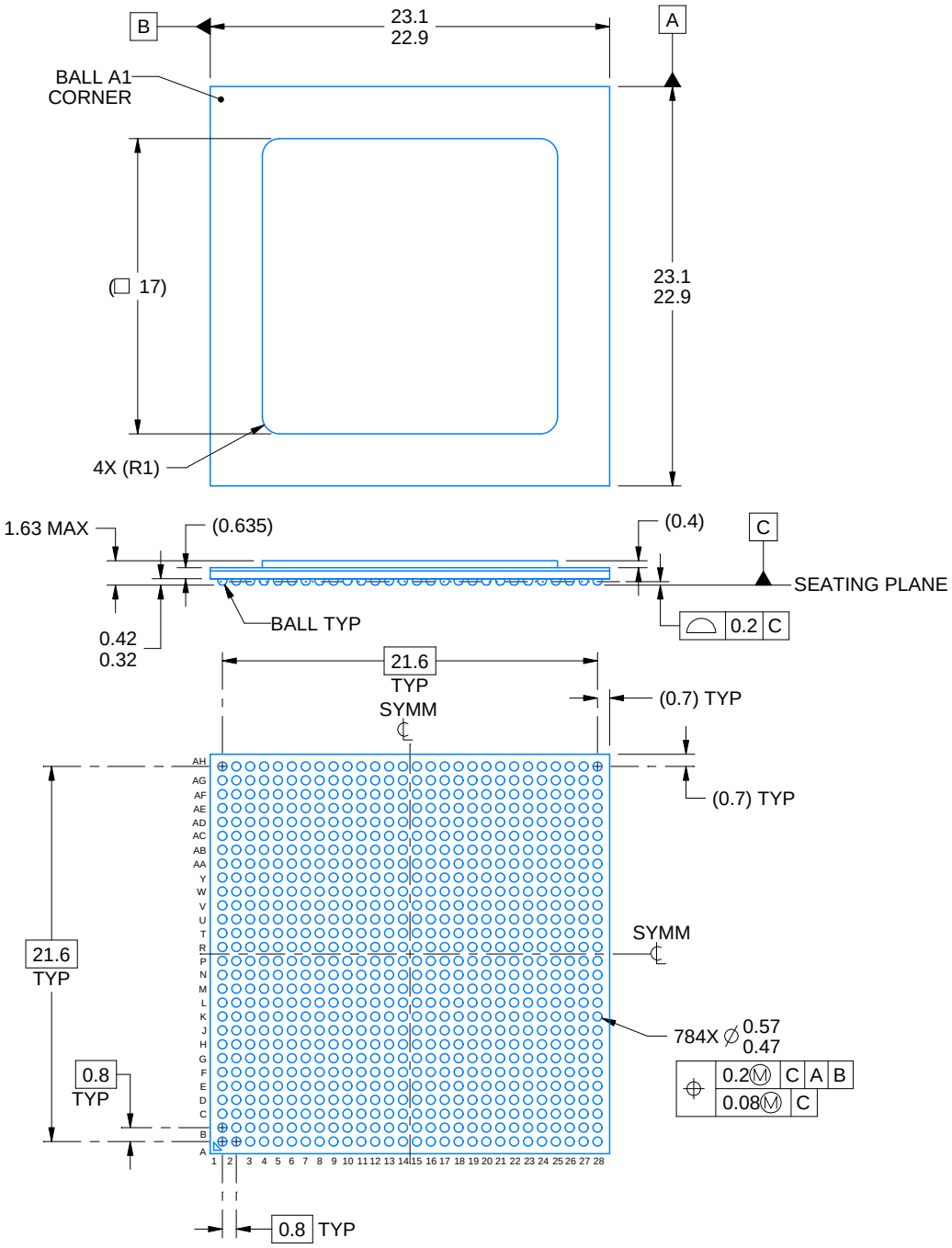

NOTES:

1. All linear dimensions are in millimeters. Any dimensions in parenthesis are for reference only. Dimensioning and tolerancing per ASME Y14.5M.
2. This drawing is subject to change without notice.

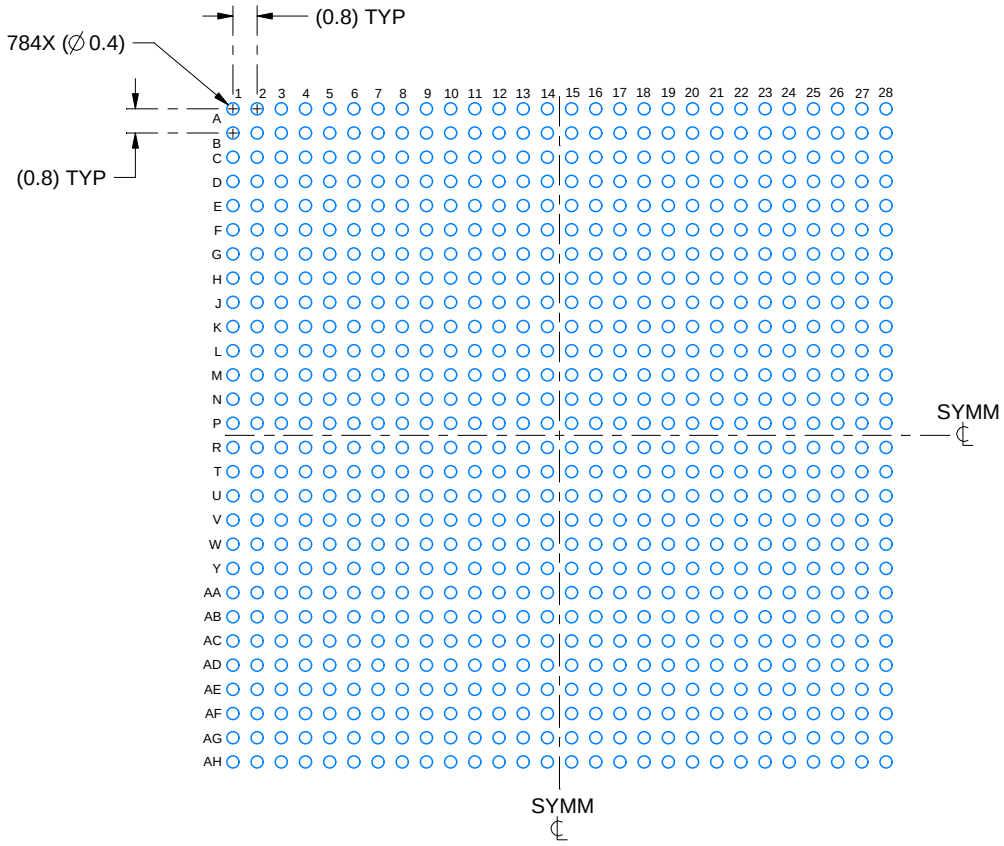

LAND PATTERN EXAMPLE
EXPOSED METAL SHOWN
SCALE: 4X

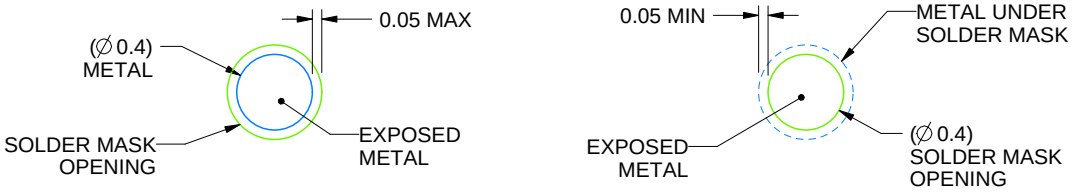

SOLDER MASK DETAILS
NOT TO SCALE

4223579/B 01/2019

NOTES: (continued)

3. Final dimensions may vary due to manufacturing tolerance considerations and also routing constraints.
See Texas Instruments Literature No. SPRU811 (www.ti.com/lit/spru811).

EXAMPLE STENCIL DESIGN

ACD0784A

FCBGA - 1.63 mm max height

BALL GRID ARRAY

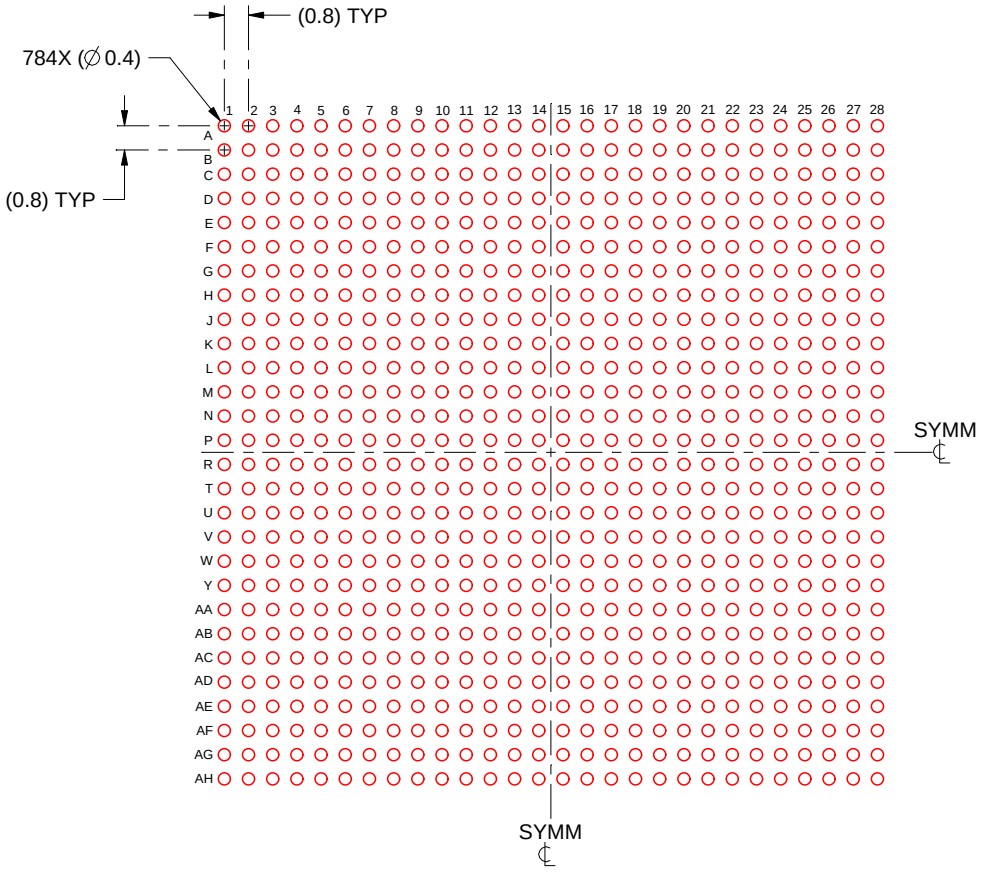

SOLDER PASTE EXAMPLE
BASED ON 0.15 mm THICK STENCIL
SCALE: 4X

4223579/B 01/2019

NOTES: (continued)

4. Laser cutting apertures with trapezoidal walls and rounded corners may offer better paste release.

IMPORTANT NOTICE AND DISCLAIMER

TI PROVIDES TECHNICAL AND RELIABILITY DATA (INCLUDING DATASHEETS), DESIGN RESOURCES (INCLUDING REFERENCE DESIGNS), APPLICATION OR OTHER DESIGN ADVICE, WEB TOOLS, SAFETY INFORMATION, AND OTHER RESOURCES “AS IS” AND WITH ALL FAULTS, AND DISCLAIMS ALL WARRANTIES, EXPRESS AND IMPLIED, INCLUDING WITHOUT LIMITATION ANY IMPLIED WARRANTIES OF MERCHANTABILITY, FITNESS FOR A PARTICULAR PURPOSE OR NON-INFRINGEMENT OF THIRD PARTY INTELLECTUAL PROPERTY RIGHTS.

These resources are intended for skilled developers designing with TI products. You are solely responsible for (1) selecting the appropriate TI products for your application, (2) designing, validating and testing your application, and (3) ensuring your application meets applicable standards, and any other safety, security, regulatory or other requirements.

These resources are subject to change without notice. TI grants you permission to use these resources only for development of an application that uses the TI products described in the resource. Other reproduction and display of these resources is prohibited. No license is granted to any other TI intellectual property right or to any third party intellectual property right. TI disclaims responsibility for, and you fully indemnify TI and its representatives against any claims, damages, costs, losses, and liabilities arising out of your use of these resources.

TI’s products are provided subject to TI’s Terms of Sale, TI’s General Quality Guidelines, or other applicable terms available either on ti.com or provided in conjunction with such TI products. TI’s provision of these resources does not expand or otherwise alter TI’s applicable warranties or warranty disclaimers for TI products. Unless TI explicitly designates a product as custom or customer-specified, TI products are standard, catalog, general purpose devices.

TI objects to and rejects any additional or different terms you may propose.

Copyright © 2026, Texas Instruments Incorporated

Last updated 10/2025

Looking for pricing, stock, or lifecycle information?

Click below to explore more details on WIN SOURCE:

- View AM6526BACDXEAF on WIN SOURCE
- Texas Instruments Information

Optimize Your Supply Chain with WIN SOURCE Solutions

- Global Sourcing Solution
- Obsolete Management
- Cost Control Management
- Shortage Management
- Alternative Solution
- Excess Inventory Management