WINSOURCE ELECTRONICS

THE DATASHEET OF

66AK2H12BXAAW2

66AK2Hxx Multicore DSP+ARM® KeyStone™ II System-on-Chip (SoC)

1 Device Overview

1.1 Features

- Eight TMS320C66x DSP Core Subsystems (C66x CorePacs), Each With
  - 1.0 GHz or 1.2 GHz C66x Fixed- and Floating-Point DSP Core
    - 38.4 GMacs/Core for Fixed Point @ 1.2 GHz
    - 19.2 GFlops/Core for Floating Point @ 1.2 GHz
  - Memory
    - 32-KB L1P Per CorePac
    - 32-KB L1D Per CorePac
    - 1024-KB Local L2 Per CorePac
- ARM CorePac
  - Four ARM® Cortex®-A15 MPCore™ Processors at up to 1.4 GHz
  - 4MB of L2 Cache Memory Shared by Four ARM Cores
  - Full Implementation of ARMv7-A Architecture Instruction Set
  - 32-KB L1 Instruction and Data Caches per Core
  - AMBA 4.0 AXI Coherency Extension (ACE) Master Port, Connected to MSMC for Low-Latency Access to Shared MSMC SRAM
- Multicore Shared Memory Controller (MSMC)
  - 6MB of MSM SRAM Memory Shared by Eight DSP CorePacs and One ARM CorePac
  - Memory Protection Unit (MPU) for Both MSM SRAM and DDR3_EMIF
- Multicore Navigator
  - 16k Multipurpose Hardware Queues With Queue Manager
  - Packet-Based DMA for Zero-Overhead Transfers
- Network Coprocessor
  - Packet Accelerator Enables Support for
    - Transport Plane IPsec, GTP-U, SCTP, PDCP
    - L2 User Plane PDCP (RoHC, Air Ciphering)
    - 1-Gbps Wire Speed Throughput at 1.5 MPackets Per Second
  - Security Accelerator Engine Enables Support for
    - IPSec, SRTP, 3GPP, and WiMAX Air Interface, and SSL/TLS Security
    - ECB, CBC, CTR, F8, A5/3, CCM, GCM, HMAC, CMAC, GMAC, AES, DES, 3DES, Kasumi, SNOW 3G, SHA-1, SHA-2 (256-Bit Hash), MD5
    - Up to 2.4 Gbps IPSec and 2.4 Gbps Air Ciphering
  - Ethernet Subsystem
    - Five-Port Switch (Four SGMII Ports)
- Peripherals
  - Four Lanes of SRIO 2.1
    - Supports up to 5 GBaud
    - Supports Direct I/O, Message Passing
  - Two Lanes PCIe Gen2
    - Supports up to 5 GBaud
  - Two HyperLinks
    - Supports Connections to Other KeyStone™ Architecture Devices Providing Resource Scalability
    - Supports up to 50 GBaud
  - 10-Gigabit Ethernet (10-GbE) Switch Subsystem (66AK2H14 Only)
    - Two XFI Ports
    - IEEE 1588 Support
  - Five Enhanced Direct Memory Access (EDMA) Modules
  - Two 72-Bit DDR3/DDR3L Interfaces With Speeds up to 1600 MHz
  - EMIF16 Interface
  - USB 3.0
  - Two UART Interfaces
  - Three I^2C Interfaces
  - 32 GPIO Pins
  - Three SPI Interfaces
  - Semaphore Module
  - 64-Bit Timers
    - Twenty 64-Bit Timers for 66AK2H14 and 66AK2H12
    - Fourteen 64-Bit Timers for 66AK2H06
  - Five On-Chip PLLs
- Commercial Case Temperature:
  - 0ºC to 85ºC
- Extended Case Temperature:
  - –40ºC to 100ºC

An IMPORTANT NOTICE at the end of this data sheet addresses availability, warranty, changes, use in safety-critical applications, intellectual property matters and other important disclaimers. PRODUCTION DATA.

1.2 Applications

- Mission Critical
- Computing
- Communications
- Audio
- Video Infrastructure
- Imaging
- Analytics
- Networking
- Media Processing

1.3 Description

The 66AK2Hxx platform combines the quad ARM Cortex-A15 processor with up to eight TMS320C66x high-performance DSPs using the KeyStone II architecture. The 66AK2H14/12/06 device provides up to 5.6 GHz of ARM and 9.6 GHz of DSP processing coupled with security, packet processing, and Ethernet switching at lower power than multichip solutions. The 66AK2H14/12/06 device is optimal for embedded infrastructure applications like cloud computing, media processing, high-performance computing, transcoding, security, gaming, analytics, and virtual desktop.

The C66x core combines fixed-point and floating-point computational capability in the processor without sacrificing speed, size, or power consumption. The raw computational performance is 38.4 GMACS/core and 19.2 Gflops/core (@ 1.2 GHz operating frequency). The C66x is also 100% backward compatible with software for C64x+ devices. The C66x core incorporates 90 new instructions targeted for floating point (FPi) and vector math oriented (VPi) processing.

The 66AK2H14/12/06 device has a complete set of development tools that includes: a C compiler, an assembly optimizer to simplify programming and scheduling, and a Windows® debugger interface for visibility into source code execution.

1.3.1 Enhancements in KeyStone II

The KeyStone II architecture provides many major enhancements over the previous KeyStone I generation of devices. The KeyStone II architecture integrates a Cortex-A15 processor quad-core cluster. The external memory bandwidth has been doubled with the integration of dual DDR3 1600 EMIFs. MSMC internal memory bandwidth is quadrupled with MSMC architecture improvements such as cache coherency. MSMC also enbles memories to operate at the speed of the processor cores, which reduces latency and contention while providing high-bandwidth interconnections between processor cores and shared internal and external memory. Multicore Navigator supports twice the number of queues, descriptors, and packet DMA, four times the number of micro RISC engines, and a significant increase in the number of push/pops per second compared to the previous generation. The new peripherals that have been added include the USB 3.0 controller, and asynchronous EMIF controller for NAND/NOR memory access. The 3-port Gigabit Ethernet switch in KeyStone I has been replaced with a 5-port Gigabit Ethernet switch in KeyStone II. Time synchronization support has been enhanced to reduce software workload and support additional standards like IEEE 1588 Annex D/E and SyncE. The number of GPIOs and serial interface peripherals, like I^2C and SPI, have been increased to enable more board-level control functionality.

Device Information(1)

PART NUMBER	PACKAGE	BODY SIZE
66AK2H14	AAW	40.0 mm × 40.0 mm
66AK2H12	AAW	40.0 mm × 40.0 mm
66AK2H06	AAW	40.0 mm × 40.0 mm

(1) For more information, see Section 13, *Mechanical, Packaging, and Orderable Information*.

Copyright © 2012–2017, Texas Instruments Incorporated

1.4 Functional Block Diagram

Figure 1-1, Figure 1-2, and Figure 1-3 show the functional block diagrams of the devices.

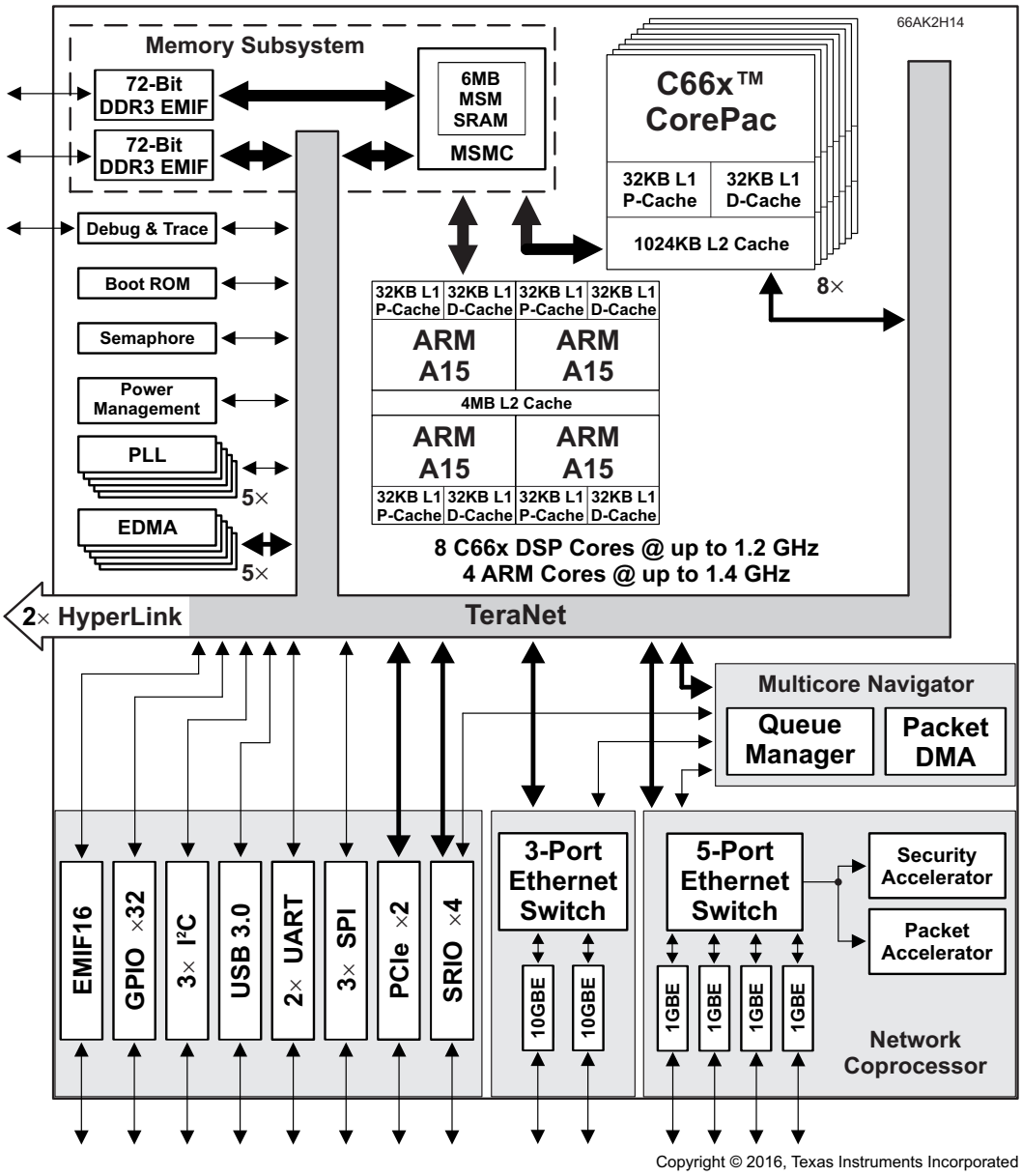

Figure 1-1. Functional Block Diagram for 66AK2H14

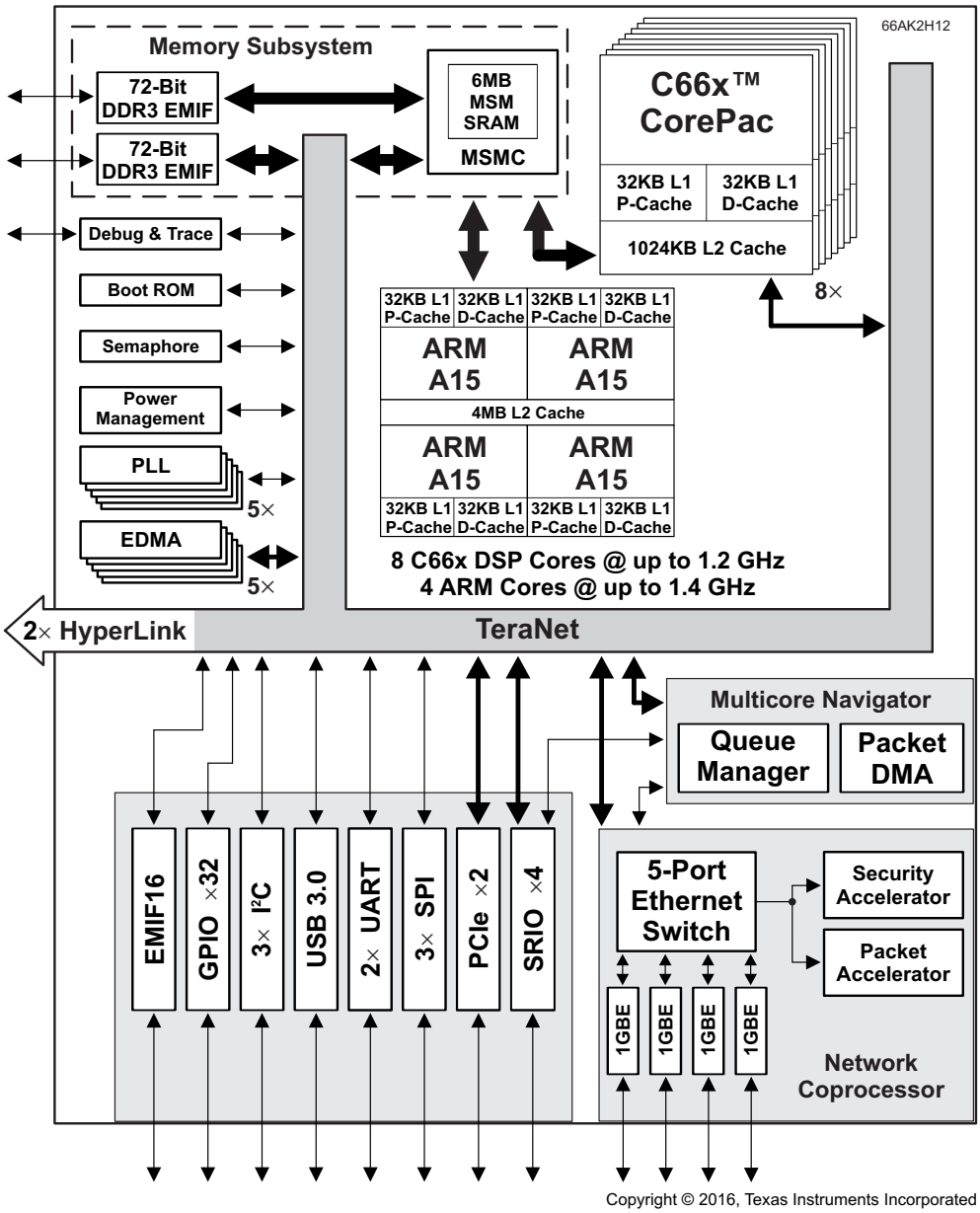

Figure 1-2. Functional Block Diagram for 66AK2H12

Copyright © 2012–2017, Texas Instruments Incorporated

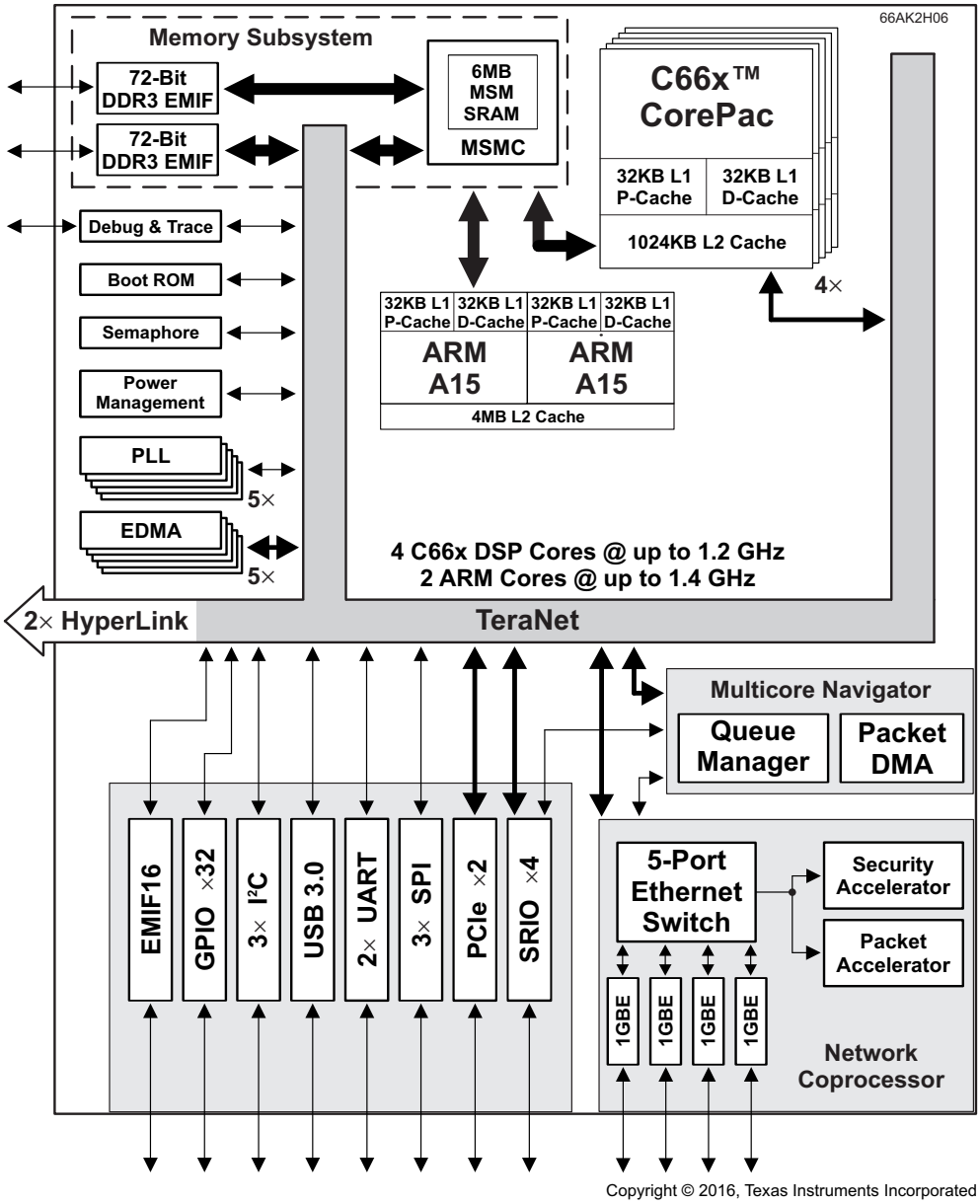

Figure 1-3. Functional Block Diagram for 66AK2H06

Table of Contents

1 Device Overview 1
1.1 Features 1
1.2 Applications 2
1.3 Description 2
1.4 Functional Block Diagram 3
2 Revision History 7
3 Device Comparison 8
3.1 Related Products 9
4 Terminal Configuration and Functions 10
4.1 Package Terminals 10
4.2 Pin Map 10
4.3 Terminal Functions 15
4.4 Pullup/Pulldown Resistors 50
5 Specifications 52
5.1 Absolute Maximum Ratings 52
5.2 ESD Ratings 52
5.3 Recommended Operating Conditions 53
5.4 Power Consumption Summary 53
5.5 Electrical Characteristics 54
5.6 Thermal Resistance Characteristics for PBGA Package [AAW] 54
5.7 Power Supply to Peripheral I/O Mapping 55
6 C66x CorePac 56
6.1 C66x DSP CorePac 57

Copyright © 2012–2017, Texas Instruments Incorporated

6.2 Memory Architecture 57
6.3 Memory Protection 60
6.4 Bandwidth Management 61
6.5 Power-Down Control 61
6.6 C66x CorePac Revision 62
6.7 C66x CorePac Register Descriptions 62
7 ARM CorePac 63
7.1 Features 65
7.2 System Integration 65
7.3 ARM Cortex-A15 Processor 65
7.4 CFG Connection 67
7.5 Main TeraNet Connection 67
7.6 Clocking and Reset 68
8 Memory, Interrupts, and EDMA for 66AK2Hxx 69
8.1 Memory Map Summary for 66AK2Hxx 69
8.2 Memory Protection Unit (MPU) for 66AK2Hxx 79
8.3 Interrupts for 66AK2Hxx 93
8.4 Enhanced Direct Memory Access (EDMA3) Controller for 66AK2Hxx 157
9 System Interconnect 168
9.1 Internal Buses and Switch Fabrics 168
9.2 Switch Fabric Connections Matrix - Data Space 168
9.3 TeraNet Switch Fabric Connections Matrix - Configuration Space 175
9.4 Bus Priorities 181
10 Device Boot and Configuration 182
10.1 Device Boot 182
10.2 Device Configuration 206
11 66AK2Hxx Peripheral Information 237
11.1 Recommended Clock and Control Signal Transition Behavior 237
11.2 Power Supplies 237
11.3 Power Sleep Controller (PSC) 245
11.4 Reset Controller 251
11.5 Main PLL, ARM PLL, DDR3A PLL, DDR3B PLL, PASS PLL and the PLL Controllers 257
11.6 DDR3A PLL and DDR3B PLL 272
11.7 PASS PLL 275
11.8 External Interrupts 277
11.9 DDR3A and DDR3B Memory Controllers 278
11.10 I^2C Peripheral 280
11.11 SPI Peripheral 284
11.12 HyperLink Peripheral 287
11.13 UART Peripheral 289
11.14 PCIe Peripheral 290
11.15 Packet Accelerator 290
11.16 Security Accelerator 291
11.17 Network Coprocessor Gigabit Ethernet (GbE) Switch Subsystem 291
11.18 SGMII and XFI Management Data Input/Output (MDIO) 292
11.19 Ten-Gigabit Ethernet (10GbE) Switch Subsystem 294
11.20 Timers 294
11.21 Serial RapidIO (SRIO) Port 295
11.22 General-Purpose Input/Output (GPIO) 296
11.23 Semaphore2 297
11.24 Universal Serial Bus 3.0 (USB 3.0) 297
11.25 EMIF16 Peripheral 297
11.26 Emulation Features and Capability 300
11.27 Debug Port (EMUx) 303
12 Device and Documentation Support 312
12.1 Device Nomenclature 312
12.2 Tools and Software 314
12.3 Documentation Support 315
12.4 Related Links 321
12.5 Community Resources 321
12.6 Trademarks 321
12.7 Electrostatic Discharge Caution 321
12.8 Glossary 321
13 Mechanical, Packaging, and Orderable Information 322
13.1 Packaging Information 322

Copyright © 2012–2017, Texas Instruments Incorporated

2 Revision History

NOTE: Page numbers for previous revisions may differ from page numbers in the current version.

Changes from Revision F (June 2017) to Revision G	Page
• Added DDR3L Interface to Features.	1
• Updated DVDD15 power supply in Terminal Functions — Power and Ground table from 1.5 V to 1.35/1.5 V.	32
• Updated DVDD15 entry in Recommended Operating Conditions table.	53
• Updated DVDD15 power supply in Power Supply to Peripheral I/O Mapping table, from 1.5 V to 1.35/1.5 V.	55
• Added DSP Boot Address Register (DSP_BOOT_ADDRn).	213
• Updated DVDD15 value in Power Supply Rails table from 1.5 V to 1.35/1.5V.	237
• Updated DDR3 value in DDR3 Memory Controller Device-Specific Information section from 1.5-V to 1.35-V / 1.5-V.	278
• Updated Timers Device-Specific Information section.	294

Copyright © 2012–2017, Texas Instruments Incorporated

3 Device Comparison

Table 3-1 provides a comparison of the 66AK2Hxx devices. The table lists the significant features of the devices, including the capacity of on-chip RAM, the peripherals, the CPU frequency, and the package type with pin count.

Table 3-1. Device Features Comparison

HARDWARE FEATURES		66AK2H14	66AK2H12	66AK2H06
Cores	C66x DSP	8	8	4
	ARM Cortex-A15 MPCore	4	4	2
Peripherals	10-GbE	2	–	–
	DDR3 memory controller (72-bit bus width)	2	2	2
	16-bit ASYNC EMIF	1	1	1
	EDMA3 (64 independent channels)	5	5	5
	High-speed 1×/2×/4× Serial RapidIO port (4 lanes)	1	1	1
	HyperLink (4 lanes)	2	2	2
	I^2C	3	3	3
	SPI	3	3	3
	PCIe (2 lanes)	1	1	1
	USB 3.0	1	1	1
	UART	2	2	2
	10/100/1000 Ethernet	4	4	4
	Management Data Input/Output (MDIO)	1	1	1
	64-bit timers (configurable)	Twenty 64-bit ***or*** Forty 32-bit	Twenty 64-bit ***or*** Forty 32-bit	Fourteen 64-bit ***or*** Twenty Eight 32-bit
	General-Purpose Input/Output port (GPIO)	32	32	32
Accelerators	Packet Accelerator	1	1	1
	Security Accelerator(1)	1	1	1
On-Chip Memory Organization	L1 program memory controller (C66x)	32KB per CorePac	32KB per CorePac	32KB per CorePac
	L1 data memory controller (C66x)	32KB per CorePac	32KB per CorePac	32KB per CorePac
	Shared L2 cache (C66x)	8192KB	8192KB	4096KB
	L3 ROM (C66x)	128KB	128KB	128KB
	L1 program memory controller (ARM Cortex-A15)	32KB per CorePac	32KB per CorePac	32KB per CorePac
	L1 data memory controller (ARM Cortex-A15)	32KB per CorePac	32KB per CorePac	32KB per CorePac
	Shared L2 cache (ARM Cortex-A15)	4096KB	4096KB	4096KB
	L3 ROM (ARM Cortex-A15)	256KB	256KB	256KB
	MSMC	6MB	6MB	6MB
C66x CorePac Revision ID	CorePac Revision ID Register (address location: 0181 2000h)	0x0009_0000 (PG 1.0) 0x0009_0002 (PG 1.1) 0x0009_0003 (PG 2.0) 0x0009_0003 (PG 3.0) 0x0009_0003 (PG 3.1)	0x0009_0000 (PG 1.0) 0x0009_0002 (PG 1.1) 0x0009_0003 (PG 2.0) 0x0009_0003 (PG 3.0) 0x0009_0003 (PG 3.1)	0x0009_0000 (PG 1.0) 0x0009_0002 (PG 1.1) 0x0009_0003 (PG 2.0) 0x0009_0003 (PG 3.0) 0x0009_0003 (PG 3.1)
JTAG BSDL_ID	JTAGID Register (address location: 0x02620018)	0x0b98102f (PG 1.0) 0x1b98102f (PG 1.1) 0x2b98102f (PG 2.0) 0x3b98102f (PG 3.0) 0xbb98102f (PG 3.1)	0x0b98102f (PG 1.0) 0x1b98102f (PG 1.1) 0x2b98102f (PG 2.0) 0x3b98102f (PG 3.0) 0xbb98102f (PG 3.1)	0x0b98102f (PG 1.0) 0x1b98102f (PG 1.1) 0x2b98102f (PG 2.0) 0x3b98102f (PG 3.0) 0xbb98102f (PG 3.1)
Frequency	C66x	Up to 1.2 GHz	Up to 1.2 GHz	Up to 1.2 GHz
	ARM Cortex-A15	Up to 1.4 GHz	Up to 1.4 GHz	Up to 1.4 GHz

(1) The Security Accelerator function is subject to export control and will be enabled only for approved device shipments.

Copyright © 2012–2017, Texas Instruments Incorporated

Table 3-1. Device Features Comparison (continued)

HARDWARE FEATURES		66AK2H14	66AK2H12	66AK2H06
Voltage	Core (V)	SmartReflex™ variable supply	SmartReflex™ variable supply	SmartReflex™ variable supply
	I/O (V)	0.85 V, 1.0 V, 1.35 V, 1.5 V, 1.8 V and 3.3 V	0.85 V, 1.0 V, 1.35 V, 1.5 V, 1.8 V and 3.3 V	0.85 V, 1.0 V, 1.35 V, 1.5 V, 1.8 V and 3.3 V
BGA Package	40 mm × 40 mm	1517-pin flip-chip plastic BGA (AAW)	1517-pin flip-chip plastic BGA (AAW)	1517-pin flip-chip plastic BGA (AAW)
Process Technology	µm	0.028 µm	0.028 µm	0.028 µm

3.1 Related Products

For information about other devices in this family of products or related products, see the following links.

Digital Signal Processors From sensors to servers, TI has the right DSPs for every application.

66AK2x Multicore DSP + ARM Processors Describes the features, applications, and products available on these processors.

Companion Products for 66AK2Hxx Review products that are frequently purchased or used in conjunction with this product.

Copyright © 2012–2017, Texas Instruments Incorporated

4 Terminal Configuration and Functions

4.1 Package Terminals

Figure 4-1 shows the AAW ball grid array package (bottom view). The 14 pins that serve the 10-GbE function (XFI) in the 66AK2H14 are reserved in the 66AK2H12/06 devices.

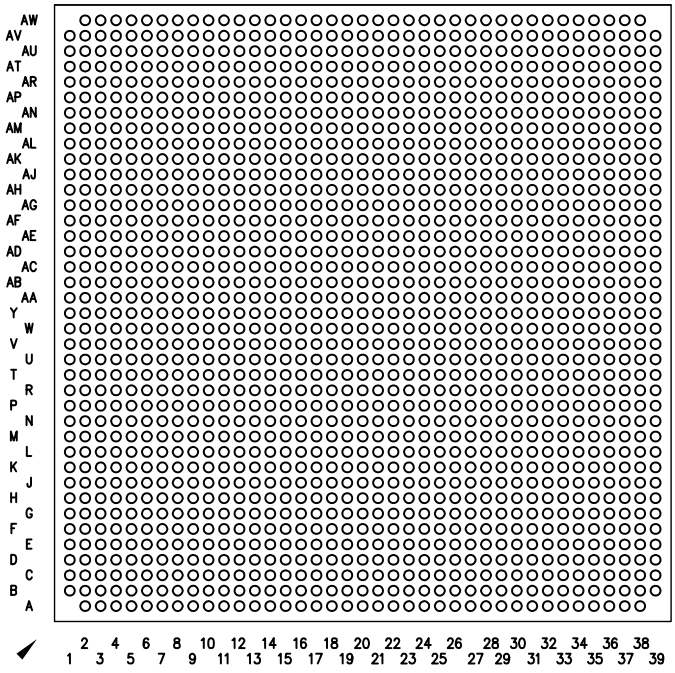

Figure 4-1. AAW 1517-Pin BGA Package (Bottom View)

4.2 Pin Map

The following figures show the 66AK2Hxx pin assignments in four quadrants (A, B, C, and D). The 14 pins serving the 10-GbE function (XFI) in the 66AK2H14 device are reserved in the 66AK2H12/06 devices.

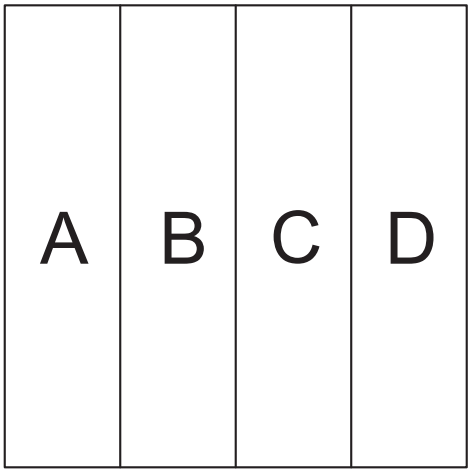

Figure 4-2. Pin Map Panels (Bottom View)

Copyright © 2012–2017, Texas Instruments Incorporated

	1	2	3	4	5	6	7	8	9	10
AW	(NOPIN)	VSS	VSS	HYP1CLKP	HYP1CLKN	VSS	HYP0RXN3	HYP0RXP3	VSS	HYP0RXN0
AV	VSS	VSS	HYP1RXN3	HYP1RXP3	VSS	HYP1RXN1	HYP1RXP1	VSS	HYP0RXN2	HYP0RXP2
AU	VSS	VSS	VSS	HYP1RXN2	HYP1RXP2	VSS	HYP1RXN0	HYP1RXP0	VSS	HYP0RXN1
AT	RSV190	VSS	HYP1TXN3	HYP1TXP3	VSS	HYP1TXN0	HYP1TXP0	VSS	HYP0CLKP	HYP0CLKN
AR	RSV189	RSV186	VSS	HYP1TXN2	HYP1TXP2	VSS	HYP0TXN3	HYP0TXP3	VSS	HYP0TXN1
AP	TSRXCLKOUT0N	RSV187	TSRXCLKOUT1N	VSS	HYP1TXN1	HYP1TXP1	VSS	HYP0TXN2	HYP0TXP2	VSS
AN	TSRXCLKOUT0P	VSS	TSRXCLKOUT1P	RSV002	VSS	VSS	VSS	VSS	VSS	RSV019
AM	TSREFCLKP	ALTCORECLKP	VSS	RSV003	CVDD	HYP1REFRES	RSV020	VSS	HYP0REFRES	VSS
AL	TSREFCLKN	ALTCORECLKN	SYSCLKP	CORECLKSEL	VSS	CVDD	VSS	CVDD	VSS	VDDAHV
AK	SYSCLKOUT	VSS	SYSCLKN	$\overline{\text{POR}}$	RSV012	VSS	CVDD	VSS	CVDD	VSS
AJ	HYP0TXPMDAT	HYP0RXPMCLK	HYP0TXFLCLK	HYP0RXFLDAT	HYP0RXFLCLK	VSS	VSS	CVDD	VSS	CVDD
AH	HYP1TXPMCLK	HYP1TXFLDAT	HYP1TXFLCLK	HYP1RXFLCLK	HYP0TXPMCLK	VSS	VSS	VSS	CVDD	VSS
AG	TDI	HYP1RXFLDAT	HYP0RXPMDAT	VSS	HYP0TXFLDAT	DVDD18	VSS	CVDD	VSS	CVDD
AF	TDO	HYP1TXPMDAT	HYP1RXPMCLK	HYP1RXPMDAT	BOOTCOMPLETE	VSS	DVDD18	VSS	CVDD	VSS
AE	TCK	TMS	VSS	$\overline{\text{LRESET}}$	HOUT	DVDD18	VSS	CVDD	VSS	CVDD
AD	$\overline{\text{TRST}}$	$\overline{\text{RESET}}$	$\overline{\text{RESETFULL}}$	$\overline{\text{LRESETNMIEN}}$	$\overline{\text{NMI}}$	VSS	DVDD18	VSS	CVDD	VSS
AC	TSPUSHEVT1	TSPUSHEVT0	TSSYNCEVT	RSV188	$\overline{\text{RESETSTAT}}$	DVDD18	VSS	CVDD	VSS	CVDD
AB	TSCOMPOUT	EMU01	EMU14	EMU10	DVDD18	VSS	DVDD18	VSS	CVDD	VSS
AA	USBRESREF	EMU00	EMU11	EMU18	VSS	DVDD18	VSS	CVDD	VSS	CVDD
Y	USBRX0M	VSS	EMU02	EMU03	DVDD18	VSS	DVDD18	VSS	CVDD	VSS
W	USBRX0P	USBCLKP	EMU04	EMU05	VSS	DVDD18	VSS	CVDD	VSS	CVDD
V	USBTX0M	USBCLKM	VSS	EMU06	DVDD18	VSS	DVDD18	VSS	CVDD	VSS
U	USBTX0P	USBDP	EMU08	EMU07	EMU12	DVDD18	VSS	CVDD	VSS	CVDD
T	USBVBUS	USBDM	EMU09	EMU13	EMU16	VSS	DVDD18	VSS	CVDD	VSS
R	USBID0	VSS	EMU15	EMU17	VSS	DVDD18	VSS	CVDD	VSS	CVDD
P	RSV001	RSV000	SDA0	SCL2	VSS	VSS	CVDD	VSS	CVDD	VSS
N	SCL0	SDA1	SDA2	SCL1	VSS	CVDD	VSS	CVDD	VSS	CVDD
M	TIMI1	TIMI0	TIMO0	TIMO1	UART1RTS	VSS	CVDD	VSS	CVDD	VSS
L	UART0CTS	UART1RXD	USBDRVVBUS	UART0RTS	VSS	CVDD	VSS	DVDD15	VSS	DVDD15
K	UART1CTS	UART0TXD	UART1TXD	UART0RXD	VSS	VSS	DVDD15	VSS	DVDD15	VSS
J	VSS	VSS	VSS	VSS	VSS	DVDD15	VSS	DVDD15	VSS	DVDD15
H	DDR3AD04	DDR3AD01	DDR3AD13	VSS	DDR3AD17	VSS	DVDD15	VSS	DVDD15	$\overline{\text{DDR3ARQ1}}$
G	DDR3AD00	DDR3AD03	DDR3AD10	DDR3AD16	DDR3AD20	DDR3AD29	DDR3AD30	DDR3AA02	DDR3AA01	DDR3AA03
F	DDR3AD02	DDR3AD06	DDR3ADQM1	DDR3AD09	DDR3AD19	DDR3AD26	DDR3AD25	DDR3AA05	DDR3AA04	DDR3AA10
E	DDR3ADQS0P	DDR3AD05	VSS	DDR3AD08	VSS	DDR3ADQM3	VSS	DDR3AA00	VSS	DDR3AA12
D	DDR3ADQS0N	DDR3AD07	DDR3AD14	DDR3AD15	DDR3AD18	DDR3AD21	DDR3AD31	DDR3AA09	DDR3AA07	DDR3AA15
C	VSS	DDR3ADQM0	DDR3ADQS1N	VSS	DDR3AD22	VSS	DDR3AD24	VSS	DDR3AA06	VSS
B	VSS	VSS	DDR3ADQS1P	DDR3AD12	DDR3ADQS2N	DDR3AD23	DDR3ADQS3P	DDR3AD28	DDR3AA08	DDR3AA14
A	(NOPIN)	VSS	VSS	DDR3AD11	DDR3ADQS2P	DDR3ADQM2	DDR3ADQS3N	DDR3AD27	DDR3AA11	DDR3AA13
	1	2	3	4	5	6	7	8	9	10

Figure 4-3. 66AK2Hxx Pin Map Left Side Panel (A) — Bottom View

Copyright © 2012–2017, Texas Instruments Incorporated

	11	12	13	14	15	16	17	18	19	20
AW	HYP0RXP0	VSS	RSV167	RSV168	VSS	RSV161	RSV162	VSS	XFIRXP1	XFIRXN1
AV	VSS	RSV171	RSV172	VSS	RSV165	RSV166	VSS	XFIRXP0	XFIRXN0	VSS
AU	HYP0RXP1	VSS	RSV169	RSV170	VSS	RSV163	RSV164	VSS	XFICLKP	XFICLKN
AT	VSS	RSV183	RSV184	VSS	RSV177	RSV178	VSS	XFITXP0	XFITXN0	VSS
AR	HYP0TXP1	VSS	RSV181	RSV182	VSS	RSV175	RSV176	VSS	XFITXP1	XFITXN1
AP	HYP0TXN0	HYP0TXP0	VSS	RSV179	RSV180	VSS	RSV173	RSV174	VSS	VSS
AN	VSS	VSS	VSS	VSS	VSS	XFIREFRES0	VSS	VSS	RSV026	VSS
AM	RSV099	VSS	VSS	RSV025	RSV185	RSV024	VSS	VSS	XFIREFRES1	VSS
AL	VSS	VDDAHV	VSS	VDDAHV	VSS	VDDAHV	VSS	VDDAHV	VSS	VDDAHV
AK	VDDAHV	VSS	VDDAHV	VSS	VDDAHV	VSS	VDDAHV	VSS	VDDAHV	VSS
AJ	VSS	VDDALV	VSS	VDDALV	VSS	VDDALV	VSS	VDDALV	VSS	VDDALV
AH	VDDALV	VSS	VDDALV	VSS	VDDALV	VSS	VDDALV	VSS	VDDALV	VSS
AG	VSS	VDDALV	VSS	VDDALV	VSS	VDDALV	VSS	VDDALV	VSS	VDDALV
AF	AVDDA1	VSS	VDDALV	VSS	VDDALV	VSS	VDDALV	VSS	VDDALV	VSS
AE	VSS	CVDD	VSS	CVDD	VSS	CVDD	VSS	CVDD	VSS	CVDD
AD	VNWA2	VSS	CVDD	VSS	CVDD	VSS	CVDD1	VSS	CVDD1	VSS
AC	VSS	CVDD	VSS	CVDD	VSS	CVDD	VSS	CVDD1	VSS	CVDD
AB	CVDD	VSS	VDDUSB	VSS	CVDD	VSS	CVDD	VSS	CVDD	VSS
AA	VSS	VP	VSS	DVDD33	VSS	CVDD	VSS	CVDD	VSS	CVDD
Y	VPTX	VSS	VPH	VSS	CVDD	VSS	CVDD	VSS	CVDD	VSS
W	VSS	CVDD	VSS	CVDD	VSS	CVDD1	VSS	CVDD	VSS	CVDD
V	VNWA4	VSS	CVDD1	VSS	CVDD	VSS	CVDD1	VSS	CVDD	VSS
U	VSS	CVDD	VSS	CVDD1	VSS	CVDD1	VSS	CVDD	VSS	CVDD1
T	CVDD	VSS	CVDD1	VSS	CVDD	VSS	CVDD	VSS	CVDD	VSS
R	VSS	CVDD	VSS	CVDD	VSS	CVDD	VSS	CVDD	VSS	CVDD
P	AVDDA6	VSS	CVDD	VSS	CVDD	VSS	CVDD	VSS	CVDD	VSS
N	VSS	CVDD	VSS	CVDD	VSS	CVDD	VSS	CVDD	VSS	AVDDA2
M	DVDD15	VSS	AVDDA7	VSS	AVDDA8	VSS	DVDD15	AVDDA9	DVDD15	AVDDA10
L	VSS	DVDD15	VSS	DVDD15	VSS	DVDD15	VSS	DVDD15	VSS	DVDD15
K	DVDD15	VSS	DVDD15	VSS	DVDD15	VSS	DVDD15	VSS	DVDD15	VSS
J	VSS	DVDD15	VSS	DVDD15	VSS	DVDD15	VSS	DVDD15	VSS	DVDD15
H	DVDD15	VSS	DVDD15	VSS	DVDD15	DDR3ARQ0	DVDD15	VSS	DVDD15	VSS
G	DDR3ABA2	DDR3ACKE0	DDR3AODT1	DDR3AVREFSSTL	DDR3ACB07	DDR3AD33	DDR3AD35	DDR3AD42	DDR3AD44	DDR3AD51
F	DDR3ACE1	DDR3AWE	RSV029	DDR3ACB05	DDR3ACB03	DDR3AD34	DDR3AD38	DDR3AD47	DDR3AD43	DDR3AD54
E	VSS	DDR3AODT0	VSS	DDR3ADQM8	VSS	DDR3AD32	VSS	DDR3AD39	VSS	DDR3AD53
D	DDR3ACE0	RSV027	RSV028	DDR3ACB06	DDR3ACB04	DDR3AD36	DDR3AD37	DDR3AD46	DDR3AD41	DDR3AD50
C	DDR3ABA1	VSS	DDR3ACAS	VSS	DDR3ACB01	VSS	DDR3ADQM4	VSS	DDR3AD40	VSS
B	DDR3ABA0	DDR3ACLKOUTN0	DDR3ACLKOUTN1	DDR3ARESET	DDR3ADQS8P	DDR3ACB02	DDR3ADQS4N	DDR3AD45	DDR3ADQS5P	DDR3AD49
A	DDR3ACKE1	DDR3ACLKOUTP0	DDR3ACLKOUTP1	DDR3ARAS	DDR3ADQS8N	DDR3ACB00	DDR3ADQS4P	DDR3ADQM5	DDR3ADQS5N	DDR3AD48
	11	**12**	**13**	**14**	**15**	**16**	**17**	**18**	**19**	**20**

Figure 4-4. 66AK2Hxx Pin Map Left Center Panel (B) — Bottom View

Copyright © 2012–2017, Texas Instruments Incorporated

21	22	23	24	25	26	27	28	29	30	
VSS	RIORXN2	RIORXP2	VSS	SGMII3RXN	SGMII3RXP	VSS	SGMII0RXN	SGMII0RXP	VSS	**AW**
RIORXN3	RIORXP3	VSS	RIORXN0	RIORXP0	VSS	SGMII1RXN	SGMII1RXP	VSS	PCIERXN1	**AV**
VSS	RIORXN1	RIORXP1	VSS	SGMII2RXN	SGMII2RXP	VSS	SGMII0TXN	SGMII0TXP	VSS	**AU**
RIOTXN3	RIOTXP3	VSS	RIOTXN0	RIOTXP0	VSS	SGMII1TXN	SGMII1TXP	VSS	PCIETXN0	**AT**
VSS	VSS	RIOTXN1	RIOTXP1	VSS	SGMII2TXN	SGMII2TXP	VSS	PCIETXN1	PCIETXP1	**AR**
VSS	RIOTXN2	RIOTXP2	VSS	SGMII3TXN	SGMII3TXP	VSS	VSS	VSS	VSS	**AP**
VSS	VSS	VSS	VSS	VSS	VSS	VSS	VSS	VSS	PACLKSEL	**AN**
RIOREFRES	VSS	RSV021	SGMIIREFRES	RSV023	PCIEREFRES	DVDD18	RSV022	DVDD18	RSV192	**AM**
VSS	VDDAHV	VSS	VDDAHV	VSS	DVDD18	VSS	DVDD18	VSS	CVDD	**AL**
VDDAHV	VSS	VDDAHV	VSS	VDDAHV	VSS	DVDD18	VSS	CVDD	VSS	**AK**
VSS	VDDALV	VSS	VDDALV	VSS	DVDD18	VSS	CVDD	VSS	DVDD15	**AJ**
VDDALV	VSS	VDDALV	VSS	VDDALV	VSS	CVDD	VSS	AVDDA4	VSS	**AH**
VSS	VDDALV	VSS	VNWA1	VSS	AVDDA5	VSS	CVDD	VSS	DVDD15	**AG**
VDDALV	VSS	VDDALV	VSS	CVDD	VSS	CVDD	VSS	DVDD15	VSS	**AF**
VSS	CVDD	VSS	CVDD	VSS	CVDD	VSS	AVDDA15	VSS	DVDD15	**AE**
CVDD	VSS	CVDD	VSS	CVDD	VSS	CVDD	AVDDA14	DVDD15	VSS	**AD**
VSS	CVDD	VSS	CVDD	VSS	CVDD	VSS	AVDDA13	VSS	DVDD15	**AC**
CVDD	VSS	CVDD	VSS	CVDD	VSS	CVDD	AVDDA12	DVDD15	VSS	**AB**
VSS	CVDD	VSS	CVDD	VSS	CVDD	VSS	DVDD15	VSS	DVDD15	**AA**
CVDD	VSS	CVDD	VSS	CVDD	VSS	CVDD	AVDDA11	DVDD15	VSS	**Y**
VSS	CVDDT1	VSS	CVDD	VSS	CVDD	VSS	DVDD15	VSS	DVDD15	**W**
CVDD1	VSS	CVDD	VSS	CVDD	VSS	CVDD	VSS	DVDD15	VSS	**V**
VSS	CVDDT1	VSS	CVDD	VSS	CVDD	VSS	DVDD15	VSS	DVDD15	**U**
CVDD1	VSS	CVDD	VSS	CVDD	VSS	CVDD	VSS	DVDD15	VSS	**T**
VSS	CVDDT1	VSS	CVDD	VSS	CVDD	VSS	DVDD15	VSS	DVDD15	**R**
CVDD	VSS	CVDD	VSS	CVDD	VSS	CVDD	VSS	DVDD15	VSS	**P**
VSS	CVDD	VSS	CVDD	VSS	CVDD	VSS	AVDDA3	VSS	DVDD18	**N**
VPP	VSS	VNWA3	VSS	CVDD	VSS	CVDD	VSS	DVDD18	VSS	**M**
VSS	VPP	VSS	DVDD18	VSS	DVDD18	VSS	CVDD	VSS	DVDD18	**L**
DVDD15	VSS	DVDD15	VSS	DVDD18	VSS	DVDD18	VSS	CVDD	VSS	**K**
VSS	DVDD15	VSS	VSS	VSS	DVDD18	VSS	DVDD18	VSS	CVDD	**J**
DVDD15	$\overline{\text{DDR3ARQ2}}$	DVDD15	VSS	DVDD18	VSS	DVDD18	VSS	VSS	VSS	**H**
DDR3AD55	DDR3AD57	VSS	CORESEL3	VSS	RSV018	VSS	SPI2DOUT	VSS	GPIO09	**G**
DDR3AD62	DDR3AD59	RSV013	CORESEL0	SPI0SCS0	RSV017	SPI1DIN	SPI2DIN	GPIO00	GPIO12	**F**
VSS	DDR3AD60	RSV014	CORESEL1	SPI2SCS3	SPI0SCS2	SPI1SCS3	VSS	GPIO05	GPIO11	**E**
DDR3ADQM6	DDR3AD63	DDR3AD58	CORESEL2	SPI2CLK	SPI0SCS3	SPI1SCS2	SPI2SCS1	GPIO02	GPIO06	**D**
DDR3AD52	VSS	DDR3AD56	VSS	SPI0SCS1	VSS	SPI1SCS1	SPI1CLK	VSS	GPIO07	**C**
DDR3ADQS6N	DDR3AD61	DDR3ADQS7N	RSV004	DDR3ACLKP	SPI0CLK	SPI1SCS0	SPI2SCS0	GPIO04	GPIO01	**B**
DDR3ADQS6P	DDR3ADQM7	DDR3ADQS7P	RSV005	DDR3ACLKN	SPI0DIN	SPI0DOUT	SPI1DOUT	SPI2SCS2	GPIO08	**A**
21	**22**	**23**	**24**	**25**	**26**	**27**	**28**	**29**	**30**	

Figure 4-5. 66AK2Hxx Pin Map Right Center Panel (C) — Bottom View

31	32	33	34	35	36	37	38	39	
PCIECLKP	PCIECLKN	VSS	SRIOSGMIICLKP	SRIOSGMIICLKN	RSV81	VSS	VSS	(NOPIN)	**AW**
PCIERXP1	VSS	PASSCLKP	PASSCLKN	VSS	RSV79	RSV77	VSS	VSS	**AV**
PCIERXN0	PCIERXP0	VSS	RSV008	RSV80	RSV76	RSV78	VCNTL4	VSS	**AU**
PCIETXP0	VSS	XFIMDIO	RSV009	RSV75	VSS	RSV74	VCNTL3	VCNTL0	**AT**
VSS	MDIO	VSS	XFIMDCLK	VCNTL5	VCNTL2	VCNTL1	DDR3BCLKP	DDR3BCLKN	**AR**
MDCLK	RSV193	RSV195	RSV191	VD	VCL	VSS	RSV006	RSV007	**AP**
VSS	RSV194	DDR3BD58	DDR3BD56	VSS	DDR3BD57	DDR3BD63	DDR3BDQS7P	DDR3BDQS7N	**AN**
CVDD	VSS	VSS	DDR3BD59	DDR3BD60	DDR3BD62	VSS	DDR3BD61	DDR3BDQM7	**AM**
VSS	DVDD15	DDR3BD55	DDR3BD52	VSS	DDR3BD53	DDR3BD54	DDR3BDQS6N	DDR3BDQS6P	**AL**
DVDD15	DDR3BRQ2	VSS	DDR3BDQM6	DDR3BD51	DDR3BD50	VSS	DDR3BD49	DDR3BD48	**AK**
VSS	VSS	DDR3BD41	DDR3BD43	VSS	DDR3BD44	DDR3BD47	DDR3BDQS5N	DDR3BDQS5P	**AJ**
DVDD15	DDR3BD40	VSS	DDR3BD37	DDR3BD38	DDR3BD42	VSS	DDR3BD46	DDR3BD45	**AH**
VSS	DDR3BD39	DDR3BDQM4	DDR3BD35	VSS	DDR3BD36	DDR3BD32	DDR3BD34	DDR3BDQM5	**AG**
DVDD15	DDR3BCB00	VSS	DDR3BCB01	DDR3BCB03	DDR3BD33	VSS	DDR3BDQS4P	DDR3BDQS4N	**AF**
VSS	DDR3BCB02	DDR3BCB04	DDR3BCB07	VSS	DDR3BCB05	DDR3BDQM8	DDR3BDQS8N	DDR3BDQS8P	**AE**
DVDD15	DDR3BRAS	VSS	DDR3BODT1	RSV030	DDR3BCB06	VSS	DDR3BCLKOUTP0	DDR3BCLKOUTN0	**AD**
DDR3BVREFSSTL	DDR3BRESET	DDR3BODT0	RSV031	VSS	DDR3BCAS	DDR3BWE	DDR3BCLKOUTN1	DDR3BCLKOUTP1	**AC**
DVDD15	RSV032	VSS	DDR3BCE0	DDR3BBA2	VSS	VSS	DDR3BCKE1	DDR3BCKE0	**AB**
DDR3BRQ0	DDR3BA00	DDR3BA08	DDR3BBA1	VSS	DDR3BCE1	DDR3BBA0	DDR3BA14	DDR3BA11	**AA**
DVDD15	DDR3BA09	VSS	DDR3BA03	DDR3BA12	DDR3BA15	VSS	DDR3BA10	DDR3BA13	**Y**
VSS	DDR3BA02	DDR3BA01	DDR3BA04	VSS	DDR3BA06	DDR3BA07	DDR3BD27	DDR3BD28	**W**
DVDD15	DDR3BD30	VSS	DDR3BA05	DDR3BD24	DDR3BD31	VSS	DDR3BDQS3N	DDR3BDQS3P	**V**
VSS	DDR3BDQM3	DDR3BD29	DDR3BD26	VSS	DDR3BD25	DDR3BD21	DDR3BD23	DDR3BDQM2	**U**
DVDD15	DDR3BD08	VSS	DDR3BD16	DDR3BD18	DDR3BD22	VSS	DDR3BDQS2N	DDR3BDQS2P	**T**
VSS	DDR3BD09	DDR3BD14	DDR3BD17	VSS	DDR3BD20	DDR3BD19	DDR3BD12	DDR3BD11	**R**
DVDD15	DDR3BRQ1	VSS	DDR3BDQM1	DDR3BD10	DDR3BD15	VSS	DDR3BDQS1N	DDR3BDQS1P	**P**
VSS	DDR3BD13	DDR3BD04	DDR3BD01	VSS	DDR3BD06	DDR3BD05	DDR3BD07	DDR3BDQM0	**N**
DVDD15	EMIFD00	VSS	EMIFD13	EMIFD15	EMIFD14	DDR3BD02	DDR3BDQS0P	DDR3BDQS0N	**M**
VSS	DVDD15	EMIFD02	EMIFD03	EMIFD12	EMIFD11	VSS	DDR3BD00	DDR3BD03	**L**
DVDD18	VSS	EMIFA07	EMIFA16	VSS	EMIFD10	EMIFD06	EMIFD09	EMIFD08	**K**
VSS	DVDD18	VSS	EMIFA05	EMIFA18	EMIFA21	EMIFD01	EMIFD05	EMIFD07	**J**
CVDD	VSS	EMIFBE1	EMIFBE0	EMIFA06	EMIFA12	VSS	EMIFA22	EMIFD04	**H**
VSS	EMIFCE1	EMIFCE0	EMIFCE2	VSS	EMIFA02	EMIFA09	EMIFA14	EMIFA19	**G**
GPIO10	RSV016	EMIFRNW	EMIFA00	EMIFA17	EMIFWE	EMIFA01	EMIFA10	EMIFA15	**F**
GPIO25	GPIO14	RSV015	EMIFA04	EMIFA13	EMIFCE3	EMIFOE	EMIFWAIT0	EMIFA03	**E**
GPIO22	GPIO27	GPIO21	VSS	EMIFA11	EMIFA23	VSS	RSV011	EMIFWAIT1	**D**
GPIO18	VSS	GPIO28	GPIO29	EMIFA08	EMIFA20	ARMCLKP	RSV010	VSS	**C**
GPIO15	GPIO19	GPIO24	GPIO31	GPIO23	GPIO30	ARMCLKN	VSS	VSS	**B**
GPIO13	GPIO17	GPIO20	GPIO26	GPIO03	GPIO16	VSS	VSS	(NOPIN)	**A**
31	**32**	**33**	**34**	**35**	**36**	**37**	**38**	**39**	

Figure 4-6. 66AK2Hxx Pin Map Right Side Panel (D) — Bottom View

Copyright © 2012–2017, Texas Instruments Incorporated

4.3 Terminal Functions

The terminal functions table (Table 4-2) identifies the external signal names, the associated pin (ball) numbers, the pin type (I, O/Z, or I/O/Z), whether the pin has any internal pullup/pulldown resistors, and gives functional pin descriptions. This table is arranged by function. The power terminal functions table (Table 4-3) lists the various power supply pins and ground pins and gives functional pin descriptions. Table 4-4 shows all pins arranged by signal name. Table 4-5 shows all pins arranged by ball number.

There are 17 pins that have a secondary function as well as a primary function. The secondary function is indicated with a dagger (†).

For more detailed information on device configuration, peripheral selection, multiplexed/shared pins, and pullup/pulldown resistors, see Section 10.2.

Use the symbol definitions in Table 4-1 when reading Table 4-2.

Table 4-1. I/O Functional Symbol Definitions

FUNCTIONAL SYMBOL	DEFINITION	Table 4-2 COLUMN HEADING
IPD or IPU	Internal 100-µA pulldown or pullup is provided for this terminal. In most systems, a 1-kΩ resistor can be used to oppose the IPD/IPU. For more detailed information on pulldown/pullup resistors and situations in which external pulldown/pullup resistors are required, see *Hardware Design Guide for KeyStone II Devices*.	IPD/IPU
A	Analog signal	Type
GND	Ground	Type
I	Input terminal	Type
O	Output terminal	Type
S	Supply voltage	Type
Z	Three-state terminal or high impedance	Type

Table 4-2. Terminal Functions — Signals and Control by Function

SIGNAL NAME	BALL NO.	TYPE	IPD/IPU	DESCRIPTION
Boot Configuration Pins				
ARMAVSSHARED†	G24	I	Down	Boot strapped pin to share ARM AVS with SoC. Pin shared with CORESEL3.
AVSIFSEL0†	M2	I	Down	Default value (Boot Strapped) for SR PINMUX register (SR_PINCTL). Pins shared with TIMI0 and TIMI1.
AVSIFSEL1†	M1	I	Down	
BOOTMODE_RSVD†	B31	I	Down	BOOTMODE reserved pin. Pin shared with GPIO15.
BOOTMODE00†	B30	I	Down	User-defined BOOTMODE pins See Section 10.1.2 for more details. († Pins are secondary functions and are shared with GPIO[01:13])
BOOTMODE01†	D29	I	Down	
BOOTMODE02†	A35	I	Down	
BOOTMODE03†	B29	I	Down	
BOOTMODE04†	E29	I	Down	
BOOTMODE05†	D30	I	Down	
BOOTMODE06†	C30	I	Down	
BOOTMODE07†	A30	I	Down	
BOOTMODE08†	G30	I	Down	
BOOTMODE09†	F31	I	Down	
BOOTMODE10†	E30	I	Down	
BOOTMODE11†	F30	I	Down	
BOOTMODE12†	A31	I	Down	
BOOTMODE13†	F24	I		User-defined BOOTMODE pins See Section 10.1.2 for more details. († Pins are secondary functions and are shared with CORESEL[0:2])
BOOTMODE14†	E24	I		
BOOTMODE15†	D24	I		
BOOTCOMPLETE	AF5	OZ	Down	Boot progress indication output

Table 4-2. Terminal Functions — Signals and Control by Function (continued)

SIGNAL NAME	BALL NO.	TYPE	IPD/IPU	DESCRIPTION
DDR3A_REMAP_EN†	A36	I	Down	Control ARM remapping of DDR3A address space in the lower 4GB (32b space) Mode select. Secondary function. Pin shared with GPIO16.
LENDIAN†	F29	I	Up	Little-endian configuration pin. Pin shared with GPIO00.
MAINPLLODSEL†	E32	I	Down	Main PLL Output divider select. Pin shared with GPIO14.
Clock / Reset				
ALTCORECLKN	AL2	I		Alternate clock input to Main PLL
ALTCORECLKP	AM2	I		
ARMCLKN	B37	I		Reference clock to drive ARM CorePac PLL
ARMCLKP	C37	I		
CORECLKSEL	AL4	I	Down	Core clock select to select between SYSCLK(N|p) and ALTCORECCLK to the main PLL
CORESEL0	F24	I	Down	Select for the target core for LRESET and NMI
CORESEL1	E24	I	Down	
CORESEL2	D24	I	Down	
CORESEL3	G24	I	Down	
DDR3ACLKN	A25	I		DDR3A reference clock input to DDR PLL
DDR3ACLKP	B25	I		
DDR3BCLKN	AR39	I		DDR3B reference clock input to DDR PLL
DDR3BCLKP	AR38	I		
HOUT	AE5	OZ	Up	Interrupt output pulse created by IPCGRH
HYP0CLKN	AT10	I		HyperLink reference clock to drive HyperLink0 SerDes
HYP0CLKP	AT9	I		
$\overline{\text{LRESET}}$	AE4	I	Up	Warm reset
$\overline{\text{LRESETNMIEN}}$	AD4	I	Up	Enable for core selects
HYP1CLKN	AW5	I		HyperLink reference clock to drive HyperLink 1 SerDes
HYP1CLKP	AW4	I		
$\overline{\text{NMI}}$	AD5	I	Up	Nonmaskable interrupt
PACLKSEL	AN30	I	Down	PA clock select to choose between core clock and PASSCLK pins
PASSCLKN	AV34	I		Packet Accelerator subsystem reference clock
PASSCLKP	AV33	I		
PCIECLKN	AW32	I		PCIe clock input to drive PCIe SerDes
PCIECLKP	AW31	I		
$\overline{\text{POR}}$	AK4	I		Power-on reset
$\overline{\text{RESETFULL}}$	AD3	I	Up	Full reset
$\overline{\text{RESET}}$	AD2	I	Up	Warm reset of nonisolated portion of the device
$\overline{\text{RESETSTAT}}$	AC5	O	Up	Reset status output
SRIOSGMIICLKN	AW35	I		RapidIO/SGMII reference clock to drive the RapidIO and SGMII SerDes
SRIOSGMIICLKP	AW34	I		
SYSCLKN	AK3	I		System clock input to Main PLL (Main PLL optional vs. ALTCORECLK)
SYSCLKP	AL3	I		
SYSCLKOUT	AK1	OZ	Down	System clock output to be used as a general-purpose output clock for debug purposes
TSREFCLKN	AL1	I		External precision clock source for SyncE
TSREFCLKP	AM1	I		
TSRXCLKOUT0N	AP1	O		SerDes recovered clock output for SyncE.
TSRXCLKOUT0P	AN1	O		
TSRXCLKOUT1N	AP3	O		SerDes recovered clock output for SyncE.
TSRXCLKOUT1P	AN3	O		

Copyright © 2012–2017, Texas Instruments Incorporated

Table 4-2. Terminal Functions — Signals and Control by Function (continued)

SIGNAL NAME	BALL NO.	TYPE	IPD/IPU	DESCRIPTION
DDR3A				
DDR3ADQM0	C2	OZ		DDR3A EMIF data masks
DDR3ADQM1	F3	OZ		
DDR3ADQM2	A6	OZ		
DDR3ADQM3	E6	OZ		
DDR3ADQM4	C17	OZ		
DDR3ADQM5	A18	OZ		
DDR3ADQM6	D21	OZ		
DDR3ADQM7	A22	OZ		
DDR3ADQM8	E14	OZ		
DDR3ADQS0P	E1	IOZ		DDR3A EMIF data strobe
DDR3ADQS0N	D1	IOZ		
DDR3ADQS1P	B3	IOZ		
DDR3ADQS1N	C3	IOZ		
DDR3ADQS2P	A5	IOZ		
DDR3ADQS2N	B5	IOZ		
DDR3ADQS3P	B7	IOZ		
DDR3ADQS3N	A7	IOZ		
DDR3ADQS4P	A17	IOZ		
DDR3ADQS4N	B17	IOZ		
DDR3ADQS5P	B19	IOZ		
DDR3ADQS5N	A19	IOZ		
DDR3ADQS6P	A21	IOZ		
DDR3ADQS6N	B21	IOZ		
DDR3ADQS7P	A23	IOZ		
DDR3ADQS7N	B23	IOZ		
DDR3ADQS8P	B15	IOZ		
DDR3ADQS8N	A15	IOZ		
DDR3ACB00	A16	IOZ		DDR3A EMIF check bits
DDR3ACB01	C15	IOZ		
DDR3ACB02	B16	IOZ		
DDR3ACB03	F15	IOZ		
DDR3ACB04	D15	IOZ		
DDR3ACB05	F14	IOZ		
DDR3ACB06	D14	IOZ		
DDR3ACB07	G15	IOZ		

Copyright © 2012–2017, Texas Instruments Incorporated

Table 4-2. Terminal Functions — Signals and Control by Function (continued)

SIGNAL NAME	BALL NO.	TYPE	IPD/IPU	DESCRIPTION
DDR3AD00	G1	IOZ		DDR3A EMIF data bus
DDR3AD01	H2	IOZ		
DDR3AD02	F1	IOZ		
DDR3AD03	G2	IOZ		
DDR3AD04	H1	IOZ		
DDR3AD05	E2	IOZ		
DDR3AD06	F2	IOZ		
DDR3AD07	D2	IOZ		
DDR3AD08	E4	IOZ		
DDR3AD09	F4	IOZ		
DDR3AD10	G3	IOZ		
DDR3AD11	A4	IOZ		
DDR3AD12	B4	IOZ		
DDR3AD13	H3	IOZ		
DDR3AD14	D3	IOZ		
DDR3AD15	D4	IOZ		
DDR3AD16	G4	IOZ		DDR3A EMIF data bus
DDR3AD17	H5	IOZ		
DDR3AD18	D5	IOZ		
DDR3AD19	F5	IOZ		
DDR3AD20	G5	IOZ		
DDR3AD21	D6	IOZ		
DDR3AD22	C5	IOZ		
DDR3AD23	B6	IOZ		
DDR3AD24	C7	IOZ		
DDR3AD25	F7	IOZ		
DDR3AD26	F6	IOZ		
DDR3AD27	A8	IOZ		
DDR3AD28	B8	IOZ		
DDR3AD29	G6	IOZ		
DDR3AD30	G7	IOZ		
DDR3AD31	D7	IOZ		
DDR3AD32	E16	IOZ		DDR3A EMIF data bus
DDR3AD33	G16	IOZ		
DDR3AD34	F16	IOZ		
DDR3AD35	G17	IOZ		
DDR3AD36	D16	IOZ		
DDR3AD37	D17	IOZ		
DDR3AD38	F17	IOZ		
DDR3AD39	E18	IOZ		
DDR3AD40	C19	IOZ		
DDR3AD41	D19	IOZ		
DDR3AD42	G18	IOZ		
DDR3AD43	F19	IOZ		
DDR3AD44	G19	IOZ		
DDR3AD45	B18	IOZ		
DDR3AD46	D18	IOZ		
DDR3AD47	F18	IOZ		
DDR3AD48	A20	IOZ		

Copyright © 2012–2017, Texas Instruments Incorporated

Table 4-2. Terminal Functions — Signals and Control by Function (continued)

SIGNAL NAME	BALL NO.	TYPE	IPD/IPU	DESCRIPTION
DDR3AD49	B20	IOZ		DDR3A EMIF data bus
DDR3AD50	D20	IOZ		
DDR3AD51	G20	IOZ		
DDR3AD52	C21	IOZ		
DDR3AD53	E20	IOZ		
DDR3AD54	F20	IOZ		
DDR3AD55	G21	IOZ		
DDR3AD56	C23	IOZ		
DDR3AD57	G22	IOZ		
DDR3AD58	D23	IOZ		
DDR3AD59	F22	IOZ		
DDR3AD60	E22	IOZ		
DDR3AD61	B22	IOZ		
DDR3AD62	F21	IOZ		
DDR3AD63	D22	IOZ		
$\overline{\text{DDR3ACE0}}$	D11	OZ		DDR3A EMIF chip enable
$\overline{\text{DDR3ACE1}}$	F11	OZ		DDR3A EMIF chip enable
DDR3ABA0	B11	OZ		DDR3A EMIF bank address
DDR3ABA1	C11	OZ		
DDR3ABA2	G11	OZ		
DDR3AA00	E8	OZ		DDR3A EMIF address bus
DDR3AA01	G9	OZ		
DDR3AA02	G8	OZ		
DDR3AA03	G10	OZ		
DDR3AA04	F9	OZ		
DDR3AA05	F8	OZ		
DDR3AA06	C9	OZ		
DDR3AA07	D9	OZ		
DDR3AA08	B9	OZ		
DDR3AA09	D8	OZ		
DDR3AA10	F10	OZ		
DDR3AA11	A9	OZ		
DDR3AA12	E10	OZ		
DDR3AA13	A10	OZ		
DDR3AA14	B10	OZ		
DDR3AA15	D10	OZ		
$\overline{\text{DDR3ACAS}}$	C13	OZ		DDR3A EMIF column address strobe
$\overline{\text{DDR3ARAS}}$	A14	OZ		DDR3A EMIF row address strobe
$\overline{\text{DDR3AWE}}$	F12	OZ		DDR3A EMIF write enable
DDR3ACKE0	G12	OZ		DDR3A EMIF clock enable0
DDR3ACKE1	A11	OZ		DDR3A EMIF clock enable1
DDR3ACLKOUTP0	A12	OZ		DDR3A EMIF output clocks to drive SDRAMs (one clock pair per SDRAM) for Rank0
DDR3ACLKOUTN0	B12	OZ		
DDR3ACLKOUTP1	A13	OZ		DDR3A EMIF output clocks to drive SDRAMs (one clock pair per SDRAM) for Rank1
DDR3ACLKOUTN1	B13	OZ		
DDR3AODT0	E12	OZ		DDR3A EMIF on die termination outputs used to set termination on the SDRAMs for Rank0
DDR3AODT1	G13	OZ		DDR3A EMIF on die termination outputs used to set termination on the SDRAMs for Rank1
$\overline{\text{DDR3ARESET}}$	B14	OZ		DDR3A reset signal
DDR3ARZQ0	H16	A		PTV compensation pin for DDR3A
DDR3ARZQ1	H10	A		PTV compensation pin for DDR3A
DDR3ARZQ2	H22	A		PTV compensation pin for DDR3A

Copyright © 2012–2017, Texas Instruments Incorporated

Table 4-2. Terminal Functions — Signals and Control by Function (continued)

SIGNAL NAME	BALL NO.	TYPE	IPD/IPU	DESCRIPTION
DDR3B				
DDR3BDQM0	N39	OZ		DDR3B EMIF data masks
DDR3BDQM1	P34	OZ		
DDR3BDQM2	U39	OZ		
DDR3BDQM3	U32	OZ		
DDR3BDQM4	AG33	OZ		
DDR3BDQM5	AG39	OZ		
DDR3BDQM6	AK34	OZ		
DDR3BDQM7	AM39	OZ		
DDR3BDQM8	AE37	OZ		
DDR3BDQS0P	M38	IOZ		DDR3B EMIF data strobe
DDR3BDQS0N	M39	IOZ		
DDR3BDQS1P	P39	IOZ		
DDR3BDQS1N	P38	IOZ		
DDR3BDQS2P	T39	IOZ		
DDR3BDQS2N	T38	IOZ		
DDR3BDQS3P	V39	IOZ		
DDR3BDQS3N	V38	IOZ		
DDR3BDQS4P	AF38	IOZ		
DDR3BDQS4N	AF39	IOZ		
DDR3BDQS5P	AJ39	IOZ		
DDR3BDQS5N	AJ38	IOZ		
DDR3BDQS6P	AL39	IOZ		
DDR3BDQS6N	AL38	IOZ		
DDR3BDQS7P	AN38	IOZ		
DDR3BDQS7N	AN39	IOZ		
DDR3BDQS8P	AE39	IOZ		
DDR3BDQS8N	AE38	IOZ		
DDR3BCB00	AF32	IOZ		DDR3B EMIF check bits
DDR3BCB01	AF34	IOZ		
DDR3BCB02	AE32	IOZ		
DDR3BCB03	AF35	IOZ		
DDR3BCB04	AE33	IOZ		
DDR3BCB05	AE36	IOZ		
DDR3BCB06	AD36	IOZ		
DDR3BCB07	AE34	IOZ		

Copyright © 2012–2017, Texas Instruments Incorporated

Table 4-2. Terminal Functions — Signals and Control by Function (continued)

SIGNAL NAME	BALL NO.	TYPE	IPD/IPU	DESCRIPTION
DDR3BD00	L38	IOZ		DDR3B EMIF data bus
DDR3BD01	N34	IOZ		
DDR3BD02	M37	IOZ		
DDR3BD03	L39	IOZ		
DDR3BD04	N33	IOZ		
DDR3BD05	N37	IOZ		
DDR3BD06	N36	IOZ		
DDR3BD07	N38	IOZ		
DDR3BD08	T32	IOZ		
DDR3BD09	R32	IOZ		
DDR3BD10	P35	IOZ		
DDR3BD11	R39	IOZ		
DDR3BD12	R38	IOZ		
DDR3BD13	N32	IOZ		
DDR3BD14	R33	IOZ		
DDR3BD15	P36	IOZ		
DDR3BD16	T34	IOZ		DDR3B EMIF data bus
DDR3BD17	R34	IOZ		
DDR3BD18	T35	IOZ		
DDR3BD19	R37	IOZ		
DDR3BD20	R36	IOZ		
DDR3BD21	U37	IOZ		
DDR3BD22	T36	IOZ		
DDR3BD23	U38	IOZ		
DDR3BD24	V35	IOZ		
DDR3BD25	U36	IOZ		
DDR3BD26	U34	IOZ		
DDR3BD27	W38	IOZ		
DDR3BD28	W39	IOZ		
DDR3BD29	U33	IOZ		
DDR3BD30	V32	IOZ		
DDR3BD31	V36	IOZ		
DDR3BD32	AG37	IOZ		DDR3B EMIF data bus
DDR3BD33	AF36	IOZ		
DDR3BD34	AG38	IOZ		
DDR3BD35	AG34	IOZ		
DDR3BD36	AG36	IOZ		
DDR3BD37	AH34	IOZ		
DDR3BD38	AH35	IOZ		
DDR3BD39	AG32	IOZ		
DDR3BD40	AH32	IOZ		
DDR3BD41	AJ33	IOZ		
DDR3BD42	AH36	IOZ		
DDR3BD43	AJ34	IOZ		
DDR3BD44	AJ36	IOZ		
DDR3BD45	AH39	IOZ		

Copyright © 2012–2017, Texas Instruments Incorporated

Table 4-2. Terminal Functions — Signals and Control by Function (continued)

SIGNAL NAME	BALL NO.	TYPE	IPD/IPU	DESCRIPTION
DDR3BD46	AH38	IOZ		DDR3B EMIF data bus
DDR3BD47	AJ37	IOZ		
DDR3BD48	AK39	IOZ		
DDR3BD49	AK38	IOZ		
DDR3BD50	AK36	IOZ		
DDR3BD51	AK35	IOZ		
DDR3BD52	AL34	IOZ		
DDR3BD53	AL36	IOZ		
DDR3BD54	AL37	IOZ		
DDR3BD55	AL33	IOZ		
DDR3BD56	AN34	IOZ		
DDR3BD57	AN36	IOZ		
DDR3BD58	AN33	IOZ		
DDR3BD59	AM34	IOZ		
DDR3BD60	AM35	IOZ		
DDR3BD61	AM38	IOZ		
DDR3BD62	AM36	IOZ		
DDR3BD63	AN37	IOZ		
$\overline{\text{DDR3BCE0}}$	AB34	OZ		DDR3B EMIF chip enable
$\overline{\text{DDR3BCE1}}$	AA36	OZ		DDR3B EMIF chip enable
DDR3BBA0	AA37	OZ		DDR3B EMIF bank address
DDR3BBA1	AA34	OZ		
DDR3BBA2	AB35	OZ		
DDR3BA00	AA32	OZ		DDR3B EMIF address bus
DDR3BA01	W33	OZ		
DDR3BA02	W32	OZ		
DDR3BA03	Y34	OZ		
DDR3BA04	W34	OZ		
DDR3BA05	V34	OZ		
DDR3BA06	W36	OZ		
DDR3BA07	W37	OZ		
DDR3BA08	AA33	OZ		
DDR3BA09	Y32	OZ		
DDR3BA10	Y38	OZ		
DDR3BA11	AA39	OZ		
DDR3BA12	Y35	OZ		
DDR3BA13	Y39	OZ		
DDR3BA14	AA38	OZ		
DDR3BA15	Y36	OZ		
$\overline{\text{DDR3BCAS}}$	AC36	OZ		DDR3B EMIF column address strobe
$\overline{\text{DDR3BRAS}}$	AD32	OZ		DDR3B EMIF row address strobe
$\overline{\text{DDR3BWE}}$	AC37	OZ		DDR3B EMIF write enable
DDR3BCKE0	AB39	OZ		DDR3B EMIF clock enable0
DDR3BCKE1	AB38	OZ		DDR3B EMIF clock enable1
DDR3BCLKOUTP0	AD38	OZ		DDR3B EMIF output clocks to drive SDRAM (one clock pair for Rank0)
DDR3BCLKOUTN0	AD39	OZ		
DDR3BCLKOUTP1	AC39	OZ		DDR3B EMIF output clocks to drive SDRAM (one clock pair for Rank1)
DDR3BCLKOUTN1	AC38	OZ		
DDR3BODT0	AC33	OZ		DDR3B EMIF on-die termination outputs used to set termination on the SDRAMs
DDR3BODT1	AD34	OZ		DDR3B EMIF on-die termination outputs used to set termination on the SDRAMs
$\overline{\text{DDR3BRESET}}$	AC32	OZ		DDR3B reset signal

Copyright © 2012–2017, Texas Instruments Incorporated

Table 4-2. Terminal Functions — Signals and Control by Function (continued)

SIGNAL NAME	BALL NO.	TYPE	IPD/IPU	DESCRIPTION
DDR3BRZQ0	AA31	A		PTV compensation pin for DDR3B
DDR3BRZQ1	P32	A		PTV compensation pin for DDR3B
DDR3BRZQ2	AK32	A		PTV compensation pin for DDR3B
EMIF16				
EMIFRW	F33	O	Up	EMIF control signals
EMIFCE0	G33	O	Up	
EMIFCE1	G32	O	Up	
EMIFCE2	G34	O	Up	
EMIFCE3	E36	O	Up	
EMIFOE	E37	O	Up	
EMIFWE	F36	O	Up	
EMIFBE0	H34	O	Up	
EMIFBE1	H33	O	Up	
EMIFWAIT0	E38	I	Down	
EMIFWAIT1	D39	I	Down	
EMIFA00	F34	O	Down	EMIF address
EMIFA01	F37	O	Down	
EMIFA02	G36	O	Down	
EMIFA03	E39	O	Down	
EMIFA04	E34	O	Down	
EMIFA05	J34	O	Down	
EMIFA06	H35	O	Down	
EMIFA07	K33	O	Down	
EMIFA08	C35	O	Down	
EMIFA09	G37	O	Down	
EMIFA10	F38	O	Down	
EMIFA11	D35	O	Down	
EMIFA12	H36	O	Down	
EMIFA13	E35	O	Down	
EMIFA14	G38	O	Down	
EMIFA15	F39	O	Down	
EMIFA16	K34	O	Down	EMIF address
EMIFA17	F35	O	Down	
EMIFA18	J35	O	Down	
EMIFA19	G39	O	Down	
EMIFA20	C36	O	Down	
EMIFA21	J36	O	Down	
EMIFA22	H38	O	Down	
EMIFA23	D36	O	Down	

Copyright © 2012–2017, Texas Instruments Incorporated

Table 4-2. Terminal Functions — Signals and Control by Function (continued)

SIGNAL NAME	BALL NO.	TYPE	IPD/IPU	DESCRIPTION
EMIFD00	M32	IOZ	Down	EMIF data
EMIFD01	J37	IOZ	Down	
EMIFD02	L33	IOZ	Down	
EMIFD03	L34	IOZ	Down	
EMIFD04	H39	IOZ	Down	
EMIFD05	J38	IOZ	Down	
EMIFD06	K37	IOZ	Down	
EMIFD07	J39	IOZ	Down	
EMIFD08	K39	IOZ	Down	
EMIFD09	K38	IOZ	Down	
EMIFD10	K36	IOZ	Down	
EMIFD11	L36	IOZ	Down	
EMIFD12	L35	IOZ	Down	
EMIFD13	M34	IOZ	Down	
EMIFD14	M36	IOZ	Down	
EMIFD15	M35	IOZ	Down	
EMU				
EMU00	AA2	IOZ	Up	Emulation and trace port
EMU01	AB2	IOZ	Up	
EMU02	Y3	IOZ	Up	
EMU03	Y4	IOZ	Up	
EMU04	W3	IOZ	Up	
EMU05	W4	IOZ	Up	
EMU06	V4	IOZ	Up	
EMU07	U4	IOZ	Up	
EMU08	U3	IOZ	Up	
EMU09	T3	IOZ	Up	
EMU10	AB4	IOZ	Up	
EMU11	AA3	IOZ	Up	
EMU12	U5	IOZ	Up	
EMU13	T4	IOZ	Up	
EMU14	AB3	IOZ	Up	
EMU15	R3	IOZ	Up	
EMU16	T5	IOZ	Up	
EMU17	R4	IOZ	Up	
EMU18	AA4	IOZ	Up	
EMU19†	A32	IOZ	Down	Emulation and trace port († Pins shared with GPIO[17:31])
EMU20†	C31	IOZ	Down	
EMU21†	B32	IOZ	Down	
EMU22†	A33	IOZ	Down	
EMU23†	D33	IOZ	Down	
EMU24†	D31	IOZ	Down	
EMU25†	B35	IOZ	Down	
EMU26†	B33	IOZ	Down	
EMU27†	E31	IOZ	Down	
EMU28†	A34	IOZ	Down	
EMU29†	D32	IOZ	Down	
EMU30†	C33	IOZ	Down	
EMU31†	C34	IOZ	Down	
EMU32†	B36	IOZ	Down	
EMU33†	B34	IOZ	Down	

Copyright © 2012–2017, Texas Instruments Incorporated

Table 4-2. Terminal Functions — Signals and Control by Function (continued)

SIGNAL NAME	BALL NO.	TYPE	IPD/IPU	DESCRIPTION
General-Purpose Input/Output (GPIO)				
GPIO00	F29	IOZ	Up	GPIO
GPIO01	B30	IOZ	Down	
GPIO02	D29	IOZ	Down	
GPIO03	A35	IOZ	Down	
GPIO04	B29	IOZ	Down	
GPIO05	E29	IOZ	Down	
GPIO06	D30	IOZ	Down	
GPIO07	C30	IOZ	Down	
GPIO08	A30	IOZ	Down	
GPIO09	G30	IOZ	Down	
GPIO10	F31	IOZ	Down	
GPIO11	E30	IOZ	Down	
GPIO12	F30	IOZ	Down	
GPIO13	A31	IOZ	Down	
GPIO14	E32	IOZ	Down	
GPIO15	B31	IOZ	Down	
GPIO16	A36	IOZ	Down	GPIO
GPIO17	A32	IOZ	Down	
GPIO18	C31	IOZ	Down	
GPIO19	B32	IOZ	Down	
GPIO20	A33	IOZ	Down	
GPIO21	D33	IOZ	Down	
GPIO22	D31	IOZ	Down	
GPIO23	B35	IOZ	Down	
GPIO24	B33	IOZ	Down	
GPIO25	E31	IOZ	Down	
GPIO26	A34	IOZ	Down	
GPIO27	D32	IOZ	Down	
GPIO28	C33	IOZ	Down	
GPIO29	C34	IOZ	Down	
GPIO30	B36	IOZ	Down	
GPIO31	B34	IOZ	Down	
HyperLink0				
HYP0RXN0	AW10	I		HyperLink0 receive data
HYP0RXP0	AW11	I		
HYP0RXN1	AU10	I		
HYP0RXP1	AU11	I		
HYP0RXN2	AV9	I		
HYP0RXP2	AV10	I		
HYP0RXN3	AW7	I		
HYP0RXP3	AW8	I		
HYP0TXN0	AP11	O		HyperLink0 transmit data
HYP0TXP0	AP12	O		
HYP0TXN1	AR10	O		
HYP0TXP1	AR11	O		
HYP0TXN2	AP8	O		
HYP0TXP2	AP9	O		
HYP0TXN3	AR7	O		
HYP0TXP3	AR8	O		

Copyright © 2012–2017, Texas Instruments Incorporated

Table 4-2. Terminal Functions — Signals and Control by Function (continued)

SIGNAL NAME	BALL NO.	TYPE	IPD/IPU	DESCRIPTION
HYP0RXFLCLK	AJ5	O	Down	HyperLink0 sideband signals
HYP0RXFLDAT	AJ4	O	Down	
HYP0TXFLCLK	AJ3	I	Down	
HYP0TXFLDAT	AG5	I	Down	
HYP0RXPMCLK	AJ2	I	Down	
HYP0RXPMDAT	AG3	I	Down	
HYP0TXPMCLK	AH5	O	Down	
HYP0TXPMDAT	AJ1	O	Down	
HYP0REFRES	AM9	A		HyperLink0 SerDes reference resistor input (3 kΩ ±1%)
HyperLink1				
HYP1RXN0	AU7	I		HyperLink1 receive data
HYP1RXP0	AU8	I		
HYP1RXN1	AV6	I		
HYP1RXP1	AV7	I		
HYP1RXN2	AU4	I		
HYP1RXP2	AU5	I		
HYP1RXN3	AV3	I		
HYP1RXP3	AV4	I		
HYP1TXN0	AT6	O		HyperLink1 transmit data
HYP1TXP0	AT7	O		
HYP1TXN1	AP5	O		
HYP1TXP1	AP6	O		
HYP1TXN2	AR4	O		
HYP1TXP2	AR5	O		
HYP1TXN3	AT3	O		
HYP1TXP3	AT4	O		
HYP1RXFLCLK	AH4	O	Down	HyperLink1 sideband signals
HYP1RXFLDAT	AG2	O	Down	
HYP1TXFLCLK	AH3	I	Down	
HYP1TXFLDAT	AH2	I	Down	
HYP1RXPMCLK	AF3	I	Down	
HYP1RXPMDAT	AF4	I	Down	
HYP1TXPMCLK	AH1	O	Down	
HYP1TXPMDAT	AF2	O	Down	
HYP1REFRES	AM6	A		HyperLink1 SerDes reference resistor input (3 kΩ ±1%)
I^2C				
SCL0	N1	IOZ		I^2C0 clock
SCL1	N4	IOZ		I^2C1 clock
SCL2	P4	IOZ		I^2C2 clock
SDA0	P3	IOZ		I^2C0 data
SDA1	N2	IOZ		I^2C1 data
SDA2	N3	IOZ		I^2C2 data
JTAG				
TCK	AE1	I	Up	JTAG clock input
TDI	AG1	I	Up	JTAG data input
TDO	AF1	OZ	Up	JTAG data output
TMS	AE2	I	Up	JTAG test mode input
$\overline{TRST}$	AD1	I	Down	JTAG reset
MDIO				
MDCLK	AP31	O	Down	MDIO clock

Copyright © 2012–2017, Texas Instruments Incorporated

Table 4-2. Terminal Functions — Signals and Control by Function (continued)

SIGNAL NAME	BALL NO.	TYPE	IPD/IPU	DESCRIPTION
MDIO	AR32	IOZ	Up	MDIO data
PCIe				
PCIERXN0	AU31	I		PCIexpress lane 0 receive data
PCIERXP0	AU32	I		
PCIERXN1	AV30	I		PCIexpress lane 1 receive data
PCIERXP1	AV31	I		
PCIETXN0	AT30	O		PCIexpress lane 0 transmit data
PCIETXP0	AT31	O		
PCIETXN1	AR29	O		PCIexpress lane 1 transmit data
PCIETXP1	AR30	O		
PCIEREFRES	AM26	A		PCIexpress SerDes reference resistor input (3 kΩ ±1%)
Serial RapidIO				
RIORXN0	AV24	I		Serial RapidIO lane 0 receive data
RIORXP0	AV25	I		
RIORXN1	AU22	I		Serial RapidIO lane 1 receive data
RIORXP1	AU23	I		
RIORXN2	AW22	I		Serial RapidIO lane 2 receive data
RIORXP2	AW23	I		
RIORXN3	AV21	I		Serial RapidIO lane 3 receive data
RIORXP3	AV22	I		
RIOTXN0	AT24	O		Serial RapidIO lane 0 transmit data
RIOTXP0	AT25	O		
RIOTXN1	AR23	O		Serial RapidIO lane 1 transmit data
RIOTXP1	AR24	O		
RIOTXN2	AP22	O		Serial RapidIO lane 2 transmit data
RIOTXP2	AP23	O		
RIOTXN3	AT21	O		Serial RapidIO lane 3 transmit data
RIOTXP3	AT22	O		
RIOREFRES	AM21	A		Serial RapidIO SerDes reference resistor input (3 kΩ ±1%)
SGMII				
SGMII0RXN	AW28	I		Ethernet MAC SGMII port 0 receive data
SGMII0RXP	AW29	I		
SGMII0TXN	AU28	O		Ethernet MAC SGMII port 0 transmit data
SGMII0TXP	AU29	O		
SGMII1RXN	AV27	I		Ethernet MAC SGMII port 1 receive data
SGMII1RXP	AV28	I		
SGMII1TXN	AT27	O		Ethernet MAC SGMII port 1 transmit data
SGMII1TXP	AT28	O		
SGMII2RXN	AU25	I		Ethernet MAC SGMII port 2 receive data
SGMII2RXP	AU26	I		
SGMII2TXN	AR26	O		Ethernet MAC SGMII port 2 transmit data
SGMII2TXP	AR27	O		
SGMII3RXN	AW25	I		Ethernet MAC SGMII port 3 receive data
SGMII3RXP	AW26	I		
SGMII3TXN	AP25	O		Ethernet MAC SGMII port 3 transmit data
SGMII3TXP	AP26	O		
SGMIIREFRES	AM24	A		SGMII SerDes reference resistor input (3 kΩ ±1%)
SmartReflex				
VCL	AP36	IOZ		Voltage control I^2C clock

Copyright © 2012–2017, Texas Instruments Incorporated

Table 4-2. Terminal Functions — Signals and Control by Function (continued)

SIGNAL NAME	BALL NO.	TYPE	IPD/IPU	DESCRIPTION
VCNTL0	AT39	OZ		Voltage control outputs to variable core power supply
VCNTL1	AR37	OZ		
VCNTL2	AR36	OZ		
VCNTL3	AT38	OZ		
VCNTL4	AU38	OZ		
VCNTL5	AR35	OZ		
VD	AP35	IOZ		Voltage control I^2C data
SPI0				
SPI0CLK	B26	OZ	Down	SPI0 clock
SPI0DIN	A26	I	Down	SPI0 data in
SPI0DOUT	A27	OZ	Down	SPI0 data out
SPI0SCS0	F25	OZ	Up	SPI0 interface enable 0
SPI0SCS1	C25	OZ	Up	SPI0 interface enable 1
SPI0SCS2	E26	OZ	Up	SPI0 interface enable 2
SPI0SCS3	D26	OZ	Up	SPI0 interface enable 3
SPI1				
SPI1CLK	C28	OZ	Down	SPI1 clock
SPI1DIN	F27	I	Down	SPI1 data in
SPI1DOUT	A28	OZ	Down	SPI1 data out
SPI1SCS0	B27	OZ	Up	SPI1 interface enable 0
SPI1SCS1	C27	OZ	Up	SPI1 interface enable 1
SPI1SCS2	D27	OZ	Up	SPI1 interface enable 2
SPI1SCS3	E27	OZ	Up	SPI1 interface enable 3
SPI2				
SPI2CLK	D25	OZ	Down	SPI2 clock
SPI2DIN	F28	I	Down	SPI2 data in
SPI2DOUT	G28	OZ	Down	SPI2 data out
SPI2SCS0	B28	OZ	Up	SPI2 interface enable 0
SPI2SCS1	D28	OZ	Up	SPI2 interface enable 1
SPI2SCS2	A29	OZ	Up	SPI2 interface enable 2
SPI2SCS3	E25	OZ	Up	SPI2 interface enable 3
Sync-Ethernet / IEEE 1588				
TSCOMPOUT	AB1	O	Down	IEEE 1588 compare output.
TSPUSHEVT0	AC2	IOZ	Down	PPS push event from GPS for IEEE 1588
TSPUSHEVT1	AC1	IOZ	Down	Push event from BCN for IEEE 1588
TSSYNCEVT	AC3	O	Down	IEEE 1588 sync event output.
Timer				
TIMI0	M2	I	Down	Timer inputs
TIMI1	M1	I	Down	
TIMO0	M3	OZ	Down	Timer outputs
TIMO1	M4	OZ	Down	
UART0				
UART0CTS	L1	I	Down	UART0
UART0RTS	L4	OZ	Down	
UART0RXD	K4	I	Down	
UART0TXD	K2	OZ	Down	

Copyright © 2012–2017, Texas Instruments Incorporated

Table 4-2. Terminal Functions — Signals and Control by Function (continued)

SIGNAL NAME	BALL NO.	TYPE	IPD/IPU	DESCRIPTION
UART1				
UART1CTS	K1	I	Down	UART1
UART1RTS	M5	OZ	Down	
UART1RXD	L2	I	Down	
UART1TXD	K3	OZ	Down	
USB				
USBCLKM	V2	I		USB ref clock
USBCLKP	W2	I		
USBDM	T2	IOZ		USB D-
USBDP	U2	IOZ		USB D+
USBDRVVBUS	L3	O	Down	Used to enable an external charge pump to provide +5V on the VBUS pin of the USB connector.
USBID0	R1	A		USB ID
USBRX0M	Y1	I		USB receive data
USBRX0P	W1	I		
USBTX0M	V1	O		USB transmit data
USBTX0P	U1	O		
USBVBUS	T1	A		Connect to VBUS pin on USB connector through protection switch
USBRESREF	AA1	P		Reference resistor connection for USB PHY
XFI (66AK2H14 only)				
XFICLKP	AU19	I		XFI reference clock to drive the XFI SerDes
XFICLKN	AU20	I		
XFIMDCLK	AR34	O	Down	XFI MDIO clock
XFIMDIO	AT33	IOZ	Up	XFI MDIO data
XFIRXN0	AV19	I		Ethernet MAC XFI port 0 receive data
XFIRXP0	AV18	I		
XFITXN0	AT19	O		Ethernet MAC XFI port 0 transmit data
XFITXP0	AT18	O		
XFIRXN1	AW20	I		Ethernet MAC XFI port 1 receive data
XFIRXP1	AW19	I		
XFITXN1	AR20	O		Ethernet MAC XFI port 1 transmit data
XFITXP1	AR19	O		
XFIREFRES0	AN16	A		XFI SerDes reference resistor input (3 kΩ ±1%)
XFIREFRES1	AM19	A		XFI SerDes reference resistor input (3 kΩ ±1%)
Reserved				
RSV000	P2	OZ	Down	Reserved — leave unconnected
RSV001	P1	OZ	Down	Reserved — leave unconnected
RSV002	AN4	O		Reserved — leave unconnected
RSV003	AM4	O		Reserved — leave unconnected
RSV004	B24	O		Reserved — leave unconnected
RSV005	A24	O		Reserved — leave unconnected
RSV006	AP38	O		Reserved — leave unconnected
RSV007	AP39	O		Reserved — leave unconnected
RSV008	AU34	O		Reserved — leave unconnected
RSV009	AT34	O		Reserved — leave unconnected
RSV010	C38	O		Reserved — leave unconnected
RSV011	D38	O		Reserved — leave unconnected
RSV012	AK5	OZ	Down	Reserved — leave unconnected
RSV013	F23	A		GND
RSV014	E23	A		Reserved — leave unconnected
RSV015	E33	A		Reserved — leave unconnected
RSV016	F32	A		Reserved — leave unconnected

Copyright © 2012–2017, Texas Instruments Incorporated

Table 4-2. Terminal Functions — Signals and Control by Function (continued)

SIGNAL NAME	BALL NO.	TYPE	IPD/IPU	DESCRIPTION
RSV017	F26	A		Reserved — leave unconnected
RSV018	G26	A		Reserved — leave unconnected
RSV019	AN10	A		Reserved — leave unconnected
RSV020	AM7	A		Reserved — leave unconnected
RSV021	AM23	A		Reserved — leave unconnected
RSV022	AM28	A		Reserved — leave unconnected
RSV023	AM25	A		Reserved — leave unconnected
RSV024	AM16	A		Reserved — leave unconnected
RSV025	AM14	A		Reserved — leave unconnected
RSV026	AN19	A		Reserved — leave unconnected
RSV027	D12	OZ		Reserved — leave unconnected
RSV028	D13	OZ		Reserved — leave unconnected
RSV029	F13	A		Reserved — leave unconnected
RSV030	AD35	OZ		Reserved — leave unconnected
RSV031	AC34	OZ		Reserved — leave unconnected
RSV032	AB32	A		Reserved — leave unconnected
RSV060 (66AK2H12/06 only)	AV19	I		Reserved — leave unconnected
RSV061 (66AK2H12/06 only)	AV18	I		Reserved — leave unconnected
RSV062 (66AK2H12/06 only)	AT19	O		Reserved — leave unconnected
RSV063 (66AK2H12/06 only)	AT18	O		Reserved — leave unconnected
RSV064 (66AK2H12/06 only)	AW20	I		Reserved — leave unconnected
RSV065 (66AK2H12/06 only)	AW19	I		Reserved — leave unconnected
RSV066 (66AK2H12/06 only)	AR20	O		Reserved — leave unconnected
RSV067 (66AK2H12/06 only)	AR19	O		Reserved — leave unconnected
RSV068 (66AK2H12/06 only)	AN16	A		Reserved — leave unconnected
RSV069 (66AK2H12/06 only)	AM19	A		Reserved — leave unconnected
RSV070 (66AK2H12/06 only)	AU19	I		Reserved — leave unconnected
RSV071 (66AK2H12/06 only)	AU20	I		Reserved — leave unconnected
RSV072 (66AK2H12/06 only)	AT33	IOZ	Up	Reserved — leave unconnected
RSV073 (66AK2H12/06 only)	AR34	O	Down	Reserved — leave unconnected
RSV074	AT37	IOZ		Reserved — leave unconnected
RSV075	AT35	IOZ		Reserved — leave unconnected
RSV076	AU36	OZ		Reserved — leave unconnected
RSV077	AV37	OZ		Reserved — leave unconnected
RSV078	AU37	OZ		Reserved — leave unconnected
RSV079	AV36	OZ		Reserved — leave unconnected
RSV080	AU35	OZ		Reserved — leave unconnected
RSV081	AW36	OZ		Reserved — leave unconnected
RSV099	AM11	A		Reserved — leave unconnected
RSV161	AW16	I		Reserved — leave unconnected
RSV162	AW17	I		Reserved — leave unconnected

Copyright © 2012–2017, Texas Instruments Incorporated

Table 4-2. Terminal Functions — Signals and Control by Function (continued)

SIGNAL NAME	BALL NO.	TYPE	IPD/IPU	DESCRIPTION
RSV163	AU16	I		Reserved — leave unconnected
RSV164	AU17	I		Reserved — leave unconnected
RSV165	AV15	I		Reserved — leave unconnected
RSV166	AV16	I		Reserved — leave unconnected
RSV167	AW13	I		Reserved — leave unconnected
RSV168	AW14	I		Reserved — leave unconnected
RSV169	AU13	I		Reserved — leave unconnected
RSV170	AU14	I		Reserved — leave unconnected
RSV171	AV12	I		Reserved — leave unconnected
RSV172	AV13	I		Reserved — leave unconnected
RSV173	AP17	O		Reserved — leave unconnected
RSV174	AP18	O		Reserved — leave unconnected
RSV175	AR16	O		Reserved — leave unconnected
RSV176	AR17	O		Reserved — leave unconnected
RSV177	AT15	O		Reserved — leave unconnected
RSV178	AT16	O		Reserved — leave unconnected
RSV179	AP14	O		Reserved — leave unconnected
RSV180	AP15	O		Reserved — leave unconnected
RSV181	AR13	O		Reserved — leave unconnected
RSV182	AR14	O		Reserved — leave unconnected
RSV183	AT12	O		Reserved — leave unconnected
RSV184	AT13	O		Reserved — leave unconnected
RSV185	AM15	A		Reserved — leave unconnected
RSV186	AR2	I		Reserved — leave unconnected
RSV187	AP2	I		Reserved — leave unconnected
RSV188	AC4	OZ	Down	Reserved — leave unconnected
RSV189	AR1	I		Reserved — leave unconnected
RSV190	AT1	I		Reserved — leave unconnected
RSV191	AP34	I	Down	Reserved — leave unconnected
RSV192	AM30	I	Down	Reserved — leave unconnected
RSV193	AP32	OZ	Down	Reserved — leave unconnected
RSV194	AN32	OZ	Down	Reserved — leave unconnected
RSV195	AP33	IOZ	Up	Reserved — leave unconnected

Table 4-3. Terminal Functions — Power and Ground

SUPPLY	BALL NO.	VOLTS	DESCRIPTION
AVDDA1	AF11	1.8 V	C66x CorePac PLL supply
AVDDA2	N20	1.8 V	DDR3A PLL supply
AVDDA3	N28	1.8 V	ARM CorePac PLL supply
AVDDA4	AH29	1.8 V	DDR3B PLL supply
AVDDA5	AG26	1.8 V	Network Coprocessor PLL supply
AVDDA6	P11	1.8 V	DDRA DLL supply
AVDDA7	M13	1.8 V	DDRA DLL supply
AVDDA8	M15	1.8 V	DDRA DLL supply
AVDDA9	M18	1.8 V	DDRA DLL supply
AVDDA10	M20	1.8 V	DDRA DLL supply
AVDDA11	Y28	1.8 V	DDRB DLL supply
AVDDA12	AB28	1.8 V	DDRB DLL supply
AVDDA13	AC28	1.8 V	DDRB DLL supply
AVDDA14	AD28	1.8 V	DDRB DLL supply

Copyright © 2012–2017, Texas Instruments Incorporated

Table 4-3. Terminal Functions — Power and Ground (continued)

SUPPLY	BALL NO.	VOLTS	DESCRIPTION
AVDDA15	AE28	1.8 V	DDRB DLL supply
CVDD	H31, J30, K29, L6, L28, M7, M9, M25, M27, N6, N8, N10, N12, N14, N16, N18, N22, N24, N26, P7, P9, P13, P15, P17, P19, P21, P23, P25, P27, R8, R10, R12, R14, R16, R18, R20, R24, R26, T9, T11, T15, T17, T19, T23, T25, T27, U8, U10, U12, U18, U24, U26, V9, V15, V19, V23, V25, V27, W8, W10, W12, W14, W18, W20, W24, W26, Y9, Y15, Y17, Y19, Y21, Y23, Y25, Y27, AA8, AA10, AA16, AA18, AA20, AA22, AA24, AA26, AB9, AB11, AB15, AB17, AB19, AB21, AB23, AB25, AB27, AC8, AC10, AC12, AC14, AC16, AC20, AC22, AC24, AC26, AD9, AD13, AD15, AD21, AD23, AD25, AD27, AE8, AE10, AE12, AE14, AE16, AE18, AE20, AE22, AE24, AE26, AF9, AF25, AF27, AG8, AG10, AG28, AH9, AH27, AJ8, AJ10, AJ28, AK7, AK9, AK29, AL6 , AL8, AL30, AM5, AM31	AVS	SmartReflex DSP core supply voltage.
CVDD1	T13, T21, U14, U16, U20, V13, V17, V21, W16, AC18, AD17, AD19	0.95 V	Core supply voltage for memory array
CVDDT1	R22, U22, W22	0.95 V	Cortex-A15 processor fixed core memory supply voltage
DDR3AVREFSSTL	G14	0.75 V	0.75-V DDR3A reference voltage
DDR3BVREFSSTL	AC31	0.75 V	0.75-V DDR3B reference voltage
DVDD15	H7, H9, H11, H13, H15, H17, H19, H21, H23, J6, J8, J10, J12, J14, J16, J18, J20, J22, K7, K9, K11, K13, K15, K17, K19, K21, K23, L8, L10, L12, L14, L16, L18, L20, L32, M11, M17, M19, M31, P29, P31, R28, R30, T29, T31, U28, U30, V29, V31, W28, W30, Y29, Y31, AA28, AA30, AB29, AB31, AC30, AD29, AD31, AE30, AF29, AF31, AG30, AH31, AJ30, AK31, AL32	1.35 V / 1.5 V	1.35-V / 1.5-V DDR IO supply
DVDD18	H25, H27, J26, J28, J32, K25, K27, K31, L24, L26, L30, M29, N30, R6, T7, U6, V5, V7, W6, Y5, Y7, AA6, AB5, AB7, AC6, AD7, AE6, AF7, AG6, AJ26, AK27, AL26, AL28, AM27, AM29	1.8 V	1.8-V IO supply
DVDD33	AA14	3.3 V	3.3-V USB supply
VDDAHV	AK11, AK13, AK15, AK17, AK19, AK21, AK23, AK25, AL10, AL12, AL14, AL16, AL18, AL20, AL22, AL24	1.8 V	SerDes IO supply
VDDALV	AF13, AF15, AF17, AF19, AF21, AF23, AG12, AG14, AG16, AG18, AG20, AG22, AH11, AH13, AH15, AH17, AH19, AH21, AH23, AH25, AJ12, AJ14, AJ16, AJ18, AJ20, AJ22, AJ24	0.85 V	SerDes low voltage
VDDUSB	AB13	0.85 V	SerDes digiital IO supply
VNWA1	AG24	0.95 V	Fixed Nwell supply
VNWA2	AD11	0.95 V	Fixed Nwell supply
VNWA3	M23	0.95 V	Fixed Nwell supply
VNWA4	V11	0.95 V	Fixed Nwell supply
VP	AA12	0.85 V	Filtered .85 V USB supply
VPH	Y13	3.3 V	Filtered 3.3 V USB supply
VPP	L22, M21		Leave unconnected
VPTX	Y11	0.85 V	Filtered 0.85-V USB supply

Copyright © 2012–2017, Texas Instruments Incorporated

Table 4-3. Terminal Functions — Power and Ground (continued)

SUPPLY	BALL NO.	VOLTS	DESCRIPTION
VSS	A2, A3, A37, A38, B1, B2, B38, B39, C1, C4, C6, C8, C10, C12, C14, C16, C18, C20, C22, C24, C26, C29, C32, C39, D34, D37, E3, E5, E7, E9, E11, E13, E15, E17, E19, E21, E28, G23, G25, G27, G29, G31, G35, H4, H6, H8, H12, H14, H18, H20, H24, H26, H28, H29, H30, H32, H37, J1, J2, J3, J4, J5, J7, J9, J11, J13, J15, J17, J19, J21, J23, J24, J25, J27, J29, J31, J33, K5, K6, K8, K10, K12, K14, K16, K18, K20, K22, K24, K26, K28, K30, K32, K35, L5, L7, L9, L11, L13, L15, L17, L19, L21, L23, L25, L27, L29, L31, L37, M6, M8, M10, M12, M14, M16, M22, M24, M26, M28, M30, M33, N5, N7, N9, N11, N13, N15, N17, N19, N21, N23, N25, N27, N29, N31, N35, P5, P6, P8, P10, P12, P14, P16, P18, P20, P22, P24, P26, P28, P30, P33, P37, R2, R5, R7, R9, R11, R13, R15, R17, R19, R21, R23, R25, R27, R29, R31, R35, T6, T8, T10, T12, T14, T16, T18, T20, T22, T24, T26, T28, T30, T33, T37, U7, U9, U11, U13, U15, U17, U19, U21, U23, U25, U27, U29, U31, U35, V3, V6, V8, V10, V12, V14, V16, V18, V20, V22, V24, V26, V28, V30, V33, V37, W5, W7, W9, W11, W13, W15, W17, W19, W21, W23, W25, W27, W29, W31, W35, Y2, Y6, Y8, Y10, Y12, Y14, Y16, Y18, Y20, Y22, Y24, Y26, Y30, Y33, Y37, AA5, AA7, AA9, AA11, AA13, AA15, AA17, AA19, AA21, AA23, AA25, AA27, AA29, AA35, AB6, AB8, AB10, AB12, AB14, AB16, AB18, AB20, AB22, AB24, AB26, AB30, AB33, AB36, AB37, AC7, AC9, AC11, AC13, AC15, AC17, AC19, AC21, AC23, AC25, AC27, AC29, AC35, AD6, AD8, AD10, AD12, AD14, AD16, AD18, AD20, AD22, AD24, AD26, AD30, AD33, AD37, AE3, AE7, AE9, AE11, AE13, AE15, AE17, AE19, AE21, AE23, AE25, AE27, AE29, AE31, AE35, AF6, AF8, AF10, AF12, AF14, AF16, AF18, AF20, AF22, AF24, AF26, AF28, AF30, AF33, AF37, AG4, AG7, AG9, AG11, AG13, AG15, AG17, AG19, AG21, AG23, AG25, AG27, AG29, AG31, AG35, AH6, AH7, AH8, AH10, AH12, AH14, AH16, AH18, AH20, AH22, AH24, AH26, AH28, AH30, AH33, AH37, AJ6, AJ7, AJ9, AJ11, AJ13, AJ15, AJ17, AJ19, AJ21, AJ23, AJ25, AJ27, AJ29, AJ31, AJ32, AJ35, AK2, AK6, AK8, AK10, AK12, AK14, AK16, AK18, AK20, AK22, AK24, AK26, AK28, AK30, AK33, AK37, AL5, AL7, AL9, AL11, AL13, AL15, AL17, AL19, AL21, AL23, AL25, AL27, AL29, AL31, AL35, AM3, AM8, AM10, AM12, AM13, AM17, AM18, AM20, AM22, AM32, AM33, AM37, AN2, AN5, AN6, AN7, AN8, AN9, AN11, AN12, AN13, AN14, AN15, AN17, AN18, AN20, AN21, AN22, AN23, AN24, AN25, AN26, AN27, AN28, AN29, AN31, AN35, AP4, AP7, AP10, AP13, AP16, AP19, AP20, AP21, AP24, AP27, AP28, AP29, AP30, AP37, AR3, AR6, AR9, AR12, AR15, AR18, AR21, AR22, AR25, AR28, AR31, AR33, AT2, AT5, AT8, AT11, AT14, AT17, AT20, AT23, AT26, AT29, AT32, AT36, AU1, AU2, AU3, AU6, AU9, AU12, AU15, AU18, AU21, AU24, AU27, AU30, AU33, AU39, AV1, AV2, AV5, AV8, AV11, AV14, AV17, AV20, AV23, AV26, AV29 , AV32, AV35, AV38, AV39, AW2, AW3, AW6, AW9, AW12, AW15, AW18, AW21, AW24, AW27, AW30, AW33, AW37, AW38	GND	Ground

Table 4-4. Terminal Functions — By Signal Name

SIGNAL NAME	BALL NUMBER	SIGNAL NAME	BALL NUMBER	SIGNAL NAME	BALL NUMBER
(nopin)	A1	CVDD	H31, J30, K29, L6, L28, M7, M9, M25, M27, N6, N8, N10, N12, N14, N16, N18, N22, N24, N26, P7, P9, P13, P15, P17, P19, P21, P23, P25, P27, R8, R10, R12	DDR3ACB05	F14
(nopin)	A39			DDR3ACB06	D14
(nopin)	AW1			DDR3ACB07	G15
(nopin)	AW39			DDR3ACE0	D11
ALTCORECLKN	AL2	CVDD	R14, R16, R18, R20, R24, R26, T9, T11, T15, T17, T19, T23, T25, T27, U8, U10, U12, U18, U24, U26, V9, V15, V19, V23, V25, V27, W8, W10, W12, W14, W18	DDR3ACE1	F11
ALTCORECLKP	AM2			DDR3ACKE0	G12
ARMCLKN	B37			DDR3ACKE1	A11
ARMCLKP	C37			DDR3ACLKN	A25
ARMAVSSHARED†	G24	CVDD	W20, W24, W26, Y9, Y15, Y17, Y19, Y21, Y23, Y25, Y27, AA8, AA10, AA16, AA18, AA20, AA22, AA24, AA26, AB9, AB11, AB15, AB17, AB19, AB21, AB23, AB25	DDR3ACLKOUTN0	B12
AVDDA1	AF11			DDR3ACLKOUTN1	B13
AVDDA2	N20			DDR3ACLKOUTP0	A12
AVDDA3	N28			DDR3ACLKOUTP1	A13
AVDDA4	AH29	CVDD	AB27, AC8, AC10, AC12, AC14, AC16, AC20, AC22, AC24, AC26, AD9, AD13, AD15, AD21, AD23, AD25, AD27, AE8, AE10, AE12, AE14, AE16, AE18, AE20	DDR3ACLKP	B25
AVDDA5	AG26			DDR3AD00	G1
AVDDA6	P11			DDR3AD01	H2
AVDDA7	M13			DDR3AD02	F1
AVDDA8	M15	CVDD	AE22, AE24, AE26, AF9, AF25, AF27, AG8, AG10, AG28, AH9, AH27, AJ8, AJ10, AJ28, AK7, AK9, AK29, AL6, , AL8, AL30, AM5, AM31	DDR3AD03	G2
AVDDA9	M18			DDR3AD04	H1
AVDDA10	M20			DDR3AD05	E2
AVDDA11	Y28			DDR3AD06	F2
AVDDA12	AB28	CVDD1	T13, T21, U14, U16, U20, V13, V17, V21, W16, AC18, AD17, AD19	DDR3AD07	D2
AVDDA13	AC28			DDR3AD08	E4
AVDDA14	AD28	CVDDT1	R22, U22, W22	DDR3AD09	F4
AVDDA15	AE28	DDR3A_REMAP_EN†	A36	DDR3AD10	G3
AVSIFSEL0†	M2	DDR3AA00	E8	DDR3AD11	A4
AVSIFSEL1†	M1	DDR3AA01	G9	DDR3AD12	B4
BOOTMODE_RSVD†	B31	DDR3AA02	G8	DDR3AD13	H3
BOOTMODE00†	B30	DDR3AA03	G10	DDR3AD14	D3
BOOTMODE01†	D29	DDR3AA04	F9	DDR3AD15	D4
BOOTMODE02†	A35	DDR3AA05	F8	DDR3AD16	G4
BOOTMODE03†	B29	DDR3AA06	C9	DDR3AD17	H5
BOOTMODE04†	E29	DDR3AA07	D9	DDR3AD18	D5
BOOTMODE05†	D30	DDR3AA08	B9	DDR3AD19	F5
BOOTMODE06†	C30	DDR3AA09	D8	DDR3AD20	G5
BOOTMODE07†	A30	DDR3AA10	F10	DDR3AD21	D6
BOOTMODE08†	G30	DDR3AA11	A9	DDR3AD22	C5
BOOTMODE09†	F31	DDR3AA12	E10	DDR3AD23	B6
BOOTMODE10†	E30	DDR3AA13	A10	DDR3AD24	C7
BOOTMODE11†	F30	DDR3AA14	B10	DDR3AD25	F7
BOOTMODE12†	A31	DDR3AA15	D10	DDR3AD26	F6
BOOTMODE13†	F24	DDR3ABA0	B11	DDR3AD27	A8
BOOTMODE14†	E24	DDR3ABA1	C11	DDR3AD28	B8
BOOTMODE15†	D24	DDR3ABA2	G11	DDR3AD29	G6
BOOTCOMPLETE	AF5	DDR3ACAS	C13	DDR3AD30	G7
CORECLKSEL	AL4	DDR3ACB00	A16	DDR3AD31	D7
CORESEL0	F24	DDR3ACB01	C15	DDR3AD32	E16
CORESEL1	E24	DDR3ACB02	B16	DDR3AD33	G16
CORESEL2	D24	DDR3ACB03	F15	DDR3AD34	F16
CORESEL3	G24	DDR3ACB04	D15	DDR3AD35	G17

Copyright © 2012–2017, Texas Instruments Incorporated

Table 4-4. Terminal Functions — By Signal Name (continued)

SIGNAL NAME	BALL NUMBER	SIGNAL NAME	BALL NUMBER	SIGNAL NAME	BALL NUMBER
DDR3AD36	D16	DDR3ADQS7P	A23	DDR3BD02	M37
DDR3AD37	D17	DDR3ADQS8N	A15	DDR3BD03	L39
DDR3AD38	F17	DDR3ADQS8P	B15	DDR3BD04	N33
DDR3AD39	E18	DDR3AODT0	E12	DDR3BD05	N37
DDR3AD40	C19	DDR3AODT1	G13	DDR3BD06	N36
DDR3AD41	D19	DDR3ARAS	A14	DDR3BD07	N38
DDR3AD42	G18	DDR3ARESET	B14	DDR3BD08	T32
DDR3AD43	F19	DDR3ARZQ0	H16	DDR3BD09	R32
DDR3AD44	G19	DDR3ARZQ1	H10	DDR3BD10	P35
DDR3AD45	B18	DDR3ARZQ2	H22	DDR3BD11	R39
DDR3AD46	D18	DDR3AVREFSSTL	G14	DDR3BD12	R38
DDR3AD47	F18	DDR3AWE	F12	DDR3BD13	N32
DDR3AD48	A20	DDR3BA00	AA32	DDR3BD14	R33
DDR3AD49	B20	DDR3BA01	W33	DDR3BD15	P36
DDR3AD50	D20	DDR3BA02	W32	DDR3BD16	T34
DDR3AD51	G20	DDR3BA03	Y34	DDR3BD17	R34
DDR3AD52	C21	DDR3BA04	W34	DDR3BD18	T35
DDR3AD53	E20	DDR3BA05	V34	DDR3BD19	R37
DDR3AD54	F20	DDR3BA06	W36	DDR3BD20	R36
DDR3AD55	G21	DDR3BA07	W37	DDR3BD21	U37
DDR3AD56	C23	DDR3BA08	AA33	DDR3BD22	T36
DDR3AD57	G22	DDR3BA09	Y32	DDR3BD23	U38
DDR3AD58	D23	DDR3BA10	Y38	DDR3BD24	V35
DDR3AD59	F22	DDR3BA11	AA39	DDR3BD25	U36
DDR3AD60	E22	DDR3BA12	Y35	DDR3BD26	U34
DDR3AD61	B22	DDR3BA13	Y39	DDR3BD27	W38
DDR3AD62	F21	DDR3BA14	AA38	DDR3BD28	W39
DDR3AD63	D22	DDR3BA15	Y36	DDR3BD29	U33
DDR3ADQM0	C2	DDR3BBA0	AA37	DDR3BD30	V32
DDR3ADQM1	F3	DDR3BBA1	AA34	DDR3BD31	V36
DDR3ADQM2	A6	DDR3BBA2	AB35	DDR3BD32	AG37
DDR3ADQM3	E6	DDR3BCAS	AC36	DDR3BD33	AF36
DDR3ADQM4	C17	DDR3BCB00	AF32	DDR3BD34	AG38
DDR3ADQM5	A18	DDR3BCB01	AF34	DDR3BD35	AG34
DDR3ADQM6	D21	DDR3BCB02	AE32	DDR3BD36	AG36
DDR3ADQM7	A22	DDR3BCB03	AF35	DDR3BD37	AH34
DDR3ADQM8	E14	DDR3BCB04	AE33	DDR3BD38	AH35
DDR3ADQS0N	D1	DDR3BCB05	AE36	DDR3BD39	AG32
DDR3ADQS0P	E1	DDR3BCB06	AD36	DDR3BD40	AH32
DDR3ADQS1N	C3	DDR3BCB07	AE34	DDR3BD41	AJ33
DDR3ADQS1P	B3	DDR3BCE0	AB34	DDR3BD42	AH36
DDR3ADQS2N	B5	DDR3BCE1	AA36	DDR3BD43	AJ34
DDR3ADQS2P	A5	DDR3BCKE0	AB39	DDR3BD44	AJ36
DDR3ADQS3N	A7	DDR3BCKE1	AB38	DDR3BD45	AH39
DDR3ADQS3P	B7	DDR3BCLKN	AR39	DDR3BD46	AH38
DDR3ADQS4N	B17	DDR3BCLKOUTN0	AD39	DDR3BD47	AJ37
DDR3ADQS4P	A17	DDR3BCLKOUTN1	AC38	DDR3BD48	AK39
DDR3ADQS5N	A19	DDR3BCLKOUTP0	AD38	DDR3BD49	AK38
DDR3ADQS5P	B19	DDR3BCLKOUTP1	AC39	DDR3BD50	AK36
DDR3ADQS6N	B21	DDR3BCLKP	AR38	DDR3BD51	AK35
DDR3ADQS6P	A21	DDR3BD00	L38	DDR3BD52	AL34
DDR3ADQS7N	B23	DDR3BD01	N34	DDR3BD53	AL36

Copyright © 2012–2017, Texas Instruments Incorporated

Table 4-4. Terminal Functions — By Signal Name (continued)

SIGNAL NAME	BALL NUMBER	SIGNAL NAME	BALL NUMBER	SIGNAL NAME	BALL NUMBER
DDR3BD54	AL37	DVDD15	L32, M11, M17, M19, M31, P29, P31, R28, R30, T29, T31, U28, U30, V29, V31, W28, W30, Y29, Y31, AA28, AA30, AB29, AB31, AC30, AD29, AD31, AE30, AF29	EMIFD09	K38
DDR3BD55	AL33			EMIFD10	K36
DDR3BD56	AN34			EMIFD11	L36
DDR3BD57	AN36			EMIFD12	L35
DDR3BD58	AN33	DVDD15	AF31, AG30, AH31, AJ30, AK31, AL32	EMIFD13	M34
DDR3BD59	AM34			EMIFD14	M36
DDR3BD60	AM35	DVDD18	H25, H27, J26, J28, J32, K25, K27, K31, L24, L26, L30, M29, N30, R6, T7, U6, V5, V7, W6, Y5, Y7, AA6, AB5, AB7, AC6, AD7, AE6, AF7, AG6, AJ26, AK27, AL26, AL28, AM27, AM29	EMIFD15	M35
DDR3BD61	AM38			$\overline{\text{EMIFOE}}$	E37
DDR3BD62	AM36			EMIFRNW	F33
DDR3BD63	AN37			EMIFWAIT0	E38
DDR3BDQM0	N39	DVDD33	AA14	EMIFWAIT1	D39
DDR3BDQM1	P34	EMIFA00	F34	$\overline{\text{EMIFWE}}$	F36
DDR3BDQM2	U39	EMIFA01	F37	EMU00	AA2
DDR3BDQM3	U32	EMIFA02	G36	EMU01	AB2
DDR3BDQM4	AG33	EMIFA03	E39	EMU02	Y3
DDR3BDQM5	AG39	EMIFA04	E34	EMU03	Y4
DDR3BDQM6	AK34	EMIFA05	J34	EMU04	W3
DDR3BDQM7	AM39	EMIFA06	H35	EMU05	W4
DDR3BDQM8	AE37	EMIFA07	K33	EMU06	V4
DDR3BDQS0N	M39	EMIFA08	C35	EMU07	U4
DDR3BDQS0P	M38	EMIFA09	G37	EMU08	U3
DDR3BDQS1N	P38	EMIFA10	F38	EMU09	T3
DDR3BDQS1P	P39	EMIFA11	D35	EMU10	AB4
DDR3BDQS2N	T38	EMIFA12	H36	EMU11	AA3
DDR3BDQS2P	T39	EMIFA13	E35	EMU12	U5
DDR3BDQS3N	V38	EMIFA14	G38	EMU13	T4
DDR3BDQS3P	V39	EMIFA15	F39	EMU14	AB3
DDR3BDQS4N	AF39	EMIFA16	K34	EMU15	R3
DDR3BDQS4P	AF38	EMIFA17	F35	EMU16	T5
DDR3BDQS5N	AJ38	EMIFA18	J35	EMU17	R4
DDR3BDQS5P	AJ39	EMIFA19	G39	EMU18	AA4
DDR3BDQS6N	AL38	EMIFA20	C36	GPIO00	F29
DDR3BDQS6P	AL39	EMIFA21	J36	GPIO01	B30
DDR3BDQS7N	AN39	EMIFA22	H38	GPIO02	D29
DDR3BDQS7P	AN38	EMIFA23	D36	GPIO03	A35
DDR3BDQS8N	AE38	$\overline{\text{EMIFBE0}}$	H34	GPIO04	B29
DDR3BDQS8P	AE39	$\overline{\text{EMIFBE1}}$	H33	GPIO05	E29
DDR3BODT0	AC33	$\overline{\text{EMIFCE0}}$	G33	GPIO06	D30
DDR3BODT1	AD34	$\overline{\text{EMIFCE1}}$	G32	GPIO07	C30
$\overline{\text{DDR3BRAS}}$	AD32	$\overline{\text{EMIFCE2}}$	G34	GPIO08	A30
$\overline{\text{DDR3BRESET}}$	AC32	$\overline{\text{EMIFCE3}}$	E36	GPIO09	G30
DDR3BRZQ0	AA31	EMIFD00	M32	GPIO10	F31
DDR3BRZQ1	P32	EMIFD01	J37	GPIO11	E30
DDR3BRZQ2	AK32	EMIFD02	L33	GPIO12	F30
DDR3BVREFSSTL	AC31	EMIFD03	L34	GPIO13	A31
$\overline{\text{DDR3BWE}}$	AC37	EMIFD04	H39	GPIO14	E32
DVDD15	H7, H9, H11, H13, H15, H17, H19, H21, H23, J6, J8, J10, J12, J14, J16, J18, J20, J22, K7, K9, K11, K13, K15, K17, K19, K21, K23, L8, L10, L12, L14, L16, L18, L20	EMIFD05	J38	GPIO15	B31
		EMIFD06	K37	GPIO16	A36
		EMIFD07	J39	GPIO17	A32
		EMIFD08	K39	GPIO18	C31

Copyright © 2012–2017, Texas Instruments Incorporated

Table 4-4. Terminal Functions — By Signal Name (continued)

SIGNAL NAME	BALL NUMBER	SIGNAL NAME	BALL NUMBER	SIGNAL NAME	BALL NUMBER
GPIO19	B32	HYP1RXP0	AU8	RIORXP2	AW23
GPIO20	A33	HYP1RXP1	AV7	RIORXP3	AV22
GPIO21	D33	HYP1RXP2	AU5	RIOTXN0	AT24
GPIO22	D31	HYP1RXP3	AV4	RIOTXN1	AR23
GPIO23	B35	HYP1RXPMCLK	AF3	RIOTXN2	AP22
GPIO24	B33	HYP1RXPMDAT	AF4	RIOTXN3	AT21
GPIO25	E31	HYP1TXFLCLK	AH3	RIOTXP0	AT25
GPIO26	A34	HYP1TXFLDAT	AH2	RIOTXP1	AR24
GPIO27	D32	HYP1TXN0	AT6	RIOTXP2	AP23
GPIO28	C33	HYP1TXN1	AP5	RIOTXP3	AT22
GPIO29	C34	HYP1TXN2	AR4	RSV000	P2
GPIO30	B36	HYP1TXN3	AT3	RSV001	P1
GPIO31	B34	HYP1TXP0	AT7	RSV002	AN4
HOUT	AE5	HYP1TXP1	AP6	RSV003	AM4
HYP0CLKN	AT10	HYP1TXP2	AR5	RSV004	B24
HYP0CLKP	AT9	HYP1TXP3	AT4	RSV005	A24
HYP0REFRES	AM9	HYP1TXPMCLK	AH1	RSV006	AP38
HYP0RXFLCLK	AJ5	HYP1TXPMDAT	AF2	RSV007	AP39
HYP0RXFLDAT	AJ4	LENDIAN†	F29	RSV008	AU34
HYP0RXN0	AW10	$\overline{\text{LRESETNMIEN}}$	AD4	RSV009	AT34
HYP0RXN1	AU10	$\overline{\text{LRESET}}$	AE4	RSV010	C38
HYP0RXN2	AV9	MAINPLLODSEL†	E32	RSV011	D38
HYP0RXN3	AW7	MDCLK	AP31	RSV012	AK5
HYP0RXP0	AW11	MDIO	AR32	RSV013	F23
HYP0RXP1	AU11	$\overline{\text{NMI}}$	AD5	RSV014	E23
HYP0RXP2	AV10	PACLKSEL	AN30	RSV015	E33
HYP0RXP3	AW8	PASSCLKN	AV34	RSV016	F32
HYP0RXPMCLK	AJ2	PASSCLKP	AV33	RSV017	F26
HYP0RXPMDAT	AG3	PCIECLKN	AW32	RSV018	G26
HYP0TXFLCLK	AJ3	PCIECLKP	AW31	RSV019	AN10
HYP0TXFLDAT	AG5	PCIEREFRES	AM26	RSV020	AM7
HYP0TXN0	AP11	PCIERXN0	AU31	RSV021	AM23
HYP0TXN1	AR10	PCIERXN1	AV30	RSV022	AM28
HYP0TXN2	AP8	PCIERXP0	AU32	RSV023	AM25
HYP0TXN3	AR7	PCIERXP1	AV31	RSV024	AM16
HYP0TXP0	AP12	PCIETXN0	AT30	RSV025	AM14
HYP0TXP1	AR11	PCIETXN1	AR29	RSV026	AN19
HYP0TXP2	AP9	PCIETXP0	AT31	RSV027	D12
HYP0TXP3	AR8	PCIETXP1	AR30	RSV028	D13
HYP0TXPMCLK	AH5	$\overline{\text{POR}}$	AK4	RSV029	F13
HYP0TXPMDAT	AJ1	$\overline{\text{RESETFULL}}$	AD3	RSV030	AD35
HYP1CLKN	AW5	$\overline{\text{RESETSTAT}}$	AC5	RSV031	AC34
HYP1CLKP	AW4	$\overline{\text{RESET}}$	AD2	RSV032	AB32
HYP1REFRES	AM6	RIOREFRES	AM21	RSV060 (66AK2H12/06 only)	AV19
HYP1RXFLCLK	AH4	RIORXN0	AV24	RSV061 (66AK2H12/06 only)	AV18
HYP1RXFLDAT	AG2	RIORXN1	AU22	RSV062 (66AK2H12/06 only)	AT19
HYP1RXN0	AU7	RIORXN2	AW22	RSV063 (66AK2H12/06 only)	AT18
HYP1RXN1	AV6	RIORXN3	AV21	RSV064 (66AK2H12/06 only)	AW20
HYP1RXN2	AU4	RIORXP0	AV25	RSV065 (66AK2H12/06 only)	AW19
HYP1RXN3	AV3	RIORXP1	AU23	RSV066 (66AK2H12/06 only)	AR20

Copyright © 2012–2017, Texas Instruments Incorporated

Table 4-4. Terminal Functions — By Signal Name (continued)

SIGNAL NAME	BALL NUMBER	SIGNAL NAME	BALL NUMBER	SIGNAL NAME	BALL NUMBER
RSV067 (66AK2H12/06 only)	AR19	RSV189	AR1	SPI2DIN	F28
RSV068 (66AK2H12/06 only)	AN16	RSV190	AT1	SPI2DOUT	G28
RSV069 (66AK2H12/06 only)	AM19	RSV191	AP34	SPI2SCS0	B28
RSV070 (66AK2H12/06 only)	AU19	RSV192	AM30	SPI2SCS1	D28
RSV071 (66AK2H12/06 only)	AU20	RSV193	AP32	SPI2SCS2	A29
RSV072 (66AK2H12/06 only)	AT33	RSV194	AN32	SPI2SCS3	E25
RSV073 (66AK2H12/06 only)	AR34	RSV195	AP33	SRIOSGMIICLKN	AW35
RSV74	AT37	SCL0	N1	SRIOSGMIICLKP	AW34
RSV75	AT35	SCL1	N4	SYSCLKN	AK3
RSV76	AU36	SCL2	P4	SYSCLKOUT	AK1
RSV77	AV37	SDA1	N2	SYSCLKP	AL3
RSV78	AU37	SDA2	N3	TCK	AE1
RSV79	AV36	SGMII0RXN	AW28	TDI	AG1
RSV80	AU35	SGMII0RXP	AW29	TDO	AF1
RSV81	AW36	SGMII0TXN	AU28	TIMI0	M2
RSV099	AM11	SGMII0TXP	AU29	TIMI1	M1
RSV161	AW16	SGMII1RXN	AV27	TIMO0	M3
RSV162	AW17	SGMII1RXP	AV28	TIMO1	M4
RSV163	AU16	SGMII1TXN	AT27	TMS	AE2
RSV164	AU17	SGMII1TXP	AT28	$\overline{\text{TRST}}$	AD1
RSV165	AV15	SGMII2RXN	AU25	TSCOMPOUT	AB1
RSV166	AV16	SGMII2RXP	AU26	TSPUSHEVT0	AC2
RSV167	AW13	SGMII2TXN	AR26	TSPUSHEVT1	AC1
RSV168	AW14	SGMII2TXP	AR27	TSREFCLKN	AL1
RSV169	AU13	SGMII3RXN	AW25	TSREFCLKP	AM1
RSV171	AV12	SGMII3RXP	AW26	TSRXCLKOUT0N	AP1
RSV170	AU14	SGMII3TXN	AP25	TSRXCLKOUT0P	AN1
RSV172	AV13	SGMII3TXP	AP26	TSRXCLKOUT1N	AP3
RSV173	AP17	SGMIIREFRES	AM24	TSRXCLKOUT1P	AN3
RSV174	AP18	SPI0CLK	B26	TSSYNCEVT	AC3
RSV175	AR16	SPI0DIN	A26	UART0CTS	L1
RSV176	AR17	SPI0DOUT	A27	UART0RTS	L4
RSV177	AT15	SPI0SCS0	F25	UART0RXD	K4
RSV178	AT16	SPI0SCS1	C25	UART0TXD	K2
RSV179	AP14	SPI0SCS2	E26	UART1CTS	K1
RSV180	AP15	SPI0SCS3	D26	UART1RTS	M5
RSV181	AR13	SPI1CLK	C28	UART1RXD	L2
RSV182	AR14	SPI1DIN	F27	UART1TXD	K3
RSV183	AT12	SPI1DOUT	A28	USBCLKM	V2
RSV184	AT13	SPI1SCS0	B27	USBCLKP	W2
RSV185	AM15	SPI1SCS1	C27	USBDM	T2
RSV186	AR2	SPI1SCS2	D27	USBDP	U2
RSV187	AP2	SPI1SCS3	E27	USBDRVVBUS	L3
RSV188	AC4	SPI2CLK	D25	USBID0	R1

Copyright © 2012–2017, Texas Instruments Incorporated

Table 4-4. Terminal Functions — By Signal Name (continued)

SIGNAL NAME	BALL NUMBER
USBRESREF	AA1
USBRX0M	Y1
USBRX0P	W1
USBTX0M	V1
USBTX0P	U1
USBVBUS	T1
VCL	AP36
VCNTL0	AT39
VCNTL1	AR37
VCNTL2	AR36
VCNTL3	AT38
VCNTL4	AU38
VCNTL5	AR35
VD	AP35
VNWA2	AD11
VNWA3	M23
VNWA4	V11
VP	AA12
VPH	Y13
VPP	L22, M21
VPTX	Y11
VSS	A2, A3, A37, A38, B1, B2, B38, B39, C1, C4, C6, C8, C10, C12, C14, C16, C18, C20, C22, C24, C26, C29, C32, C39, D34, D37, E3, E5, E7, E9, E11, E13, E15, E17, E19
VSS	E21, E28, G23, G25, G27, G29, G31, G35, H4, H6, H8, H12, H14, H18, H20, H24, H26, H28, H29, H30, H32, H37, J1, J2, J3, J4, J5, J7, J9, J11, J13, J15, J17, J19
VSS	J21, J23, J24, J25, J27, J29, J31, J33, K5, K6, K8, K10, K12, K14, K16, K18, K20, K22, K24, K26, K28, K30, K32, K35, L5, L7, L9, L11, L13, L15, L17, L19, L21, L23
VSS	L25, L27, L29, L31, L37, M6, M8, M10, M12, M14, M16, M22, M24, M26, M28, M30, M33, N5, N7, N9, N11, N13, N15, N17, N19, N21, N23, N25, N27, N29
VSS	N31, N35, P5, P6, P8, P10, P12, P14, P16, P18, P20, P22, P24, P26, P28, P30, P33, P37, R2, R5, R7, R9, R11, R13, R15, R17, R19, R21, R23, R25, R27, R29, R31, R35
VSS	T6, T8, T10, T12, T14, T16, T18, T20, T22, T24, T26, T28, T30, T33, T37, U7, U9, U11, U13, U15, U17, U19, U21, U23, U25, U27, U29, U31, U35, V3, V6, V8, V10, V12
VSS	V14, V16, V18, V20, V22, V24, V26, V28, V30, V33, V37, W5, W7, W9, W11, W13, W15, W17, W19, W21, W23, W25, W27, W29, W31, W35, Y2, Y6, Y8, Y10
VSS	Y12, Y14, Y16, Y18, Y20, Y22, Y24, Y26, Y30, Y33, Y37, AA5, AA7, AA9, AA11, AA13, AA15, AA17, AA19, AA21, AA23, AA25, AA27, AA29, AA35, AB6, AB8
VSS	AB10, AB12, AB14, AB16, AB18, AB20, AB22, AB24, AB26, AB30, AB33, AB36, AB37, AC7, AC9, AC11, AC13, AC15, AC17, AC19, AC21, AC23, AC25, AC27
VSS	AC29, AC35, AD6, AD8, AD10, AD12, AD14, AD16, AD18, AD20, AD22, AD24, AD26, AD30, AD33, AD37, AE3, AE7, AE9, AE11, AE13, AE15, AE17, AE19
VSS	AE21, AE23, AE25, AE27, AE29, AE31, AE35, AF6, AF8, AF10, AF12, AF14, AF16, AF18, AF20, AF22, AF24, AF26, AF28, AF30, AF33, AF37, AG4, AG7
VSS	AG9, AG11, AG13, AG15, AG17, AG19, AG21, AG23, AG25, AG27, AG29, AG31, AG35, AH6, AH7, AH8, AH10, AH12, AH14, AH16, AH18, AH20, AH22, AH24
VSS	AH26, AH28, AH30, AH33, AH37, AJ6, AJ7, AJ9, AJ11, AJ13, AJ15, AJ17, AJ19, AJ21, AJ23, AJ25, AJ27, AJ29, AJ31, AJ32, AJ35, AK2, AK6, AK8, AK10
VSS	AK12, AK14, AK16, AK18, AK20, AK22, AK24, AK26, AK28, AK30, AK33, AK37, AL5, AL7, AL9, AL11, AL13, AL15, AL17, AL19, AL21, AL23, AL25, AL27, AL29
VSS	AL31, AL35, AM3, AM8, AM10, AM12, AM13, AM17, AM18, AM20, AM22, AM32, AM33, AM37, AN2, AN5, AN6, AN7, AN8, AN9, AN11, AN12, AN13, AN14
VSS	AN15, AN17, AN18, AN20, AN21, AN22, AN23, AN24, AN25, AN26, AN27, AN28, AN29, AN31, AN35, AP4, AP7, AP10, AP13, AP16, AP19, AP20, AP21, AP24
VSS	AP27, AP28, AP29, AP30, AP37, AR3, AR6, AR9, AR12, AR15, AR18, AR21, AR22, AR25, AR28, AR31, AR33, AT2, AT5, AT8, AT11, AT14, AT17, AT20
VDDAHV	AK11, AK13, AK15, AK17, AK19, AK21, AK23, AK25, AL10, AL12, AL14, AL16, AL18, AL20, AL22, AL24
VDDALV	AF13, AF15, AF17, AF19, AF21, AF23, AG12, AG14, AG16, AG18, AG20, AG22, AH11, AH13, AH15, AH17, AH19, AH21, AH23, AH25, AJ12, AJ14, AJ16, AJ18, AJ20, AJ22, AJ24
VDDUSB	AB13
VNWA1	AG24
VSS	AT23, AT26, AT29, AT32, AT36, AU1, AU2, AU3, AU6, AU9, AU12, AU15, AU18, AU21, AU24, AU27, AU30, AU33, AU39, AV1, AV2, AV5, AV8, AV11
VSS	AV14, AV17, AV20, AV23, AV26, AV29 , AV32, AV35, AV38, AV39, AW2, AW3, AW6, AW9, AW12, AW15, AW18, AW21, AW24, AW27, AW30, AW33, AW37, AW38
XFICLKN (66AK2H14 only)	AU20
XFICLKP (66AK2H14 only)	AU19
XFIMDCLK (66AK2H14 only)	AR34
XFIMDIO (66AK2H14 only)	AT33
XFIREFRES0 (66AK2H14 only)	AN16
XFIREFRES1 (66AK2H14 only)	AM19
XFIRXN0 (66AK2H14 only)	AV19
XFIRXN1 (66AK2H14 only)	AW20
XFIRXP0 (66AK2H14 only)	AV18
XFIRXP1 (66AK2H14 only)	AW19
XFITXN0 (66AK2H14 only)	AT19
XFITXN1 (66AK2H14 only)	AR20
XFITXP0 (66AK2H14 only)	AT18
XFITXP1 (66AK2H14 only)	AR19

Table 4-5. Terminal Functions — By Ball Number

BALL NUMBER	SIGNAL NAME	BALL NUMBER	SIGNAL NAME	BALL NUMBER	SIGNAL NAME
A1	(nopin)	B6	DDR3AD23	C10	VSS
A2	VSS	B7	DDR3ADQS3P	C11	DDR3ABA1
A3	VSS	B8	DDR3AD28	C12	VSS
A4	DDR3AD11	B9	DDR3AA08	C13	DDR3ACAS
A5	DDR3ADQS2P	B10	DDR3AA14	C14	VSS
A6	DDR3ADQM2	B11	DDR3ABA0	C15	DDR3ACB01
A7	DDR3ADQS3N	B12	DDR3ACLKOUTN0	C16	VSS
A8	DDR3AD27	B13	DDR3ACLKOUTN1	C17	DDR3ADQM4
A9	DDR3AA11	B14	DDR3ARESET	C18	VSS
A10	DDR3AA13	B15	DDR3ADQS8P	C19	DDR3AD40
A11	DDR3ACKE1	B16	DDR3ACB02	C20	VSS
A12	DDR3ACLKOUTP0	B17	DDR3ADQS4N	C21	DDR3AD52
A13	DDR3ACLKOUTP1	B18	DDR3AD45	C22	VSS
A14	DDR3ARAS	B19	DDR3ADQS5P	C23	DDR3AD56
A15	DDR3ADQS8N	B20	DDR3AD49	C24	VSS
A16	DDR3ACB00	B21	DDR3ADQS6N	C25	SPI0SCS1
A17	DDR3ADQS4P	B22	DDR3AD61	C26	VSS
A18	DDR3ADQM5	B23	DDR3ADQS7N	C27	SPI1SCS1
A19	DDR3ADQS5N	B24	RSV004	C28	SPI1CLK
A20	DDR3AD48	B25	DDR3ACLKP	C29	VSS
A21	DDR3ADQS6P	B26	SPI0CLK	C30	GPIO07
A22	DDR3ADQM7	B27	SPI1SCS0	C30	BOOTMODE06†
A23	DDR3ADQS7P	B28	SPI2SCS0	C31	GPIO18
A24	RSV005	B29	GPIO04	C31	EMU20†
A25	DDR3ACLKN	B29	BOOTMODE03†	C32	VSS
A26	SPI0DIN	B30	GPIO01	C33	GPIO28
A27	SPI0DOUT	B30	BOOTMODE00†	C33	EMU30†
A28	SPI1DOUT	B31	GPIO15	C34	GPIO29
A29	SPI2SCS2	B31	BOOTMODE_RSVD†	C34	EMU31†
A30	GPIO08	B32	GPIO19	C35	EMIFA08
A30	BOOTMODE07†	B32	EMU21†	C36	EMIFA20
A31	GPIO13	B33	GPIO24	C37	ARMCLKP
A31	BOOTMODE12†	B33	EMU26†	C38	RSV010
A32	GPIO17	B34	GPIO31	C39	VSS
A32	EMU19†	B34	EMU33†	D1	DDR3ADQS0N
A33	GPIO20	B35	GPIO23	D2	DDR3AD07
A33	EMU22†	B35	EMU25†	D3	DDR3AD14
A34	GPIO26	B36	GPIO30	D4	DDR3AD15
A34	EMU28†	B36	EMU32†	D5	DDR3AD18
A35	GPIO03	B37	ARMCLKN	D6	DDR3AD21
A35	BOOTMODE02†	B38	VSS	D7	DDR3AD31
A36	GPIO16	B39	VSS	D8	DDR3AA09
A36	DDR3A_REMAP_EN†	C1	VSS	D9	DDR3AA07
A37	VSS	C2	DDR3ADQM0	D10	DDR3AA15
A38	VSS	C3	DDR3ADQS1N	D11	DDR3ACE0
A39	(nopin)	C4	VSS	D12	RSV027
B1	VSS	C5	DDR3AD22	D13	RSV028
B2	VSS	C6	VSS	D14	DDR3ACB06
B3	DDR3ADQS1P	C7	DDR3AD24	D15	DDR3ACB04
B4	DDR3AD12	C8	VSS	D16	DDR3AD36
B5	DDR3ADQS2N	C9	DDR3AA06	D17	DDR3AD37

Copyright © 2012–2017, Texas Instruments Incorporated

Table 4-5. Terminal Functions — By Ball Number (continued)

BALL NUMBER	SIGNAL NAME	BALL NUMBER	SIGNAL NAME	BALL NUMBER	SIGNAL NAME
D18	DDR3AD46	E25	SPI2SCS3	F31	BOOTMODE09†
D19	DDR3AD41	E26	SPI0SCS2	F32	RSV016
D20	DDR3AD50	E27	SPI1SCS3	F33	EMIFRNW
D21	DDR3ADQM6	E28	VSS	F34	EMIFA00
D22	DDR3AD63	E29	GPIO05	F35	EMIFA17
D23	DDR3AD58	E29	BOOTMODE04†	F36	$\overline{\text{EMIFWE}}$
D24	CORESEL2	E30	GPIO11	F37	EMIFA01
D25	SPI2CLK	E30	BOOTMODE10†	F38	EMIFA10
D26	SPI0SCS3	E31	GPIO25	F39	EMIFA15
D27	SPI1SCS2	E31	EMU27†	G1	DDR3AD00
D28	SPI2SCS1	E32	GPIO14	G2	DDR3AD03
D29	GPIO02	E32	MAINPLLODSEL†	G3	DDR3AD10
D29	BOOTMODE01†	E33	RSV015	G4	DDR3AD16
D30	GPIO06	E34	EMIFA04	G5	DDR3AD20
D30	BOOTMODE05†	E35	EMIFA13	G6	DDR3AD29
D31	GPIO22	E36	$\overline{\text{EMIFCE3}}$	G7	DDR3AD30
D31	EMU24†	E37	$\overline{\text{EMIFOE}}$	G8	DDR3AA02
D32	GPIO27	E38	EMIFWAIT0	G9	DDR3AA01
D32	EMU29†	E39	EMIFA03	G10	DDR3AA03
D33	GPIO21	F1	DDR3AD02	G11	DDR3ABA2
D33	EMU23†	F2	DDR3AD06	G12	DDR3ACKE0
D34	VSS	F3	DDR3ADQM1	G13	DDR3AODT1
D35	EMIFA11	F4	DDR3AD09	G14	DDR3AVREFSSTL
D36	EMIFA23	F5	DDR3AD19	G15	DDR3ACB07
D37	VSS	F6	DDR3AD26	G16	DDR3AD33
D38	RSV011	F7	DDR3AD25	G17	DDR3AD35
D39	EMIFWAIT1	F8	DDR3AA05	G18	DDR3AD42
E1	DDR3ADQS0P	F9	DDR3AA04	G19	DDR3AD44
E2	DDR3AD05	F10	DDR3AA10	G20	DDR3AD51
E3	VSS	F11	$\overline{\text{DDR3ACE1}}$	G21	DDR3AD55
E4	DDR3AD08	F12	$\overline{\text{DDR3AWE}}$	G22	DDR3AD57
E5	VSS	F13	RSV029	G23	VSS
E6	DDR3ADQM3	F14	DDR3ACB05	G24	CORESEL3
E7	VSS	F15	DDR3ACB03	G24	ARMAVSSHARED†
E8	DDR3AA00	F16	DDR3AD34	G25	VSS
E9	VSS	F17	DDR3AD38	G26	RSV018
E10	DDR3AA12	F18	DDR3AD47	G27	VSS
E11	VSS	F19	DDR3AD43	G28	SPI2DOUT
E12	DDR3AODT0	F20	DDR3AD54	G29	VSS
E13	VSS	F21	DDR3AD62	G30	GPIO09
E14	DDR3ADQM8	F22	DDR3AD59	G30	BOOTMODE08†
E15	VSS	F23	RSV013	G31	VSS
E16	DDR3AD32	F24	CORESEL0	G32	$\overline{\text{EMIFCE1}}$
E17	VSS	F25	SPI0SCS0	G33	$\overline{\text{EMIFCE0}}$
E18	DDR3AD39	F26	RSV017	G34	$\overline{\text{EMIFCE2}}$
E19	VSS	F27	SPI1DIN	G35	VSS
E20	DDR3AD53	F28	SPI2DIN	G36	EMIFA02
E21	VSS	F29	GPIO00	G37	EMIFA09
E22	DDR3AD60	F30	GPIO12	G38	EMIFA14
E23	RSV014	F30	BOOTMODE11†	G39	EMIFA19
E24	CORESEL1	F31	GPIO10	H1	DDR3AD04

Copyright © 2012–2017, Texas Instruments Incorporated

Table 4-5. Terminal Functions — By Ball Number (continued)

BALL NUMBER	SIGNAL NAME	BALL NUMBER	SIGNAL NAME	BALL NUMBER	SIGNAL NAME
H2	DDR3AD01	J13	VSS	K24	VSS
H3	DDR3AD13	J14	DVDD15	K25	DVDD18
H4	VSS	J15	VSS	K26	VSS
H5	DDR3AD17	J16	DVDD15	K27	DVDD18
H6	VSS	J17	VSS	K28	VSS
H7	DVDD15	J18	DVDD15	K29	CVDD
H8	VSS	J19	VSS	K30	VSS
H9	DVDD15	J20	DVDD15	K31	DVDD18
H10	DDR3ARZQ1	J21	VSS	K32	VSS
H11	DVDD15	J22	DVDD15	K33	EMIFA07
H12	VSS	J23	VSS	K34	EMIFA16
H13	DVDD15	J24	VSS	K35	VSS
H14	VSS	J25	VSS	K36	EMIFD10
H15	DVDD15	J26	DVDD18	K37	EMIFD06
H16	DDR3ARZQ0	J27	VSS	K38	EMIFD09
H17	DVDD15	J28	DVDD18	K39	EMIFD08
H18	VSS	J29	VSS	L1	UART0CTS
H19	DVDD15	J30	CVDD	L2	UART1RXD
H20	VSS	J31	VSS	L3	USBDRVVBUS
H21	DVDD15	J32	DVDD18	L4	UART0RTS
H22	DDR3ARZQ2	J33	VSS	L5	VSS
H23	DVDD15	J34	EMIFA05	L6	CVDD
H24	VSS	J35	EMIFA18	L7	VSS
H25	DVDD18	J36	EMIFA21	L8	DVDD15
H26	VSS	J37	EMIFD01	L9	VSS
H27	DVDD18	J38	EMIFD05	L10	DVDD15
H28	VSS	J39	EMIFD07	L11	VSS
H29	VSS	K1	UART1CTS	L12	DVDD15
H30	VSS	K2	UART0TXD	L13	VSS
H31	CVDD	K3	UART1TXD	L14	DVDD15
H32	VSS	K4	UART0RXD	L15	VSS
H33	$\overline{\text{EMIFBE1}}$	K5	VSS	L16	DVDD15
H34	$\overline{\text{EMIFBE0}}$	K6	VSS	L17	VSS
H35	EMIFA06	K7	DVDD15	L18	DVDD15
H36	EMIFA12	K8	VSS	L19	VSS
H37	VSS	K9	DVDD15	L20	DVDD15
H38	EMIFA22	K10	VSS	L21	VSS
H39	EMIFD04	K11	DVDD15	L22	VPP
J1	VSS	K12	VSS	L23	VSS
J2	VSS	K13	DVDD15	L24	DVDD18
J3	VSS	K14	VSS	L25	VSS
J4	VSS	K15	DVDD15	L26	DVDD18
J5	VSS	K16	VSS	L27	VSS
J6	DVDD15	K17	DVDD15	L28	CVDD
J7	VSS	K18	VSS	L29	VSS
J8	DVDD15	K19	DVDD15	L30	DVDD18
J9	VSS	K20	VSS	L31	VSS
J10	DVDD15	K21	DVDD15	L32	DVDD15
J11	VSS	K22	VSS	L33	EMIFD02
J12	DVDD15	K23	DVDD15	L34	EMIFD03

Copyright © 2012–2017, Texas Instruments Incorporated

Table 4-5. Terminal Functions — By Ball Number (continued)

BALL NUMBER	SIGNAL NAME	BALL NUMBER	SIGNAL NAME	BALL NUMBER	SIGNAL NAME
L35	EMIFD12	N6	CVDD	P18	VSS
L36	EMIFD11	N7	VSS	P19	CVDD
L37	VSS	N8	CVDD	P20	VSS
L38	DDR3BD00	N9	VSS	P21	CVDD
L39	DDR3BD03	N10	CVDD	P22	VSS
M1	TIMI1	N11	VSS	P23	CVDD
M1	AVSIFSEL1†	N12	CVDD	P24	VSS
M2	TIMI0	N13	VSS	P25	CVDD
M2	AVSIFSEL0†	N14	CVDD	P26	VSS
M3	TIMO0	N15	VSS	P27	CVDD
M4	TIMO1	N16	CVDD	P28	VSS
M5	UART1RTS	N17	VSS	P29	DVDD15
M6	VSS	N18	CVDD	P30	VSS
M7	CVDD	N19	VSS	P31	DVDD15
M8	VSS	N20	AVDDA2	P32	DDR3BRZQ1
M9	CVDD	N21	VSS	P33	VSS
M10	VSS	N22	CVDD	P34	DDR3BDQM1
M11	DVDD15	N23	VSS	P35	DDR3BD10
M12	VSS	N24	CVDD	P36	DDR3BD15
M13	AVDDA7	N25	VSS	P37	VSS
M14	VSS	N26	CVDD	P38	DDR3BDQS1N
M15	AVDDA8	N27	VSS	P39	DDR3BDQS1P
M16	VSS	N28	AVDDA3	R1	USBID0
M17	DVDD15	N29	VSS	R2	VSS
M18	AVDDA9	N30	DVDD18	R3	EMU15
M19	DVDD15	N31	VSS	R4	EMU17
M20	AVDDA10	N32	DDR3BD13	R5	VSS
M21	VPP	N33	DDR3BD04	R6	DVDD18
M22	VSS	N34	DDR3BD01	R7	VSS
M23	VNWA3	N35	VSS	R8	CVDD
M24	VSS	N36	DDR3BD06	R9	VSS
M25	CVDD	N37	DDR3BD05	R10	CVDD
M26	VSS	N38	DDR3BD07	R11	VSS
M27	CVDD	N39	DDR3BDQM0	R12	CVDD
M28	VSS	P1	RSV001	R13	VSS
M29	DVDD18	P2	RSV000	R14	CVDD
M30	VSS	P3	SDA0	R15	VSS
M31	DVDD15	P4	SCL2	R16	CVDD
M32	EMIFD00	P5	VSS	R17	VSS
M33	VSS	P6	VSS	R18	CVDD
M34	EMIFD13	P7	CVDD	R19	VSS
M35	EMIFD15	P8	VSS	R20	CVDD
M36	EMIFD14	P9	CVDD	R21	VSS
M37	DDR3BD02	P10	VSS	R22	CVDDT1
M38	DDR3BDQS0P	P11	AVDDA6	R23	VSS
M39	DDR3BDQS0N	P12	VSS	R24	CVDD
N1	SCL0	P13	CVDD	R25	VSS
N2	SDA1	P14	VSS	R26	CVDD
N3	SDA2	P15	CVDD	R27	VSS
N4	SCL1	P16	VSS	R28	DVDD15
N5	VSS	P17	CVDD	R29	VSS

Copyright © 2012–2017, Texas Instruments Incorporated

Table 4-5. Terminal Functions — By Ball Number (continued)

BALL NUMBER	SIGNAL NAME	BALL NUMBER	SIGNAL NAME	BALL NUMBER	SIGNAL NAME
R30	DVDD15	U3	EMU08	V15	CVDD
R31	VSS	U4	EMU07	V16	VSS
R32	DDR3BD09	U5	EMU12	V17	CVDD1
R33	DDR3BD14	U6	DVDD18	V18	VSS
R34	DDR3BD17	U7	VSS	V19	CVDD
R35	VSS	U8	CVDD	V20	VSS
R36	DDR3BD20	U9	VSS	V21	CVDD1
R37	DDR3BD19	U10	CVDD	V22	VSS
R38	DDR3BD12	U11	VSS	V23	CVDD
R39	DDR3BD11	U12	CVDD	V24	VSS
T1	USBVBUS	U13	VSS	V25	CVDD
T2	USBDM	U14	CVDD1	V26	VSS
T3	EMU09	U15	VSS	V27	CVDD
T4	EMU13	U16	CVDD1	V28	VSS
T5	EMU16	U17	VSS	V29	DVDD15
T6	VSS	U18	CVDD	V30	VSS
T7	DVDD18	U19	VSS	V31	DVDD15
T8	VSS	U20	CVDD1	V32	DDR3BD30
T9	CVDD	U21	VSS	V33	VSS
T10	VSS	U22	CVDDT1	V34	DDR3BA05
T11	CVDD	U23	VSS	V35	DDR3BD24
T12	VSS	U24	CVDD	V36	DDR3BD31
T13	CVDD1	U25	VSS	V37	VSS
T14	VSS	U26	CVDD	V38	DDR3BDQS3N
T15	CVDD	U27	VSS	V39	DDR3BDQS3P
T16	VSS	U28	DVDD15	W1	USBRX0P
T17	CVDD	U29	VSS	W2	USBCLKP
T18	VSS	U30	DVDD15	W3	EMU04
T19	CVDD	U31	VSS	W4	EMU05
T20	VSS	U32	DDR3BDQM3	W5	VSS
T21	CVDD1	U33	DDR3BD29	W6	DVDD18
T22	VSS	U34	DDR3BD26	W7	VSS
T23	CVDD	U35	VSS	W8	CVDD
T24	VSS	U36	DDR3BD25	W9	VSS
T25	CVDD	U37	DDR3BD21	W10	CVDD
T26	VSS	U38	DDR3BD23	W11	VSS
T27	CVDD	U39	DDR3BDQM2	W12	CVDD
T28	VSS	V1	USBTX0M	W13	VSS
T29	DVDD15	V2	USBCLKM	W14	CVDD
T30	VSS	V3	VSS	W15	VSS
T31	DVDD15	V4	EMU06	W16	CVDD1
T32	DDR3BD08	V5	DVDD18	W17	VSS
T33	VSS	V6	VSS	W18	CVDD
T34	DDR3BD16	V7	DVDD18	W19	VSS
T35	DDR3BD18	V8	VSS	W20	CVDD
T36	DDR3BD22	V9	CVDD	W21	VSS
T37	VSS	V10	VSS	W22	CVDDT1
T38	DDR3BDQS2N	V11	VNWA4	W23	VSS
T39	DDR3BDQS2P	V12	VSS	W24	CVDD
U1	USBTX0P	V13	CVDD1	W25	VSS
U2	USBDP	V14	VSS	W26	CVDD

Copyright © 2012–2017, Texas Instruments Incorporated

Table 4-5. Terminal Functions — By Ball Number (continued)

BALL NUMBER	SIGNAL NAME	BALL NUMBER	SIGNAL NAME	BALL NUMBER	SIGNAL NAME
W27	VSS	Y39	DDR3BA13	AB12	VSS
W28	DVDD15	AA1	USBRESREF	AB13	VDDUSB
W29	VSS	AA2	EMU00	AB14	VSS
W30	DVDD15	AA3	EMU11	AB15	CVDD
W31	VSS	AA4	EMU18	AB16	VSS
W32	DDR3BA02	AA5	VSS	AB17	CVDD
W33	DDR3BA01	AA6	DVDD18	AB18	VSS
W34	DDR3BA04	AA7	VSS	AB19	CVDD
W35	VSS	AA8	CVDD	AB20	VSS
W36	DDR3BA06	AA9	VSS	AB21	CVDD
W37	DDR3BA07	AA10	CVDD	AB22	VSS
W38	DDR3BD27	AA11	VSS	AB23	CVDD
W39	DDR3BD28	AA12	VP	AB24	VSS
Y1	USBRX0M	AA13	VSS	AB25	CVDD
Y2	VSS	AA14	DVDD33	AB26	VSS
Y3	EMU02	AA15	VSS	AB27	CVDD
Y4	EMU03	AA16	CVDD	AB28	AVDDA12
Y5	DVDD18	AA17	VSS	AB29	DVDD15
Y6	VSS	AA18	CVDD	AB30	VSS
Y7	DVDD18	AA19	VSS	AB31	DVDD15
Y8	VSS	AA20	CVDD	AB32	RSV032
Y9	CVDD	AA21	VSS	AB33	VSS
Y10	VSS	AA22	CVDD	AB34	$\overline{\text{DDR3BCE0}}$
Y11	VPTX	AA23	VSS	AB35	DDR3BBA2
Y12	VSS	AA24	CVDD	AB36	VSS
Y13	VPH	AA25	VSS	AB37	VSS
Y14	VSS	AA26	CVDD	AB38	DDR3BCKE1
Y15	CVDD	AA27	VSS	AB39	DDR3BCKE0
Y16	VSS	AA28	DVDD15	AC1	TSPUSHEVT1
Y17	CVDD	AA29	VSS	AC2	TSPUSHEVT0
Y18	VSS	AA30	DVDD15	AC3	TSSYNCEVT
Y19	CVDD	AA31	DDR3BRZQ0	AC4	RSV188
Y20	VSS	AA32	DDR3BA00	AC5	$\overline{\text{RESETSTAT}}$
Y21	CVDD	AA33	DDR3BA08	AC6	DVDD18
Y22	VSS	AA34	DDR3BBA1	AC7	VSS
Y23	CVDD	AA35	VSS	AC8	CVDD
Y24	VSS	AA36	$\overline{\text{DDR3BCE1}}$	AC9	VSS
Y25	CVDD	AA37	DDR3BBA0	AC10	CVDD
Y26	VSS	AA38	DDR3BA14	AC11	VSS
Y27	CVDD	AA39	DDR3BA11	AC12	CVDD
Y28	AVDDA11	AB1	TSCOMPOUT	AC13	VSS
Y29	DVDD15	AB2	EMU01	AC14	CVDD
Y30	VSS	AB3	EMU14	AC15	VSS
Y31	DVDD15	AB4	EMU10	AC16	CVDD
Y32	DDR3BA09	AB5	DVDD18	AC17	VSS
Y33	VSS	AB6	VSS	AC18	CVDD1
Y34	DDR3BA03	AB7	DVDD18	AC19	VSS
Y35	DDR3BA12	AB8	VSS	AC20	CVDD
Y36	DDR3BA15	AB9	CVDD	AC21	VSS
Y37	VSS	AB10	VSS	AC22	CVDD
Y38	DDR3BA10	AB11	CVDD	AC23	VSS

Copyright © 2012–2017, Texas Instruments Incorporated

Table 4-5. Terminal Functions — By Ball Number (continued)

BALL NUMBER	SIGNAL NAME	BALL NUMBER	SIGNAL NAME	BALL NUMBER	SIGNAL NAME
AC24	CVDD	AD36	DDR3BCB06	AF9	CVDD
AC25	VSS	AD37	VSS	AF10	VSS
AC26	CVDD	AD38	DDR3BCLKOUTP0	AF11	AVDDA1
AC27	VSS	AD39	DDR3BCLKOUTN0	AF12	VSS
AC28	AVDDA13	AE1	TCK	AF13	VDDALV
AC29	VSS	AE2	TMS	AF14	VSS
AC30	DVDD15	AE3	VSS	AF15	VDDALV
AC31	DDR3BVREFSSTL	AE4	$\overline{\text{LRESET}}$	AF16	VSS
AC32	$\overline{\text{DDR3BRESET}}$	AE5	HOUT	AF17	VDDALV
AC33	DDR3BODT0	AE6	DVDD18	AF18	VSS
AC34	RSV031	AE7	VSS	AF19	VDDALV
AC35	VSS	AE8	CVDD	AF20	VSS
AC36	$\overline{\text{DDR3BCAS}}$	AE9	VSS	AF21	VDDALV
AC37	$\overline{\text{DDR3BWE}}$	AE10	CVDD	AF22	VSS
AC38	DDR3BCLKOUTN1	AE11	VSS	AF23	VDDALV
AC39	DDR3BCLKOUTP1	AE12	CVDD	AF24	VSS
AD1	$\overline{\text{TRST}}$	AE13	VSS	AF25	CVDD
AD2	$\overline{\text{RESET}}$	AE14	CVDD	AF26	VSS
AD3	$\overline{\text{RESETFULL}}$	AE15	VSS	AF27	CVDD
AD4	$\overline{\text{LRESETNMIEN}}$	AE16	CVDD	AF28	VSS
AD5	$\overline{\text{NMI}}$	AE17	VSS	AF29	DVDD15
AD6	VSS	AE18	CVDD	AF30	VSS
AD7	DVDD18	AE19	VSS	AF31	DVDD15
AD8	VSS	AE20	CVDD	AF32	DDR3BCB00
AD9	CVDD	AE21	VSS	AF33	VSS
AD10	VSS	AE22	CVDD	AF34	DDR3BCB01
AD11	VNWA2	AE23	VSS	AF35	DDR3BCB03
AD12	VSS	AE24	CVDD	AF36	DDR3BD33
AD13	CVDD	AE25	VSS	AF37	VSS
AD14	VSS	AE26	CVDD	AF38	DDR3BDQS4P
AD15	CVDD	AE27	VSS	AF39	DDR3BDQS4N
AD16	VSS	AE28	AVDDA15	AG1	TDI
AD17	CVDD1	AE29	VSS	AG2	HYP1RXFLDAT
AD18	VSS	AE30	DVDD15	AG3	HYP0RXPMDAT
AD19	CVDD1	AE31	VSS	AG4	VSS
AD20	VSS	AE32	DDR3BCB02	AG5	HYP0TXFLDAT
AD21	CVDD	AE33	DDR3BCB04	AG6	DVDD18
AD22	VSS	AE34	DDR3BCB07	AG7	VSS
AD23	CVDD	AE35	VSS	AG8	CVDD
AD24	VSS	AE36	DDR3BCB05	AG9	VSS
AD25	CVDD	AE37	DDR3BDQM8	AG10	CVDD
AD26	VSS	AE38	DDR3BDQS8N	AG11	VSS
AD27	CVDD	AE39	DDR3BDQS8P	AG12	VDDALV
AD28	AVDDA14	AF1	TDO	AG13	VSS
AD29	DVDD15	AF2	HYP1TXPMDAT	AG14	VDDALV
AD30	VSS	AF3	HYP1RXPMCLK	AG15	VSS
AD31	DVDD15	AF4	HYP1RXPMDAT	AG16	VDDALV
AD32	$\overline{\text{DDR3BRAS}}$	AF5	BOOTCOMPLETE	AG17	VSS
AD33	VSS	AF6	VSS	AG18	VDDALV
AD34	DDR3BODT1	AF7	DVDD18	AG19	VSS
AD35	RSV030	AF8	VSS	AG20	VDDALV

Copyright © 2012–2017, Texas Instruments Incorporated

Table 4-5. Terminal Functions — By Ball Number (continued)

BALL NUMBER	SIGNAL NAME	BALL NUMBER	SIGNAL NAME	BALL NUMBER	SIGNAL NAME
AG21	VSS	AH33	VSS	AK6	VSS
AG22	VDDALV	AH34	DDR3BD37	AK7	CVDD
AG23	VSS	AH35	DDR3BD38	AK8	VSS
AG24	VNWA1	AH36	DDR3BD42	AK9	CVDD
AG25	VSS	AH37	VSS	AK10	VSS
AG26	AVDDA5	AH38	DDR3BD46	AK11	VDDAHV
AG27	VSS	AH39	DDR3BD45	AK12	VSS
AG28	CVDD	AJ1	HYP0TXPMDAT	AK13	VDDAHV
AG29	VSS	AJ2	HYP0RXPMCLK	AK14	VSS
AG30	DVDD15	AJ3	HYP0TXFLCLK	AK15	VDDAHV
AG31	VSS	AJ4	HYP0RXFLDAT	AK16	VSS
AG32	DDR3BD39	AJ5	HYP0RXFLCLK	AK17	VDDAHV
AG33	DDR3BDQM4	AJ6	VSS	AK18	VSS
AG34	DDR3BD35	AJ7	VSS	AK19	VDDAHV
AG35	VSS	AJ8	CVDD	AK20	VSS
AG36	DDR3BD36	AJ9	VSS	AK21	VDDAHV
AG37	DDR3BD32	AJ10	CVDD	AK22	VSS
AG38	DDR3BD34	AJ11	VSS	AK23	VDDAHV
AG39	DDR3BDQM5	AJ12	VDDALV	AK24	VSS
AH1	HYP1TXPMCLK	AJ13	VSS	AK25	VDDAHV
AH2	HYP1TXFLDAT	AJ14	VDDALV	AK26	VSS
AH3	HYP1TXFLCLK	AJ15	VSS	AK27	DVDD18
AH4	HYP1RXFLCLK	AJ16	VDDALV	AK28	VSS
AH5	HYP0TXPMCLK	AJ17	VSS	AK29	CVDD
AH6	VSS	AJ18	VDDALV	AK30	VSS
AH7	VSS	AJ19	VSS	AK31	DVDD15
AH8	VSS	AJ20	VDDALV	AK32	DDR3BRZQ2
AH9	CVDD	AJ21	VSS	AK33	VSS
AH10	VSS	AJ22	VDDALV	AK34	DDR3BDQM6
AH11	VDDALV	AJ23	VSS	AK35	DDR3BD51
AH12	VSS	AJ24	VDDALV	AK36	DDR3BD50
AH13	VDDALV	AJ25	VSS	AK37	VSS
AH14	VSS	AJ26	DVDD18	AK38	DDR3BD49
AH15	VDDALV	AJ27	VSS	AK39	DDR3BD48
AH16	VSS	AJ28	CVDD	AL1	TSREFCLKN
AH17	VDDALV	AJ29	VSS	AL2	ALTCORECLKN
AH18	VSS	AJ30	DVDD15	AL3	SYSCLKP
AH19	VDDALV	AJ31	VSS	AL4	CORECLKSEL
AH20	VSS	AJ32	VSS	AL5	VSS
AH21	VDDALV	AJ33	DDR3BD41	AL6	CVDD
AH22	VSS	AJ34	DDR3BD43	AL7	VSS
AH23	VDDALV	AJ35	VSS	AL8	CVDD
AH24	VSS	AJ36	DDR3BD44	AL9	VSS
AH25	VDDALV	AJ37	DDR3BD47	AL10	VDDAHV
AH26	VSS	AJ38	DDR3BDQS5N	AL11	VSS
AH27	CVDD	AJ39	DDR3BDQS5P	AL12	VDDAHV
AH28	VSS	AK1	SYSCLKOUT	AL13	VSS
AH29	AVDDA4	AK2	VSS	AL14	VDDAHV
AH30	VSS	AK3	SYSCLKN	AL15	VSS
AH31	DVDD15	AK4	$\overline{\text{POR}}$	AL16	VDDAHV
AH32	DDR3BD40	AK5	RSV012	AL17	VSS

Copyright © 2012–2017, Texas Instruments Incorporated

Table 4-5. Terminal Functions — By Ball Number (continued)

BALL NUMBER	SIGNAL NAME	BALL NUMBER	SIGNAL NAME	BALL NUMBER	SIGNAL NAME
AL18	VDDAHV	AM27	DVDD18	AN36	DDR3BD57
AL19	VSS	AM28	RSV022	AN37	DDR3BD63
AL20	VDDAHV	AM29	DVDD18	AN38	DDR3BDQS7P
AL21	VSS	AM30	RSV192	AN39	DDR3BDQS7N
AL22	VDDAHV	AM31	CVDD	AP1	TSRXCLKOUT0N
AL23	VSS	AM32	VSS	AP2	RSV187
AL24	VDDAHV	AM33	VSS	AP3	TSRXCLKOUT1N
AL25	VSS	AM34	DDR3BD59	AP4	VSS
AL26	DVDD18	AM35	DDR3BD60	AP5	HYP1TXN1
AL27	VSS	AM36	DDR3BD62	AP6	HYP1TXP1
AL28	DVDD18	AM37	VSS	AP7	VSS
AL29	VSS	AM38	DDR3BD61	AP8	HYP0TXN2
AL30	CVDD	AM39	DDR3BDQM7	AP9	HYP0TXP2
AL31	VSS	AN1	TSRXCLKOUT0P	AP10	VSS
AL32	DVDD15	AN2	VSS	AP11	HYP0TXN0
AL33	DDR3BD55	AN3	TSRXCLKOUT1P	AP12	HYP0TXP0
AL34	DDR3BD52	AN4	RSV002	AP13	VSS
AL35	VSS	AN5	VSS	AP14	RSV179
AL36	DDR3BD53	AN6	VSS	AP15	RSV180
AL37	DDR3BD54	AN7	VSS	AP16	VSS
AL38	DDR3BDQS6N	AN8	VSS	AP17	RSV173
AL39	DDR3BDQS6P	AN9	VSS	AP18	RSV174
AM1	TSREFCLKP	AN10	RSV019	AP19	VSS
AM2	ALTCORECLKP	AN11	VSS	AP20	VSS
AM3	VSS	AN12	VSS	AP21	VSS
AM4	RSV003	AN13	VSS	AP22	RIOTXN2
AM5	CVDD	AN14	VSS	AP23	RIOTXP2
AM6	HYP1REFRES	AN15	VSS	AP24	VSS
AM7	RSV020	AN16 (66AK2H14 only)	XFIREFRES0	AP25	SGMII3TXN
AM8	VSS			AP26	SGMII3TXP
AM9	HYP0REFRES	AN16 (66AK2H12/06 only)	RSV068	AP27	VSS
AM10	VSS			AP28	VSS
AM11	RSV099	AN17	VSS	AP29	VSS
AM12	VSS	AN18	VSS	AP30	VSS
AM13	VSS	AN19	RSV026	AP31	MDCLK
AM14	RSV025	AN20	VSS	AP32	RSV193
AM15	RSV185	AN21	VSS	AP33	RSV195
AM16	RSV024	AN22	VSS	AP34	RSV191
AM17	VSS	AN23	VSS	AP35	VD
AM18	VSS	AN24	VSS	AP36	VCL
AM19 (66AK2H14 only)	XFIREFRES1	AN25	VSS	AP37	VSS
		AN26	VSS	AP38	RSV006
AM19 (66AK2H12/06 only)	RSV069	AN27	VSS	AP39	RSV007
		AN28	VSS	AR1	RSV189
AM20	VSS	AN29	VSS	AR2	RSV186
AM21	RIOREFRES	AN30	PACLKSEL	AR3	VSS
AM22	VSS	AN31	VSS	AR4	HYP1TXN2
AM23	RSV021	AN32	RSV194	AR5	HYP1TXP2
AM24	SGMIIREFRES	AN33	DDR3BD58	AR6	VSS
AM25	RSV023	AN34	DDR3BD56	AR7	HYP0TXN3
AM26	PCIEREFRES	AN35	VSS	AR8	HYP0TXP3

Copyright © 2012–2017, Texas Instruments Incorporated

Table 4-5. Terminal Functions — By Ball Number (continued)

BALL NUMBER	SIGNAL NAME	BALL NUMBER	SIGNAL NAME	BALL NUMBER	SIGNAL NAME
AR9	VSS	AT12	RSV183	AU15	VSS
AR10	HYP0TXN1	AT13	RSV184	AU16	RSV163
AR11	HYP0TXP1	AT14	VSS	AU17	RSV164
AR12	VSS	AT15	RSV177	AU18	VSS
AR13	RSV181	AT16	RSV178	AU19 (66AK2H12/06 only)	RSV070
AR14	RSV182	AT17	VSS		
AR15	VSS	AT18 (66AK2H14 only)	XFITXP0	AU19 (66AK2H14 only)	XFICLKP
AR16	RSV175				
AR17	RSV176	AT18 (66AK2H12/06 only)	RSV063	AU20 (66AK2H12/06 only)	RSV071
AR18	VSS				
AR19 (66AK2H14 only)	XFITXP1	AT19 (66AK2H14 only)	XFITXN0	AU20 (66AK2H14 only)	XFICLKN
AR19 (66AK2H12/06 only)	RSV067	AT19 (66AK2H12/06 only)	RSV062	AU21	VSS
				AU22	RIORXN1
AR20 (66AK2H14 only)	XFITXN1	AT20	VSS	AU23	RIORXP1
		AT21	RIOTXN3	AU24	VSS
AR20 (66AK2H12/06 only)	RSV066	AT22	RIOTXP3	AU25	SGMII2RXN
		AT23	VSS	AU26	SGMII2RXP
AR21	VSS	AT24	RIOTXN0	AU27	VSS
AR22	VSS	AT25	RIOTXP0	AU28	SGMII0TXN
AR23	RIOTXN1	AT26	VSS	AU29	SGMII0TXP
AR24	RIOTXP1	AT27	SGMII1TXN	AU30	VSS
AR25	VSS	AT28	SGMII1TXP	AU31	PCIERXN0
AR26	SGMII2TXN	AT29	VSS	AU32	PCIERXP0
AR27	SGMII2TXP	AT30	PCIETXN0	AU33	VSS
AR28	VSS	AT31	PCIETXP0	AU34	RSV008
AR29	PCIETXN1	AT32	VSS	AU35	RSV80
AR30	PCIETXP1	AT33 (66AK2H14 only)	XFIMDIO	AU36	RSV76
AR31	VSS			AU37	RSV78
AR32	MDIO	AT33 (66AK2H12/06 only)	RSV072	AU38	VCNTL4
AR33	VSS			AU39	VSS
AR34 (66AK2H14 only)	XFIMDCLK	AT34	RSV009	AV1	VSS
		AT35	RSV75	AV2	VSS
AR34 (66AK2H12/06 only)	RSV073	AT36	VSS	AV3	HYP1RXN3
		AT37	RSV74	AV4	HYP1RXP3
AR35	VCNTL5	AT38	VCNTL3	AV5	VSS
AR36	VCNTL2	AT39	VCNTL0	AV6	HYP1RXN1
AR37	VCNTL1	AU1	VSS	AV7	HYP1RXP1
AR38	DDR3BCLKP	AU2	VSS	AV8	VSS
AR39	DDR3BCLKN	AU3	VSS	AV9	HYP0RXN2
AT1	RSV190	AU4	HYP1RXN2	AV10	HYP0RXP2
AT2	VSS	AU5	HYP1RXP2	AV11	VSS
AT3	HYP1TXN3	AU6	VSS	AV12	RSV171
AT4	HYP1TXP3	AU7	HYP1RXN0	AV13	RSV172
AT5	VSS	AU8	HYP1RXP0	AV14	VSS
AT6	HYP1TXN0	AU9	VSS	AV15	RSV165
AT7	HYP1TXP0	AU10	HYP0RXN1	AV16	RSV166
AT8	VSS	AU11	HYP0RXP1	AV17	VSS
AT9	HYP0CLKP	AU12	VSS	AV18 (66AK2H14 only)	XFIRXP0
AT10	HYP0CLKN	AU13	RSV169		
AT11	VSS	AU14	RSV170		

Copyright © 2012–2017, Texas Instruments Incorporated

Table 4-5. Terminal Functions — By Ball Number (continued)

BALL NUMBER	SIGNAL NAME	BALL NUMBER	SIGNAL NAME	BALL NUMBER	SIGNAL NAME
AV18 (66AK2H12/06 only)	RSV061	AV38	VSS	AW20 (66AK2H14 only)	XFIRXN1
		AV39	VSS		
AV19 (66AK2H14 only)	XFIRXN0	AW1	(nopin)	AW20 (66AK2H12/06 only)	RSV064
		AW2	VSS		
AV19 (66AK2H12/06 only)	RSV060	AW3	VSS	AW21	VSS
		AW4	HYP1CLKP	AW22	RIORXN2
AV20	VSS	AW5	HYP1CLKN	AW23	RIORXP2
AV21	RIORXN3	AW6	VSS	AW24	VSS
AV22	RIORXP3	AW7	HYP0RXN3	AW25	SGMII3RXN
AV23	VSS	AW8	HYP0RXP3	AW26	SGMII3RXP
AV24	RIORXN0	AW9	VSS	AW27	VSS
AV25	RIORXP0	AW10	HYP0RXN0	AW28	SGMII0RXN
AV26	VSS	AW11	HYP0RXP0	AW29	SGMII0RXP
AV27	SGMII1RXN	AW12	VSS	AW30	VSS
AV28	SGMII1RXP	AW13	RSV167	AW31	PCIECLKP
AV29	VSS	AW14	RSV168	AW32	PCIECLKN
AV30	PCIERXN1	AW15	VSS	AW33	VSS
AV31	PCIERXP1	AW16	RSV161	AW34	SRIOSGMIICLKP
AV32	VSS	AW17	RSV162	AW35	SRIOSGMIICLKN
AV33	PASSCLKP	AW18	VSS	AW36	RSV81
AV34	PASSCLKN	AW19 (66AK2H14 only)	XFIRXP1	AW37	VSS
AV35	VSS			AW38	VSS
AV36	RSV79	AW19 (66AK2H12/06 only)	RSV065	AW39	(nopin)
AV37	RSV77				

4.4 Pullup/Pulldown Resistors

Proper board design should ensure that input pins to the device always be at a valid logic level and not floating. This may be achieved via pullup/pulldown resistors. The device features internal pullup (IPU) and internal pulldown (IPD) resistors on most pins to eliminate the need, unless otherwise noted, for external pullup/pulldown resistors.

An external pullup/pulldown resistor needs to be used in the following situations:

- **Device Configuration Pins:** If the pin is both routed out and not driven (in Hi-Z state), an external pullup/pulldown resistor must be used, even if the IPU/IPD matches the desired value/state.
- **Other Input Pins:** If the IPU/IPD does not match the desired value/state, use an external pullup/pulldown resistor to pull the signal to the opposite rail.

For the device configuration pins (listed in Table 10-29), if they are both routed out and are not driven (in Hi-Z state), it is strongly recommended that an external pullup/pulldown resistor be implemented. Although, internal pullup/pulldown resistors exist on these pins and they may match the desired configuration value, providing external connectivity can help ensure that valid logic levels are latched on these device configuration pins. In addition, applying external pullup/pulldown resistors on the device configuration pins adds convenience to the user in debugging and flexibility in switching operating modes.

Tips for choosing an external pullup/pulldown resistor:

- Consider the total amount of current that may pass through the pullup or pulldown resistor. Be sure to include the leakage currents of all the devices connected to the net, as well as any internal pullup or pulldown resistors.
- Decide a target value for the net. For a pulldown resistor, this should be below the lowest V_{IL} level of all inputs connected to the net. For a pullup resistor, this should be above the highest V_{IH} level of all inputs on the net. A reasonable choice would be to target the V_{OL} or V_{OH} levels for the logic family of the limiting device; which, by definition, have margin to the V_{IL} and V_{IH} levels.

Copyright © 2012–2017, Texas Instruments Incorporated

- Select a pullup/pulldown resistor with the largest possible value that still ensures that the net will reach the target pulled value when maximum current from all devices on the net is flowing through the resistor. The current to be considered includes leakage current plus, any other internal and external pullup/pulldown resistors on the net.
- For bidirectional nets, there is an additional consideration that sets a lower limit on the resistance value of the external resistor. Verify that the resistance is small enough that the weakest output buffer can drive the net to the opposite logic level (including margin).
- Remember to include tolerances when selecting the resistor value.
- For pullup resistors, also remember to include tolerances on the DVDD rail.

For most systems:

- A 1-kΩ resistor can be used to oppose the IPU/IPD while meeting the above criteria. Users should confirm this resistor value is correct for their specific application.
- A 20-kΩ resistor can be used to compliment the IPU/IPD on the device configuration pins while meeting the above criteria. Users should confirm this resistor value is correct for their specific application.

For more detailed information on input current (I_I), and the low-level and high-level input voltages (V_{IL} and V_{IH}) for the 66AK2Hxx device, see Section 5.5. To determine which pins on the device include internal pullup/pulldown resistors, see Table 4-3.

Copyright © 2012–2017, Texas Instruments Incorporated

5 Specifications

5.1 Absolute Maximum Ratings

over operating case temperature range (unless otherwise noted)(1)

Supply voltage(2):	CVDD	–0.3 V to 1.3 V
	CVDD1	–0.3 V to 1.3 V
	CVDDT1	–0.3 V to 1.3 V
	DVDD15	–0.3 V to 1.98 V
	DVDD18	–0.3 V to 2.45 V
	DVDD33	–0.3V to 3.63 V
	DDR3VREFSSTL	0.49 × DVDD15 to 0.51 × DVDD15
	VDDAHV	–0.3 V to 1.98 V
	VDDALV	–0.3 V to 0.935 V
	VDDUSB	–0.3V to 0.935 V
	AVDDA1, AVDDA2, AVDDA3,AVDDA4, AVDDA5	–0.3 V to 1.98 V
	AVDDA6, AVDDA7, AVDDA8, AVDDA9, AVDDA10, AVDDA11, AVDDA12, AVDDA13, AVDDA14, AVDDA15	–0.3 V to 1.98 V
	VSS Ground	0 V
Input voltage (V_I):(3)	LVCMOS (1.8 V)	–0.3 V to DVDD18+0.3 V
	DDR3A, DDR3B	–0.3 V to 1.98 V
	I^2C	–0.3 V to 2.45 V
	LVDS	–0.3 V to DVDD18+0.3 V
	LJCB	–0.3 V to 1.3 V
	SerDes	–0.3 V to VDDAHV1+0.3 V
Output voltage (V_O):(3)	LVCMOS (1.8 V)	–0.3 V to DVDD18+0.3 V
	DDR3A, DDR3B	–0.3 V to 1.98 V
	I^2C	–0.3 V to 2.45 V
	SerDes	–0.3 V to VDDAHV+0.3 V
Operating case temperature, T_C:	Commercial	0°C to 85°C
	Extended	–40°C to 100°C
Overshoot/undershoot (4)	LVCMOS (1.8 V)	20% overshoot/undershoot for 20% of signal duty cycle
	DDR3A, DDR3B	
	I^2C	
Storage temperature, T_{stg}:		–65°C to 150°C

(1) Stresses beyond those listed under *Absolute Maximum Ratings* may cause permanent damage to the device. These are stress ratings only, and functional operation of the device at these or any other conditions beyond those indicated under *Recommended Operating Conditions* is not implied. Exposure to absolute-maximum-rated conditions for extended periods may affect device reliability.
(2) All voltage values are with respect to V_{SS}.
(3) For USB High-Speed, Full-Speed, and Low -Speed modes, USB I/Os adhere to Universal Serial Bus, revision 2.0 standard. For USB Super-Speed mode, USB I/Os adhere to Universal Serial Bus, revision 3.1 specification, revision 1.0 standard.
(4) Overshoot/Undershoot percentage relative to I/O operating values - for example the maximum overshoot value for 1.8 V LVCMOS signals is DVDD18 + 0.20 × DVDD18 and maximum undershoot value would be V_{SS} - 0.20 × DVDD18

5.2 ESD Ratings

			VALUE	UNIT
V_{ESD}	Electrostatic discharge (ESD)	Human body model (HBM), per ANSI/ESDA/JEDEC JS-001(1)	±1000	V
		Charged device model (CDM), per JESD22-C101(2)	±250	

(1) JEDEC document JEP155 states that 500-V HBM allows safe manufacturing with a standard ESD control process.
(2) JEDEC document JEP157 states that 250-V CDM allows safe manufacturing with a standard ESD control process.

Copyright © 2012–2017, Texas Instruments Incorporated

5.3 Recommended Operating Conditions

(1)(2)

			MIN	NOM	MAX	UNIT
CVDD	SR DSP core supply	Initial (3)	0.95	1.0	1.05	V
		1000-MHz device	SRVnom*0.95 (4)	SRVnom	SRVnom*1.05	V
		1200-MHz device	SRVnom*0.95 (4)	SRVnom	SRVnom*1.05	V
CVDD1	DSP core supply		0.902	0.95	0.997	V
CVDDT1	Cortex-A15 processor core supply		0.902	0.95	0.997	V
DVDD18	1.8-V supply I/O voltage		1.71	1.8	1.89	V
DVDD15	DDR3 I/O voltage	DDR3	1.425	1.5	1.575	V
		DDR3L at 1.5 V	1.425	1.5	1.575	
		DDR3L at 1.35 V	1.283	1.35	1.45	
DDR3VREFSSTL	DDR3A, DDR3B reference voltage		0.49 × DVDD15	0.5 × DVDD15	0.51 × DVDD15	V
VDDAHV	SerDes regulator supply		1.71	1.8	1.89	V
AVDDx (5)	PLL analog, DDR DLL supply		1.71	1.8	1.89	V
VDDALH	SerDes termination supply		0.807	0.85	0.892	V
DVDD33	USB		3.135	3.3	3.465	V
VDDUSB	USB		0.807	0.85	0.892	V
V_{SS}	Ground		0	0	0	V
V_{IH} (6)	High-level input voltage	LVCMOS (1.8 V)	0.65 × DVDD18			V
		I^2C	0.7 × DVDD18			
		DDR3A, DDR3B EMIF	VREFSSTL + 0.1			
V_{IL} (6)	Low-level input voltage	LVCMOS (1.8 V)			0.35 × DVDD18	V
		DDR3A, DDR3B EMIF	-0.3		VREFSSTL - 0.1	
		I^2C			0.3 × DVDD18	
T_C	Operating case temperature	Commercial	0		85	°C
		Extended	–40		100	

(1) All differential clock inputs comply with the LVDS Electrical Specification, IEEE 1596.3-1996 and all SerDes I/Os comply with the XAUI Electrical Specification, IEEE 802.3ae-2002.
(2) All SerDes I/Os comply with the XAUI Electrical Specification, IEEE 802.3ae-2002.
(3) Users are required to program their board CVDD supply initial value to 1.0 V on the device. The initial CVDD voltage at power-on will be 1.0 V nominal and it must transition to VID set value, immediately after being presented on the VCNTL pins. This is required to maintain full power functionality and reliability targets ensured by TI.
(4) SRVnom refers to the unique SmartReflex core supply voltage that has a potential range of 0.8 V and 1.1 V which preset from the factory for each individual device. Your device may never be programmed to operate at the upper range but has been designed accordingly should it be determined to be acceptable or necessary. Power supplies intended to support the variable SRV function shall be capable of providing a 0.8 V-1.1 V dynamic range using a 4- or 6-bit binary input value which as provided by the DSP SmartReflex output.
(5) Where x = 1,2,3,4... to indicate all supplies of the same kind.
(6) For USB High-Speed, Full-Speed, and Low -Speed modes, USB I/Os adhere to Universal Serial Bus, revision 2.0 standard. For USB Super-Speed mode, USB I/Os adhere to Universal Serial Bus, revision 3.1 specification, revision 1.0 standard.

5.4 Power Consumption Summary

For information on the device power consumption, see the power estimation spreadsheet provided in *66AK2H14 Power Consumption Model*, *66AK2H12 Power Consumption Model*, and *66AK2H06 Power Consumption Model*.

Copyright © 2012–2017, Texas Instruments Incorporated

5.5 Electrical Characteristics

over recommended ranges of supply voltage and operating case temperature (unless otherwise noted)

PARAMETER			TEST CONDITIONS (1)	MIN	TYP	MAX	UNIT
V_{OH} (2)	High-level output voltage	LVCMOS (1.8 V)	$I_O = I_{OH}$	DVDD18 – 0.45			V
		DDR3A, DDR3B		DVDD15 – 0.4			
		I^2C (3)					
V_{OL} (2)	Low-level output voltage	LVCMOS (1.8 V)	$I_O = I_{OL}$			0.45	V
		DDR3A, DDR3B				0.4	
		I^2C	I_O = 3 mA, pulled up to 1.8 V			0.4	
I_I (4)	Input current [DC]	LVCMOS (1.8 V)	No IPD/IPU	–10		10	µA
			Internal pullup	50	100	170	
			Internal pulldown	–170	–100	–50	
		I^2C	0.1 × DVDD18 V < V_I < 0.9 × DVDD18 V	–10		10	
I_{OH}	High-level output current [DC]	LVCMOS (1.8 V)				–6	mA
		DDR3A, DDR3B				–8	
		I^2C (5)					
I_{OL}	Low-level output current [DC]	LVCMOS (1.8 V)				6	mA
		DDR3A, DDR3B				8	
		I^2C				3	
I_{OZ} (6)	Off-state output current [DC]	LVCMOS (1.8 V)		–10		10	µA
		DDR3A, DDR3B		–10		10	
		I^2C		–10		10	

(1) For test conditions shown as MIN, MAX, or TYP, use the appropriate value specified in the recommended operating conditions table.
(2) For USB High-Speed, Full-Speed, and Low-Speed modes, USB I/Os adhere to Universal Serial Bus, revision 2.0 standard. For USB Super-Speed mode, USB I/Os adhere to Universal Serial Bus, revision 3.1 specification, revision 1.0 standard.
(3) I^2C uses open collector I/Os and does not have a V_{OH} minimum.
(4) I_I applies to input-only pins and bidirectional pins. For input-only pins, I_I indicates the input leakage current. For bidirectional pins, I_I includes input leakage current and off-state (Hi-Z) output leakage current.
(5) I^2C uses open collector I/Os and does not have a I_{OH} maximum.
(6) I_{OZ} applies to output-only pins, indicating off-state (Hi-Z) output leakage current.

5.6 Thermal Resistance Characteristics for PBGA Package [AAW]

NO.			°C/W (1) (2)
1	$R\Theta_{JC}$	Junction-to-case	0.11
2	$R\Theta_{JB}$	Junction-to-board	1.65

(1) These values are based on a JEDEC-defined 2S2P system (with the exception of the Theta JC [RΘJC] value, which is based on a JEDEC-defined 1S0P system) and will change based on environment as well as application. For more information, see these EIA/JEDEC standards:
- JESD51-2, Integrated Circuits Thermal Test Method Environmental Conditions - Natural Convection (Still Air)
- JESD51-3, Low Effective Thermal Conductivity Test Board for Leaded Surface Mount Packages
- JESD51-7, High Effective Thermal Conductivity Test Board for Leaded Surface Mount Packages
- JESD51-9, Test Boards for Area Array Surface Mount Package Thermal Measurements

(2) °C/W = degrees Celsius per watt.

Copyright © 2012–2017, Texas Instruments Incorporated

5.7 Power Supply to Peripheral I/O Mapping

over recommended ranges of supply voltage and operating case temperature (unless otherwise noted)(1)(2)

POWER SUPPLY		I/O BUFFER TYPE	ASSOCIATED PERIPHERAL
CVDD	Supply core AVS voltage	LJCB	SYSCLK(P|N) PLL input buffer
			ALTCORECLK(P|N) PLL input buffer
			SRIOSGMIICLK(P|N) SerDes PLL input buffer
			DDR3ACLK(P|N) PLL input buffer
			DDR3BCLK(P|N) PLL input buffer
			PASSCLK(P|N) PLL input buffer
			ARMCLK(P|N) PLL input buffer
VDDALV		LJCB	SERDES low voltage
VDDAHV	SerDes I/O voltage	SerDes/CML	PCIECLK(P|N) SerDes Clock Reference
			HYP0CLK(P|N) SerDes Clock Reference
			HYP1CLK(P|N) SerDes Clock Reference
			USBCLK(P|M) SerDes Clock Reference
DVDD15	1.35-V / 1.5-V supply I/O voltage	DDR3A, DDR3B (1.35 V / 1.5 V)	All DDR3A, DDR3B memory controller peripheral I/O buffer
DVDD18	1.8-V supply I/O voltage	LVCMOS (1.8 V)	All GPIO peripheral I/O buffer
			All JTAG and EMU peripheral I/O buffer
			All TIMER peripheral I/O buffer
			All SPI peripheral I/O buffer
			All RESETs, NMI, control peripheral I/O buffer
			All SmartReflex peripheral I/O buffer
			All Hyperlink sideband peripheral I/O buffer
			All MDIO peripheral I/O buffer
			All UART peripheral I/O buffer
		Open-drain (1.8 V)	All I^2C peripheral I/O buffer

(1) This table does not try to describe all functions of all power supply terminals but only those whose purpose it is to power peripheral I/O buffers and clock input buffers.
(2) See *Hardware Design Guide for KeyStone II Devices* for more information about individual peripheral I/O.

6 C66x CorePac

The C66x CorePac consists of several components:

- Level-one and level-two memories (L1P, L1D, L2)
- Data Trace Formatter (DTF)
- Embedded Trace Buffer (ETB)
- Interrupt controller
- Power-down controller
- External memory controller
- Extended memory controller
- A dedicated local power/sleep controller (LPSC)

The C66x CorePac also provides support for big and little endianness, memory protection, and bandwidth management (for resources local to the CorePac). Figure 6-1 shows a block diagram of the C66x CorePac.

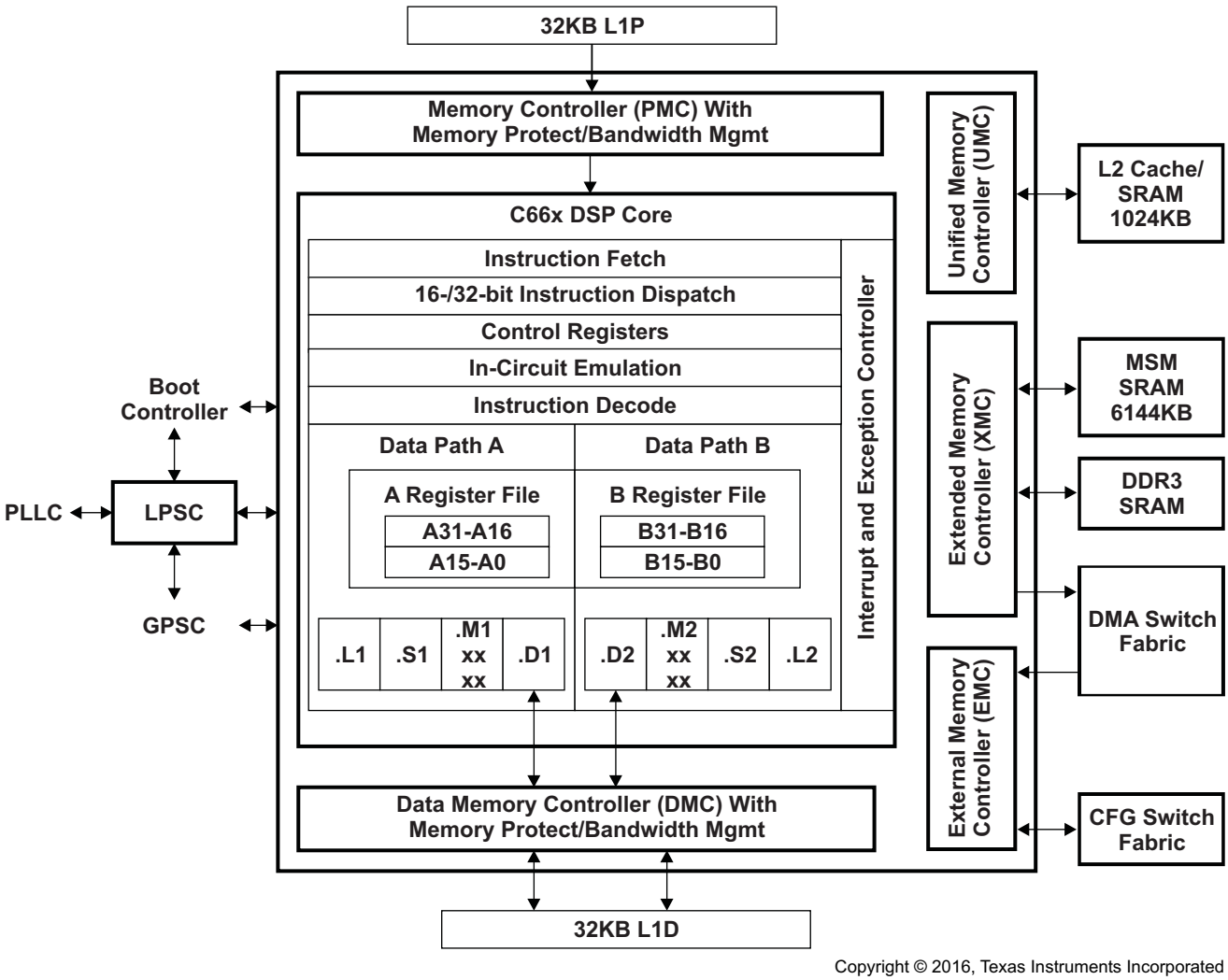

Copyright © 2016, Texas Instruments Incorporated

Figure 6-1. C66x CorePac Block Diagram

For more detailed information on the C66x CorePac in the 66AK2Hxx device, see the *TMS320C66x DSP CorePac User's Guide*.

Copyright © 2012–2017, Texas Instruments Incorporated

6.1 C66x DSP CorePac

The C66x DSP CorePac extends the performance of the C64x+ and C674x CPUs through enhancements and new features. Many of the new features target increased performance for vector processing. The C64x+ and C674x DSPs support 2-way SIMD operations for 16-bit data and 4-way SIMD operations for 8-bit data. On the C66x DSP, the vector processing capability is improved by extending the width of the SIMD instructions. C66x DSPs can execute instructions that operate on 128-bit vectors. The C66x CPU also supports SIMD for floating-point operations. Improved vector processing capability (each instruction can process multiple data in parallel) combined with the natural instruction level parallelism of C6000™ architecture (for example, execution of up to 8 instructions per cycle) results in a very high level of parallelism that can be exploited by DSP programmers through the use of TI's optimized C/C++ compiler.

For more details on the C66x CPU and its enhancements over the C64x+ and C674x architectures, see the following documents:

- *TMS320C66x DSP CPU and Instruction Set Reference Guide*
- *TMS320C66x DSP Cache User's Guide*
- *TMS320C66x DSP CorePac User's Guide*

6.2 Memory Architecture

Each C66x CorePac of the 66AK2Hxx device contains a 1024KB level-2 memory (L2), a 32KB level-1 program memory (L1P), and a 32KB level-1 data memory (L1D). The device also contains a 6144KB multicore shared memory (MSM). All memory on the 66AK2Hxx has a unique location in the memory map (see Section 8).

After device reset, L1P and L1D cache are configured as all cache, by default. The L1P and L1D cache can be reconfigured via software through the L1PMODE field of the L1P Configuration Register (L1PMODE) and the L1DMODE field of the L1D Configuration Register (L1DCFG) of the C66x CorePac. L1D is a two-way set-associative cache, while L1P is a direct-mapped cache.

The on-chip bootloader changes the reset configuration for L1P and L1D. For more information, see the *KeyStone Architecture DSP Bootloader User's Guide*.

For more information on the operation L1 and L2 caches, see the *TMS320C66x DSP Cache User's Guide*.

6.2.1 L1P Memory

The L1P memory configuration for the 66AK2Hxx device is as follows:

- Region 0 size is 0KB (disabled)
- Region 1 size is 32KB with no wait states

Figure 6-2 shows the available SRAM/cache configurations for L1P.

Copyright © 2012–2017, Texas Instruments Incorporated

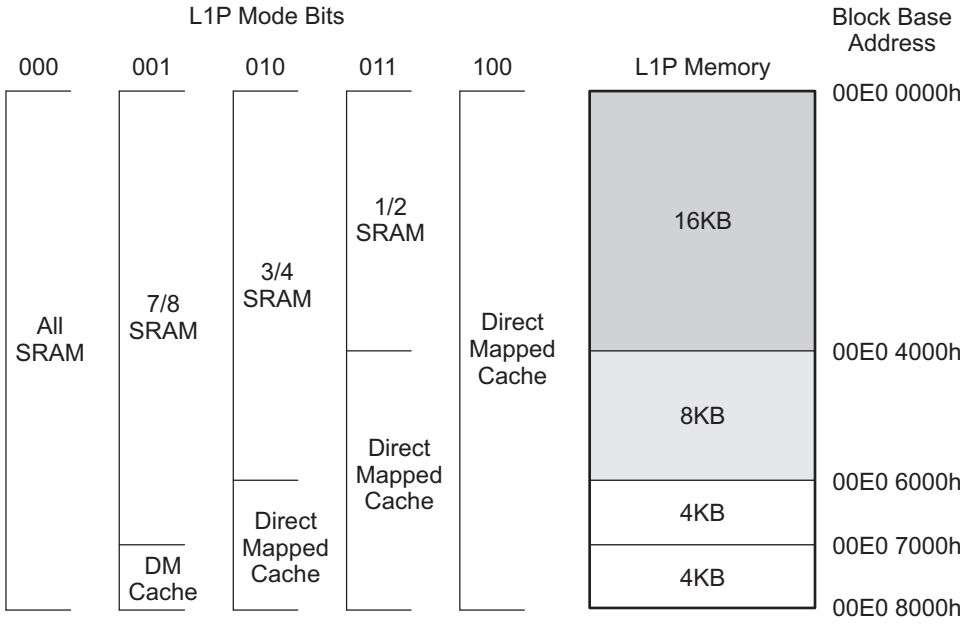

Figure 6-2. L1P Memory Configurations

6.2.2 L1D Memory

The L1D memory configuration for the 66AK2Hxx device is as follows:

- Region 0 size is 0KB (disabled)
- Region 1 size is 32KB with no wait states

Figure 6-3 shows the available SRAM/cache configurations for L1D.

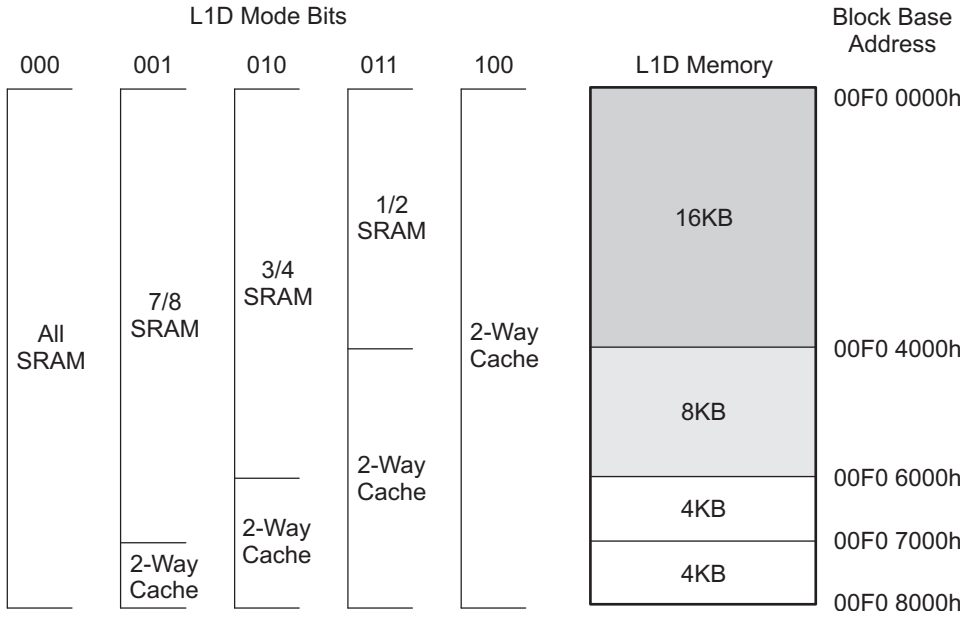

Figure 6-3. L1D Memory Configurations

6.2.3 L2 Memory

The L2 memory configuration for the 66AK2Hxx device is as follows:

- Total memory size is 8192KB

Copyright © 2012–2017, Texas Instruments Incorporated

- Each CorePac contains 1024KB of memory
- Local starting address for each CorePac is 0080 0000h

L2 memory can be configured as all SRAM, all 4-way set-associative cache, or a mix of the two. The amount of L2 memory that is configured as cache is controlled through the L2MODE field of the L2 Configuration Register (L2CFG) of the C66x CorePac. Figure 6-4 shows the available SRAM/cache configurations for L2. By default, L2 is configured as all SRAM after device reset.

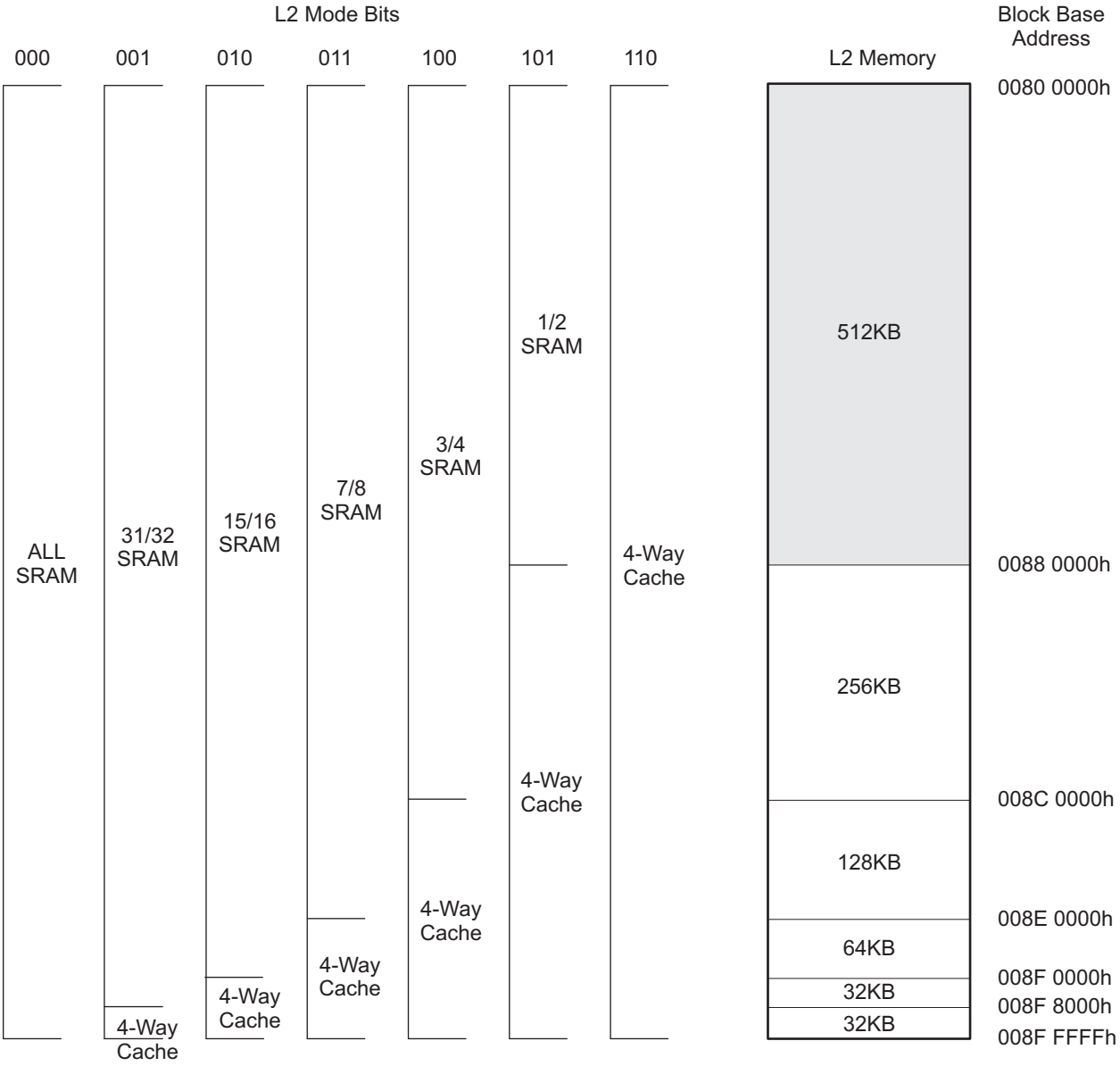

Figure 6-4. L2 Memory Configurations

Global addresses that are accessible to all masters in the system are in all memory local to the processors. In addition, local memory can be accessed directly by the associated processor through aliased addresses, where the eight MSBs are masked to 0. The aliasing is handled within the CorePac and allows for common code to be run unmodified on multiple cores. For example, address location 0x10800000 is the global base address for CorePac0's L2 memory. CorePac0 can access this location by either using 0x10800000 or 0x00800000. Any other master on the device must use 0x10800000 only. Conversely, 0x00800000 can by used by any of the C66x CorePacs as their own L2 base addresses. For

Copyright © 2012–2017, Texas Instruments Incorporated

CorePac0, as mentioned, this is equivalent to 0x10800000, for CorePac1 this is equivalent to 0x11800000, and for CorePac2 this is equivalent to 0x12800000. Local addresses should be used only for shared code or data, allowing a single image to be included in memory. Any code/data targeted to a specific core, or a memory region allocated during run time by a particular CorePac should always use the global address only.

6.2.4 Multicore Shared Memory SRAM

The MSM SRAM configuration for the 66AK2Hxx device is as follows:

- Memory size of 6144KB
- Can be configured as shared L2 or shared L3 memory
- Allows extension of external addresses from 2GB up to 8GB
- Has built-in memory protection features

The MSM SRAM is always configured as all SRAM. When configured as a shared L2, its contents can be cached in L1P and L1D. When configured in shared L3 mode, it's contents can be cached in L2 also. For more details on external memory address extension and memory protection features, see the *KeyStone Architecture Multicore Shared Memory Controller (MSMC) User's Guide*.

6.2.5 L3 Memory

The L3 ROM on the device is 128KB. The ROM contains software used to boot the device. There is no requirement to block accesses from this portion to the ROM.

6.3 Memory Protection

Memory protection allows an operating system to define who or what is authorized to access L1D, L1P, and L2 memory. To accomplish this, the L1D, L1P, and L2 memories are divided into pages. There are 16 pages of L1P (2KB each), 16 pages of L1D (2KB each), and 32 pages of L2 (32KB each). The L1D, L1P, and L2 memory controllers in the C66x CorePac are equipped with a set of registers that specify the permissions for each memory page.

Each page may be assigned with fully orthogonal user and supervisor read, write, and execute permissions. In addition, a page may be marked as either (or both) locally accessible or globally accessible. A local access is a direct DSP access to L1D, L1P, and L2, while a global access is initiated by a DMA (either IDMA or the EDMA3) or by other system masters. Note that EDMA or IDMA transfers programmed by the DSP count as global accesses. On a secure device, pages can be restricted to secure access only (default) or opened up for public, nonsecure access.

The DSP and each of the system masters on the device are all assigned a privilege ID. It is possible to specify only whether memory pages are locally or globally accessible.

The AIDx and LOCAL bits of the memory protection page attribute registers specify the memory page protection scheme, see Table 6-1.

Table 6-1. Available Memory Page Protection Schemes

AIDx BIT(1)	LOCAL BIT	DESCRIPTION
0	0	No access to memory page is permitted.
0	1	Only direct access by DSP is permitted.
1	0	Only accesses by system masters and IDMA are permitted (includes EDMA and IDMA accesses initiated by the DSP).
1	1	All accesses permitted.

(1) x = 0, 1, 2, 3, 4, 5

Copyright © 2012–2017, Texas Instruments Incorporated

Faults are handled by software in an interrupt (or an exception, programmable within the CorePac interrupt controller) service routine. A DSP or DMA access to a page without the proper permissions will:

- Block the access — reads return 0, writes are ignored
- Capture the initiator in a status register — ID, address, and access type are stored
- Signal the event to the DSP interrupt controller

The software is responsible for taking corrective action to respond to the event and resetting the error status in the memory controller. For more information on memory protection for L1D, L1P, and L2, see the *TMS320C66x DSP CorePac User's Guide*.

6.4 Bandwidth Management

When multiple requestors contend for a single C66x CorePac resource, the conflict is resolved by granting access to the highest priority requestor. The following four resources are managed by the bandwidth management control hardware:

- Level 1 Program (L1P) SRAM/Cache
- Level 1 Data (L1D) SRAM/Cache
- Level 2 (L2) SRAM/Cache
- Memory-mapped registers configuration bus

The priority level for operations initiated within the C66x CorePac are declared through registers in the CorePac. These operations are:

- DSP-initiated transfers
- User-programmed cache coherency operations
- IDMA-initiated transfers

The priority level for operations initiated outside the CorePac by system peripherals is declared through the Priority Allocation Register (PRI_ALLOC). System peripherals with no fields in PRI_ALLOC have their own registers to program their priorities.

More information on the bandwidth management features of the CorePac can be found in the *TMS320C66x DSP CorePac User's Guide*.

6.5 Power-Down Control

The C66x CorePac supports the ability to power-down various parts of the CorePac. The power-down controller (PDC) of the CorePac can be used to power down L1P, the cache control hardware, the DSP, and the entire CorePac. These power-down features can be used to design systems for lower overall system power requirements.

NOTE

The 66AK2Hxx does not support power-down modes for the L2 memory at this time.

More information on the power-down features of the C66x CorePac can be found in the *TMS320C66x DSP CorePac User's Guide*.

Copyright © 2012–2017, Texas Instruments Incorporated

6.6 C66x CorePac Revision

The version and revision of the C66x CorePac can be read from the CorePac Revision ID Register (MM_REVID) at address 0181 2000h. The MM_REVID register is shown in Figure 6-5 and described in Table 6-2. The C66x CorePac revision is dependent on the silicon revision being used.

Figure 6-5. CorePac Revision ID Register (MM_REVID)

31	30	29	28	27	26	25	24	23	22	21	20	19	18	17	16	15	14	13	12	11	10	9	8	7	6	5	4	3	2	1	0
VERSION																REVISION															
R-n																R-n															

Legend: R = Read only; R/W = Read/Write; -*n* = value after reset

Table 6-2. CorePac Revision ID Register (MM_REVID) Field Descriptions

Bit	Name	Value	Description
31-16	VERSION	0009h	Version of the C66x CorePac implemented on the device.
15-0	REVISION	xxxxh	Revision of the C66x CorePac version implemented on this device. 0000h = silicon revision 1.0 0002h = silicon revision 1.1 0003h = silicon revisions 2.0, 3.0, and 3.1

6.7 C66x CorePac Register Descriptions

See the *TMS320C66x DSP CorePac User's Guide* for register offsets and definitions.

Copyright © 2012–2017, Texas Instruments Incorporated

7 ARM CorePac

The ARM CorePac is added in the 66AK2Hxx to enable the ability for layer 2 and layer 3 processing on-chip. Operations such as traffic control, local O&M, NBAP/FP termination, and SCTP processing can all be performed with the Cortex-A15 processor core.

The ARM CorePac of the 66AK2Hxx integrates one or more Cortex-A15 processor clusters with additional logic for bus protocol conversion, emulation, interrupt handling, and debug related enhancements. The Cortex-A15 processor is an ARMv7A-compatible, multi-issue out-of-order superscalar execution engine with integrated L1 caches. The implementation also supports advanced SIMDv2 (NEON technology) and VFPv4 (vector floating point) architecture extensions, security, virtualization, LPAE (large physical address extension), and multiprocessing extensions. The ARM CorePac includes a 4MB L2 cache and support for AMBA4 AXI and AXI coherence extension (ACE) protocols. An interrupt controller is included in the ARM CorePac to handle host interrupt requests in the system. For more information, see the *KeyStone II Architecture ARM CorePac User's Guide*.

The ARM CorePac has three functional clock domains, including a high-frequency clock domain used by the Cortex-A15. The high-frequency domain is isolated from the rest of the device by asynchronous bridges.

Figure 7-1 and Figure 7-2 show the ARM CorePac.

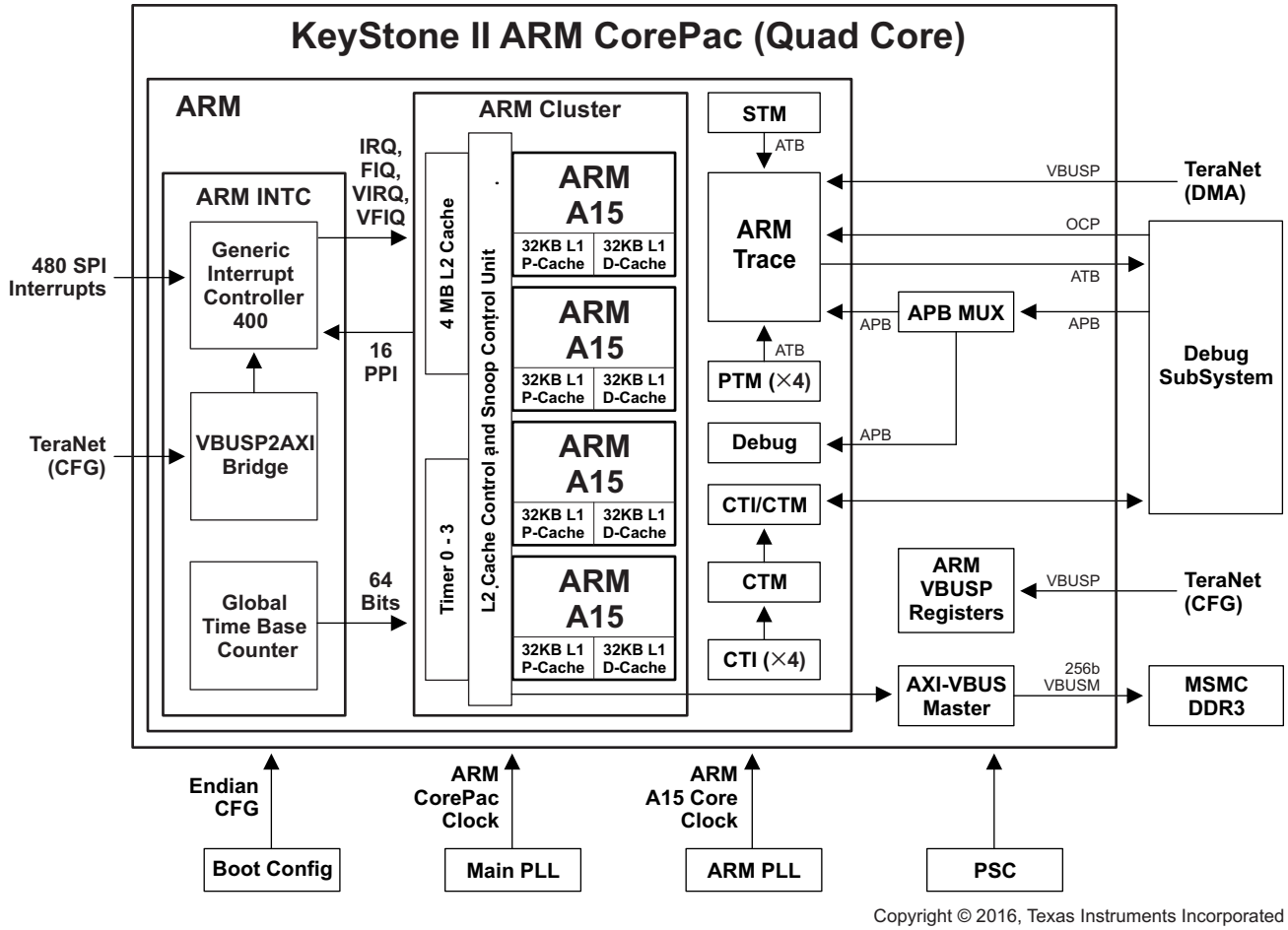

Figure 7-1. 66AK2H12 ARM CorePac Block Diagram

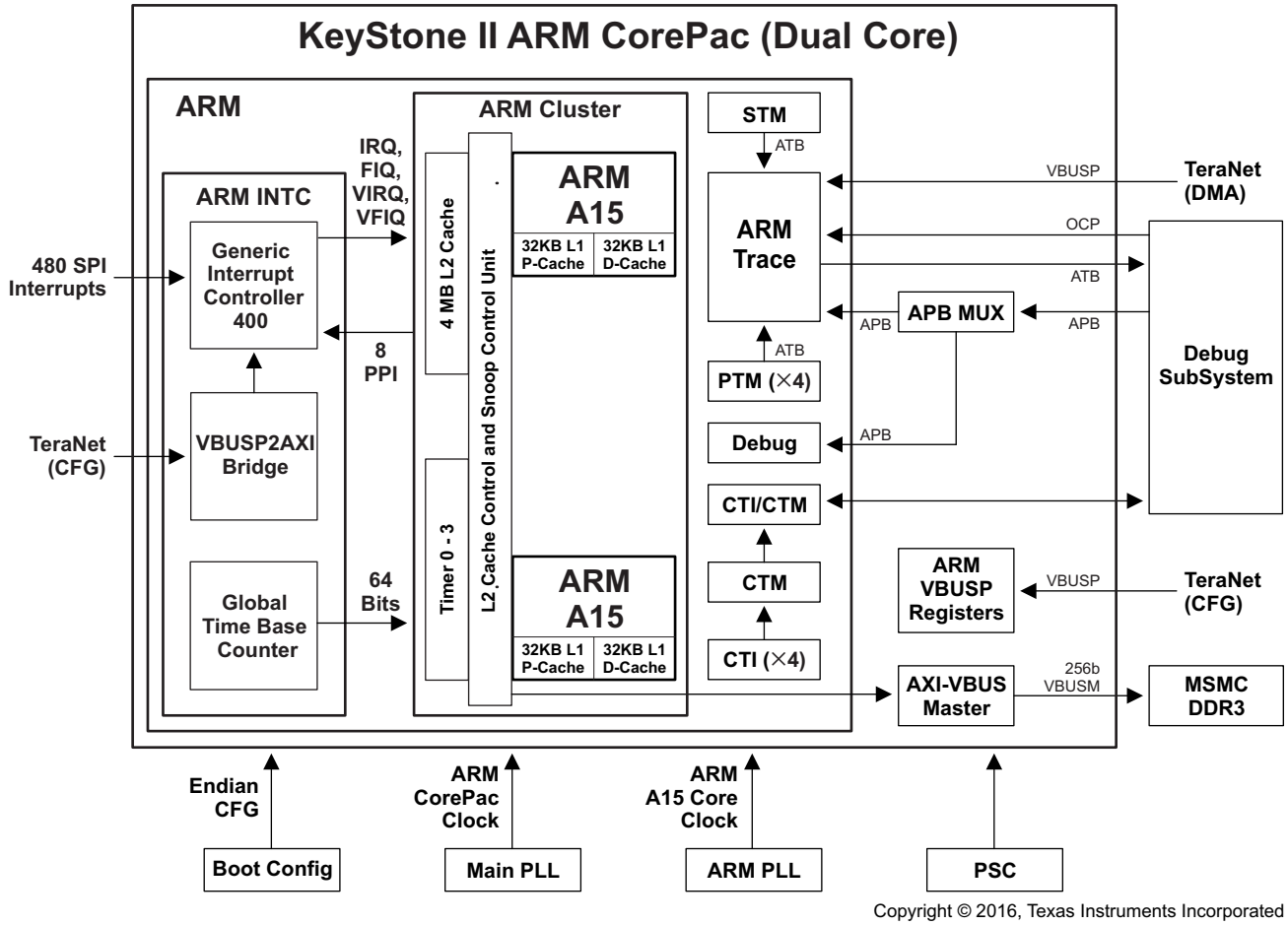

Figure 7-2. 66AK2H06 ARM CorePac Block Diagram

Copyright © 2012–2017, Texas Instruments Incorporated

7.1 Features

The key features of the Quad Core ARM CorePac are as follows:

- One or more Cortex-A15 processors, each containing:
  - Cortex-A15 processor revision R2P4.
  - ARM architecture version 7 ISA.
  - Multi-issue, out-of-order, superscalar pipeline.
  - L1 and L2 instruction and data cache of 32KB, 2-way, 16 word line with 128-bit interface.
  - Integrated L2 cache of 4MB, 16-way, 16-word line, 128-bit interface to L1 along with ECC/parity.
  - Includes the NEON™ media coprocessor (NEON), which implements the advanced SIMDv2 media processing architecture and the VFPv4 Vector Floating Point architecture.
  - The external interface uses the AXI protocol configured to 128-bit data width.
  - Includes the System Trace Macrocell (STM) support for noninvasive debugging.
  - Implements the ARMv7 debug with watchpoint and breakpoint registers and 32-bit advanced peripheral bus (APB) slave interface to CoreSight™ debug systems.
- Interrupt controller
  - Supports up to 480 interrupt requests
- Emulation/debug
  - Compatible with CoreSight architecture

7.2 System Integration

The ARM CorePac integrates the following group of submodules.

- **Cortex-A15 Processors:** Provides a high processing capability, including the NEON technology for mobile multimedia acceleration. The Cortex-A15 communicates with the rest of the ARM CorePac through an AXI bus with an AXI2VBUSM bridge and receives interrupts from the ARM CorePac interrupt controller (ARM INTC).
- **Interrupt Controller:** Handles interrupts from modules outside of the ARM CorePac (for details, see Section 7.3.3).
- **Clock Divider:** Provides the required divided clocks to the internal modules of the ARM CorePac and has a clock input from the ARM PLL and the Main PLL
- **In-Circuit Emulator:** Fully compatible with CoreSight architecture and enables debugging capabilities.

7.3 ARM Cortex-A15 Processor

7.3.1 Overview

The ARM Cortex-A15 processor incorporates the technologies available in the ARM7™ architecture. These technologies include NEON for media and signal processing and Jazelle® RCT for acceleration of real-time compilers, Thumb®-2 technology for code density, and the VFPv4 floating point architecture. For details, see the ARM Cortex-A15 Processor Technical Reference Manual.

7.3.2 Features

Table 7-1 shows the features supported by the Cortex-A15 processor core.

Table 7-1. Cortex-A15 Processor Core Supported Features

FEATURES	DESCRIPTION
ARM version 7-A ISA	Standard Cortex-A15 processor instruction set + Thumb2, ThumbEE, JazelleX Java accelerator, and media extensions
	Backward compatible with previous ARM ISA versions
Cortex-A15 processor version	R2P4
Integer core	Main core for processing integer instructions

Copyright © 2012–2017, Texas Instruments Incorporated

Table 7-1. Cortex-A15 Processor Core Supported Features (continued)

FEATURES	DESCRIPTION
NEON core	Gives greatly enhanced throughput for media workloads and VFP-Lite support
Architecture Extensions	Security, virtualization and LPAE (40-bit physical address) extensions
L1 Lcache and Dcache	32KB, 2-way, 16 word line, 128 bit interface
L2 cache	4096KB, 16-way, 16 word line, 128 bit interface to L1, ECC/Parity is supported shared between cores
	L2 valid bits cleared by software loop or by hardware
Cache Coherency	Support for coherent memory accesses between A15 cores and other noncore master peripherals (Ex: EDMA) in the DDR3A and MSMC SRAM space.
Branch target address cache	Dynamic branch prediction with Branch Target Buffer (BTB) and Global History Buffer (GHB), a return stack, and an indirect predictor
Enhanced memory management unit	Mapping sizes are 4KB, 64KB, 1MB, and 16MB
Buses	128b AXI4 internal bus from Cortex-A15 converted to a 256b VBUSM to interface (through the MSMC) with MSMC SRAM, DDR EMIF, ROM, Interrupt controller and other system peripherals
Noninvasive Debug Support	Processor instruction trace using 4x Program Trace Macrocell (CoreSight PTM), Data trace (print-f style debug) using System Trace Macrocell (CoreSight STM) and Performance Monitoring Units (PMU)
Misc Debug Support	JTAG based debug and Cross triggering
Clocking	Dedicated ARM PLL for flexible clocking scenarios
Voltage	SmartReflex voltage domain for automatic voltage scaling
Power	Support for standby modes and separate core power domains for additional leakage power reduction

7.3.3 ARM Interrupt Controller

The ARM CorePac interrupt controller (AINTC) is responsible for prioritizing all service requests from the system peripherals and the secondary interrupt controller CIC2 and then generating either nIRQ or nFIQ to the Cortex-A15 processor. The type of the interrupt (nIRQ or nFIQ) and the priority of the interrupt inputs are programmable. The AINTC interfaces to the Cortex-A15 processor via the AXI port through an VBUS2AXI bridge and runs at half the processor speed. It has the capability to handle up to 480 requests, which can be steered/prioritized as A15 nFIQ or nIRQ interrupt requests.

The general features of the AINTC are:

- Up to 480 level sensitive shared peripheral interrupts (SPI) inputs
- Individual priority for each interrupt input
- Each interrupt can be steered to nFIQ or nIRQ
- Independent priority sorting for nFIQ and nIRQ
- Secure mask flag

On the chip level, there is a dedicated chip level interrupt controller to serve the ARM interrupt controller. See Section 8.3 for more details.

Figure 7-3 and Figure 7-4 show an overall view of the ARM CorePac Interrupt Controller.

Copyright © 2012–2017, Texas Instruments Incorporated

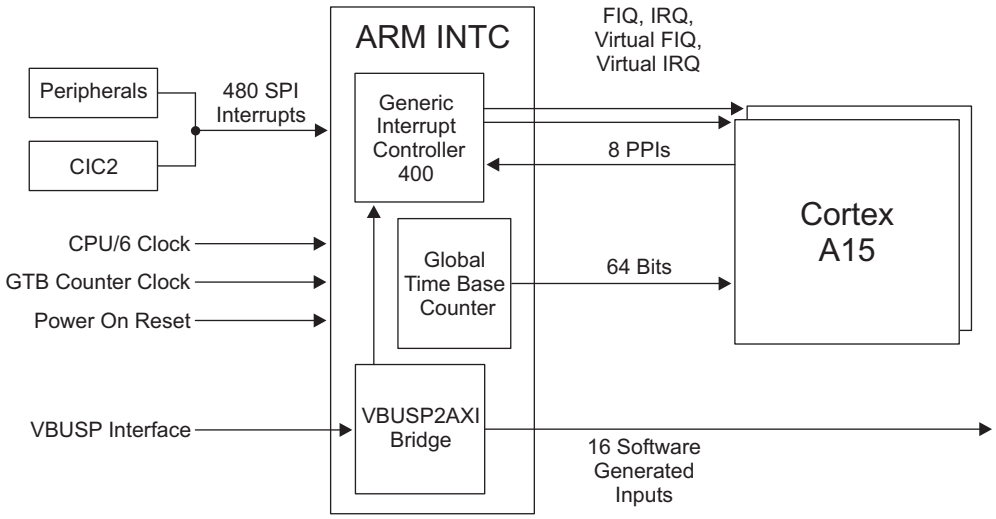

Figure 7-3. ARM Interrupt Controller for Two Cortex-A15 Processor Cores

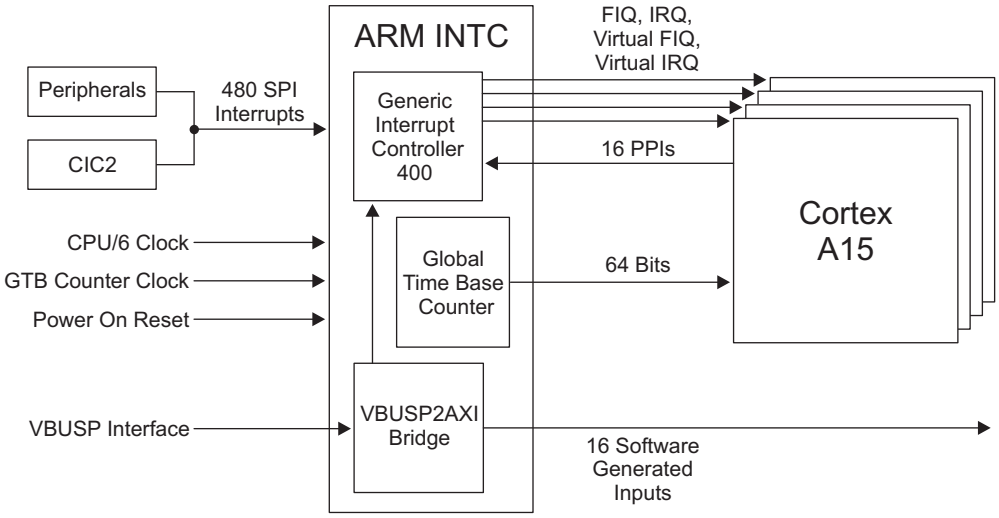

Figure 7-4. ARM Interrupt Controller for Four Cortex-A15 Processor Cores

7.3.4 Endianess

The ARM CorePac can operate in either little-endian or big-endian mode. When the ARM CorePac is in little-endian mode and the rest of the system is in big-endian mode, the bridges in the ARM CorePac are responsible for performing the endian conversion.

7.4 CFG Connection

The ARM CorePac has two slave ports. The 66AK2Hxx masters cannot access the ARM CorePac internal memory space.

1. Slave port 0 (TeraNet 3P_A) is a 32-bit-wide port used for the ARM Trace module.
2. Slave port 1 (TeraNet 3P_B) is a 32-bit-wide port used to access the rest of the system configuration.

7.5 Main TeraNet Connection

One master port comes out of the ARM CorePac. The master port is a 256-bit-wide port for the transactions going to the MSMC and DDR_EMIF data spaces.

Copyright © 2012–2017, Texas Instruments Incorporated

7.6 Clocking and Reset

7.6.1 Clocking

The ARM CorePac includes a dedicated embedded DPLL (ARM PLL). The Cortex-A15 processor core clocks are sourced from this ARM PLL Controller. The Cortex-A15 processor core clock has a maximum frequency of 1.4 GHz. The ARM CorePac subsytem also uses the SYSCLK1 clock source from the main PLL which is locally divided (/1, /3 and /6) and provided to certain submodules inside the ARM CorePac. AINTC sub module runs at a frequency of SYSCLK1/6.

7.6.2 Reset

The ARM CorePac does not support local reset. It is reset whenever the device is under reset. In addition, the interrupt controller (AINTC) can only be reset during $\overline{\text{POR}}$ and $\overline{\text{RESETFULL}}$. AINTC also resets whenever device is under reset.

For the complete programming model, refer to the *KeyStone II Architecture ARM CorePac User's Guide*.

Copyright © 2012–2017, Texas Instruments Incorporated

8 Memory, Interrupts, and EDMA for 66AK2Hxx

8.1 Memory Map Summary for 66AK2Hxx

Table 8-1 shows the memory map address ranges of the device.

Table 8-1. Device Memory Map Summary for 66AK2Hxx

PHYSICAL 40-BIT ADDRESS					
START	END	BYTES	ARM VIEW	DSP VIEW	SOC VIEW
00 0000 0000	00 0003 FFFF	256K	ARM ROM	Reserved	ARM ROM
00 0004 0000	00 007F FFFF	8M-256K	Reserved	Reserved	Reserved
00 0080 0000	00 008F FFFF	1M	Reserved	L2 SRAM	L2 SRAM
00 0090 0000	00 00DF FFFF	5M	Reserved	Reserved	Reserved
00 00E0 0000	00 00E0 7FFF	32K	Reserved	L1P SRAM	L1P SRAM
00 00E0 8000	00 00EF FFFF	1M-32K	Reserved	Reserved	Reserved
00 00F0 0000	00 00F0 7FFF	32K	Reserved	L1D SRAM	L1D SRAM
00 00F0 8000	00 00FF FFFF	1M-32K	Reserved	Reserved	Reserved
00 0100 0000	00 0100 FFFF	64K	ARM AXI2VBUSM Master Registers	C66x CorePac registers	C66x CorePac registers
00 0101 0000	00 010F FFFF	1M-64K	Reserved	C66x CorePac registers	C66x CorePac registers
00 0110 0000	00 0110 FFFF	64K	ARM STM stimulus ports	C66x CorePac registers	C66x CorePac registers
00 0111 0000	00 01BF FFFF	11M-64K	Reserved	C66x CorePac registers	C66x CorePac registers
00 01C0 0000	00 01CF FFFF	1M	Reserved	Reserved	Reserved
00 01D0 0000	00 01D0 007F	128	Tracer_MSMC0_CFG	Tracer_MSMC0_CFG	Tracer_MSMC0_CFG
00 01D0 0080	00 01D0 7FFF	32K-128	Reserved	Reserved	Reserved
00 01D0 8000	00 01D0 807F	128	Tracer_MSMC1_CFG	Tracer_MSMC1_CFG	Tracer_MSMC1_CFG
00 01D0 8080	00 01D0 FFFF	32K-128	Reserved	Reserved	Reserved
00 01D1 0000	00 01D1 007F	128	Tracer_MSMC2_CFG	Tracer_MSMC2_CFG	Tracer_MSMC2_CFG
00 01D1 0080	00 01D1 7FFF	32K-128	Reserved	Reserved	Reserved
00 01D1 8000	00 01D1 807F	128	Tracer_MSMC3_CFG	Tracer_MSMC3_CFG	Tracer_MSMC3_CFG
00 01D1 8080	00 01D1 FFFF	32K-128	Reserved	Reserved	Reserved
00 01D2 0000	00 01D2 007F	128	Tracer_QM_M_CFG	Tracer_QM_M_CFG	Tracer_QM_M_CFG
00 01D2 0080	00 01D2 7FFF	32K-128	Reserved	Reserved	Reserved
00 01D2 8000	00 01D2 807F	128	Tracer_DDR3A_CFG	Tracer_DDR3A_CFG	Tracer_DDR3A_CFG
00 01D2 8080	00 01D2 FFFF	32K-128	Reserved	Reserved	Reserved
00 01D3 0000	00 01D3 007F	128	Tracer_SM_CFG	Tracer_SM_CFG	Tracer_SM_CFG
00 01D3 0080	00 01D3 7FFF	32K-128	Reserved	Reserved	Reserved
00 01D3 8000	00 01D3 807F	128	Tracer_QM_CFG1_CFG	Tracer_QM_CFG1_CFG	Tracer_QM_CFG1_CFG
00 01D3 8080	00 01D3 FFFF	32K-128	Reserved	Reserved	Reserved
00 01D4 0000	00 01D4 007F	128	Tracer_CFG_CFG	Tracer_CFG_CFG	Tracer_CFG_CFG
00 01D4 0080	00 01D4 7FFF	32K-128	Reserved	Reserved	Reserved
00 01D4 8000	00 01D4 807F	128	Tracer_L2_0_CFG	Tracer_L2_0_CFG	Tracer_L2_0_CFG
00 01D4 8080	00 01D4 FFFF	32K-128	Reserved	Reserved	Reserved
00 01D5 0000	00 01D5 007F	128	Tracer_L2_1_CFG	Tracer_L2_1_CFG	Tracer_L2_1_CFG
00 01D5 0080	00 01D5 7FFF	32K-128	Reserved	Reserved	Reserved
00 01D5 8000	00 01D5 807F	128	Tracer_L2_2_CFG	Tracer_L2_2_CFG	Tracer_L2_2_CFG
00 01D5 8080	00 01D5 FFFF	32K-128	Reserved	Reserved	Reserved
00 01D6 0000	00 01D6 007F	128	Tracer_L2_3_CFG	Tracer_L2_3_CFG	Tracer_L2_3_CFG
00 01D6 0080	00 01D6 7FFF	32K-128	Reserved	Reserved	Reserved
00 01D6 8000	00 01D6 807F	128	Tracer_L2_4_CFG	Tracer_L2_4_CFG	Tracer_L2_4_CFG
00 01D6 8080	00 01D6 FFFF	32K-128	Reserved	Reserved	Reserved
00 01D7 0000	00 01D7 007F	128	Tracer_L2_5_CFG	Tracer_L2_5_CFG	Tracer_L2_5_CFG
00 01D7 0080	00 01D7 7FFF	32K-128	Reserved	Reserved	Reserved
00 01D7 8000	00 01D7 807F	128	Tracer_L2_6_CFG	Tracer_L2_6_CFG	Tracer_L2_6_CFG

Copyright © 2012–2017, Texas Instruments Incorporated

Table 8-1. Device Memory Map Summary for 66AK2Hxx (continued)

PHYSICAL 40-BIT ADDRESS		BYTES	ARM VIEW	DSP VIEW	SOC VIEW
START	END				
00 01D7 8080	00 01D7 FFFF	32K-128	Reserved	Reserved	Reserved
00 01D8 0000	00 01D8 007F	128	Tracer_L2_7_CFG	Tracer_L2_7_CFG	Tracer_L2_7_CFG
00 01D8 0080	00 01D8 7FFF	32K-128	Reserved	Reserved	Reserved
00 01D8 8000	00 01D8 807F	128	Reserved	Reserved	Reserved
00 01D8 8080	00 01D8 8FFF	32K-128	Reserved	Reserved	Reserved
00 01D9 0000	00 01D9 007F	128	Reserved	Reserved	Reserved
00 01D9 0080	00 01D9 7FFF	32K-128	Reserved	Reserved	Reserved
00 01D9 8000	00 01D9 807F	128	Reserved	Reserved	Reserved
00 01D9 8080	00 01D9 FFFF	32K-128	Reserved	Reserved	Reserved
00 01DA 0000	00 01DA 007F	128	Tracer_QM_CFG2_CFG	Tracer_QM_CFG2_CFG	Tracer_QM_CFG2_CFG
00 01DA 0080	00 01DA 7FFF	32K-128	Reserved	Reserved	Reserved
00 01DA 8000	00 01DA 807F	128	Reserved	Reserved	Reserved
00 01DA 8080	00 01DA FFFF	32K-128	Reserved	Reserved	Reserved
00 01DB 0000	00 01DB 007F	128	Tracer_DDR3B_CFG	Tracer_DDR3B_CFG	Tracer_DDR3B_CFG
00 01DB 0080	00 01DB 7FFF	32K-128	Reserved	Reserved	Reserved
00 01DB 8000	00 01DB 807F	128	Reserved	Reserved	Reserved
00 01DB 8080	00 01DB 8FFF	32K-128	Reserved	Reserved	Reserved
00 01DC 0000	00 01DC 007F	128	Tracer_TPCC0_4_CFG	Tracer_TPCC0_4_CFG	Tracer_TPCC0_4_CFG
00 01DC 0080	00 01DC 7FFF	32K-128	Reserved	Reserved	Reserved
00 01DC 8000	00 01DC 807F	128	Tracer_TPCC1_2_3_CFG	Tracer_TPCC1_2_3_CFG	Tracer_TPCC1_2_3_CFG
00 01DC 8080	00 01DC FFFF	32K-128	Reserved	Reserved	Reserved
00 01DD 0000	00 01DD 007F	128	Tracer_INTC_CFG	Tracer_INTC_CFG	Tracer_INTC_CFG
00 01DD 0080	00 01DD 7FFF	32K-128	Reserved	Reserved	Reserved
00 01DD 8000	00 01DD 807F	128	Tracer_MSMC4_CFG	Tracer_MSMC4_CFG	Tracer_MSMC4_CFG
00 01DD 8080	00 01DD FFFF	32K-128	Reserved	Reserved	Reserved
00 01DE 0000	00 01DE 007F	128	Tracer_MSMC5_CFG	Tracer_MSMC5_CFG	Tracer_MSMC5_CFG
00 01DE 0000	00 01DE 007F	128	Tracer_MSMC6_CFG	Tracer_MSMC6_CFG	Tracer_MSMC6_CFG
00 01DE 0000	00 01DE 007F	128	Tracer_MSMC7_CFG	Tracer_MSMC7_CFG	Tracer_MSMC7_CFG
00 01DE 0080	00 01DE 7FFF	32K-384	Reserved	Reserved	Reserved
00 01DE 8000	00 01DE 807F	128	Tracer_SPI_ROM_EMIF16_CFG	Tracer_SPI_ROM_EMIF16_CFG	Tracer_SPI_ROM_EMIF16_CFG
00 01DE 8080	00 01DF FFFF	64K-128	Reserved	Reserved	Reserved
00 01E0 0000	00 01E3 FFFF	256K	Reserved	Reserved	Reserved
00 01E4 0000	00 01E4 3FFF	16K	Reserved	Reserved	Reserved
00 01E4 4000	00 01E7 FFFF	240k	Reserved	Reserved	Reserved
00 01E8 0000	00 01E8 3FFF	16K	ARM CorePac VBUSP Memory Mapped Registers	ARM CorePac VBUSP Memory Mapped Registers	ARM CorePac VBUSP Memory Mapped Registers
00 01E8 4000	00 01EB FFFF	240k	Reserved	Reserved	Reserved
00 01EC 0000	00 01EF FFFF	256K	Reserved	Reserved	Reserved
00 01F0 0000	00 01F7 FFFF	512K	Reserved	Reserved	Reserved
00 01F8 0000	00 01F8 FFFF	64K	Reserved	Reserved	Reserved
00 01F9 0000	00 01F9 FFFF	64K	Reserved	Reserved	Reserved
00 01FA 0000	00 01FB FFFF	128K	Reserved	Reserved	Reserved
00 01FC 0000	00 01FD FFFF	128K	Reserved	Reserved	Reserved
00 01FE 0000	00 01FF FFFF	128K	Reserved	Reserved	Reserved
00 0200 0000	00 020F FFFF	1M	Network Coprocessor (Packet Accelerator, 1-gigabit Ethernet switch subsystem and Security Accelerator)	Network Coprocessor (Packet Accelerator, 1-gigabit Ethernet switch subsystem and Security Accelerator)	Network Coprocessor (Packet Accelerator, 1-gigabit Ethernet switch subsystem and Security Accelerator)
00 0210 0000	00 0210 FFFF	64K	Reserved	Reserved	Reserved
00 0211 0000	00 0211 FFFF	64K	Reserved	Reserved	Reserved
00 0212 0000	00 0213 FFFF	128K	Reserved	Reserved	Reserved
00 0214 0000	00 0215 FFFF	128K	Reserved	Reserved	Reserved

Copyright © 2012–2017, Texas Instruments Incorporated

Table 8-1. Device Memory Map Summary for 66AK2Hxx (continued)

PHYSICAL 40-BIT ADDRESS		BYTES	ARM VIEW	DSP VIEW	SOC VIEW
START	END				
00 0216 0000	00 0217 FFFF	128K	Reserved	Reserved	Reserved
00 0218 0000	00 0218 7FFF	32k	Reserved	Reserved	Reserved
00 0218 8000	00 0218 FFFF	32k	Reserved	Reserved	Reserved
00 0219 0000	00 0219 FFFF	64k	Reserved	Reserved	Reserved
00 021A 0000	00 021A FFFF	64K	Reserved	Reserved	Reserved
00 021B 0000	00 021B FFFF	64K	Reserved	Reserved	Reserved
00 021C 0000	00 021C 03FF	1K	Reserved	Reserved	Reserved
00 021C 0400	00 021C 3FFF	15K	Reserved	Reserved	Reserved
00 021C 4000	00 021C 43FF	1K	Reserved	Reserved	Reserved
00 021C 4400	00 021C 5FFF	7K	Reserved	Reserved	Reserved
00 021C 6000	00 021C 63FF	1K	Reserved	Reserved	Reserved
00 021C 6400	00 021C 7FFF	7K	Reserved	Reserved	Reserved
00 021C 8000	00 021C 83FF	1K	Reserved	Reserved	Reserved
00 021C 8400	00 021C FFFF	31K	Reserved	Reserved	Reserved
00 021D 0000	00 021D 00FF	256	Reserved	Reserved	Reserved
00 021D 0100	00 021D 3FFF	16K	Reserved	Reserved	Reserved
00 021D 4000	00 021D 40FF	256	Reserved	Reserved	Reserved
00 021D 4100	00 021D 7FFF	16K	Reserved	Reserved	Reserved
00 021D 8000	00 021D 80FF	256	Reserved	Reserved	Reserved
00 021D 8100	00 021D BFFF	16K	Reserved	Reserved	Reserved
00 021D C000	00 021D C0FF	256	Reserved	Reserved	Reserved
00 021D C100	00 021D EFFF	12K-256	Reserved	Reserved	Reserved
00 021D F000	00 021D F07F	128	Reserved	Reserved	Reserved
00 021D F080	00 021D FFFF	4K-128	Reserved	Reserved	Reserved
00 021E 0000	00 021E FFFF	64K	Reserved	Reserved	Reserved
00 021F 0000	00 021F 07FF	2K	Reserved	Reserved	Reserved
00 021F 0800	00 021F 0FFF	2K	Reserved	Reserved	Reserved
00 021F 1000	00 021F 17FF	2K	Reserved	Reserved	Reserved
00 021F 1800	00 021F 3FFF	10K	Reserved	Reserved	Reserved
00 021F 4000	00 021F 47FF	2K	Reserved	Reserved	Reserved
00 021F 4800	00 021F 7FFF	14K	Reserved	Reserved	Reserved
00 021F 8000	00 021F 87FF	2K	Reserved	Reserved	Reserved
00 021F 8800	00 021F BFFF	14K	Reserved	Reserved	Reserved
00 021F C000	00 021F C7FF	2K	Reserved	Reserved	Reserved
00 021F C800	00 021F FFFF	14K	Reserved	Reserved	Reserved
00 0220 0000	00 0220 007F	128	Timer0	Timer0	Timer0
00 0220 0080	00 0220 FFFF	64K-128	Reserved	Reserved	Reserved
00 0221 0000	00 0221 007F	128	Timer1	Timer1	Timer1
00 0221 0080	00 0221 FFFF	64K-128	Reserved	Reserved	Reserved
00 0222 0000	00 0222 007F	128	Timer2	Timer2	Timer2
00 0222 0080	00 0222 FFFF	64K-128	Reserved	Reserved	Reserved
00 0223 0000	00 0223 007F	128	Timer3	Timer3	Timer3
00 0223 0080	00 0223 FFFF	64K-128	Reserved	Reserved	Reserved
00 0224 0000	00 0224 007F	128	Timer4 (1)	Timer4 (1)	Timer4 (1)
00 0224 0080	00 0224 FFFF	64K-128	Reserved	Reserved	Reserved
00 0225 0000	00 0225 007F	128	Timer5 (1)	Timer5 (1)	Timer5 (1)
00 0225 0080	00 0225 FFFF	64K-128	Reserved	Reserved	Reserved
00 0226 0000	00 0226 007F	128	Timer6 (1)	Timer6 (1)	Timer6 (1)
00 0226 0080	00 0226 FFFF	64K-128	Reserved	Reserved	Reserved

(1) 66AK2H12/14 only.

Copyright © 2012–2017, Texas Instruments Incorporated

Table 8-1. Device Memory Map Summary for 66AK2Hxx (continued)

PHYSICAL 40-BIT ADDRESS		BYTES	ARM VIEW	DSP VIEW	SOC VIEW
START	END				
00 0227 0000	00 0227 007F	128	Timer7 (1)	Timer7 (1)	Timer7 (1)
00 0227 0080	00 0227 FFFF	64K-128	Reserved	Reserved	Reserved
00 0228 0000	00 0228 007F	128	Timer 8	Timer 8	Timer 8
00 0228 0080	00 0228 FFFF	64K-128	Reserved	Reserved	Reserved
00 0229 0000	00 0229 007F	128	Timer 9	Timer 9	Timer 9
00 0229 0080	00 0229 FFFF	64K-128	Reserved	Reserved	Reserved
00 022A 0000	00 022A 007F	128	Timer 10	Timer 10	Timer 10
00 022A 0080	00 022A FFFF	64K-128	Reserved	Reserved	Reserved
00 022B 0000	00 022B 007F	128	Timer 11	Timer 11	Timer 11
00 022B 0080	00 022B FFFF	64K-128	Reserved	Reserved	Reserved
00 022C 0000	00 022C 007F	128	Timer 12	Timer 12	Timer 12
00 022C 0080	00 022C FFFF	64K-128	Reserved	Reserved	Reserved
00 022D 0000	00 022D 007F	128	Timer 13	Timer 13	Timer 13
00 022D 0080	00 022D FFFF	64K-128	Reserved	Reserved	Reserved
00 022E 0000	00 022E 007F	128	Timer 14	Timer 14	Timer 14
00 022E 0080	00 022E FFFF	64K-128	Reserved	Reserved	Reserved
00 022F 0000	00 022F 007F	128	Timer 15	Timer 15	Timer 15
00 022F 0080	00 022F 00FF	128	Timer 16	Timer 16	Timer 16
00 022F 0100	00 022F 017F	128	Timer 17	Timer 17	Timer 17
00 022F 0180	00 022F 01FF	128	Timer 18 (1)	Timer 18 (1)	Timer 18 (1)
00 022F 0200	00 022F 027F	128	Timer 19 (1)	Timer 19 (1)	Timer 19 (1)
00 0230 0000	00 0230 FFFF	64K	Reserved	Reserved	Reserved
00 0231 0000	00 0231 01FF	512	PLL Controller	PLL Controller	PLL Controller
00 0231 0200	00 0231 9FFF	40K-512	Reserved	Reserved	Reserved
00 0231 A000	00 0231 BFFF	8K	HyperLink0 SerDes Config	HyperLink0 SerDes Config	HyperLink0 SerDes Config
00 0231 C000	00 0231 DFFF	8K	HyperLink1 SerDes Config	HyperLink1 SerDes Config	HyperLink1 SerDes Config
00 0231 E000	00 0231 FFFF	8K	10GbE SerDes Config (66AK2H14 only)	10GbE SerDes Config (66AK2H14 only)	10GbE SerDes Config (66AK2H14 only)
00 0232 0000	00 0232 3FFF	16K	PCIE SerDes Config	PCIE SerDes Config	PCIE SerDes Config
00 0232 4000	00 0232 5FFF	8K	Reserved	Reserved	Reserved
00 0232 6000	00 0232 7FFF	8K	Reserved	Reserved	Reserved
00 0232 8000	00 0232 8FFF	4K	DDRB PHY Config	DDRB PHY Config	DDRB PHY Config
00 0232 9000	00 0232 9FFF	4K	DDRA PHY Config	DDRA PHY Config	DDRA PHY Config
00 0232 A000	00 0232 BFFF	8K	PA SerDes Config	PA SerDes Config	PA SerDes Config
00 0232 C000	00 0232 DFFF	8K	SRIO SerDes Config	SRIO SerDes Config	SRIO SerDes Config
00 0232 E000	00 0232 EFFF	4K	Reserved	Reserved	Reserved
00 0232 F000	00 0232 FFFF	4K	Reserved	Reserved	Reserved
00 0233 0000	00 0233 03FF	1K	SmartReflex0	SmartReflex0	SmartReflex0
00 0233 0400	00 0233 07FF	1K	SmartReflex1	SmartReflex1	SmartReflex1
00 0233 0400	00 0233 FFFF	62K	Reserved	Reserved	Reserved
00 0234 0000	00 0234 00FF	256	Reserved	Reserved	Reserved
00 0234 0100	00 0234 3FFF	16K	Reserved	Reserved	Reserved
00 0234 4000	00 0234 40FF	256	Reserved	Reserved	Reserved
00 0234 4100	00 0234 7FFF	16K	Reserved	Reserved	Reserved
00 0234 8000	00 0234 80FF	256	Reserved	Reserved	Reserved
00 0234 8100	00 0234 BFFF	16K	Reserved	Reserved	Reserved
00 0234 C000	00 0234 C0FF	256	Reserved	Reserved	Reserved
00 0234 C100	00 0234 FFFF	16K	Reserved	Reserved	Reserved
00 0235 0000	00 0235 0FFF	4K	Power sleep controller (PSC)	Power sleep controller (PSC)	Power sleep controller (PSC)
00 0235 1000	00 0235 FFFF	64K-4K	Reserved	Reserved	Reserved
00 0236 0000	00 0236 03FF	1K	Memory protection unit (MPU) 0	Memory protection unit (MPU) 0	Memory protection unit (MPU) 0

Copyright © 2012–2017, Texas Instruments Incorporated

Table 8-1. Device Memory Map Summary for 66AK2Hxx (continued)

PHYSICAL 40-BIT ADDRESS		BYTES	ARM VIEW	DSP VIEW	SOC VIEW
START	END				
00 0236 0400	00 0236 7FFF	31K	Reserved	Reserved	Reserved
00 0236 8000	00 0236 83FF	1K	Memory protection unit (MPU) 1	Memory protection unit (MPU) 1	Memory protection unit (MPU) 1
00 0236 8400	00 0236 FFFF	31K	Reserved	Reserved	Reserved
00 0237 0000	00 0237 03FF	1K	Memory protection unit (MPU) 2	Memory protection unit (MPU) 2	Memory protection unit (MPU) 2
00 0237 0400	00 0237 7FFF	31K	Reserved	Reserved	Reserved
00 0237 8000	00 0237 83FF	1K	Memory protection unit (MPU) 3	Memory protection unit (MPU) 3	Memory protection unit (MPU) 3
00 0237 8400	00 0237 FFFF	31K	Reserved	Reserved	Reserved
00 0238 0000	00 0238 03FF	1K	Memory protection unit (MPU) 4	Memory protection unit (MPU) 4	Memory protection unit (MPU) 4
00 0238 8000	00 0238 83FF	1K	Memory protection unit (MPU) 5	Memory protection unit (MPU) 5	Memory protection unit (MPU) 5
00 0238 8400	00 0238 87FF	1K	Memory protection unit (MPU) 6	Memory protection unit (MPU) 6	Memory protection unit (MPU) 6
00 0238 8800	00 0238 8BFF	1K	Memory protection unit (MPU) 7	Memory protection unit (MPU) 7	Memory protection unit (MPU) 7
00 0238 8C00	00 0238 8FFF	1K	Memory protection unit (MPU) 8	Memory protection unit (MPU) 8	Memory protection unit (MPU) 8
00 0238 9000	00 0238 93FF	1K	Memory protection unit (MPU) 9	Memory protection unit (MPU) 9	Memory protection unit (MPU) 9
00 0238 9400	00 0238 97FF	1K	Memory protection unit (MPU) 10	Memory protection unit (MPU) 10	Memory protection unit (MPU) 10
00 0238 9800	00 0238 9BFF	1K	Memory protection unit (MPU) 11	Memory protection unit (MPU) 11	Memory protection unit (MPU) 11
00 0238 9C00	00 0238 9FFF	1K	Memory protection unit (MPU) 12	Memory protection unit (MPU) 12	Memory protection unit (MPU) 12
00 0238 A000	00 0238 A3FF	1K	Memory protection unit (MPU) 13	Memory protection unit (MPU) 13	Memory protection unit (MPU) 13
00 0238 A400	00 0238 A7FF	1K	Memory protection unit (MPU) 14	Memory protection unit (MPU) 14	Memory protection unit (MPU) 14
00 0238 A800	00 023F FFFF	471K	Reserved	Reserved	Reserved
00 0240 0000	00 0243 FFFF	256K	Reserved	Reserved	Reserved
00 0244 0000	00 0244 3FFF	16K	DSP trace formatter 0	DSP trace formatter 0	DSP trace formatter 0
00 0244 4000	00 0244 FFFF	48K	Reserved	Reserved	Reserved
00 0245 0000	00 0245 3FFF	16K	DSP trace formatter 1	DSP trace formatter 1	DSP trace formatter 1
00 0245 4000	00 0245 FFFF	48K	Reserved	Reserved	Reserved
00 0246 0000	00 0246 3FFF	16K	DSP trace formatter 2	DSP trace formatter 2	DSP trace formatter 2
00 0246 4000	00 0246 FFFF	48K	Reserved	Reserved	Reserved
00 0247 0000	00 0247 3FFF	16K	DSP trace formatter 3	DSP trace formatter 3	DSP trace formatter 3
00 0247 4000	00 0247 FFFF	48K	Reserved	Reserved	Reserved
00 0248 0000	00 0248 3FFF	16K	DSP trace formatter 4	DSP trace formatter 4	DSP trace formatter 4
00 0248 4000	00 0248 FFFF	48K	Reserved	Reserved	Reserved
00 0249 0000	00 0249 3FFF	16K	DSP trace formatter 5	DSP trace formatter 5	DSP trace formatter 5
00 0249 4000	00 0249 FFFF	48K	Reserved	Reserved	Reserved
00 024A 0000	00 024A 3FFF	16K	DSP trace formatter 6	DSP trace formatter 6	DSP trace formatter 6
00 024A 4000	00 024A FFFF	48K	Reserved	Reserved	Reserved
00 024B 0000	00 024B 3FFF	16K	DSP trace formatter 7	DSP trace formatter 7	DSP trace formatter 7
00 024B 4000	00 024B FFFF	48K	Reserved	Reserved	Reserved
00 024C 0000	00 024C 01FF	512	Reserved	Reserved	Reserved
00 024C 0200	00 024C 03FF	1K-512	Reserved	Reserved	Reserved
00 024C 0400	00 024C 07FF	1K	Reserved	Reserved	Reserved
00 024C 0800	00 024C FFFF	62K	Reserved	Reserved	Reserved
00 024D 0000	00 024F FFFF	192K	Reserved	Reserved	Reserved
00 0250 0000	00 0250 007F	128	Reserved	Reserved	Reserved
00 0250 0080	00 0250 7FFF	32K-128	Reserved	Reserved	Reserved
00 0250 8000	00 0250 FFFF	32K	Reserved	Reserved	Reserved
00 0251 0000	00 0251 FFFF	64K	Reserved	Reserved	Reserved
00 0252 0000	00 0252 03FF	1K	Reserved	Reserved	Reserved
00 0252 0400	00 0252 FFFF	64K-1K	Reserved	Reserved	Reserved
00 0253 0000	00 0253 007F	128	I^2C0	I^2C0	I^2C0
00 0253 0080	00 0253 03FF	1K-128	Reserved	Reserved	Reserved
00 0253 0400	00 0253 047F	128	I^2C1	I^2C1	I^2C1

Copyright © 2012–2017, Texas Instruments Incorporated

Table 8-1. Device Memory Map Summary for 66AK2Hxx (continued)

PHYSICAL 40-BIT ADDRESS		BYTES	ARM VIEW	DSP VIEW	SOC VIEW
START	END				
00 0253 0480	00 0253 07FF	1K-128	Reserved	Reserved	Reserved
00 0253 0800	00 0253 087F	128	I^2C2	I^2C2	I^2C2
00 0253 0880	00 0253 0BFF	1K-128	Reserved	Reserved	Reserved
00 0253 0C00	00 0253 0C3F	64	UART0	UART0	UART0
00 0253 0C40	00 0253 FFFF	1K-64	Reserved	Reserved	Reserved
00 0253 1000	00 0253 103F	64	UART1	UART1	UART1
00 0253 1040	00 0253 FFFF	60K-64	Reserved	Reserved	Reserved
00 0254 0000	00 0255 FFFF	128K	Reserved	Reserved	Reserved
00 0256 0000	00 0257 FFFF	128K	ARM CorePac INTC (GIC400) Memory Mapped Registers	ARM CorePac INTC (GIC400) Memory Mapped Registers	ARM CorePac INTC (GIC400) Memory Mapped Registers
00 0258 0000	00 025F FFFF	512K	Reserved	Reserved	Reserved
00 0260 0000	00 0260 1FFF	8K	Secondary interrupt controller (INTC) 0	Secondary interrupt controller (INTC) 0	Secondary interrupt controller (INTC) 0
00 0260 2000	00 0260 3FFF	8K	Reserved	Reserved	Reserved
00 0260 4000	00 0260 5FFF	8K	Secondary interrupt controller (INTC) 1	Secondary interrupt controller (INTC) 1	Secondary interrupt controller (INTC) 1
00 0260 6000	00 0260 7FFF	8K	Reserved	Reserved	Reserved
00 0260 8000	00 0260 9FFF	8K	Secondary interrupt controller (INTC) 2	Secondary interrupt controller (INTC) 2	Secondary interrupt controller (INTC) 2
00 0260 A000	00 0260 BEFF	8K-256	Reserved	Reserved	Reserved
00 0260 BF00	00 0260 BFFF	256	GPIO Config	GPIO Config	GPIO Config
00 0260 C000	00 0261 BFFF	64K	Reserved	Reserved	Reserved
00 0261 C000	00 0261 FFFF	16K	Reserved	Reserved	Reserved
00 0262 0000	00 0262 0FFF	4K	BOOTCFG chip-level registers	BOOTCFG chip-level registers	BOOTCFG chip-level registers
00 0262 1000	00 0262 FFFF	60K	Reserved	Reserved	Reserved
00 0263 0000	00 0263 FFFF	64K	USB PHY Config	USB PHY Config	USB PHY Config
00 0264 0000	00 0264 07FF	2K	Semaphore Config	Semaphore Config	Semaphore Config
00 0264 0800	00 0264 FFFF	62K	Reserved	Reserved	Reserved
00 0265 0000	00 0267 FFFF	192K	Reserved	Reserved	Reserved
00 0268 0000	00 0268 FFFF	512K	USB MMR Config	USB MMR Config	USB MMR Config
00 0270 0000	00 0270 7FFF	32K	EDMA channel controller (TPCC) 0	EDMA channel controller (TPCC) 0	EDMA channel controller (TPCC) 0
00 0270 8000	00 0270 FFFF	32K	EDMA channel controller (TPCC) 4	EDMA channel controller (TPCC) 4	EDMA channel controller (TPCC) 4
00 0271 0000	00 0271 FFFF	64K	Reserved	Reserved	Reserved
00 0272 0000	00 0272 7FFF	32K	EDMA channel controller (TPCC) 1	EDMA channel controller (TPCC) 1	EDMA channel controller (TPCC) 1
00 0272 8000	00 0272 FFFF	32K	EDMA channel controller (TPCC) 3	EDMA channel controller (TPCC) 3	EDMA channel controller (TPCC) 3
00 0273 0000	00 0273 FFFF	64K	Reserved	Reserved	Reserved
00 0274 0000	00 0274 7FFF	32K	EDMA channel controller (TPCC) 2	EDMA channel controller (TPCC) 2	EDMA channel controller (TPCC) 2
00 0274 8000	00 0275 FFFF	96K	Reserved	Reserved	Reserved
00 0276 0000	00 0276 03FF	1K	EDMA TPCC0 transfer controller (TPTC) 0	EDMA TPCC0 transfer controller (TPTC) 0	EDMA TPCC0 transfer controller (TPTC) 0
00 0276 0400	00 0276 7FFF	31K	Reserved	Reserved	Reserved
00 0276 8000	00 0276 83FF	1K	EDMA TPCC0 transfer controller (TPTC) 1	EDMA TPCC0 transfer controller (TPTC) 1	EDMA TPCC0 transfer controller (TPTC) 1
00 0276 8400	00 0276 FFFF	31K	Reserved	Reserved	Reserved
00 0277 0000	00 0277 03FF	1K	EDMA TPCC1 transfer controller (TPTC) 0	EDMA TPCC1 transfer controller (TPTC) 0	EDMA TPCC1 transfer controller (TPTC) 0
00 0277 0400	00 0277 7FFF	31K	Reserved	Reserved	Reserved
00 0277 8000	00 0277 83FF	1K	EDMA TPCC1 transfer controller (TPTC) 1	EDMA TPCC1 transfer controller (TPTC) 1	EDMA TPCC1 transfer controller (TPTC) 1
00 0278 0400	00 0277 FFFF	31K	Reserved	Reserved	Reserved

Copyright © 2012–2017, Texas Instruments Incorporated

Table 8-1. Device Memory Map Summary for 66AK2Hxx (continued)

PHYSICAL 40-BIT ADDRESS		BYTES	ARM VIEW	DSP VIEW	SOC VIEW
START	END				
00 0278 0000	00 0278 03FF	1K	EDMA TPCC1 transfer controller (TPTC) 2	EDMA TPCC1 transfer controller (TPTC) 2	EDMA TPCC1 transfer controller (TPTC) 2
00 0278 0400	00 0278 7FFF	31K	Reserved	Reserved	Reserved
00 0278 8000	00 0278 83FF	1K	EDMA TPCC1 transfer controller (TPTC) 3	EDMA TPCC1 transfer controller (TPTC) 3	EDMA TPCC1 transfer controller (TPTC) 3
00 0278 8400	00 0278 FFFF	31K	Reserved	Reserved	Reserved
00 0279 0000	00 0279 03FF	1K	EDMA TPCC2 transfer controller (TPTC) 0	EDMA TPCC2 transfer controller (TPTC) 0	EDMA TPCC2 transfer controller (TPTC) 0
00 0279 0400	00 0279 7FFF	31K	Reserved	Reserved	Reserved
00 0279 8000	00 0279 83FF	1K	EDMA TPCC2 transfer controller (TPTC) 1	EDMA TPCC2 transfer controller (TPTC) 1	EDMA TPCC2 transfer controller (TPTC) 1
00 0279 8400	00 0279 FFFF	31K	Reserved	Reserved	Reserved
00 027A 0000	00 027A 03FF	1K	EDMA TPCC2 transfer controller (TPTC) 2	EDMA TPCC2 transfer controller (TPTC) 2	EDMA TPCC2 transfer controller (TPTC) 2
00 027A 0400	00 027A 7FFF	31K	Reserved	Reserved	Reserved
00 027A 8000	00 027A 83FF	1K	EDMA TPCC2 transfer controller (TPTC) 3	EDMA TPCC2 transfer controller (TPTC) 3	EDMA TPCC2 transfer controller (TPTC) 3
00 027A 8400	00 027A FFFF	31K	Reserved	Reserved	Reserved
00 027B 0000	00 027B 03FF	1K	EDMA TPCC3 transfer controller (TPTC) 0	EDMA TPCC3 transfer controller (TPTC) 0	EDMA TPCC3 transfer controller (TPTC) 0
00 027B 0400	00 027B 7FFF	31K	Reserved	Reserved	Reserved
00 027B 8000	00 027B 83FF	1K	EDMA TPCC3 transfer controller (TPTC) 1	EDMA TPCC3 transfer controller (TPTC) 1	EDMA TPCC3 transfer controller (TPTC) 1
00 027B 8400	00 027B 87FF	1K	EDMA TPCC4 transfer controller (TPTC) 0	EDMA TPCC4 transfer controller (TPTC) 0	EDMA TPCC4 transfer controller (TPTC) 0
00 027B 8800	00 027B 8BFF	1K	EEDMA TPCC4 transfer controller (TPTC) 1	EEDMA TPCC4 transfer controller (TPTC) 1	EEDMA TPCC4 transfer controller (TPTC) 1
00 027B 8C00	00 027B FFFF	29K	Reserved	Reserved	Reserved
00 027C 0000	00 027C 03FF	1K	Reserved	Reserved	Reserved
00 027C 0400	00 027C FFFF	63K	Reserved	Reserved	Reserved
00 027D 0000	00 027D 3FFF	16K	TI embedded trace buffer (TETB) - CorePac0	TI embedded trace buffer (TETB) - CorePac0	TI embedded trace buffer (TETB) - CorePac0
00 027D 4000	00 027D 7FFF	16K	TBR_SYS_ARM CorePac - Trace buffer - ARM CorePac	TBR_SYS_ARM CorePac - Trace buffer - ARM CorePac	TBR_SYS_ARM CorePac - Trace buffer - ARM CorePac
00 027D 8000	00 027D FFFF	32K	Reserved	Reserved	Reserved
00 027E 0000	00 027E 3FFF	16K	TI embedded trace buffer (TETB) - CorePac1	TI embedded trace buffer (TETB) - CorePac1	TI embedded trace buffer (TETB) - CorePac1
00 027E 4000	00 027E FFFF	48K	Reserved	Reserved	Reserved
00 027F 0000	00 027F 3FFF	16K	TI embedded trace buffer (TETB) - CorePac2	TI embedded trace buffer (TETB) - CorePac2	TI embedded trace buffer (TETB) - CorePac2
00 027F 4000	00 027F FFFF	48K	Reserved	Reserved	Reserved
00 0280 0000	00 0280 3FFF	16K	TI embedded trace buffer (TETB) - CorePac3	TI embedded trace buffer (TETB) - CorePac3	TI embedded trace buffer (TETB) - CorePac3
00 0280 4000	00 0280 FFFF	48K	Reserved	Reserved	Reserved
00 0281 0000	00 0281 3FFF	16K	TI embedded trace buffer (TETB) - CorePac4 (66AK2H12/14 only)	TI embedded trace buffer (TETB) - CorePac4 (66AK2H12/14 only)	TI embedded trace buffer (TETB) - CorePac4 (66AK2H12/14 only)
00 0281 4000	00 0281 FFFF	48K	Reserved	Reserved	Reserved
00 0282 0000	00 0282 3FFF	16K	TI embedded trace buffer (TETB) - CorePac5 (66AK2H12/14 only)	TI embedded trace buffer (TETB) - CorePac5 (66AK2H12/14 only)	TI embedded trace buffer (TETB) - CorePac5 (66AK2H12/14 only)
00 0282 4000	00 0282 FFFF	48K	Reserved	Reserved	Reserved
00 0283 0000	00 0283 3FFF	16K	TI embedded trace buffer (TETB) - CorePac6 (66AK2H12/14 only)	TI embedded trace buffer (TETB) - CorePac6 (66AK2H12/14 only)	TI embedded trace buffer (TETB) - CorePac6 (66AK2H12/14 only)
00 0283 4000	00 0283 FFFF	48K	Reserved	Reserved	Reserved
00 0284 0000	00 0284 3FFF	16K	TI embedded trace buffer (TETB) - CorePac7 (66AK2H12/14 only)	TI embedded trace buffer (TETB) - CorePac7 (66AK2H12/14 only)	TI embedded trace buffer (TETB) - CorePac7 (66AK2H12/14 only)
00 0284 4000	00 0284 FFFF	48K	Reserved	Reserved	Reserved

Copyright © 2012–2017, Texas Instruments Incorporated

Table 8-1. Device Memory Map Summary for 66AK2Hxx (continued)

PHYSICAL 40-BIT ADDRESS		BYTES	ARM VIEW	DSP VIEW	SOC VIEW
START	END				
00 0285 0000	00 0285 7FFF	32K	TI embedded trace buffer (TETB) - system	TI embedded trace buffer (TETB) - system	TI embedded trace buffer (TETB) - system
00 0285 8000	00 0285 FFFF	32K	Reserved	Reserved	Reserved
00 0286 0000	00 028F FFFF	640K	Reserved	Reserved	Reserved
00 0290 0000	00 0293 FFFF	256K	Serial RapidIO configuration (SRIO)	Serial RapidIO configuration (SRIO)	Serial RapidIO configuration (SRIO)
00 0294 0000	00 029F FFFF	768K	Reserved	Reserved	Reserved
00 02A0 0000	00 02AF FFFF	1M	Navigator configuration	Navigator configuration	Navigator configuration
00 02B0 0000	00 02BF FFFF	1M	Navigator linking RAM	Navigator linking RAM	Navigator linking RAM
00 02C0 0000	00 02C0 FFFF	64K	Reserved	Reserved	Reserved
00 02C1 0000	00 02C1 FFFF	64K	Reserved	Reserved	Reserved
00 02C2 0000	00 02C3 FFFF	128K	Reserved	Reserved	Reserved
00 02C4 0000	00 02C5 FFFF	128K	Reserved	Reserved	Reserved
00 02C6 0000	00 02C7 FFFF	128K	Reserved	Reserved	Reserved
00 02C8 0000	00 02C8 FFFF	64K	Reserved	Reserved	Reserved
00 02C9 0000	00 02C9 FFFF	64K	Reserved	Reserved	Reserved
00 02CA 0000	00 02CB FFFF	128K	Reserved	Reserved	Reserved
00 02CC 0000	00 02CD FFFF	128K	Reserved	Reserved	Reserved
00 02CE 0000	00 02EF FFFF	15M-896K	Reserved	Reserved	Reserved
00 02F0 0000	00 02FF FFFF	1M	10GbE Config (66AK2H14 only)	10GbE Config (66AK2H14 only)	10GbE Config (66AK2H14 only)
00 0300 0000	00 030F FFFF	1M	Debug_SS Configuration	Debug_SS Configuration	Debug_SS Configuration
00 0310 0000	00 07FF FFFF	79M	Reserved	Reserved	Reserved
00 0800 0000	00 0801 FFFF	128K	Reserved	Extended memory controller (XMC) configuration	Reserved
00 0802 0000	00 0BBF FFFF	60M-128K	Reserved	Reserved	Reserved
00 0BC0 0000	00 0BCF FFFF	1M	Multicore shared memory controller (MSMC) config	Multicore shared memory controller (MSMC) config	Multicore shared memory controller (MSMC) config
00 0BD0 0000	00 0BFF FFFF	3M	Reserved	Reserved	Reserved
00 0C00 0000	00 0C5F FFFF	6M	Multicore shared memory (MSM)	Multicore shared memory (MSM)	Multicore shared memory (MSM)
00 0C60 0000	00 0FFF FFFF	58M	Reserved	Reserved	Reserved
00 1000 0000	00 107F FFFF	8M	Reserved	Reserved	Reserved
00 1080 0000	00 108F FFFF	1M	CorePac0 L2 SRAM	CorePac0 L2 SRAM	CorePac0 L2 SRAM
00 1090 0000	00 10DF FFFF	5M	Reserved	Reserved	Reserved
00 10E0 0000	00 10E0 7FFF	32K	CorePac0 L1P SRAM	CorePac0 L1P SRAM	CorePac0 L1P SRAM
00 10E0 8000	00 10EF FFFF	1M-32K	Reserved	Reserved	Reserved
00 10F0 0000	00 10F0 7FFF	32K	CorePac0 L1D SRAM	CorePac0 L1D SRAM	CorePac0 L1D SRAM
00 10F0 8000	00 117F FFFF	9M-32K	Reserved	Reserved	Reserved
00 1180 0000	00 118F FFFF	1M	CorePac1 L2 SRAM	CorePac1 L2 SRAM	CorePac1 L2 SRAM
00 1190 0000	00 11DF FFFF	5M	Reserved	Reserved	Reserved
00 11E0 0000	00 11E0 7FFF	32K	CorePac1 L1P SRAM	CorePac1 L1P SRAM	CorePac1 L1P SRAM
00 11E0 8000	00 11EF FFFF	1M-32K	Reserved	Reserved	Reserved
00 11F0 0000	00 11F0 7FFF	32K	CorePac1 L1D SRAM	CorePac1 L1D SRAM	CorePac1 L1D SRAM
00 11F0 8000	00 127F FFFF	9M-32K	Reserved	Reserved	Reserved
00 1280 0000	00 128F FFFF	1M	CorePac2 L2 SRAM	CorePac2 L2 SRAM	CorePac2 L2 SRAM
00 1290 0000	00 12DF FFFF	5M	Reserved	Reserved	Reserved
00 12E0 0000	00 12E0 7FFF	32K	CorePac2 L1P SRAM	CorePac2 L1P SRAM	CorePac2 L1P SRAM
00 12E0 8000	00 12EF FFFF	1M-32K	Reserved	Reserved	Reserved
00 12F0 0000	00 12F0 7FFF	32K	CorePac2 L1D SRAM	CorePac2 L1D SRAM	CorePac2 L1D SRAM
00 12F0 8000	00 137F FFFF	9M-32K	Reserved	Reserved	Reserved
00 1380 0000	00 1388 FFFF	1M	CorePac3 L2 SRAM	CorePac3 L2 SRAM	CorePac3 L2 SRAM
00 1390 0000	00 13DF FFFF	5M	Reserved	Reserved	Reserved
00 13E0 0000	00 13E0 7FFF	32K	CorePac3 L1P SRAM	CorePac3 L1P SRAM	CorePac3 L1P SRAM

Copyright © 2012–2017, Texas Instruments Incorporated

Table 8-1. Device Memory Map Summary for 66AK2Hxx (continued)

PHYSICAL 40-BIT ADDRESS		BYTES	ARM VIEW	DSP VIEW	SOC VIEW
START	END				
00 13E0 8000	00 13EF FFFF	1M-32K	Reserved	Reserved	Reserved
00 13F0 0000	00 13F0 7FFF	32K	CorePac3 L1D SRAM	CorePac3 L1D SRAM	CorePac3 L1D SRAM
00 13F0 8000	00 147F FFFF	9M-32K	Reserved	Reserved	Reserved
00 1480 0000	00 148F FFFF	1M	CorePac4 L2 SRAM (66AK2H12/14 only)	CorePac4 L2 SRAM (66AK2H12/14 only)	CorePac4 L2 SRAM (66AK2H12/14 only)
00 1490 0000	00 14DF FFFF	5M	Reserved	Reserved	Reserved
00 14E0 0000	00 14E0 7FFF	32K	CorePac4 L1P SRAM (66AK2H12/14 only)	CorePac4 L1P SRAM (66AK2H12/14 only)	CorePac4 L1P SRAM (66AK2H12/14 only)
00 14E0 8000	00 14EF FFFF	1M-32K	Reserved	Reserved	Reserved
00 14F0 0000	00 14F0 7FFF	32K	CorePac4 L1D SRAM (66AK2H12/14 only)	CorePac4 L1D SRAM (66AK2H12/14 only)	CorePac4 L1D SRAM (66AK2H12/14 only)
00 14F0 8000	00 157F FFFF	9M-32K	Reserved	Reserved	Reserved
00 1580 0000	00 158F FFFF	1M	CorePac5 L2 SRAM (66AK2H12/14 only)	CorePac5 L2 SRAM (66AK2H12/14 only)	CorePac5 L2 SRAM (66AK2H12/14 only)
00 1590 0000	00 15DF FFFF	5M	Reserved	Reserved	Reserved
00 15E0 0000	00 15E0 7FFF	32K	CorePac5 L1P SRAM (66AK2H12/14 only)	CorePac5 L1P SRAM (66AK2H12/14 only)	CorePac5 L1P SRAM (66AK2H12/14 only)
00 15E0 8000	00 15EF FFFF	1M-32K	Reserved	Reserved	Reserved
00 15F0 0000	00 15F0 7FFF	32K	CorePac5 L1D SRAM (66AK2H12/14 only)	CorePac5 L1D SRAM (66AK2H12/14 only)	CorePac5 L1D SRAM (66AK2H12/14 only)
00 15F0 8000	00 167F FFFF	9M-32K	Reserved	Reserved	Reserved
00 1680 0000	00 168F FFFF	1M	CorePac6 L2 SRAM (66AK2H12/14 only)	CorePac6 L2 SRAM (66AK2H12/14 only)	CorePac6 L2 SRAM (66AK2H12/14 only)
00 1690 0000	00 16DF FFFF	5M	Reserved	Reserved	Reserved
00 16E0 0000	00 16E0 7FFF	32K	CorePac6 L1P SRAM (66AK2H12/14 only)	CorePac6 L1P SRAM (66AK2H12/14 only)	CorePac6 L1P SRAM (66AK2H12/14 only)
00 16E0 8000	00 16EF FFFF	1M-32K	Reserved	Reserved	Reserved
00 16F0 0000	00 16F0 7FFF	32K	CorePac6 L1D SRAM (66AK2H12/14 only)	CorePac6 L1D SRAM (66AK2H12/14 only)	CorePac6 L1D SRAM (66AK2H12/14 only)
00 16F0 8000	00 177F FFFF	9M-32K	Reserved	Reserved	Reserved
00 1780 0000	00 178F FFFF	1M	CorePac7 L2 SRAM (66AK2H12/14 only)	CorePac7 L2 SRAM (66AK2H12/14 only)	CorePac7 L2 SRAM (66AK2H12/14 only)
00 1790 0000	00 17DF FFFF	5M	Reserved	Reserved	Reserved
00 17E0 0000	00 17E0 7FFF	32K	CorePac7 L1P SRAM (66AK2H12/14 only)	CorePac7 L1P SRAM (66AK2H12/14 only)	CorePac7 L1P SRAM (66AK2H12/14 only)
00 17E0 8000	00 17EF FFFF	1M-32K	Reserved	Reserved	Reserved
00 17F0 0000	00 17F0 7FFF	32K	CorePac7 L1D SRAM (66AK2H12/14 only)	CorePac7 L1D SRAM (66AK2H12/14 only)	CorePac7 L1D SRAM (66AK2H12/14 only)
00 17F0 8000	00 1FFF FFFF	129M-32K	Reserved	Reserved	Reserved
00 2000 0000	00 200F FFFF	1M	System trace manager (STM) configuration	System trace manager (STM) configuration	System trace manager (STM) configuration
00 2010 0000	00 201F FFFF	1M	Reserved	Reserved	Reserved
00 2020 0000	00 205F FFFF	4M	Reserved	Reserved	Reserved
00 2060 0000	00 206F FFFF	1M	Reserved	Reserved	Reserved
00 2070 0000	00 207F FFFF	1M	Reserved	Reserved	Reserved
00 2080 0000	00 208F FFFF	1M	Reserved	Reserved	Reserved
00 2090 0000	00 209F FFFF	1M	Reserved	Reserved	Reserved
00 20A0 0000	00 20A3 FFFF	256K	Reserved	Reserved	Reserved
00 20A4 0000	00 20A4 FFFF	64K	Reserved	Reserved	Reserved
00 20A5 0000	00 20AF FFFF	704K	Reserved	Reserved	Reserved
00 20B0 0000	00 20B3 FFFF	256K	Boot ROM	Boot ROM	Boot ROM
00 20B4 0000	00 20BE FFFF	704K	Reserved	Reserved	Reserved
00 20BF 0000	00 20BF 01FF	64K	Reserved	Reserved	Reserved
00 20C0 0000	00 20FF FFFF	4M	Reserved	Reserved	Reserved
00 2100 0000	00 2100 03FF	1K	Reserved	Reserved	Reserved

Copyright © 2012–2017, Texas Instruments Incorporated

Table 8-1. Device Memory Map Summary for 66AK2Hxx (continued)

PHYSICAL 40-BIT ADDRESS		BYTES	ARM VIEW	DSP VIEW	SOC VIEW
START	END				
00 2100 0400	00 2100 05FF	512	SPI0	SPI0	SPI0
00 2100 0600	00 2100 07FF	512	SPI1	SPI1	SPI1
00 2100 0800	00 2100 09FF	512	SPI2	SPI2	SPI2
00 2100 0A00	00 2100 0AFF	256	EMIF Config	EMIF Config	EMIF Config
00 2100 0B00	00 2100 FFFF	62K-768	Reserved	Reserved	Reserved
00 2101 0000	00 2101 01FF	512	DDR3A EMIF Config	DDR3A EMIF Config	DDR3A EMIF Config
00 2101 0200	00 2101 07FF	2K-512	Reserved	Reserved	Reserved
00 2101 0800	00 2101 09FF	512	Reserved	Reserved	Reserved
00 2101 0A00	00 2101 0FFF	2K-512	Reserved	Reserved	Reserved
00 2101 1000	00 2101 FFFF	60K	Reserved	Reserved	Reserved
00 2102 0000	00 2103 FFFF	128K	DDR3B EMIF configuration	DDR3B EMIF configuration	DDR3B EMIF configuration
00 2104 0000	00 217F FFFF	4M-256K	Reserved	Reserved	Reserved
00 2140 0000	00 2140 00FF	256	HyperLink0 config	HyperLink0 config	HyperLink0 config
00 2140 0100	00 2140 01FF	256	HyperLink1 config	HyperLink1 config	HyperLink1 config
00 2140 0400	00 217F FFFF	4M-512	Reserved	Reserved	Reserved
00 2180 0000	00 2180 7FFF	32K	PCIe config	PCIe config	PCIe config
00 2180 8000	00 21BF FFFF	4M-32K	Reserved	Reserved	Reserved
00 21C0 0000	00 21FF FFFF	4M	Reserved	Reserved	Reserved
00 2200 0000	00 229F FFFF	10M	Reserved	Reserved	Reserved
00 22A0 0000	00 22A0 FFFF	64K	Reserved	Reserved	Reserved
00 22A1 0000	00 22AF FFFF	1M-64K	Reserved	Reserved	Reserved
00 22B0 0000	00 22B0 FFFF	64K	Reserved	Reserved	Reserved
00 22B1 0000	00 22BF FFFF	1M-64K	Reserved	Reserved	Reserved
00 22C0 0000	00 22C0 FFFF	64K	Reserved	Reserved	Reserved
00 22C1 0000	00 22CF FFFF	1M-64K	Reserved	Reserved	Reserved
00 22D0 0000	00 22D0 FFFF	64K	Reserved	Reserved	Reserved
00 22D1 0000	00 22DF FFFF	1M-64K	Reserved	Reserved	Reserved
00 22E0 0000	00 22E0 FFFF	64K	Reserved	Reserved	Reserved
00 22E1 0000	00 22EF FFFF	1M-64K	Reserved	Reserved	Reserved
00 22F0 0000	00 22F0 FFFF	64K	Reserved	Reserved	Reserved
00 22F1 0000	00 22FF FFFF	1M-64K	Reserved	Reserved	Reserved
00 2300 0000	00 2300 FFFF	64K	Reserved	Reserved	Reserved
00 2301 0000	00 230F FFFF	1M-64K	Reserved	Reserved	Reserved
00 2310 0000	00 2310 FFFF	64K	Reserved	Reserved	Reserved
00 2311 0000	00 231F FFFF	1M-64K	Reserved	Reserved	Reserved
00 2320 0000	00 2324 FFFF	384K	Reserved	Reserved	Reserved
00 2325 0000	00 239F FFFF	8M-384K	Reserved	Reserved	Reserved
00 23A0 0000	00 23BF FFFF	2M	Navigator	Navigator	Navigator
00 23C0 0000	00 23FF FFFF	4M	Reserved	Reserved	Reserved
00 2400 0000	00 27FF FFFF	64M	Reserved	Reserved	Reserved
00 2800 0000	00 2FFF FFFF	128M	HyperLink1 data	HyperLink1 data	HyperLink1 data
00 3000 0000	00 33FF FFFF	64M	EMIF16 CE0	EMIF16 CE0	EMIF16 CE0
00 3400 0000	00 37FF FFFF	64M	EMIF16 CE1	EMIF16 CE1	EMIF16 CE1
00 3800 0000	00 3BFF FFFF	64M	EMIF16 CE2	EMIF16 CE2	EMIF16 CE2
00 3C00 0000	00 3FFF FFFF	64M	EMIF16 CE3	EMIF16 CE3	EMIF16 CE3
00 4000 0000	00 4FFF FFFF	256M	HyperLink0 data	HyperLink0 data	HyperLink0 data
00 5000 0000	00 5FFF FFFF	256M	PCIe data	PCIe data	PCIe data

Copyright © 2012–2017, Texas Instruments Incorporated

Table 8-1. Device Memory Map Summary for 66AK2Hxx (continued)

PHYSICAL 40-BIT ADDRESS		BYTES	ARM VIEW	DSP VIEW	SOC VIEW
START	END				
00 6000 0000	00 7FFF FFFF	512M	DDR3B data(2)(3)	DDR3B data(4)	DDR3B data
00 8000 0000	00 FFFF FFFF	2G	DDR3A data/DDR3B data(2)(5)	DDR3B data	DDR3A data(6)
01 0000 0000	01 2100 FFFF	528M+64 K	Reserved	Reserved	Reserved
01 2101 0000	01 2101 01FF	512	DDR3A EMIF configuration(7)	DDR3A EMIF configuration(8)	DDR3A EMIF configuration(9)
01 2101 0200	07 FFFF FFFF	32G-512	Reserved	Reserved	Reserved
08 0000 0000	09 FFFF FFFF	8G	DDR3A data	DDR3A data(8)	DDR3A data(9)
0A 0000 0000	FF FFFF FFFF	984G	Reserved	Reserved	Reserved

(2) No IO coherency supported for this region (see the *KeyStone II Architecture ARM CorePac User's Guide*).
(3) This region is mapped to DDR3B. It is aliased of 00 8000 0000 to 00 9FFF FFFF (the first 512MB of DDR3B) if the state of DDR3A_REMAP_EN pin at boot time is '0'.
(4) This region is aliased of 00 8000 0000 to 00 9FFF FFFF (the first 512MB of DDR3B).
(5) This region is mapped to DDR3A or DDR3B depending on the state of DDR3A_REMAP_EN pin at boot time. If the pin is '1', this region is mapped to the first 2GB of DDR3A which is aliased of 08 0000 0000 to 08 7FFF FFFF. If the pin is '0', this region is mapped as 2GB of DDR3B.
(6) MPAX from SES port extends the address to this region.
(7) This region is aliased to 00 2101 0000-00 2101 01FF.
(8) Access to 40-bit address requires XMC MPAX programmation.
(9) Access to 40-bit address requires MSMC MPAX programmation. MPAX from SES port need to remap the region of 00 2101 0000-00 2101 01FF to this region.

8.2 Memory Protection Unit (MPU) for 66AK2Hxx

CFG (configuration) space of all slave devices on the TeraNet is protected by the MPU. The 66AK2Hxx contains 15 MPUs:

- MPU0 is used for main TeraNet_3P_B (SCR_3P (B)) CFG.
- MPU1/2/5 are used for QM_SS (one for VBUSM port and one each for the two configuration VBUSP ports).
- MPU3/4/6 are reserved.
- MPU7 is used for DDR3_B.
- MPU8 is used for EMIF16.
- MPU9 is used for interrupt controllers connected to TeraNet_3P (SCR_3P).
- MPU10 is used for semaphore.
- MPU11 is used to protect TeraNet_6P_B (SCR_6P (B)) CPU/6 CFG TeraNet.
- MPU12/13/14 are used for SPI0/1/2.

This section contains MPU register map and details of device-specific MPU registers only. For MPU features and details of generic MPU registers, see the *KeyStone Architecture Memory Protection Unit (MPU) User's Guide*.

Table 8-2, Table 8-3, and Table 8-4 show the configuration of each MPU and the memory regions protected by each MPU.

Table 8-2. MPU0-MPU5 Default Configuration

SETTING	MPU0 MAIN SCR_3P (B)	MPU1 (QM_SS DATA PORT)	MPU2 (QM_SS CFG1 PORT)	MPU3	MPU4	MPU5 (QM_SS CFG2 PORT)
Default permission	Assume allowed	Assume allowed	Assume allowed	Reserved	Reserved	Assume allowed
Number of allowed IDs supported	16	16	16			16
Number of programmable ranges supported	16	16	16			16
Compare width	1KB granularity	1KB granularity	1KB granularity			1KB granularity

Table 8-3. MPU6-MPU11 Default Configuration

SETTING	MPU6	MPU7 DDR3B	MPU8 EMIF16	MPU9 INTC	MPU10 SM	MPU11 SCR_6P (B)
Default permission	Reserved	Assume allowed	Assume allowed	Assume allowed	Assume allowed	Assume allowed
Number of allowed IDs supported		16	16	16	16	16
Number of programmable ranges supported		16	8	4	2	16
Compare width		1KB granularity	1KB granularity	1KB granularity	1KB granularity	1KB granularity

Table 8-4. MPU12-MPU14 Default Configuration

SETTING	MPU12 SPI0	MPU13 SPI1	MPU14 SPI2
Default permission	Assume allowed	Assume allowed	Assume allowed
Number of allowed IDs supported	16	16	16
Number of programmable ranges supported	2	2	2
Compare width	1KB granularity	1KB granularity	1KB granularity

Table 8-5. MPU Memory Regions

	MEMORY PROTECTION	START ADDRESS	END ADDRESS
MPU0	Main CFG SCR	0x01D0_0000	0x01E7_FFFF
MPU1	QM_SS DATA PORT	0x23A0_0000	0x23BF_FFFF
MPU2	QM_SS CFG1 PORT	0x02A0_0000	0x02AF_FFFF
MPU3	Reserved	0x027C_0000	0x027C_03FF
MPU4	Reserved	0x0210_0000	0x0215_FFFF
MPU5	QM_SS CFG2 PORT	0x02A0_4000	0x02BF_FFFF
MPU6	Reserved	0x02C0_0000	0x02CD_FFFF
MPU7	DDR3B	0x2101_0000	0xFFFF_FFFF
MPU8	SPIROM/EMIF16	0x20B0_0000	0x3FFF_FFFF
MPU9	INTC/AINTC	0x0264_0000	0x0264_07FF
MPU10	Semaphore	0x0260_0000	0x0260_9FFF
MPU11	SCR_6 and CPU/6 CFG SCR	0x0220_0000	0x03FF_FFFF
MPU12	SPI0	0x2100_0400	0x2100_07FF
MPU13	SPI1	0x2100_0400	0x2100_07FF
MPU14	SPI2	0x2100_0800	0x2100_0AFF

Copyright © 2012–2017, Texas Instruments Incorporated

Table 8-6 shows the unique Master ID assigned to each CorePac and peripherals on the device.

Table 8-6. Master ID Settings

MASTER ID	66AK2H12/14	66AK2H06
0	C66x CorePac0 Data	
1	C66x CorePac1 Data	
2	C66x CorePac2 Data	
3	C66x CorePac3 Data	
4	C66x CorePac4 Data	Reserved
5	C66x CorePac5 Data	Reserved
6	C66x CorePac6 Data	Reserved
7	C66x CorePac7 Data	Reserved
8	ARM CorePac 0 noncache accesses and cache accesses for all ARM cores	
9	ARM CorePac 1 noncache accesses	
10	ARM CorePac 2 noncache accesses	Reserved
11	ARM CorePac 3 noncache accesses	Reserved
12	Reserved	
13	Reserved	
14	Reserved	
15	Reserved	
16	C66x CorePac0 CFG	
17	C66x CorePac1 CFG	
18	C66x CorePac2 CFG	
19	C66x CorePac3 CFG	
20	C66x CorePac4 CFG	Reserved
21	C66x CorePac5 CFG	Reserved
22	C66x CorePac6 CFG	Reserved
23	C66x CorePac7 CFG	Reserved
24	Reserved	
25	EDMA0_TC0 read	
26	EDMA0_TC0 write	
27	EDMA0_TC1 read	
28	Hyperlink0	
29	Hyperlink1	
30	SRIO	
31	PCIE	
32	EDMA0_TC1 write	
33	EDMA1_TC0 read	
34	EDMA1_TC0 write	
35	EDMA1_TC1 read	
36	EDMA1_TC1write	
37	EDMA1_TC2 read	
38	EDMA1_TC2 write	
39	EDMA1_TC3 read	
40	EDMA1_TC3 write	
41	EDMA2_TC0 read	
42	EDMA2_TC0 write	
43	EDMA2_TC1 read	
44	EDMA2_TC1 write	

Copyright © 2012–2017, Texas Instruments Incorporated

Table 8-6. Master ID Settings (continued)

MASTER ID	66AK2H12/14	66AK2H06
45	EDMA2_TC2 read	
46	EDMA2_TC2 write	
47	EDMA2_TC3 read	
48	EDMA2_TC3 write	
49	EDMA3_TC0 read	
50	EDMA3_TC0 write	
51	EDMA3_TC1 read	
52	MSMC (1)	
53	EDMA3_TC1 write	
54 to 55	SRIO PKTDMA	
56	Reserved	
57	Reserved	
58	Reserved	
59	Reserved	
60	Reserved	
61	Reserved	
62	EDMA3CC0	
63	EDMA3CC1	
64	EDMA3CC2	
65	Reserved	
66	Reserved	
67	Reserved	
68 to 71	Queue Manager	
72 to 79	Reserved	
80	Reserved	
81	Reserved	
82	Reserved	
83	EDMA3_CC_TR	
84 to 87	10GbE (66AK2H14 only)	
88 to 91	Reserved	
92 to 95	Packet Coprocessor MST2	
96 to 99	Packet Coprocessor MST1	
100 to 101	Reserved	
102	Reserved	
103	Reserved	
104	Reserved	
105	Reserved	
106	Reserved	
107	DBG_DAP	
108-139	Reserved	
140	CPT_L2_0	
141	CPT_L2_1	
142	CPT_L2_2	
143	CPT_L2_3	
144	CPT_L2_4	
145	CPT_L2_5	

(1) The master ID for MSMC is for the transaction initiated by MSMC internally and sent to the DDR.

Copyright © 2012–2017, Texas Instruments Incorporated

Table 8-6. Master ID Settings (continued)

MASTER ID	66AK2H12/14	66AK2H06
146	CPT_L2_6	
147	CPT_L2_7	
148	CPT_MSMC0	
149	CPT_MSMC1	
150	CPT_MSMC2	
151	CPT_MSMC3	
152	CPT_DDR3A	
153	CPT_SM	
154	CPT_QM_CFG1	
155	CPT_QM_M	
156	CPT_CFG	
157	Reserved	
158	Reserved	
159	Reserved	
160	CPT_QM_CFG2	
161	CPT_DDR3B	
162	Reserved	
163	Reserved	
164	CPT_EDMA3CC0_4	
165	CPT_EDMA3CC1_2_3	
166	CPT_INTC	
167	CPT_SPI_ROM_EMIP16	
168	USB	
169	EDMA4_TC0 read	
170	EDMA4_TC0 write	
171	EDMA4_TC1 read	
172	EDMA4_TC1 write	
173	EDMA4_CC_TR	
174	CPT_MSMC5	
175	CPT_MSMC6	
176	CPT_MSMC7	
177	CPT_MSMC4	
178	Reserved	
179	Reserved	
180-183	NETCP	
184-255	Reserved	

NOTE

There are two master ID values assigned to the Queue Manager_second master port, one master ID for external linking RAM and the other one for the PDSP/MCDM accesses.

Table 8-7 shows the privilege ID of each C66x CorePac and every mastering peripheral. The table also shows the privilege level (supervisor vs. user), security level (secure vs. nonsecure), and access type (instruction read vs. data/DMA read or write) of each master on the device. In some cases, a particular setting depends on software being executed at the time of the access or the configuration of the master peripheral.

Copyright © 2012–2017, Texas Instruments Incorporated

Table 8-7. Privilege ID Settings

PRIVILEGE ID	MASTER	PRIVILEGE LEVEL	SECURITY LEVEL	ACCESS TYPE
0	C66x CorePac0	SW dependant, driven by MSMC	Nonsecure	DMA
1	C66x CorePac1	SW dependant, driven by MSMC	Nonsecure	DMA
2	C66x CorePac2	SW dependant, driven by MSMC	Nonsecure	DMA
3	C66x CorePac3	SW dependant, driven by MSMC	Nonsecure	DMA
4	C66x CorePac4	SW dependant, driven by MSMC	Nonsecure	DMA
5	C66x CorePac5	SW dependant, driven by MSMC	Nonsecure	DMA
6	C66x CorePac6	SW dependant, driven by MSMC	Nonsecure	DMA
7	C66x CorePac7	SW dependant, driven by MSMC	Nonsecure	DMA
8	ARM CorePac	SW dependent	Nonsecure	DMA
9	SRIO_M and all Packet DMA masters (NetCP, Both QM_CDMA, SRIO_CDMA, 10GbE(1)), USB	User/driven by SRIO block, user mode and supervisor mode is determined by per transaction basis. Only the transaction with source ID matching the value in SupervisorID register is granted supervisor mode.	Nonsecure	DMA
10	QM_Second(2)	User	Nonsecure	DMA
11	PCIe	Supervisor	Nonsecure	DMA
12	DAP	Driven by Emulation SW	Nonsecure	DMA
13	Reserved			
14	HyperLink	Supervisor	Nonsecure	DMA
15	Reserved			

(1) 66AK2H14 only.
(2) QM_Second provides a path that PDSP uses to access the system memory.

8.2.1 MPU Registers

This section includes the offsets for MPU registers and definitions for device-specific MPU registers. For Number of Programmable Ranges supported (PROGx_MPSA, PROGxMPEA) refer to the following tables.

8.2.1.1 MPU Register Map

Table 8-8. MPU Registers

OFFSET	NAME	DESCRIPTION
0h	REVID	Revision ID
4h	CONFIG	Configuration
10h	IRAWSTAT	Interrupt raw status/set
14h	IENSTAT	Interrupt enable status/clear
18h	IENSET	Interrupt enable
1Ch	IENCLR	Interrupt enable clear
20h	EOI	End of interrupt
200h	PROG0_MPSAR	Programmable range 0, start address
204h	PROG0_MPEAR	Programmable range 0, end address
208h	PROG0_MPPAR	Programmable range 0, memory page protection attributes
210h	PROG1_MPSAR	Programmable range 1, start address
214h	PROG1_MPEAR	Programmable range 1, end address
218h	PROG1_MPPAR	Programmable range 1, memory page protection attributes
220h	PROG2_MPSAR	Programmable range 2, start address
224h	PROG2_MPEAR	Programmable range 2, end address
228h	PROG2_MPPAR	Programmable range 2, memory page protection attributes
230h	PROG3_MPSAR	Programmable range 3, start address

Copyright © 2012–2017, Texas Instruments Incorporated

Table 8-8. MPU Registers (continued)

OFFSET	NAME	DESCRIPTION
234h	PROG3_MPEAR	Programmable range 3, end address
238h	PROG3_MPPAR	Programmable range 3, memory page protection attributes
240h	PROG4_MPSAR	Programmable range 4, start address
244h	PROG4_MPEAR	Programmable range 4, end address
248h	PROG4_MPPAR	Programmable range 4, memory page protection attributes
250h	PROG5_MPSAR	Programmable range 5, start address
254h	PROG5_MPEAR	Programmable range 5, end address
258h	PROG5_MPPAR	Programmable range 5, memory page protection attributes
260h	PROG6_MPSAR	Programmable range 6, start address
264h	PROG6_MPEAR	Programmable range 6, end address
268h	PROG6_MPPAR	Programmable range 6, memory page protection attributes
270h	PROG7_MPSAR	Programmable range 7, start address
274h	PROG7_MPEAR	Programmable range 7, end address
278h	PROG7_MPPAR	Programmable range 7, memory page protection attributes
280h	PROG8_MPSAR	Programmable range 8, start address
284h	PROG8_MPEAR	Programmable range 8, end address
288h	PROG8_MPPAR	Programmable range 8, memory page protection attributes
290h	PROG9_MPSAR	Programmable range 9, start address
294h	PROG9_MPEAR	Programmable range 9, end address
298h	PROG9_MPPAR	Programmable range 9, memory page protection attributes
2A0h	PROG10_MPSAR	Programmable range 10, start address
2A4h	PROG10_MPEAR	Programmable range 10, end address
2A8h	PROG10_MPPAR	Programmable range 10, memory page protection attributes
2B0h	PROG11_MPSAR	Programmable range 11, start address
2B4h	PROG11_MPEAR	Programmable range 11, end address
2B8h	PROG11_MPPAR	Programmable range 11, memory page protection attributes
2C0h	PROG12_MPSAR	Programmable range 12, start address
2C4h	PROG12_MPEAR	Programmable range 12, end address
2C8h	PROG12_MPPAR	Programmable range 12, memory page protection attributes
2D0h	PROG13_MPSAR	Programmable range 13, start address
2D4h	PROG13_MPEAR	Programmable range 13, end address
2Dh	PROG13_MPPAR	Programmable range 13, memory page protection attributes
2E0h	PROG14_MPSAR	Programmable range 14, start address
2E4h	PROG14_MPEAR	Programmable range 14, end address
2E8h	PROG14_MPPAR	Programmable range 14, memory page protection attributes
2F0h	PROG15_MPSAR	Programmable range 15, start address
2F4h	PROG15_MPEAR	Programmable range 15, end address
2F8h	PROG15_MPPAR	Programmable range 15, memory page protection attributes
300h	FLTADDRR	Fault address
304h	FLTSTAT	Fault status
308h	FLTCLR	Fault clear

Copyright © 2012–2017, Texas Instruments Incorporated

8.2.1.2 Device-Specific MPU Registers

8.2.1.2.1 Configuration Register (CONFIG)

The configuration register (CONFIG) contains the configuration value of the MPU as described in Table 8-9.

Table 8-9. Configuration Register Field Descriptions

Bits	Field	Description
31-24	ADDR_WIDTH	Address alignment for range checking • 0 = 1KB alignment • 6 = 64KB alignment
23-20	NUM_FIXED	Number of fixed address ranges
19-16	NUM_PROG	Number of programmable address ranges
15-12	NUM_AIDS	Number of supported AIDs
11-1	Reserved	Reserved. Always read as 0.
0	ASSUME_ALLOWED	Assume allowed bit. When an address is not covered by any MPU protection range, this bit determines whether the transfer is assumed to be allowed or not. • 0 = Assume disallowed • 1 = Assume allowed

8.2.2 MPU Programmable Range Registers

8.2.2.1 Programmable Range *n* Start Address Register (PROG*n*_MPSAR)

The Programmable Address Start Register holds the start address for the range. This register is writeable by a supervisor entity only. If NS = 0 (nonsecure mode) in the associated MPPAR register, then the register is also writeable only by a secure entity.

The start address must be aligned on a page boundary. The size of the page is 1KB. The size of the page determines the width of the address field in MPSAR and MPEAR. The PROG*n*_MPSAR register is shown in Figure 8-1 and described in Table 8-10. The reset values are listed in Table 8-11 for MPU0-MPU5, Table 8-12 for MPU6-MPU11, and Table 8-13 for MPU12-MPU14.

Figure 8-1. Programmable Range *n* Start Address Register (PROG*n*_MPSAR)

31	30	29	28	27	26	25	24	23	22	21	20	19	18	17	16	15	14	13	12	11	10	9	8	7	6	5	4	3	2	1	0
START_ADDR																						Reserved									
R/W																						R									

Legend: R = Read only; R/W = Read/Write

Table 8-10. Programmable Range *n* Start Address Register Field Descriptions

Bit	Field	Description
31-10	START_ADDR	Start address for range n
9-0	Reserved	Reserved. Always read as 0.

Table 8-11. MPU0-MPU5 Programmable Range *n* Start Address Register (PROG*n*_MPSAR) Reset Values

REGISTER	MPU0	MPU1	MPU2	MPU3	MPU4	MPU5
PROG0_MPSAR	0x01D0_0000	0x23A0_0000	0x02A0_0000	Reserved	Reserved	0x02A0_4000
PROG1_MPSAR	0x01F0_0000	0x23A0_2000	0x02A0_2000	Reserved	Reserved	0x02A0_5000
PROG2_MPSAR	0x02F0_0000	0x023A_6000	0x02A0_6000	Reserved	Reserved	0x02A0_6400
PROG3_MPSAR	0x0200_0000	0x23A0_6800	0x02A0_6800	Reserved	Reserved	0x02A0_7400
PROG4_MPSAR	0x020C_0000	0x23A0_7000	0x02A0_7000	Reserved	Reserved	0x02A0_A000
PROG5_MPSAR	0x021C_0000	0x23A0_8000	0x02A0_8000	Reserved	Reserved	0x02A0_D000
PROG6_MPSAR	0x021D_0000	0x23A0_C000	0x02A0_C000	Reserved	Reserved	0x02A0_E000

Copyright © 2012–2017, Texas Instruments Incorporated

Table 8-11. MPU0-MPU5 Programmable Range *n* Start Address Register (PROG*n*_MPSAR) Reset Values (continued)

REGISTER	MPU0	MPU1	MPU2	MPU3	MPU4	MPU5
PROG7_MPSAR	0x021F_0000	0x23A0_E000	0x02A0_E000	Reserved	Reserved	0x02A0_F000
PROG8_MPSAR	0x0234_0000	0x23A0_F000	0x02A0_F000	Reserved	Reserved	0x02A0_F800
PROG9_MPSAR	0x0254_0000	0x23A0_F800	0x02A0_F800	Reserved	Reserved	0x02A1_2000
PROG10_MPSAR	0x0258_0000	0x23A1_0000	0x02A1_0000	Reserved	Reserved	0x02A1_C000
PROG11_MPSAR	0x0000_0000	0x23A1_C000	0x02A2_0000	Reserved	Reserved	0x02A2_8000
PROG12_MPSAR	0x0290_0000	0x23A4_0000	0x02A4_0000	Reserved	Reserved	0x02A6_0000
PROG13_MPSAR	0x01E8_0000	0x23A8_0000	0x02A8_0000	Reserved	Reserved	0x02AA_0000
PROG14_MPSAR	0x01E8_0800	0x23B0_0000	0x02AC_0000	Reserved	Reserved	0x02B0_0000
PROG15_MPSAR	0x01E0_0000	0x23B8_0000	0x02AE_0000	Reserved	Reserved	0x02B8_0000

Table 8-12. MPU6-MPU11 Programmable Range *n* Start Address Register (PROG*n*_MPSAR) Reset Values

REGISTER	MPU6	MPU7	MPU8	MPU9	MPU10	MPU11
PROG0_MPSAR	Reserved	0x2101_0000	0x3000_0000	0x0260_0000	0x0264_0000	0x0220_0000
PROG1_MPSAR	Reserved	0x0000_0000	0x3200_0000	0x0260_4000	0x0000_0000	0x0231_0000
PROG2_MPSAR	Reserved	0x0800_0000	0x3400_0000	0x0260_8000	N/A	0x0231_A000
PROG3_MPSAR	Reserved	0x1000_0000	0x3600_0000	0x0256_0000	N/A	0x0233_0000
PROG4_MPSAR	Reserved	0x1800_0000	0x3800_0000	0x0000_0000	N/A	0x0235_0000
PROG5_MPSAR	Reserved	0x2000_0000	0x3A00_0000	0x0000_0000	N/A	0x0263_0000
PROG6_MPSAR	Reserved	0x2800_0000	0x3C00_0000	0x0000_0000	N/A	0x0244_0000
PROG7_MPSAR	Reserved	0x3000_0000	0x2100_0800	0x0000_0000	N/A	0x024C_0000
PROG8_MPSAR	Reserved	0x3800_0000	N/A	0x0000_0000	N/A	0x0250_0000
PROG9_MPSAR	Reserved	0x4000_0000	N/A	0x0000_0000	N/A	0x0253_0000
PROG10_MPSAR	Reserved	0x4800_0000	N/A	0x0000_0000	N/A	0x0253_0C00
PROG11_MPSAR	Reserved	0x5000_0000	N/A	0x0000_0000	N/A	0x0260_B000
PROG12_MPSAR	Reserved	0x5800_0000	N/A	0x0000_0000	N/A	0x0262_0000
PROG13_MPSAR	Reserved	0x6000_0000	N/A	0x0000_0000	N/A	0x0300_0000
PROG14_MPSAR	Reserved	0x6800_0000	N/A	0x0000_0000	N/A	0x021E_0000
PROG15_MPSAR	Reserved	0x7000_0000	N/A	0x0000_0000	N/A	0x0268_0000

Table 8-13. MPU12-MPU14 Programmable Range *n* Start Address Register (PROG*n*_MPSAR) Reset Values

REGISTER	MPU12	MPU13	MPU14
PROG0_MPSAR	0x2100_0400	0x2100_0400	0x2100_0800
PROG1_MPSAR	0x0000_0000	0x0000_0000	0x0000_0000
PROG2_MPSAR	N/A	N/A	N/A
PROG3_MPSAR	N/A	N/A	N/A
PROG4_MPSAR	N/A	N/A	N/A
PROG5_MPSAR	N/A	N/A	N/A
PROG6_MPSAR	N/A	N/A	N/A
PROG7_MPSAR	N/A	N/A	N/A
PROG8_MPSAR	N/A	N/A	N/A
PROG9_MPSAR	N/A	N/A	N/A
PROG10_MPSAR	N/A	N/A	N/A
PROG11_MPSAR	N/A	N/A	N/A
PROG12_MPSAR	N/A	N/A	N/A
PROG13_MPSAR	N/A	N/A	N/A

Copyright © 2012–2017, Texas Instruments Incorporated

Table 8-13. MPU12-MPU14 Programmable Range *n* Start Address Register (PROG*n*_MPSAR) Reset Values (continued)

REGISTER	MPU12	MPU13	MPU14
PROG14_MPSAR	N/A	N/A	N/A
PROG15_MPSAR	N/A	N/A	N/A

8.2.2.2 Programmable Range *n* - End Address Register (PROG*n*_MPEAR)

The programmable address end register holds the end address for the range. This register is writeable by a supervisor entity only. If NS = 0 (nonsecure mode) in the associated MPPAR register then the register is also writeable only by a secure entity.

The end address must be aligned on a page boundary. The size of the page depends on the MPU number. The page size for MPU1 is 1KB and for MPU2 it is 64KB. The size of the page determines the width of the address field in MPSAR and MPEAR. The PROG*n*_MPEAR register is shown in Figure 8-2 and described in Table 8-14. The reset values are listed in Table 8-15 for MPU0-MPU5, Table 8-16 for MPU6-MPU11, and Table 8-17 for MPU12-MPU14.

Figure 8-2. Programmable Range *n* End Address Register (PROG*n*_MPEAR)

31	30	29	28	27	26	25	24	23	22	21	20	19	18	17	16	15	14	13	12	11	10	9	8	7	6	5	4	3	2	1	0
END_ADDR																						Reserved									
R/W																						R									

Legend: R = Read only; R/W = Read/Write

Table 8-14. Programmable Range *n* End Address Register Field Descriptions

Bit	Field	Description
31-10	END_ADDR	End address for range n
9-0	Reserved	Reserved. Always read as 3FFh.

Table 8-15. MPU0-MPU5 Programmable Range *n* End Address Register (PROG*n*_MPEAR) Reset Values

REGISTER	MPU0	MPU1	MPU2	MPU3	MPU4	MPU5
PROG0_MPEAR	0x01DF_FFFF	0x23A0_1FFF	0x02A0_00FF	Reserved	Reserved	0x02A0_4FFF
PROG1_MPEAR	0x01F7_FFFF	0x23A0_5FFF	0x02A0_3FFF	Reserved	Reserved	0x02A0_5FFF
PROG2_MPEAR	0x02FF_FFFF	0x23A0_67FF	0x02A0_63FF	Reserved	Reserved	0x02A0_67FF
PROG3_MPEAR	0x020B_FFFF	0x23A0_6FFF	0x02A0_6FFF	Reserved	Reserved	0x02A0_7FFF
PROG4_MPEAR	0x020F_FFFF	0x23A0_7FFF	0x02A0_73FF	Reserved	Reserved	0x02A0_BFFF
PROG5_MPEAR	0x021C_83FF	0x23A0_BFFF	0x02A0_9FFF	Reserved	Reserved	0x02A0_DFFF
PROG6_MPEAR	0x021D_C0FF	0x23A0_DFFF	0x02A0_CFFF	Reserved	Reserved	0x02A0_E7FF
PROG7_MPEAR	0x021F_C7FF	0x23A0_EFFF	0x02A0_E7FF	Reserved	Reserved	0x02A0_F7FF
PROG8_MPEAR	0x0234_C0FF	0x23A0_F7FF	0x02A0_F7FF	Reserved	Reserved	0x02A0_FFFF
PROG9_MPEAR	0x0255_FFFF	0x23A0_FFFF	0x02A0_FFFF	Reserved	Reserved	0x02A1_7FFF
PROG10_MPEAR	0x025F_FFFF	0x23A1_BFFF	0x02A1_1FFF	Reserved	Reserved	0x02A1_FFFF
PROG11_MPEAR	0x0000_0000	0x23A3_FFFF	0x02A2_5FFF	Reserved	Reserved	0x02A3_FFFF
PROG12_MPEAR	0x029F_FFFF	0x23A7_FFFF	0x02A5_FFFF	Reserved	Reserved	0x02A7_FFFF
PROG13_MPEAR	0x01E8_07FF	0x23AF_FFFF	0x02A9_FFFF	Reserved	Reserved	0x02AB_FFFF
PROG14_MPEAR	0x01E8_43FF	0x23B7_FFFF	0x02AD_FFFF	Reserved	Reserved	0x02B7_FFFF
PROG15_MPEAR	0x01E7_FFFF	0x23BF_FFFF	0x02AF_FFFF	Reserved	Reserved	0x02BF_FFFF

Copyright © 2012–2017, Texas Instruments Incorporated

Table 8-16. MPU6-MPU11 Programmable Range *n* End Address Register (PROG*n*_MPEAR) Reset Values

REGISTER	MPU6	MPU7	MPU8	MPU9	MPU10	MPU11
PROG0_MPEAR	Reserved	0x2103_FFFF	0x31FF_FFFF	0x0260_1FFF	0x0264_07FF	0x022F_027F
PROG1_MPEAR	Reserved	0x07FF_FFFF	0x33FF_FFFF	0x0260_5FFF	0x0000_0000	0x0231_01FF
PROG2_MPEAR	Reserved	0x0FFF_FFFF	0x35FF_FFFF	0x0260_9FFF	N/A	0x0232_FFFF
PROG3_MPEAR	Reserved	0x17FF_FFFF	0x37FF_FFFF	0x0257_FFFF	N/A	0x0233_07FF
PROG4_MPEAR	Reserved	0x1FFF_FFFF	0x39FF_FFFF	Reserved	N/A	0x0235_0FFF
PROG5_MPEAR	Reserved	0x27FF_FFFF	0x3BFF_FFFF	Reserved	N/A	0x0263_FFFF
PROG6_MPEAR	Reserved	0x2FFF_FFFF	0x3FFF_FFFF	Reserved	N/A	0x024B_3FFF
PROG7_MPEAR	Reserved	0x37FF_FFFF	0x2100_0AFF	Reserved	N/A	0x024C_0BFF
PROG8_MPEAR	Reserved	0x3FFF_FFFF	N/A	Reserved	N/A	0x0250_7FFF
PROG9_MPEAR	Reserved	0x47FF_FFFF	N/A	Reserved	N/A	0x0253_0BFF
PROG10_MPEAR	Reserved	0x4FFF_FFFF	N/A	Reserved	N/A	0x0253_FFFF
PROG11_MPEAR	Reserved	0x57FF_FFFF	N/A	Reserved	N/A	0x0260_BFFF
PROG12_MPEAR	Reserved	0x5FFF_FFFF	N/A	Reserved	N/A	0x0262_0FFF
PROG13_MPEAR	Reserved	0x67FF_FFFF	N/A	Reserved	N/A	0x03FF_FFFF
PROG14_MPEAR	Reserved	0x6FFF_FFFF	N/A	Reserved	N/A	0x021E_1FFF
PROG15_MPEAR	Reserved	0x7FFF_FFFF	N/A	Reserved	N/A	0x026F_FFFF

Table 8-17. MPU12-MPU14 Programmable Range *n* End Address Register (PROG*n*_MPEAR) Reset Values

REGISTER	MPU12	MPU13	MPU14
PROG0_MPEAR	0x2100_07FF	0x2100_07FF	0x2100_0AFF
PROG1_MPEAR	0x0000_0000	0x0000_0000	0x0000_0000
PROG2_MPEAR	N/A	N/A	N/A
PROG3_MPEAR	N/A	N/A	N/A
PROG4_MPEAR	N/A	N/A	N/A
PROG5_MPEAR	N/A	N/A	N/A
PROG6_MPEAR	N/A	N/A	N/A
PROG7_MPEAR	N/A	N/A	N/A
PROG8_MPEAR	N/A	N/A	N/A
PROG9_MPEAR	N/A	N/A	N/A
PROG10_MPEAR	N/A	N/A	N/A
PROG11_MPEAR	N/A	N/A	N/A
PROG12_MPEAR	N/A	N/A	N/A
PROG13_MPEAR	N/A	N/A	N/A
PROG14_MPEAR	N/A	N/A	N/A
PROG15_MPEAR	N/A	N/A	N/A

8.2.2.3 Programmable Range *n* Memory Protection Page Attribute Register (PROG*n*_MPPAR)

The programmable address memory protection page attribute register holds the permissions for the region. This register is writeable only by a nondebug supervisor entity. If NS = 0 (secure mode) then the register is also writeable only by a nondebug secure entity. The NS bit is writeable only by a nondebug secure entity. For debug accesses, the register is writeable only when NS = 1 or EMU = 1. The PROG*n*_MPPAR register is shown in Figure 8-3 and described in Table 8-18. The reset values are listed in Table 8-19 for MPU0-MPU5, Table 8-20 for MPU6-MPU11, and Table 8-21 for MPU12-MPU14.

Figure 8-3. Programmable Range *n* Memory Protection Page Attribute Register (PROG*n*_MPPAR)

31	30	29	28	27	26	25	24	23	22	21	20	19	18	17	16
Reserved						AID15	AID14	AID13	AID12	AID11	AID10	AID9	AID8	AID7	AID6
R						R/W	R/W	R/W	R/W	R/W	R/W	R/W	R/W	R/W	R/W
15	14	13	12	11	10	9	8	7	6	5	4	3	2	1	0
AID5	AID4	AID3	AID2	AID1	AID0	AIDX	Rsvd	NS	EMU	SR	SW	SX	UR	UW	UX
R/W	R/W	R/W	R/W	R/W	R/W	R/W	R	R/W	R/W	R/W	R/W	R/W	R/W	R/W	R/W

Table 8-18. Programmable Range *n* Memory Protection Page Attribute Register Field Descriptions

Bits	Name	Description
31-26	Reserved	Reserved. Always read as 0.
25	AID15	Controls access from ID = 15 • 0 = Access is not checked for permissions • 1 = Access is checked for permissions
24	AID14	Controls access from ID = 14 • 0 = Access is not checked for permissions • 1 = Access is checked for permissions
23	AID13	Controls access from ID = 13 • 0 = Access is not checked for permissions • 1 = Access is checked for permissions
22	AID12	Controls access from ID = 12 • 0 = Access is not checked for permissions • 1 = Access is checked for permissions
21	AID11	Controls access from ID = 11 • 0 = Access is not checked for permissions • 1 = Access is checked for permissions
20	AID10	Controls access from ID = 10 • 0 = Access is not checked for permissions • 1 = Access is checked for permissions
19	AID9	Controls access from ID = 9 • 0 = Access is not checked for permissions • 1 = Access is checked for permissions
18	AID8	Controls access from ID = 8 • 0 = Access is not checked for permissions • 1 = Access is checked for permissions
17	AID7	Controls access from ID = 7 • 0 = Access is not checked for permissions • 1 = Access is checked for permissions
16	AID6	Controls access from ID = 6 • 0 = Access is not checked for permissions • 1 = Access is checked for permissions
15	AID5	Controls access from ID = 5 • 0 = Access is not checked for permissions • 1 = Access is checked for permissions
14	AID4	Controls access from ID = 4 • 0 = Access is not checked for permissions • 1 = Access is checked for permissions
13	AID3	Controls access from ID = 3 • 0 = Access is not checked for permissions • 1 = Access is checked for permissions
12	AID2	Controls access from ID = 2 • 0 = Access is not checked for permissions • 1 = Access is checked for permissions

Copyright © 2012–2017, Texas Instruments Incorporated

Table 8-18. Programmable Range *n* Memory Protection Page Attribute Register Field Descriptions (continued)

Bits	Name	Description
11	AID1	Controls access from ID = 1 • 0 = Access is not checked for permissions • 1 = Access is checked for permissions
10	AID0	Controls access from ID = 0 • 0 = Access is not checked for permissions • 1 = Access is checked for permissions
9	AIDX	Controls access from ID > 15 • 0 = Access is not checked for permissions • 1 = Access is checked for permissions
8	Reserved	Reserved. Always reads as 0.
7	NS	Nonsecure access permission • 0 = Only secure access allowed • 1 = Nonsecure access allowed
6	EMU	Emulation (debug) access permission. This bit is ignored if NS = 1 • 0 = Debug access not allowed • 1 = Debug access allowed
5	SR	Supervisor Read permission • 0 = Access not allowed • 1 = Access allowed
4	SW	Supervisor Write permission • 0 = Access not allowed • 1 = Access allowed
3	SX	Supervisor Execute permission • 0 = Access not allowed • 1 = Access allowed
2	UR	User Read permission • 0 = Access not allowed • 1 = Access allowed
1	UW	User Write permission • 0 = Access not allowed • 1 = Access allowed
0	UX	User Execute permission • 0 = Access not allowed • 1 = Access allowed

Table 8-19. MPU0-MPU5 Programmable Range *n* Memory Protection Page Attribute Register (PROG*n*_MPPAR) Reset Values

Register	MPU0	MPU1	MPU2	MPU3	MPU4	MPU5
PROG0_MPPAR	0x03FF_FCB6	0x03FF_FCB6	0x03FF_FCB6	Reserved	Reserved	0x03FF_FCB4
PROG1_MPPAR	0x03FF_FCB6	0x03FF_FCB4	0x03FF_FCB4	Reserved	Reserved	0x03FF_FCB4
PROG2_MPPAR	0x03FF_FCB6	0x03FF_FCA4	0x03FF_FCA4	Reserved	Reserved	0x03FF_FCA4
PROG3_MPPAR	0x03FF_FCB6	0x03FF_FCB4	0x03FF_FCB4	Reserved	Reserved	0x03FF_FCF4
PROG4_MPPAR	0x03FF_FCB6	0x03FF_FCF4	0x03FF_FCF4	Reserved	Reserved	0x03FF_FCB4
PROG5_MPPAR	0x03FF_FCB6	0x03FF_FCB4	0x03FF_FCB4	Reserved	Reserved	0x03FF_FCB4
PROG6_MPPAR	0x03FF_FCB6	0x03FF_FCB4	0x03FF_FCB4	Reserved	Reserved	0x03FF_FCB4
PROG7_MPPAR	0x03FF_FCB6	0x03FF_FCB4	0x03FF_FCB4	Reserved	Reserved	0x03FF_FCB4
PROG8_MPPAR	0x03FF_FCB6	0x03FF_FCB4	0x03FF_FCB4	Reserved	Reserved	0x03FF_FCF4
PROG9_MPPAR	0x03FF_FCB6	0x03FF_FCF4	0x03FF_FCF4	Reserved	Reserved	0x03FF_FCB4
PROG10_MPPAR	0x03FF_FCB6	0x03FF_FCB4	0x03FF_FCB4	Reserved	Reserved	0x03FF_FCF4

Copyright © 2012–2017, Texas Instruments Incorporated

Table 8-19. MPU0-MPU5 Programmable Range *n* Memory Protection Page Attribute Register (PROG*n*_MPPAR) Reset Values (continued)

Register	MPU0	MPU1	MPU2	MPU3	MPU4	MPU5
PROG11_MPPAR	0x03FF_FCB6	0x03FF_FCF4	0x03FF_FCF4	Reserved	Reserved	0x03FF_FCF4
PROG12_MPPAR	0x03FF_FCB4	0x03FF_FCA4	0x03FF_FCA4	Reserved	Reserved	0x03FF_FCA4
PROG13_MPPAR	0x03FF_FCB6	0x03FF_FCB6	0x03FF_FCB6	Reserved	Reserved	0x03FF_FCB6
PROG14_MPPAR	0x03FF_FCB0	0x03FF_FCA4	0x03FF_FCB6	Reserved	Reserved	0x03FF_FCA4
PROG15_MPPAR	0x03FF_FCB6	0x03FF_FCA4	0x03FF_FCB6	Reserved	Reserved	0x03FF_FCA4

Table 8-20. MPU6-MPU11 Programmable Range *n* Memory Protection Page Attribute Register (PROG*n*_MPPAR) Reset Values

Register	MPU6	MPU7	MPU8	MPU9	MPU10	MPU11
PROG0_MPPAR	Reserved	0x03FF_FCB6	0x03FF_FCBF	0x03FF_FCB6	0x03FF_FCB6	0x03FF_FCB6
PROG1_MPPAR	Reserved	0x03FF_FCBF	0x03FF_FCBF	0x03FF_FCB6	0x03FF_FCB6	0x03FF_FCB0
PROG2_MPPAR	Reserved	0x03FF_FCBF	0x03FF_FCBF	0x03FF_FCB6	N/A	0x03FF_FCB6
PROG3_MPPAR	Reserved	0x03FF_FCBF	0x03FF_FCBF	0x03FF_FCB6	N/A	0x03FF_FCB0
PROG4_MPPAR	Reserved	0x03FF_FCBF	0x03FF_FCBF	0x03FF_FCB6	N/A	0x03FF_FCB0
PROG5_MPPAR	Reserved	0x03FF_FCBF	0x03FF_FCBF	0x03FF_FCB6	N/A	0x03FF_FCB6
PROG6_MPPAR	Reserved	0x03FF_FCBF	0x03FF_FCBF	0x03FF_FCB6	N/A	0x03FF_FCB6
PROG7_MPPAR	Reserved	0x03FF_FCBF	0x03FF_FCB6	0x03FF_FCB6	N/A	0x03FF_FCB0
PROG8_MPPAR	Reserved	0x03FF_FCBF	N/A	0x03FF_FCB6	N/A	0x03FF_FCB0
PROG9_MPPAR	Reserved	0x03FF_FCBF	N/A	0x03FF_FCB6	N/A	0x03FF_FCB6
PROG10_MPPAR	Reserved	0x03FF_FCBF	N/A	0x03FF_FCB6	N/A	0x03FF_FCB6
PROG11_MPPAR	Reserved	0x03FF_FCBF	N/A	0x03FF_FCB6	N/A	0x03FF_FCB6
PROG12_MPPAR	Reserved	0x03FF_FCBF	N/A	0x03FF_FCB6	N/A	0x03FF_FCB0
PROG13_MPPAR	Reserved	0x03FF_FCBF	N/A	0x03FF_FCB6	N/A	0x03FF_FCB6
PROG14_MPPAR	Reserved	0x03FF_FCBF	N/A	0x03FF_FCB6	N/A	0x03FF_FCB0
PROG15_MPPAR	Reserved	0x03FF_FCBF	N/A	0x03FF_FCB6	N/A	0x03FF_FCB6

Table 8-21. MPU12-MPU14 Programmable Range *n* Memory Protection Page Attribute Register (PROG*n*_MPPAR) Reset Values

Register	MPU12	MPU13	MPU14
PROG0_MPPAR	0x03FF_FCBF	0x03FF_FCBF	0x03FF_FCBF
PROG1_MPPAR	0x03FF_FCBF	0x03FF_FCBF	0x03FF_FCBF
PROG2_MPPAR	0x0000_0000	0x0000_0000	0x0000_0000
PROG3_MPPAR	N/A	N/A	N/A
PROG4_MPPAR	N/A	N/A	N/A
PROG5_MPPAR	N/A	N/A	N/A
PROG6_MPPAR	N/A	N/A	N/A
PROG7_MPPAR	N/A	N/A	N/A
PROG8_MPPAR	N/A	N/A	N/A
PROG9_MPPAR	N/A	N/A	N/A
PROG10_MPPAR	N/A	N/A	N/A
PROG11_MPPAR	N/A	N/A	N/A
PROG12_MPPAR	N/A	N/A	N/A
PROG13_MPPAR	N/A	N/A	N/A
PROG14_MPPAR	N/A	N/A	N/A
PROG15_MPPAR	N/A	N/A	N/A

Copyright © 2012–2017, Texas Instruments Incorporated

8.3 Interrupts for 66AK2Hxx

This section discusses the interrupt sources, controller, and topology. Also provided are tables describing the interrupt events.

8.3.1 Interrupt Sources and Interrupt Controller

The CPU interrupts on the 66AK2Hxx device are configured through the C66x CorePac Interrupt Controller. The Interrupt Controller allows for up to 128 system events to be programmed to any of the 12 CPU interrupt inputs (CPUINT4 - CPUINT15), the CPU exception input (EXCEP), or the advanced emulation logic. The 128 system events consist of both internally-generated events (within the CorePac) and chip-level events.

Additional system events are routed to each of the C66x CorePacs to provide chip-level events that are not required as CPU interrupts/exceptions to be routed to the Interrupt Controller as emulation events. In addition, error-class events or infrequently used events are also routed through the system event router to offload the C66x CorePac interrupt selector. This is accomplished through the CorePac Interrupt Controller blocks, CIC[2:0]. This is clocked using CPU/6.

The event controllers consist of simple combination logic to provide additional events to each C66x CorePac, ARM GIC (ARM Generic Interrupt Controller) plus the EDMA3CC. CIC0 has 104 event outputs which provides 20 broadcast events and 18 additional events to each of the C66x CorePacs, 0 through 3. Similarly, CIC1 has 104 event outputs which provides 20 broadcast events and 18 additional events to each of the C66x CorePacs, 4 through 7 (66AK2H12/14 only). CIC2 has 103 event outputs which provides 8, 20, 8, 8, 8, and 16 events to EDMA3CC0, EDMA3CC1, EDMA3C2, EDMA3CC3, EDMA3CC4, and HyperLinks respectively.

The events that are routed to the C66x CorePacs for Advanced Event Triggering (AET) purposes from those EDMA3CC and FSYNC events that are not otherwise provided to each C66x CorePac.

Modules such as CP_MPU, BOOT_CFG, and CP_Tracer have level interrupts and EOI handshaking interface. The EOI value is 0 for CP_MPU, BOOT_CFG, and CP_Tracer.

Figure 8-4 and Figure 8-5 show the 66AK2Hxx interrupt topologies.

Copyright © 2012–2017, Texas Instruments Incorporated

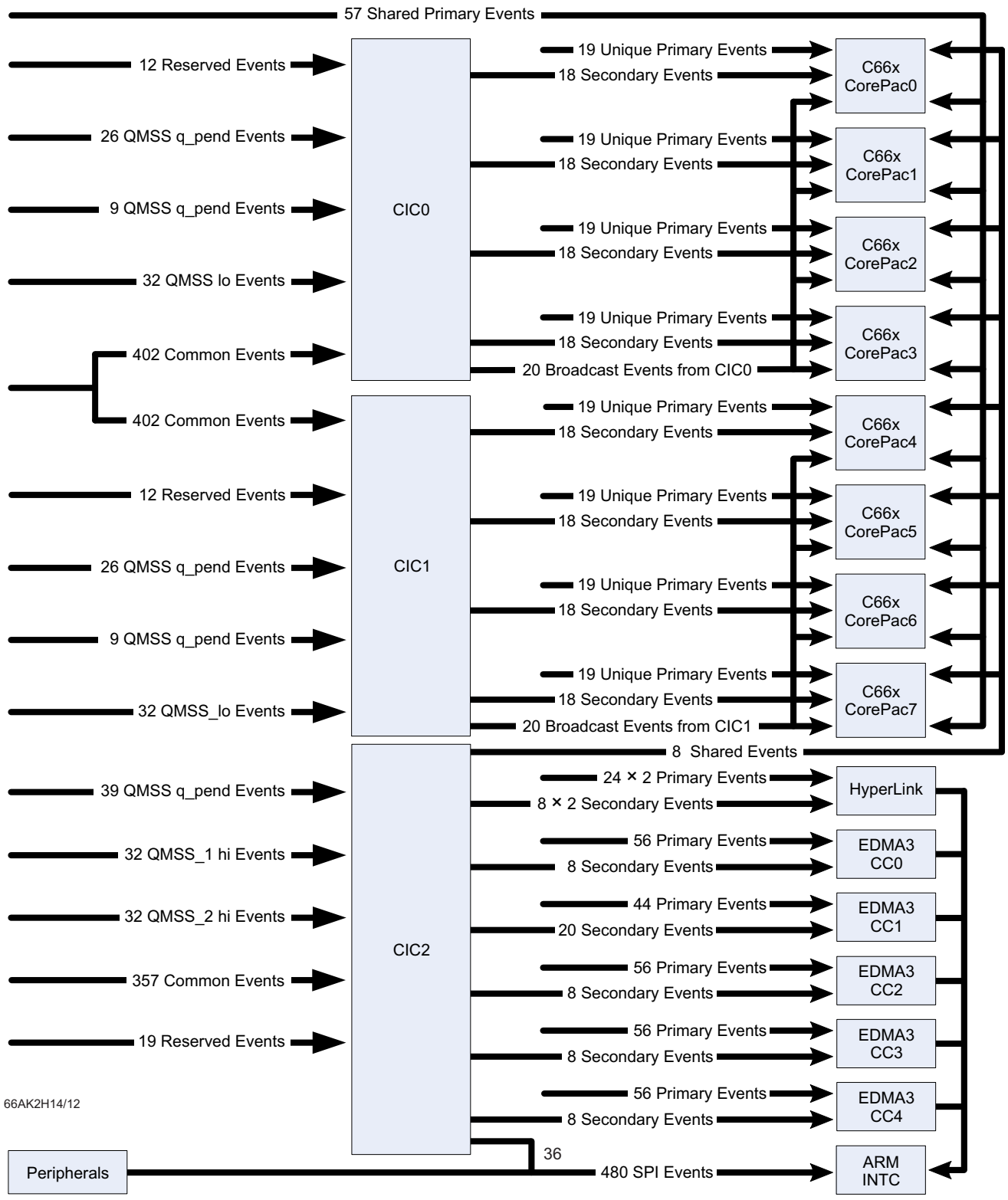

Figure 8-4. 66AK2H14/12 Interrupt Topology

Copyright © 2012–2017, Texas Instruments Incorporated

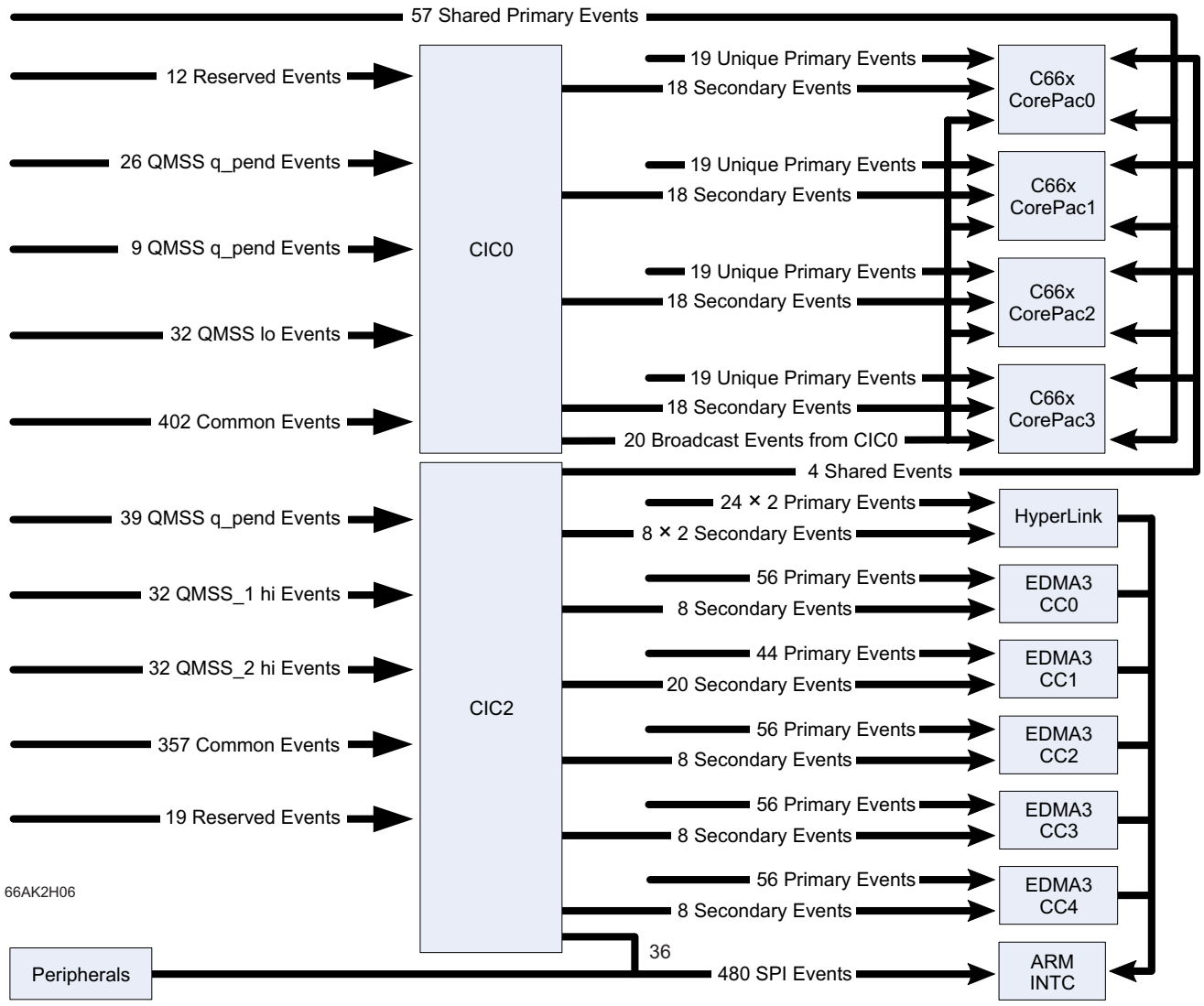

Figure 8-5. 66AK2H06 Interrupt Topology

Table 8-22 shows the mapping of primary events to C66x Corepac.

Table 8-22. System Event Mapping — C66x CorePac Primary Interrupts

EVENT NO.	EVENT NAME	DESCRIPTION
0	EVT0	Event combiner 0 output
1	EVT1	Event combiner 1 output
2	EVT2	Event combiner 2 output
3	EVT3	Event combiner 3 output
4	TETB_HFULLINTN	TETB is half full
5	TETB_FULLINTN	TETB is full
6	TETB_ACQINTN	TETB Acquisition complete interrupt
7	TETB_OVFLINTN	TETB Overflow condition interrupt
8	TETB_UNFLINTN	TETB Underflow condition interrupt
9	EMU_DTDMA	Emulation interrupt for host scan, DTDMA transfer complete and AET

Copyright © 2012–2017, Texas Instruments Incorporated

Table 8-22. System Event Mapping — C66x CorePac Primary Interrupts (continued)

EVENT NO.	EVENT NAME	DESCRIPTION
10	MSMC_MPF_ERRORN	Memory protection fault indicators for system master PrivID = 0 (C66x CorePac)
11	Reserved	Reserved
12	Reserved	Reserved
13	IDMA0	IDMA channel 0 interrupt
14	IDMA1	IDMA channel 1 interrupt
15	SEM_ERRN	Semaphore error interrupt
16	SEM_INTN	Semaphore interrupt
17	PCIE_INT4_PLUS_N	PCIE0 MSI interrupt
18	Reserved	Reserved
19	Reserved	Reserved
20	SRIO_INTDST16_PLUS_N	SRIO interrupt
21	Reserved	Reserved
22	Reserved	Reserved
23	CIC_OUT35	CIC Interrupt Controller output(1)
24	CIC_2_OUT102	CIC Interrupt Controller output
25	CIC_2_OUT94_PLUS_N(2)	CIC Interrupt Controller output
26	CIC_OUT68_PLUS_10_MUL_N(2)	CIC Interrupt Controller output(1)
27	CIC_OUT69_PLUS_10_MUL_N(2)	CIC Interrupt Controller output(1)
28	CIC_OUT70_PLUS_10_MUL_N(2)	CIC Interrupt Controller output(1)
29	CIC_OUT71_PLUS_10_MUL_N(2)	CIC Interrupt Controller output(1)
30	CIC_OUT72_PLUS_10_MUL_N(2)	CIC Interrupt Controller output(1)
31	CIC_OUT73_PLUS_10_MUL_N(2)	CIC Interrupt Controller output(1)
32	CIC_OUT16	CIC Interrupt Controller output(1)
33	CIC_OUT17	CIC Interrupt Controller output(1)
34	CIC_OUT18	CIC Interrupt Controller output(1)
35	CIC_OUT19	CIC Interrupt Controller output(1)
36	CIC_OUT20	CIC Interrupt Controller output(1)
37	CIC_OUT21	CIC Interrupt Controller output(1)
38	CIC_OUT22	CIC Interrupt Controller output(1)
39	CIC_OUT23	CIC Interrupt Controller output(1)
40	CIC_OUT32	CIC Interrupt Controller output(1)
41	CIC_OUT33	CIC Interrupt Controller output(1)
42	CIC_OUT13_PLUS_16_MUL_N(2)	CIC Interrupt Controller output(1)
43	CIC_OUT14_PLUS_16_MUL_N(2)	CIC Interrupt Controller output(1)
44	CIC_OUT15_PLUS_16_MUL_N(2)	CIC Interrupt Controller output(1)
45	CIC_OUT64_PLUS_10_MUL_N(2)	CIC Interrupt Controller output(1)
46	CIC_OUT65_PLUS_10_MUL_N(2)	CIC Interrupt Controller output(1)
47	CIC_OUT66_PLUS_10_MUL_N(2)	CIC Interrupt Controller output(1)
48	QMSS_INTD_1_HIGH_N(2)	Navigator 1 accumulated hi-priority interrupt 0
49	QMSS_INTD_1_HIGH_8_PLUS_N(2)	Navigator 1 accumulated hi-priority interrupt 8
50	QMSS_INTD_1_HIGH_16_PLUS_N(2)	Navigator 1 accumulated hi-priority interrupt 16
51	QMSS_INTD_1_HIGH_24_PLUS_N(2)	Navigator 1 accumulated hi-priority interrupt 24
52	QMSS_INTD_2_HIGH_N(2)	Navigator 2 accumulated hi-priority interrupt 0
53	QMSS_INTD_2_HIGH_8_PLUS_N(2)	Navigator 2 accumulated hi-priority interrupt 8

(1) For C66x CorePac[0-3], this generic primary interrupt comes from CIC0 and for C66x CorePac[4-7], this generic primary interrupt comes from CIC1.
(2) N = core number.

Copyright © 2012–2017, Texas Instruments Incorporated

Table 8-22. System Event Mapping — C66x CorePac Primary Interrupts (continued)

EVENT NO.	EVENT NAME	DESCRIPTION
54	QMSS_INTD_2_HIGH_16_PLUS_N(2)	Navigator 2 accumulated hi-priority interrupt 16
55	QMSS_INTD_2_HIGH_24_PLUS_N(2)	Navigator 2 accumulated hi-priority interrupt 24
56	CIC_OUT0	CIC Interrupt Controller output(1)
57	CIC_OUT1	CIC Interrupt Controller output(1)
58	CIC_OUT2	CIC Interrupt Controller output(1)
59	CIC_OUT3	CIC Interrupt Controller output(1)
60	CIC_OUT4	CIC Interrupt Controller output(1)
61	CIC_OUT5	CIC Interrupt Controller output(1)
62	CIC_OUT6	CIC Interrupt Controller output(1)
63	CIC_OUT7	CIC Interrupt Controller output(1)
64	TIMER_N_INTL	Local timer interrupt low
65	TIMER_N_INTH	Local timer interrupt high
66	TIMER_8_INTL	Timer interrupt low
67	TIMER_8_INTH	Timer interrupt high
68	TIMER_9_INTL	Timer interrupt low
69	TIMER_9_INTH	Timer interrupt high
70	TIMER_10_INTL	Timer interrupt low
71	TIMER_10_INTH	Timer interrupt high
72	TIMER_11_INTL	Timer interrupt low
73	TIMER_11_INTH	Timer interrupt high
74	CIC_OUT8_PLUS_16_MUL_N(2)	CIC Interrupt Controller output(1)
75	CIC_OUT9_PLUS_16_MUL_N(2)	CIC Interrupt Controller output(1)
76	CIC_OUT10_PLUS_16_MUL_N(2)	CIC Interrupt Controller output(1)
77	CIC_OUT11_PLUS_16_MUL_N(2)	CIC Interrupt Controller output(1)
78	TIMER_14_INTL	Timer interrupt low
79	TIMER_14_INTH	Timer interrupt high
80	TIMER_15_INTL	Timer interrupt low
81	TIMER_15_INTH	Timer interrupt high
82	GPIO_INT8	Local GPIO interrupt
83	GPIO_INT9	Local GPIO interrupt
84	GPIO_INT10	Local GPIO interrupt
85	GPIO_INT11	Local GPIO interrupt
86	GPIO_INT12	Local GPIO interrupt
87	Reserved	Reserved
88	Reserved	Reserved
89	Reserved	Reserved
90	Reserved	Reserved
91	Reserved	Reserved
92	Reserved	Reserved
93	Reserved	Reserved
94	Reserved	Reserved
95	CIC_OUT67_PLUS_10_MUL_N(2)	CIC Interrupt Controller output(1)
96	INTERR	Dropped C66x CorePac interrupt event
97	EMC_IDMAERR	Invalid IDMA parameters
98	Reserved	Reserved
99	CIC_2_SPECIAL_BROADCAST	CIC Interrupt Controller output
100	EFIINT0	EFI interrupt from Side A

Copyright © 2012–2017, Texas Instruments Incorporated

Table 8-22. System Event Mapping — C66x CorePac Primary Interrupts (continued)

EVENT NO.	EVENT NAME	DESCRIPTION
101	EFIINT1	EFI interrupt from Side B
102	GPIO_INT13	Local GPIO interrupt
103	GPIO_INT14	Local GPIO interrupt
104	GPIO_INT15	Local GPIO interrupt
105	IPC_GRN	Boot CFG
106	GPIO_INTN	GPIO interrupt
107	CIC_OUT12_PLUS_16_MUL_N(2)	CIC Interrupt Controller output(1)
108	CIC_OUT34	CIC Interrupt Controller output(1)
109	CIC_2_OUT13	CIC Interrupt Controller output
110	MDMAERREVT	DMA internal bus error event
111	Reserved	Reserved
112	EDMACC_0_4_TC_AET_INT	EDMA3CC0_4 AET event
113	PMC_ED	Single bit error detected during DMA read
114	EDMACC_1_2_TC_AET_INT	EDMA3CC1_2 AET event
115	EDMACC_1_3_TC_AET_INT	EDMA3CC3_4 AET event
116	UMC_ED1	Corrected bit error detected
117	UMC_ED2	Uncorrected bit error detected
118	PDC_INT	Power down sleep interrupt
119	SYS_CMPA	SYS CPU MP fault event
120	PMC_CMPA	CPU memory protection fault
121	PMC_DMPA	DMA memory protection fault
122	DMC_CMPA	CPU memory protection fault
123	DMC_DMPA	DMA memory protection fault
124	UMC_CMPA	CPU memory protection fault
125	UMC_DMPA	DMA memory protection fault
126	EMC_CMPA	CPU memory protection fault
127	EMC_BUSERR	Bus error interrupt

NOTE

Event No. 0 is identical to ARM GIC interrupt ID 0.

Table 8-23. System Event Mapping — ARM CorePac Interrupts

EVENT NO.	EVENT NAME	DESCRIPTION
0	RSTMUX_INT8	Boot config watchdog timer expiration (timer 16) event for ARM Core 0
1	RSTMUX_INT9	Boot config watchdog timer expiration (timer 17) event for ARM Core 1
2	RSTMUX_INT10	Boot config watchdog timer expiration (timer 18) event for ARM Core 2(1)
3	RSTMUX_INT11	Boot config watchdog timer expiration (timer 19) event for ARM Core 3(1)
4	IPC_GR8	Boot config IPCG
5	IPC_GR9	Boot config IPCG
6	IPC_GR10	Boot config IPCG
7	IPC_GR11	Boot config IPCG
8	SEM_INT8	Semaphore interrupt
9	SEM_INT9	Semaphore interrupt

(1) 66AK2H12/14 only.

Copyright © 2012–2017, Texas Instruments Incorporated

Table 8-23. System Event Mapping — ARM CorePac Interrupts (continued)

EVENT NO.	EVENT NAME	DESCRIPTION
10	SEM_INT10	Semaphore interrupt
11	SEM_INT11	Semaphore interrupt
12	SEM_ERR8	Semaphore error interrupt
13	SEM_ERR9	Semaphore error interrupt
14	SEM_ERR10	Semaphore error interrupt
15	SEM_ERR11	Semaphore error interrupt
16	MSMC_MPF_ERROR8	Memory protection fault indicators for system master PrivID = 8
17	MSMC_MPF_ERROR9	Memory protection fault indicators for system master PrivID = 9
18	MSMC_MPF_ERROR10	Memory protection fault indicators for system master PrivID = 10
19	MSMC_MPF_ERROR11	Memory protection fault indicators for system master PrivID = 11
20	ARM_NPMUIRQ0	ARM performance monitoring unit interrupt request
21	ARM_NPMUIRQ1	ARM performance monitoring unit interrupt request
22	ARM_NPMUIRQ2	ARM performance monitoring unit interrupt request
23	ARM_NPMUIRQ3	ARM performance monitoring unit interrupt request
24	ARM_NINTERRIRQ	ARM internal memory ECC error interrupt request
25	ARM_NAXIERRIRQ	ARM bus error interrupt request
26	PCIE_INT0	PCIE legacy INTA interrupt
27	PCIE_INT1	PCIE legacy INTB interrupt
28	PCIE_INT2	PCIE legacy INTC interrupt
29	PCIE_INT3	PCIE legacy INTD interrupt
30	PCIE_INT4	PCIE MSI interrupt
31	PCIE_INT5	PCIE MSI interrupt
32	PCIE_INT6	PCIE MSI interrupt
33	PCIE_INT7	PCIE MSI interrupt
34	PCIE_INT8	PCIE MSI interrupt
35	PCIE_INT9	PCIE MSI interrupt
36	PCIE_INT10	PCIE MSI interrupt
37	PCIE_INT11	PCIE MSI interrupt
38	PCIE_INT12	PCIE error interrupt
39	PCIE_INT13	PCIE power management interrupt
40	QMSS_QUE_PEND_658	Navigator transmit queue pending event for indicated queue
41	QMSS_QUE_PEND_659	Navigator transmit queue pending event for indicated queue
42	QMSS_QUE_PEND_660	Navigator transmit queue pending event for indicated queue
43	QMSS_QUE_PEND_661	Navigator transmit queue pending event for indicated queue
44	QMSS_QUE_PEND_662	Navigator transmit queue pending event for indicated queue
45	QMSS_QUE_PEND_663	Navigator transmit queue pending event for indicated queue
46	QMSS_QUE_PEND_664	Navigator transmit queue pending event for indicated queue
47	QMSS_QUE_PEND_665	Navigator transmit queue pending event for indicated queue
48	QMSS_QUE_PEND_8704	Navigator transmit queue pending event for indicated queue
49	QMSS_QUE_PEND_8705	Navigator transmit queue pending event for indicated queue
50	QMSS_QUE_PEND_8706	Navigator transmit queue pending event for indicated queue
51	QMSS_QUE_PEND_8707	Navigator transmit queue pending event for indicated queue
52	QMSS_QUE_PEND_8708	Navigator transmit queue pending event for indicated queue
53	QMSS_QUE_PEND_8709	Navigator transmit queue pending event for indicated queue
54	QMSS_QUE_PEND_8710	Navigator transmit queue pending event for indicated queue
55	QMSS_QUE_PEND_8711	Navigator transmit queue pending event for indicated queue
56	QMSS_QUE_PEND_8712	Navigator transmit queue pending event for indicated queue

Copyright © 2012–2017, Texas Instruments Incorporated

Table 8-23. System Event Mapping — ARM CorePac Interrupts (continued)

EVENT NO.	EVENT NAME	DESCRIPTION
57	QMSS_QUE_PEND_8713	Navigator transmit queue pending event for indicated queue
58	QMSS_QUE_PEND_8714	Navigator transmit queue pending event for indicated queue
59	QMSS_QUE_PEND_8715	Navigator transmit queue pending event for indicated queue
60	QMSS_QUE_PEND_8716	Navigator transmit queue pending event for indicated queue
61	QMSS_QUE_PEND_8717	Navigator transmit queue pending event for indicated queue
62	QMSS_QUE_PEND_8718	Navigator transmit queue pending event for indicated queue
63	QMSS_QUE_PEND_8719	Navigator transmit queue pending event for indicated queue
64	QMSS_QUE_PEND_8720	Navigator transmit queue pending event for indicated queue
65	QMSS_QUE_PEND_8721	Navigator transmit queue pending event for indicated queue
66	QMSS_QUE_PEND_8722	Navigator transmit queue pending event for indicated queue
67	QMSS_QUE_PEND_8723	Navigator transmit queue pending event for indicated queue
68	QMSS_QUE_PEND_8724	Navigator transmit queue pending event for indicated queue
69	QMSS_QUE_PEND_8725	Navigator transmit queue pending event for indicated queue
70	QMSS_QUE_PEND_8726	Navigator transmit queue pending event for indicated queue
71	QMSS_QUE_PEND_8727	Navigator transmit queue pending event for indicated queue
72	QMSS_QUE_PEND_8728	Navigator transmit queue pending event for indicated queue
73	QMSS_QUE_PEND_8729	Navigator transmit queue pending event for indicated queue
74	QMSS_QUE_PEND_8730	Navigator transmit queue pending event for indicated queue
75	QMSS_QUE_PEND_8731	Navigator transmit queue pending event for indicated queue
76	QMSS_QUE_PEND_8732	Navigator transmit queue pending event for indicated queue
77	QMSS_QUE_PEND_8733	Navigator transmit queue pending event for indicated queue
78	QMSS_QUE_PEND_8734	Navigator transmit queue pending event for indicated queue
79	QMSS_QUE_PEND_8735	Navigator transmit queue pending event for indicated queue
80	TIMER_0_INTL	Timer interrupt low
81	TIMER_0_INTH	Timer interrupt high
82	TIMER_1_INTL	Timer interrupt low
83	TIMER_1_INTH	Timer interrupt high
84	TIMER_2_INTL	Timer interrupt low
85	TIMER_2_INTH	Timer interrupt high
86	TIMER_3_INTL	Timer interrupt low
87	TIMER_3_INTH	Timer interrupt high
88	TIMER_4_INTL	Timer interrupt low(1)
89	TIMER_4_INTH	Timer interrupt high(1)
90	TIMER_5_INTL	Timer interrupt low(1)
91	TIMER_5_INTH	Timer interrupt high(1)
92	TIMER_6_INTL	Timer interrupt low(1)
93	TIMER_6_INTH	Timer interrupt high(1)
94	TIMER_7_INTL	Timer interrupt low(1)
95	TIMER_7_INTH	Timer interrupt high(1)
96	TIMER_8_INTL	Timer interrupt low
97	TIMER_8_INTH	Timer interrupt high
98	TIMER_9_INTL	Timer interrupt low
99	TIMER_9_INTH	Timer interrupt high
100	TIMER_10_INTL	Timer interrupt low
101	TIMER_10_INTH	Timer interrupt high
102	TIMER_11_INTL	Timer interrupt low
103	TIMER_11_INTH	Timer interrupt high

Copyright © 2012–2017, Texas Instruments Incorporated

Table 8-23. System Event Mapping — ARM CorePac Interrupts (continued)

EVENT NO.	EVENT NAME	DESCRIPTION
104	TIMER_12_INTL	Timer interrupt low
105	TIMER_12_INTH	Timer interrupt high
106	TIMER_13_INTL	Timer interrupt low
107	TIMER_13_INTH	Timer interrupt high
108	TIMER_14_INTL	Timer interrupt low
109	TIMER_14_INTH	Timer interrupt high
110	TIMER_15_INTL	Timer interrupt low
111	TIMER_15_INTH	Timer interrupt high
112	TIMER_16_INTL	Timer interrupt low
113	TIMER_16_INTH	Timer interrupt high
114	TIMER_17_INTL	Timer interrupt low
115	TIMER_17_INTH	Timer interrupt high
116	TIMER_18_INTL	Timer interrupt low(1)
117	TIMER_18_INTH	Timer interrupt high(1)
118	TIMER_19_INTL	Timer interrupt low(1)
119	TIMER_19_INTH	Timer interrupt high(1)
120	GPIO_INT0	GPIO interrupt
121	GPIO_INT1	GPIO interrupt
122	GPIO_INT2	GPIO interrupt
123	GPIO_INT3	GPIO interrupt
124	GPIO_INT4	GPIO interrupt
125	GPIO_INT5	GPIO interrupt
126	GPIO_INT6	GPIO interrupt
127	GPIO_INT7	GPIO interrupt
128	GPIO_INT8	GPIO interrupt
129	GPIO_INT9	GPIO interrupt
130	GPIO_INT10	GPIO interrupt
131	GPIO_INT11	GPIO interrupt
132	GPIO_INT12	GPIO interrupt
133	GPIO_INT13	GPIO interrupt
134	GPIO_INT14	GPIO interrupt
135	GPIO_INT15	GPIO interrupt
136	GPIO_INT16	GPIO interrupt
137	GPIO_INT17	GPIO interrupt
138	GPIO_INT18	GPIO interrupt
139	GPIO_INT19	GPIO interrupt
140	GPIO_INT20	GPIO interrupt
141	GPIO_INT21	GPIO interrupt
142	GPIO_INT22	GPIO interrupt
143	GPIO_INT23	GPIO interrupt
144	GPIO_INT24	GPIO interrupt
145	GPIO_INT25	GPIO interrupt
146	GPIO_INT26	GPIO interrupt
147	GPIO_INT27	GPIO interrupt
148	GPIO_INT28	GPIO interrupt
149	GPIO_INT29	GPIO interrupt
150	GPIO_INT30	GPIO interrupt

Copyright © 2012–2017, Texas Instruments Incorporated

Table 8-23. System Event Mapping — ARM CorePac Interrupts (continued)

EVENT NO.	EVENT NAME	DESCRIPTION
151	GPIO_INT31	GPIO interrupt
152	SRIO_INT00	SRIO interrupt
153	SRIO_INT01	SRIO interrupt
154	SRIO_INT02	SRIO interrupt
155	SRIO_INT03	SRIO interrupt
156	SRIO_INT04	SRIO interrupt
157	SRIO_INT05	SRIO interrupt
158	SRIO_INT06	SRIO interrupt
159	SRIO_INT07	SRIO interrupt
160	SRIO_INT08	SRIO interrupt
161	SRIO_INT09	SRIO interrupt
162	SRIO_INT10	SRIO interrupt
163	SRIO_INT11	SRIO interrupt
164	SRIO_INT12	SRIO interrupt
165	SRIO_INT13	SRIO interrupt
166	SRIO_INT14	SRIO interrupt
167	SRIO_INT15	SRIO interrupt
168	SRIO_INT16	SRIO interrupt
169	SRIO_INT17	SRIO interrupt
170	SRIO_INT18	SRIO interrupt
171	SRIO_INT19	SRIO interrupt
172	SRIO_INT20	SRIO interrupt
173	SRIO_INT21	SRIO interrupt
174	SRIO_INT22	SRIO interrupt
175	SRIO_INT23	SRIO interrupt
176	SRIO_INT_PKTDMA_0	SRIO interrupt for Packet DMA starvation
177	QMSS_INTD_1_PKTDMA_0	Navigator interrupt for Packet DMA starvation
178	QMSS_INTD_1_PKTDMA_1	Navigator interrupt for Packet DMA starvation
179	QMSS_INTD_1_HIGH_0	Navigator hi interrupt
180	QMSS_INTD_1_HIGH_1	Navigator hi interrupt
181	QMSS_INTD_1_HIGH_2	Navigator hi interrupt
182	QMSS_INTD_1_HIGH_3	Navigator hi interrupt
183	QMSS_INTD_1_HIGH_4	Navigator hi interrupt
184	QMSS_INTD_1_HIGH_5	Navigator hi interrupt
185	QMSS_INTD_1_HIGH_6	Navigator hi interrupt
186	QMSS_INTD_1_HIGH_7	Navigator hi interrupt
187	QMSS_INTD_1_HIGH_8	Navigator hi interrupt
188	QMSS_INTD_1_HIGH_9	Navigator hi interrupt
189	QMSS_INTD_1_HIGH_10	Navigator hi interrupt
190	QMSS_INTD_1_HIGH_11	Navigator hi interrupt
191	QMSS_INTD_1_HIGH_12	Navigator hi interrupt
192	QMSS_INTD_1_HIGH_13	Navigator hi interrupt
193	QMSS_INTD_1_HIGH_14	Navigator hi interrupt
194	QMSS_INTD_1_HIGH_15	Navigator hi interrupt
195	QMSS_INTD_1_HIGH_16	Navigator hi interrupt
196	QMSS_INTD_1_HIGH_17	Navigator hi interrupt
197	QMSS_INTD_1_HIGH_18	Navigator hi interrupt

Copyright © 2012–2017, Texas Instruments Incorporated

Table 8-23. System Event Mapping — ARM CorePac Interrupts (continued)

EVENT NO.	EVENT NAME	DESCRIPTION
198	QMSS_INTD_1_HIGH_19	Navigator hi interrupt
199	QMSS_INTD_1_HIGH_20	Navigator hi interrupt
200	QMSS_INTD_1_HIGH_21	Navigator hi interrupt
201	QMSS_INTD_1_HIGH_22	Navigator hi interrupt
202	QMSS_INTD_1_HIGH_23	Navigator hi interrupt
203	QMSS_INTD_1_HIGH_24	Navigator hi interrupt
204	QMSS_INTD_1_HIGH_25	Navigator hi interrupt
205	QMSS_INTD_1_HIGH_26	Navigator hi interrupt
206	QMSS_INTD_1_HIGH_27	Navigator hi interrupt
207	QMSS_INTD_1_HIGH_28	Navigator hi interrupt
208	QMSS_INTD_1_HIGH_29	Navigator hi interrupt
209	QMSS_INTD_1_HIGH_30	Navigator hi interrupt
210	QMSS_INTD_1_HIGH_31	Navigator hi interrupt
211	QMSS_INTD_1_LOW_0	Navigator interrupt
212	QMSS_INTD_1_LOW_1	Navigator interrupt
213	QMSS_INTD_1_LOW_2	Navigator interrupt
214	QMSS_INTD_1_LOW_3	Navigator interrupt
215	QMSS_INTD_1_LOW_4	Navigator interrupt
216	QMSS_INTD_1_LOW_5	Navigator interrupt
217	QMSS_INTD_1_LOW_6	Navigator interrupt
218	QMSS_INTD_1_LOW_7	Navigator interrupt
219	QMSS_INTD_1_LOW_8	Navigator interrupt
220	QMSS_INTD_1_LOW_9	Navigator interrupt
221	QMSS_INTD_1_LOW_10	Navigator interrupt
222	QMSS_INTD_1_LOW_11	Navigator interrupt
223	QMSS_INTD_1_LOW_12	Navigator interrupt
224	QMSS_INTD_1_LOW_13	Navigator interrupt
225	QMSS_INTD_1_LOW_14	Navigator interrupt
226	QMSS_INTD_1_LOW_15	Navigator interrupt
227	QMSS_INTD_2_PKTDMA_0	Navigator interrupt for Packet DMA starvation
228	QMSS_INTD_2_PKTDMA_1	Navigator interrupt for Packet DMA starvation
229	QMSS_INTD_2_HIGH_0	Navigator second hi interrupt
230	QMSS_INTD_2_HIGH_1	Navigator second hi interrupt
231	QMSS_INTD_2_HIGH_2	Navigator second hi interrupt
232	QMSS_INTD_2_HIGH_3	Navigator second hi interrupt
233	QMSS_INTD_2_HIGH_4	Navigator second hi interrupt
234	QMSS_INTD_2_HIGH_5	Navigator second hi interrupt
235	QMSS_INTD_2_HIGH_6	Navigator second hi interrupt
236	QMSS_INTD_2_HIGH_7	Navigator second hi interrupt
237	QMSS_INTD_2_HIGH_8	Navigator second hi interrupt
238	QMSS_INTD_2_HIGH_9	Navigator second hi interrupt
239	QMSS_INTD_2_HIGH_10	Navigator second hi interrupt
240	QMSS_INTD_2_HIGH_11	Navigator second hi interrupt
241	QMSS_INTD_2_HIGH_12	Navigator second hi interrupt
242	QMSS_INTD_2_HIGH_13	Navigator second hi interrupt
243	QMSS_INTD_2_HIGH_14	Navigator second hi interrupt
244	QMSS_INTD_2_HIGH_15	Navigator second hi interrupt

Copyright © 2012–2017, Texas Instruments Incorporated

Table 8-23. System Event Mapping — ARM CorePac Interrupts (continued)

EVENT NO.	EVENT NAME	DESCRIPTION
245	QMSS_INTD_2_HIGH_16	Navigator second hi interrupt
246	QMSS_INTD_2_HIGH_17	Navigator second hi interrupt
247	QMSS_INTD_2_HIGH_18	Navigator second hi interrupt
248	QMSS_INTD_2_HIGH_19	Navigator second hi interrupt
249	QMSS_INTD_2_HIGH_20	Navigator second hi interrupt
250	QMSS_INTD_2_HIGH_21	Navigator second hi interrupt
251	QMSS_INTD_2_HIGH_22	Navigator second hi interrupt
252	QMSS_INTD_2_HIGH_23	Navigator second hi interrupt
253	QMSS_INTD_2_HIGH_24	Navigator second hi interrupt
254	QMSS_INTD_2_HIGH_25	Navigator second hi interrupt
255	QMSS_INTD_2_HIGH_26	Navigator second hi interrupt
256	QMSS_INTD_2_HIGH_27	Navigator second hi interrupt
257	QMSS_INTD_2_HIGH_28	Navigator second hi interrupt
258	QMSS_INTD_2_HIGH_29	Navigator second hi interrupt
259	QMSS_INTD_2_HIGH_30	Navigator second hi interrupt
260	QMSS_INTD_2_HIGH_31	Navigator second hi interrupt
261	QMSS_INTD_2_LOW_0	Navigator second interrupt
262	QMSS_INTD_2_LOW_1	Navigator second interrupt
263	QMSS_INTD_2_LOW_2	Navigator second interrupt
264	QMSS_INTD_2_LOW_3	Navigator second interrupt
265	QMSS_INTD_2_LOW_4	Navigator second interrupt
266	QMSS_INTD_2_LOW_5	Navigator second interrupt
267	QMSS_INTD_2_LOW_6	Navigator second interrupt
268	QMSS_INTD_2_LOW_7	Navigator second interrupt
269	QMSS_INTD_2_LOW_8	Navigator second interrupt
270	QMSS_INTD_2_LOW_9	Navigator second interrupt
271	QMSS_INTD_2_LOW_10	Navigator second interrupt
272	QMSS_INTD_2_LOW_11	Navigator second interrupt
273	QMSS_INTD_2_LOW_12	Navigator second interrupt
274	QMSS_INTD_2_LOW_13	Navigator second interrupt
275	QMSS_INTD_2_LOW_14	Navigator second interrupt
276	QMSS_INTD_2_LOW_15	Navigator second interrupt
277	UART_0_UARTINT	UART0 interrupt
278	UART_0_URXEVT	UART0 receive event
279	UART_0_UTXEVT	UART0 transmit event
280	UART_1_UARTINT	UART1 interrupt
281	UART_1_URXEVT	UART1 receive event
282	UART_1_UTXEVT	UART1 transmit event
283	I2C_0_INT	I2C interrupt
284	I2C_0_REVT	I2C receive event
285	I2C_0_XEVT	I2C transmit event
286	I2C_1_INT	I2C interrupt
287	I2C_1_REVT	I2C receive event
288	I2C_1_XEVT	I2C transmit event
289	I2C_2_INT	I2C interrupt
290	I2C_2_REVT	I2C receive event
291	I2C_2_XEVT	I2C transmit event

Copyright © 2012–2017, Texas Instruments Incorporated

Table 8-23. System Event Mapping — ARM CorePac Interrupts (continued)

EVENT NO.	EVENT NAME	DESCRIPTION
292	SPI_0_INT0	SPI interrupt
293	SPI_0_INT1	SPI interrupt
294	SPI_0_XEVT	SPI DMA TX event
295	SPI_0_REVT	SPI DMA RX event
296	SPI_1_INT0	SPI interrupt
297	SPI_1_INT1	SPI interrupt
298	SPI_1_XEVT	SPI DMA TX event
299	SPI_1_REVT	SPI DMA RX event
300	SPI_2_INT0	SPI interrupt
301	SPI_2_INT1	SPI interrupt
302	SPI_2_XEVT	SPI DMA TX event
303	SPI_2_REVT	SPI DMA RX event
304	DBGTBR_DMAINT	Debug trace buffer (TBR) DMA event
305	DBGTBR_ACQCOMP	Debug trace buffer (TBR) Acquisition has been completed
306	ARM_TBR_DMA	ARM trace buffer (TBR) DMA event
307	ARM_TBR_ACQ	ARM trace buffer (TBR) Acquisition has been completed
308	NETCP_MDIO_LINK_INT0	Packet Accelerator subsystem MDIO interrupt
309	NETCP_MDIO_LINK_INT1	Packet Accelerator subsystem MDIO interrupt
310	NETCP_MDIO_USER_INT0	Packet Accelerator subsystem MDIO interrupt
311	NETCP_MDIO_USER_INT1	Packet Accelerator subsystem MDIO interrupt
312	NETCP_MISC_INT	Packet Accelerator subsystem MDIO interrupt
313	NETCP_PKTDMA_INT0	Packet Accelerator Packet DMA starvation interrupt
314	EDMACC_0_GINT	EDMA3CC0 global completion interrupt
315	EDMACC_0_TC_0_INT	EDMA3CC0 individual completion interrupt
316	EDMACC_0_TC_1_INT	EDMA3CC0 individual completion interrupt
317	EDMACC_0_TC_2_INT	EDMA3CC0 individual completion interrupt
318	EDMACC_0_TC_3_INT	EDMA3CC0 individual completion interrupt
319	EDMACC_0_TC_4_INT	EDMA3CC0 individual completion interrupt
320	EDMACC_0_TC_5_INT	EDMA3CC0 individual completion interrupt
321	EDMACC_0_TC_6_INT	EDMA3CC0 individual completion interrupt
322	EDMACC_0_TC_7_INT	EDMA3CC0 individual completion interrupt
323	EDMACC_1_GINT	EDMA3CC1 global completion interrupt
324	EDMACC_1_TC_0_INT	EDMA3CC1 individual completion interrupt
325	EDMACC_1_TC_1_INT	EDMA3CC1 individual completion interrupt
326	EDMACC_1_TC_2_INT	EDMA3CC1 individual completion interrupt
327	EDMACC_1_TC_3_INT	EDMA3CC1 individual completion interrupt
328	EDMACC_1_TC_4_INT	EDMA3CC1 individual completion interrupt
329	EDMACC_1_TC_5_INT	EDMA3CC1 individual completion interrupt
330	EDMACC_1_TC_6_INT	EDMA3CC1 individual completion interrupt
331	EDMACC_1_TC_7_INT	EDMA3CC1 individual completion interrupt
332	EDMACC_2_GINT	EDMA3CC2 global completion interrupt
333	EDMACC_2_TC_0_INT	EDMA3CC2 individual completion interrupt
334	EDMACC_2_TC_1_INT	EDMA3CC2 individual completion interrupt
335	EDMACC_2_TC_2_INT	EDMA3CC2 individual completion interrupt
336	EDMACC_2_TC_3_INT	EDMA3CC2 individual completion interrupt
337	EDMACC_2_TC_4_INT	EDMA3CC2 individual completion interrupt
338	EDMACC_2_TC_5_INT	EDMA3CC2 individual completion interrupt

Copyright © 2012–2017, Texas Instruments Incorporated

Table 8-23. System Event Mapping — ARM CorePac Interrupts (continued)

EVENT NO.	EVENT NAME	DESCRIPTION
339	EDMACC_2_TC_6_INT	EDMA3CC2 individual completion interrupt
340	EDMACC_2_TC_7_INT	EDMA3CC2 individual completion interrupt
341	EDMACC_3_GINT	EDMA3CC3 global completion interrupt
342	EDMACC_3_TC_0_INT	EDMA3CC3 individual completion interrupt
343	EDMACC_3_TC_1_INT	EDMA3CC3 individual completion interrupt
344	EDMACC_3_TC_2_INT	EDMA3CC3 individual completion interrupt
345	EDMACC_3_TC_3_INT	EDMA3CC3 individual completion interrupt
346	EDMACC_3_TC_4_INT	EDMA3CC3 individual completion interrupt
347	EDMACC_3_TC_5_INT	EDMA3CC3 individual completion interrupt
348	EDMACC_3_TC_6_INT	EDMA3CC3 individual completion interrupt
349	EDMACC_3_TC_7_INT	EDMA3CC3 individual completion interrupt
350	EDMACC_4_GINT	EDMA3CC4 global completion interrupt
351	EDMACC_4_TC_0_INT	EDMA3CC4 individual completion interrupt
352	EDMACC_4_TC_1_INT	EDMA3CC4 individual completion interrupt
353	EDMACC_4_TC_2_INT	EDMA3CC4 individual completion interrupt
354	EDMACC_4_TC_3_INT	EDMA3CC4 individual completion interrupt
355	EDMACC_4_TC_4_INT	EDMA3CC4 individual completion interrupt
356	EDMACC_4_TC_5_INT	EDMA3CC4 individual completion interrupt
357	EDMACC_4_TC_6_INT	EDMA3CC4 individual completion interrupt
358	EDMACC_4_TC_7_INT	EDMA3CC4 individual completion interrupt
359	SR_0_PO_VCON_SMPSERR_INT	SmartReflex SMPS Error interrupt
360	SR_0_SMARTREFLEX_INTREQ0	SmartReflex controller interrupt
361	SR_0_SMARTREFLEX_INTREQ1	SmartReflex controller interrupt
362	SR_0_SMARTREFLEX_INTREQ2	SmartReflex controller interrupt
363	SR_0_SMARTREFLEX_INTREQ3	SmartReflex controller interrupt
364	SR_0_VPNOSMPSACK	SmartReflex VPVOLTUPDATE has been asserted but SMPS has not been responded to in a defined time interval
365	SR_0_VPEQVALUE	SmartReflex SRSINTERUPT is asserted, but the new voltage is not different from the current SMPS voltage
366	SR_0_VPMAXVDD	SmartReflex The new voltage required is equal to or greater than MaxVdd
367	SR_0_VPMINVDD	SmartReflex The new voltage required is equal to or less than MinVdd
368	SR_0_VPINIDLE	SmartReflex. Indicating that the FSM of voltage processor is in idle
369	SR_0_VPOPPCHANGEDONE	SmartReflex Indicating that the average frequency error is within the desired limit
370	SR_0_VPSMPSACK	SmartReflex VPVOLTUPDATE asserted and SMPS has acknowledged in a defined time interval
371	SR_0_SR_TEMPSENSOR	SmartReflex temperature threshold crossing interrupt
372	SR_0_SR_TIMERINT	SmartReflex internal timer expiration interrupt
373	SR_1_PO_VCON_SMPSERR_INT	SmartReflex SMPS Error interrupt
374	SR_1_SMARTREFLEX_INTREQ0	SmartReflex controller interrupt
375	SR_1_SMARTREFLEX_INTREQ1	SmartReflex controller interrupt
376	SR_1_SMARTREFLEX_INTREQ2	SmartReflex controller interrupt
377	SR_1_SMARTREFLEX_INTREQ3	SmartReflex controller interrupt
378	SR_1_VPNOSMPSACK	SmartReflex VPVOLTUPDATE has been asserted but SMPS has not been responded to in a defined time interval
379	SR_1_VPEQVALUE	SmartReflex SRSINTERUPT is asserted, but the new voltage is not different from the current SMPS voltage

Copyright © 2012–2017, Texas Instruments Incorporated

Table 8-23. System Event Mapping — ARM CorePac Interrupts (continued)

EVENT NO.	EVENT NAME	DESCRIPTION
380	SR_1_VPMAXVDD	SmartReflex The new voltage required is equal to or greater than MaxVdd
381	SR_1_VPMINVDD	SmartReflex The new voltage required is equal to or less than MinVdd
382	SR_1_VPINIDLE	SmartReflex. Indicating that the FSM of voltage processor is in idle
383	SR_1_VPOPPCHANGEDONE	SmartReflex Indicating that the average frequency error is within the desired limit
384	SR_1_VPSMPSACK	SmartReflex VPVOLTUPDATE asserted and SMPS has acknowledged in a defined time interval
385	SR_1_SR_TEMPSENSOR	SmartReflex temperature threshold crossing interrupt
386	SR_1_SR_TIMERINT	SmartReflex internal timer expiration interrupt
387	HyperLink_0_INT	HyperLink 0 interrupt
388	HyperLink_1_INT	HyperLink 1 interrupt
389	ARM_NCTIIRQ0	ARM cross trigger (CTI) IRQ interrupt
390	ARM_NCTIIRQ1	ARM cross trigger (CTI) IRQ interrupt
391	ARM_NCTIIRQ2	ARM cross trigger (CTI) IRQ interrupt
392	ARM_NCTIIRQ3	ARM cross trigger (CTI) IRQ interrupt
393	USB_INT00	USB event ring 0 interrupt
394	USB_INT01	USB event ring 1 interrupt
395	USB_INT02	USB event ring 2 interrupt
396	USB_INT03	USB event ring 3 interrupt
397	USB_INT04	USB event ring 4 interrupt
398	USB_OABSINT	USB OABS interrupt
399	USB_MISCINT	USB miscellaneous interrupt
400	Reserved	Reserved
401	Reserved	Reserved
402	10GbE_LINK_INT0	10 Gigabit Ethernet subsystem MDIO interrupt (66AK2H14 only)
403	10GbE_USER_INT0	10 Gigabit Ethernet subsystem MDIO interrupt (66AK2H14 only)
404	10GbE_LINK_INT1	10 Gigabit Ethernet subsystem MDIO interrupt (66AK2H14 only)
405	10GbE_USER_INT1	10 Gigabit Ethernet subsystem MDIO interrupt (66AK2H14 only)
406	10GbE_MISC_INT	10 Gigabit Ethernet subsystem MDIO interrupt (66AK2H14 only)
407	10GbE_INT_PKTDMA_0	10 Gigabit Ethernet Packet DMA starvation interrupt (66AK2H14 only)
408	Reserved	Reserved
409	Reserved	Reserved
410	Reserved	Reserved
411	Reserved	Reserved
412	Reserved	Reserved
413	Reserved	Reserved
414	Reserved	Reserved
415	Reserved	Reserved
416	Reserved	Reserved
417	Reserved	Reserved
418	Reserved	Reserved
419	Reserved	Reserved
420	Reserved	Reserved
421	Reserved	Reserved
422	Reserved	Reserved
423	Reserved	Reserved

Copyright © 2012–2017, Texas Instruments Incorporated

Table 8-23. System Event Mapping — ARM CorePac Interrupts (continued)

EVENT NO.	EVENT NAME	DESCRIPTION
424	Reserved	Reserved
425	Reserved	Reserved
426	Reserved	Reserved
427	Reserved	Reserved
428	Reserved	Reserved
429	Reserved	Reserved
430	Reserved	Reserved
431	Reserved	Reserved
432	Reserved	Reserved
433	Reserved	Reserved
434	Reserved	Reserved
435	Reserved	Reserved
436	Reserved	Reserved
437	Reserved	Reserved
438	Reserved	Reserved
439	Reserved	Reserved
440	Reserved	Reserved
441	Reserved	Reserved
442	Reserved	Reserved
443	Reserved	Reserved
444	Reserved	Reserved
445	Reserved	Reserved
446	Reserved	Reserved
447	Reserved	Reserved
448	CIC_2_OUT29	CIC2 interrupt
449	CIC_2_OUT30	CIC2 interrupt
450	CIC_2_OUT31	CIC2 interrupt
451	CIC_2_OUT32	CIC2 interrupt
452	CIC_2_OUT33	CIC2 interrupt
453	CIC_2_OUT34	CIC2 interrupt
454	CIC_2_OUT35	CIC2 interrupt
455	CIC_2_OUT36	CIC2 interrupt
456	CIC_2_OUT37	CIC2 interrupt
457	CIC_2_OUT38	CIC2 interrupt
458	CIC_2_OUT39	CIC2 interrupt
459	CIC_2_OUT40	CIC2 interrupt
460	CIC_2_OUT41	CIC2 interrupt
461	CIC_2_OUT42	CIC2 interrupt
462	CIC_2_OUT43	CIC2 interrupt
463	CIC_2_OUT44	CIC2 interrupt
464	CIC_2_OUT45	CIC2 interrupt
465	CIC_2_OUT46	CIC2 interrupt
466	CIC_2_OUT47	CIC2 interrupt
467	CIC_2_OUT18	CIC2 interrupt
468	CIC_2_OUT19	CIC2 interrupt
469	CIC_2_OUT22	CIC2 interrupt
470	CIC_2_OUT23	CIC2 interrupt

Copyright © 2012–2017, Texas Instruments Incorporated

Table 8-23. System Event Mapping — ARM CorePac Interrupts (continued)

EVENT NO.	EVENT NAME	DESCRIPTION
471	CIC_2_OUT50	CIC2 interrupt
472	CIC_2_OUT51	CIC2 interrupt
473	CIC_2_OUT66	CIC2 interrupt
474	CIC_2_OUT67	CIC2 interrupt
475	CIC_2_OUT88	CIC2 interrupt
476	CIC_2_OUT89	CIC2 interrupt
477	CIC_2_OUT90	CIC2 interrupt
478	CIC_2_OUT91	CIC2 interrupt
479	CIC_2_OUT92	CIC2 interrupt

Table 8-24, Table 8-25, and Table 8-26 list the C66x CorePac Secondary interrupt inputs.

Table 8-24. CIC0 Event Inputs — C66x CorePac Secondary Interrupts

EVENT NO.	EVENT NAME	DESCRIPTION
0	EDMACC_1_ERRINT	EDMA3CC1 error interrupt
1	EDMACC_1_MPINT	EDMA3CC1 memory protection interrupt
2	EDMACC_1_TC_0_ERRINT	EDMA3CC1 TPTC0 error interrupt
3	EDMACC_1_TC_1_ERRINT	EDMA3CC1 TPTC1 error interrupt
4	EDMACC_1_TC_2_ERRINT	EDMA3CC1 TPTC2 error interrupt
5	EDMACC_1_TC_3_ERRINT	EDMA3CC1 TPTC3 error interrupt
6	EDMACC_1_GINT	EDMA3CC1 GINT
7	Reserved	Reserved
8	EDMACC_1_TC_0_INT	EDMA3CC1 individual completion interrupt
9	EDMACC_1_TC_1_INT	EDMA3CC1 individual completion interrupt
10	EDMACC_1_TC_2_INT	EDMA3CC1 individual completion interrupt
11	EDMACC_1_TC_3_INT	EDMA3CC1 individual completion interrupt
12	EDMACC_1_TC_4_INT	EDMA3CC1 individual completion interrupt
13	EDMACC_1_TC_5_INT	EDMA3CC1 individual completion interrupt
14	EDMACC_1_TC_6_INT	EDMA3CC1 individual completion interrupt
15	EDMACC_1_TC_7_INT	EDMA3CC1 individual completion interrupt
16	EDMACC_2_ERRINT	EDMA3CC2 error interrupt
17	EDMACC_2_MPINT	EDMA3CC2 memory protection interrupt
18	EDMACC_2_TC_0_ERRINT	EDMA3CC2 TPTC0 error interrupt
19	EDMACC_2_TC_1_ERRINT	EDMA3CC2 TPTC1 error interrupt
20	EDMACC_2_TC_2_ERRINT	EDMA3CC2 TPTC2 error interrupt
21	EDMACC_2_TC_3_ERRINT	EDMA3CC2 TPTC3 error interrupt
22	EDMACC_2_GINT	EDMA3CC2 GINT
23	Reserved	Reserved
24	EDMACC_2_TC_0_INT	EDMA3CC2 individual completion interrupt
25	EDMACC_2_TC_1_INT	EDMA3CC2 individual completion interrupt
26	EDMACC_2_TC_2_INT	EDMA3CC2 individual completion interrupt
27	EDMACC_2_TC_3_INT	EDMA3CC2 individual completion interrupt
28	EDMACC_2_TC_4_INT	EDMA3CC2 individual completion interrupt
29	EDMACC_2_TC_5_INT	EDMA3CC2 individual completion interrupt
30	EDMACC_2_TC_6_INT	EDMA3CC2 individual completion interrupt
31	EDMACC_2_TC_7_INT	EDMA3CC2 individual completion interrupt
32	EDMACC_0_ERRINT	EDMA3CC0 error interrupt
33	EDMACC_0_MPINT	EDMA3CC0 memory protection interrupt

Copyright © 2012–2017, Texas Instruments Incorporated

Table 8-24. CIC0 Event Inputs — C66x CorePac Secondary Interrupts (continued)

EVENT NO.	EVENT NAME	DESCRIPTION
34	EDMACC_0_TC_0_ERRINT	EDMA3CC0 TPTC0 error interrupt
35	EDMACC_0_TC_1_ERRINT	EDMA3CC0 TPTC1 error interrupt
36	EDMACC_0_GINT	EDMA3CC0 global completion interrupt
37	Reserved	Reserved
38	EDMACC_0_TC_0_INT	EDMA3CC0 individual completion interrupt
39	EDMACC_0_TC_1_INT	EDMA3CC0 individual completion interrupt
40	EDMACC_0_TC_2_INT	EDMA3CC0 individual completion interrupt
41	EDMACC_0_TC_3_INT	EDMA3CC0 individual completion interrupt
42	EDMACC_0_TC_4_INT	EDMA3CC0 individual completion interrupt
43	EDMACC_0_TC_5_INT	EDMA3CC0 individual completion interrupt
44	EDMACC_0_TC_6_INT	EDMA3CC0 individual completion interrupt
45	EDMACC_0_TC_7_INT	EDMA3CC0 individual completion interrupt
46	Reserved	Reserved
47	QMSS_QUE_PEND_652	Navigator transmit queue pending event for indicated queue
48	PCIE_INT12	PCIE protocol error interrupt
49	PCIE_INT13	PCIE power management interrupt
50	PCIE_INT0	PCIE legacy INTA interrupt
51	PCIE_INT1	PCIE legacy INTB interrupt
52	PCIE_INT2	PCIE legacy INTC interrupt
53	PCIE_INT3	PCIE legacy INTD interrupt
54	SPI_0_INT0	SPI0 interrupt0
55	SPI_0_INT1	SPI0 interrupt1
56	SPI_0_XEVT	SPI0 transmit event
57	SPI_0_REVT	SPI0 receive event
58	I2C_0_INT	I2C0 interrupt
59	I2C_0_REVT	I2C0 receive event
60	I2C_0_XEVT	I2C0 transmit event
61	Reserved	Reserved
62	Reserved	Reserved
63	DBGTBR_DMAINT	Debug trace buffer (TBR) DMA event
64	MPU_12_INT	MPU12 addressing violation interrupt and protection violation interrupt
65	DBGTBR_ACQCOMP	Debug trace buffer (TBR) acquisition has been completed
66	MPU_13_INT	MPU13 addressing violation interrupt and protection violation interrupt
67	MPU_14_INT	MPU14 addressing violation interrupt and protection violation interrupt
68	NETCP_MDIO_LINK_INT0	Packet Accelerator 0 subsystem MDIO interrupt
69	NETCP_MDIO_LINK_INT1	Packet Accelerator 0 subsystem MDIO interrupt
70	NETCP_MDIO_USER_INT0	Packet Accelerator 0 subsystem MDIO interrupt
71	NETCP_MDIO_USER_INT1	Packet Accelerator 0 subsystem MDIO interrupt
72	NETCP_MISC_INT	Packet Accelerator 0 subsystem misc interrupt
73	TRACER_CORE_0_INT	Tracer sliding time window interrupt for DSP0 L2
74	TRACER_CORE_1_INT	Tracer sliding time window interrupt for DSP1 L2
75	TRACER_CORE_2_INT	Tracer sliding time window interrupt for DSP2 L2
76	TRACER_CORE_3_INT	Tracer sliding time window interrupt for DSP3 L2
77	TRACER_DDR_INT	Tracer sliding time window interrupt for MSMC-DDR3A
78	TRACER_MSMC_0_INT	Tracer sliding time window interrupt for MSMC SRAM bank0
79	TRACER_MSMC_1_INT	Tracer sliding time window interrupt for MSMC SRAM bank1
80	TRACER_MSMC_2_INT	Tracer sliding time window interrupt for MSMC SRAM bank2

Copyright © 2012–2017, Texas Instruments Incorporated

Table 8-24. CIC0 Event Inputs — C66x CorePac Secondary Interrupts (continued)

EVENT NO.	EVENT NAME	DESCRIPTION
81	TRACER_MSMC_3_INT	Tracer sliding time window interrupt for MSMC SRAM bank3
82	TRACER_CFG_INT	Tracer sliding time window interrupt for CFG0 TeraNet
83	TRACER_QMSS_QM_CFG1_INT	Tracer sliding time window interrupt for Navigator CFG1 slave port
84	TRACER_QMSS_DMA_INT	Tracer sliding time window interrupt for Navigator DMA internal bus slave port
85	TRACER_SEM_INT	Tracer sliding time window interrupt for Semaphore
86	PSC_ALLINT	Power & Sleep Controller interrupt
87	MSMC_SCRUB_CERROR	Correctable (1-bit) soft error detected during scrub cycle
88	BOOTCFG_INT	Chip-level MMR Error Register
89	SR_0_PO_VCON_SMPSERR_INT	SmartReflex SMPS error interrupt
90	MPU_0_INT	MPU0 addressing violation interrupt and protection violation interrupt
91	QMSS_QUE_PEND_653	Navigator transmit queue pending event for indicated queue
92	MPU_1_INT	MPU1 addressing violation interrupt and protection violation interrupt.
93	QMSS_QUE_PEND_654	Navigator transmit queue pending event for indicated queue
94	MPU_2_INT	MPU2 addressing violation interrupt and protection violation interrupt.
95	QMSS_QUE_PEND_655	Navigator transmit queue pending event for indicated queue
96	MPU_3_INT	MPU3 addressing violation interrupt and protection violation interrupt.
97	QMSS_QUE_PEND_656	Navigator transmit queue pending event for indicated queue
98	MSMC_DEDC_CERROR	Correctable (1-bit) soft error detected on SRAM read
99	MSMC_DEDC_NC_ERROR	Noncorrectable (2-bit) soft error detected on SRAM read
100	MSMC_SCRUB_NC_ERROR	Noncorrectable (2-bit) soft error detected during scrub cycle
101	MSMC_MPF_ERROR0	Memory protection fault indicators for system master PrivID = 0
102	MSMC_MPF_ERROR8	Memory protection fault indicators for system master PrivID = 8
103	MSMC_MPF_ERROR9	Memory protection fault indicators for system master PrivID = 9
104	MSMC_MPF_ERROR10	Memory protection fault indicators for system master PrivID = 10
105	MSMC_MPF_ERROR11	Memory protection fault indicators for system master PrivID = 11
106	MSMC_MPF_ERROR12	Memory protection fault indicators for system master PrivID = 12
107	MSMC_MPF_ERROR13	Memory protection fault indicators for system master PrivID = 13
108	MSMC_MPF_ERROR14	Memory protection fault indicators for system master PrivID = 14
109	MSMC_MPF_ERROR15	Memory protection fault indicators for system master PrivID = 15
110	DDR3_0_ERR	DDR3A_EMIF error interrupt
111	HYPERLINK_0_INT	HyperLink 0 interrupt
112	SRIO_INTDST0	SRIO interrupt
113	SRIO_INTDST1	SRIO interrupt
114	SRIO_INTDST2	SRIO interrupt
115	SRIO_INTDST3	SRIO interrupt
116	SRIO_INTDST4	SRIO interrupt
117	SRIO_INTDST5	SRIO interrupt
118	SRIO_INTDST6	SRIO interrupt
119	SRIO_INTDST7	SRIO interrupt
120	SRIO_INTDST8	SRIO interrupt
121	SRIO_INTDST9	SRIO interrupt
122	SRIO_INTDST10	SRIO interrupt
123	SRIO_INTDST11	SRIO interrupt
124	SRIO_INTDST12	SRIO interrupt
125	SRIO_INTDST13	SRIO interrupt
126	SRIO_INTDST14	SRIO interrupt
127	SRIO_INTDST15	SRIO interrupt

Copyright © 2012–2017, Texas Instruments Incorporated

Table 8-24. CIC0 Event Inputs — C66x CorePac Secondary Interrupts (continued)

EVENT NO.	EVENT NAME	DESCRIPTION
128	AEMIF_EASYNCERR	Asynchronous EMIF16 error interrupt
129	TRACER_CORE_4_INT	Tracer sliding time window interrupt for DSP4 L2
130	TRACER_CORE_5_INT	Tracer sliding time window interrupt for DSP5 L2
131	TRACER_CORE_6_INT	Tracer sliding time window interrupt for DSP6 L2
132	TRACER_CORE_7_INT	Tracer sliding time window interrupt for DSP7 L2
133	QMSS_INTD_1_PKTDMA_0	Navigator interrupt for Packet DMA starvation
134	QMSS_INTD_1_PKTDMA_1	Navigator interrupt for Packet DMA starvation
135	SRIO_INT_PKTDMA_0	IPC interrupt generation
136	NETCP_PKTDMA_INT0	Packet Accelerator0 Packet DMA starvation interrupt
137	SR_0_SMARTREFLEX_INTREQ0	SmartReflex controller interrupt
138	SR_0_SMARTREFLEX_INTREQ1	SmartReflex controller interrupt
139	SR_0_SMARTREFLEX_INTREQ2	SmartReflex controller interrupt
140	SR_0_SMARTREFLEX_INTREQ3	SmartReflex controller interrupt
141	SR_0_VPNOSMPSACK	SmartReflex VPVOLTUPDATE has been asserted but SMPS has not been responded to in a defined time interval
142	SR_0_VPEQVALUE	SmartReflex SRSINTERUPT is asserted, but the new voltage is not different from the current SMPS voltage
143	SR_0_VPMAXVDD	SmartReflex. The new voltage required is equal to or greater than MaxVdd
144	SR_0_VPMINVDD	SmartReflex. The new voltage required is equal to or less than MinVdd
145	SR_0_VPINIDLE	SmartReflex indicating that the FSM of voltage processor is in idle
146	SR_0_VPOPPCHANGEDONE	SmartReflex indicating that the average frequency error is within the desired limit
147	Reserved	Reserved
148	UART_0_UARTINT	UART0 interrupt
149	UART_0_URXEVT	UART0 receive event
150	UART_0_UTXEVT	UART0 transmit event
151	QMSS_QUE_PEND_657	Navigator transmit queue pending event for indicated queue
152	QMSS_QUE_PEND_658	Navigator transmit queue pending event for indicated queue
153	QMSS_QUE_PEND_659	Navigator transmit queue pending event for indicated queue
154	QMSS_QUE_PEND_660	Navigator transmit queue pending event for indicated queue
155	QMSS_QUE_PEND_661	Navigator transmit queue pending event for indicated queue
156	QMSS_QUE_PEND_662	Navigator transmit queue pending event for indicated queue
157	QMSS_QUE_PEND_663	Navigator transmit queue pending event for indicated queue
158	QMSS_QUE_PEND_664	Navigator transmit queue pending event for indicated queue
159	QMSS_QUE_PEND_665	Navigator transmit queue pending event for indicated queue
160	SR_0_VPSMPSACK	SmartReflex VPVOLTUPDATE asserted and SMPS has acknowledged in a defined time interval
161	ARM_TBR_DMA	ARM trace buffer (TBR) DMA event
162	ARM_TBR_ACQ	ARM trace buffer (TBR) acquisition has been completed
163	ARM_NINTERRIRQ	ARM internal memory ECC error interrupt request
164	ARM_NAXIERRIRQ	ARM bus error interrupt request
165	SR_0_SR_TEMPSENSOR	SmartReflex temperature threshold crossing interrupt
166	SR_0_SR_TIMERINT	SmartReflex internal timer expiration interrupt
167	Reserved	Reserved
168	Reserved	Reserved
169	Reserved	Reserved
170	Reserved	Reserved
171	Reserved	Reserved

Copyright © 2012–2017, Texas Instruments Incorporated

Table 8-24. CIC0 Event Inputs — C66x CorePac Secondary Interrupts (continued)

EVENT NO.	EVENT NAME	DESCRIPTION
172	Reserved	Reserved
173	Reserved	Reserved
174	Reserved	Reserved
175	TIMER_7_INTL	Timer interrupt low(1)
176	TIMER_7_INTH	Timer interrupt high(1)
177	TIMER_6_INTL	Timer interrupt low(1)
178	TIMER_6_INTH	Timer interrupt high(1)
179	TIMER_5_INTL	Timer interrupt low(1)
180	TIMER_5_INTH	Timer interrupt high(1)
181	TIMER_4_INTL	Timer interrupt low(1)
182	TIMER_4_INTH	Timer interrupt high(1)
183	TIMER_3_INTL	Timer interrupt low
184	TIMER_3_INTH	Timer interrupt high
185	TIMER_2_INTL	Timer interrupt low
186	TIMER_2_INTH	Timer interrupt high
187	TIMER_1_INTL	Timer interrupt low
188	TIMER_1_INTH	Timer interrupt high
189	TIMER_0_INTL	Timer interrupt low
190	TIMER_0_INTH	Timer interrupt high
191	Reserved	Reserved
192	Reserved	Reserved
193	Reserved	Reserved
194	Reserved	Reserved
195	Reserved	Reserved
196	Reserved	Reserved
197	Reserved	Reserved
198	Reserved	Reserved
199	Reserved	Reserved
200	Reserved	Reserved
201	Reserved	Reserved
202	Reserved	Reserved
203	Reserved	Reserved
204	Reserved	Reserved
205	Reserved	Reserved
206	Reserved	Reserved
207	EDMACC_4_ERRINT	EDMA3CC4 error interrupt
208	EDMACC_4_MPINT	EDMA3CC4 memory protection interrupt
209	EDMACC_4_TC_0_ERRINT	EDMA3CC4 TPTC0 error interrupt
210	EDMACC_4_TC_1_ERRINT	EDMA3CC4 TPTC1 error interrupt
211	EDMACC_4_GINT	EDMA3CC4 GINT
212	EDMACC_4_TC_0_INT	EDMA3CC4 individual completion interrupt
213	EDMACC_4_TC_1_INT	EDMA3CC4 individual completion interrupt
214	EDMACC_4_TC_2_INT	EDMA3CC4 individual completion interrupt
215	EDMACC_4_TC_3_INT	EDMA3CC4 individual completion interrupt
216	EDMACC_4_TC_4_INT	EDMA3CC4 individual completion interrupt
217	EDMACC_4_TC_5_INT	EDMA3CC4 individual completion interrupt

(1) 66AK2H12/14 only.

Copyright © 2012–2017, Texas Instruments Incorporated

Table 8-24. CIC0 Event Inputs — C66x CorePac Secondary Interrupts (continued)

EVENT NO.	EVENT NAME	DESCRIPTION
218	EDMACC_4_TC_6_INT	EDMA3CC4 individual completion interrupt
219	EDMACC_4_TC_7_INT	EDMA3CC4 individual completion interrupt
220	EDMACC_3_ERRINT	EDMA3CC3 error interrupt
221	EDMACC_3_MPINT	EDMA3CC3 memory protection interrupt
222	EDMACC_3_TC_0_ERRINT	EDMA3CC3 TPTC0 error interrupt
223	EDMACC_3_TC_1_ERRINT	EDMA3CC3 TPTC1 error interrupt
224	EDMACC_3_GINT	EDMA3CC3 GINT
225	EDMACC_3_TC_0_INT	EDMA3CC3 individual completion interrupt
226	EDMACC_3_TC_1_INT	EDMA3CC3 individual completion interrupt
227	EDMACC_3_TC_2_INT	EDMA3CC3 individual completion interrupt
228	EDMACC_3_TC_3_INT	EDMA3CC3 individual completion interrupt
229	EDMACC_3_TC_4_INT	EDMA3CC3 individual completion interrupt
230	EDMACC_3_TC_5_INT	EDMA3CC3 individual completion interrupt
231	EDMACC_3_TC_6_INT	EDMA3CC3 individual completion interrupt
232	EDMACC_3_TC_7_INT	EDMA3CC3 individual completion interrupt
233	UART_1_UARTINT	UART1 interrupt
234	UART_1_URXEVT	UART1 receive event
235	UART_1_UTXEVT	UART1 transmit event
236	I2C_1_INT	I2C1 interrupt
237	I2C_1_REVT	I2C1 receive event
238	I2C_1_XEVT	I2C1 transmit event
239	SPI_1_INT0	SPI1 interrupt0
240	SPI_1_INT1	SPI1 interrupt1
241	SPI_1_XEVT	SPI1 transmit event
242	SPI_1_REVT	SPI1 receive event
243	MPU_5_INT	MPU5 addressing violation interrupt and protection violation interrupt
244	MPU_8_INT	MPU8 addressing violation interrupt and protection violation interrupt
245	MPU_9_INT	MPU9 addressing violation interrupt and protection violation interrupt
246	MPU_11_INT	MPU11 addressing violation interrupt and protection violation interrupt
247	MPU_4_INT	MPU4 addressing violation interrupt and protection violation interrupt
248	MPU_6_INT	MPU6 addressing violation interrupt and protection violation interrupt
249	MPU_7_INT	MPU7 addressing violation interrupt and protection violation interrupt
250	MPU_10_INT	MPU10 addressing violation interrupt and protection violation interrupt
251	SPI_2_INT0	SPI2 interrupt0
252	SPI_2_INT1	SPI2 interrupt1
253	SPI_2_XEVT	SPI2 transmit event
254	SPI_2_REVT	SPI2 receive event
255	I2C_2_INT	I2C2 interrupt
256	I2C_2_REVT	I2C2 receive event
257	I2C_2_XEVT	I2C2 transmit event
258	Reserved	Reserved
259	Reserved	Reserved
260	Reserved	Reserved
261	Reserved	Reserved
262	Reserved	Reserved
263	Reserved	Reserved
264	Reserved	Reserved

Copyright © 2012–2017, Texas Instruments Incorporated

Table 8-24. CIC0 Event Inputs — C66x CorePac Secondary Interrupts (continued)

EVENT NO.	EVENT NAME	DESCRIPTION
265	Reserved	Reserved
266	Reserved	Reserved
267	Reserved	Reserved
268	Reserved	Reserved
269	Reserved	Reserved
270	Reserved	Reserved
271	Reserved	Reserved
272	Reserved	Reserved
273	Reserved	Reserved
274	Reserved	Reserved
275	Reserved	Reserved
276	Reserved	Reserved
277	Reserved	Reserved
278	Reserved	Reserved
279	Reserved	Reserved
280	Reserved	Reserved
281	Reserved	Reserved
282	Reserved	Reserved
283	Reserved	Reserved
284	Reserved	Reserved
285	Reserved	Reserved
286	Reserved	Reserved
287	Reserved	Reserved
288	Reserved	Reserved
289	Reserved	Reserved
290	Reserved	Reserved
291	Reserved	Reserved
292	QMSS_QUE_PEND_666	Navigator transmit queue pending event for indicated queue
293	QMSS_QUE_PEND_667	Navigator transmit queue pending event for indicated queue
294	QMSS_QUE_PEND_668	Navigator transmit queue pending event for indicated queue
295	QMSS_QUE_PEND_669	Navigator transmit queue pending event for indicated queue
296	QMSS_QUE_PEND_670	Navigator transmit queue pending event for indicated queue
297	QMSS_QUE_PEND_671	Navigator transmit queue pending event for indicated queue
298	QMSS_QUE_PEND_8844	Navigator transmit queue pending event for indicated queue
299	QMSS_QUE_PEND_8845	Navigator transmit queue pending event for indicated queue
300	QMSS_QUE_PEND_8846	Navigator transmit queue pending event for indicated queue
301	QMSS_QUE_PEND_8847	Navigator transmit queue pending event for indicated queue
302	QMSS_QUE_PEND_8848	Navigator transmit queue pending event for indicated queue
303	QMSS_QUE_PEND_8849	Navigator transmit queue pending event for indicated queue
304	QMSS_QUE_PEND_8850	Navigator transmit queue pending event for indicated queue
305	QMSS_QUE_PEND_8851	Navigator transmit queue pending event for indicated queue
306	QMSS_QUE_PEND_8852	Navigator transmit queue pending event for indicated queue
307	QMSS_QUE_PEND_8853	Navigator transmit queue pending event for indicated queue
308	QMSS_QUE_PEND_8854	Navigator transmit queue pending event for indicated queue
309	QMSS_QUE_PEND_8855	Navigator transmit queue pending event for indicated queue
310	QMSS_QUE_PEND_8856	Navigator transmit queue pending event for indicated queue
311	QMSS_QUE_PEND_8857	Navigator transmit queue pending event for indicated queue

Copyright © 2012–2017, Texas Instruments Incorporated

Table 8-24. CIC0 Event Inputs — C66x CorePac Secondary Interrupts (continued)

EVENT NO.	EVENT NAME	DESCRIPTION
312	QMSS_QUE_PEND_8858	Navigator transmit queue pending event for indicated queue
313	QMSS_QUE_PEND_8859	Navigator transmit queue pending event for indicated queue
314	QMSS_QUE_PEND_8860	Navigator transmit queue pending event for indicated queue
315	QMSS_QUE_PEND_8861	Navigator transmit queue pending event for indicated queue
316	QMSS_QUE_PEND_8862	Navigator transmit queue pending event for indicated queue
317	QMSS_QUE_PEND_8863	Navigator transmit queue pending event for indicated queue
318	QMSS_INTD_2_PKTDMA_0	Navigator ECC error interrupt
319	QMSS_INTD_2_PKTDMA_1	Navigator ECC error interrupt
320	QMSS_INTD_1_LOW_0	Navigator interrupt low
321	QMSS_INTD_1_LOW_1	Navigator interrupt low
322	QMSS_INTD_1_LOW_2	Navigator interrupt low
323	QMSS_INTD_1_LOW_3	Navigator interrupt low
324	QMSS_INTD_1_LOW_4	Navigator interrupt low
325	QMSS_INTD_1_LOW_5	Navigator interrupt low
326	QMSS_INTD_1_LOW_6	Navigator interrupt low
327	QMSS_INTD_1_LOW_7	Navigator interrupt low
328	QMSS_INTD_1_LOW_8	Navigator interrupt low
329	QMSS_INTD_1_LOW_9	Navigator interrupt low
330	QMSS_INTD_1_LOW_10	Navigator interrupt low
331	QMSS_INTD_1_LOW_11	Navigator interrupt low
332	QMSS_INTD_1_LOW_12	Navigator interrupt low
333	QMSS_INTD_1_LOW_13	Navigator interrupt low
334	QMSS_INTD_1_LOW_14	Navigator interrupt low
335	QMSS_INTD_1_LOW_15	Navigator interrupt low
336	QMSS_INTD_2_LOW_0	Navigator second interrupt low
337	QMSS_INTD_2_LOW_1	Navigator second interrupt low
338	QMSS_INTD_2_LOW_2	Navigator second interrupt low
339	QMSS_INTD_2_LOW_3	Navigator second interrupt low
340	QMSS_INTD_2_LOW_4	Navigator second interrupt low
341	QMSS_INTD_2_LOW_5	Navigator second interrupt low
342	QMSS_INTD_2_LOW_6	Navigator second interrupt low
343	QMSS_INTD_2_LOW_7	Navigator second interrupt low
344	QMSS_INTD_2_LOW_8	Navigator second interrupt low
345	QMSS_INTD_2_LOW_9	Navigator second interrupt low
346	QMSS_INTD_2_LOW_10	Navigator second interrupt low
347	QMSS_INTD_2_LOW_11	Navigator second interrupt low
348	QMSS_INTD_2_LOW_12	Navigator second interrupt low
349	QMSS_INTD_2_LOW_13	Navigator second interrupt low
350	QMSS_INTD_2_LOW_14	Navigator second interrupt low
351	QMSS_INTD_2_LOW_15	Navigator second interrupt low
352	TRACER_EDMACC_0	Tracer sliding time window interrupt for EDMA3CC0
353	TRACER_EDMACC_123_INT	Tracer sliding time window interrupt for EDMA3CC1, EDMA3CC2 and EDMA3CC3
354	TRACER_CIC_INT	Tracer sliding time window interrupt for interrupt controllers (CIC)
355	TRACER_MSMC_4_INT	Tracer sliding time window interrupt for MSMC SRAM bank4
356	TRACER_MSMC_5_INT	Tracer sliding time window interrupt for MSMC SRAM bank5
357	TRACER_MSMC_6_INT	Tracer sliding time window interrupt for MSMC SRAM bank6
358	TRACER_MSMC_7_INT	Tracer sliding time window interrupt for MSMC SRAM bank7

Copyright © 2012–2017, Texas Instruments Incorporated

Table 8-24. CIC0 Event Inputs — C66x CorePac Secondary Interrupts (continued)

EVENT NO.	EVENT NAME	DESCRIPTION
359	TRACER_SPI_ROM_EMIF_INT	Tracer sliding time window interrupt for SPI/ROM/EMIF16 modules
360	TRACER_QMSS_QM_CFG2_INT	Tracer sliding time window interrupt for QM2
361	Reserved	Reserved
362	Reserved	Reserved
363	TRACER_DDR_1_INT	Tracer sliding time window interrupt for DDR3B
364	Reserved	Reserved
365	HYPERLINK_1_INT	HyperLink 1 interrupt
366	Reserved	Reserved
367	Reserved	Reserved
368	Reserved	Reserved
369	Reserved	Reserved
370	Reserved	Reserved
371	Reserved	Reserved
372	Reserved	Reserved
373	Reserved	Reserved
374	Reserved	Reserved
375	Reserved	Reserved
376	Reserved	Reserved
377	Reserved	Reserved
378	Reserved	Reserved
379	Reserved	Reserved
380	Reserved	Reserved
381	Reserved	Reserved
382	Reserved	Reserved
383	Reserved	Reserved
384	Reserved	Reserved
385	Reserved	Reserved
386	Reserved	Reserved
387	Reserved	Reserved
388	Reserved	Reserved
389	Reserved	Reserved
390	Reserved	Reserved
391	Reserved	Reserved
392	Reserved	Reserved
393	Reserved	Reserved
394	Reserved	Reserved
395	Reserved	Reserved
396	Reserved	Reserved
397	Reserved	Reserved
398	Reserved	Reserved
399	Reserved	Reserved
400	Reserved	Reserved
401	Reserved	Reserved
402	Reserved	Reserved
403	Reserved	Reserved
404	Reserved	Reserved
405	Reserved	Reserved

Copyright © 2012–2017, Texas Instruments Incorporated

Table 8-24. CIC0 Event Inputs — C66x CorePac Secondary Interrupts (continued)

EVENT NO.	EVENT NAME	DESCRIPTION
406	Reserved	Reserved
407	Reserved	Reserved
408	Reserved	Reserved
409	Reserved	Reserved
410	Reserved	Reserved
411	Reserved	Reserved
412	Reserved	Reserved
413	Reserved	Reserved
414	Reserved	Reserved
415	Reserved	Reserved
416	Reserved	Reserved
417	Reserved	Reserved
418	Reserved	Reserved
419	Reserved	Reserved
420	Reserved	Reserved
421	Reserved	Reserved
422	USB_INT00	USB interrupt
423	USB_INT04	USB interrupt
424	USB_INT05	USB interrupt
425	USB_INT06	USB interrupt
426	USB_INT07	USB interrupt
427	USB_INT08	USB interrupt
428	USB_INT09	USB interrupt
429	USB_INT10	USB interrupt
430	USB_INT11	USB interrupt
431	USB_MISCINT	USB miscellaneous interrupt
432	USB_OABSINT	USB OABS interrupt
433	TIMER_12_INTL	Timer interrupt low
434	TIMER_12_INTH	Timer interrupt high
435	TIMER_13_INTL	Timer interrupt low
436	TIMER_13_INTH	Timer interrupt high
437	TIMER_14_INTL	Timer interrupt low
438	TIMER_14_INTH	Timer interrupt high
439	TIMER_15_INTL	Timer interrupt low
440	TIMER_15_INTH	Timer interrupt high
441	TIMER_16_INTL	Timer interrupt low
442	TIMER_17_INTL	Timer interrupt high
443	TIMER_18_INTL	Timer interrupt low(1)
444	TIMER_19_INTL	Timer interrupt high(1)
445	DDR3_1_ERR	DDR3B_EMIF error interrupt
446	GPIO_INT16	GPIO interrupt
447	GPIO_INT17	GPIO interrupt
448	GPIO_INT18	GPIO interrupt
449	GPIO_INT19	GPIO interrupt
450	GPIO_INT20	GPIO interrupt
451	GPIO_INT21	GPIO interrupt
452	GPIO_INT22	GPIO interrupt

Copyright © 2012–2017, Texas Instruments Incorporated

Table 8-24. CIC0 Event Inputs — C66x CorePac Secondary Interrupts (continued)

EVENT NO.	EVENT NAME	DESCRIPTION
453	GPIO_INT23	GPIO interrupt
454	GPIO_INT24	GPIO interrupt
455	GPIO_INT25	GPIO interrupt
456	GPIO_INT26	GPIO interrupt
457	GPIO_INT27	GPIO interrupt
458	GPIO_INT28	GPIO interrupt
459	GPIO_INT29	GPIO interrupt
460	GPIO_INT30	GPIO interrupt
461	GPIO_INT31	GPIO interrupt
462	SRIO_INTDST16	SRIOI interrupt
463	SRIO_INTDST17	SRIOI interrupt
464	SRIO_INTDST18	SRIOI interrupt
465	SRIO_INTDST19	SRIOI interrupt
466	PCIE_INT4	PCIE MSI interrupt
467	PCIE_INT5	PCIE MSI interrupt
468	PCIE_INT6	PCIE MSI interrupt
469	PCIE_INT7	PCIE MSI interrupt
470	SEM_INT12	Semaphore interrupt
471	SEM_INT13	Semaphore interrupt
472	SEM_ERR12	Semaphore error interrupt
473	SEM_ERR13	Semaphore error interrupt

Table 8-25. CIC1 Event Inputs — C66x CorePac Secondary Interrupts

EVENT NO.	EVENT NAME	DESCRIPTION
0	EDMACC_1_ERRINT	EDMA3CC1 error interrupt
1	EDMACC_1_MPINT	EDMA3CC1 memory protection interrupt
2	EDMACC_1_TC_0_ERRINT	EDMA3CC1 TPTC0 error interrupt
3	EDMACC_1_TC_1_ERRINT	EDMA3CC1 TPTC1 error interrupt
4	EDMACC_1_TC_2_ERRINT	EDMA3CC1 TPTC2 error interrupt
5	EDMACC_1_TC_3_ERRINT	EDMA3CC1 TPTC3 error interrupt
6	EDMACC_1_GINT	EDMA3CC1 GINT
7	Reserved	Reserved
8	EDMACC_1_TC_0_INT	EDMA3CC1 individual completion interrupt
9	EDMACC_1_TC_1_INT	EDMA3CC1 individual completion interrupt
10	EDMACC_1_TC_2_INT	EDMA3CC1 individual completion interrupt
11	EDMACC_1_TC_3_INT	EDMA3CC1 individual completion interrupt
12	EDMACC_1_TC_4_INT	EDMA3CC1 individual completion interrupt
13	EDMACC_1_TC_5_INT	EDMA3CC1 individual completion interrupt
14	EDMACC_1_TC_6_INT	EDMA3CC1 individual completion interrupt
15	EDMACC_1_TC_7_INT	EDMA3CC1 individual completion interrupt
16	EDMACC_2_ERRINT	EDMA3CC2 error interrupt
17	EDMACC_2_MPINT	EDMA3CC2 memory protection interrupt
18	EDMACC_2_TC_0_ERRINT	EDMA3CC2 TPTC0 error interrupt
19	EDMACC_2_TC_1_ERRINT	EDMA3CC2 TPTC1 error interrupt
20	EDMACC_2_TC_2_ERRINT	EDMA3CC2 TPTC2 error interrupt
21	EDMACC_2_TC_3_ERRINT	EDMA3CC2 TPTC3 error interrupt
22	EDMACC_2_GINT	EDMA3CC2 GINT

Copyright © 2012–2017, Texas Instruments Incorporated

Table 8-25. CIC1 Event Inputs — C66x CorePac Secondary Interrupts (continued)

EVENT NO.	EVENT NAME	DESCRIPTION
23	Reserved	Reserved
24	EDMACC_2_TC_0_INT	EDMA3CC2 individual completion interrupt
25	EDMACC_2_TC_1_INT	EDMA3CC2 individual completion interrupt
26	EDMACC_2_TC_2_INT	EDMA3CC2 individual completion interrupt
27	EDMACC_2_TC_3_INT	EDMA3CC2 individual completion interrupt
28	EDMACC_2_TC_4_INT	EDMA3CC2 individual completion interrupt
29	EDMACC_2_TC_5_INT	EDMA3CC2 individual completion interrupt
30	EDMACC_2_TC_6_INT	EDMA3CC2 individual completion interrupt
31	EDMACC_2_TC_7_INT	EDMA3CC2 individual completion interrupt
32	EDMACC_0_ERRINT	EDMA3CC0 error interrupt
33	EDMACC_0_MPINT	EDMA3CC0 memory protection interrupt
34	EDMACC_0_TC_0_ERRINT	EDMA3CC0 TPTC0 error interrupt
35	EDMACC_0_TC_1_ERRINT	EDMA3CC0 TPTC1 error interrupt
36	EDMACC_0_GINT	EDMA3CC0 GINT
37	Reserved	Reserved
38	EDMACC_0_TC_0_INT	EDMA3CC0 individual completion interrupt
39	EDMACC_0_TC_1_INT	EDMA3CC0 individual completion interrupt
40	EDMACC_0_TC_2_INT	EDMA3CC0 individual completion interrupt
41	EDMACC_0_TC_3_INT	EDMA3CC0 individual completion interrupt
42	EDMACC_0_TC_4_INT	EDMA3CC0 individual completion interrupt
43	EDMACC_0_TC_5_INT	EDMA3CC0 individual completion interrupt
44	EDMACC_0_TC_6_INT	EDMA3CC0 individual completion interrupt
45	EDMACC_0_TC_7_INT	EDMA3CC0 individual completion interrupt
46	Reserved	Reserved
47	QMSS_QUE_PEND_658	Navigator transmit queue pending event for indicated queue
48	PCIE_INT12	PCIE interrupt
49	PCIE_INT13	PCIE interrupt
50	PCIE_INT0	PCIE interrupt
51	PCIE_INT1	PCIE interrupt
52	PCIE_INT2	PCIE interrupt
53	PCIE_INT3	PCIE interrupt
54	SPI_0_INT0	SPI0 interrupt
55	SPI_0_INT1	SPI0 interrupt
56	SPI_0_XEVT	SPI0 transmit event
57	SPI_0_REVT	SPI0 receive event
58	I2C_0_INT	I2C0 interrupt
59	I2C_0_REVT	I2C0 receive event
60	I2C_0_XEVT	I2C0 transmit event
61	Reserved	Reserved
62	Reserved	Reserved
63	DBGTBR_DMAINT	Debug trace buffer (TBR) DMA event
64	MPU_12_INT	MPU12 interrupt
65	DBGTBR_ACQCOMP	Debug trace buffer (TBR) acquisition has been completed
66	MPU_13_INT	MPU13 interrupt
67	MPU_14_INT	MPU14 interrupt
68	NETCP_MDIO_LINK_INT0	Packet Accelerator 0 subsystem MDIO interrupt
69	NETCP_MDIO_LINK_INT1	Packet Accelerator 0 subsystem MDIO interrupt

Copyright © 2012–2017, Texas Instruments Incorporated

Table 8-25. CIC1 Event Inputs — C66x CorePac Secondary Interrupts (continued)

EVENT NO.	EVENT NAME	DESCRIPTION
70	NETCP_MDIO_USER_INT0	Packet Accelerator 0 subsystem MDIO interrupt
71	NETCP_MDIO_USER_INT1	Packet Accelerator 0 subsystem MDIO interrupt
72	NETCP_MISC_INT	Packet Accelerator 0 subsystem misc interrupt
73	TRACER_CORE_0_INT	Tracer sliding time window interrupt for DSP0 L2
74	TRACER_CORE_1_INT	Tracer sliding time window interrupt for DSP1 L2
75	TRACER_CORE_2_INT	Tracer sliding time window interrupt for DSP2 L2
76	TRACER_CORE_3_INT	Tracer sliding time window interrupt for DSP3 L2
77	TRACER_DDR_INT	Tracer sliding time window interrupt for MSMC-DDR3A
78	TRACER_MSMC_0_INT	Tracer sliding time window interrupt for MSMC SRAM bank0
79	TRACER_MSMC_1_INT	Tracer sliding time window interrupt for MSMC SRAM bank1
80	TRACER_MSMC_2_INT	Tracer sliding time window interrupt for MSMC SRAM bank2
81	TRACER_MSMC_3_INT	Tracer sliding time window interrupt for MSMC SRAM bank3
82	TRACER_CFG_INT	Tracer sliding time window interrupt for CFG0 TeraNet
83	TRACER_QMSS_QM_CFG1_INT	Tracer sliding time window interrupt for Navigator CFG1 slave port
84	TRACER_QMSS_DMA_INT	Tracer sliding time window interrupt for Navigator DMA internal bus slave port
85	TRACER_SEM_INT	Tracer sliding time window interrupt for Semaphore
86	PSC_ALLINT	Power & Sleep Controller interrupt
87	MSMC_SCRUB_CERROR	Correctable (1-bit) soft error detected during scrub cycle
88	BOOTCFG_INT	Chip-level MMR Error Register
89	SR_0_PO_VCON_SMPSERR_INT	SmartReflex SMPS error interrupt
90	MPU_0_INT	MPU0 addressing violation interrupt and protection violation interrupt.
91	QMSS_QUE_PEND_659	Navigator transmit queue pending event for indicated queue
92	MPU_1_INT	MPU1 addressing violation interrupt and protection violation interrupt.
93	QMSS_QUE_PEND_660	Navigator transmit queue pending event for indicated queue
94	MPU_2_INT	MPU2 addressing violation interrupt and protection violation interrupt.
95	QMSS_QUE_PEND_661	Navigator transmit queue pending event for indicated queue
96	MPU_3_INT	MPU3 addressing violation interrupt and protection violation interrupt.
97	QMSS_QUE_PEND_662	Navigator transmit queue pending event for indicated queue
98	MSMC_DEDC_CERROR	Correctable (1-bit) soft error detected on SRAM read
99	MSMC_DEDC_NC_ERROR	Noncorrectable (2-bit) soft error detected on SRAM read
100	MSMC_SCRUB_NC_ERROR	Noncorrectable (2-bit) soft error detected during scrub cycle
101	Reserved	Reserved
102	MSMC_MPF_ERROR8	Memory protection fault indicators for system master PrivID = 8
103	MSMC_MPF_ERROR9	Memory protection fault indicators for system master PrivID = 9
104	MSMC_MPF_ERROR10	Memory protection fault indicators for system master PrivID = 10
105	MSMC_MPF_ERROR11	Memory protection fault indicators for system master PrivID = 11
106	MSMC_MPF_ERROR12	Memory protection fault indicators for system master PrivID = 12
107	MSMC_MPF_ERROR13	Memory protection fault indicators for system master PrivID = 13
108	MSMC_MPF_ERROR14	Memory protection fault indicators for system master PrivID = 14
109	MSMC_MPF_ERROR15	Memory protection fault indicators for system master PrivID = 15
110	DDR3_0_ERR	DDR3A_EMIF Error interrupt
111	HYPERLINK_0_INT	HyperLink 0 interrupt
112	SRIO_INTDST0	SRIO interrupt
113	SRIO_INTDST1	SRIO interrupt
114	SRIO_INTDST2	SRIO interrupt
115	SRIO_INTDST3	SRIO interrupt
116	SRIO_INTDST4	SRIO interrupt

Copyright © 2012–2017, Texas Instruments Incorporated

Table 8-25. CIC1 Event Inputs — C66x CorePac Secondary Interrupts (continued)

EVENT NO.	EVENT NAME	DESCRIPTION
117	SRIO_INTDST5	SRIO interrupt
118	SRIO_INTDST6	SRIO interrupt
119	SRIO_INTDST7	SRIO interrupt
120	SRIO_INTDST8	SRIO interrupt
121	SRIO_INTDST9	SRIO interrupt
122	SRIO_INTDST10	SRIO interrupt
123	SRIO_INTDST11	SRIO interrupt
124	SRIO_INTDST12	SRIO interrupt
125	SRIO_INTDST13	SRIO interrupt
126	SRIO_INTDST14	SRIO interrupt
127	SRIO_INTDST15	SRIO interrupt
128	AEMIF_EASYNCERR	Asynchronous EMIF16 error interrupt
129	TRACER_CORE_4_INT	Tracer sliding time window interrupt for DSP4 L2 (1)
130	TRACER_CORE_5_INT	Tracer sliding time window interrupt for DSP5 L2 (1)
131	TRACER_CORE_6_INT	Tracer sliding time window interrupt for DSP6 L2 (1)
132	TRACER_CORE_7_INT	Tracer sliding time window interrupt for DSP7 L2 (1)
133	QMSS_INTD_1_PKTDMA_0	Navigator interrupt for Packet DMA starvation
134	QMSS_INTD_1_PKTDMA_1	Navigator interrupt for Packet DMA starvation
135	SRIO_INT_PKTDMA_0	IPC interrupt generation
136	NETCP_PKTDMA_INT0	Packet Accelerator0 Packet DMA starvation interrupt
137	SR_0_SMARTREFLEX_INTREQ0	SmartReflex controller interrupt
138	SR_0_SMARTREFLEX_INTREQ1	SmartReflex controller interrupt
139	SR_0_SMARTREFLEX_INTREQ2	SmartReflex controller interrupt
140	SR_0_SMARTREFLEX_INTREQ3	SmartReflex controller interrupt
141	SR_0_VPNOSMPSACK	SmartReflex VPVOLTUPDATE has been asserted but SMPS has not been responded to in a defined time interval
142	SR_0_VPEQVALUE	SmartReflex SRSINTERUPT is asserted, but the new voltage is not different from the current SMPS voltage
143	SR_0_VPMAXVDD	SmartReflex. The new voltage required is equal to or greater than MaxVdd
144	SR_0_VPMINVDD	SmartReflex. The new voltage required is equal to or less than MinVdd
145	SR_0_VPINIDLE	SmartReflex indicating that the FSM of voltage processor is in idle
146	SR_0_VPOPPCHANGEDONE	SmartReflex indicating that the average frequency error is within the desired limit
147	Reserved	Reserved
148	UART_0_UARTINT	UART0 interrupt
149	UART_0_URXEVT	UART0 receive event
150	UART_0_UTXEVT	UART0 transmit event
151	QMSS_QUE_PEND_663	Navigator transmit queue pending event for indicated queue
152	QMSS_QUE_PEND_664	Navigator transmit queue pending event for indicated queue
153	QMSS_QUE_PEND_665	Navigator transmit queue pending event for indicated queue
154	QMSS_QUE_PEND_666	Navigator transmit queue pending event for indicated queue
155	QMSS_QUE_PEND_667	Navigator transmit queue pending event for indicated queue
156	QMSS_QUE_PEND_668	Navigator transmit queue pending event for indicated queue
157	QMSS_QUE_PEND_669	Navigator transmit queue pending event for indicated queue
158	QMSS_QUE_PEND_670	Navigator transmit queue pending event for indicated queue
159	QMSS_QUE_PEND_671	Navigator transmit queue pending event for indicated queue
160	SR_0_VPSMPSACK	SmartReflex VPVOLTUPDATE asserted and SMPS has acknowledged in a defined time interval

(1) 66AK2H12/14 only.

Copyright © 2012–2017, Texas Instruments Incorporated

Table 8-25. CIC1 Event Inputs — C66x CorePac Secondary Interrupts (continued)

EVENT NO.	EVENT NAME	DESCRIPTION
161	ARM_TBR_DMA	ARM trace buffer (TBR) DMA event
162	ARM_TBR_ACQ	ARM trace buffer (TBR) Acquisition has been completed
163	ARM_NINTERRIRQ	ARM internal memory ECC error interrupt request
164	ARM_NAXIERRIRQ	ARM bus error interrupt request
165	SR_0_SR_TEMPSENSOR	SmartReflex temperature threshold crossing interrupt
166	SR_0_SR_TIMERINT	SmartReflex internal timer expiration interrupt
167	Reserved	Reserved
168	Reserved	Reserved
169	Reserved	Reserved
170	Reserved	Reserved
171	Reserved	Reserved
172	Reserved	Reserved
173	Reserved	Reserved
174	Reserved	Reserved
175	TIMER_7_INTL	Timer interrupt low(1)
176	TIMER_7_INTH	Timer interrupt high(1)
177	TIMER_6_INTL	Timer interrupt low(1)
178	TIMER_6_INTH	Timer interrupt high(1)
179	TIMER_5_INTL	Timer interrupt low(1)
180	TIMER_5_INTH	Timer interrupt high(1)
181	TIMER_4_INTL	Timer interrupt low(1)
182	TIMER_4_INTH	Timer interrupt high(1)
183	TIMER_3_INTL	Timer interrupt low
184	TIMER_3_INTH	Timer interrupt high
185	TIMER_2_INTL	Timer interrupt low
186	TIMER_2_INTH	Timer interrupt high
187	TIMER_1_INTL	Timer interrupt low
188	TIMER_1_INTH	Timer interrupt high
189	TIMER_0_INTL	Timer interrupt low
190	TIMER_0_INTH	Timer interrupt high
191	Reserved	Reserved
192	Reserved	Reserved
193	Reserved	Reserved
194	Reserved	Reserved
195	Reserved	Reserved
196	Reserved	Reserved
197	Reserved	Reserved
198	Reserved	Reserved
199	Reserved	Reserved
200	Reserved	Reserved
201	Reserved	Reserved
202	Reserved	Reserved
203	Reserved	Reserved
204	Reserved	Reserved
205	Reserved	Reserved
206	Reserved	Reserved
207	EDMACC_4_ERRINT	EDMA3CC4 error interrupt

Copyright © 2012–2017, Texas Instruments Incorporated

Table 8-25. CIC1 Event Inputs — C66x CorePac Secondary Interrupts (continued)

EVENT NO.	EVENT NAME	DESCRIPTION
208	EDMACC_4_MPINT	EDMA3CC4 memory protection interrupt
209	EDMACC_4_TC_0_ERRINT	EDMA3CC4 TPTC0 error interrupt
210	EDMACC_4_TC_1_ERRINT	EDMA3CC4 TPTC1 error interrupt
211	EDMACC_4_GINT	EDMA3CC4 GINT
212	EDMACC_4_TC_0_INT	EDMA3CC4 individual completion interrupt
213	EDMACC_4_TC_1_INT	EDMA3CC4 individual completion interrupt
214	EDMACC_4_TC_2_INT	EDMA3CC4 individual completion interrupt
215	EDMACC_4_TC_3_INT	EDMA3CC4 individual completion interrupt
216	EDMACC_4_TC_4_INT	EDMA3CC4 individual completion interrupt
217	EDMACC_4_TC_5_INT	EDMA3CC4 individual completion interrupt
218	EDMACC_4_TC_6_INT	EDMA3CC4 individual completion interrupt
219	EDMACC_4_TC_7_INT	EDMA3CC4 individual completion interrupt
220	EDMACC_3_ERRINT	EDMA3CC3 error interrupt
221	EDMACC_3_MPINT	EDMA3CC3 memory protection interrupt
222	EDMACC_3_TC_0_ERRINT	EDMA3CC3 TPTC0 error interrupt
223	EDMACC_3_TC_1_ERRINT	EDMA3CC3 TPTC1 error interrupt
224	EDMACC_3_GINT	EDMA3CC3 GINT
225	EDMACC_3_TC_0_INT	EDMA3CC3 individual completion interrupt
226	EDMACC_3_TC_1_INT	EDMA3CC3 individual completion interrupt
227	EDMACC_3_TC_2_INT	EDMA3CC3 individual completion interrupt
228	EDMACC_3_TC_3_INT	EDMA3CC3 individual completion interrupt
229	EDMACC_3_TC_4_INT	EDMA3CC3 individual completion interrupt
230	EDMACC_3_TC_5_INT	EDMA3CC3 individual completion interrupt
231	EDMACC_3_TC_6_INT	EDMA3CC3 individual completion interrupt
232	EDMACC_3_TC_7_INT	EDMA3CC3 individual completion interrupt
233	UART_1_UARTINT	UART1 interrupt
234	UART_1_URXEVT	UART1 receive event
235	UART_1_UTXEVT	UART1 transmit event
236	I2C_1_INT	I2C1 interrupt
237	I2C_1_REVT	I2C1 receive event
238	I2C_1_XEVT	I2C1 transmit event
239	SPI_1_INT0	SPI1 interrupt0
240	SPI_1_INT1	SPI1 interrupt1
241	SPI_1_XEVT	SPI1 transmit event
242	SPI_1_REVT	SPI1 receive event
243	MPU_5_INT	MPU5 addressing violation interrupt and protection violation interrupt
244	MPU_8_INT	MPU8 addressing violation interrupt and protection violation interrupt
245	MPU_9_INT	MPU9 addressing violation interrupt and protection violation interrupt
246	MPU_11_INT	MPU11 addressing violation interrupt and protection violation interrupt
247	MPU_4_INT	MPU4 addressing violation interrupt and protection violation interrupt
248	MPU_6_INT	MPU6 addressing violation interrupt and protection violation interrupt
249	MPU_7_INT	MPU7 addressing violation interrupt and protection violation interrupt
250	MPU_10_INT	MPU10 addressing violation interrupt and protection violation interrupt
251	SPI_2_INT0	SPI2 interrupt0
252	SPI_2_INT1	SPI2 interrupt1
253	SPI_2_XEVT	SPI2 transmit event
254	SPI_2_REVT	SPI2 receive event

Copyright © 2012–2017, Texas Instruments Incorporated

Table 8-25. CIC1 Event Inputs — C66x CorePac Secondary Interrupts (continued)

EVENT NO.	EVENT NAME	DESCRIPTION
255	I2C_2_INT	I2C2 interrupt
256	I2C_2_REVT	I2C2 receive event
257	I2C_2_XEVT	I2C2 transmit event
258	10GbE_LINK_INT0	10 Gigabit Ethernet subsystem MDIO interrupt (66AK2H14 only)
259	10GbE_LINK_INT1	10 Gigabit Ethernet subsystem MDIO interrupt (66AK2H14 only)
260	10GbE_USER_INT0	10 Gigabit Ethernet subsystem MDIO interrupt (66AK2H14 only)
261	10GbE_USER_INT1	10 Gigabit Ethernet subsystem MDIO interrupt (66AK2H14 only)
262	10GbE_MISC_INT	10 Gigabit Ethernet subsystem MDIO interrupt (66AK2H14 only)
263	10GbE_INT_PKTDMA_0	10 Gigabit Ethernet Packet DMA starvation interrupt (66AK2H14 only)
264	Reserved	Reserved
265	Reserved	Reserved
266	Reserved	Reserved
267	Reserved	Reserved
268	Reserved	Reserved
269	Reserved	Reserved
270	Reserved	Reserved
271	Reserved	Reserved
272	Reserved	Reserved
273	Reserved	Reserved
274	Reserved	Reserved
275	Reserved	Reserved
276	Reserved	Reserved
277	Reserved	Reserved
278	Reserved	Reserved
279	Reserved	Reserved
280	Reserved	Reserved
281	Reserved	Reserved
282	Reserved	Reserved
283	Reserved	Reserved
284	Reserved	Reserved
285	Reserved	Reserved
286	Reserved	Reserved
287	Reserved	Reserved
288	Reserved	Reserved
289	Reserved	Reserved
290	Reserved	Reserved
291	Reserved	Reserved
292	QMSS_QUE_PEND_652	Navigator transmit queue pending event for indicated queue
293	QMSS_QUE_PEND_653	Navigator transmit queue pending event for indicated queue
294	QMSS_QUE_PEND_654	Navigator transmit queue pending event for indicated queue
295	QMSS_QUE_PEND_655	Navigator transmit queue pending event for indicated queue
296	QMSS_QUE_PEND_656	Navigator transmit queue pending event for indicated queue
297	QMSS_QUE_PEND_657	Navigator transmit queue pending event for indicated queue
298	QMSS_QUE_PEND_8844	Navigator transmit queue pending event for indicated queue
299	QMSS_QUE_PEND_8845	Navigator transmit queue pending event for indicated queue
300	QMSS_QUE_PEND_8846	Navigator transmit queue pending event for indicated queue
301	QMSS_QUE_PEND_8847	Navigator transmit queue pending event for indicated queue

Copyright © 2012–2017, Texas Instruments Incorporated

Table 8-25. CIC1 Event Inputs — C66x CorePac Secondary Interrupts (continued)

EVENT NO.	EVENT NAME	DESCRIPTION
302	QMSS_QUE_PEND_8848	Navigator transmit queue pending event for indicated queue
303	QMSS_QUE_PEND_8849	Navigator transmit queue pending event for indicated queue
304	QMSS_QUE_PEND_8850	Navigator transmit queue pending event for indicated queue
305	QMSS_QUE_PEND_8851	Navigator transmit queue pending event for indicated queue
306	QMSS_QUE_PEND_8852	Navigator transmit queue pending event for indicated queue
307	QMSS_QUE_PEND_8853	Navigator transmit queue pending event for indicated queue
308	QMSS_QUE_PEND_8854	Navigator transmit queue pending event for indicated queue
309	QMSS_QUE_PEND_8855	Navigator transmit queue pending event for indicated queue
310	QMSS_QUE_PEND_8856	Navigator transmit queue pending event for indicated queue
311	QMSS_QUE_PEND_8857	Navigator transmit queue pending event for indicated queue
312	QMSS_QUE_PEND_8858	Navigator transmit queue pending event for indicated queue
313	QMSS_QUE_PEND_8859	Navigator transmit queue pending event for indicated queue
314	QMSS_QUE_PEND_8860	Navigator transmit queue pending event for indicated queue
315	QMSS_QUE_PEND_8861	Navigator transmit queue pending event for indicated queue
316	QMSS_QUE_PEND_8862	Navigator transmit queue pending event for indicated queue
317	QMSS_QUE_PEND_8863	Navigator transmit queue pending event for indicated queue
318	QMSS_INTD_2_PKTDMA_0	Navigator ECC error interrupt
319	QMSS_INTD_2_PKTDMA_1	Navigator ECC error interrupt
320	QMSS_INTD_1_LOW_0	Navigator interrupt low
321	QMSS_INTD_1_LOW_1	Navigator interrupt low
322	QMSS_INTD_1_LOW_2	Navigator interrupt low
323	QMSS_INTD_1_LOW_3	Navigator interrupt low
324	QMSS_INTD_1_LOW_4	Navigator interrupt low
325	QMSS_INTD_1_LOW_5	Navigator interrupt low
326	QMSS_INTD_1_LOW_6	Navigator interrupt low
327	QMSS_INTD_1_LOW_7	Navigator interrupt low
328	QMSS_INTD_1_LOW_8	Navigator interrupt low
329	QMSS_INTD_1_LOW_9	Navigator interrupt low
330	QMSS_INTD_1_LOW_10	Navigator interrupt low
331	QMSS_INTD_1_LOW_11	Navigator interrupt low
332	QMSS_INTD_1_LOW_12	Navigator interrupt low
333	QMSS_INTD_1_LOW_13	Navigator interrupt low
334	QMSS_INTD_1_LOW_14	Navigator interrupt low
335	QMSS_INTD_1_LOW_15	Navigator interrupt low
336	QMSS_INTD_2_LOW_0	Navigator second interrupt low
337	QMSS_INTD_2_LOW_1	Navigator second interrupt low
338	QMSS_INTD_2_LOW_2	Navigator second interrupt low
339	QMSS_INTD_2_LOW_3	Navigator second interrupt low
340	QMSS_INTD_2_LOW_4	Navigator second interrupt low
341	QMSS_INTD_2_LOW_5	Navigator second interrupt low
342	QMSS_INTD_2_LOW_6	Navigator second interrupt low
343	QMSS_INTD_2_LOW_7	Navigator second interrupt low
344	QMSS_INTD_2_LOW_8	Navigator second interrupt low
345	QMSS_INTD_2_LOW_9	Navigator second interrupt low
346	QMSS_INTD_2_LOW_10	Navigator second interrupt low
347	QMSS_INTD_2_LOW_11	Navigator second interrupt low
348	QMSS_INTD_2_LOW_12	Navigator second interrupt low

Copyright © 2012–2017, Texas Instruments Incorporated

Table 8-25. CIC1 Event Inputs — C66x CorePac Secondary Interrupts (continued)

EVENT NO.	EVENT NAME	DESCRIPTION
349	QMSS_INTD_2_LOW_13	Navigator second interrupt low
350	QMSS_INTD_2_LOW_14	Navigator second interrupt low
351	QMSS_INTD_2_LOW_15	Navigator second interrupt low
352	TRACER_EDMACC_0	Tracer sliding time window interrupt for EDMA3CC0
353	TRACER_EDMACC_123_INT	Tracer sliding time window interrupt for EDMA3CC1, EDMA3CC2 and EDMA3CC3
354	TRACER_CIC_INT	Tracer sliding time window interrupt for interrupt controllers (CIC)
355	TRACER_MSMC_4_INT	Tracer sliding time window interrupt for MSMC SRAM bank4
356	TRACER_MSMC_5_INT	Tracer sliding time window interrupt for MSMC SRAM bank5
357	TRACER_MSMC_6_INT	Tracer sliding time window interrupt for MSMC SRAM bank6
358	TRACER_MSMC_7_INT	Tracer sliding time window interrupt for MSMC SRAM bank7
359	TRACER_SPI_ROM_EMIF_INT	Tracer sliding time window interrupt for SPI/ROM/EMIF16 modules
360	TRACER_QMSS_QM_CFG2_INT	Tracer sliding time window interrupt for QM2
361	Reserved	Reserved
362	Reserved	Reserved
363	TRACER_DDR_1_INT	Tracer sliding time window interrupt for DDR3B
364	Reserved	Reserved
365	HYPERLINK_1_INT	HyperLink 1 interrupt
366	Reserved	Reserved
367	Reserved	Reserved
368	Reserved	Reserved
369	Reserved	Reserved
370	Reserved	Reserved
371	Reserved	Reserved
372	Reserved	Reserved
373	Reserved	Reserved
374	Reserved	Reserved
375	Reserved	Reserved
376	Reserved	Reserved
377	Reserved	Reserved
378	Reserved	Reserved
379	Reserved	Reserved
380	Reserved	Reserved
381	Reserved	Reserved
382	Reserved	Reserved
383	Reserved	Reserved
384	Reserved	Reserved
385	Reserved	Reserved
386	Reserved	Reserved
387	Reserved	Reserved
388	Reserved	Reserved
389	Reserved	Reserved
390	Reserved	Reserved
391	Reserved	Reserved
392	Reserved	Reserved
393	Reserved	Reserved
394	Reserved	Reserved
395	Reserved	Reserved

Copyright © 2012–2017, Texas Instruments Incorporated

Table 8-25. CIC1 Event Inputs — C66x CorePac Secondary Interrupts (continued)

EVENT NO.	EVENT NAME	DESCRIPTION
396	Reserved	Reserved
397	Reserved	Reserved
398	Reserved	Reserved
399	Reserved	Reserved
400	Reserved	Reserved
401	Reserved	Reserved
402	Reserved	Reserved
403	Reserved	Reserved
404	Reserved	Reserved
405	Reserved	Reserved
406	Reserved	Reserved
407	Reserved	Reserved
408	Reserved	Reserved
409	Reserved	Reserved
410	Reserved	Reserved
411	Reserved	Reserved
412	Reserved	Reserved
413	Reserved	Reserved
414	Reserved	Reserved
415	Reserved	Reserved
416	Reserved	Reserved
417	Reserved	Reserved
418	Reserved	Reserved
419	Reserved	Reserved
420	Reserved	Reserved
421	Reserved	Reserved
422	USB_INT00	USB interrupt
423	USB_INT04	USB interrupt
424	USB_INT05	USB interrupt
425	USB_INT06	USB interrupt
426	USB_INT07	USB interrupt
427	USB_INT08	USB interrupt
428	USB_INT09	USB interrupt
429	USB_INT10	USB interrupt
430	USB_INT11	USB interrupt
431	USB_MISCINT	USB miscellaneous interrupt
432	USB_OABSINT	USB OABS interrupt
433	TIMER_12_INTL	Timer interrupt low
434	TIMER_12_INTH	Timer interrupt high
435	TIMER_13_INTL	Timer interrupt low
436	TIMER_13_INTH	Timer interrupt high
437	TIMER_14_INTL	Timer interrupt low
438	TIMER_14_INTH	Timer interrupt high
439	TIMER_15_INTL	Timer interrupt low
440	TIMER_15_INTH	Timer interrupt high
441	TIMER_16_INTL	Timer interrupt low
442	TIMER_17_INTL	Timer interrupt high

Copyright © 2012–2017, Texas Instruments Incorporated

Table 8-25. CIC1 Event Inputs — C66x CorePac Secondary Interrupts (continued)

EVENT NO.	EVENT NAME	DESCRIPTION
443	TIMER_18_INTL	Timer interrupt low(1)
444	TIMER_19_INTL	Timer interrupt high(1)
445	DDR3_1_ERR	DDR3B_EMIF error interrupt
446	GPIO_INT16	GPIO interrupt
447	GPIO_INT17	GPIO interrupt
448	GPIO_INT18	GPIO interrupt
449	GPIO_INT19	GPIO interrupt
450	GPIO_INT20	GPIO interrupt
451	GPIO_INT21	GPIO interrupt
452	GPIO_INT22	GPIO interrupt
453	GPIO_INT23	GPIO interrupt
454	GPIO_INT24	GPIO interrupt
455	GPIO_INT25	GPIO interrupt
456	GPIO_INT26	GPIO interrupt
457	GPIO_INT27	GPIO interrupt
458	GPIO_INT28	GPIO interrupt
459	GPIO_INT29	GPIO interrupt
460	GPIO_INT30	GPIO interrupt
461	GPIO_INT31	GPIO interrupt
462	SRIO_INTDST20	SRIOI interrupt
463	SRIO_INTDST21	SRIOI interrupt
464	SRIO_INTDST22	SRIOI interrupt
465	SRIO_INTDST23	SRIOI interrupt
466	PCIE_INT8	PCIE MSI interrupt
467	PCIE_INT9	PCIE MSI interrupt
468	PCIE_INT10	PCIE MSI interrupt
469	PCIE_INT11	PCIE MSI interrupt
470	SEM_INT12	Semaphore interrupt
471	SEM_INT13	Semaphore interrupt
472	SEM_ERR12	Semaphore error interrupt
473	SEM_ERR13	Semaphore error interrupt
474	Reserved	Reserved

Table 8-26. CIC2 Event Inputs (Secondary Events for EDMA3CC0 and Hyperlinks)

EVENT NO.	EVENT NAME	DESCRIPTION
0	GPIO_INT8	GPIO interrupt
1	GPIO_INT9	GPIO interrupt
2	GPIO_INT10	GPIO interrupt
3	GPIO_INT11	GPIO interrupt
4	GPIO_INT12	GPIO interrupt
5	GPIO_INT13	GPIO interrupt
6	GPIO_INT14	GPIO interrupt
7	GPIO_INT15	GPIO interrupt
8	DBGTBR_DMAINT	Debug trace buffer (TBR) DMA event
9	Reserved	Reserved
10	Reserved	Reserved
11	TETB_FULLINT0	TETB0 is full

Copyright © 2012–2017, Texas Instruments Incorporated

Table 8-26. CIC2 Event Inputs (Secondary Events for EDMA3CC0 and Hyperlinks) (continued)

EVENT NO.	EVENT NAME	DESCRIPTION
12	TETB_HFULLINT0	TETB0 is half full
13	TETB_ACQINT0	TETB0 acquisition has been completed
14	TETB_FULLINT1	TETB1 is full
15	TETB_HFULLINT1	TETB1 is half full
16	TETB_ACQINT1	TETB1 acquisition has been completed
17	TETB_FULLINT2	TETB2 is full
18	TETB_HFULLINT2	TETB2 is half full
19	TETB_ACQINT2	TETB2 acquisition has been completed
20	TETB_FULLINT3	TETB3 is full
21	TETB_HFULLINT3	TETB3 is half full
22	TETB_ACQINT3	TETB3 acquisition has been completed
23	Reserved	Reserved
24	QMSS_INTD_1_HIGH_16	Navigator hi interrupt
25	QMSS_INTD_1_HIGH_17	Navigator hi interrupt
26	QMSS_INTD_1_HIGH_18	Navigator hi interrupt
27	QMSS_INTD_1_HIGH_19	Navigator hi interrupt
28	QMSS_INTD_1_HIGH_20	Navigator hi interrupt
29	QMSS_INTD_1_HIGH_21	Navigator hi interrupt
30	QMSS_INTD_1_HIGH_22	Navigator hi interrupt
31	QMSS_INTD_1_HIGH_23	Navigator hi interrupt
32	QMSS_INTD_1_HIGH_24	Navigator hi interrupt
33	QMSS_INTD_1_HIGH_25	Navigator hi interrupt
34	QMSS_INTD_1_HIGH_26	Navigator hi interrupt
35	QMSS_INTD_1_HIGH_27	Navigator hi interrupt
36	QMSS_INTD_1_HIGH_28	Navigator hi interrupt
37	QMSS_INTD_1_HIGH_29	Navigator hi interrupt
38	QMSS_INTD_1_HIGH_30	Navigator hi interrupt
39	QMSS_INTD_1_HIGH_31	Navigator hi interrupt
40	NETCP_MDIO_LINK_INT0	Packet Accelerator 0 subsystem MDIO interrupt
41	NETCP_MDIO_LINK_INT1	Packet Accelerator 0 subsystem MDIO interrupt
42	NETCP_MDIO_USER_INT0	Packet Accelerator 0 subsystem MDIO interrupt
43	NETCP_MDIO_USER_INT1	Packet Accelerator 0 subsystem MDIO interrupt
44	NETCP_MISC_INT	Packet Accelerator 0 subsystem MDIO interrupt
45	TRACER_CORE_0_INT	Tracer sliding time window interrupt for DSP0 L2
46	TRACER_CORE_1_INT	Tracer sliding time window interrupt for DSP1 L2
47	TRACER_CORE_2_INT	Tracer sliding time window interrupt for DSP2 L2
48	TRACER_CORE_3_INT	Tracer sliding time window interrupt for DSP3 L2
49	TRACER_DDR_INT	Tracer sliding time window interrupt for MSMC-DDR3A
50	TRACER_MSMC_0_INT	Tracer sliding time window interrupt for MSMC SRAM bank0
51	TRACER_MSMC_1_INT	Tracer sliding time window interrupt for MSMC SRAM bank1
52	TRACER_MSMC_2_INT	Tracer sliding time window interrupt for MSMC SRAM bank2
53	TRACER_MSMC_3_INT	Tracer sliding time window interrupt for MSMC SRAM bank3
54	TRACER_CFG_INT	Tracer sliding time window interrupt for TeraNet CFG
55	TRACER_QMSS_QM_CFG1_INT	Tracer sliding time window interrupt for Navigator CFG1 slave port
56	TRACER_QMSS_DMA_INT	Tracer sliding time window interrupt for Navigator DMA internal bus slave port
57	TRACER_SEM_INT	Tracer sliding time window interrupt for Semaphore interrupt
58	SEM_ERR0	Semaphore error interrupt

Copyright © 2012–2017, Texas Instruments Incorporated

Table 8-26. CIC2 Event Inputs (Secondary Events for EDMA3CC0 and Hyperlinks) (continued)

EVENT NO.	EVENT NAME	DESCRIPTION
59	SEM_ERR1	Semaphore error interrupt
60	SEM_ERR2	Semaphore error interrupt
61	SEM_ERR3	Semaphore error interrupt
62	BOOTCFG_INT	BOOTCFG error interrupt
63	NETCP_PKTDMA_INT0	Packet Accelerator0 Packet DMA starvation interrupt
64	MPU_0_INT	MPU0 interrupt
65	MSMC_SCRUB_CERROR	MSMC error interrupt
66	MPU_1_INT	MPU1 interrupt
67	SRIO_INT_PKTDMA_0	Packet Accelerator0 Packet DMA interrupt
68	MPU_2_INT	MPU2 interrupt
69	QMSS_INTD_1_PKTDMA_0	Navigator Packet DMA interrupt
70	MPU_3_INT	MPU3 interrupt
71	QMSS_INTD_1_PKTDMA_1	Navigator Packet DMA interrupt
72	MSMC_DEDC_CERROR	MSMC error interrupt
73	MSMC_DEDC_NC_ERROR	MSMC error interrupt
74	MSMC_SCRUB_NC_ERROR	MSMC error interrupt
75	Reserved	Reserved
76	MSMC_MPF_ERROR0	Memory protection fault indicators for system master PrivID = 0
77	MSMC_MPF_ERROR1	Memory protection fault indicators for system master PrivID = 1
78	MSMC_MPF_ERROR2	Memory protection fault indicators for system master PrivID = 2
79	MSMC_MPF_ERROR3	Memory protection fault indicators for system master PrivID = 3
80	MSMC_MPF_ERROR4	Memory protection fault indicators for system master PrivID = 4
81	MSMC_MPF_ERROR5	Memory protection fault indicators for system master PrivID = 5
82	MSMC_MPF_ERROR6	Memory protection fault indicators for system master PrivID = 6
83	MSMC_MPF_ERROR7	Memory protection fault indicators for system master PrivID = 7
84	MSMC_MPF_ERROR8	Memory protection fault indicators for system master PrivID = 8
85	MSMC_MPF_ERROR9	Memory protection fault indicators for system master PrivID = 9
86	MSMC_MPF_ERROR10	Memory protection fault indicators for system master PrivID = 10
87	MSMC_MPF_ERROR11	Memory protection fault indicators for system master PrivID = 11
88	MSMC_MPF_ERROR12	Memory protection fault indicators for system master PrivID = 12
89	MSMC_MPF_ERROR13	Memory protection fault indicators for system master PrivID = 13
90	MSMC_MPF_ERROR14	Memory protection fault indicators for system master PrivID = 14
91	MSMC_MPF_ERROR15	Memory protection fault indicators for system master PrivID = 15
92	Reserved	Reserved
93	SRIO_INTDST0	SRIO interrupt
94	SRIO_INTDST1	SRIO interrupt
95	SRIO_INTDST2	SRIO interrupt
96	SRIO_INTDST3	SRIO interrupt
97	SRIO_INTDST4	SRIO interrupt
98	SRIO_INTDST5	SRIO interrupt
99	SRIO_INTDST6	SRIO interrupt
100	SRIO_INTDST7	SRIO interrupt
101	SRIO_INTDST8	SRIO interrupt
102	SRIO_INTDST9	SRIO interrupt
103	SRIO_INTDST10	SRIO interrupt
104	SRIO_INTDST11	SRIO interrupt
105	SRIO_INTDST12	SRIO interrupt

Copyright © 2012–2017, Texas Instruments Incorporated

Table 8-26. CIC2 Event Inputs (Secondary Events for EDMA3CC0 and Hyperlinks) (continued)

EVENT NO.	EVENT NAME	DESCRIPTION
106	SRIO_INTDST13	SRIO interrupt
107	SRIO_INTDST14	SRIO interrupt
108	SRIO_INTDST15	SRIO interrupt
109	SRIO_INTDST16	SRIO interrupt
110	SRIO_INTDST17	SRIO interrupt
111	SRIO_INTDST18	SRIO interrupt
112	SRIO_INTDST19	SRIO interrupt
113	SRIO_INTDST20	SRIO interrupt
114	SRIO_INTDST21	SRIO interrupt
115	SRIO_INTDST22	SRIO interrupt
116	SRIO_INTDST23	SRIO interrupt
117	AEMIF_EASYNCERR	Asynchronous EMIF16 error interrupt
118	TETB_FULLINT4	TETB4 is full
119	TETB_HFULLINT4	TETB4 is half full
120	TETB_ACQINT4	TETB4 acquisition has been completed
121	TETB_FULLINT5	TETB5 is full
122	TETB_HFULLINT5	TETB5 is half full
123	TETB_ACQINT5	TETB5 acquisition has been completed
124	TETB_FULLINT6	TETB6 is full
125	TETB_HFULLINT6	TETB6 is half full
126	TETB_ACQINT6	TETB6 acquisition has been completed
127	TETB_FULLINT7	TETB7 is full
128	TETB_HFULLINT7	TETB7 is half full
129	TETB_ACQINT7	TETB7 acquisition has been completed
130	TRACER_CORE_4_INT	Tracer sliding time window interrupt for DSP4 L2
131	TRACER_CORE_5_INT	Tracer sliding time window interrupt for DSP5 L2
132	TRACER_CORE_6_INT	Tracer sliding time window interrupt for DSP6 L2
133	TRACER_CORE_7_INT	Tracer sliding time window interrupt for DSP7 L2
134	SEM_ERR4	Semaphore error interrupt
135	SEM_ERR5	Semaphore error interrupt
136	SEM_ERR6	Semaphore error interrupt
137	SEM_ERR7	Semaphore error interrupt
138	QMSS_INTD_1_HIGH_0	Navigator hi interrupt
139	QMSS_INTD_1_HIGH_1	Navigator hi interrupt
140	QMSS_INTD_1_HIGH_2	Navigator hi interrupt
141	QMSS_INTD_1_HIGH_3	Navigator hi interrupt
142	QMSS_INTD_1_HIGH_4	Navigator hi interrupt
143	QMSS_INTD_1_HIGH_5	Navigator hi interrupt
144	QMSS_INTD_1_HIGH_6	Navigator hi interrupt
145	QMSS_INTD_1_HIGH_7	Navigator hi interrupt
146	QMSS_INTD_1_HIGH_8	Navigator hi interrupt
147	QMSS_INTD_1_HIGH_9	Navigator hi interrupt
148	QMSS_INTD_1_HIGH_10	Navigator hi interrupt
149	QMSS_INTD_1_HIGH_11	Navigator hi interrupt
150	QMSS_INTD_1_HIGH_12	Navigator hi interrupt
151	QMSS_INTD_1_HIGH_13	Navigator hi interrupt
152	QMSS_INTD_1_HIGH_14	Navigator hi interrupt

Copyright © 2012–2017, Texas Instruments Incorporated

Table 8-26. CIC2 Event Inputs (Secondary Events for EDMA3CC0 and Hyperlinks) (continued)

EVENT NO.	EVENT NAME	DESCRIPTION
153	QMSS_INTD_1_HIGH_15	Navigator hi interrupt
154	QMSS_INTD_2_HIGH_0	Navigator second hi interrupt
155	QMSS_INTD_2_HIGH_1	Navigator second hi interrupt
156	QMSS_INTD_2_HIGH_2	Navigator second hi interrupt
157	QMSS_INTD_2_HIGH_3	Navigator second hi interrupt
158	QMSS_INTD_2_HIGH_4	Navigator second hi interrupt
159	QMSS_INTD_2_HIGH_5	Navigator second hi interrupt
160	QMSS_INTD_2_HIGH_6	Navigator second hi interrupt
161	QMSS_INTD_2_HIGH_7	Navigator second hi interrupt
162	QMSS_INTD_2_HIGH_8	Navigator second hi interrupt
163	QMSS_INTD_2_HIGH_9	Navigator second hi interrupt
164	QMSS_INTD_2_HIGH_10	Navigator second hi interrupt
165	QMSS_INTD_2_HIGH_11	Navigator second hi interrupt
166	QMSS_INTD_2_HIGH_12	Navigator second hi interrupt
167	QMSS_INTD_2_HIGH_13	Navigator second hi interrupt
168	QMSS_INTD_2_HIGH_14	Navigator second hi interrupt
169	QMSS_INTD_2_HIGH_15	Navigator second hi interrupt
170	QMSS_INTD_2_HIGH_16	Navigator second hi interrupt
171	QMSS_INTD_2_HIGH_17	Navigator second hi interrupt
172	QMSS_INTD_2_HIGH_18	Navigator second hi interrupt
173	QMSS_INTD_2_HIGH_19	Navigator second hi interrupt
174	QMSS_INTD_2_HIGH_20	Navigator second hi interrupt
175	QMSS_INTD_2_HIGH_21	Navigator second hi interrupt
176	QMSS_INTD_2_HIGH_22	Navigator second hi interrupt
177	QMSS_INTD_2_HIGH_23	Navigator second hi interrupt
178	QMSS_INTD_2_HIGH_24	Navigator second hi interrupt
179	QMSS_INTD_2_HIGH_25	Navigator second hi interrupt
180	QMSS_INTD_2_HIGH_26	Navigator second hi interrupt
181	QMSS_INTD_2_HIGH_27	Navigator second hi interrupt
182	QMSS_INTD_2_HIGH_28	Navigator second hi interrupt
183	QMSS_INTD_2_HIGH_29	Navigator second hi interrupt
184	QMSS_INTD_2_HIGH_30	Navigator second hi interrupt
185	QMSS_INTD_2_HIGH_31	Navigator second hi interrupt
186	MPU_12_INT	MPU12 addressing violation interrupt and protection violation interrupt
187	MPU_13_INT	MPU13 addressing violation interrupt and protection violation interrupt
188	MPU_14_INT	MPU14 addressing violation interrupt and protection violation interrupt
189	Reserved	Reserved
190	Reserved	Reserved
191	Reserved	Reserved
192	Reserved	Reserved
193	Reserved	Reserved
194	Reserved	Reserved
195	Reserved	Reserved
196	Reserved	Reserved
197	Reserved	Reserved
198	Reserved	Reserved
199	TRACER_QMSS_QM_CFG2_INT	Tracer sliding time window interrupt for Navigator CFG2 slave port

Copyright © 2012–2017, Texas Instruments Incorporated

Table 8-26. CIC2 Event Inputs (Secondary Events for EDMA3CC0 and Hyperlinks) (continued)

EVENT NO.	EVENT NAME	DESCRIPTION
200	TRACER_EDMACC_0	Tracer sliding time window interrupt foR EDMA3CC0
201	TRACER_EDMACC_123_INT	Tracer sliding time window interrupt for EDMA3CC1, EDMA3CC2 and EDMA3CC3
202	TRACER_CIC_INT	Tracer sliding time window interrupt for interrupt controllers (CIC)
203	Reserved	Reserved
204	MPU_5_INT	MPU5 addressing violation interrupt and protection violation interrupt
205	Reserved	Reserved
206	MPU_7_INT	MPU7 addressing violation interrupt and protection violation interrupt
207	MPU_8_INT	MPU8 addressing violation interrupt and protection violation interrupt
208	QMSS_INTD_2_PKTDMA_0	Navigator ECC error interrupt
209	QMSS_INTD_2_PKTDMA_1	Navigator ECC error interrupt
210	SR_0_VPSMPSACK	SmartReflex VPVOLTUPDATE asserted and SMPS has acknowledged in a defined time interval
211	DDR3_0_ERR	DDR3A error interrupt
212	HYPERLINK_0_INT	HyperLink 0 interrupt
213	EDMACC_0_ERRINT	EDMA3CC0 error interrupt
214	EDMACC_0_MPINT	EDMA3CC0 memory protection interrupt
215	EDMACC_0_TC_0_ERRINT	EDMA3CC0 TPTC0 error interrupt
216	EDMACC_0_TC_1_ERRINT	EDMA3CC0 TPTC1 error interrupt
217	EDMACC_1_ERRINT	EDMA3CC1 error interrupt
218	EDMACC_1_MPINT	EDMA3CC1 memory protection interrupt
219	EDMACC_1_TC_0_ERRINT	EDMA3CC1 TPTC0 error interrupt
220	EDMACC_1_TC_1_ERRINT	EDMA3CC1 TPTC1 error interrupt
221	EDMACC_1_TC_2_ERRINT	EDMA3CC1 TPTC2 error interrupt
222	EDMACC_1_TC_3_ERRINT	EDMA3CC1 TPTC3 error interrupt
223	EDMACC_2_ERRINT	EDMA3CC2 error interrupt
224	EDMACC_2_MPINT	EDMA3CC2 memory protection interrupt
225	EDMACC_2_TC_0_ERRINT	EDMA3CC2 TPTC0 error interrupt
226	EDMACC_2_TC_1_ERRINT	EDMA3CC2 TPTC1 error interrupt
227	EDMACC_2_TC_2_ERRINT	EDMA3CC2 TPTC2 error interrupt
228	EDMACC_2_TC_3_ERRINT	EDMA3CC2 TPTC3 error interrupt
229	EDMACC_3_ERRINT	EDMA3CC3 error interrupt
230	EDMACC_3_MPINT	EDMA3CC3 memory protection interrupt
231	EDMACC_3_TC_0_ERRINT	EDMA3CC3 TPTC0 error interrupt
232	EDMACC_3_TC_1_ERRINT	EDMA3CC3 TPTC1 error interrupt
233	EDMACC_4_ERRINT	EDMA3CC4 error interrupt
234	EDMACC_4_MPINT	EDMA3CC4 memory protection interrupt
235	EDMACC_4_TC_0_ERRINT	EDMA3CC4 TPTC0 error interrupt
236	EDMACC_4_TC_1_ERRINT	EDMA3CC4 TPTC1 error interrupt
237	QMSS_QUE_PEND_652	Navigator transmit queue pending event for indicated queue
238	QMSS_QUE_PEND_653	Navigator transmit queue pending event for indicated queue
239	QMSS_QUE_PEND_654	Navigator transmit queue pending event for indicated queue
240	QMSS_QUE_PEND_655	Navigator transmit queue pending event for indicated queue
241	QMSS_QUE_PEND_656	Navigator transmit queue pending event for indicated queue
242	QMSS_QUE_PEND_657	Navigator transmit queue pending event for indicated queue
243	QMSS_QUE_PEND_658	Navigator transmit queue pending event for indicated queue
244	QMSS_QUE_PEND_659	Navigator transmit queue pending event for indicated queue
245	QMSS_QUE_PEND_660	Navigator transmit queue pending event for indicated queue

Copyright © 2012–2017, Texas Instruments Incorporated

Table 8-26. CIC2 Event Inputs (Secondary Events for EDMA3CC0 and Hyperlinks) (continued)

EVENT NO.	EVENT NAME	DESCRIPTION
246	QMSS_QUE_PEND_661	Navigator transmit queue pending event for indicated queue
247	QMSS_QUE_PEND_662	Navigator transmit queue pending event for indicated queue
248	QMSS_QUE_PEND_663	Navigator transmit queue pending event for indicated queue
249	QMSS_QUE_PEND_664	Navigator transmit queue pending event for indicated queue
250	QMSS_QUE_PEND_665	Navigator transmit queue pending event for indicated queue
251	QMSS_QUE_PEND_666	Navigator transmit queue pending event for indicated queue
252	QMSS_QUE_PEND_667	Navigator transmit queue pending event for indicated queue
253	QMSS_QUE_PEND_668	Navigator transmit queue pending event for indicated queue
254	QMSS_QUE_PEND_669	Navigator transmit queue pending event for indicated queue
255	QMSS_QUE_PEND_670	Navigator transmit queue pending event for indicated queue
256	QMSS_QUE_PEND_671	Navigator transmit queue pending event for indicated queue
257	QMSS_QUE_PEND_8844	Navigator transmit queue pending event for indicated queue
258	QMSS_QUE_PEND_8845	Navigator transmit queue pending event for indicated queue
259	QMSS_QUE_PEND_8846	Navigator transmit queue pending event for indicated queue
260	QMSS_QUE_PEND_8847	Navigator transmit queue pending event for indicated queue
261	QMSS_QUE_PEND_8848	Navigator transmit queue pending event for indicated queue
262	QMSS_QUE_PEND_8849	Navigator transmit queue pending event for indicated queue
263	QMSS_QUE_PEND_8850	Navigator transmit queue pending event for indicated queue
264	QMSS_QUE_PEND_8851	Navigator transmit queue pending event for indicated queue
265	QMSS_QUE_PEND_8852	Navigator transmit queue pending event for indicated queue
266	QMSS_QUE_PEND_8853	Navigator transmit queue pending event for indicated queue
267	QMSS_QUE_PEND_8854	Navigator transmit queue pending event for indicated queue
268	QMSS_QUE_PEND_8855	Navigator transmit queue pending event for indicated queue
269	QMSS_QUE_PEND_8856	Navigator transmit queue pending event for indicated queue
270	QMSS_QUE_PEND_8857	Navigator transmit queue pending event for indicated queue
271	QMSS_QUE_PEND_8858	Navigator transmit queue pending event for indicated queue
272	QMSS_QUE_PEND_8859	Navigator transmit queue pending event for indicated queue
273	QMSS_QUE_PEND_8860	Navigator transmit queue pending event for indicated queue
274	QMSS_QUE_PEND_8861	Navigator transmit queue pending event for indicated queue
275	QMSS_QUE_PEND_8862	Navigator transmit queue pending event for indicated queue
276	QMSS_QUE_PEND_8863	Navigator transmit queue pending event for indicated queue
277	10GbE_LINK_INT0	10 Gigabit Ethernet subsystem MDIO interrupt (66AK2H14 only)
278	10GbE_LINK_INT1	10 Gigabit Ethernet subsystem MDIO interrupt (66AK2H14 only)
279	10GbE_USER_INT0	10 Gigabit Ethernet subsystem MDIO interrupt (66AK2H14 only)
280	10GbE_USER_INT1	10 Gigabit Ethernet subsystem MDIO interrupt (66AK2H14 only)
281	10GbE_MISC_INT	10 Gigabit Ethernet subsystem MDIO interrupt (66AK2H14 only)
282	10GbE_INT_PKTDMA_0	10 Gigabit Ethernet Packet DMA starvation interrupt
283	SEM_INT0	Semaphore interrupt
284	SEM_INT1	Semaphore interrupt
285	SEM_INT2	Semaphore interrupt
286	SEM_INT3	Semaphore interrupt
287	SEM_INT4	Semaphore interrupt
288	SEM_INT5	Semaphore interrupt
289	SEM_INT6	Semaphore interrupt
290	SEM_INT7	Semaphore interrupt
291	SEM_INT8	Semaphore interrupt
292	SEM_INT9	Semaphore interrupt

Copyright © 2012–2017, Texas Instruments Incorporated

Table 8-26. CIC2 Event Inputs (Secondary Events for EDMA3CC0 and Hyperlinks) (continued)

EVENT NO.	EVENT NAME	DESCRIPTION
293	SEM_INT10	Semaphore interrupt
294	SEM_INT11	Semaphore interrupt
295	SEM_INT12	Semaphore interrupt
296	SEM_INT13	Semaphore interrupt
297	SEM_INT14	Semaphore interrupt
298	SEM_INT15	Semaphore interrupt
299	SEM_ERR8	Semaphore error interrupt
300	SEM_ERR9	Semaphore error interrupt
301	SEM_ERR10	Semaphore error interrupt
302	SEM_ERR11	Semaphore error interrupt
303	SEM_ERR12	Semaphore error interrupt
304	SEM_ERR13	Semaphore error interrupt
305	SEM_ERR14	Semaphore error interrupt
306	SEM_ERR15	Semaphore error interrupt
307	DDR3_1_ERR	DDR3B error interrupt
308	HYPERLINK_1_INT	HyperLink 1 interrupt
309	Reserved	Reserved
310	Reserved	Reserved
311	Reserved	Reserved
312	Reserved	Reserved
313	Reserved	Reserved
314	Reserved	Reserved
315	Reserved	Reserved
316	Reserved	Reserved
317	Reserved	Reserved
318	Reserved	Reserved
319	Reserved	Reserved
320	Reserved	Reserved
321	Reserved	Reserved
322	Reserved	Reserved
323	Reserved	Reserved
324	Reserved	Reserved
325	Reserved	Reserved
326	Reserved	Reserved
327	Reserved	Reserved
328	Reserved	Reserved
329	Reserved	Reserved
330	Reserved	Reserved
331	Reserved	Reserved
332	Reserved	Reserved
333	Reserved	Reserved
334	Reserved	Reserved
335	Reserved	Reserved
336	Reserved	Reserved
337	Reserved	Reserved
338	Reserved	Reserved
339	Reserved	Reserved

Copyright © 2012–2017, Texas Instruments Incorporated

Table 8-26. CIC2 Event Inputs (Secondary Events for EDMA3CC0 and Hyperlinks) (continued)

EVENT NO.	EVENT NAME	DESCRIPTION
340	Reserved	Reserved
341	Reserved	Reserved
342	Reserved	Reserved
343	Reserved	Reserved
344	Reserved	Reserved
345	Reserved	Reserved
346	Reserved	Reserved
347	Reserved	Reserved
348	Reserved	Reserved
349	Reserved	Reserved
350	Reserved	Reserved
351	Reserved	Reserved
352	Reserved	Reserved
353	Reserved	Reserved
354	Reserved	Reserved
355	Reserved	Reserved
356	Reserved	Reserved
357	Reserved	Reserved
358	Reserved	Reserved
359	Reserved	Reserved
360	Reserved	Reserved
361	Reserved	Reserved
362	PSC_ALLINT	PSC interrupt
363	Reserved	Reserved
364	Reserved	Reserved
365	Reserved	Reserved
366	Reserved	Reserved
367	Reserved	Reserved
368	Reserved	Reserved
369	Reserved	Reserved
370	Reserved	Reserved
371	Reserved	Reserved
372	MPU_9_INT	MPU9 addressing violation interrupt and protection violation interrupt
373	MPU_10_INT	MPU10 addressing violation interrupt and protection violation interrupt
374	MPU_11_INT	MPU11 addressing violation interrupt and protection violation interrupt
375	TRACER_MSMC_4_INT	Tracer sliding time window interrupt for MSMC SRAM Bank 4
376	TRACER_MSMC_5_INT	Tracer sliding time window interrupt for MSMC SRAM Bank 4
377	TRACER_MSMC_6_INT	Tracer sliding time window interrupt for MSMC SRAM Bank 4
378	TRACER_MSMC_7_INT	Tracer sliding time window interrupt for MSMC SRAM Bank 4
379	TRACER_DDR_1_INT	Tracer sliding time window interrupt for DDR3B
380	Reserved	Reserved
381	Reserved	Reserved
382	Reserved	Reserved
383	Reserved	Reserved
384	TRACER_SPI_ROM_EMIF_INT	Tracer sliding time window interrupt for SPI/ROM/EMIF16 modules
385	Reserved	Reserved
386	Reserved	Reserved

Copyright © 2012–2017, Texas Instruments Incorporated

Table 8-26. CIC2 Event Inputs (Secondary Events for EDMA3CC0 and Hyperlinks) (continued)

EVENT NO.	EVENT NAME	DESCRIPTION
387	TIMER_8_INTL	Timer interrupt low
388	TIMER_8_INTH	Timer interrupt high
389	TIMER_9_INTL	Timer interrupt low
390	TIMER_9_INTH	Timer interrupt high
391	TIMER_10_INTL	Timer interrupt low
392	TIMER_10_INTH	Timer interrupt high
393	TIMER_11_INTL	Timer interrupt low
394	TIMER_11_INTH	Timer interrupt high
395	TIMER_14_INTL	Timer interrupt low
396	TIMER_14_INTH	Timer interrupt high
397	TIMER_15_INTL	Timer interrupt low
398	TIMER_15_INTH	Timer interrupt high
399	USB_INT00	USB interrupt
400	USB_INT04	USB interrupt
401	USB_INT05	USB interrupt
402	USB_INT06	USB interrupt
403	USB_INT07	USB interrupt
404	USB_INT08	USB interrupt
405	USB_INT09	USB interrupt
406	USB_INT10	USB interrupt
407	USB_INT11	USB interrupt
408	USB_MISCINT	USB miscellaneous interrupt
409	USB_OABSINT	USB OABS interrupt
410	Reserved	Reserved
411	Reserved	Reserved
412	Reserved	Reserved
413	Reserved	Reserved
414	Reserved	Reserved
415	Reserved	Reserved
416	Reserved	Reserved
417	Reserved	Reserved
418	Reserved	Reserved
419	Reserved	Reserved
420	Reserved	Reserved
421	Reserved	Reserved
422	Reserved	Reserved
423	Reserved	Reserved
424	Reserved	Reserved
425	Reserved	Reserved
426	Reserved	Reserved
427	Reserved	Reserved
428	Reserved	Reserved
429	Reserved	Reserved
430	Reserved	Reserved
431	Reserved	Reserved
432	Reserved	Reserved
433	Reserved	Reserved

Copyright © 2012–2017, Texas Instruments Incorporated

Table 8-26. CIC2 Event Inputs (Secondary Events for EDMA3CC0 and Hyperlinks) (continued)

EVENT NO.	EVENT NAME	DESCRIPTION
434	Reserved	Reserved
435	Reserved	Reserved
436	Reserved	Reserved
437	Reserved	Reserved
438	Reserved	Reserved
439	Reserved	Reserved
440	Reserved	Reserved
441	Reserved	Reserved
442	TETB_OVFLINT0	ETB0 overflow (emulation trace buffer)
443	TETB_UNFLINT0	ETB0 underflow
444	TETB_OVFLINT1	ETB1 overflow (emulation trace buffer)
445	TETB_UNFLINT1	ETB1 underflow
446	TETB_OVFLINT2	ETB2 overflow (emulation trace buffer)
447	TETB_UNFLINT2	ETB2 underflow
448	TETB_OVFLINT3	ETB3 overflow (emulation trace buffer)
449	TETB_UNFLINT3	ETB3 underflow
450	TETB_OVFLINT4	ETB4 overflow (emulation trace buffer)
451	TETB_UNFLINT4	ETB4 underflow
452	TETB_OVFLINT5	ETB5 overflow (emulation trace buffer)
453	TETB_UNFLINT5	ETB5 underflow
454	TETB_OVFLINT6	ETB6 overflow (emulation trace buffer)
455	TETB_UNFLINT6	ETB6 underflow
456	TETB_OVFLINT7	ETB7 overflow (emulation trace buffer)
457	TETB_UNFLINT7	ETB7 underflow
458	ARM_TBR_DMA	ARM trace buffer
459	Reserved	Reserved
460	Reserved	Reserved
461	Reserved	Reserved
462	Reserved	Reserved
463	GPIO_INT0	GPIO interrupt
464	GPIO_INT1	GPIO interrupt
465	GPIO_INT2	GPIO interrupt
466	GPIO_INT3	GPIO interrupt
467	GPIO_INT4	GPIO interrupt
468	GPIO_INT5	GPIO interrupt
469	GPIO_INT6	GPIO interrupt
470	GPIO_INT7	GPIO interrupt
471	IPC_GR0	IPC interrupt generation
472	IPC_GR1	IPC interrupt generation
473	IPC_GR2	IPC interrupt generation
474	IPC_GR3	IPC interrupt generation
475	IPC_GR4	IPC interrupt generation
476	IPC_GR5	IPC interrupt generation
477	IPC_GR6	IPC interrupt generation
478	IPC_GR7	IPC interrupt generation

Copyright © 2012–2017, Texas Instruments Incorporated

8.3.2 CIC Registers

This section includes the CIC memory map information and registers.

8.3.2.1 CIC0 Register Map

Table 8-27. CIC0 Registers

ADDRESS OFFSET	REGISTER MNEMONIC	REGISTER NAME
0x0	REVISION_REG	Revision Register
0x4	CONTROL_REG	Control Register
0xC	HOST_CONTROL_REG	Host Control Register
0x10	GLOBAL_ENABLE_HINT_REG	Global Host Int Enable Register
0x20	STATUS_SET_INDEX_REG	Status Set Index Register
0x24	STATUS_CLR_INDEX_REG	Status Clear Index Register
0x28	ENABLE_SET_INDEX_REG	Enable Set Index Register
0x2C	ENABLE_CLR_INDEX_REG	Enable Clear Index Register
0x34	HINT_ENABLE_SET_INDEX_REG	Host Int Enable Set Index Register
0x38	HINT_ENABLE_CLR_INDEX_REG	Host Int Enable Clear Index Register
0x200	RAW_STATUS_REG0	Raw Status Register 0
0x204	RAW_STATUS_REG1	Raw Status Register 1
0x208	RAW_STATUS_REG2	Raw Status Register 2
0x20C	RAW_STATUS_REG3	Raw Status Register 3
0x210	RAW_STATUS_REG4	Raw Status Register 4
0x214	RAW_STATUS_REG5	Raw Status Register 5
0x218	RAW_STATUS_REG6	Raw Status Register 6
0x21C	RAW_STATUS_REG7	Raw Status Register 7
0x220	RAW_STATUS_REG8	Raw Status Register 8
0x224	RAW_STATUS_REG9	Raw Status Register 9
0x228	RAW_STATUS_REG10	Raw Status Register 10
0x22C	RAW_STATUS_REG11	Raw Status Register 11
0x230	RAW_STATUS_REG12	Raw Status Register 12
0x234	RAW_STATUS_REG13	Raw Status Register 13
0x238	RAW_STATUS_REG14	Raw Status Register 14
0x23C	RAW_STATUS_REG15	Raw Status Register 15
0x280	ENA_STATUS_REG0	Enabled Status Register 0
0x284	ENA_STATUS_REG1	Enabled Status Register 1
0x288	ENA_STATUS_REG2	Enabled Status Register 2
0x28C	ENA_STATUS_REG3	Enabled Status Register 3
0x290	ENA_STATUS_REG4	Enabled Status Register 4
0x294	ENA_STATUS_REG5	Enabled Status Register 5
0x298	ENA_STATUS_REG6	Enabled Status Register 6
0x29C	ENA_STATUS_REG7	Enabled Status Register 7
0x2A0	ENA_STATUS_REG8	Enabled Status Register 8
0x2A4	ENA_STATUS_REG9	Enabled Status Register 9
0x2A8	ENA_STATUS_REG10	Enabled Status Register10
0x2AC	ENA_STATUS_REG11	Enabled Status Register 11
0x2B0	ENA_STATUS_REG12	Enabled Status Register 12
0x2B4	ENA_STATUS_REG13	Enabled Status Register 13
0x2B8	ENA_STATUS_REG14	Enabled Status Register 14
0x2BC	ENA_STATUS_REG15	Enabled Status Register 15

Copyright © 2012–2017, Texas Instruments Incorporated

Table 8-27. CIC0 Registers (continued)

ADDRESS OFFSET	REGISTER MNEMONIC	REGISTER NAME
0x300	ENABLE_REG0	Enable Register 0
0x304	ENABLE_REG1	Enable Register 1
0x308	ENABLE_REG2	Enable Register 2
0x30C	ENABLE_REG3	Enable Register 3
0x310	ENABLE_REG4	Enable Register 4
0x314	ENABLE_REG5	Enable Register 5
0x318	ENABLE_REG6	Enable Register 6
0x31C	ENABLE_REG7	Enable Register 7
0x320	ENABLE_REG8	Enable Register 8
0x324	ENABLE_REG9	Enable Register 9
0x328	ENABLE_REG10	Enable Register 10
0x32C	ENABLE_REG11	Enable Register 11
0x330	ENABLE_REG12	Enable Register 12
0x334	ENABLE_REG13	Enable Register 13
0x338	ENABLE_REG14	Enable Register 14
0x33C	ENABLE_REG15	Enable Register 15
0x380	ENABLE_CLR_REG0	Enable Clear Register 0
0x384	ENABLE_CLR_REG1	Enable Clear Register 1
0x388	ENABLE_CLR_REG2	Enable Clear Register 2
0x38C	ENABLE_CLR_REG3	Enable Clear Register 3
0x390	ENABLE_CLR_REG4	Enable Clear Register 4
0x394	ENABLE_CLR_REG5	Enable Clear Register 5
0x398	ENABLE_CLR_REG6	Enable Clear Register 6
0x39C	ENABLE_CLR_REG7	Enable Clear Register 7
0x3A0	ENABLE_CLR_REG8	Enable Clear Register 8
0x3A4	ENABLE_CLR_REG9	Enable Clear Register 9
0x3A8	ENABLE_CLR_REG10	Enable Clear Register 10
0x3AC	ENABLE_CLR_REG11	Enable Clear Register 11
0x3B0	ENABLE_CLR_REG12	Enable Clear Register 12
0x3B4	ENABLE_CLR_REG13	Enable Clear Register 13
0x3B8	ENABLE_CLR_REG14	Enable Clear Register 14
0x38C	ENABLE_CLR_REG15	Enable Clear Register 15
0x400	CH_MAP_REG0	Interrupt Channel Map Register for 0 to 0+3
0x404	CH_MAP_REG1	Interrupt Channel Map Register for 4 to 4+3
0x408	CH_MAP_REG2	Interrupt Channel Map Register for 8 to 8+3
0x40C	CH_MAP_REG3	Interrupt Channel Map Register for 12 to 12+3
0x410	CH_MAP_REG4	Interrupt Channel Map Register for 16 to 16+3
0x414	CH_MAP_REG5	Interrupt Channel Map Register for 20 to 20+3
0x418	CH_MAP_REG6	Interrupt Channel Map Register for 24 to 24+3
0x41C	CH_MAP_REG7	Interrupt Channel Map Register for 28 to 28+3
0x420	CH_MAP_REG8	Interrupt Channel Map Register for 32 to 32+3
0x424	CH_MAP_REG9	Interrupt Channel Map Register for 36 to 36+3
0x428	CH_MAP_REG10	Interrupt Channel Map Register for 40 to 40+3
0x42C	CH_MAP_REG11	Interrupt Channel Map Register for 44 to 44+3
0x430	CH_MAP_REG12	Interrupt Channel Map Register for 48 to 48+3
0x434	CH_MAP_REG13	Interrupt Channel Map Register for 52 to 52+3
0x438	CH_MAP_REG14	Interrupt Channel Map Register for 56 to 56+3

Copyright © 2012–2017, Texas Instruments Incorporated

Table 8-27. CIC0 Registers (continued)

ADDRESS OFFSET	REGISTER MNEMONIC	REGISTER NAME
0x43C	CH_MAP_REG15	Interrupt Channel Map Register for 60 to 60+3
0x440	CH_MAP_REG16	Interrupt Channel Map Register for 64 to 64+3
0x444	CH_MAP_REG17	Interrupt Channel Map Register for 68 to 68+3
0x448	CH_MAP_REG18	Interrupt Channel Map Register for 72 to 72+3
0x44C	CH_MAP_REG19	Interrupt Channel Map Register for 76 to 76+3
0x450	CH_MAP_REG20	Interrupt Channel Map Register for 80 to 80+3
0x454	CH_MAP_REG21	Interrupt Channel Map Register for 84 to 84+3
0x458	CH_MAP_REG22	Interrupt Channel Map Register for 88 to 88+3
0x45C	CH_MAP_REG23	Interrupt Channel Map Register for 92 to 92+3
0x460	CH_MAP_REG24	Interrupt Channel Map Register for 96 to 96+3
0x464	CH_MAP_REG25	Interrupt Channel Map Register for 100 to 100+3
0x468	CH_MAP_REG26	Interrupt Channel Map Register for 104 to 104+3
0x46C	CH_MAP_REG27	Interrupt Channel Map Register for 108 to 108+3
0x470	CH_MAP_REG28	Interrupt Channel Map Register for 112 to 112+3
0x474	CH_MAP_REG29	Interrupt Channel Map Register for 116 to 116+3
0x478	CH_MAP_REG30	Interrupt Channel Map Register for 120 to 120+3
0x47C	CH_MAP_REG31	Interrupt Channel Map Register for 124 to 124+3
0x480	CH_MAP_REG32	Interrupt Channel Map Register for 128 to 128+3
0x484	CH_MAP_REG33	Interrupt Channel Map Register for 132 to 132+3
0x488	CH_MAP_REG34	Interrupt Channel Map Register for 136 to 136+3
0x48C	CH_MAP_REG35	Interrupt Channel Map Register for 140 to 140+3
0x490	CH_MAP_REG36	Interrupt Channel Map Register for 144 to 144+3
0x494	CH_MAP_REG37	Interrupt Channel Map Register for 148 to 148+3
0x498	CH_MAP_REG38	Interrupt Channel Map Register for 152 to 152+3
0x49C	CH_MAP_REG39	Interrupt Channel Map Register for 156 to 156+3
0x4a0	CH_MAP_REG40	Interrupt Channel Map Register for 160 to 160+3
0x4a4	CH_MAP_REG41	Interrupt Channel Map Register for 164 to 164+3
0x4a8	CH_MAP_REG42	Interrupt Channel Map Register for 168 to 168+3
0x4AC	CH_MAP_REG43	Interrupt Channel Map Register for 172 to 172+3
0x4b0	CH_MAP_REG44	Interrupt Channel Map Register for 176 to 176+3
0x4b4	CH_MAP_REG45	Interrupt Channel Map Register for 180 to 180+3
0x4b8	CH_MAP_REG46	Interrupt Channel Map Register for 184 to 184+3
0x4BC	CH_MAP_REG47	Interrupt Channel Map Register for 188 to 188+3
0x4C0	CH_MAP_REG48	Interrupt Channel Map Register for 192 to 192+3
0x4C4	CH_MAP_REG49	Interrupt Channel Map Register for 196 to 196+3
0x4C8	CH_MAP_REG50	Interrupt Channel Map Register for 200 to 200+3
0x4CC	CH_MAP_REG51	Interrupt Channel Map Register for 204 to 204+3
0x4D0	CH_MAP_REG52	Interrupt Channel Map Register for 208 to 208+3
0x4D4	CH_MAP_REG53	Interrupt Channel Map Register for 212 to 212+3
0x4D8	CH_MAP_REG54	Interrupt Channel Map Register for 216 to 216+3
0x4DC	CH_MAP_REG55	Interrupt Channel Map Register for 220 to 220+3
0x4E0	CH_MAP_REG56	Interrupt Channel Map Register for 224 to 224+3
0x4E4	CH_MAP_REG57	Interrupt Channel Map Register for 228 to 228+3
0x4E8	CH_MAP_REG58	Interrupt Channel Map Register for 232 to 232+3
0x4FC	CH_MAP_REG59	Interrupt Channel Map Register for 236 to 236+3
0x4F0	CH_MAP_REG60	Interrupt Channel Map Register for 240 to 240+3
0x4F4	CH_MAP_REG61	Interrupt Channel Map Register for 244 to 244+3

Copyright © 2012–2017, Texas Instruments Incorporated

Table 8-27. CIC0 Registers (continued)

ADDRESS OFFSET	REGISTER MNEMONIC	REGISTER NAME
0x4F8	CH_MAP_REG62	Interrupt Channel Map Register for 248 to 248+3
0x4FC	CH_MAP_REG63	Interrupt Channel Map Register for 252 to 252+3
0x500	CH_MAP_REG64	Interrupt Channel Map Register for 256 to 256+3
0x504	CH_MAP_REG65	Interrupt Channel Map Register for 260 to 260+3
0x508	CH_MAP_REG66	Interrupt Channel Map Register for 264 to 264+3
0x50C	CH_MAP_REG67	Interrupt Channel Map Register for 268 to 268+3
0x510	CH_MAP_REG68	Interrupt Channel Map Register for 272 to 272+3
0x514	CH_MAP_REG69	Interrupt Channel Map Register for 276 to 276+3
0x518	CH_MAP_REG70	Interrupt Channel Map Register for 280 to 280+3
0x51C	CH_MAP_REG71	Interrupt Channel Map Register for 284 to 284+3
0x520	CH_MAP_REG72	Interrupt Channel Map Register for 288 to 288+3
0x524	CH_MAP_REG73	Interrupt Channel Map Register for 292 to 292+3
0x528	CH_MAP_REG74	Interrupt Channel Map Register for 296 to 296+3
0x52C	CH_MAP_REG75	Interrupt Channel Map Register for 300 to 300+3
0x520	CH_MAP_REG76	Interrupt Channel Map Register for 304 to 304+3
0x524	CH_MAP_REG77	Interrupt Channel Map Register for 308 to 308+3
0x528	CH_MAP_REG78	Interrupt Channel Map Register for 312 to 312+3
0x52C	CH_MAP_REG79	Interrupt Channel Map Register for 316 to 316+3
0x530	CH_MAP_REG80	Interrupt Channel Map Register for 320 to 320+3
0x534	CH_MAP_REG81	Interrupt Channel Map Register for 324 to 324+3
0x538	CH_MAP_REG82	Interrupt Channel Map Register for 328 to 328+3
0x53C	CH_MAP_REG83	Interrupt Channel Map Register for 332 to332+3
0x540	CH_MAP_REG84	Interrupt Channel Map Register for336 to 336+3
0x544	CH_MAP_REG85	Interrupt Channel Map Register for 340 to 340+3
0x548	CH_MAP_REG86	Interrupt Channel Map Register for 344 to 344+3
0x54C	CH_MAP_REG87	Interrupt Channel Map Register for 348 to 348+3
0x550	CH_MAP_REG88	Interrupt Channel Map Register for 352 to 352+3
0x554	CH_MAP_REG89	Interrupt Channel Map Register for 356 to 356+3
0x558	CH_MAP_REG90	Interrupt Channel Map Register for 360 to 360+3
0x55C	CH_MAP_REG91	Interrupt Channel Map Register for 364 to 364+3
0x560	CH_MAP_REG92	Interrupt Channel Map Register for 368 to 368+3
0x564	CH_MAP_REG93	Interrupt Channel Map Register for372 to 372+3
0x568	CH_MAP_REG94	Interrupt Channel Map Register for 376 to 376+3
0x56C	CH_MAP_REG95	Interrupt Channel Map Register for 380 to 380+3
0x570	CH_MAP_REG96	Interrupt Channel Map Register for 384 to 384+3
0x574	CH_MAP_REG97	Interrupt Channel Map Register for 388 to 388+3
0x578	CH_MAP_REG98	Interrupt Channel Map Register for 392 to 392+3
0x57C	CH_MAP_REG99	Interrupt Channel Map Register for 396 to 396+3
0x580	CH_MAP_REG100	Interrupt Channel Map Register for 400 to 400+3
0x584	CH_MAP_REG101	Interrupt Channel Map Register for 404 to 404+3
0x588	CH_MAP_REG102	Interrupt Channel Map Register for 408 to 408+3
0x58C	CH_MAP_REG103	Interrupt Channel Map Register for 412 to412+3
0x590	CH_MAP_REG104	Interrupt Channel Map Register for 416 to 416+3
0x594	CH_MAP_REG105	Interrupt Channel Map Register for 420 to 420+3
0x598	CH_MAP_REG106	Interrupt Channel Map Register for 424 to 424+3
0x59C	CH_MAP_REG107	Interrupt Channel Map Register for 428 to 428+3
0x5A0	CH_MAP_REG108	Interrupt Channel Map Register for 432 to 432+3

Copyright © 2012–2017, Texas Instruments Incorporated

Table 8-27. CIC0 Registers (continued)

ADDRESS OFFSET	REGISTER MNEMONIC	REGISTER NAME
0x5A4	CH_MAP_REG109	Interrupt Channel Map Register for 436 to 436+3
0x5A8	CH_MAP_REG110	Interrupt Channel Map Register for 440 to 440+3
0x5AC	CH_MAP_REG111	Interrupt Channel Map Register for 444 to 444+3
0x5B0	CH_MAP_REG112	Interrupt Channel Map Register for 448 to 448+3
0x5B4	CH_MAP_REG113	Interrupt Channel Map Register for 452 to 452+3
0x5B8	CH_MAP_REG114	Interrupt Channel Map Register for 456 to 456+3
0x5BC	CH_MAP_REG115	Interrupt Channel Map Register for 460 to 460+3
0x5C0	CH_MAP_REG116	Interrupt Channel Map Register for 464 to 464+3
0x5C4	CH_MAP_REG117	Interrupt Channel Map Register for 468 to 468+3
0x5C8	CH_MAP_REG118	Interrupt Channel Map Register for 472 to 472+3
0x5CC	CH_MAP_REG119	Interrupt Channel Map Register for 476 to 476+3
0x5D0	CH_MAP_REG120	Interrupt Channel Map Register for 480 to 480+3
0x5D4	CH_MAP_REG121	Interrupt Channel Map Register for 484 to 484+3
0x5D8	CH_MAP_REG122	Interrupt Channel Map Register for 488 to 488+3
0x5DC	CH_MAP_REG123	Interrupt Channel Map Register for 482 to 492+3
0x5E0	CH_MAP_REG124	Interrupt Channel Map Register for 496 to 496+3
0x5E4	CH_MAP_REG125	Interrupt Channel Map Register for 500 to 500+3
0x5E8	CH_MAP_REG126	Interrupt Channel Map Register for 504 to 504+3
0x5EC	CH_MAP_REG127	Interrupt Channel Map Register for 508 to 508+3
0x5F0	CH_MAP_REG128	Interrupt Channel Map Register for 512 to 512+3
0x5F4	CH_MAP_REG129	Interrupt Channel Map Register for 516 to 516+3
0x5F8	CH_MAP_REG130	Interrupt Channel Map Register for 520 to 520+3
0x5FC	CH_MAP_REG131	Interrupt Channel Map Register for 524 to 524+3
0x600	CH_MAP_REG132	Interrupt Channel Map Register for 528 to 528+3
0x604	CH_MAP_REG133	Interrupt Channel Map Register for 532 to 532+3
0x608	CH_MAP_REG134	Interrupt Channel Map Register for 536 to 536+3
0x60C	CH_MAP_REG135	Interrupt Channel Map Register for 540 to 540+3
0x610	CH_MAP_REG136	Interrupt Channel Map Register for 544 to 544+3
0x614	CH_MAP_REG137	Interrupt Channel Map Register for 548 to 548+3
0x618	CH_MAP_REG138	Interrupt Channel Map Register for 552 to 552+3
0x61C	CH_MAP_REG139	Interrupt Channel Map Register for 556 to 556+3
0x620	CH_MAP_REG140	Interrupt Channel Map Register for 560 to 560+3
0x624	CH_MAP_REG141	Interrupt Channel Map Register for 564 to 564+3
0x628	CH_MAP_REG142	Interrupt Channel Map Register for 568 to 568+3
0x62C	CH_MAP_REG143	Interrupt Channel Map Register for 572 to 572+3
0x630	CH_MAP_REG144	Interrupt Channel Map Register for 576 to 576+3
0x634	CH_MAP_REG145	Interrupt Channel Map Register for 580 to 580+3
0x638	CH_MAP_REG146	Interrupt Channel Map Register for 584 to 584+3
0x63C	CH_MAP_REG147	Interrupt Channel Map Register for 588 to 588+3
0x640	CH_MAP_REG148	Interrupt Channel Map Register for 592 to 592+3
0x644	CH_MAP_REG149	Interrupt Channel Map Register for 596 to 596+3
0x648	CH_MAP_REG150	Interrupt Channel Map Register for 600 to 600+3
0x64C	CH_MAP_REG151	Interrupt Channel Map Register for 604 to 604+3
0x650	CH_MAP_REG152	Interrupt Channel Map Register for 608 to 608+3
0x654	CH_MAP_REG153	Interrupt Channel Map Register for 612 to 612+3
0x658	CH_MAP_REG154	Interrupt Channel Map Register for 616 to 616+3
0x65C	CH_MAP_REG155	Interrupt Channel Map Register for 620 to 620+3

Copyright © 2012–2017, Texas Instruments Incorporated

Table 8-27. CIC0 Registers (continued)

ADDRESS OFFSET	REGISTER MNEMONIC	REGISTER NAME
0x660	CH_MAP_REG156	Interrupt Channel Map Register for 624 to 624+3
0x664	CH_MAP_REG157	Interrupt Channel Map Register for 628 to 628+3
0x668	CH_MAP_REG158	Interrupt Channel Map Register for 632 to 632+3
0x66C	CH_MAP_REG159	Interrupt Channel Map Register for 636 to 636+3
0x670	CH_MAP_REG160	Interrupt Channel Map Register for 640 to 640+3
0x674	CH_MAP_REG161	Interrupt Channel Map Register for 644 to 644+3
0x678	CH_MAP_REG162	Interrupt Channel Map Register for 648 to 648+3
0x67C	CH_MAP_REG163	Interrupt Channel Map Register for 652 to 652+3
0x680	CH_MAP_REG164	Interrupt Channel Map Register for 656 to 656+3
0x684	CH_MAP_REG165	Interrupt Channel Map Register for 660 to 660+3
0x688	CH_MAP_REG166	Interrupt Channel Map Register for 664 to 664+3
0x68C	CH_MAP_REG167	Interrupt Channel Map Register for 668 to 668+3
0x690	CH_MAP_REG168	Interrupt Channel Map Register for 672 to 672+3
0x694	CH_MAP_REG169	Interrupt Channel Map Register for 676 to 676+3
0x698	CH_MAP_REG170	Interrupt Channel Map Register for 680 to 680+3
0x69C	CH_MAP_REG171	Interrupt Channel Map Register for 684 to 684+3
0x800	HINT_MAP_REG0	Host Interrupt Map Register for 0 to 0+3
0x804	HINT_MAP_REG1	Host Interrupt Map Register for 4 to 4+3
0x808	HINT_MAP_REG2	Host Interrupt Map Register for 8 to 8+3
0x80C	HINT_MAP_REG3	Host Interrupt Map Register for 12 to 12+3
0x810	HINT_MAP_REG4	Host Interrupt Map Register for 16 to 16+3
0x814	HINT_MAP_REG5	Host Interrupt Map Register for 20 to 20+3
0x818	HINT_MAP_REG6	Host Interrupt Map Register for 24 to 24+3
0x81C	HINT_MAP_REG7	Host Interrupt Map Register for 28 to 28+3
0x820	HINT_MAP_REG8	Host Interrupt Map Register for 32 to 32+3
0x824	HINT_MAP_REG9	Host Interrupt Map Register for 36 to 36+3
0x828	HINT_MAP_REG10	Host Interrupt Map Register for 40 to 40+3
0x82C	HINT_MAP_REG11	Host Interrupt Map Register for 44 to 44+3
0x830	HINT_MAP_REG12	Host Interrupt Map Register for 48 to 48+3
0x834	HINT_MAP_REG13	Host Interrupt Map Register for 52 to 52+3
0x838	HINT_MAP_REG14	Host Interrupt Map Register for 56 to 56+3
0x83C	HINT_MAP_REG15	Host Interrupt Map Register for 60 to 60+3
0x840	HINT_MAP_REG16	Host Interrupt Map Register for 64 to 64+3
0x844	HINT_MAP_REG17	Host Interrupt Map Register for 68 to 68+3
0x848	HINT_MAP_REG18	Host Interrupt Map Register for 72 to 72+3
0x84C	HINT_MAP_REG19	Host Interrupt Map Register for 76 to 76+3
0x1500	ENABLE_HINT_REG0	Host Int Enable Register 0
0x1504	ENABLE_HINT_REG1	Host Int Enable Register 1
0x1508	ENABLE_HINT_REG2	Host Int Enable Register 2

8.3.2.2 CIC1 Register Map

Table 8-28. CIC1 Registers

ADDRESS OFFSET	REGISTER MNEMONIC	REGISTER NAME
0x0	REVISION_REG	Revision Register
0x10	GLOBAL_ENABLE_HINT_REG	Global Host Interrupt Enable Register

Copyright © 2012–2017, Texas Instruments Incorporated

Table 8-28. CIC1 Registers (continued)

ADDRESS OFFSET	REGISTER MNEMONIC	REGISTER NAME
0x20	STATUS_SET_INDEX_REG	Status Set Index Register
0x24	STATUS_CLR_INDEX_REG	Status Clear Index Register
0x28	ENABLE_SET_INDEX_REG	Enable Set Index Register
0x2C	ENABLE_CLR_INDEX_REG	Enable Clear Index Register
0x34	HINT_ENABLE_SET_INDEX_REG	Host Interrupt Enable Set Index Register
0x38	HINT_ENABLE_CLR_INDEX_REG	Host Interrupt Enable Clear Index Register
0x200	RAW_STATUS_REG0	Raw Status Register 0
0x204	RAW_STATUS_REG1	Raw Status Register 1
0x208	RAW_STATUS_REG2	Raw Status Register 2
0x20C	RAW_STATUS_REG3	Raw Status Register 3
0x210	RAW_STATUS_REG4	Raw Status Register 4
0x214	RAW_STATUS_REG5	Raw Status Register 5
0x218	RAW_STATUS_REG6	Raw Status Register 6
0x21C	RAW_STATUS_REG7	Raw Status Register 7
0x220	RAW_STATUS_REG8	Raw Status Register 8
0x224	RAW_STATUS_REG9	Raw Status Register 9
0x228	RAW_STATUS_REG10	Raw Status Register 10
0x22C	RAW_STATUS_REG11	Raw Status Register 11
0x230	RAW_STATUS_REG12	Raw Status Register 12
0x234	RAW_STATUS_REG13	Raw Status Register 13
0x238	RAW_STATUS_REG14	Raw Status Register 14
0x23C	RAW_STATUS_REG15	Raw Status Register 15
0x280	ENA_STATUS_REG0	Enabled Status Register 0
0x284	ENA_STATUS_REG1	Enabled Status Register 1
0x288	ENA_STATUS_REG2	Enabled Status Register 2
0x28C	ENA_STATUS_REG3	Enabled Status Register 3
0x290	ENA_STATUS_REG4	Enabled Status Register 4
0x294	ENA_STATUS_REG5	Enabled Status Register 5
0x298	ENA_STATUS_REG6	Enabled Status Register 6
0x29C	ENA_STATUS_REG7	Enabled Status Register 7
0x2A0	ENA_STATUS_REG8	Enabled Status Register 8
0x2A4	ENA_STATUS_REG9	Enabled Status Register 9
0x2A8	ENA_STATUS_REG10	Enabled Status Register10
0x2AC	ENA_STATUS_REG11	Enabled Status Register 11
0x2B0	ENA_STATUS_REG12	Enabled Status Register 12
0x2B4	ENA_STATUS_REG13	Enabled Status Register 13
0x2B8	ENA_STATUS_REG14	Enabled Status Register 14
0x2BC	ENA_STATUS_REG15	Enabled Status Register 15
0x300	ENABLE_REG0	Enable Register 0
0x304	ENABLE_REG1	Enable Register 1
0x308	ENABLE_REG2	Enable Register 2
0x30C	ENABLE_REG3	Enable Register 3
0x310	ENABLE_REG4	Enable Register 4
0x314	ENABLE_REG5	Enable Register 5
0x318	ENABLE_REG6	Enable Register 6
0x31C	ENABLE_REG7	Enable Register 7
0x320	ENABLE_REG8	Enable Register 8

Copyright © 2012–2017, Texas Instruments Incorporated

Table 8-28. CIC1 Registers (continued)

ADDRESS OFFSET	REGISTER MNEMONIC	REGISTER NAME
0x324	ENABLE_REG9	Enable Register 9
0x328	ENABLE_REG10	Enable Register 10
0x32C	ENABLE_REG11	Enable Register 11
0x330	ENABLE_REG12	Enable Register 12
0x334	ENABLE_REG13	Enable Register 13
0x338	ENABLE_REG14	Enable Register 14
0x33C	ENABLE_REG15	Enable Register 15
0x380	ENABLE_CLR_REG0	Enable Clear Register 0
0x384	ENABLE_CLR_REG1	Enable Clear Register 1
0x388	ENABLE_CLR_REG2	Enable Clear Register 2
0x38C	ENABLE_CLR_REG3	Enable Clear Register 3
0x390	ENABLE_CLR_REG4	Enable Clear Register 4
0x394	ENABLE_CLR_REG5	Enable Clear Register 5
0x398	ENABLE_CLR_REG6	Enable Clear Register 6
0x39C	ENABLE_CLR_REG7	Enable Clear Register 7
0x3A0	ENABLE_CLR_REG8	Enable Clear Register 8
0x3A4	ENABLE_CLR_REG9	Enable Clear Register 9
0x3A8	ENABLE_CLR_REG10	Enable Clear Register 10
0x3AC	ENABLE_CLR_REG11	Enable Clear Register 11
0x3B0	ENABLE_CLR_REG12	Enable Clear Register 12
0x3B4	ENABLE_CLR_REG13	Enable Clear Register 13
0x3B8	ENABLE_CLR_REG14	Enable Clear Register 14
0x38C	ENABLE_CLR_REG15	Enable Clear Register 15
0x400	CH_MAP_REG0	Interrupt Channel Map Register for 0 to 0+3
0x404	CH_MAP_REG1	Interrupt Channel Map Register for 4 to 4+3
0x408	CH_MAP_REG2	Interrupt Channel Map Register for 8 to 8+3
0x40C	CH_MAP_REG3	Interrupt Channel Map Register for 12 to 12+3
0x410	CH_MAP_REG4	Interrupt Channel Map Register for 16 to 16+3
0x414	CH_MAP_REG5	Interrupt Channel Map Register for 20 to 20+3
0x418	CH_MAP_REG6	Interrupt Channel Map Register for 24 to 24+3
0x41C	CH_MAP_REG7	Interrupt Channel Map Register for 28 to 28+3
0x420	CH_MAP_REG8	Interrupt Channel Map Register for 32 to 32+3
0x424	CH_MAP_REG9	Interrupt Channel Map Register for 36 to 36+3
0x428	CH_MAP_REG10	Interrupt Channel Map Register for 40 to 40+3
0x42C	CH_MAP_REG11	Interrupt Channel Map Register for 44 to 44+3
0x430	CH_MAP_REG12	Interrupt Channel Map Register for 48 to 48+3
0x434	CH_MAP_REG13	Interrupt Channel Map Register for 52 to 52+3
0x438	CH_MAP_REG14	Interrupt Channel Map Register for 56 to 56+3
0x43C	CH_MAP_REG15	Interrupt Channel Map Register for 60 to 60+3
0x440	CH_MAP_REG16	Interrupt Channel Map Register for 64 to 64+3
0x444	CH_MAP_REG17	Interrupt Channel Map Register for 68 to 68+3
0x448	CH_MAP_REG18	Interrupt Channel Map Register for 72 to 72+3
0x44C	CH_MAP_REG19	Interrupt Channel Map Register for 76 to 76+3
0x450	CH_MAP_REG20	Interrupt Channel Map Register for 80 to 80+3
0x454	CH_MAP_REG21	Interrupt Channel Map Register for 84 to 84+3
0x458	CH_MAP_REG22	Interrupt Channel Map Register for 88 to 88+3
0x45C	CH_MAP_REG23	Interrupt Channel Map Register for 92 to 92+3

Copyright © 2012–2017, Texas Instruments Incorporated

Table 8-28. CIC1 Registers (continued)

ADDRESS OFFSET	REGISTER MNEMONIC	REGISTER NAME
0x460	CH_MAP_REG24	Interrupt Channel Map Register for 96 to 96+3
0x464	CH_MAP_REG25	Interrupt Channel Map Register for 100 to 100+3
0x468	CH_MAP_REG26	Interrupt Channel Map Register for 104 to 104+3
0x46C	CH_MAP_REG27	Interrupt Channel Map Register for 108 to 108+3
0x470	CH_MAP_REG28	Interrupt Channel Map Register for 112 to 112+3
0x474	CH_MAP_REG29	Interrupt Channel Map Register for 116 to 116+3
0x478	CH_MAP_REG30	Interrupt Channel Map Register for 120 to 120+3
0x47C	CH_MAP_REG31	Interrupt Channel Map Register for 124 to 124+3
0x480	CH_MAP_REG32	Interrupt Channel Map Register for 128 to 128+3
0x484	CH_MAP_REG33	Interrupt Channel Map Register for 132 to 132+3
0x488	CH_MAP_REG34	Interrupt Channel Map Register for 136 to 136+3
0x48C	CH_MAP_REG35	Interrupt Channel Map Register for 140 to 140+3
0x490	CH_MAP_REG36	Interrupt Channel Map Register for 144 to 144+3
0x494	CH_MAP_REG37	Interrupt Channel Map Register for 148 to 148+3
0x498	CH_MAP_REG38	Interrupt Channel Map Register for 152 to 152+3
0x49C	CH_MAP_REG39	Interrupt Channel Map Register for 156 to 156+3
0x4A0	CH_MAP_REG40	Interrupt Channel Map Register for 160 to 160+3
0x4A4	CH_MAP_REG41	Interrupt Channel Map Register for 164 to 164+3
0x4A8	CH_MAP_REG42	Interrupt Channel Map Register for 168 to 168+3
0x4AC	CH_MAP_REG43	Interrupt Channel Map Register for 172 to 172+3
0x4B0	CH_MAP_REG44	Interrupt Channel Map Register for 176 to 176+3
0x4B4	CH_MAP_REG45	Interrupt Channel Map Register for 180 to 180+3
0x4B8	CH_MAP_REG46	Interrupt Channel Map Register for 184 to 184+3
0x4BC	CH_MAP_REG47	Interrupt Channel Map Register for 188 to 188+3
0x4C0	CH_MAP_REG48	Interrupt Channel Map Register for 192 to 192+3
0x4C4	CH_MAP_REG49	Interrupt Channel Map Register for 196 to 196+3
0x4C8	CH_MAP_REG50	Interrupt Channel Map Register for 200 to 200+3
0x4CC	CH_MAP_REG51	Interrupt Channel Map Register for 204 to 204+3
0x4D0	CH_MAP_REG52	Interrupt Channel Map Register for 208 to 208+3
0x4D4	CH_MAP_REG53	Interrupt Channel Map Register for 212 to 212+3
0x4D8	CH_MAP_REG54	Interrupt Channel Map Register for 216 to 216+3
0x4DC	CH_MAP_REG55	Interrupt Channel Map Register for 220 to 220+3
0x4E0	CH_MAP_REG56	Interrupt Channel Map Register for 224 to 224+3
0x4E4	CH_MAP_REG57	Interrupt Channel Map Register for 228 to 228+3
0x4E8	CH_MAP_REG58	Interrupt Channel Map Register for 232 to 232+3
0x4FC	CH_MAP_REG59	Interrupt Channel Map Register for 236 to 236+3
0x4F0	CH_MAP_REG60	Interrupt Channel Map Register for 240 to 240+3
0x4F4	CH_MAP_REG61	Interrupt Channel Map Register for 244 to 244+3
0x4F8	CH_MAP_REG62	Interrupt Channel Map Register for 248 to 248+3
0x4FC	CH_MAP_REG63	Interrupt Channel Map Register for 252 to 252+3
0x500	CH_MAP_REG64	Interrupt Channel Map Register for 256 to 256+3
0x504	CH_MAP_REG65	Interrupt Channel Map Register for 260 to 260+3
0x508	CH_MAP_REG66	Interrupt Channel Map Register for 264 to 264+3
0x50C	CH_MAP_REG67	Interrupt Channel Map Register for 268 to 268+3
0x510	CH_MAP_REG68	Interrupt Channel Map Register for 272 to 272+3
0x514	CH_MAP_REG69	Interrupt Channel Map Register for 276 to 276+3
0x518	CH_MAP_REG70	Interrupt Channel Map Register for 280 to 280+3

Copyright © 2012–2017, Texas Instruments Incorporated

Table 8-28. CIC1 Registers (continued)

ADDRESS OFFSET	REGISTER MNEMONIC	REGISTER NAME
0x51C	CH_MAP_REG71	Interrupt Channel Map Register for 284 to 284+3
0x520	CH_MAP_REG72	Interrupt Channel Map Register for 288 to 288+3
0x524	CH_MAP_REG73	Interrupt Channel Map Register for 292 to 292+3
0x528	CH_MAP_REG74	Interrupt Channel Map Register for 296 to 296+3
0x52C	CH_MAP_REG75	Interrupt Channel Map Register for 300 to 300+3
0x520	CH_MAP_REG76	Interrupt Channel Map Register for 304 to 304+3
0x524	CH_MAP_REG77	Interrupt Channel Map Register for 308 to 308+3
0x528	CH_MAP_REG78	Interrupt Channel Map Register for 312 to 312+3
0x52C	CH_MAP_REG79	Interrupt Channel Map Register for 316 to 316+3
0x530	CH_MAP_REG80	Interrupt Channel Map Register for 320 to 320+3
0x534	CH_MAP_REG81	Interrupt Channel Map Register for 324 to 324+3
0x538	CH_MAP_REG82	Interrupt Channel Map Register for 328 to 328+3
0x53C	CH_MAP_REG83	Interrupt Channel Map Register for 332 to332+3
0x540	CH_MAP_REG84	Interrupt Channel Map Register for336 to 336+3
0x544	CH_MAP_REG85	Interrupt Channel Map Register for 340 to 340+3
0x548	CH_MAP_REG86	Interrupt Channel Map Register for 344 to 344+3
0x54C	CH_MAP_REG87	Interrupt Channel Map Register for 348 to 348+3
0x550	CH_MAP_REG88	Interrupt Channel Map Register for 352 to 352+3
0x554	CH_MAP_REG89	Interrupt Channel Map Register for 356 to 356+3
0x558	CH_MAP_REG90	Interrupt Channel Map Register for 360 to 360+3
0x55C	CH_MAP_REG91	Interrupt Channel Map Register for 364 to 364+3
0x560	CH_MAP_REG92	Interrupt Channel Map Register for 368 to 368+3
0x564	CH_MAP_REG93	Interrupt Channel Map Register for372 to 372+3
0x568	CH_MAP_REG94	Interrupt Channel Map Register for 376 to 376+3
0x56C	CH_MAP_REG95	Interrupt Channel Map Register for 380 to 380+3
0x570	CH_MAP_REG96	Interrupt Channel Map Register for 384 to 384+3
0x574	CH_MAP_REG97	Interrupt Channel Map Register for 388 to 388+3
0x578	CH_MAP_REG98	Interrupt Channel Map Register for 392 to 392+3
0x57C	CH_MAP_REG99	Interrupt Channel Map Register for 396 to 396+3
0x580	CH_MAP_REG100	Interrupt Channel Map Register for 400 to 400+3
0x584	CH_MAP_REG101	Interrupt Channel Map Register for 404 to 404+3
0x588	CH_MAP_REG102	Interrupt Channel Map Register for 408 to 408+3
0x58C	CH_MAP_REG103	Interrupt Channel Map Register for 412 to412+3
0x590	CH_MAP_REG104	Interrupt Channel Map Register for 416 to 416+3
0x594	CH_MAP_REG105	Interrupt Channel Map Register for 420 to 420+3
0x598	CH_MAP_REG106	Interrupt Channel Map Register for 424 to 424+3
0x59C	CH_MAP_REG107	Interrupt Channel Map Register for 428 to 428+3
0x5A0	CH_MAP_REG108	Interrupt Channel Map Register for 432 to 432+3
0x5A4	CH_MAP_REG109	Interrupt Channel Map Register for 436 to 436+3
0x5A8	CH_MAP_REG110	Interrupt Channel Map Register for 440 to 440+3
0x5AC	CH_MAP_REG111	Interrupt Channel Map Register for 444 to 444+3
0x5B0	CH_MAP_REG112	Interrupt Channel Map Register for 448 to 448+3
0x5B4	CH_MAP_REG113	Interrupt Channel Map Register for 452 to 452+3
0x5B8	CH_MAP_REG114	Interrupt Channel Map Register for 456 to 456+3
0x5BC	CH_MAP_REG115	Interrupt Channel Map Register for 460 to 460+3
0x5C0	CH_MAP_REG116	Interrupt Channel Map Register for 464 to 464+3
0x5C4	CH_MAP_REG117	Interrupt Channel Map Register for 468 to 468+3

Copyright © 2012–2017, Texas Instruments Incorporated

Table 8-28. CIC1 Registers (continued)

ADDRESS OFFSET	REGISTER MNEMONIC	REGISTER NAME
0x5C8	CH_MAP_REG118	Interrupt Channel Map Register for 472 to 472+3
0x5CC	CH_MAP_REG119	Interrupt Channel Map Register for 476 to 476+3
0x5D0	CH_MAP_REG120	Interrupt Channel Map Register for 480 to 480+3
0x5D4	CH_MAP_REG121	Interrupt Channel Map Register for 484 to 484+3
0x5D8	CH_MAP_REG122	Interrupt Channel Map Register for 488 to 488+3
0x5DC	CH_MAP_REG123	Interrupt Channel Map Register for 482 to 492+3
0x5E0	CH_MAP_REG124	Interrupt Channel Map Register for 496 to 496+3
0x5E4	CH_MAP_REG125	Interrupt Channel Map Register for 500 to 500+3
0x5E8	CH_MAP_REG126	Interrupt Channel Map Register for 504 to 504+3
0x5EC	CH_MAP_REG127	Interrupt Channel Map Register for 508 to 508+3
0x5F0	CH_MAP_REG128	Interrupt Channel Map Register for 512 to 512+3
0x5F4	CH_MAP_REG129	Interrupt Channel Map Register for 516 to 516+3
0x5F8	CH_MAP_REG130	Interrupt Channel Map Register for 520 to 520+3
0x5FC	CH_MAP_REG131	Interrupt Channel Map Register for 524 to 524+3
0x600	CH_MAP_REG132	Interrupt Channel Map Register for 528 to 528+3
0x604	CH_MAP_REG133	Interrupt Channel Map Register for 532 to 532+3
0x608	CH_MAP_REG134	Interrupt Channel Map Register for 536 to 536+3
0x60C	CH_MAP_REG135	Interrupt Channel Map Register for 540 to 540+3
0x610	CH_MAP_REG136	Interrupt Channel Map Register for 544 to 544+3
0x614	CH_MAP_REG137	Interrupt Channel Map Register for 548 to 548+3
0x618	CH_MAP_REG138	Interrupt Channel Map Register for 552 to 552+3
0x61C	CH_MAP_REG139	Interrupt Channel Map Register for 556 to 556+3
0x620	CH_MAP_REG140	Interrupt Channel Map Register for 560 to 560+3
0x624	CH_MAP_REG141	Interrupt Channel Map Register for 564 to 564+3
0x628	CH_MAP_REG142	Interrupt Channel Map Register for 568 to 568+3
0x62C	CH_MAP_REG143	Interrupt Channel Map Register for 572 to 572+3
0x630	CH_MAP_REG144	Interrupt Channel Map Register for 576 to 576+3
0x634	CH_MAP_REG145	Interrupt Channel Map Register for 580 to 580+3
0x638	CH_MAP_REG146	Interrupt Channel Map Register for 584 to 584+3
0x63C	CH_MAP_REG147	Interrupt Channel Map Register for 588 to 588+3
0x640	CH_MAP_REG148	Interrupt Channel Map Register for 592 to 592+3
0x644	CH_MAP_REG149	Interrupt Channel Map Register for 596 to 596+3
0x648	CH_MAP_REG150	Interrupt Channel Map Register for 600 to 600+3
0x64C	CH_MAP_REG151	Interrupt Channel Map Register for 604 to 604+3
0x650	CH_MAP_REG152	Interrupt Channel Map Register for 608 to 608+3
0x654	CH_MAP_REG153	Interrupt Channel Map Register for 612 to 612+3
0x658	CH_MAP_REG154	Interrupt Channel Map Register for 616 to 616+3
0x65C	CH_MAP_REG155	Interrupt Channel Map Register for 620 to 620+3
0x660	CH_MAP_REG156	Interrupt Channel Map Register for 624 to 624+3
0x664	CH_MAP_REG157	Interrupt Channel Map Register for 628 to 628+3
0x668	CH_MAP_REG158	Interrupt Channel Map Register for 632 to 632+3
0x66C	CH_MAP_REG159	Interrupt Channel Map Register for 636 to 636+3
0x670	CH_MAP_REG160	Interrupt Channel Map Register for 640 to 640+3
0x674	CH_MAP_REG161	Interrupt Channel Map Register for 644 to 644+3
0x678	CH_MAP_REG162	Interrupt Channel Map Register for 648 to 648+3
0x67C	CH_MAP_REG163	Interrupt Channel Map Register for 652 to 652+3
0x680	CH_MAP_REG164	Interrupt Channel Map Register for 656 to 656+3

Copyright © 2012–2017, Texas Instruments Incorporated

Table 8-28. CIC1 Registers (continued)

ADDRESS OFFSET	REGISTER MNEMONIC	REGISTER NAME
0x684	CH_MAP_REG165	Interrupt Channel Map Register for 660 to 660+3
0x688	CH_MAP_REG166	Interrupt Channel Map Register for 664 to 664+3
0x68C	CH_MAP_REG167	Interrupt Channel Map Register for 668 to 668+3
0x690	CH_MAP_REG168	Interrupt Channel Map Register for 672 to 672+3
0x694	CH_MAP_REG169	Interrupt Channel Map Register for 676 to 676+3
0x698	CH_MAP_REG170	Interrupt Channel Map Register for 680 to 680+3
0x69C	CH_MAP_REG171	Interrupt Channel Map Register for 684 to 684+3
0x800	HINT_MAP_REG0	Host Interrupt Map Register for 0 to 0+3
0x804	HINT_MAP_REG1	Host Interrupt Map Register for 4 to 4+3
0x808	HINT_MAP_REG2	Host Interrupt Map Register for 8 to 8+3
0x80C	HINT_MAP_REG3	Host Interrupt Map Register for 12 to 12+3
0x810	HINT_MAP_REG4	Host Interrupt Map Register for 16 to 16+3
0x814	HINT_MAP_REG5	Host Interrupt Map Register for 20 to 20+3
0x818	HINT_MAP_REG6	Host Interrupt Map Register for 24 to 24+3
0x81C	HINT_MAP_REG7	Host Interrupt Map Register for 28 to 28+3
0x820	HINT_MAP_REG8	Host Interrupt Map Register for 32 to 32+3
0x824	HINT_MAP_REG9	Host Interrupt Map Register for 36 to 36+3
0x828	HINT_MAP_REG10	Host Interrupt Map Register for 40 to 40+3
0x82C	HINT_MAP_REG11	Host Interrupt Map Register for 44 to 44+3
0x830	HINT_MAP_REG12	Host Interrupt Map Register for 48 to 48+3
0x834	HINT_MAP_REG13	Host Interrupt Map Register for 52 to 52+3
0x1500	ENABLE_HINT_REG0	Host Interrupt Enable Register 0
0x1504	ENABLE_HINT_REG1	Host Interrupt Enable Register 1

Copyright © 2012–2017, Texas Instruments Incorporated

8.3.2.3 CIC2 Register Map

Table 8-29. CIC2 Registers

ADDRESS OFFSET	REGISTER MNEMONIC	REGISTER NAME
0x0	REVISION_REG	Revision Register
0x10	GLOBAL_ENABLE_HINT_REG	Global Host Int Enable Register
0x20	STATUS_SET_INDEX_REG	Status Set Index Register
0x24	STATUS_CLR_INDEX_REG	Status Clear Index Register
0x28	ENABLE_SET_INDEX_REG	Enable Set Index Register
0x2C	ENABLE_CLR_INDEX_REG	Enable Clear Index Register
0x34	HINT_ENABLE_SET_INDEX_REG	Host Int Enable Set Index Register
0x38	HINT_ENABLE_CLR_INDEX_REG	Host Int Enable Clear Index Register
0x200	RAW_STATUS_REG0	Raw Status Register 0
0x204	RAW_STATUS_REG1	Raw Status Register 1
0x208	RAW_STATUS_REG2	Raw Status Register 2
0x20C	RAW_STATUS_REG3	Raw Status Register 3
0x210	RAW_STATUS_REG4	Raw Status Register 4
0x214	RAW_STATUS_REG5	Raw Status Register 5
0x218	RAW_STATUS_REG6	Raw Status Register 6
0x21C	RAW_STATUS_REG7	Raw Status Register 7
0x220	RAW_STATUS_REG8	Raw Status Register 8
0x224	RAW_STATUS_REG9	Raw Status Register 9
0x228	RAW_STATUS_REG10	Raw Status Register 10
0x22C	RAW_STATUS_REG11	Raw Status Register 11
0x230	RAW_STATUS_REG12	Raw Status Register 12
0x234	RAW_STATUS_REG13	Raw Status Register 13
0x238	RAW_STATUS_REG14	Raw Status Register 14
0x23C	RAW_STATUS_REG15	Raw Status Register 15
0x280	ENA_STATUS_REG0	Enabled Status Register 0
0x284	ENA_STATUS_REG1	Enabled Status Register 1
0x288	ENA_STATUS_REG2	Enabled Status Register 2
0x28C	ENA_STATUS_REG3	Enabled Status Register 3
0x290	ENA_STATUS_REG4	Enabled Status Register 4
0x294	ENA_STATUS_REG5	Enabled Status Register 5
0x298	ENA_STATUS_REG6	Enabled Status Register 6
0x29C	ENA_STATUS_REG7	Enabled Status Register 7
0x2A0	ENA_STATUS_REG8	Enabled Status Register 8
0x2A4	ENA_STATUS_REG9	Enabled Status Register 9
0x2A8	ENA_STATUS_REG10	Enabled Status Register10
0x2AC	ENA_STATUS_REG11	Enabled Status Register 11
0x2B0	ENA_STATUS_REG12	Enabled Status Register 12
0x2B4	ENA_STATUS_REG13	Enabled Status Register 13
0x2B8	ENA_STATUS_REG14	Enabled Status Register 14
0x2BC	ENA_STATUS_REG15	Enabled Status Register 15
0x300	ENABLE_REG0	Enable Register 0
0x304	ENABLE_REG1	Enable Register 1
0x308	ENABLE_REG2	Enable Register 2
0x30C	ENABLE_REG3	Enable Register 3
0x310	ENABLE_REG4	Enable Register 4

Copyright © 2012–2017, Texas Instruments Incorporated

Table 8-29. CIC2 Registers (continued)

ADDRESS OFFSET	REGISTER MNEMONIC	REGISTER NAME
0x314	ENABLE_REG5	Enable Register 5
0x318	ENABLE_REG6	Enable Register 6
0x31C	ENABLE_REG7	Enable Register 7
0x320	ENABLE_REG8	Enable Register 8
0x324	ENABLE_REG9	Enable Register 9
0x328	ENABLE_REG10	Enable Register 10
0x32C	ENABLE_REG11	Enable Register 11
0x330	ENABLE_REG12	Enable Register 12
0x334	ENABLE_REG13	Enable Register 13
0x338	ENABLE_REG14	Enable Register 14
0x33C	ENABLE_REG15	Enable Register 15
0x380	ENABLE_CLR_REG0	Enable Clear Register 0
0x384	ENABLE_CLR_REG1	Enable Clear Register 1
0x388	ENABLE_CLR_REG2	Enable Clear Register 2
0x38C	ENABLE_CLR_REG3	Enable Clear Register 3
0x390	ENABLE_CLR_REG4	Enable Clear Register 4
0x394	ENABLE_CLR_REG5	Enable Clear Register 5
0x398	ENABLE_CLR_REG6	Enable Clear Register 6
0x39C	ENABLE_CLR_REG7	Enable Clear Register 7
0x3A0	ENABLE_CLR_REG8	Enable Clear Register 8
0x3A4	ENABLE_CLR_REG9	Enable Clear Register 9
0x3A8	ENABLE_CLR_REG10	Enable Clear Register 10
0x3AC	ENABLE_CLR_REG11	Enable Clear Register 11
0x3B0	ENABLE_CLR_REG12	Enable Clear Register 12
0x3B4	ENABLE_CLR_REG13	Enable Clear Register 13
0x3B8	ENABLE_CLR_REG14	Enable Clear Register 14
0x38C	ENABLE_CLR_REG15	Enable Clear Register 15
0x400	CH_MAP_REG0	Interrupt Channel Map Register for 0 to 0+3
0x404	CH_MAP_REG1	Interrupt Channel Map Register for 4 to 4+3
0x408	CH_MAP_REG2	Interrupt Channel Map Register for 8 to 8+3
0x40C	CH_MAP_REG3	Interrupt Channel Map Register for 12 to 12+3
0x410	CH_MAP_REG4	Interrupt Channel Map Register for 16 to 16+3
0x414	CH_MAP_REG5	Interrupt Channel Map Register for 20 to 20+3
0x418	CH_MAP_REG6	Interrupt Channel Map Register for 24 to 24+3
0x41C	CH_MAP_REG7	Interrupt Channel Map Register for 28 to 28+3
0x420	CH_MAP_REG8	Interrupt Channel Map Register for 32 to 32+3
0x424	CH_MAP_REG9	Interrupt Channel Map Register for 36 to 36+3
0x428	CH_MAP_REG10	Interrupt Channel Map Register for 40 to 40+3
0x42C	CH_MAP_REG11	Interrupt Channel Map Register for 44 to 44+3
0x430	CH_MAP_REG12	Interrupt Channel Map Register for 48 to 48+3
0x434	CH_MAP_REG13	Interrupt Channel Map Register for 52 to 52+3
0x438	CH_MAP_REG14	Interrupt Channel Map Register for 56 to 56+3
0x43C	CH_MAP_REG15	Interrupt Channel Map Register for 60 to 60+3
0x5C0	CH_MAP_REG116	Interrupt Channel Map Register for 464 to 464+3
0x5C4	CH_MAP_REG117	Interrupt Channel Map Register for 468 to 468+3
0x5C8	CH_MAP_REG118	Interrupt Channel Map Register for 472 to 472+3
0x5CC	CH_MAP_REG119	Interrupt Channel Map Register for 476 to 476+3

Copyright © 2012–2017, Texas Instruments Incorporated

Table 8-29. CIC2 Registers (continued)

ADDRESS OFFSET	REGISTER MNEMONIC	REGISTER NAME
0x5D0	CH_MAP_REG120	Interrupt Channel Map Register for 480 to 480+3
0x5D4	CH_MAP_REG121	Interrupt Channel Map Register for 484 to 484+3
0x5D8	CH_MAP_REG122	Interrupt Channel Map Register for 488 to 488+3
0x5DC	CH_MAP_REG123	Interrupt Channel Map Register for 482 to 492+3
0x5E0	CH_MAP_REG124	Interrupt Channel Map Register for 496 to 496+3
0x5E4	CH_MAP_REG125	Interrupt Channel Map Register for 500 to 500+3
0x5E8	CH_MAP_REG126	Interrupt Channel Map Register for 504 to 504+3
0x5EC	CH_MAP_REG127	Interrupt Channel Map Register for 508 to 508+3
0x5F0	CH_MAP_REG128	Interrupt Channel Map Register for 512 to 512+3
0x5F4	CH_MAP_REG129	Interrupt Channel Map Register for 516 to 516+3
0x5F8	CH_MAP_REG130	Interrupt Channel Map Register for 520 to 520+3
0x5FC	CH_MAP_REG131	Interrupt Channel Map Register for 524 to 524+3
0x600	CH_MAP_REG132	Interrupt Channel Map Register for 528 to 528+3
0x604	CH_MAP_REG133	Interrupt Channel Map Register for 532 to 532+3
0x608	CH_MAP_REG134	Interrupt Channel Map Register for 536 to 536+3
0x60C	CH_MAP_REG135	Interrupt Channel Map Register for 540 to 540+3
0x610	CH_MAP_REG136	Interrupt Channel Map Register for 544 to 544+3
0x614	CH_MAP_REG137	Interrupt Channel Map Register for 548 to 548+3
0x618	CH_MAP_REG138	Interrupt Channel Map Register for 552 to 552+3
0x61C	CH_MAP_REG139	Interrupt Channel Map Register for 556 to 556+3
0x620	CH_MAP_REG140	Interrupt Channel Map Register for 560 to 560+3
0x624	CH_MAP_REG141	Interrupt Channel Map Register for 564 to 564+3
0x628	CH_MAP_REG142	Interrupt Channel Map Register for 568 to 568+3
0x62C	CH_MAP_REG143	Interrupt Channel Map Register for 572 to 572+3
0x630	CH_MAP_REG144	Interrupt Channel Map Register for 576 to 576+3
0x634	CH_MAP_REG145	Interrupt Channel Map Register for 580 to 580+3
0x638	CH_MAP_REG146	Interrupt Channel Map Register for 584 to 584+3
0x63C	CH_MAP_REG147	Interrupt Channel Map Register for 588 to 588+3
0x640	CH_MAP_REG148	Interrupt Channel Map Register for 592 to 592+3
0x644	CH_MAP_REG149	Interrupt Channel Map Register for 596 to 596+3
0x648	CH_MAP_REG150	Interrupt Channel Map Register for 600 to 600+3
0x64C	CH_MAP_REG151	Interrupt Channel Map Register for 604 to 604+3
0x650	CH_MAP_REG152	Interrupt Channel Map Register for 608 to 608+3
0x654	CH_MAP_REG153	Interrupt Channel Map Register for 612 to 612+3
0x658	CH_MAP_REG154	Interrupt Channel Map Register for 616 to 616+3
0x65C	CH_MAP_REG155	Interrupt Channel Map Register for 620 to 620+3
0x660	CH_MAP_REG156	Interrupt Channel Map Register for 624 to 624+3
0x664	CH_MAP_REG157	Interrupt Channel Map Register for 628 to 628+3
0x668	CH_MAP_REG158	Interrupt Channel Map Register for 632 to 632+3
0x66C	CH_MAP_REG159	Interrupt Channel Map Register for 636 to 636+3
0x670	CH_MAP_REG160	Interrupt Channel Map Register for 640 to 640+3
0x674	CH_MAP_REG161	Interrupt Channel Map Register for 644 to 644+3
0x678	CH_MAP_REG162	Interrupt Channel Map Register for 648 to 648+3
0x67C	CH_MAP_REG163	Interrupt Channel Map Register for 652 to 652+3
0x680	CH_MAP_REG164	Interrupt Channel Map Register for 656 to 656+3
0x684	CH_MAP_REG165	Interrupt Channel Map Register for 660 to 660+3
0x688	CH_MAP_REG166	Interrupt Channel Map Register for 664 to 664+3

Copyright © 2012–2017, Texas Instruments Incorporated

Table 8-29. CIC2 Registers (continued)

ADDRESS OFFSET	REGISTER MNEMONIC	REGISTER NAME
0x68C	CH_MAP_REG167	Interrupt Channel Map Register for 668 to 668+3
0x690	CH_MAP_REG168	Interrupt Channel Map Register for 672 to 672+3
0x694	CH_MAP_REG169	Interrupt Channel Map Register for 676 to 676+3
0x698	CH_MAP_REG170	Interrupt Channel Map Register for 680 to 680+3
0x69C	CH_MAP_REG171	Interrupt Channel Map Register for 684 to 684+3
0x800	HINT_MAP_REG0	Host Interrupt Map Register for 0 to 0+3
0x804	HINT_MAP_REG1	Host Interrupt Map Register for 4 to 4+3
0x808	HINT_MAP_REG2	Host Interrupt Map Register for 8 to 8+3
0x80C	HINT_MAP_REG3	Host Interrupt Map Register for 12 to 12+3
0x810	HINT_MAP_REG4	Host Interrupt Map Register for 16 to 16+3
0x814	HINT_MAP_REG5	Host Interrupt Map Register for 20 to 20+3
0x818	HINT_MAP_REG6	Host Interrupt Map Register for 24 to 24+3
0x81C	HINT_MAP_REG7	Host Interrupt Map Register for 28 to 28+3
0x820	HINT_MAP_REG8	Host Interrupt Map Register for 32 to 32+3
0x824	HINT_MAP_REG9	Host Interrupt Map Register for 36 to 36+3
0x828	HINT_MAP_REG10	Host Interrupt Map Register for 40 to 40+3
0x82C	HINT_MAP_REG11	Host Interrupt Map Register for 44 to 44+3
0x830	HINT_MAP_REG12	Host Interrupt Map Register for 48 to 48+3
0x834	HINT_MAP_REG13	Host Interrupt Map Register for 52 to 52+3
0x838	HINT_MAP_REG14	Host Interrupt Map Register for 56 to 56+3
0x83C	HINT_MAP_REG15	Host Interrupt Map Register for 60 to 60+3
0x840	HINT_MAP_REG16	Host Interrupt Map Register for 63 to 63+3
0x844	HINT_MAP_REG17	Host Interrupt Map Register for 66 to 66+3
0x848	HINT_MAP_REG18	Host Interrupt Map Register for 68 to 68+3
0x84C	HINT_MAP_REG19	Host Interrupt Map Register for 72 to 72+3
0x850	HINT_MAP_REG20	Host Interrupt Map Register for 76 to 76+3
0x854	HINT_MAP_REG21	Host Interrupt Map Register for 80 to 80+3
0x858	HINT_MAP_REG22	Host Interrupt Map Register for 84 to 84+3
0x85C	HINT_MAP_REG23	Host Interrupt Map Register for 88 to 88+3
0x860	HINT_MAP_REG24	Host Interrupt Map Register for 92 to 92+3
0x864	HINT_MAP_REG25	Host Interrupt Map Register for 94 to 94+3
0x868	HINT_MAP_REG26	Host Interrupt Map Register for 96 to 96+3
0x86C	HINT_MAP_REG27	Host Interrupt Map Register for 100 to 100+3
0x1500	ENABLE_HINT_REG0	Host Int Enable Register 0
0x1504	ENABLE_HINT_REG1	Host Int Enable Register 1

8.3.3 Inter-Processor Register Map

Table 8-30. IPC Generation Registers (IPCGRx)

ADDRESS START	ADDRESS END	SIZE	REGISTER NAME	DESCRIPTION
0x02620200	0x02620203	4B	NMIGR0	NMI Event Generation Register for C66x CorePac0
0x02620204	0x02620207	4B	NMIGR1	NMI Event Generation Register for C66x CorePac1
0x02620208	0x0262020B	4B	NMIGR2	NMI Event Generation Register for C66x CorePac2
0x0262020C	0x0262020F	4B	NMIGR3	NMI Event Generation Register for C66x CorePac3
0x02620210	0x02620213	4B	NMIGR4	NMI Event Generation Register for C66x CorePac4
0x02620214	0x02620217	4B	NMIGR5	NMI Event Generation Register for C66x CorePac5
0x02620218	0x0262021B	4B	NMIGR6	NMI Event Generation Register for C66x CorePac6

Copyright © 2012–2017, Texas Instruments Incorporated

Table 8-30. IPC Generation Registers (IPCGRx) (continued)

ADDRESS START	ADDRESS END	SIZE	REGISTER NAME	DESCRIPTION
0x0262021C	0x0262021F	4B	NMIGR7	NMI Event Generation Register for C66x CorePac7
0x02620220	0x0262023F	32B	Reserved	Reserved
0x02620240	0x02620243	4B	IPCGR0	IPC Generation Register for C66x CorePac0
0x02620244	0x02620247	4B	IPCGR1	IPC Generation Register for C66x CorePac1
0x02620248	0x0262024B	4B	IPCGR2	IPC Generation Register for C66x CorePac2
0x0262024C	0x0262024F	4B	IPCGR3	IPC Generation Register for C66x CorePac3
0x02620250	0x02620253	4B	IPCGR4	IPC Generation Register for C66x CorePac4 (1)
0x02620254	0x02620257	4B	IPCGR5	IPC Generation Register for C66x CorePac5 (1)
0x02620258	0x0262025B	4B	IPCGR6	IPC Generation Register for C66x CorePac6 (1)
0x0262025C	0x0262025F	4B	IPCGR7	IPC Generation Register for C66x CorePac7 (1)
0x02620260	0x02620263	4B	IPCGR8	IPC Generation Register for ARM CorePac0
0x02620264	0x02620267	4B	IPCGR9	IPC Generation Register for ARM CorePac1
0x02620268	0x0262026B	4B	IPCGR10	IPC Generation Register for ARM CorePac2 (1)
0x0262026C	0x0262026F	4B	IPCGR11	IPC Generation Register for ARM CorePac3 (1)
0x02620270	0x0262027B	12B	Reserved	Reserved
0x0262027C	0x0262027F	4B	IPCGRH	IPC Generation Register for Host
0x02620280	0x02620283	4B	IPCAR0	IPC Acknowledgment Register for C66x CorePac0
0x02620284	0x02620287	4B	IPCAR1	IPC Acknowledgment Register for C66x CorePac1
0x02620288	0x0262028B	4B	IPCAR2	IPC Acknowledgment Register for C66x CorePac2
0x0262028C	0x0262028F	4B	IPCAR3	IPC Acknowledgment Register for C66x CorePac3
0x02620290	0x02620293	4B	IPCAR4	IPC Acknowledgment Register for C66x CorePac4 (1)
0x02620294	0x02620297	4B	IPCAR5	IPC Acknowledgment Register for C66x CorePac5 (1)
0x02620298	0x0262029B	4B	IPCAR6	IPC Acknowledgment Register for C66x CorePac6 (1)
0x0262029C	0x0262029F	4B	IPCAR7	IPC Acknowledgment Register for C66x CorePac7 (1)
0x026202A0	0x026202A3	4B	IPCAR8	IPC Acknowledgment Register for ARM CorePac0
0x026202A4	0x026202A7	4B	IPCAR9	IPC Acknowledgement Register for ARM CorePac1
0x026202A8	0x026202AB	4B	IPCAR10	IPC Acknowledgment Register for ARM CorePac2 (1)
0x026202AC	0x026202AF	4B	IPCAR11	IPC Acknowledgment Register for ARM CorePac3 (1)
0x026202B0	0x026202BB	12B	Reserved	Reserved
0x026202A0	0x026202BB	28B	Reserved	Reserved
0x026202BC	0x026202BF	4B	IPCARH	IPC Acknowledgment Register for host

(1) 66AK2H12/14 only.

8.3.4 $\overline{\text{NMI}}$ and $\overline{\text{LRESET}}$

The Nonmaskable Interrupts ($\overline{\text{NMI}}$) can be generated by chip-level registers and the $\overline{\text{LRESET}}$ can be generated by software writing into LPSC registers. $\overline{\text{LRESET}}$ and $\overline{\text{NMI}}$ can also be asserted by device pins or watchdog timers. One $\overline{\text{NMI}}$ pin and one $\overline{\text{LRESET}}$ pin are shared by all eight C66x CorePacs on the device. The CORESEL[3:0] pins can be configured to select between the eight C66x CorePacs available as shown in Table 8-31.

Table 8-31. $\overline{\text{LRESET}}$ and $\overline{\text{NMI}}$ Decoding

CORESEL[3:0] PIN INPUT	$\overline{\text{LRESET}}$ PIN INPUT	$\overline{\text{NMI}}$ PIN INPUT	$\overline{\text{LRESETNMIEN}}$ PIN INPUT	RESET MUX BLOCK OUTPUT
XXXX	X	X	1	No local reset or $\overline{\text{NMI}}$ assertion
0000	0	X	0	Assert local reset to C66x CorePac0
0001	0	X	0	Assert local reset to C66x CorePac1
0010	0	X	0	Assert local reset to C66x CorePac2
0011	0	X	0	Assert local reset to C66x CorePac3

Copyright © 2012–2017, Texas Instruments Incorporated

Table 8-31. $\overline{\text{LRESET}}$ and $\overline{\text{NMI}}$ Decoding (continued)

CORESEL[3:0] PIN INPUT	$\overline{\text{LRESET}}$ PIN INPUT	$\overline{\text{NMI}}$ PIN INPUT	$\overline{\text{LRESETNMIEN}}$ PIN INPUT	RESET MUX BLOCK OUTPUT
0100	0	X	0	Assert local reset to C66x CorePac4
0101	0	X	0	Assert local reset to C66x CorePac5
0110	0	X	0	Assert local reset to C66x CorePac6
0111	0	X	0	Assert local reset to C66x CorePac7
1XXX	0	X	0	Assert local reset to all C66x CorePacs
0000	1	1	0	Deassert local reset & $\overline{\text{NMI}}$ to C66x CorePac0
0001	1	1	0	Deassert local reset & $\overline{\text{NMI}}$ to C66x CorePac1
0010	1	1	0	Deassert local reset & $\overline{\text{NMI}}$ to C66x CorePac2
0011	1	1	0	Deassert local reset & $\overline{\text{NMI}}$ to C66x CorePac3
0100	1	1	0	Deassert local reset & $\overline{\text{NMI}}$ to C66x CorePac4 (1)
0101	1	1	0	Deassert local reset & $\overline{\text{NMI}}$ to C66x CorePac5 (1)
0110	1	1	0	Deassert local reset & $\overline{\text{NMI}}$ to C66x CorePac6 (1)
0111	1	1	0	Deassert local reset & $\overline{\text{NMI}}$ to C66x CorePac7 (1)
1XXX	1	1	0	Deassert local reset & $\overline{\text{NMI}}$ to all C66x CorePacs
0000	1	0	0	Assert $\overline{\text{NMI}}$ to C66x CorePac0
0001	1	0	0	Assert $\overline{\text{NMI}}$ to C66x CorePac1
0010	1	0	0	Assert $\overline{\text{NMI}}$ to C66x CorePac2
0011	1	0	0	Assert $\overline{\text{NMI}}$ to C66x CorePac3
0100	1	0	0	Assert $\overline{\text{NMI}}$ to C66x CorePac4 (1)
0101	1	0	0	Assert $\overline{\text{NMI}}$ to C66x CorePac5 (1)
0110	1	0	0	Assert $\overline{\text{NMI}}$ to C66x CorePac6 (1)
0111	1	0	0	Assert $\overline{\text{NMI}}$ to C66x CorePac7 (1)
1XXX	1	0	0	Assert $\overline{\text{NMI}}$ to all C66x CorePacs

(1) 66AK2H12/14 only.

8.4 Enhanced Direct Memory Access (EDMA3) Controller for 66AK2Hxx

The primary purpose of the EDMA3 is to service user-programmed data transfers between two memory-mapped slave endpoints on the device. The EDMA3 services software-driven paging transfers (for example, data movement between external memory and internal memory), performs sorting or subframe extraction of various data structures, services event driven peripherals, and offloads data transfers from the device C66x DSP CorePac or the ARM CorePac.

There are five EDMA channel controllers on the device:

- EDMA3CC0 has two transfer controllers: TPTC0 and TPTC1
- EDMA3CC1 has four transfer controllers: TPTC0, TPTC1, TPTC2, and TPTC3
- EDMA3CC2 has four transfer controllers: TPTC0, TPTC1, TPTC2, and TPTC3
- EDMA3CC3 has two transfer controllers: TPTC0 and TPTC1
- EDMA3CC4 has two transfer controllers: TPTC0 and TPTC1

In the context of this document, TPTCx is associated with EDMA3CCy, and is referred to as EDMA3CCy TPTCx. Each of the transfer controllers has a direct connection to the switch fabric. Section 9.2 lists the peripherals that can be accessed by the transfer controllers.

EDMA3CC0 is optimized to be used for transfers to/from/within the MSMC and DDR3A subsystems. The others are used for the remaining traffic.

Each EDMA3 channel controller includes the following features:

Copyright © 2012–2017, Texas Instruments Incorporated

- Fully orthogonal transfer description
  - 3 transfer dimensions:
    - Array (multiple bytes)
    - Frame (multiple arrays)
    - Block (multiple frames)
  - Single event can trigger transfer of array, frame, or entire block
  - Independent indexes on source and destination
- Flexible transfer definition:
  - Increment or FIFO transfer addressing modes
  - Linking mechanism allows for ping-pong buffering, circular buffering, and repetitive/continuous transfers, all with no CPU intervention
  - Chaining allows multiple transfers to execute with one event
- 512 PaRAM entries for all EDMA3CC
  - Used to define transfer context for channels
  - Each PaRAM entry can be used as a DMA entry, QDMA entry, or link entry
- 64 DMA channels for all EDMA3CC
  - Manually triggered (CPU writes to channel controller register)
  - External event triggered
  - Chain triggered (completion of one transfer triggers another)
- 8 Quick DMA (QDMA) channels per EDMA3CCx
  - Used for software-driven transfers
  - Triggered upon writing to a single PaRAM set entry
- Two transfer controllers and two event queues with programmable system-level priority for EDMA3CC0, EDMA3CC3 and EDMA3CC4
- Four transfer controllers and four event queues with programmable system-level priority for each of EDMA3CC1 and EDMA3CC2
- Interrupt generation for transfer completion and error conditions
- Debug visibility
  - Queue watermarking/threshold allows detection of maximum usage of event queues
  - Error and status recording to facilitate debug

8.4.1 EDMA3 Device-Specific Information

The EDMA supports two addressing modes: constant addressing and increment addressing mode. Constant addressing mode is applicable to a very limited set of use cases. For most applications increment mode can be used. On the SoC, the EDMA can use constant addressing mode only with the enhanced Viterbi decoder coprocessor (VCP) and the enhanced turbo decoder coprocessor (TCP). Constant addressing mode is not supported by any other peripheral or internal memory in the SoC. Note that increment mode is supported by all peripherals. For more information on these two addressing modes, see the *KeyStone Architecture Enhanced Direct Memory Access 3 (EDMA3) User's Guide*.

For the range of memory addresses that includes EDMA3 channel controller (EDMA3CC) control registers and EDMA3 transfer controller (TPTC) control registers, see Section Section 8.1. For memory offsets and other details on EDMA3CC and TPTC Control Register entries, see the *KeyStone Architecture Enhanced Direct Memory Access 3 (EDMA3) User's Guide*.

8.4.2 EDMA3 Channel Controller Configuration

Table 8-32 shows the configuration for each of the EDMA3 channel controllers present on the device.

Copyright © 2012–2017, Texas Instruments Incorporated

Table 8-32. EDMA3 Channel Controller Configuration

DESCRIPTION	EDMA3 CC0	EDMA3 CC1	EDMA3 CC2	EDMA3 CC3	EDMA3 CC4
Number of DMA channels in channel controller	64	64	64	64	64
Number of QDMA channels	8	8	8	8	8
Number of interrupt channels	64	64	64	64	64
Number of PaRAM set entries	512	512	512	512	512
Number of event queues	2	4	4	2	2
Number of transfer controllers	2	4	4	2	2
Memory protection existence	Yes	Yes	Yes	Yes	Yes
Number of memory protection and shadow regions	8	8	8	8	8

8.4.3 EDMA3 Transfer Controller Configuration

Each transfer controller on the device is designed differently based on considerations like performance requirements, system topology (like main TeraNet bus width, external memory bus width), and so forth. The parameters that determine the transfer controller configurations are:

- **FIFOSIZE:** Determines the size in bytes for the data FIFO that is the temporary buffer for the in-flight data. The data FIFO is where the read return data read by the TC read controller from the source endpoint is stored and subsequently written out to the destination endpoint by the TC write controller.
- **BUSWIDTH:** The width of the read and write data buses in bytes, for the TC read and write controller, respectively. This is typically equal to the bus width of the main TeraNet interface.
- **Default Burst Size (DBS):** The DBS is the maximum number of bytes per read/write command issued by a transfer controller.
- **DSTREGDEPTH:** This determines the number of destination FIFO register sets. The number of destination FIFO register sets for a transfer controller determines the maximum number of outstanding transfer requests.

All four parameters listed above are fixed by the design of the device.

Table 8-33 shows the configuration of each of the EDMA3 transfer controllers present on the device.

Table 8-33. EDMA3 Transfer Controller Configuration

	EDMA3 CC0/CC4		EDMA3 CC1				EDMA3 CC2				EDMA3CC3	
PARAMETER	TC0	TC1	TC0	TC1	TC2	TC3	TC0	TC1	TC2	TC3	TC0	TC1
FIFOSIZE	1024 bytes	1024 bytes	1024 bytes	1024 bytes	1024 bytes	1024 bytes	1024 bytes	1024 bytes	1024 bytes	1024 bytes	1024 bytes	1024 bytes
BUSWIDTH	32 bytes	32 bytes	16 bytes	16 bytes	16 bytes	16 bytes	16 bytes	16 bytes	16 bytes	16 bytes	16 bytes	16 bytes
DSTREGDEPTH	4 entries	4 entries	4 entries	4 entries	4 entries	4 entries	4 entries	4 entries	4 entries	4 entries	4 entries	4 entries
DBS	128 bytes	128 bytes	128 bytes	128 bytes	128 bytes	128 bytes	128 bytes	128 bytes	128 bytes	128 bytes	64 bytes	64 bytes

8.4.4 EDMA3 Channel Synchronization Events

The EDMA3 supports up to 64 DMA channels for all EDMA3CC that can be used to service system peripherals and to move data between system memories. DMA channels can be triggered by synchronization events generated by system peripherals. The following tables list the source of the synchronization event associated with each of the EDMA3CC DMA channels. On the 66AK2Hxx, the association of each synchronization event and DMA channel is fixed and cannot be reprogrammed.

For more detailed information on the EDMA3 module and how EDMA3 events are enabled, captured, processed, prioritized, linked, chained, and cleared, and so forth, see the *KeyStone Architecture Enhanced Direct Memory Access 3 (EDMA3) User's Guide*.

Copyright © 2012–2017, Texas Instruments Incorporated

Table 8-34. EDMA3CC0 Events for 66AK2Hxx

EVENT NO.	EVENT NAME	DESCRIPTION
0	TIMER_8_INTL	Timer interrupt low
1	TIMER_8_INTH	Timer interrupt high
2	TIMER_9_INTL	Timer interrupt low
3	TIMER_9_INTH	Timer interrupt high
4	TIMER_10_INTL	Timer interrupt low
5	TIMER_10_INTH	Timer interrupt high
6	TIMER_11_INTL	Timer interrupt low
7	TIMER_11_INTH	Timer interrupt high
8	CIC_2_OUT66	CIC2 Interrupt Controller output
9	CIC_2_OUT67	CIC2 Interrupt Controller output
10	CIC_2_OUT68	CIC2 Interrupt Controller output
11	CIC_2_OUT69	CIC2 Interrupt Controller output
12	CIC_2_OUT70	CIC2 Interrupt Controller output
13	CIC_2_OUT71	CIC2 Interrupt Controller output
14	CIC_2_OUT72	CIC2 Interrupt Controller output
15	CIC_2_OUT73	CIC2 Interrupt Controller output
16	GPIO_INT8	GPIO interrupt
17	GPIO_INT9	GPIO interrupt
18	GPIO_INT10	GPIO interrupt
19	GPIO_INT11	GPIO interrupt
20	GPIO_INT12	GPIO interrupt
21	GPIO_INT13	GPIO interrupt
22	GPIO_INT14	GPIO interrupt
23	GPIO_INT15	GPIO interrupt
24	TIMER_4_INTL	Timer interrupt low(1)
25	TIMER_4_INTH	Timer interrupt high(1)
26	TIMER_5_INTL	Timer interrupt low(1)
27	TIMER_5_INTH	Timer interrupt high(1)
28	TIMER_6_INTL	Timer interrupt low(1)
29	TIMER_6_INTH	Timer interrupt high(1)
30	TIMER_7_INTL	Timer interrupt low(1)
31	TIMER_7_INTH	Timer interrupt high(1)
32	GPIO_INT0	GPIO interrupt
33	GPIO_INT1	GPIO interrupt
34	GPIO_INT2	GPIO interrupt
35	GPIO_INT3	GPIO interrupt
36	GPIO_INT4	GPIO interrupt
37	GPIO_INT5	GPIO interrupt
38	GPIO_INT6	GPIO interrupt
39	GPIO_INT7	GPIO interrupt
40	TIMER_0_INTL	Timer interrupt low
41	TIMER_0_INTH	Timer interrupt high
42	TIMER_1_INTL	Timer interrupt low
43	TIMER_1_INTH	Timer interrupt high
44	TIMER_2_INTL	Timer interrupt low
45	TIMER_2_INTH	Timer interrupt high

(1) 66AK2H14 only.

Copyright © 2012–2017, Texas Instruments Incorporated

Table 8-34. EDMA3CC0 Events for 66AK2Hxx (continued)

EVENT NO.	EVENT NAME	DESCRIPTION
46	TIMER_3_INTL	Timer interrupt low
47	TIMER_3_INTH	Timer interrupt high
48	SRIO_INTDST0	SRIO interrupt
49	SRIO_INTDST1	SRIO interrupt
50	SRIO_INTDST2	SRIO interrupt
51	SRIO_INTDST3	SRIO interrupt
52	SRIO_INTDST4	SRIO interrupt
53	SRIO_INTDST5	SRIO interrupt
54	SRIO_INTDST6	SRIO interrupt
55	SRIO_INTDST7	SRIO interrupt
56	Reserved	Reserved
57	Reserved	Reserved
58	Reserved	Reserved
59	Reserved	Reserved
60	Reserved	Reserved
61	Reserved	Reserved
62	Reserved	Reserved
63	Reserved	Reserved

Table 8-35. EDMA3CC1 Events for 66AK2Hxx

EVENT NO.	EVENT NAME	DESCRIPTION
0	SPI_0_INT0	SPI0 interrupt
1	SPI_0_INT1	SPI0 interrupt
2	SPI_0_XEVT	SPI0 transmit event
3	SPI_0_REVT	SPI0 receive event
4	SEM_INT8	Semaphore interrupt
5	SEM_INT9	Semaphore interrupt
6	GPIO_INT0	GPIO interrupt
7	GPIO_INT1	GPIO interrupt
8	GPIO_INT2	GPIO interrupt
9	GPIO_INT3	GPIO interrupt
10	Reserved	Reserved
11	Reserved	Reserved
12	Reserved	Reserved
13	Reserved	Reserved
14	SEM_INT0	Semaphore interrupt
15	SEM_INT1	Semaphore interrupt
16	SEM_INT2	Semaphore interrupt
17	SEM_INT3	Semaphore interrupt
18	SEM_INT4	Semaphore interrupt
19	SEM_INT5	Semaphore interrupt
20	SEM_INT6	Semaphore interrupt
21	SEM_INT7	Semaphore interrupt
22	TIMER_8_INTL	Timer interrupt low
23	TIMER_8_INTH	Timer interrupt high
24	TIMER_9_INTL	Timer interrupt low

Copyright © 2012–2017, Texas Instruments Incorporated

Table 8-35. EDMA3CC1 Events for 66AK2Hxx (continued)

EVENT NO.	EVENT NAME	DESCRIPTION
25	TIMER_9_INTH	Timer interrupt high
26	TIMER_10_INTL	Timer interrupt low
27	TIMER_10_INTH	Timer interrupt high
28	TIMER_11_INTL	Timer interrupt low
29	TIMER_11_INTH	Timer interrupt high
30	TIMER_12_INTL	Timer interrupt low
31	TIMER_12_INTH	Timer interrupt high
32	TIMER_13_INTL	Timer interrupt low
33	TIMER_13_INTH	Timer interrupt high
34	TIMER_14_INTL	Timer interrupt low
35	TIMER_14_INTH	Timer interrupt high
36	TIMER_15_INTL	Timer interrupt low
37	TIMER_15_INTH	Timer interrupt high
38	SEM_INT10	Semaphore interrupt
39	SEM_INT11	Semaphore interrupt
40	SEM_INT12	Semaphore interrupt
41	SEM_INT13	Semaphore interrupt
42	CIC_2_OUT0	CIC2 Interrupt Controller output
43	CIC_2_OUT1	CIC2 Interrupt Controller output
44	CIC_2_OUT2	CIC2 Interrupt Controller output
45	CIC_2_OUT3	CIC2 Interrupt Controller output
46	CIC_2_OUT4	CIC2 Interrupt Controller output
47	CIC_2_OUT5	CIC2 Interrupt Controller output
48	CIC_2_OUT6	CIC2 Interrupt Controller output
49	CIC_2_OUT7	CIC2 Interrupt Controller output
50	CIC_2_OUT8	CIC2 Interrupt Controller output
51	Reserved	Reserved
52	Reserved	Reserved
53	I2C_0_REVT	I2C0 receive
54	I2C_0_XEVT	I2C0 transmit
55	CIC_2_OUT13	CIC2 Interrupt Controller output
56	CIC_2_OUT14	CIC2 Interrupt Controller output
57	CIC_2_OUT15	CIC2 Interrupt Controller output
58	CIC_2_OUT16	CIC2 Interrupt Controller output
59	CIC_2_OUT17	CIC2 Interrupt Controller output
60	CIC_2_OUT18	CIC2 Interrupt Controller output
61	CIC_2_OUT19	CIC2 Interrupt Controller output
62	Reserved	Reserved
63	Reserved	Reserved

Table 8-36. EDMA3CC2 Events for 66AK2Hxx

EVENT NO.	EVENT NAME	DESCRIPTION
0	Reserved	Reserved
1	Reserved	Reserved
2	Reserved	Reserved
3	Reserved	Reserved

Copyright © 2012–2017, Texas Instruments Incorporated

Table 8-36. EDMA3CC2 Events for 66AK2Hxx (continued)

EVENT NO.	EVENT NAME	DESCRIPTION
4	Reserved	Reserved
5	Reserved	Reserved
6	TETB_FULLINT4	TETB4 is full
7	TETB_HFULLINT4	TETB4 is half full
8	TETB_FULLINT5	TETB5 is full
9	TETB_HFULLINT5	TETB5 is half full
10	TETB_FULLINT6	TETB6 is full
11	TETB_HFULLINT6	TETB6 is half full
12	TETB_FULLINT7	TETB7 is full
13	TETB_HFULLINT7	TETB7 is half full
14	SRIO_INTDST0	SRIO interrupt
15	SRIO_INTDST1	SRIO interrupt
16	SRIO_INTDST2	SRIO interrupt
17	SRIO_INTDST3	SRIO interrupt
18	SRIO_INTDST4	SRIO interrupt
19	SRIO_INTDST5	SRIO interrupt
20	SRIO_INTDST6	SRIO interrupt
21	SRIO_INTDST7	SRIO interrupt
22	Reserved	Reserved
23	Reserved	Reserved
24	Reserved	Reserved
25	Reserved	Reserved
26	GPIO_INT0	GPIO interrupt
27	GPIO_INT1	GPIO interrupt
28	GPIO_INT2	GPIO interrupt
29	GPIO_INT3	GPIO interrupt
30	GPIO_INT4	GPIO interrupt
31	GPIO_INT5	GPIO interrupt
32	GPIO_INT6	GPIO interrupt
33	GPIO_INT7	GPIO interrupt
34	Reserved	Reserved
35	Reserved	Reserved
36	Reserved	Reserved
37	Reserved	Reserved
38	CIC_2_OUT48	CIC2 Interrupt Controller output
39	Reserved	Reserved
40	UART_0_URXEVT	UART0 receive event
41	UART_0_UTXEVT	UART0 transmit event
42	CIC_2_OUT22	CIC2 Interrupt Controller output
43	CIC_2_OUT23	CIC2 Interrupt Controller output
44	CIC_2_OUT24	CIC2 Interrupt Controller output
45	CIC_2_OUT25	CIC2 Interrupt Controller output
46	CIC_2_OUT26	CIC2 Interrupt Controller output
47	CIC_2_OUT27	CIC2 Interrupt Controller output
48	CIC_2_OUT28	CIC2 Interrupt Controller output
49	SPI_0_XEVT	SPI0 transmit event
50	SPI_0_REVT	SPI0 receive event

Copyright © 2012–2017, Texas Instruments Incorporated

Table 8-36. EDMA3CC2 Events for 66AK2Hxx (continued)

EVENT NO.	EVENT NAME	DESCRIPTION
51	Reserved	Reserved
52	Reserved	Reserved
53	Reserved	Reserved
54	Reserved	Reserved
55	Reserved	Reserved
56	Reserved	Reserved
57	Reserved	Reserved
58	Reserved	Reserved
59	Reserved	Reserved
60	Reserved	Reserved
61	Reserved	Reserved
62	Reserved	Reserved
63	Reserved	Reserved

Table 8-37. EDMA3CC3 Events for 66AK2Hxx

EVENT NO.	EVENT NAME	DESCRIPTION
0	SPI_2_INT0	SPI2 interrupt
1	SPI_2_INT1	SPI2 interrupt
2	SPI_2_XEVT	SPI2 transmit event
3	SPI_2_REVT	SPI2 receive event
4	I2C_2_REVT	I2C2 receive
5	I2C_2_XEVT	I2C2 transmit
6	UART_1_URXEVT	UART1 receive event
7	UART_1_UTXEVT	UART1 transmit event
8	SPI_1_INT0	SPI1 interrupt
9	SPI_1_INT1	SPI1 interrupt
10	SPI_1_XEVT	SPI1 transmit event
11	SPI_1_REVT	SPI1 receive event
12	I2C_0_REVT	I2C0 receive
13	I2C_0_XEVT	I2C0 transmit
14	I2C_1_REVT	I2C1 receive
15	I2C_1_XEVT	I2C1 transmit
16	SRIO_INTDST0	SRIO interrupt
17	SRIO_INTDST1	SRIO interrupt
18	SRIO_INTDST2	SRIO interrupt
19	SRIO_INTDST3	SRIO interrupt
20	SRIO_INTDST4	SRIO interrupt
21	SRIO_INTDST5	SRIO interrupt
22	SRIO_INTDST6	SRIO interrupt
23	SRIO_INTDST7	SRIO interrupt
24	Reserved	Reserved
25	Reserved	Reserved
26	Reserved	Reserved
27	Reserved	Reserved
28	Reserved	Reserved
29	Reserved	Reserved

Copyright © 2012–2017, Texas Instruments Incorporated

Table 8-37. EDMA3CC3 Events for 66AK2Hxx (continued)

EVENT NO.	EVENT NAME	DESCRIPTION
30	Reserved	Reserved
31	Reserved	Reserved
32	TETB_FULLINT0	TETB0 is full
33	TETB_HFULLINT0	TETB0 is half full
34	TETB_FULLINT1	TETB1 is full
35	TETB_HFULLINT1	TETB1 is half full
36	TETB_FULLINT2	TETB2 is full
37	TETB_HFULLINT2	TETB2 is half full
38	TETB_FULLINT3	TETB3 is full
39	TETB_HFULLINT3	TETB3 is half full
40	Reserved	Reserved
41	Reserved	Reserved
42	Reserved	Reserved
43	Reserved	Reserved
44	Reserved	Reserved
45	Reserved	Reserved
46	Reserved	Reserved
47	Reserved	Reserved
48	Reserved	Reserved
49	Reserved	Reserved
50	Reserved	Reserved
51	Reserved	Reserved
52	Reserved	Reserved
53	Reserved	Reserved
54	Reserved	Reserved
55	Reserved	Reserved
56	CIC_2_OUT57	CIC2 Interrupt Controller output
57	CIC_2_OUT50	CIC2 Interrupt Controller output
58	CIC_2_OUT51	CIC2 Interrupt Controller output
59	CIC_2_OUT52	CIC2 Interrupt Controller output
60	CIC_2_OUT53	CIC2 Interrupt Controller output
61	CIC_2_OUT54	CIC2 Interrupt Controller output
62	CIC_2_OUT55	CIC2 Interrupt Controller output
63	CIC_2_OUT56	CIC2 Interrupt Controller output

Table 8-38. EDMA3CC4 Events for 66AK2Hxx

EVENT NO.	EVENT NAME	DESCRIPTION
0	GPIO_INT16	GPIO interrupt
1	GPIO_INT17	GPIO interrupt
2	GPIO_INT18	GPIO interrupt
3	GPIO_INT19	GPIO interrupt
4	GPIO_INT20	GPIO interrupt
5	GPIO_INT21	GPIO interrupt
6	GPIO_INT22	GPIO interrupt
7	GPIO_INT23	GPIO interrupt
8	Reserved	Reserved

Copyright © 2012–2017, Texas Instruments Incorporated

Table 8-38. EDMA3CC4 Events for 66AK2Hxx (continued)

EVENT NO.	EVENT NAME	DESCRIPTION
9	Reserved	Reserved
10	Reserved	Reserved
11	Reserved	Reserved
12	Reserved	Reserved
13	Reserved	Reserved
14	Reserved	Reserved
15	Reserved	Reserved
16	Reserved	Reserved
17	Reserved	Reserved
18	Reserved	Reserved
19	Reserved	Reserved
20	Reserved	Reserved
21	Reserved	Reserved
22	Reserved	Reserved
23	Reserved	Reserved
24	TIMER_8_INTL	Timer interrupt low
25	TIMER_8_INTH	Timer interrupt high
26	TIMER_14_INTL	Timer interrupt low
27	TIMER_14_INTH	Timer interrupt high
28	TIMER_15_INTL	Timer interrupt low
29	TIMER_15_INTH	Timer interrupt high
30	DBGTBR_DMAINT	Debug trace buffer (TBR) DMA event
31	ARM_TBR_DMA	ARM trace buffer (TBR) DMA event
32	QMSS_QUE_PEND_658	Navigator transmit queue pending event for indicated queue
33	QMSS_QUE_PEND_659	Navigator transmit queue pending event for indicated queue
34	QMSS_QUE_PEND_660	Navigator transmit queue pending event for indicated queue
35	QMSS_QUE_PEND_661	Navigator transmit queue pending event for indicated queue
36	QMSS_QUE_PEND_662	Navigator transmit queue pending event for indicated queue
37	QMSS_QUE_PEND_663	Navigator transmit queue pending event for indicated queue
38	QMSS_QUE_PEND_664	Navigator transmit queue pending event for indicated queue
39	QMSS_QUE_PEND_665	Navigator transmit queue pending event for indicated queue
40	QMSS_QUE_PEND_8736	Navigator transmit queue pending event for indicated queue
41	QMSS_QUE_PEND_8737	Navigator transmit queue pending event for indicated queue
42	QMSS_QUE_PEND_8738	Navigator transmit queue pending event for indicated queue
43	QMSS_QUE_PEND_8739	Navigator transmit queue pending event for indicated queue
44	QMSS_QUE_PEND_8740	Navigator transmit queue pending event for indicated queue
45	QMSS_QUE_PEND_8741	Navigator transmit queue pending event for indicated queue
46	QMSS_QUE_PEND_8742	Navigator transmit queue pending event for indicated queue
47	QMSS_QUE_PEND_8743	Navigator transmit queue pending event for indicated queue
48	ARM_NCNTVIRQ3	ARM virtual timer interrupt for core 3
49	ARM_NCNTVIRQ2	ARM virtual timer interrupt for core 2
50	ARM_NCNTVIRQ1	ARM virtual timer interrupt for core 1
51	ARM_NCNTVIRQ0	ARM virtual timer interrupt for core 0
52	ARM_NCNTPNSIRQ3	ARM non secure timer interrupt for core 3
53	ARM_NCNTPNSIRQ2	ARM non secure timer interrupt for core 2
54	ARM_NCNTPNSIRQ1	ARM non secure timer interrupt for core 1
55	ARM_NCNTPNSIRQ0	ARM non secure timer interrupt for core 0

Copyright © 2012–2017, Texas Instruments Incorporated

Table 8-38. EDMA3CC4 Events for 66AK2Hxx (continued)

EVENT NO.	EVENT NAME	DESCRIPTION
56	CIC_2_OUT82	CIC2 Interrupt Controller output
57	CIC_2_OUT83	CIC2 Interrupt Controller output
58	CIC_2_OUT84	CIC2 Interrupt Controller output
59	CIC_2_OUT85	CIC2 Interrupt Controller output
60	CIC_2_OUT86	CIC2 Interrupt Controller output
61	CIC_2_OUT87	CIC2 Interrupt Controller output
62	CIC_2_OUT88	CIC2 Interrupt Controller output
63	CIC_2_OUT89	CIC2 Interrupt Controller output

Copyright © 2012–2017, Texas Instruments Incorporated

9 System Interconnect

On the KeyStone II devices, the C66x CorePac, the EDMA3 transfer controllers and the system peripherals are interconnected through the TeraNets, which are nonblocking switch fabrics enabling fast and contention-free internal data movement. The TeraNets provide low-latency, concurrent data transfers between master peripherals and slave peripherals. The TeraNets also allow for seamless arbitration between the system masters when accessing system slaves.

The ARM CorePac is connected to the MSMC and the debug subsystem directly, and to other masters via the TeraNets. Through the MSMC, the ARM CorePacs can be interconnected to DDR3A and TeraNet 3_A, which allows the ARM CorePacs to access to the peripheral buses:

- TeraNet 3P_A for peripheral configuration
- TeraNet 6P_A for ARM
- Boot ROM
- TeraNet 3_C for DDR3B

9.1 Internal Buses and Switch Fabrics

The C66x CorePacs, the ARM CorePacs, the EDMA3 traffic controllers, and the various system peripherals can be classified into two categories: masters and slaves.

- **Masters** are capable of initiating read and write transfers in the system and do not rely on the EDMA3 for their data transfers.
- **Slaves** on the other hand rely on the masters to perform transfers to and from them.

Examples of masters include the EDMA3 traffic controllers and network coprocessor packet DMA.

Examples of slaves include the SPI, UART, and I^2C.

The masters and slaves in the device communicate through the TeraNet (switch fabric). The device contains two types of switch fabric:

- **Data** TeraNet is a high-throughput interconnect mainly used to move data across the system
- **Configuration** TeraNet is mainly used to access peripheral registers

Some peripherals have both a data bus and a configuration bus interface, while others only have one type of interface. Furthermore, the bus interface width and speed varies from peripheral to peripheral.

Note that the data TeraNet also connects to the configuration TeraNet.

9.2 Switch Fabric Connections Matrix - Data Space

Figure 9-1, Figure 9-2, Figure 9-3, and Figure 9-4 show the connections between masters and slaves through various sections of the TeraNet.

Copyright © 2012–2017, Texas Instruments Incorporated

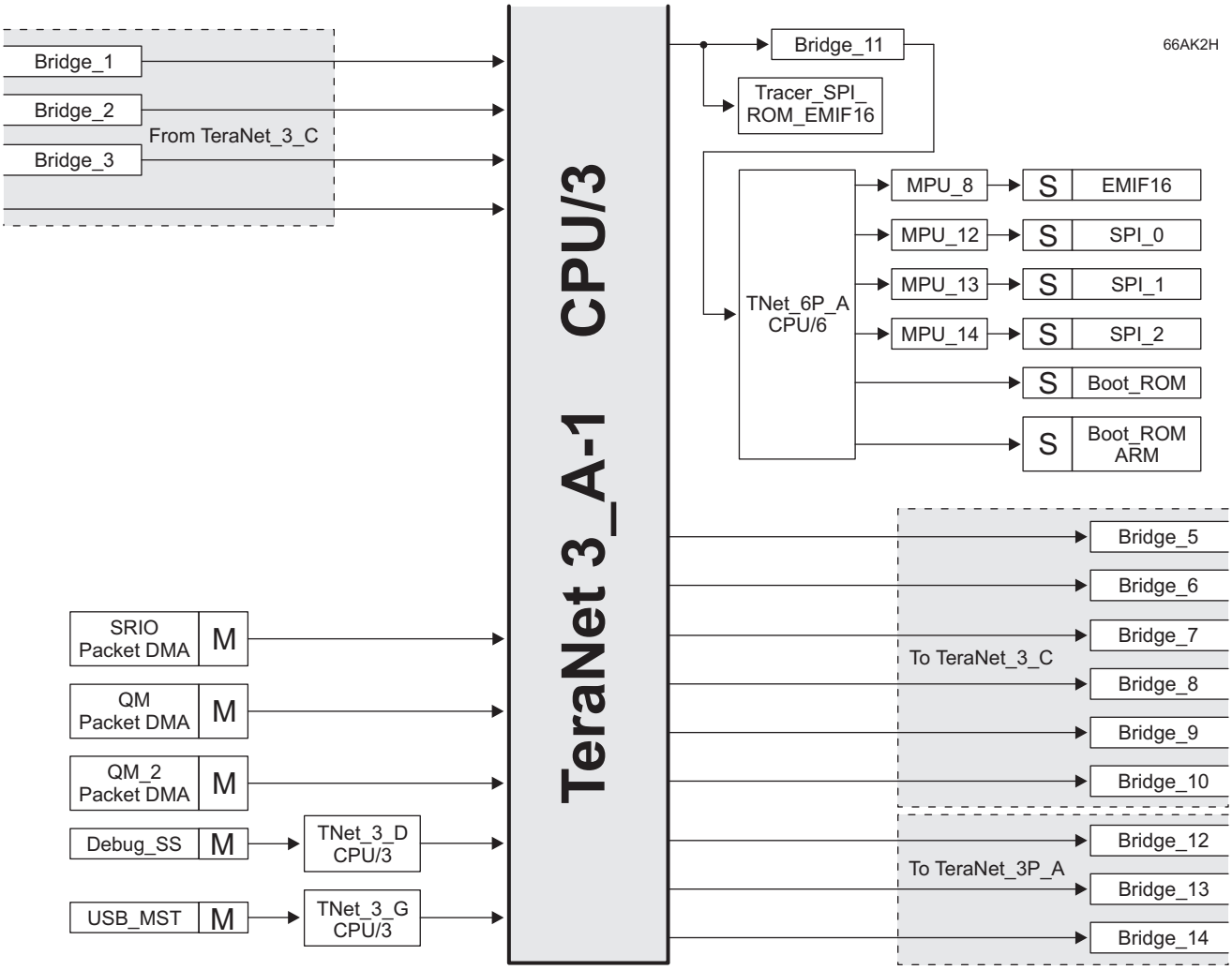

Figure 9-1. TeraNet 3_A-1

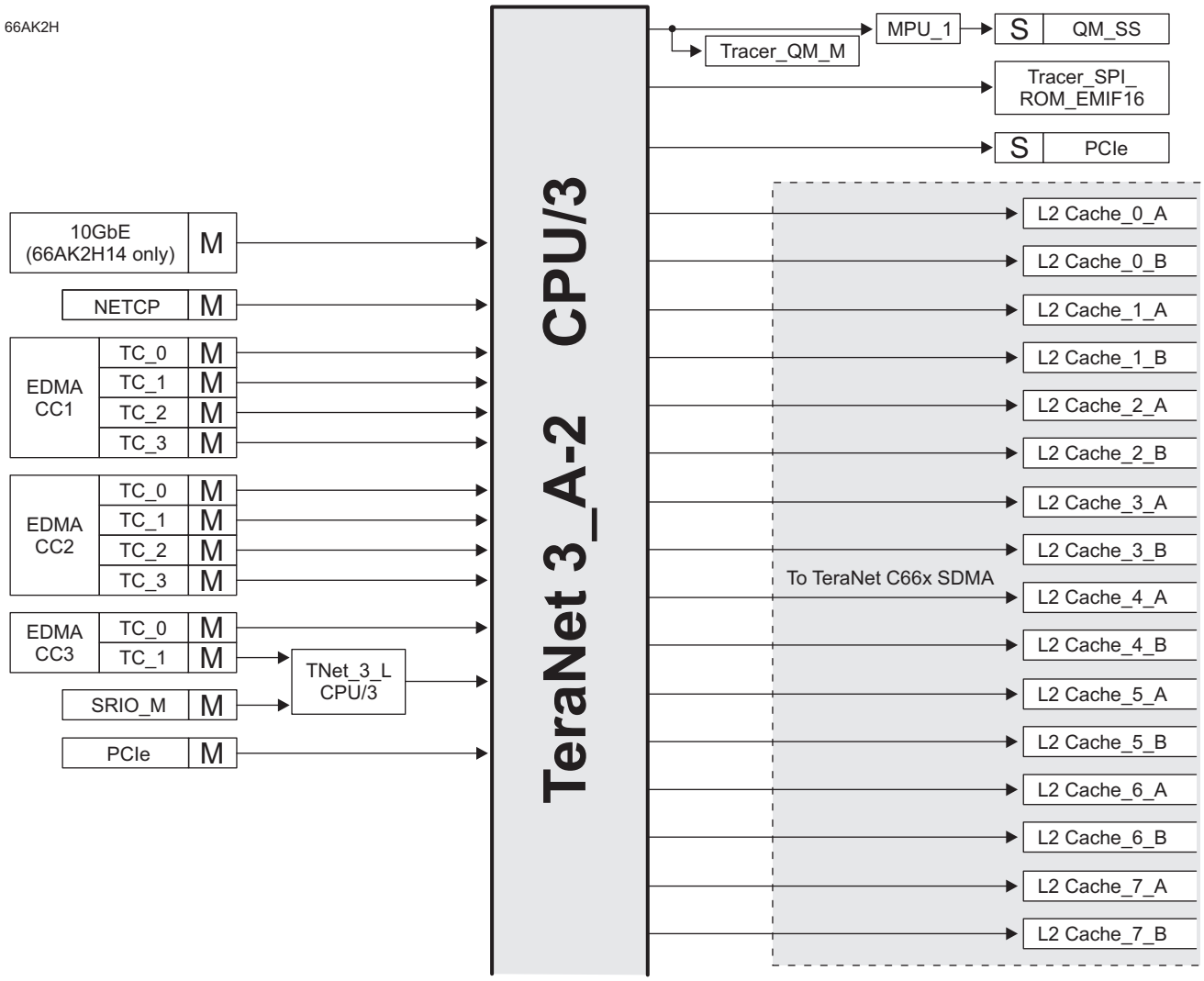

Figure 9-2. TeraNet 3_A-2

Copyright © 2012–2017, Texas Instruments Incorporated

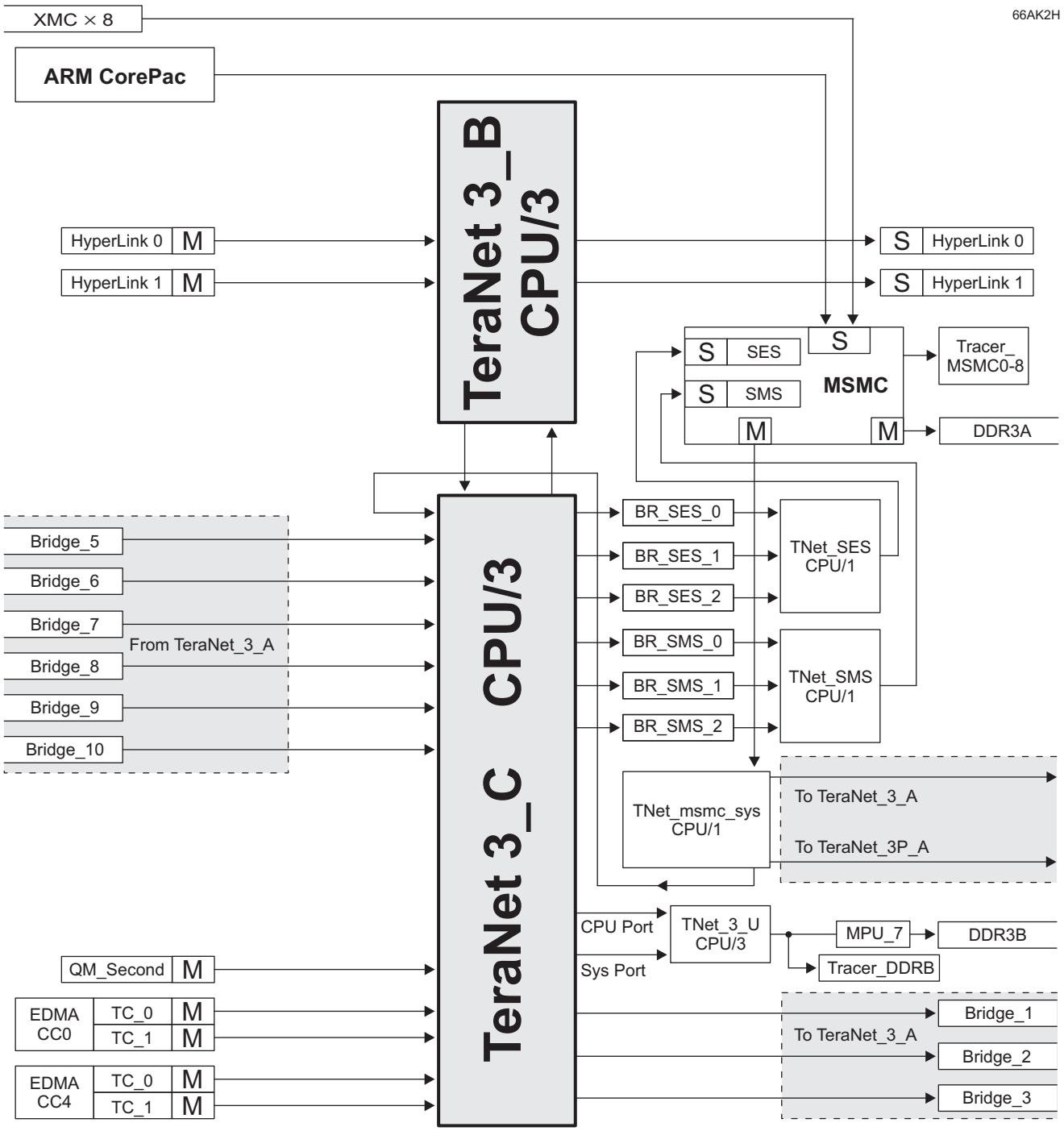

Figure 9-3. TeraNet 3_C

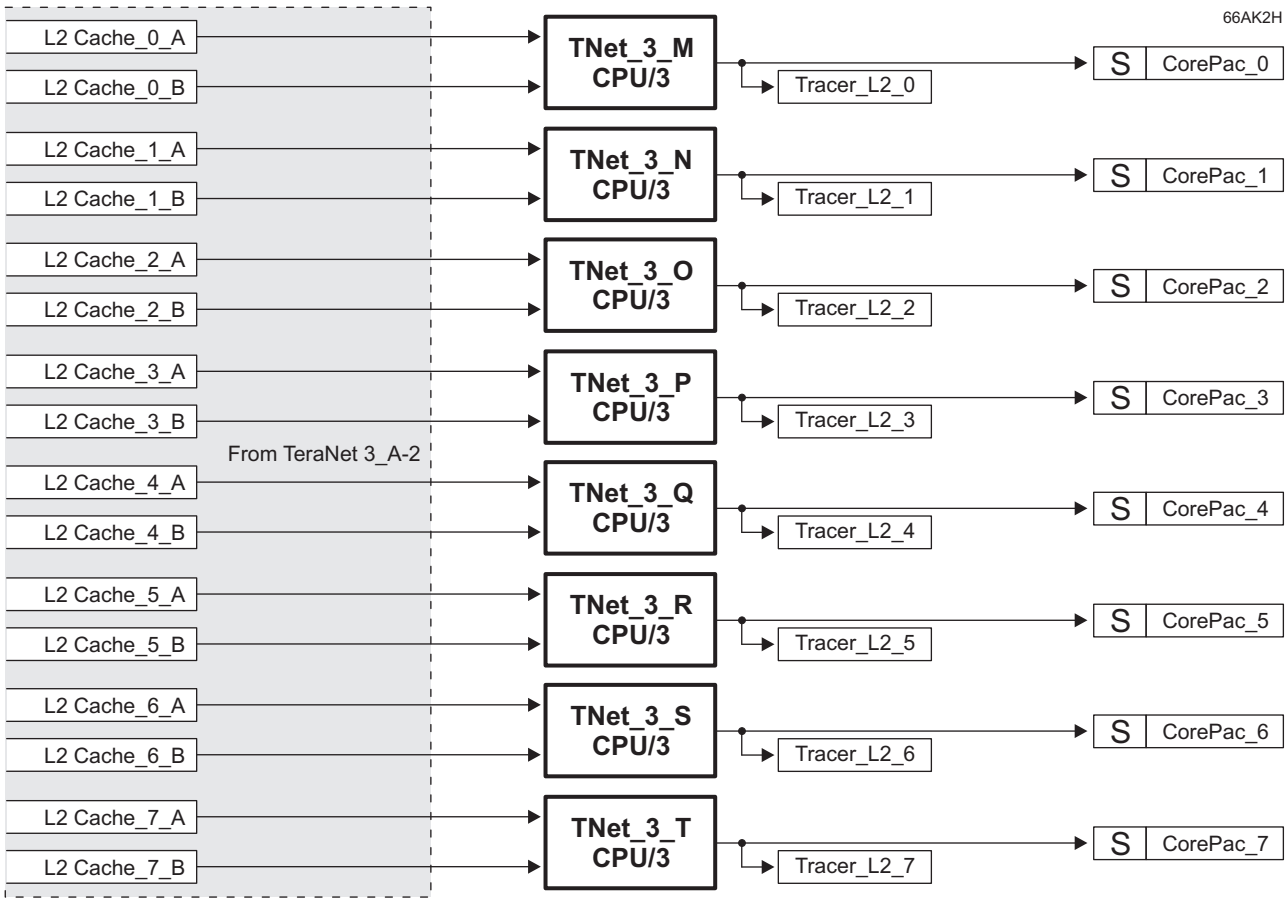

Figure 9-4. TeraNet C66x to SDMA

Copyright © 2012–2017, Texas Instruments Incorporated

Table 9-1 lists the master and slave end-point connections.

Intersecting cells may contain one of the following:

- **Y** — There is a connection between this master and that slave.
- **-** — There is no connection between this master and that slave.
- ***n*** — A numeric value indicates that the path between this master and that slave goes through bridge *n*.

Table 9-1. Data Space Interconnect

	SLAVES																			
MASTERS	**AEMIF16**	**BOOTROM_ARM**	**BOOTROM_C66X**	**COREPAC0_SDMA**	**COREPAC1_SDMA**	**COREPAC2_SDMA**	**COREPAC3_SDMA**	**COREPAC4_SDMA**	**COREPAC5_SDMA**	**COREPAC6_SDMA**	**COREPAC7_SDMA**	**DBG_STM**	**DDR3B**	**HYPERLINK0**	**HYPERLINK1**	**MSMC_SES**	**MSMC_SMS**	**PCIE**	**QM**	**SPI(0-2)**
10GbE[1]	-	-	-	Y	Y	Y	Y	Y	Y	Y	Y	-	10	-	-	ses_2	sms_2	Y	Y	-
CorePac0_CFG	-	-	-	-	-	-	-	-	-	-	-	-	-	-	-	-	-	-	-	-
CorePac1_CFG	-	-	-	-	-	-	-	-	-	-	-	-	-	-	-	-	-	-	-	-
CorePac2_CFG	-	-	-	-	-	-	-	-	-	-	-	-	-	-	-	-	-	-	-	-
CorePac3_CFG	-	-	-	-	-	-	-	-	-	-	-	-	-	-	-	-	-	-	-	-
CorePac4_CFG	-	-	-	-	-	-	-	-	-	-	-	-	-	-	-	-	-	-	-	-
CorePac5_CFG	-	-	-	-	-	-	-	-	-	-	-	-	-	-	-	-	-	-	-	-
CorePac6_CFG	-	-	-	-	-	-	-	-	-	-	-	-	-	-	-	-	-	-	-	-
CorePac7_CFG	-	-	-	-	-	-	-	-	-	-	-	-	-	-	-	-	-	-	-	-
CPT_CFG	-	-	-	-	-	-	-	-	-	-	-	Y	-	-	-	-	-	-	-	-
CPT_DDR3A	-	-	-	-	-	-	-	-	-	-	-	Y	-	-	-	-	-	-	-	-
CPT_DDR3B	-	-	-	-	-	-	-	-	-	-	-	Y	-	-	-	-	-	-	-	-
CPT_INTC	-	-	-	-	-	-	-	-	-	-	-	Y	-	-	-	-	-	-	-	-
CPT_L2_(0-7)	-	-	-	-	-	-	-	-	-	-	-	Y	-	-	-	-	-	-	-	-
CPT_MSMC(0-7)	-	-	-	-	-	-	-	-	-	-	-	Y	-	-	-	-	-	-	-	-
CPT_QM_CFG1	-	-	-	-	-	-	-	-	-	-	-	Y	-	-	-	-	-	-	-	-
CPT_QM_CFG2	-	-	-	-	-	-	-	-	-	-	-	Y	-	-	-	-	-	-	-	-
CPT_QM_M	-	-	-	-	-	-	-	-	-	-	-	Y	-	-	-	-	-	-	-	-
CPT_SPI_ROM_EMIF16	-	-	-	-	-	-	-	-	-	-	-	Y	-	-	-	-	-	-	-	-
CPT_TPCC(0_4)T	-	-	-	-	-	-	-	-	-	-	-	Y	-	-	-	-	-	-	-	-
CPT_TPCC(1_2_3)T	-	-	-	-	-	-	-	-	-	-	-	Y	-	-	-	-	-	-	-	-
DBG_DAP	Y	Y	Y	Y	Y	Y	Y	Y	Y	Y	Y	Y	Y	Y	Y	Y	Y	Y	Y	Y
EDMA0_CC_TR	-	-	-	-	-	-	-	-	-	-	-	-	-	-	-	-	-	-	-	-
EDMA0_TC0_RD	2,11	2,11	2,11	Y	Y	Y	Y	Y	Y	Y	Y	-	Y	Y	Y	SES_0	SMS_0	Y	Y	2,11
EDMA0_TC0_WR	2,11	-	-	Y	Y	Y	Y	Y	Y	Y	Y	-	Y	Y	Y	SES_0	SMS_0	Y	Y	2,11
EDMA0_TC1_RD	3,11	3,11	3,11	Y	Y	Y	Y	Y	Y	Y	Y	-	Y	Y	Y	SES_1	SMS_1	Y	-	3,11
EDMA0_TC1_WR	3,11	-	-	Y	Y	Y	Y	Y	Y	Y	Y	-	Y	Y	Y	SES_1	SMS_1	Y	-	3,11
EDMA1_CC_TR	-	-	-	-	-	-	-	-	-	-	-	-	-	-	-	-	-	-	-	-
EDMA1_TC0_RD	11	11	11	Y	Y	Y	Y	Y	Y	Y	Y	-	5	Y	Y	SES_0	SMS_0	Y	Y	11
EDMA1_TC0_WR	11	-	-	Y	Y	Y	Y	Y	Y	Y	Y	Y	5	Y	Y	SES_0	SMS_0	Y	Y	11
EDMA1_TC1_RD	11	Y	Y	Y	Y	Y	Y	Y	Y	Y	Y	-	6	Y	Y	SES_1	SMS_1	Y	Y	11
EDMA1_TC1_WR	11	-	-	Y	Y	Y	Y	Y	Y	Y	Y	-	6	Y	Y	SES_1	SMS_1	Y	Y	11
EDMA1_TC2_RD	11	Y	Y	Y	Y	Y	Y	Y	Y	Y	Y	-	7	Y	Y	SES_1	SMS_1	Y	-	11
EDMA1_TC2_WR	11	-	-	Y	Y	Y	Y	Y	Y	Y	Y	-	7	Y	Y	SES_1	SMS_1	Y	-	11
EDMA1_TC3_RD	11	Y	Y	Y	Y	Y	Y	Y	Y	Y	Y	-	8	Y	Y	SES_1	SMS_1	Y	-	11
EDMA1_TC3_WR	11	-	-	Y	Y	Y	Y	Y	Y	Y	Y	Y	8	Y	Y	SES_1	SMS_1	Y	-	11
EDMA2_CC_TR	-	-	-	-	-	-	-	-	-	-	-	-	-	-	-	-	-	-	-	-

(1) 66AK2H14 only.

Copyright © 2012–2017, Texas Instruments Incorporated

Table 9-1. Data Space Interconnect (continued)

MASTERS	SLAVES																		
	AEMIF16	BOOTROM_ARM	BOOTROM_C66X	COREPAC0_SDMA	COREPAC1_SDMA	COREPAC2_SDMA	COREPAC3_SDMA	COREPAC4_SDMA	COREPAC5_SDMA	COREPAC6_SDMA	COREPAC7_SDMA	DBG_STM	DDR3B	HYPERLINK0	HYPERLINK1	MSMC_SES	MSMC_SMS	PCIE	QM	SPI(0-2)
EDMA2_TC0_RD	11	Y	Y	Y	Y	Y	Y	Y	Y	Y	Y	-	9	Y	Y	SES_2	SMS_2	Y	Y	11
EDMA2_TC0_WR	11	-	-	Y	Y	Y	Y	Y	Y	Y	Y	Y	9	Y	Y	SES_2	SMS_2	Y	Y	11
EDMA2_TC1_RD	11	Y	Y	Y	Y	Y	Y	Y	Y	Y	Y	-	10	Y	Y	SES_2	SMS_2	Y	Y	11
EDMA2_TC1_WR	11	-	-	Y	Y	Y	Y	Y	Y	Y	Y	-	10	Y	Y	SES_2	SMS_2	Y	Y	11
EDMA2_TC2_RD	11	Y	Y	Y	Y	Y	Y	Y	Y	Y	Y	-	5	Y	Y	SES_0	SMS_0	Y	-	11
EDMA2_TC2_WR	11	-	-	Y	Y	Y	Y	Y	Y	Y	Y	Y	5	Y	Y	SES_0	SMS_0	Y	-	11
EDMA2_TC3_RD	11	Y	Y	Y	Y	Y	Y	Y	Y	Y	Y	-	6	Y	Y	SES_0	SMS_0	Y	-	11
EDMA2_TC3_WR	11	-	-	Y	Y	Y	Y	Y	Y	Y	Y	-	6	Y	Y	SES_0	SMS_0	Y	-	11
EDMA3_CC_TR	-	-	-	-	-	-	-	-	-	-	-	-	-	-	-	-	-	-	-	-
EDMA3_TC0_RD	11	Y	Y	Y	Y	Y	Y	Y	Y	Y	Y	-	7	Y	Y	SES_1	SMS_1	Y	Y	11
EDMA3_TC0_WR	11	-	-	Y	Y	Y	Y	Y	Y	Y	Y	Y	7	Y	Y	SES_1	SMS_1	Y	Y	11
EDMA3_TC1_RD	11	Y	Y	Y	Y	Y	Y	Y	Y	Y	Y	-	8	Y	Y	SES_1	SMS_1	Y	-	11
EDMA3_TC1_WR	11	-	-	Y	Y	Y	Y	Y	Y	Y	Y	-	8	Y	Y	SES_1	SMS_1	Y	-	11
EDMA4_CC_TR	-	-	-	-	-	-	-	-	-	-	-	-	-	-	-	-	-	-	-	-
EDMA4_TC0_RD	2,11	2,11	2,11	Y	Y	Y	Y	Y	Y	Y	Y	-	Y	Y	Y	SES_1	SMS_1	Y	Y	2,11
EDMA4_TC0_WR	2,11	-	-	Y	Y	Y	Y	Y	Y	Y	Y	-	Y	Y	Y	SES_1	SMS_1	Y	Y	2,11
EDMA4_TC1_RD	3,11	3,11	3,11	Y	Y	Y	Y	Y	Y	Y	Y	-	Y	Y	Y	SES_1	SMS_1	Y	-	3,11
EDMA4_TC1_WR	3,11	-	-	Y	Y	Y	Y	Y	Y	Y	Y	-	Y	Y	Y	SES_1	SMS_1	Y	-	3,11
HyperLink0_Master	11	1,11	1,11	Y	Y	Y	Y	Y	Y	Y	Y	-	Y	-	-	Y	Y	Y	Y	Y
HyperLink1_Master	11	1,11	1,11	Y	Y	Y	Y	Y	Y	Y	Y	-	Y	-	-	Y	Y	Y	Y	Y
MSMC_SYS	11	11	11	Y	Y	Y	Y	Y	Y	Y	Y	Y	Y	Y	Y	-	-	Y	Y	11
NETCP	-	-	-	Y	Y	Y	Y	Y	Y	Y	Y	-	7	-	-	SES_1	SMS_1	Y	Y	-
PCIE	11	-	-	Y	Y	Y	Y	Y	Y	Y	Y	Y	10	10	10	SES_2	SMS_2	-	Y	11
QM_Master1	-	-	-	Y	Y	Y	Y	Y	Y	Y	Y	-	5	Y	Y	SES_0	SMS_0	-	Y	-
QM_Master2	-	-	-	Y	Y	Y	Y	Y	Y	Y	Y	-	8	Y	Y	SES_1	SMS_1	-	Y	-
QM_SEC	-	-	-	Y	Y	Y	Y	Y	Y	Y	Y	Y	Y	Y	Y	SES_2	SMS_2	-	-	-
SRIO	11	-	-	Y	Y	Y	Y	Y	Y	Y	Y	Y	9	Y	Y	SES_2	SMS_2	-	Y	11
SRIO Packet DMA	11	-	-	Y	Y	Y	Y	Y	Y	Y	Y	-	9	-	-	SES_2	SMS_2	-	Y	-
USB	-	-	-	Y	Y	Y	Y	Y	Y	Y	Y	Y	5	Y	Y	SES_0	SMS_0	-	Y	-

Copyright © 2012–2017, Texas Instruments Incorporated

9.3 TeraNet Switch Fabric Connections Matrix - Configuration Space

Figure 9-5, Figure 9-6, Figure 9-7, and Figure 9-8 show the connections between masters and slaves through various sections of the TeraNet.

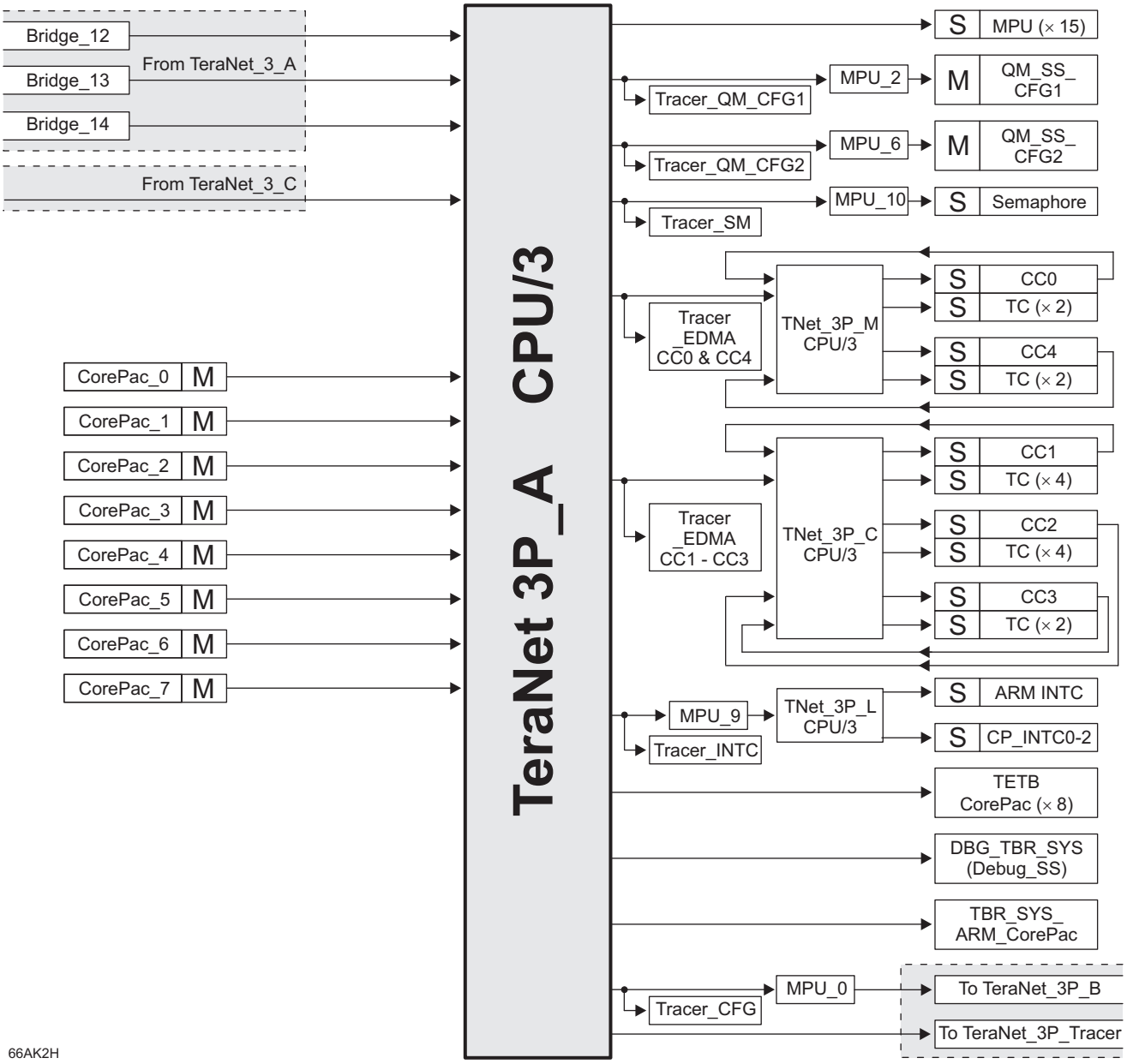

Figure 9-5. TeraNet 3P_A

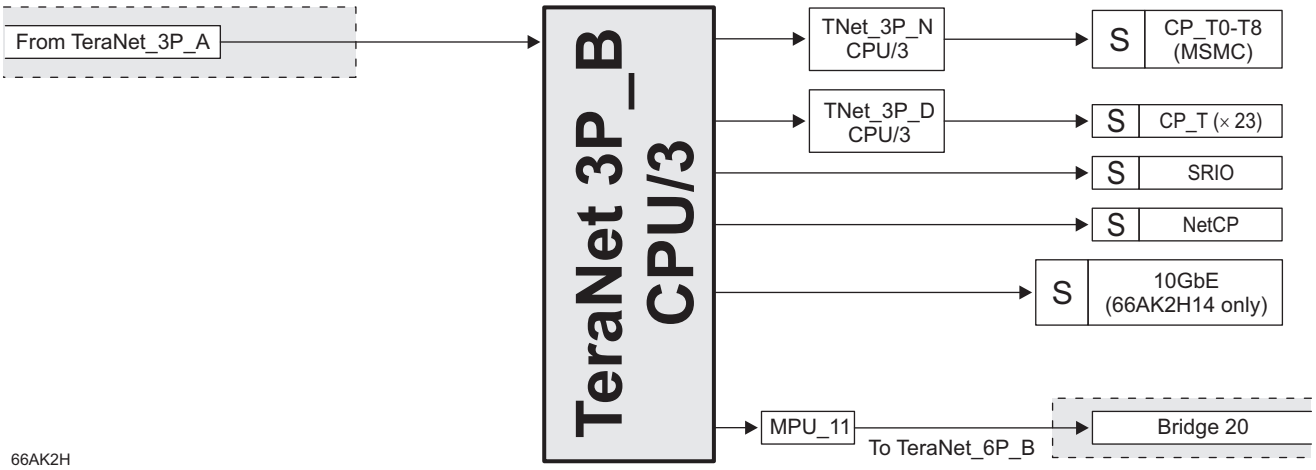

Figure 9-6. TeraNet 3P_B

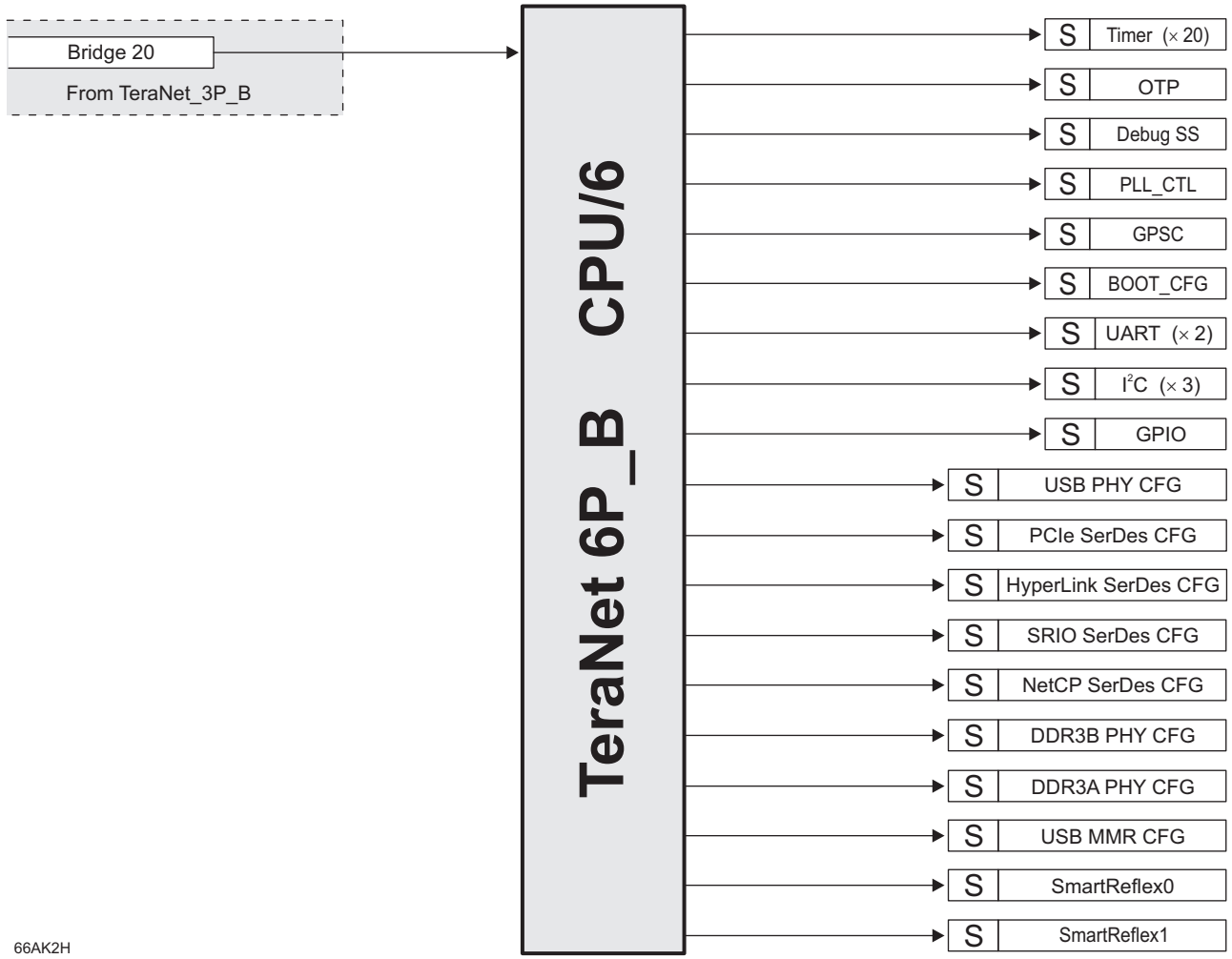

Figure 9-7. TeraNet 6P_B

Copyright © 2012–2017, Texas Instruments Incorporated

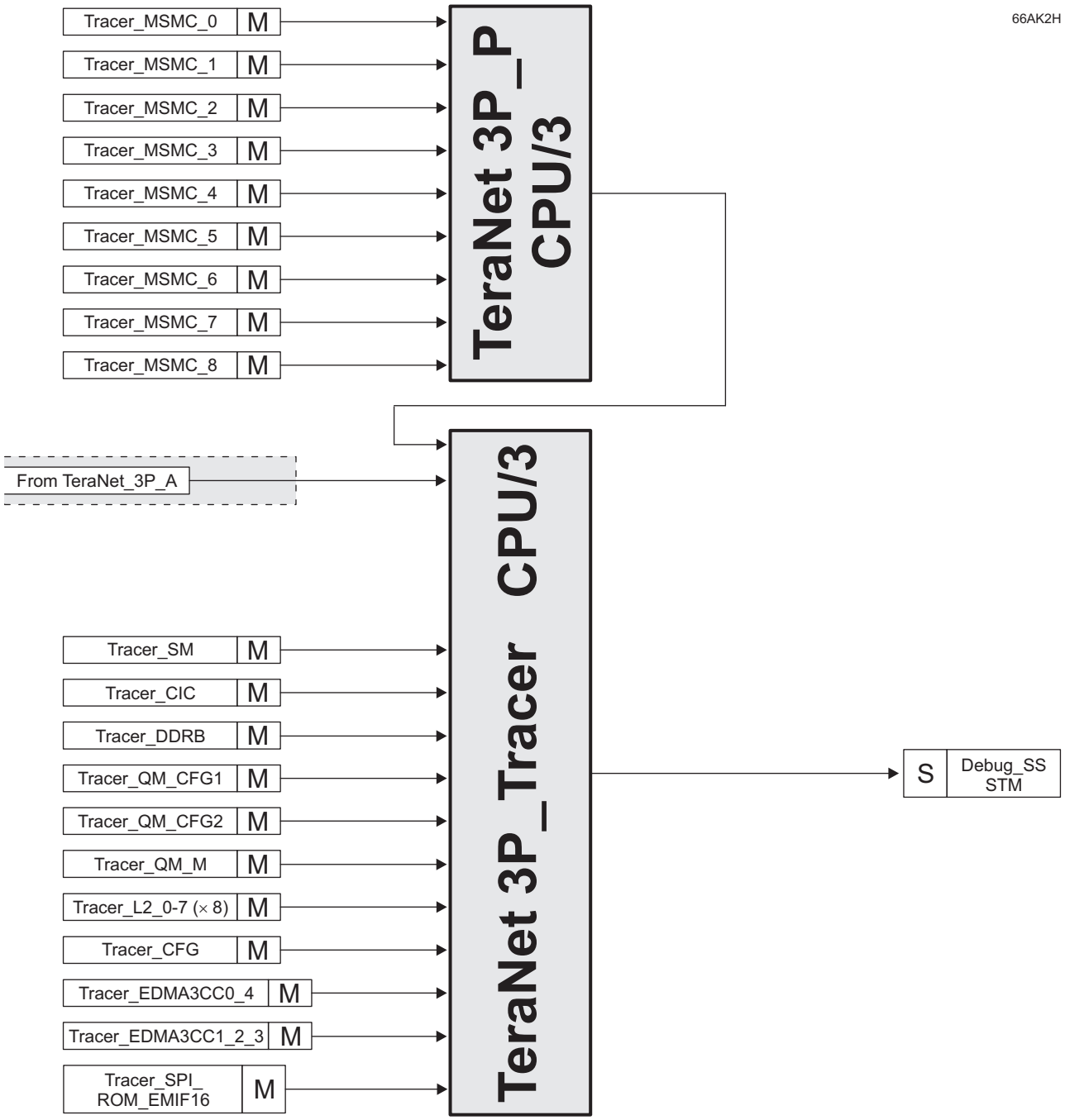

Figure 9-8. TeraNet 3P_Tracer

Table 9-2 and Table 9-3 list the master and slave end-point connections.

Intersecting cells may contain one of the following:

- **Y** — There is a connection between this master and that slave.
- **-** — There is no connection between this master and that slave.
- ***n*** — A numeric value indicates that the path between this master and that slave goes through bridge *n*.

Table 9-2. Configuration Space Interconnect - Section 1

	SLAVES																													
MASTERS	**10GBE_CFG**	**10GBE_SERDES_CFG**	**ADTF(0-7)_CFG**	**ARM_CFG**	**BOOTCFG_CFG**	**CP_INTC_CFG**	**CPT_CFG_CFG**	**CPT_DDR3A_CFG**	**CPT_DDR3B_CFG**	**CPT_INTC(0-2)_CFG**	**CPT_L2_(0-7)_CFG**	**CPT_MSMC(0-7)_CFG**	**CPT_QM_CFG1_CFG**	**CPT_QM_CFG2_CFG**	**CPT_QM_M_CFG**	**CPT_SPI_ROM_EMIF16_CFG**	**DBG_CFG**	**DBG_TBR_SYS**	**DDR3A_PHY_CFG**	**DDR3B_PHY_CFG**	**EDMA0_CC_CFG**	**EDMA0_TC(0-1)_CFG**	**EDMA1_CC_CFG**	**EDMA1_TC(0-3)_CFG**	**EDMA2_CC_CFG**	**EDMA2_TC(0-3)_CFG**	**EDMA3_CC_CFG**	**EDMA3_TC(0-1)_CFG**	**EDMA4_CC_CFG**
10GbE[1]	-	-	-	-	-	-	-	-	-	-	-	-	-	-	-	-	-	-	-	-	-	-	-	-	-	-	-	-	-	-
CorePac0_CFG	Y	Y	Y	Y	Y	Y	Y	Y	Y	Y	Y	Y	Y	Y	Y	Y	Y	Y	Y	Y	Y	Y	Y	Y	Y	Y	Y	Y	Y	Y
CorePac1_CFG	Y	Y	Y	Y	Y	Y	Y	Y	Y	Y	Y	Y	Y	Y	Y	Y	Y	Y	Y	Y	Y	Y	Y	Y	Y	Y	Y	Y	Y	Y
CorePac2_CFG	Y	Y	Y	Y	Y	Y	Y	Y	Y	Y	Y	Y	Y	Y	Y	Y	Y	Y	Y	Y	Y	Y	Y	Y	Y	Y	Y	Y	Y	Y
CorePac3_CFG	Y	Y	Y	Y	Y	Y	Y	Y	Y	Y	Y	Y	Y	Y	Y	Y	Y	Y	Y	Y	Y	Y	Y	Y	Y	Y	Y	Y	Y	Y
CorePac4_CFG	Y	Y	Y	Y	Y	Y	Y	Y	Y	Y	Y	Y	Y	Y	Y	Y	Y	Y	Y	Y	Y	Y	Y	Y	Y	Y	Y	Y	Y	Y
CorePac5_CFG	Y	Y	Y	Y	Y	Y	Y	Y	Y	Y	Y	Y	Y	Y	Y	Y	Y	Y	Y	Y	Y	Y	Y	Y	Y	Y	Y	Y	Y	Y
CorePac6_CFG	Y	Y	Y	Y	Y	Y	Y	Y	Y	Y	Y	Y	Y	Y	Y	Y	Y	Y	Y	Y	Y	Y	Y	Y	Y	Y	Y	Y	Y	Y
CorePac7_CFG	Y	Y	Y	Y	Y	Y	Y	Y	Y	Y	Y	Y	Y	Y	Y	Y	Y	Y	Y	Y	Y	Y	Y	Y	Y	Y	Y	Y	Y	Y
DBG_DAP	Y	Y	Y	Y	Y	Y	Y	Y	Y	Y	Y	Y	Y	Y	Y	Y	Y	Y	Y	Y	Y	Y	Y	Y	Y	Y	Y	Y	Y	Y
EDMA0_CC_TR	-	-	-	-	-	-	-	-	-	-	-	-	-	-	-	-	-	-	-	-	-	Y	-	-	-	-	-	-	-	-
EDMA0_TC0_RD	-	-	-	-	-	-	-	-	-	-	-	-	-	-	-	-	-	12	-	-	12	12	12	12	12	12	12	12	12	12
EDMA0_TC0_WR	-	-	-	-	-	-	-	-	-	-	-	-	-	-	-	-	-	-	-	-	12	12	12	12	12	12	12	12	12	12
EDMA0_TC1_RD	-	-	-	-	-	-	-	-	-	-	-	-	-	-	-	-	-	12	-	-	12	12	12	12	12	12	12	12	12	12
EDMA0_TC1_WR	-	-	-	-	-	-	-	-	-	-	-	-	-	-	-	-	-	-	-	-	12	12	12	12	12	12	12	12	12	12
EDMA1_CC_TR	-	-	-	-	-	-	-	-	-	-	-	-	-	-	-	-	-	-	-	-	-	-	-	Y	-	-	-	-	-	-
EDMA1_TC0_RD	12	12	12	12	12	12	12	12	12	12	12	12	12	12	12	12	12	12	12	12	12	12	12	12	12	12	12	12	12	12
EDMA1_TC0_WR	12	12	12	12	12	12	12	12	12	12	12	12	12	12	12	12	12	-	12	12	12	12	12	12	12	12	12	12	12	12
EDMA1_TC1_RD	-	-	-	-	-	-	-	-	-	-	-	-	-	-	-	-	-	-	-	-	13	13	13	13	13	13	13	13	13	13
EDMA1_TC1_WR	-	-	-	-	-	-	-	-	-	-	-	-	-	-	-	-	-	-	-	-	13	13	13	13	13	13	13	13	13	13
EDMA1_TC2_RD	-	-	-	-	-	-	-	-	-	-	-	-	-	-	-	-	-	-	-	-	14	14	14	14	14	14	14	14	14	14
EDMA1_TC2_WR	-	-	-	-	-	-	-	-	-	-	-	-	-	-	-	-	-	-	-	-	14	14	14	14	14	14	14	14	14	14
EDMA1_TC3_RD	12	12	12	12	12	12	12	12	12	12	12	12	12	12	12	12	12	12	12	12	12	12	12	12	12	12	12	12	12	12
EDMA1_TC3_WR	12	12	12	12	12	12	12	12	12	12	12	12	12	12	12	12	12	-	12	12	12	12	12	12	12	12	12	12	12	12
EDMA2_CC_TR	-	-	-	-	-	-	-	-	-	-	-	-	-	-	-	-	-	-	-	-	-	-	-	-	-	Y	-	-	-	-
EDMA2_TC0_RD	12	12	12	12	12	12	12	12	12	12	12	12	12	12	12	12	12	12	12	12	12	12	12	12	12	12	12	12	12	12
EDMA2_TC0_WR	12	12	12	12	12	12	12	12	12	12	12	12	12	12	12	12	12	-	12	12	12	12	12	12	12	12	12	12	12	12
EDMA2_TC1_RD	-	-	-	-	-	-	-	-	-	-	-	-	-	-	-	-	-	-	-	-	13	13	13	13	13	13	13	13	13	13
EDMA2_TC1_WR	-	-	-	-	-	-	-	-	-	-	-	-	-	-	-	-	-	-	-	-	13	13	13	13	13	13	13	13	13	13
EDMA2_TC2_RD	12	12	12	12	12	12	12	12	12	12	12	12	12	12	12	12	12	12	12	12	12	12	12	12	12	12	12	12	12	12
EDMA2_TC2_WR	12	12	12	12	12	12	12	12	12	12	12	12	12	12	12	12	12	-	12	12	12	12	12	12	12	12	12	12	12	12
EDMA2_TC3_RD	-	-	-	-	-	-	-	-	-	-	-	-	-	-	-	-	-	-	-	-	14	14	14	14	14	14	14	14	14	14
EDMA2_TC3_WR	-	-	-	-	-	-	-	-	-	-	-	-	-	-	-	-	-	-	-	-	14	14	14	14	14	14	14	14	14	14
EDMA3_CC_TR	-	-	-	-	-	-	-	-	-	-	-	-	-	-	-	-	-	-	-	-	-	-	-	-	-	-	-	-	-	-
EDMA3_TC0_RD	13	13	13	13	13	13	13	13	13	13	13	13	13	13	13	13	13	13	13	13	13	13	13	13	13	13	13	13	13	13
EDMA3_TC0_WR	13	13	13	13	13	13	13	13	13	13	13	13	13	13	13	13	13	13	13	13	13	13	13	13	13	13	13	13	13	13
EDMA3_TC1_RD	-	-	-	-	-	-	-	-	-	-	-	-	-	-	-	-	-	14	-	-	14	14	14	14	14	14	14	14	14	14
EDMA3_TC1_WR	-	-	-	-	-	-	-	-	-	-	-	-	-	-	-	-	-	-	-	-	14	14	14	14	14	14	14	14	14	14
EDMA4_CC_TR	-	-	-	-	-	-	-	-	-	-	-	-	-	-	-	-	-	-	-	-	-	-	-	-	-	-	-	-	-	-

(1) 66AK2H14 only.

Copyright © 2012–2017, Texas Instruments Incorporated

Table 9-2. Configuration Space Interconnect - Section 1 (continued)

	SLAVES																												
MASTERS	10GBE_CFG	10GBE_SERDES_CFG	ADTF(0-7)_CFG	ARM_CFG	BOOTCFG_CFG	CP_INTC_CFG	CPT_CFG_CFG	CPT_DDR3A_CFG	CPT_DDR3B_CFG	CPT_INTC(0-2)_CFG	CPT_L2_(0-7)_CFG	CPT_MSMC(0-7)_CFG	CPT_QM_CFG1_CFG	CPT_QM_CFG2_CFG	CPT_QM_M_CFG	CPT_SPI_ROM_EMIF16_CFG	DBG_CFG	DBG_TBR_SYS	DDR3A_PHY_CFG	DDR3B_PHY_CFG	EDMA0_CC_CFG	EDMA0_TC(0-1)_CFG	EDMA1_CC_CFG	EDMA1_TC(0-3)_CFG	EDMA2_CC_CFG	EDMA2_TC(0-3)_CFG	EDMA3_CC_CFG	EDMA3_TC(0-1)_CFG	EDMA4_CC_CFG
EDMA4_TC0_RD	-	-	-	-	-	-	-	-	-	-	-	-	-	-	-	-	-	12	-	-	12	12	12	12	12	12	12	12	12
EDMA4_TC0_WR	-	-	-	-	-	-	-	-	-	-	-	-	-	-	-	-	-	-	-	-	12	12	12	12	12	12	12	12	12
EDMA4_TC1_RD	-	-	-	-	-	-	-	-	-	-	-	-	-	-	-	-	-	12	-	-	12	12	12	12	12	12	12	12	12
EDMA4_TC1_WR	-	-	-	-	-	-	-	-	-	-	-	-	-	-	-	-	-	-	-	-	12	12	12	12	12	12	12	12	12
HyperLink0_Master	12	12	12	12	12	12	12	12	12	12	12	12	12	12	12	12	12	-	12	12	12	12	12	12	12	12	12	12	12
HyperLink1_Master	12	12	12	12	12	12	12	12	12	12	12	12	12	12	12	12	12	-	12	12	12	12	12	12	12	12	12	12	12
MSMC_SYS	Y	Y	Y	Y	Y	Y	Y	Y	Y	Y	Y	Y	Y	Y	Y	Y	Y	Y	Y	Y	Y	Y	Y	Y	Y	Y	Y	Y	Y
NETCP	-	-	-	-	-	-	-	-	-	-	-	-	-	-	-	-	-	-	-	-	-	-	-	-	-	-	-	-	-
PCIE	12	12	12	12	12	12	12	12	12	12	12	12	12	12	12	12	12	12	12	12	12	12	12	12	12	12	12	12	12
QM_Master1	-	-	-	-	-	-	-	-	-	-	-	-	-	-	-	-	-	-	-	-	12	-	12	-	12	-	12	-	12
QM_Master2	-	-	-	-	-	-	-	-	-	-	-	-	-	-	-	-	-	-	-	-	12	-	12	-	12	-	12	-	12
QM_SEC	12	-	-	12	-	-	-	-	-	-	-	-	-	-	-	-	-	-	-	-	-	-	-	-	-	-	-	-	-
SRIO	14	14	14	14	14	14	14	14	14	14	14	14	14	14	14	14	14	14	14	14	14	14	14	14	14	14	14	14	14
SRIO Packet DMA	-	-	-	-	-	-	-	-	-	-	-	-	-	-	-	-	-	-	-	-	-	-	-	-	-	-	-	-	-
USB	-	-	-	-	-	-	-	-	-	-	-	-	-	-	-	-	-	12	-	-	-	-	-	-	-	-	-	-	-

Table 9-3. Configuration Space Interconnect - Section 2

	SLAVES																												
MASTERS	EDMA4_TC(0-1)_CFG	GIC_CFG	GPIO_CFG	HYPERLINK0_SERDES_CFG	HYPERLINK1_SERDES_CFG	I2C(0-2)_CFG	MPU(0-14)_CFG	NETCP_CFG	NETCP_SERDES_CFG	PCIE_SERDES_CFG	PLL_CTL_CFG	PSC_CFG	QM_CFG1	QM_CFG2	SRIO_CFG	SRIO_SERDES_CFG	TBR_SYS_ARM	TETB0_CFG	TETB1_CFG	TETB2_CFG	TETB3_CFG	TETB4_CFG	TETB5_CFG	TETB6_CFG	TETB7_CFG	TIMER(0-19)_CFG	UART(0-1)_CFG	USB_MMR_CFG	USB_PHY_CFG
10GbE	-	-	-	-	-	-	-	-	-	-	-	-	-	-	-	-	-	-	-	-	-	-	-	-	-	-	-	-	-
CorePac0_CFG	Y	-	Y	Y	Y	Y	Y	Y	Y	Y	Y	Y	Y	Y	Y	Y	Y	Y	Y	Y	Y	Y	Y	Y	Y	Y	Y	Y	Y
CorePac1_CFG	Y	-	Y	Y	Y	Y	Y	Y	Y	Y	Y	Y	Y	Y	Y	Y	Y	Y	Y	Y	Y	Y	Y	Y	Y	Y	Y	Y	Y
CorePac2_CFG	Y	-	Y	Y	Y	Y	Y	Y	Y	Y	Y	Y	Y	Y	Y	Y	Y	Y	Y	Y	Y	Y	Y	Y	Y	Y	Y	Y	Y
CorePac3_CFG	Y	-	Y	Y	Y	Y	Y	Y	Y	Y	Y	Y	Y	Y	Y	Y	Y	Y	Y	Y	Y	Y	Y	Y	Y	Y	Y	Y	Y
CorePac4_CFG	Y	-	Y	Y	Y	Y	Y	Y	Y	Y	Y	Y	Y	Y	Y	Y	Y	Y	Y	Y	Y	Y	Y	Y	Y	Y	Y	Y	Y
CorePac5_CFG	Y	-	Y	Y	Y	Y	Y	Y	Y	Y	Y	Y	Y	Y	Y	Y	Y	Y	Y	Y	Y	Y	Y	Y	Y	Y	Y	Y	Y
CorePac6_CFG	Y	-	Y	Y	Y	Y	Y	Y	Y	Y	Y	Y	Y	Y	Y	Y	Y	Y	Y	Y	Y	Y	Y	Y	Y	Y	Y	Y	Y
CorePac7_CFG	Y	-	Y	Y	Y	Y	Y	Y	Y	Y	Y	Y	Y	Y	Y	Y	Y	Y	Y	Y	Y	Y	Y	Y	Y	Y	Y	Y	Y
DBG_DAP	Y	Y	Y	Y	Y	Y	Y	Y	Y	Y	Y	Y	Y	Y	Y	Y	Y	Y	Y	Y	Y	Y	Y	Y	Y	Y	Y	Y	Y
EDMA0_CC_TR	-	-	-	-	-	-	-	-	-	-	-	-	-	-	-	-	-	-	-	-	-	-	-	-	-	-	-	-	-
EDMA0_TC0_RD	12	-	-	-	-	-	-	-	-	-	-	-	-	-	-	-	-	-	-	-	-	12	12	-	-	-	-	-	-
EDMA0_TC0_WR	12	-	-	-	-	-	-	-	-	-	-	-	-	-	-	-	-	-	-	-	-	-	-	-	-	-	-	-	-
EDMA0_TC1_RD	12	-	-	-	-	-	-	-	-	-	-	-	-	-	-	-	-	-	-	-	-	12	12	-	-	-	-	-	-
EDMA0_TC1_WR	12	-	-	-	-	-	-	-	-	-	-	-	-	-	-	-	-	-	-	-	-	-	-	-	-	-	-	-	-
EDMA1_CC_TR	-	-	-	-	-	-	-	-	-	-	-	-	-	-	-	-	-	-	-	-	-	-	-	-	-	-	-	-	-
EDMA1_TC0_RD	12	12	12	12	12	12	12	12	12	12	12	12	12	12	12	12	12	-	-	-	-	12	12	-	-	12	12	12	12
EDMA1_TC0_WR	12	12	12	12	12	12	12	12	12	12	12	12	12	12	12	12	12	-	-	-	-	-	-	-	-	12	12	12	12
EDMA1_TC1_RD	13	-	-	-	-	-	-	-	-	-	-	-	-	-	-	-	-	13	13	-	-	-	-	13	-	-	-	-	-
EDMA1_TC1_WR	13	-	-	-	-	-	-	-	-	-	-	-	-	-	-	-	-	-	-	-	-	-	-	-	-	-	-	-	-
EDMA1_TC2_RD	14	-	-	-	-	-	-	-	-	-	-	-	-	-	-	-	-	-	-	14	14	-	-	-	14	-	-	-	-

Table 9-3. Configuration Space Interconnect - Section 2 (continued)

MASTERS	SLAVES																													
	EDMA4_TC(0-1)_CFG	GIC_CFG	GPIO_CFG	HYPERLINK0_SERDES_CFG	HYPERLINK1_SERDES_CFG	I2C(0-2)_CFG	MPU(0-14)_CFG	NETCP_CFG	NETCP_SERDES_CFG	PCIE_SERDES_CFG	PLL_CTL_CFG	PSC_CFG	QM_CFG1	QM_CFG2	SRIO_CFG	SRIO_SERDES_CFG	TBR_SYS_ARM	TETB0_CFG	TETB1_CFG	TETB2_CFG	TETB3_CFG	TETB4_CFG	TETB5_CFG	TETB6_CFG	TETB7_CFG	TIMER(0-19)_CFG	UART(0-1)_CFG	USB_MMR_CFG	USB_PHY_CFG
EDMA1_TC2_WR	14	-	-	-	-	-	-	-	-	-	-	-	-	-	-	-	-	-	-	-	-	-	-	-	-	-	-	-	-	-
EDMA1_TC3_RD	12	12	12	12	12	12	12	12	12	12	12	12	12	12	12	12	12	-	-	-	-	12	12	-	-	12	12	12	12
EDMA1_TC3_WR	12	12	12	12	12	12	12	12	12	12	12	12	12	12	12	12	12	-	-	-	-	-	-	-	-	12	12	12	12
EDMA2_CC_TR	-	-	-	-	-	-	-	-	-	-	-	-	-	-	-	-	-	-	-	-	-	-	-	-	-	-	-	-	-	-
EDMA2_TC0_RD	12	12	12	12	12	12	12	12	12	12	12	12	12	12	12	12	12	-	-	-	-	Y	Y	-	-	12	12	12	12
EDMA2_TC0_WR	12	12	12	12	12	12	12	12	12	12	12	12	12	12	12	12	12	-	-	-	-	-	-	-	-	12	12	12	12
EDMA2_TC1_RD	13	-	-	-	-	-	-	-	-	-	-	-	-	-	-	-	-	13	13	-	-	-	-	13	-	-	-	-	-
EDMA2_TC1_WR	13	-	-	-	-	-	-	-	-	-	-	-	-	-	-	-	-	-	-	-	-	-	-	-	-	-	-	-	-
EDMA2_TC2_RD	12	12	12	12	12	12	12	12	12	12	12	12	12	12	12	12	12	-	-	-	-	12	12	-	-	12	12	12	12
EDMA2_TC2_WR	12	12	12	12	12	12	12	12	12	12	12	12	12	12	12	12	12	-	-	-	-	-	-	-	-	12	12	12	12
EDMA2_TC3_RD	14	-	-	-	-	-	-	-	-	-	-	-	-	-	-	-	-	-	-	14	14	-	-	-	14	-	-	-	-
EDMA2_TC3_WR	14	-	-	-	-	-	-	-	-	-	-	-	-	-	-	-	-	-	-	-	-	-	-	-	-	-	-	-	-
EDMA3_CC_TR	-	-	-	-	-	-	-	-	-	-	-	-	-	-	-	-	-	-	-	-	-	-	-	-	-	-	-	-	-
EDMA3_TC0_RD	13	13	13	13	13	13	13	13	13	13	13	13	13	13	13	13	13	13	13	13	13	13	13	13	13	13	13	13	13
EDMA3_TC0_WR	13	13	13	13	13	13	13	13	13	13	13	13	13	13	13	13	13	-	-	-	-	-	-	-	-	13	13	13	13
EDMA3_TC1_RD	14	-	-	-	-	-	-	-	-	-	-	-	-	-	-	-	-	14	14	14	14	14	14	14	14	-	-	-	-
EDMA3_TC1_WR	14	-	-	-	-	-	-	-	-	-	-	-	-	-	-	-	-	-	-	-	-	-	-	-	-	-	-	-	-
EDMA4_CC_TR	-	-	-	-	-	-	-	-	-	-	-	-	-	-	-	-	-	-	-	-	-	-	-	-	-	-	-	-	-
EDMA4_TC0_RD	12	-	-	-	-	-	-	-	-	-	-	-	-	-	-	-	12	-	-	-	-	12	12	-	-	-	-	-	-
EDMA4_TC0_WR	12	-	-	-	-	-	-	-	-	-	-	-	-	-	-	-	12	-	-	-	-	-	-	-	-	-	-	-	-
EDMA4_TC1_RD	12	-	-	-	-	-	-	-	-	-	-	-	-	-	-	-	12	-	-	-	-	12	12	-	-	-	-	-	-
EDMA4_TC1_WR	12	-	-	-	-	-	-	-	-	-	-	-	-	-	-	-	12	-	-	-	-	-	-	-	-	-	-	-	-
HyperLink0_Master	12	-	12	12	12	12	12	12	12	12	12	12	12	12	12	12	12	-	-	-	-	-	-	-	-	12	12	12	12
HyperLink1_Master	12	-	12	12	12	12	12	12	12	12	12	12	12	12	12	12	12	-	-	-	-	-	-	-	-	12	12	12	12
MSMC_SYS	Y	Y	Y	Y	Y	Y	Y	Y	Y	Y	Y	Y	Y	Y	Y	Y	Y	Y	Y	Y	Y	Y	Y	Y	Y	Y	Y	Y	Y
NETCP	-	-	-	-	-	-	-	-	-	-	-	-	-	-	-	-	-	-	-	-	-	-	-	-	-	-	-	-	-
PCIE	12	-	12	12	12	12	12	12	12	12	12	12	12	12	12	12	12	12	12	12	12	12	12	12	12	12	12	12	12
QM_Master1	-	-	-	-	-	-	-	-	-	-	-	-	-	-	-	-	-	-	-	-	-	-	-	-	-	-	-	-	-
QM_Master2	-	-	-	-	-	-	-	-	-	-	-	-	-	-	-	-	-	-	-	-	-	-	-	-	-	-	-	-	-
QM_SEC	-	-	-	-	-	-	-	12	-	-	-	-	-	-	-	-	12	-	-	-	-	-	-	-	-	-	-	12	-
SRIO	14	-	14	14	14	14	14	14	14	14	14	14	14	14	14	14	14	14	14	14	14	14	14	14	14	14	14	14	14
SRIO Packet DMA	-	-	-	-	-	-	-	-	-	-	-	-	-	-	-	-	-	-	-	-	-	-	-	-	-	-	-	-	-
USB	-	-	-	-	-	-	-	-	-	-	-	-	-	-	-	-	12	12	12	12	12	12	12	12	12	-	-	-	-

Copyright © 2012–2017, Texas Instruments Incorporated

9.4 Bus Priorities

The priority level of all master peripheral traffic is defined at the TeraNet boundary. User-programmable priority registers allow software configuration of the data traffic through the TeraNet. Note that a lower number means higher priority — PRI = 000b = urgent, PRI = 111b = low.

All other masters provide their priority directly and do not need a default priority setting. Examples include the C66x CorePacs, whose priorities are set through software in the UMC control registers. All the Packet DMA-based peripherals also have internal registers to define the priority level of their initiated transactions.

The Packet DMA secondary port is one master port that does not have priority allocation register inside the Multicore Navigator. The priority level for transaction from this master port is described by the QM_PRIORITY bit field in the CHIP_MISC_CTL0 register shown in Section 10.2.3.24.

For all other modules, see the respective User's Guides listed in Section 12.3 for programmable priority registers.

Copyright © 2012–2017, Texas Instruments Incorporated

10 Device Boot and Configuration

10.1 Device Boot

10.1.1 Boot Sequence

The boot sequence is a process by which the internal memory is loaded with program and data sections. The boot sequence is started automatically after each power-on reset or warm reset.

The 66AK2Hxx supports several boot processes that begin execution at the ROM base address, which contains the bootloader code necessary to support various device boot modes. The boot processes are software-driven and use the BOOTMODE[15:0] device configuration inputs to determine the software configuration that must be completed. For more details on boot sequence, see the *KeyStone II Architecture ARM Bootloader User's Guide*.

For 66AK2Hxx nonsecure devices, there are two types of booting: the C66x CorePac as the boot master and the ARM CorePac as the boot master. For secure devices, the C66x CorePac is always the secure master and the C66x CorePac0 or ARM CorePac Core0 can be the boot master. The ARM CorePac does not support no-boot mode. Both the C66x CorePacs and the ARM CorePac need to read the BOOTMODE register to determine how to proceed with the boot.

Table 10-1 shows memory space reserved for boot by the C66x CorePac.

Table 10-1. C66x DSP Boot RAM Memory Map

START ADDRESS	SIZE	DESCRIPTION
0x80_0000	0x1_0000	Reserved
0x8e_7f80	0x80	C66x CorePac ROM version string
0x8e_8000	0x7f00	Boot Master Table overlayed with scratch
0x8e_767c	4	Boot Master Table Valid Length Field
0x8e_fff0	4	Host Data Address (boot magic address for secure boot through master peripherals)
0x8f_7800	0x410	Secure host Data structure
0x8f_a290	0x4000	Boot Stack
0x8f_e290	0x90	Boot Log Data
0x8f_e320	0x20	Boot Status Stack
0x8f_e410	0xf0	Boot Stats
0x8f_e520	0x13fc	Boot Data
0x8f_f91c	0x404	Boot Trace Info
0x8f_fd20	0x180	DDR Config
0x8f_fea0	0x60	Boot RAM call table
0x8f_ff00	0x80	Boot Parameter table
0x8f_fff8	0x4	Secure Signal Magic address
0x8f_fffc	0x4	Boot Magic address

Table 10-2 shows addresses reserved for boot by the ARM CorePac.

Table 10-2. ARM Boot RAM Memory Map

START ADDRESS	SIZE	DESCRIPTION
0xc57_e000	0xc00	Context RAM not scrubbed on secure boot
0xc58_6f80	0x80	Global level 0 nonsecure translation table
0xc58_7000	0x5000	Global nonsecure page table for memory covering ROM
0xc58_c000	0x1000	Core 0 nonsecure level 1 translation table
0xc58_d000	0x1000	Core 1 nonsecure level 1 translation table
0xc58_e000	0x1000	Core 2 nonsecure level 1 translation table

Copyright © 2012–2017, Texas Instruments Incorporated

Table 10-2. ARM Boot RAM Memory Map (continued)

START ADDRESS	SIZE	DESCRIPTION
0xc58_f000	0x1000	Core 3 nonsecure level 1 translation table
0xc59_0000	0x7f00	Packet memory buffer
0xc59_7f00	4	Host Data Address (boot magic address for secure boot through master peripherals)
0xc5a_6e00	0x200	DDR3a configuration structure
0xc5a_7000	0x3000	Boot Data
0xc5a_a000	0x3000	Supervisor stack, each core gets 0xc00 bytes
0xc5a_d000	4	Arm boot magic address, core 0
0xc5a_d004	4	Arm boot magic address, core 1
0xc5a_d008	4	Arm boot magic address, core 2
0xc5a_d00c	4	Arm boot magic address, core 3
0xc5a_e000	0x400	Abort stack, core 0
0xc5a_e400	0x400	Abort stack, core 1
0xc5a_e800	0x400	Abort stack, core 2
0xc5a_ec00	0x400	Abort stack, core 3
0xc5a_f000	0x400	Unknown mode stack, core 0
0xc5a_f400	0x400	Unknown mode stack, core 1
0xc5a_f800	0x400	Unknown mode stack, core 2
0xc5a_fc00	0x400	Unknown mode stack, core 3
0xc5b_0000	0x180	Boot Version string, core 0
0xc5b_0180	0x80	Boot status stack, core 0
0xc5b_0200	0x100	Boot stats, core 0
0xc5b_0300	0x100	Boot log, core 0
0x5b_0400	0x100	Boot RAM call table, core 0
0xc5b_0500	0x100	Boot parameter tables, core 0
0xc5b_0600	0x19e0	Boot Data, core 0
0xc5b_1fe0	0x1010	Boot Trace, core 0
0xc5b_4000	0x180	Boot Version string, core 1
0xc5b_4180	0x80	Boot status stack, core 1
0xc5b_4200	0x100	Boot stats, core 1
0xc5b_4300	0x100	Boot log, core 1
0x5b_4400	0x100	Boot RAM call table, core 1
0xc5b_4500	0x100	Boot parameter tables, core 1
0xc5b_4600	0x19e0	Boot Data, core 1
0xc5b_5fe0	0x1010	Boot Trace, core 1
0xc5b_8000	0x180	Boot Version string, core 2
0xc5b_8180	0x80	Boot status stack, core 2
0xc5b_8200	0x100	Boot stats, core 2
0xc5b_8300	0x100	Boot log, core 2
0x5b_8400	0x100	Boot RAM call table, core 2
0xc5b_8500	0x100	Boot parameter tables, core 2
0xc5b_8600	0x19e0	Boot Data, core 2
0xc5b_9fe0	0x1010	Boot Trace, core 2
0xc5b_c000	0x180	Boot Version string, core 3
0xc5b_c180	0x80	Boot status stack, core 3
0xc5b_c200	0x100	Boot stats, core 3
0xc5b_c300	0x100	Boot log, core 3
0x5b_c400	0x100	Boot RAM call table, core 3

Copyright © 2012–2017, Texas Instruments Incorporated

Table 10-2. ARM Boot RAM Memory Map (continued)

START ADDRESS	SIZE	DESCRIPTION
0xc5b_c500	0x100	Boot parameter tables, core 3
0xc5b_c600	0x19e0	Boot Data, core 3
0xc5b_dfe0	0x1010	Boot Trace, core 3
0xc5c_0000	0x4_0000	Secure MSMC

10.1.2 Boot Modes Supported

The device supports several boot processes, which leverage the internal boot ROM. Most boot processes are software-driven, using the BOOTMODE[15:0] device configuration inputs to determine the software configuration that must be completed. From a hardware perspective, there are four possible boot modes:

- **Public ROM Boot when the C66x CorePac0 is the boot master** — The C66x CorePac is released from reset and begins executing from the L3 ROM base address. The ARM CorePac is also released from reset at the same time as the C66xCorePac. Both the C66x CorePac and the ARM CorePac read the BOOTMODE register inside the bootCFG module to determine which is the boot master.

  After the Boot ROM for the Cortex-A15 processor reads the BOOTMODE to determine that the C66x CorePac is the boot master, all Cortex-A15 processors stay idle by executing WFI instruction and waiting for the C66x CorePac's interrupt. The chip Boot ROM reads the BOOTMODE register to determine that the C66x CorePac0 is the boot master, then the C66x CorePac0 performs the boot process and the other C66x CorePacs execute an IDLE instruction. After the boot process is completed, the C66x CorePac0 begins to execute the code downloaded during the boot process. If the downloaded code included code for the other C66x cores and/or the Cortex-A15 processor cores, the downloaded code may contain logic to write the code execution addresses to the boot address register for the core that is to execute it. The C66x CorePac0 can then generate an interrupt to the core causing it to execute the code. When they receive the IPC interrupt, the rest of the C66x CorePacs and the ARM CorePac complete boot management operations and begin executing from the predefined location in memory.
- **Public ROM Boot when the ARM CorePac Core0 is the boot master** — The only difference between this boot mode and when the C66x CorePac is the boot master, is that the ARM CorePac performs the boot process while the C66x CorePacs execute idle instructions. When the ARM CorePac Core0 finishes the boot process, it may send interrupts to the C66x CorePacs and Cortex-A15 processor cores through IPC registers. The C66x CorePacs complete the boot management operations and begin executing from the predefined locations.
- **Secure ROM Boot when the C66x CorePac0 is the boot master** —The C66x CorePac0 and the ARM CorePac Core0 are released from reset simultaneously and the C66x CorePac0 begins executing from secure ROM. The C66x CorePac0 performs the boot process including any authentication and decryption required on the bootloaded image for the C66x CorePacs and for the ARM CorePac prior to beginning execution.
- **Secure ROM Boot when the ARM CorePac0 is the boot master** — The C66x CorePac0 and the ARM CorePac Core0 are released from reset simultaneously and begin executing from secure ROM. The ARM CorePac Core0 initiates the boot process. The C66x CorePac0 performs any authentication and decryption required on the bootloaded image for the C66x CorePacs and ARM CorePac prior to beginning execution.

The boot process performed by the C66x CorePac0 and the ARM CorePac Core0 in public ROM boot and secure ROM boot are determined by the BOOTMODE[15:0] value in the DEVSTAT register. The C66x CorePac0 and the ARM CorePac Core0 read this value, and then execute the associated boot process in software. Bit 8 determines whether the boot is C66x CorePac boot or ARM CorePac boot. The figure below shows the bits associated with BOOTMODE[15:0] (DEVSTAT[16:1]) when the C66x CorePac or ARM CorePac is the boot master. Figure 10-1 does not include bit 0 of the DEVSTAT contents. Bit 0 is used to select overall system endianess that is independent of the boot mode.

Copyright © 2012–2017, Texas Instruments Incorporated

The boot ROM will continue attempting to boot in this mode until successful or an unrecoverable error occurs.

The PLL settings are shown at the end of this section, and the PLL set-up details can be found in Section 11.5.

NOTE

It is important to remember that the BOOTMODE[15:0] **pins** map to the DEVSTAT[16:1] **bits** of the DEVSTAT register.

Figure 10-1. DEVSTAT Boot Mode Pins ROM Mapping

<table>
<tr><th colspan="20">DEVSTAT Boot Mode Pins ROM Mapping</th></tr>
<tr><th>16</th><th>15</th><th>14</th><th>13</th><th>12</th><th>11</th><th>10</th><th>9</th><th>8</th><th>7</th><th>6</th><th>5</th><th>4</th><th>3</th><th>2</th><th>1</th><th>Mode</th></tr>
<tr><td>X</td><td>X</td><td>0</td><td>ARMEN</td><td>SYSEN</td><td colspan="3" rowspan="2">ARM PLL CONFIG</td><td rowspan="20">Boot Master</td><td colspan="3" rowspan="2">SYS PLL CONFIG</td><td rowspan="4">Min</td><td>0</td><td>0</td><td>0</td><td>SLEEP</td></tr>
<tr><td colspan="3">SlaveAddr</td><td>1</td><td colspan="2">Port</td><td>0</td><td>0</td><td>0</td><td>I2C SLAVE</td></tr>
<tr><td>X</td><td>X</td><td>X</td><td colspan="2">Bus Addr</td><td colspan="3" rowspan="2">Param Idx</td><td>X</td><td colspan="2" rowspan="2">Port</td><td>0</td><td>0</td><td>1</td><td>I2C MASTER</td></tr>
<tr><td>Width</td><td colspan="2">Csel</td><td colspan="2">Mode</td><td>Npin</td><td>0</td><td>1</td><td>0</td><td>SPI</td></tr>
<tr><td rowspan="2">0</td><td colspan="2" rowspan="2">Base Addr</td><td rowspan="2">Wait</td><td rowspan="2">Width</td><td colspan="3">ARM PLL CONFIG</td><td colspan="4" rowspan="10">SYS PLL CONFIG</td><td rowspan="2">0</td><td rowspan="4">0</td><td rowspan="4">1</td><td rowspan="4">1</td><td>EMIF (ARM Master)</td></tr>
<tr><td>X</td><td colspan="2">Chip Sel</td><td>EMIF (DSP Master)</td></tr>
<tr><td rowspan="2">1</td><td colspan="3" rowspan="2">First Block</td><td rowspan="2">Clear</td><td colspan="3">ARM PLL CONFIG</td><td rowspan="6">Min</td><td>NAND (ARM Master)</td></tr>
<tr><td>X</td><td colspan="2">Chip Sel</td><td>NAND (DSP Master)</td></tr>
<tr><td>Lane</td><td colspan="2" rowspan="2">Ref Clock</td><td colspan="2" rowspan="2">Data Rate</td><td colspan="3">ARM PLL CONFIG</td><td>1</td><td>0</td><td>0</td><td>SRIO (ARM Master)</td></tr>
<tr><td>X</td><td colspan="3">Lane Setup</td><td>SRIO (DSP Master)</td></tr>
<tr><td rowspan="2">PA clk</td><td colspan="2" rowspan="2">Ref clk</td><td colspan="2" rowspan="2">Ext Con</td><td colspan="3">ARM PLL CONFIG</td><td rowspan="2">1</td><td rowspan="2">0</td><td rowspan="2">1</td><td>Ethernet (ARM Master)</td></tr>
<tr><td>Rsvd</td><td colspan="2">Lane Setup</td><td>Ethernet (DSP Master)</td></tr>
<tr><td>Ref clk</td><td colspan="4">Bar Config</td><td colspan="3">ARM PLL CONFIG</td><td rowspan="2">0</td><td rowspan="2">1</td><td rowspan="2">1</td><td rowspan="2">0</td><td>PCIe (ARM Master)</td></tr>
<tr><td colspan="4">SerDes Cfg</td><td>PCIe (DSP Master)</td></tr>
<tr><td rowspan="2">Port</td><td colspan="2" rowspan="2">Ref clk</td><td colspan="2" rowspan="2">Data Rate</td><td colspan="3">ARM PLL CONFIG</td><td rowspan="2">1</td><td rowspan="2">1</td><td rowspan="2">1</td><td rowspan="2">0</td><td>HyperLink (ARM Master)</td></tr>
<tr><td colspan="3">SerDes Cfg</td><td>HyperLink (DSP Master)</td></tr>
<tr><td>X</td><td>X</td><td>X</td><td>X</td><td rowspan="2">Port</td><td colspan="3">ARM PLL CONFIG</td><td rowspan="2">Min</td><td rowspan="2">1</td><td rowspan="2">1</td><td rowspan="2">1</td><td>UART (ARM Master)</td></tr>
<tr><td>X</td><td>X</td><td>X</td><td>X</td><td>X</td><td>X</td><td>X</td><td>UART (DSP Master)</td></tr>
</table>

10.1.2.1 Boot Device Field

The Boot Device field BOOTMODE[16-14-4-3-2-1] bits define the boot device that is chosen and the BOOTMODE[8] bit defines the boot master that is chosen. Table 10-3 shows the supported boot modes.

Table 10-3. Boot Mode Pins: Boot Device Values

Bit	Field	Description
16, 14, 4, 3, 2, 1	Boot Device	Device boot mode • ARM is a boot master when BOOTMODE[8]=0 – Sleep = X0[Min]000b – I^2C Slave = [Slave Addr1]1[Min]000b – I^2C Master = X1[Min]001b – SPI = [Width][Csel0][Min]010b – EMIF = 0[BaseAddr0][Min]011b – NAND = 1[BaseAddr0][Min]011b – Serial Rapid I/O = [Lane][Ref Clock0][Min]100b – Ethernet (SGMII) = [Pa clk][Ref Clk0][Min]101b – PCI = [Ref clk][Bar Config2]0110b – HyperLink = [Port][Ref Clk0]1110b – UART = XX[Min]111b • C66x is a boot master when BOOTMODE[8]=1 – Sleep = X0[Min]000b – I^2C Slave = [Slave Addr1]1[Min]000b – I^2C Master = X1[Min]001b – SPI = [Width][Csel0][Min]010b – EMIF = 0[BaseAddr0][Min]011b – NAND = 1[BaseAddr0][Min]011b – Serial Rapid I/O = [Lane][Ref Clock0][Min]100b – Ethernet (SGMII) = [Pa clk][Ref Clk0][Min]101b – PCI = [Ref clk][Bar Config2]0110b – HyperLink = [Port][Ref Clk0]1110b – UART = XX[Min]111b

10.1.2.2 Device Configuration Field

The device configuration fields DEVSTAT[16:1] are used to configure the boot peripheral and, therefore, the bit definitions depend on the boot mode.

10.1.2.2.1 Sleep Boot Mode Configuration

Figure 10-2. Sleep Boot Mode Configuration Fields

DEVSTAT Boot Mode Pins ROM Mapping															
16	15	14	13	12	11	10	9	8	7	6	5	4	3	2	1	0
X	X	0	ARMen	SYSEN	ARM PLL Cfg			Boot Master	Sys PLL Config			Min	000			Lendian

Table 10-4. Sleep Boot Configuration Field Descriptions

Bit	Field	Description
16-15	Reserved	Reserved
14	Boot Devices	Boot Device- used in conjunction with Boot Devices [Used in conjunction with bits 3-1] • 0 = Sleep (default) • Others = Other boot modes
13	ARMen	Enable the ARM PLL • 0 = PLL disabled • 1 = PLL enabled

Copyright © 2012–2017, Texas Instruments Incorporated

Table 10-4. Sleep Boot Configuration Field Descriptions (continued)

Bit	Field	Description
12	SYSEN	Enable the System PLL • 0 = PLL disabled (default) • 1 = PLL enabled
11-9	ARM PLL Setting	The PLL default settings are determined by the [11:9] bits. This will set the PLL to the maximum clock setting for the device. Table 10-27 shows settings for various input clock frequencies.
8	Boot Master	Boot Master select • 0 = ARM is boot master • 1 = C66x is boot master
7-5	SYS PLL Setting	The PLL default settings are determined by the [7:5] bits. This will set the PLL to the maximum clock setting for the device. Table 10-27 shows settings for various input clock frequencies.
4	Min	Minimum boot configuration select bit. • 0 = Minimum boot pin select disabled • 1 = Minimum boot pin select enabled. When Min = 1, a predetermined set of values is configured (see the Device Configuration Field Descriptions table for configuration bits with a "(default)" tag added in the description column). When Min = 0, all fields must be independently configured.
3-1	Boot Devices	Boot Devices[3:1] used in conjunction with Boot Device [14] • 000 = Sleep • Others = Other boot modes
0	Lendian	Endianess (device) • 0 = Big endian • 1 = Little endian

10.1.2.2 I²C Boot Device Configuration

10.1.2.2.1 I²C Passive Mode

In passive mode, the device does not drive the clock, but simply acks data received on the specified address.

Figure 10-3. I²C Passive Mode Device Configuration Fields

DEVSTAT Boot Mode Pins ROM Mapping																
16	15	14	13	12	11	10	9	8	7	6	5	4	3	2	1	0
Slave Addr		1	Port		ARM PLL Cfg			Boot Master	Sys PLL Config			Min	000			Lendian

Table 10-5. I²C Passive Mode Device Configuration Field Descriptions

Bit	Field	Description
16-15	Slave Addr	I²C Slave boot bus address • 0 = I²C slave boot bus address is 0x00 • 1 = I²C slave boot bus address is 0x10 (default) • 2 = I²C slave boot bus address is 0x20 • 3 = I²C slave boot bus address is 0x30
14	Boot Devices	Boot Device[14] used in conjunction with Boot Devices [Use din conjunction with bits 3-1] • 0 = Other boot modes • 1= I²C Slave boot mode
13-12	Port	I²C port number • 0 = I²C0 • 1 = I²C1 • 2 = I²C2 • 3 = Reserved
11-9	ARM PLL Setting	The PLL default settings are determined by the [11:9] bits. This will set the PLL to the maximum clock setting for the device. Table 10-27 shows settings for various input clock frequencies.

Table 10-5. I²C Passive Mode Device Configuration Field Descriptions (continued)

Bit	Field	Description
8	Boot Master	Boot Master select • 0 = ARM is boot master • 1 = C66x is boot master
7-5	SYS PLL Setting	The PLL default settings are determined by the [7:5] bits. This will set the PLL to the maximum clock setting for the device. Table 10-27 shows settings for various input clock frequencies.
4	Min	Minimum boot configuration select bit. • 0 = Minimum boot pin select disabled • 1 = Minimum boot pin select enabled. When Min = 1, a predetermined set of values is configured (see the Device Configuration Field Descriptions table for configuration bits with a "(default)" tag added in the description column). When Min = 0, all fields must be independently configured.
3-1	Boot Devices	Boot Devices[3:1] used in conjunction with Boot Device [14] • 000 = I²C Slave • Others = Other boot modes
0	Lendian	Endianess • 0 = Big endian • 1 = Little endian

10.1.2.2.2.2 I²C Master Mode

In master mode, the I²C device configuration uses 10 bits of device configuration instead of seven as used in other boot modes. In this mode, the device makes the initial read of the I²C EEPROM while the PLL is in bypass mode. The initial read contains the desired clock multiplier, which must be set up prior to any subsequent reads.

Figure 10-4. I²C Master Mode Device Configuration Fields

DEVSTAT Boot Mode Pins ROM Mapping																
16	15	14	13	12	11	10	9	8	7	6	5	4	3	2	1	0
Reserved			Bus Addr		Param Idx/Offset			Boot Master	Reserved	Port		Min	001			Lendian

Table 10-6. I²C Master Mode Device Configuration Field Descriptions

Bit	Field	Description
16-14	Reserved	Reserved
13-12	Bus Addr	I²C bus address slave device • 0 = I²C slave boot bus address is 0x50 (default) • 1 = I²C slave boot bus address is 0x51 • 2 = I²C slave boot bus address is 0x52 • 3 = I²C slave boot bus address is 0x53
11-9	Param Idx/Offset	Parameter Table Index: 0-7 This value specifies the parameter table index when the C66x is the boot master This value specifies the start read address at 8K times this value when the ARM is the boot master
8	Boot Master	Boot Master select • 0 = ARM is boot master • 1 = C66x is boot master
7	Reserved	• Reserved
6-5	Port	I²C port number • 0 = I²C0 (default) • 1 = I²C1 • 2 = I²C2 • 3 = Reserved

Copyright © 2012–2017, Texas Instruments Incorporated

Table 10-6. I²C Master Mode Device Configuration Field Descriptions (continued)

Bit	Field	Description
4	Min	Minimum boot configuration select bit. • 0 = Minimum boot pin select disabled • 1 = Minimum boot pin select enabled. When Min = 1, a predetermined set of values is configured (see the Device Configuration Field Descriptions table for configuration bits with a "(default)" tag added in the description column). When Min = 0, all fields must be independently configured.
3-1	Boot Devices	Boot Devices[3:1] • 001 = I²C Master • Others = Other boot modes
0	Lendian	Endianess • 0 = Big endian • 1 = Little endian

10.1.2.2.3 SPI Boot Device Configuration

Figure 10-5. SPI Device Configuration Fields

DEVSTAT Boot Mode Pins ROM Mapping															
16	15	14	13	12	11	10	9	8	7	6	5	4	3	2	1	0
Width	Csel		Mode		Param Idx/Offset			Boot Master	Npin	Port		Min	010			Lendian

Table 10-7. SPI Device Configuration Field Descriptions

Bit	Field	Description
16	Width	SPI address width configuration • 0 = 16-bit address values are used • 1 = 24-bit address values are used (default)
15-14	Csel	The chip select field value 0-3 (default = 0)
13-12	Mode	Clk Polarity/ Phase • 0 = Data is output on the rising edge of SPICLK. Input data is latched on the falling edge. • 1 = Data is output one half-cycle before the first rising edge of SPICLK and on subsequent falling edges. Input data is latched on the rising edge of SPICLK. • 2 = Data is output on the falling edge of SPICLK. Input data is latched on the rising edge (default). • 3 = Data is output one half-cycle before the first falling edge of SPICLK and on subsequent rising edges. Input data is latched on the falling edge of SPICLK.
11-9	Param Idx/Offset	Parameter Table Index: 0-7 This value specifies the parameter table index when the C66x is the boot master This value specifies the start read address at 8K times this value when the ARM is the boot master
8	Boot Master	Boot Master select • 0 = ARM is boot master (default) • 1 = C66x is boot master
7	Npin	Selected Chip Select driven • 0 = CS0 to the selected chip select is driven • 1 = CS0-CS3 to the selected chip select are driven (default)
6-5	Port	Specify SPI port • 0 = SPI0 used (default) • 1 = SPI1 used • 2 = SPI2 used • 3 = Reserved

Copyright © 2012–2017, Texas Instruments Incorporated

Table 10-7. SPI Device Configuration Field Descriptions (continued)

Bit	Field	Description
4	Min	Minimum boot configuration select bit. • 0 = Minimum boot pin select disabled • 1 = Minimum boot pin select enabled. When Min = 1, a predetermined set of values is configured (see the Device Configuration Field Descriptions table for configuration bits with a "(default)" tag added in the description column). When Min = 0, all fields must be independently configured.
3-1	Boot Devices	Boot Devices[3:1] • 010 = SPI boot mode • Others = Other boot modes
0	Lendian	Endianess • 0 = Big endian • 1 = Little endian

10.1.2.2.4 EMIF Boot Device Configuration

Figure 10-6. EMIF Boot Device Configuration Fields

DEVSTAT Boot Mode Pins ROM Mapping																
16	**15**	**14**	**13**	**12**	**11**	**10**	**9**	**8**	**7**	**6**	**5**	**4**	**3**	**2**	**1**	**0**
0	Base Addr		Wait	Width	X	Chip Sel		Boot Master=1	Sys PLL Cfg			0	011			Lendian
0	Base Addr		Wait	Width	ARM PLL Cfg			Boot Master=0	Sys PLL Cfg			0	011			Lendian

Table 10-8. EMIF Boot Device Configuration Field Descriptions

Bit	Field	Description
16	Boot Devices	Boot Devices[16] used conjunction with Boot Devices[4] and Boot Devices [Used in conjunction with bits 3-1] • 0 = EMIF boot mode • 1 = Other boot modes
15-14	Base Addr	Base address (0-3) used to calculate the branch address. Branch address is the chip select plus Base Address *16MB
13	Wait	Extended Wait • 0 = Extended Wait disabled • 1 = Extended Wait enabled
12	Width	EMIF Width • 0 = 8-bit EMIF Width • 1 = 16-bit EMIF Width
11-9	Chip Sel/ARM PLL Setting	When Boot Master = 0 (ARM is Boot Master), Pin[11:9] used as ARM PLL Setting and the chip select region CS0 is used. The PLL default settings are determined by the [11:9] bits. This will set the PLL to the maximum clock setting for the device. Table 10-27 shows settings for various input clock frequencies. When Boot Master =1 (C66x is Boot Master), Pin[10:9] used as Chip Sel that specifies the chip select region, CS0-CS3. • 00 = CS0 (EMIFCE0) • 01 = CS1 (EMIFCE1) • 10 = CS2 (EMIFCE2) • 11 = CS3 (EMIFCE3)
8	Boot Master	Boot Master select • 0 = ARM is boot master • 1 = C66x is boot master
7-5	SYS PLL Setting	The PLL default settings are determined by the [7:5] bits. This will set the PLL to the maximum clock setting for the device. Table 10-27 shows settings for various input clock frequencies.

Copyright © 2012–2017, Texas Instruments Incorporated

Table 10-8. EMIF Boot Device Configuration Field Descriptions (continued)

Bit	Field	Description
4	Boot Devices	Boot Devices[4] used conjunction with Boot Devices[16] and Boot Devices [Use din conjunction with bits 3-1] • 0 = EMIF boot mode • 1 = Other boot modes
3-1	Boot Devices	Boot Devices[3:1] used in conjunction with Boot Device [4] • 011 = EMIF boot mode • Others = Other boot modes
0	Lendian	Endianess • 0 = Big endian • 1 = Little endian

10.1.2.2.5 NAND Boot Device Configuration

Figure 10-7. NAND Boot Device Configuration Fields

DEVSTAT Boot Mode Pins ROM Mapping																
16	**15**	**14**	**13**	**12**	**11**	**10**	**9**	**8**	**7**	**6**	**5**	**4**	**3**	**2**	**1**	**0**
1	First Block			Clear	X	Chip Sel		Boot Master=1	Sys PLL Cfg			Min	011			Lendian
1	First Block			Clear	ARM PLL Cfg			Boot Master=0	Sys PLL Cfg			Min	011			Lendian

Table 10-9. NAND Boot Device Configuration Field Descriptions

Bit	Field	Description
16	Boot Devices	Boot Devices[16] used conjunction with Boot Devices [3-1] • 0 = Other boot modes • 1 = NAND boot mode
15-13	First Block	First Block. This value is used to calculate the first block read. The first block read is the first block value *16.
12	Clear	ClearNAND • 0 = Device is not a ClearNAND (default) • 1 = Device is a ClearNAND
11-9	Chip Sel/ARM PLL Setting	When Boot Master = 0 (ARM is Boot Master), Pin[11:9] used as ARM PLL Setting and the chip select region CS2 is used. The PLL default settings are determined by the [11:9] bits. This will set the PLL to the maximum clock setting for the device. Table 10-27 shows settings for various input clock frequencies. When Boot Master =1 (C66x is Boot Master), Pin[10:9] used as Chip Sel that specifies the chip select region, CS2-CS5. • 00 = CS2 • 01 = CS3 • 10 = CS4 • 11 = CS5
8	Boot Master	Boot Master select • 0 = ARM is boot master (default) • 1 = C66x is boot master
7-5	SYS PLL Setting	The PLL default settings are determined by the [7:5] bits. This will set the PLL to the maximum clock setting for the device. Table 10-27 shows settings for various input clock frequencies.
4	Min	Minimum boot pin select. When Min is 1, it means that the BOOTMODE [15:3] pins are don't cares. Only BOOTMODE [2:0] pins (DEVSTAT[3:1]) will determine boot. Default values are assigned to values that would normally be set by the other BOOTMODE pins when Min is 0. • 0 = Minimum boot pin select disabled • 1 = Minimum boot pin select enabled.
3-1	Boot Devices	Boot Devices • 011 = NAND boot mode • Others = Other boot modes

Copyright © 2012–2017, Texas Instruments Incorporated

Table 10-9. NAND Boot Device Configuration Field Descriptions (continued)

Bit	Field	Description
0	Lendian	Endianess • 0 = Big endian • 1 = Little endian

10.1.2.3 Serial Rapid I/O Boot Device Configuration

The device ID is always set to 0xff (8-bit node IDs) or 0xffff (16 bit node IDs) at power-on reset.

Figure 10-8. Serial Rapid I/O Boot Device Configuration Fields

DEVSTAT Boot Mode Pins ROM Mapping															
16	15	14	13	12	11	10	9	8	7	6	5	4	3	2	1	0
X	Ref Clock		Data Rate		Lane Setup			Boot Master=1	Sys PLL Cfg			Min	100			Lendian
Lane	Ref Clock		Data Rate		ARM PLL Cfg			Boot Master=0	Sys PLL Cfg			Min	100			Lendian

Table 10-10. Serial Rapid I/O Boot Device Configuration Field Descriptions

Bit	Field	Description
16	Lane	When Boot Master =0 (ARM is Boot Master), Pin[16] is used as Lane. • 0 = 4 ports, each 1 lane wide (default) • 1 = 2 ports, each 2 lanes wide When Boot Master =1 (C66x is Boot Master), Pin[16] is reserved.
15-14	Ref Clock	SRIO Reference clock frequency • 0 = 125 MHz • 1 = 156.25 MHz (default) • 2 = Reserved • 3 = Reserved
13-12	Data Rate	SRIO Data Rate • 0 = 1.25GB • 1 = 2.5GB • 2 = 3.125GB • 3 = 5GB (default)
11-9	Lane Setup/ARM PLL Setting	When Boot Master =0 (ARM is Boot Master), pin[11:9] used as ARM PLL Setting with all lanes enabled. The PLL default settings are determined by the [11:9] bits. This will set the PLL to the maximum clock setting for the device. The default value is 156.26 MHz. Table 10-27 shows settings for various input clock frequencies. When Boot Master =1 (C66x is Boot Master), pin [11:9] are used as Lane Set up. • 0 = 4 ports, each 1 lane wide (default) • 1 = 3 ports, lanes 0, 1 form a 2 lane port, lane 2,3 are single ports • 2 = 3 ports, lanes 0, 1 are single lane ports, lanes 2,3 form a 2 lane port • 3 = 2 ports, lane 0, 1 are one port, lane 2, 3 are a second port • 4 = 1 port, 4 lanes wide • 5-7 = 4 ports, each 1 lane wide
8	Boot Master	Boot Master select • 0 = ARM is boot master (default) • 1 = C66x is boot master
7-5	SYS PLL Setting	The PLL default settings are determined by the [7:5] bits. This will set the PLL to the maximum clock setting for the device. Default system reference clock is 156.25 MHz. Table 10-27 shows settings for various input clock frequencies. (default = 4)
4	Min	Minimum boot configuration select bit. • 0 = Minimum boot pin select disabled • 1 = Minimum boot pin select enabled. When Min = 1, a predetermined set of values is configured (see the Device Configuration Field Descriptions table for configuration bits with a "(default)" tag added in the description column). When Min = 0, all fields must be independently configured.

Copyright © 2012–2017, Texas Instruments Incorporated

Table 10-10. Serial Rapid I/O Boot Device Configuration Field Descriptions (continued)

Bit	Field	Description
3-1	Boot Devices	Boot Devices • 100 = SRIO boot mode • Others = Other boot modes
0	Lendian	Endianess • 0 = Big endian • 1 = Little endian

In SRIO boot mode, both the message mode and DirectIO mode will be enabled by default. If use of the memory reserved for received messages is required and reception of messages cannot be prevented, the master can disable the message mode by writing to the boot table and generating a boot restart.

10.1.2.4 Ethernet (SGMII) Boot Device Configuration

Figure 10-9. Ethernet (SGMII) Boot Device Configuration Fields

DEVSTAT Boot Mode Pins ROM Mapping																
16	15	14	13	12	11	10	9	8	7	6	5	4	3	2	1	0
Pa clk	Ref Clock		Ext Con		Lane Setup			Boot Master=1	Sys PLL Cfg			Min	101			Lendian
Pa clk	Ref Clock		Ext Con		ARM PLL Cfg			Boot Master=0	Sys PLL Cfg			Min	101			Lendian

Table 10-11. Ethernet (SGMII) Boot Device Configuration Field Descriptions

Bit	Field	Description
16	Pa clk	PA clock reference • 0 = PA clocked at the same reference as the core reference • 1 = PA clocked at the same reference as the SerDes reference (default)
15-14	Ref Clock	SRIO Reference clock frequency • 0 = 125 MHz • 1 = 156.25 MHz (default) • 2 = Reserved • 3 = Reserved
13-12	Ext Con	External connection mode • 0 = MAC to MAC connection, master with auto negotiation • 1 = MAC to MAC connection, slave with auto negotiation (default) • 2 = MAC to MAC, forced link, maximum speed • 3 = MAC to fiber connection
11-9	Lane Setup/ARM PLL Setting	When Boot Master = 0 (ARM is Boot Master), pin[11:9] used as ARM PLL Setting. The PLL default settings are determined by the [11:9] bits. This will set the PLL to the maximum clock setting for the device. Table 10-27 shows settings for various input clock frequencies. When Boot Master =1 (C66x is Boot Master), pin [10:9] are used as Lane Set up. • 0 = All SGMII ports enabled (default) • 1 = Only SGMII port 0 enabled • 2 = SGMII port 0 and 1 enabled • 3 = SGMII port 0, 1 and 2 enabled • 4-7 = Reserved
8	Boot Master	Boot Master select • 0 = ARM is boot master (default) • 1 = C66x is boot master
7-5	SYS PLL Setting	The PLL default settings are determined by the [7:5] bits. This will set the PLL to the maximum clock setting for the device. Default system reference clock is 156.25 MHz. Table 10-27 shows settings for various input clock frequencies. (default = 4)

Copyright © 2012–2017, Texas Instruments Incorporated

Table 10-11. Ethernet (SGMII) Boot Device Configuration Field Descriptions (continued)

Bit	Field	Description
4	Min	Minimum boot configuration select bit. • 0 = Minimum boot pin select disabled • 1 = Minimum boot pin select enabled. When Min = 1, a predetermined set of values is configured (see the Device Configuration Field Descriptions table for configuration bits with a "(default)" tag added in the description column). When Min = 0, all fields must be independently configured.
3-1	Boot Devices	Boot Devices • 101 = Ethernet boot mode • Others = Other boot modes
0	Lendian	Endianess • 0 = Big endian • 1 = Little endian

10.1.2.4.1 PCIe Boot Device Configuration

Figure 10-10. PCIe Boot Device Configuration Fields

DEVSTAT Boot Mode Pins ROM Mapping															
16	15	14	13	12	11	10	9	8	7	6	5	4	3	2	1	0
Ref clk	Bar Config				Reserved			Boot Master=1	Sys PLL Cfg			0110				Lendian
Ref clk	Bar Config				ARM PLL Cfg			Boot Master=0	Sys PLL Cfg			0110				Lendian

Table 10-12. PCIe Boot Device Configuration Field Descriptions

Bit	Field	Description
16	Ref clk	PCIe Reference clock frequency • 0 = 100MHz • 1 = Reserved
15-12	Bar Config	PCIe BAR registers configuration This value can range from 0 to 0xf. See Table 10-13.
11-9	Reserved/ARM PLL Setting	When Boot Master =0 (ARM is Boot Master), pin[11:9] used as ARM PLL Setting. The PLL default settings are determined by the [11:9] bits. This will set the PLL to the maximum clock setting for the device. Table 10-27 shows settings for various input clock frequencies. When Boot Master =1 (C66x is Boot Master), pin [10:9] are reserved.
8	Boot Master	Boot Master select • 0 = ARM is boot master (default) • 1 = C66x is boot master
7-5	SYS PLL Setting	The PLL default settings are determined by the [7:5] bits. This will set the PLL to the maximum clock setting for the device. Default system reference clock is 156.25 MHz. Table 10-27 shows settings for various input clock frequencies.
4-1	Boot Devices	Boot Devices[4:1] • 0110 = PCIe boot mode • Others = Other boot modes
0	Lendian	Endianess • 0 = Big endian • 1 = Little endian

Copyright © 2012–2017, Texas Instruments Incorporated

Table 10-13. BAR Config / PCIe Window Sizes

BAR CFG	BAR0	32-BIT ADDRESS TRANSLATION					64-BIT ADDRESS TRANSLATION	
		BAR1	BAR2	BAR3	BAR4	BAR5	BAR2/3	BAR4/5
0b0000	PCIe MMRs	32	32	32	32	Clone of BAR4		
0b0001		16	16	32	64			
0b0010		16	32	32	64			
0b0011		32	32	32	64			
0b0100		16	16	64	64			
0b0101		16	32	64	64			
0b0110		32	32	64	64			
0b0111		32	32	64	128			
0b1000		64	64	128	256			
0b1001		4	128	128	128			
0b1010		4	128	128	256			
0b1011		4	128	256	256			
0b1100							256	256
0b1101							512	512
0b1110							1024	1024
0b1111							2048	2048

10.1.2.4.2 HyperLink Boot Device Configuration

Figure 10-11. HyperLink Boot Device Configuration Fields

DEVSTAT Boot Mode Pins ROM Mapping																
16	15	14	13	12	11	10	9	8	7	6	5	4	3	2	1	0
Port	RefClk		Data Rate		Reserved			Boot Master=1	Sys PLL Cfg			1110				Lendian
Port	RefClk		Data Rate		ARM PLL Cfg			Boot Master=0	Sys PLL Cfg			1110				Lendian

Table 10-14. HyperLink Boot Device Configuration Field Descriptions

Bit	Field	Description
16	Port	HyperLink port • 0 = HyperLink0 • 1 = HyperLink1
15-14	Ref Clocks	HyperLink reference clock configuration • 0 = 125 MHz • 1 = 156.25 MHz • 2-3 = Reserved
13-12	Data Rate	HyperLink data rate configuration • 0 = 1.25 GBs • 1 = 3.125 GBs • 2 = 6.25 GBs • 3 = 12.5 GBs
11-9	Reserved/ARM PLL Setting	When Boot Master =0 (ARM is Boot Master), pin[11:9] used as ARM PLL Setting. The PLL default settings are determined by the [11:9] bits. This will set the PLL to the maximum clock setting for the device. Table 10-27 shows settings for various input clock frequencies. When Boot Master =1 (C66x is Boot Master), pin [10:9] are reserved.
8	Boot Master	Boot Master select • 0 = ARM is boot master (default) • 1 = C66x is boot master

Copyright © 2012–2017, Texas Instruments Incorporated

Table 10-14. HyperLink Boot Device Configuration Field Descriptions (continued)

Bit	Field	Description
7-5	SYS PLL Setting	The PLL default settings are determined by the [7:5] bits. This will set the PLL to the maximum clock setting for the device. Default system reference clock is 156.25 MHz. Table 10-27 shows settings for various input clock frequencies.
4-1	Boot Devices	Boot Devices[4:1] • 1110 = HyperLink boot mode • Others = Other boot modes
0	Lendian	Endianess • 0 = Big endian • 1 = Little endian

10.1.2.4.3 UART Boot Device Configuration

Figure 10-12. UART Boot Mode Configuration Field Description

DEVSTAT Boot Mode Pins ROM Mapping																
16	**15**	**14**	**13**	**12**	**11**	**10**	**9**	**8**	**7**	**6**	**5**	**4**	**3**	**2**	**1**	**0**
X	X	X	X	Port	X	X	X	Boot Master=1	Sys PLL Config			Min	111			Lendian
X	X	X	X	Port	ARM PLL Cfg			Boot Master=0	Sys PLL Config			Min	111			Lendian

Table 10-15. UART Boot Configuration Field Descriptions

Bit	Field	Description
16-13	Reserved	Not Used
12	Port	UART Port number • 0 = UART0 • 1 = UART1
11-9	ARM PLL Setting	The PLL default settings are determined by the [11:9] bits. This will set the PLL to the maximum clock setting for the device. Table 10-27 shows settings for various input clock frequencies.
8	Boot Master	Boot Master select • 0 = ARM is boot master • 1 = C66x is boot master
7-5	SYS PLL Setting	The PLL default settings are determined by the [7:5] bits. This will set the PLL to the maximum clock setting for the device. Table 10-27 shows settings for various input clock frequencies. (default = 4)
4	Min	Minimum boot configuration select bit. • 0 = Minimum boot pin select disabled • 1 = Minimum boot pin select enabled. When Min = 1, a predetermined set of values is configured (see the Device Configuration Field Descriptions table for configuration bits with a "(default)" tag added in the description column). When Min = 0, all fields must be independently configured.
3-1	Boot Devices	Boot Devices[3:1] • 111 = UART boot mode • Others = Other boot modes
0	Lendian	Endianess • 0 = Big endian • 1 = Little endian

10.1.2.5 Boot Parameter Table

The ROM Bootloader (RBL) uses a set of tables to carry out the boot process. The boot parameter table is the most common format the RBL employs to determine the boot flow. These boot parameter tables have certain parameters common across all the boot modes, while the rest of the parameters are unique to the boot modes. The common entries in the boot parameter table are shown in Table 10-16.

Copyright © 2012–2017, Texas Instruments Incorporated

Table 10-16. Boot Parameter Table Common Parameters

BYTE OFFSET	NAME	DESCRIPTION
0	Length	The length of the table, including the length field, in bytes.
2	Checksum	The 16 bits ones complement of the ones complement of the entire table. A value of 0 will disable checksum verification of the table by the boot ROM.
4	Boot Mode	Internal values used by RBL for different boot modes.
6	Port Num	Identifies the device port number to boot from, if applicable
8	SW PLL, MSW	PLL configuration, MSW
10	SW PLL, LSW	PLL configuration, LSW
12	Sec PLL Config, MSW	ARM PLL configuration, MSW
14	Sec PLL Config, LSW	ARM PLL configuration, LSW
16	System Freq	The frequency of the system clock in MHz
18	Core Freq	The frequency of the core clock in MHz
20	Boot Master	Set to TRUE if C66x is the master core.

10.1.2.5.1 EMIF16 Boot Parameter Table

Table 10-17. EMIF16 Boot Parameter Table

BYTE OFFSET	NAME	DESCRIPTION	CONFIGURED THROUGH BOOT CONFIGURATION PINS
22	Options	Async Config Parameters are used. • 0 = Value in the async config paramters are not used to program async config registers. • 1 = Value in the async config paramters are used to program async config registers.	NO
24	Type	Set to 0 for EMIF16 (NOR) boot	NO
26	Branch Address MSW	Most significant bit for Branch address (depends on chip select)	YES
28	Branch Address LSW	Least significant bit for Branch address (depends on chip select)	YES
30	Chip Select	Chip Select for the NOR flash	YES
32	Memory Width	Memory width of the EMIF16 bus (16 bits)	YES
34	Wait Enable	Extended wait mode enabled • 0 = Wait enable is disabled • 1 = Wait enable is enabled	YES
36	Async Config MSW	Async Config Register MSW	NO
38	Async Config LSW	Async Config Register LSW	NO

Copyright © 2012–2017, Texas Instruments Incorporated

10.1.2.5.2 SRIO Boot Parameter Table

Table 10-18. SRIO Boot Parameter Table

BYTE OFFSET	NAME	DESCRIPTION	CONFIGURED THROUGH BOOT CONFIGURATION PINS
22	Options	Bit 0 Tx enable • 0 = SRIO Transmit disable • 1 = SRIO Transmit Enable Bit 1 Mailbox Enable • 0 = Mailbox mode disabled. (SRIO boot is in DirectIO mode). • 1 = Mailbox mode enabled. (SRIO boot is in Messaging mode). Bit 2 Bypass Configuration • 0 = Configure the SRIO • 1 = Bypass SRIO configuration Bit 3 Bypass QM Configuration • 0 = Configure the QM and CPDMA • 1 = Bypass the QM and CPDMA configuration Bit 4 PLL setup • 0 = SERDES Configuration registers are taken without modification. • 1 = SERDES Configuration are modified based on the reference clock and link rate. Bit 5-15 = Reserved	NO
24	Lane Setup	• 0b0000 = SRIO configured as four 1x ports • 0b0001 = SRIO configured as 3 ports (2x, 1x, 1x) • 0b0010 = SRIO configured as 3 ports (1x, 1x, 2x) • 0b0011 =SRIO configured as 2 ports (2x, 2x) • 0b0100 = SRIO configured as 1 4x port • 0b 0101-0bffff = Reserved	YES (but not all lane setup are possible through the boot configuration pins)
26	Reserved	Reserved	NA
28	Node ID	The node ID value to set for this device	NO
30	SerDes ref clk	The SerDes reference clock frequency, in 1/100 MHZ	YES
32	Link Rate	Link rate, MHz	YES
34	PF Low	Packet forward address range, low value	NO
36	PF High	Packet Forward address range, high value	NO
38	Promiscuous Mask	The bit is set for each lane/port that is configured as promiscuous	NO
40	Time-out Sec	Number of seconds before time-out. The value 0 disables the time-out.	NO
44	SERDES Aux, MSW	SERDES Auxillary Register Configuration, MSW	NO
48	SERDES Aux, LSW	SERDES Auxillary Register Configuration, LSW	NO
52	SERDES Rx Lane0 MSW	SERDES Rx Configuration, Lane0, MSW	NO
56	SERDES Rx Lane0 LSW	SERDES Rx Configuration, Lane0, LSW	NO
60	SERDES Rx Lane1 MSW	SERDES Rx Configuration, Lane1, MSW	NO
64	SERDES Rx Lane1 LSW	SERDES Rx Configuration, Lane1, LSW	NO
68	SERDES Rx Lane2 MSW	SERDES Rx Configuration, Lane2, MSW	NO
72	SERDES Rx Lane2 LSW	SERDES Rx Configuration, Lane2, LSW	NO
76	SERDES Rx Lane3 MSW	SERDES Rx Configuration, Lane3, MSW	NO

Copyright © 2012–2017, Texas Instruments Incorporated

Table 10-18. SRIO Boot Parameter Table (continued)

BYTE OFFSET	NAME	DESCRIPTION	CONFIGURED THROUGH BOOT CONFIGURATION PINS
80	SERDES Rx Lane3 LSW	SERDES Rx Configuration, Lane3, LSW	NO

10.1.2.5.3 Ethernet Boot Parameter Table

Table 10-19. Ethernet Boot Parameter Table

BYTE OFFSET	NAME	DESCRIPTION	CONFIGURED THROUGH BOOT CONFIGURATION PINS
22	Options	Bits 02-00 Interface • 000-100 = Reserved • 101 = SGMII • 110 = Reserved • 111 = Reserved Bits 03 HD • 0 = Half Duplex • 1 = Full Duplex Bit 4 Skip TX • 0 = Send Ethernet Ready Frame every 3 seconds • 1 = Don't send Ethernet Ready Frame Bits 06-05 Initialize Config • 00 = Switch, SerDes, SGMII and PASS are configured • 01 = Initialization is not done for the peripherals that are already enabled and running. • 10 = Reserved • 11 = None of the Ethernet system is configured. Bits 15-07 Reserved	NO
24	MAC High	The 16 MSBs of the MAC address to receive during boot	NO
26	MAC Med	The 16 middle bits of the MAC address to receive during boot	NO
28	MAC Low	The 16 LSBs of the MAC address to receive during boot	NO
30	Multi MAC High	The 16 MSBs of the multicast MAC address to receive during boot	NO
32	Multi MAC Med	The 16 middle bits of the multicast MAC address to receive during boot	NO
34	Multi MAC Low	The 16 LSBs of the multicast MAC address to receive during boot	NO
36	Source Port	The source UDP port to accept boot packets from. A value of 0 will accept packets from any UDP port	NO
38	Dest Port	The destination port to accept boot packets on.	NO
40	Device ID 12	The first 2 bytes of the device ID. This is typically a string value, and is sent in the Ethernet ready frame	NO
42	Device ID 34	The second 2 bytes of the device ID.	NO
44	Dest MAC High	The 16 MSBs of the MAC destination address used for the Ethernet ready frame. Default is broadcast.	NO
46	Dest MAC Med	The 16 middle bits of the MAC destination address	NO
48	Dest MAC Low	The 16 LSBs of the MAC destination address	NO
50	Lane Enable	One bit per lane. • 0 = Lane disabled • 1 = Lane enabled	

Copyright © 2012–2017, Texas Instruments Incorporated

Table 10-19. Ethernet Boot Parameter Table (continued)

BYTE OFFSET	NAME	DESCRIPTION	CONFIGURED THROUGH BOOT CONFIGURATION PINS
52	SGMII Config	Bits 0-3 are the config index, bit 4 set if direct config used, bit 5 set if no configuration done	NO
54	SGMII Control	The SGMII control register value	NO
56	SGMII Adv Ability	The SGMII ADV Ability register value	NO
58	SGMII TX Cfg High	The 16 MSBs of the SGMII Tx config register	NO
60	SGMII TX Cfg Low	The 16 LSBs of the SGMII Tx config register	NO
62	SGMII RX Cfg High	The 16 MSBs of the SGMII Rx config register	NO
64	SGMII RX Cfg Low	The 16 LSBs of the SGMII Rx config register	NO
66	SGMII Aux Cfg High	The 16 MSBs of the SGMII Aux config register	NO
68	SGMII Aux Cfg Low	The 16 LSBs of the SGMII Aux config register	NO
70	PKT PLL Cfg MSW	The packet subsystem PLL configuration, MSW	NO
72	PKT PLL CFG LSW	The packet subsystem PLL configuration, LSW	NO

10.1.2.5.4 PCIe Boot Parameter Table

Table 10-20. PCIe Boot Parameter Table

BYTE OFFSET	NAME	DESCRIPTION	CONFIGURED THROUGH BOOT CONFIGURATION PINS
22	Options	Bits 00 Mode • 0 = Host Mode (Direct boot mode) • 1 = Boot Table Boot Mode Bits 01 Configuration of PCIe • 0 = PCIe is configured by RBL • 1 = PCIe is not configured by RBL Bit 03-02 Reserved Bits 04 Multiplier • 0 = SERDES PLL configuration is done based on SERDES register values • 1 = SERDES PLL configuration based on the reference clock values Bits 05-15 Reserved	NO
24	Address Width	PCI address width, can be 32 or 64	YES with in conjunction with BAR sizes
26	Link Rate	SerDes frequency, in Mbps. Can be 2500 or 5000	NO
28	Reference clock	Reference clock frequency, in units of 10 kHz. Value values are 10000 (100 MHz), 12500 (125 MHz), 15625 (156.25 MHz), 25000 (250 MHz) and 31250 (312.5 MHz). A value of 0 means that value is already in the SerDes cfg parameters and will not be computed by the boot ROM.	NO
30	Window 1 Size	Window 1 size.	YES
32	Window 2 Size	Window 2 size.	YES
34	Window 3 Size	Window 3 size. Valid only if address width is 32.	YES
36	Window 4 Size	Window 4 Size. Valid only if the address width is 32.	YES
38	Vendor ID	Vendor ID	NO
40	Device ID	Device ID	NO
42	Class code Rev ID MSW	Class code revision ID MSW	NO
44	Class code Rev ID LSW	Class code revision ID LSW	NO

Copyright © 2012–2017, Texas Instruments Incorporated

Table 10-20. PCIe Boot Parameter Table (continued)

BYTE OFFSET	NAME	DESCRIPTION	CONFIGURED THROUGH BOOT CONFIGURATION PINS
46	SerDes cfg msw	PCIe SerDes config word, MSW	NO
48	SerDes cfg lsw	PCIe SerDes config word, LSW	NO
50	SerDes lane 0 cfg msw	SerDes lane config word, msw lane 0	NO
52	SerDes lane 0 cfg lsw	SerDes lane config word, lsw, lane 0	NO
54	SerDes lane 1 cfg msw	SerDes lane config word, msw, lane 1	NO
56	SerDes lane 1 cfg lsw	SerDes lane config word, lsw, lane 1	NO
58	Time-out period (Secs)	The time-out period. Values 0 disables the time-out.	

10.1.2.5.5 I²C Boot Parameter Table

Table 10-21. I²C Boot Parameter Table

OFFSET	FIELD	VALUE	CONFIGURED THROUGH BOOT CONFIGURATION PINS
22	Option	Bits 02-00 Mode • 000 = Boot Parameter Table Mode • 001 = Boot Table Mode • 010 = Boot Config Mode • 011 = Load GP header format data • 100 = Slave Receive Boot Config Bits 15-03 Reserved	NO
24	Boot Dev Addr	The I²C device address to boot from	YES
26	Boot Dev Addr Ext	Extended boot device address	YES
28	Broadcast Addr	I²C address used to send data in the I²C master broadcast mode.	NO
30	Local Address	The I²C address of this device	NO
34	Bus Frequency	The desired I²C data rate (kHz)	NO
36	Next Dev Addr	The next device address to boot (Used only if boot config option is selected)	NO
38	Next Dev Addr Ext	The extended next device address to boot (Used only if boot config option is selected)	NO
40	Address Delay	The number of CPU cycles to delay between writing the address to an I²C EEPROM and reading data.	NO

10.1.2.5.6 SPI Boot Parameter Table

Table 10-22. SPI Boot Parameter Table

BYTE OFFSET	NAME	DESCRIPTION	CONFIGURED THROUGH BOOT CONFIGURATION PINS
22	Options	Bits 01 and 00 Modes • 00 = Load a boot parameter table from the SPI (Default mode) • 01 = Load boot records from the SPI (boot tables) • 10 = Load boot config records from the SPI (boot config tables) • 11 = Load GP header blob Bits 15- 02= Reserved	NO
24	Address Width	The number of bytes in the SPI device address. Can be 16 or 24 bit	YES
26	NPin	The operational mode, 4 or 5 pin	YES
28	Chipsel	The chip select used (valid in 4 pin mode only). Can be 0-3.	YES
30	Mode	Standard SPI mode (0-3)	YES
32	C2Delay	Setup time between chip assert and transaction	NO

Copyright © 2012–2017, Texas Instruments Incorporated

Table 10-22. SPI Boot Parameter Table (continued)

BYTE OFFSET	NAME	DESCRIPTION	CONFIGURED THROUGH BOOT CONFIGURATION PINS
34	Bus Freq, 100kHz	The SPI bus frequency in kHz.	NO
36	Read Addr MSW	The first address to read from, MSW (valid for 24 bit address width only)	YES
38	Read Addr LSW	The first address to read from, LSW	YES
40	Next Chip Select	Next Chip Select to be used (Used only in boot Config mode)	NO
42	Next Read Addr MSW	The Next read address (used in boot config mode only)	NO
44	Next Read Addr LSW	The Next read address (used in boot config mode only)	NO

10.1.2.5.7 HyperLink Boot Parameter Table

Table 10-23. HyperLink Boot Parameter Table

BYTE OFFSET	NAME	DESCRIPTION	CONFIGURED THROUGH BOOT CONFIGURATION PINS
12	Options	Bits 00 Reserved Bits 01 Configuration of Hyperlink • 0 = HyperLink is configured by RBL • 1 = HyperLink is not configured by RBL Bits 15-02 = Reserved	NO
14	Number of Lanes	Number of Lanes to be configured	NO
16	SerDes cfg msw	PCIe SerDes config word, MSW	NO
18	SerDes cfg lsw	PCIe SerDes config word, LSW	NO
20	SerDes CFG RX lane 0 cfg msw	SerDes RX lane config word, msw lane 0	NO
22	SerDes CFG RXlane 0 cfg lsw	SerDes RX lane config word, lsw, lane 0	NO
24	SerDes CFG TX lane 0 cfg msw	SerDes TX lane config word, msw lane 0	NO
26	SerDes CFG TXlane 0 cfg lsw	SerDes TX lane config word, lsw, lane 0	NO
28	SerDes CFG RX lane 1 cfg msw	SerDes RX lane config word, msw lane 1	NO
30	SerDes CFG RXlane 1 cfg lsw	SerDes RX lane config word, lsw, lane 1	NO
32	SerDes CFG TX lane 1 cfg msw	SerDes TX lane config word, msw lane 1	NO
34	SerDes CFG TXlane 1 cfg lsw	SerDes TX lane config word, lsw, lane 1	NO
36	SerDes CFG RX lane 2 cfg msw	SerDes RX lane config word, msw lane 2	NO
38	SerDes CFG RXlane 2 cfg lsw	SerDes RX lane config word, lsw, lane 2	NO
40	SerDes CFG TX lane 2 cfg msw	SerDes TX lane config word, msw lane 2	NO
42	SerDes CFG TXlane 2 cfg lsw	SerDes TX lane config word, lsw, lane 2	NO
44	SerDes CFG RX lane 3 cfg msw	SerDes RX lane config word, msw lane 3	NO
46	SerDes CFG RXlane 3 cfg lsw	SerDes RX lane config word, lsw, lane 3	NO
48	SerDes CFG TX lane 3 cfg msw	SerDes TX lane config word, msw lane 3	NO
50	SerDes CFG TXlane 3 cfg lsw	SerDes TX lane config word, lsw, lane 3	NO

10.1.2.5.8 UART Boot Parameter Table

Table 10-24. UART Boot Parameter Table

BYTE OFFSET	NAME	DESCRIPTION	CONFIGURED THROUGH BOOT CONFIGURATION PINS
22	Reserved	None	NA

Copyright © 2012–2017, Texas Instruments Incorporated

Table 10-24. UART Boot Parameter Table (continued)

BYTE OFFSET	NAME	DESCRIPTION	CONFIGURED THROUGH BOOT CONFIGURATION PINS
24	Data Format	Bits 00 Data Format • 0 = Data Format is BLOB • 1 = Data Format is Boot Table Bits 15-01 Reserved	NO
26	Protocol	Bits 00 Protocol • 0 = Xmodem Protocol • 1 = Reserved Bits 15-01 Reserved	NO
28	Initial NACK Count	Number of NACK pings to be sent before giving up	NO
30	Max Err Count	Maximum number of consecutive receive errors acceptable.	NO
32	NACK Time-out	Time (ms) waiting for NACK/ACK.	NO
34	Character Time-out	Time Period between characters	NO
36	nDatabits	Number of bits supported for data. Only 8 bits is supported.	NO
38	Parity	Bits 01-00 Parity • 00 = No Parity • 01 = Odd parity • 10 = Even Parity Bits 15-02 Reserved	NO
40	nStopBitsx2	Number of stop bits times two. Valid values are 2 (stop bits = 1), 3 (Stop Bits = 1.5), 4 (Stop Bits = 2)	NO
42	Over sample factor	The over sample factor. Only 13 and 16 are valid.	NO
44	Flow Control	Bits 00 Flow Control • 0 = No Flow Control • 1 = RTS_CTS flow control Bits 15-01 Reserved	NO
46	Data Rate MSW	Baud Rate, MSW	NO
48	Data Rate LSW	Baud Rate, LSW	NO

10.1.2.5.9 NAND Boot Parameter Table

Table 10-25. NAND Boot Parameter Table

BYTE OFFSET	NAME	DESCRIPTION	CONFIGURED THROUGH BOOT CONFIGURATION PINS
22	Options	Bits 00 Geometry • 0 = Geometry is taken from this table • 1 = Geometry is queried from NAND device. Bits 01 Clear NAND • 0 = NAND Device is a non clear NAND and requires ECC • 1 = NAND is a clear NAND and doesn.t need ECC. Bits 15-02 Reserved	NO
24	numColumnAddrBytes	Number of bytes used to specify column address	NO
26	numRowAddrBytes	Number of bytes used to specify row address.	NO
28	numofDataBytesperPage_msw	Number of data bytes in each page, MSW	NO
30	numofDataBytesperPage_lsw	Number of data bytes in each page, LSW	NO
32	numPagesperBlock	Number of Pages per Block	NO
34	busWidth	EMIF bus width. Only 8 or 16 bits is supported.	NO
36	numSpareBytesperPage	Number of spare bytes allocated per page.	NO
38	csel	Chip Select number (valid chip selects are 2-5)	YES (If ARM is the boot master only chip select 2 is supported)

Copyright © 2012–2017, Texas Instruments Incorporated

Table 10-25. NAND Boot Parameter Table (continued)

BYTE OFFSET	NAME	DESCRIPTION	CONFIGURED THROUGH BOOT CONFIGURATION PINS
40	First Block	First block for RBL to try to read.	YES

10.1.2.5.10 DDR3 Configuration Table

The RBL also provides an option to configure the DDR table before loading the image into the external memory. More information on how to configure the DDR3, see the *KeyStone Architecture DSP Bootloader User's Guide*. The configuration table for DDR3 is shown in Table 10-26

Table 10-26. DDR3 Boot Parameter

BYTE OFFSET	NAME	DESCRIPTION
0	Enable bitmap MSW	Bits 31:0 of the PLL/EMIF enable bitmap. Bit 0 corresponds to the PLL config, Bit 1 to the SDRAM configuration register. There are 24 valid bits in this field (with the MSB corresponding to Rw/exc thresh).
4	Enable bitmap SLSW	Bits 31:0 of the chip level register enable bit map. Bit 0 corresponds to chip level configuration register 0.
8	Enable bitmap LSW	Bits 60:32 of the chip level register enable bit map. Bit 0 corresponds to chip level configuration register 32.
12	PLL Predivier	PLL Predivision (1 = divide by 1, 2 = divide by 2, and so on)
16	PLL Multiplier	PLL Multiplication
20	PLL Post Divider	PLL Postdivision
24	sdRamConfig	SDRAM Configuration Register
28	Refresh ctl	SDRAM Refresh Control Register
32	Timing 1	SDRAM Timing 1 Register
36	Timing 2	SDRAM Timing 2 Register
40	Timing 3	SDRAM Timing 3 Register
44	Timing4	SDRAM Timing 4 Register
48	Pwr management	Power Management Control Register
52	Vbus M cfg	VBUS M Configuration
56	Vbus M cfg val 1	VBUS M Configuration Value 1
60	Vbus M cfg val 2	VBUSM Configuration Value 2
64	IO DFT Test	I/O DFT test logic control
68	Perf ctl sel	Performance Counter Master Region Select Register
72	Perf cnt Mst Reg	Performance Count Master Region Select
76	Zq config	SDRAM Output Impedance Calibration Configuration Register
80	Pri Class Svc Map	Priority class Service Map
84	Mst Id class 1	Master ID class service map 1
88	Mst Id class 2	Master ID class service map 2
92	ECC ctrl	ECC Control Register
96	ECC addr rng 1	ECC Address Range 1 Register
100	ECC addr rng 2	ECC Address Range 2 Register
104	Rw/exc thresh	Read Write Execution Threshold Register
108	PHY PIR	PHY PIR register (SLSW mask bit 0)
112	PHY PGCR0	PHY PGCR0 register (SLSW mask bit 1)
116	PHY PGCR1	PHY PGCR1 register (SLSW mask bit 2)
120	PHY PGCR2	PHY PGCR2 register (SLSW mask bit 3)
124	PHY PGSR0	PHY PGSR0 register (SLSW mask bit 4)
128	PHY PGSR1	PHY PGSR1 register (SLSW mask bit 5)
132	PHY PTR0	PHY PTR 0 register (SLSW mask bit 6)
136	PHY PTR1	PHY PTR 1 register (SLSW mask bit 7)

Copyright © 2012–2017, Texas Instruments Incorporated

Table 10-26. DDR3 Boot Parameter (continued)

BYTE OFFSET	NAME	DESCRIPTION
140	PHY PTR2	PHY PTR 2 register (SLSW mask bit 8)
144	PHY PTR3	PHY PTR 3 register (SLSW mask bit 9)
148	PHY PTR4	PHY PTR 4 register (SLSW mask bit 10)
152	PHY DCR	PHY DCR register (SLSW mask bit 11)
156	PHY DTPR0	PHY DTPR 0 register (SLSW mask bit 12)
160	PHY DTPR1	PHY DTPR 1 register (SLSW mask bit 13)
164	PHY DTPR2	PHY DTPR 2 register (SLSW mask bit 14)
168	PHY MR0	PHY MR 0 register (SLSW mask bit 15)
172	PHY MR1	PHY MR 1 register (SLSW mask bit 16)
176	PHY MR2	PHY MR 2 register (SLSW mask bit 17)
180	PHY DTCR	PHY DTCR register (SLSW mask bit 18)
184	PHY DX0GCR	PHY DX 0 GCR register (SLSW mask bit 19)
188	PHY DX1GCR	PHY DX 1 GCR register (SLSW mask bit 20)
192	PHY DX2GCR	PHY DX 2 GCR register (SLSW mask bit 21)
196	PHY DX3GCR	PHY DX 3 GCR register (SLSW mask bit 22)
200	PHY DX4CGR	PHY DX 4 GCR register (SLSW mask bit 23)
204	PHY DX5GCR	PHY DX 5 GCR register (SLSW mask bit 24)
208	PHY DX6GCR	PHY DX 6 GCR register (SLSW mask bit 25)
212	PHY DX7GCR	PHY DX 7 GCR register (SLSW mask bit 26)
216	PHY DX8GCR	PHY DX 8 GCR register (SLSW mask bit 27)

10.1.2.6 Second-Level Bootloaders

Any of the boot modes can be used to download a second-level bootloader. A second-level bootloader allows for:

- Any level of customization to current boot methods
- Definition of a completely customized boot

10.1.3 SoC Security

The TI SoC contains security architecture that allows the C66x CorePacs and ARM CorePac to perform secure accesses within the device. For more information, contact a TI sales office for additional information available with the purchase of a secure device.

10.1.4 System PLL Settings

The PLL default settings are determined by the BOOTMODE[7:5] bits. Table 10-27 shows the settings for various input clock frequencies. This will set the PLL to the maximum clock setting for the device.

$$CLK = CLKIN \times ((PLLM+1) \div ((CLKOD+1) \times (PLLD+1))) \quad (1)$$

Where OUTPUT_DIVIDE is the value of the field of SECCTL[22:19]

The configuration for the PASS PLL is also shown. The PASS PLL is configured with these values only if the Ethernet boot mode is selected with the input clock set to match the main PLL clock (not the SGMII SerDes clock). See Table 10-11 for details on configuring Ethernet boot mode. The output from the PASS PLL goes through an on-chip divider to reduce the frequency before reaching the NETCP. The PASS PLL generates 1050 MHz, and after the chip divider (/3), applies 350 MHz to the NETCP.

The Main PLL is controlled using a PLL controller and a chip-level MMR. The ARM CorePac PLL, DDR3A PLL, DDR3BPLL, and PASS PLL are controlled by chip level MMRs. For details on how to set up the PLL see Section 11.5. For details on the operation of the PLL controller module, see the *KeyStone Architecture Phase Locked Loop (PLL) Controller User's Guide*.

Copyright © 2012–2017, Texas Instruments Incorporated

Table 10-27. System PLL Configuration

BOOTMODE [7:5]	INPUT CLOCK FREQ (MHz)(1)	800-MHz DEVICE			1000-MHz DEVICE			1200-MHz DEVICE			PA = 350 MHz(2)		
		PLLD	PLLM	DSP *f*	PLLD	PLLM	DSP *f*	PLLD	PLLM	DSP *f*	PLLD	PLLM	DSP *f*(3)
0b000	50.00	0	31	800	0	39	1000	0	47	1200	0	41	1050
0b001	66.67	0	23	800.04	0	29	1000.05	0	35	1200.06	1	62	1050.053
0b010	80.00	0	19	800	0	24	1000	0	29	1200	3	104	1050
0b011	100.00	0	15	800	0	19	1000	0	23	1200	0	20	1050
0b100	156.25	3	40	800.78	4	63	1000	2	45	1197.92	24	335	1050
0b101	250.00	4	31	800	0	7	1000	4	47	1200	4	41	1050
0b110	312.50	7	40	800.78	4	31	1000	2	22	1197.92	24	167	1050
0b111	122.88	0	12	798.72	3	64	999.989	0	19	1228.80	11	204	1049.6

(1) The CLKOD reset value = 1, and the value of 1 is used for all calculations in this table (based on Equation 1).

(2) The PASS PLL generates 1050 MHz and is internally divided by 3 to feed 350 MHz to the packet accelerator.
(3) *f* represents frequency in MHz.

10.1.4.1 ARM CorePac System PLL Settings

The PLL default settings are determined by the BOOTMODE[11:9] bits. Table 10-28 shows settings for various input clock frequencies. This will set the PLL to the maximum clock setting for the device.

$$CLK = CLKIN \times ((PLLM+1) \div ((CLKOD+1) \times (PLLD+1))) \quad (2)$$

The ARM CorePac PLL is controlled using a PLL controller and a chip-level MMR. For details on how to set up the PLL see Section 11.5. For details on the operation of the PLL controller module, see the *KeyStone Architecture Phase Locked Loop (PLL) Controller User's Guide*.

Table 10-28. ARM PLL Configuration

BOOTMODE [11:9]	INPUT CLOCK FREQ (MHz)(1)	800-MHz DEVICE			1000-MHz DEVICE			1200-MHz DEVICE			1400-MHz DEVICE		
		PLLD	PLLM	ARM *f*	PLLD	PLLM	ARM *f*	PLLD	PLLM	ARM *f*	PLLD	PLLM	ARM *f*(2)
0b000	50.00	0	31	800	0	39	1000	0	47	1200	0	55	1400
0b001	66.67	0	23	800.04	0	29	1000.05	0	35	1200.06	0	41	1400.07
0b010	80.00	0	19	800	0	24	1000	0	29	1200	0	34	1400
0b011	100.00	0	15	800	0	19	1000	0	23	1200	0	27	1400
0b100	156.25	3	40	800.78	4	63	1000	2	45	1197.92	0	17	1406.25
0b101	250.00	4	31	800	0	7	1000	4	47	1200	4	55	1400
0b110	312.50	7	40	800.78	4	31	1000	2	22	1197.92	0	8	1406.25
0b111	122.88	0	12	798.72	3	64	999.40	0	19	1200.80	0	22	1413.12

(1) The CLKOD reset value = 1, and the value of 1 is used for all calculations in this table (based on Equation 2).

(2) *f* represents frequency in MHz.

10.2 Device Configuration

Certain device configurations like boot mode and endianess are selected at device power-on reset. The status of the peripherals (enabled/disabled) is determined after device power-on reset. By default, the peripherals on the device are disabled and need to be enabled by software before being used.

Copyright © 2012–2017, Texas Instruments Incorporated

10.2.1 Device Configuration at Device Reset

The logic level present on each device configuration pin is latched at power-on reset to determine the device configuration. The logic level on the device configuration pins can be set by using external pullup/pulldown resistors or by using some control device (for example, FPGA/CPLD) to intelligently drive these pins. When using a control device, care should be taken to ensure there is no contention on the lines when the device is out of reset. The device configuration pins are sampled during power-on reset and are driven after the reset is removed. To avoid contention, the control device must stop driving the device configuration pins of the SoC. Table 10-29 describes the device configuration pins.

NOTE

If a configuration pin must be routed out from the device and it is not driven (Hi-Z state), the internal pullup/pulldown (IPU/IPD) resistor should not be relied upon. TI recommends the use of an external pullup/pulldown resistor. For more detailed information on pullup/pulldown resistors and situations in which external pullup/pulldown resistors are required, see Section 4.4.

Table 10-29. Device Configuration Pins

CONFIGURATION PIN	PIN NO.	IPD/IPU (1)	DESCRIPTION
LENDIAN (1)(2)	F29	IPU	Device endian mode (LENDIAN) • 0 = Device operates in big endian mode • 1 = Device operates in little endian mode
BOOTMODE[15:0] (1)(2)	B30, D29, A35, B29, E29, D30, C30, A30, G30, F31, E30, F30, A31, F24, E24, D24	IPD	Method of boot • See Section 10.1.2 for more details. • See the *KeyStone Architecture DSP Bootloader User's Guide* for detailed information on boot configuration.
AVSIFSEL[1:0] (1)(2)	M1, M2	IPD	AVS interface selection • 00 = AVS 4-pin 6-bit Dual-Phase VCNTL[5:2] (Default) • 01 = AVS 4-pin 4-bit Single-Phase VCNTL[5:2] • 10 = AVS 6-pin 6-bit Single-Phase VCNTL[5:0] • 11 = I^2C
MAINPLLODSEL (1)(2)	E32	IPD	Main PLL Output divider select • 0 = Main PLL output divider needs to be set to 2 by BOOTROM • 1 = Reserved
ARMAVSSHARED (1)	G24	IPD	ARM AVS Shared with the rest of SOC AVS • 0 = Reserved • 1 = ARM Core voltage and rest of SoC core voltage shared
BOOTMODE_RSVD (1)	B31	IPD	Boot mode reserved. Pulldown resistor required on pin.
DDR3A_MAP_EN (1)	A36	IPD	Control ARM remapping of DDR3A address space in the lower 4GB (32b space) Mode select • 0 = DDR3A memory is accessible from ARM at 0x08 0000 0000-0x09 FFFF FFFF. • 1 = DDR3A memory is accessible from ARM at 0x00 8000 0000-0x00 FFFF FFFF with 0x00 8000 0000-0x00 FFFF FFFF aliased at 0x08 0000 0000-0x08 7FFF FFFF.

(1) Internal 100-µA pulldown or pullup is provided for this terminal. In most systems, a 1-kΩ resistor can be used to oppose the IPD/IPU. For more detailed information on pulldown/pullup resistors and situations in which external pulldown/pullup resistors are required, see Section 4.4.
(2) These signal names are the secondary functions of these pins.

10.2.2 Peripheral Selection After Device Reset

Several of the peripherals on the 66AK2Hxx are controlled by the Power Sleep Controller (PSC). By default, the PCIe, SRIO, and HyperLink are held in reset and clock-gated. The memories in these modules are also in a low-leakage sleep mode. Software is required to turn these memories on. Then, the software enables the modules (turns on clocks and deasserts reset) before these modules can be used.

Copyright © 2012–2017, Texas Instruments Incorporated

If one of the above modules is used in the selected ROM boot mode, the ROM code automatically enables the module.

All other modules come up enabled by default and there is no special software sequence to enable. For more detailed information on the PSC usage, see the *KeyStone Architecture Power Sleep Controller (PSC) User's Guide*.

10.2.3 Device State Control Registers

The 66AK2Hxx device has a set of registers that are used to control the status of its peripherals. These registers are shown in Table 10-30.

Table 10-30. Device State Control Registers

ADDRESS START	ADDRESS END	SIZE	ACRONYM	DESCRIPTION
0x02620000	0x02620007	8B	Reserved	
0x02620008	0x02620017	16B	Reserved	
0x02620018	0x0262001B	4B	JTAGID	See Section 10.2.3.3
0x0262001C	0x0262001F	4B	Reserved	
0x02620020	0x02620023	4B	DEVSTAT	See Section 10.2.3.1
0x02620024	0x02620037	20B	Reserved	
0x02620038	0x0262003B	4B	KICK0	See Section 10.2.3.4
0x0262003C	0x0262003F	4B	KICK1	
0x02620040	0x02620043	4B	DSP_BOOT_ADDR0	The boot address for C66x CorePac0. See Section 10.2.3.5
0x02620044	0x02620047	4B	DSP_BOOT_ADDR1	The boot address for C66x CorePac1. See Section 10.2.3.5
0x02620048	0x0262004B	4B	DSP_BOOT_ADDR2	The boot address for C66x CorePac2. See Section 10.2.3.5
0x0262004C	0x0262004F	4B	DSP_BOOT_ADDR3	The boot address for C66x CorePac3. See Section 10.2.3.5
0x02620050	0x02620053	4B	DSP_BOOT_ADDR4	The boot address for C66x CorePac4 (66AK2H14/12 only). See Section 10.2.3.5
0x02620054	0x02620057	4B	DSP_BOOT_ADDR5	The boot address for C66x CorePac5 (66AK2H14/12 only). See Section 10.2.3.5
0x02620058	0x0262005B	4B	DSP_BOOT_ADDR6	The boot address for C66x CorePac6 (66AK2H14/12 only). See Section 10.2.3.5
0x0262005C	0x0262005F	4B	DSP_BOOT_ADDR7	The boot address for C66x CorePac7 (66AK2H14/12 only). See Section 10.2.3.5
0x02620060	0x026200DF	128B	Reserved	
0x026200E0	0x0262010F	48B	Reserved	
0x02620110	0x02620117	8B	MACID	See Section 11.17
0x02620118	0x0262012F	24B	Reserved	
0x02620130	0x02620133	4B	LRSTNMIPINSTAT_CLR	See Section 10.2.3.7
0x02620134	0x02620137	4B	RESET_STAT_CLR	See Section 10.2.3.9
0x02620138	0x0262013B	4B	Reserved	
0x0262013C	0x0262013F	4B	BOOTCOMPLETE	See Section 10.2.3.10
0x02620140	0x02620143	4B	Reserved	
0x02620144	0x02620147	4B	RESET_STAT	See Section 10.2.3.8
0x02620148	0x0262014B	4B	LRSTNMIPINSTAT	See Section 10.2.3.6
0x0262014C	0x0262014F	4B	DEVCFG	See Section 10.2.3.2
0x02620150	0x02620153	4B	PWRSTATECTL	See Section 10.2.3.11

Copyright © 2012–2017, Texas Instruments Incorporated

Table 10-30. Device State Control Registers (continued)

ADDRESS START	ADDRESS END	SIZE	ACRONYM	DESCRIPTION
0x02620154	0x02620157	4B	Reserved	
0x02620158	0x0262015B	4B	Reserved	
0x0262015C	0x0262015F	4B	Reserved	
0x02620160	0x02620160	4B	Reserved	
0x02620164	0x02620167	4B	Reserved	
0x02620168	0x0262016B	4B	Reserved	
0x0262016C	0x0262017F	20B	Reserved	
0x02620180	0x02620183	4B	SmartReflex Class0	See Section 11.2.4
0x02620184	0x0262018F	12B	Reserved	
0x02620190	0x02620193	4B	Reserved	
0x02620194	0x02620197	4B	Reserved	
0x02620198	0x0262019B	4B	Reserved	
0x0262019C	0x0262019F	4B	Reserved	
0x026201A0	0x026201A3	4B	Reserved	
0x026201A4	0x026201A7	4B	Reserved	
0x026201A8	0x026201AB	4B	Reserved	
0x026201AC	0x026201AF	4B	Reserved	
0x026201B0	0x026201B3	4B	Reserved	
0x026201B4	0x026201B7	4B	Reserved	
0x026201B8	0x026201BB	4B	Reserved	
0x026201BC	0x026201BF	4B	Reserved	
0x026201C0	0x026201C3	4B	Reserved	
0x026201C4	0x026201C7	4B	Reserved	
0x026201C8	0x026201CB	4B	Reserved	
0x026201CC	0x026201CF	4B	Reserved	
0x026201D0	0x026201FF	48B	Reserved	
0x02620200	0x02620203	4B	NMIGR0	See Section 10.2.3.12
0x02620204	0x02620207	4B	NMIGR1	
0x02620208	0x0262020B	4B	NMIGR2	
0x0262020C	0x0262020F	4B	NMIGR3	
0x02620210	0x02620213	4B	NMIGR4 (66AK2H14/12 only)	
0x02620214	0x02620217	4B	NMIGR5 (66AK2H14/12 only)	
0x02620218	0x0262021B	4B	NMIGR6 (66AK2H14/12 only)	
0x0262021C	0x0262021F	4B	NMIGR7 (66AK2H14/12 only)	
0x02620220	0x0262023F	32B	Reserved	
0x02620240	0x02620243	4B	IPCGR0	See Section 10.2.3.13
0x02620244	0x02620247	4B	IPCGR1	
0x02620248	0x0262024B	4B	IPCGR2	
0x0262024C	0x0262024F	4B	IPCGR3	
0x02620250	0x02620253	4B	IPCGR4	
0x02620254	0x02620257	4B	IPCGR5	
0x02620258	0x0262025B	4B	IPCGR6	
0x0262025C	0x0262025F	4B	IPCGR7	
0x02620260	0x02620263	4B	IPCGR8	
0x02620264	0x02620267	4B	IPCGR9	
0x02620268	0x0262026B	4B	IPCGR10	
0x0262026C	0x0262026F	4B	IPCGR11	

Copyright © 2012–2017, Texas Instruments Incorporated

Table 10-30. Device State Control Registers (continued)

ADDRESS START	ADDRESS END	SIZE	ACRONYM	DESCRIPTION
0x02620270	0x0262027B	12B	Reserved	
0x0262027C	0x0262027F	4B	IPCGRH	See Section 10.2.3.15
0x02620280	0x02620283	4B	IPCAR0	See Section 10.2.3.14
0x02620284	0x02620287	4B	IPCAR1	
0x02620288	0x0262028B	4B	IPCAR2	
0x0262028C	0x0262028F	4B	IPCAR3	
0x02620290	0x02620293	4B	IPCAR4	
0x02620294	0x02620297	4B	IPCAR5	
0x02620298	0x0262029B	4B	IPCAR6	
0x0262029C	0x0262029F	4B	IPCAR7	
0x026202A0	0x026202A3	4B	IPCAR8	
0x026202A4	0x026202A7	4B	IPCAR9	
0x026202A8	0x026202AB	4B	IPCAR10	
0x026202AC	0x026202AF	4B	IPCAR11	
0x026202B0	0x026202BB	12B	Reserved	
0x026202BC	0x026202BF	4B	IPCARH	See Section 10.2.3.16
0x026202C0	0x026202FF	64B	Reserved	
0x02620300	0x02620303	4B	TINPSEL	See Section 10.2.3.17
0x02620304	0x02620307	4B	TOUTPSEL	See Section 10.2.3.18
0x02620308	0x0262030B	4B	RSTMUX0	See Section 10.2.3.19
0x0262030C	0x0262030F	4B	RSTMUX1	
0x02620310	0x02620313	4B	RSTMUX2	
0x02620314	0x02620317	4B	RSTMUX3	
0x02620318	0x0262031B	4B	RSTMUX4	
0x0262031C	0x0262031F	4B	RSTMUX5	
0x02620320	0x02620323	4B	RSTMUX6	
0x02620324	0x02620327	4B	RSTMUX7	
0x02620328	0x0262032B	4B	RSTMUX8	
0x0262032C	0x0262032F	4B	RSTMUX9	
0x02620330	0x02620333	4B	RSTMUX10	
0x02620334	0x02620337	4B	RSTMUX11	
0x02620338	0x0262034F	4B	Reserved	
0x02620350	0x02620353	4B	MAINPLLCTL0	See Section 11.5
0x02620354	0x02620357	4B	MAINPLLCTL1	
0x02620358	0x0262035B	4B	PASSPLLCTL0	See Section 11.7
0x0262035C	0x0262035F	4B	PASSPLLCTL1	
0x02620360	0x02620363	4B	DDR3APLLCTL0	See Section 11.6
0x02620364	0x02620367	4B	DDR3APLLCTL1	
0x02620368	0x0262036B	4B	DDR3BPLLCTL0	See Section 11.6
0x0262036C	0x0262036F	4B	DDR3BPLLCTL1	
0x02620370	0x02620373	4B	ARMPLLCTL0	See Section 10.1.4.1
0x02620374	0x02620377	4B	ARMPLLCTL1	
0x02620378	0x0262039B	132B	Reserved	
0x0262039C	0x0262039F	4B	Reserved	
0x02620400	0x02620403	4B	ARMENDIAN_CFG0_0	See Section 10.2.3.21
0x02620404	0x02620407	4B	ARMENDIAN_CFG0_1	
0x02620408	0x0262040B	4B	ARMENDIAN_CFG0_2	

Copyright © 2012–2017, Texas Instruments Incorporated

Table 10-30. Device State Control Registers (continued)

ADDRESS START	ADDRESS END	SIZE	ACRONYM	DESCRIPTION
0x0262040C	0x026205FF	62B	Reserved	
0x02620600	0x026206FF	256B	Reserved	
0x02620700	0x02620703	4B	CHIP_MISC_CTL0	See Section 10.2.3.24
0x02620704	0x0262070F	12B	Reserved	
0x02620710	0x02620713	4B	SYSENDSTAT	See Section 10.2.3.26
0x02620714	0x02620717	4B	Reserved	
0x02620718	0x0262071B	4B	Reserved	
0x0262071C	0x0262071F	4B	Reserved	
0x02620720	0x0262072F	16B	Reserved	
0x02620730	0x02620733	4B	SYNECLK_PINCTL	See Section 10.2.3.27
0x02620734	0x02620737	4B	Reserved	
0x02620738	0x0262074F	24B	USB_PHY_CTL	See Section 10.2.3.28
0x02620750	0x026207FF	176B	Reserved	
0x02620800	0x02620C7B	1148B	Reserved	
0x02620C7C	0x02620C7F	4B	CHIP_MISC_CTL1	See Section 10.2.3.25
0x02620C80	0x02620C97	24B	Reserved	
0x02620C90 (silicon revisions 2.0, 3.0, and 3.1)	0x02620C93 (silicon revisions 2.0, 3.0, and 3.1)	4B	DEVSPEED	See Section 10.2.3.20
0x02620C98 (silicon revision 1.1, 1.0)	0x02620C9B (silicon revision 1.1, 1.0)	4B	DEVSPEED	See Section 10.2.3.20
0x02620C9C	0x02620FFF	868B	Reserved	

10.2.3.1 Device Status (DEVSTAT) Register

The Device Status register depicts device configuration selected upon a power-on reset by the $\overline{\text{POR}}$ or RESETFULL pin. Once set, these bits remain set until a power-on reset. The Device Status register is shown in Figure 10-13 and described in Table 10-31.

Figure 10-13. Device Status Register

31	30	29	28	27	26	25	24	23	22	21	20	19	18	17	16
Reserved						DDR3A_ MAP_EN	Reserved			ARMAVS SHARED	Rsvd	MAINPLL ODSEL	AVSIFSEL		BOOT MODE
R-0000 0000 0000 00						R-x	R-x			R/W-x	R-x	R/W-x	R/W-xx		R/W-x xxxx xxxx xxxx xxx
15	14	13	12	11	10	9	8	7	6	5	4	3	2	1	0
BOOTMODE															LENDIAN
R/W-x xxxx xxxx xxxx xxx															R-x (1)

Legend: R = Read only; RW = Read/Write; -*n* = value after reset

(1) x indicates the bootstrap value latched via the external pin

Table 10-31. Device Status Register Field Descriptions

Bit	Field	Description
31-26	Reserved	Reserved. Read only, writes have no effect.
25	DDR3A_MAP_EN	DDR3A mapping enable • 0 = DDR3A memory is accessible from ARM at 0x8:0000_0000-0x9:FFFF_FFFF. • 1 = DDR3A memory is accessible in 32b space from ARM, that is, at 0x0:8000_0000-0x0:FFFF_FFFF. DDR3A is also accessible at 0x8:0000_0000-0x9:FFFF_FFFF, with the space 0x0:8000_0000-0x0:FFFF_FFFF address aliased at 0x8:0000_0000-0x8:7FFF_FFFF.
24-22	Reserved	Reserved

Copyright © 2012–2017, Texas Instruments Incorporated

Table 10-31. Device Status Register Field Descriptions (continued)

Bit	Field	Description
21	ARMAVSSHARED	ARM AVS Shared with the rest of SOC AVS • 0 = Reserved • 1 = ARM Core voltage and rest of SoC core voltage share
20	Reserved	Reserved
19	MAINPLLODSEL	Main PLL Output divider select • 0 = Main PLL output divider needs to be set to 2 by BOOTROM • 1 = Reserved
18-17	AVSIFSEL	AVS interface selection • 00 = AVS 4pin 6bit Dual-Phase VCNTL[5:2] (Default) • 01 = AVS 4pin 4bit Single-Phase VCNTL[5:2] • 10 = AVS 6pin 6bit Single-Phase VCNTL[5:0] • 11 = I^2C
16-1	BOOTMODE	Determines the boot mode configured for the device. For more information on boot mode, see Section 10.1.2 and the *KeyStone Architecture DSP Bootloader User's Guide*.
0	LENDIAN	Device endian mode (LENDIAN) — shows the status of whether the system is operating in big endian mode or little endian mode (default). • 0 = System is operating in big endian mode • 1 = System is operating in little endian mode (default)

10.2.3.2 Device Configuration Register

The Device Configuration Register is one-time writeable through software. The register is reset on all hard resets and is locked after the first write. The Device Configuration Register is shown in Figure 10-14 and described in Table 10-32.

Figure 10-14. Device Configuration Register (DEVCFG)

31	30	29	28	27	26	25	24	23	22	21	20	19	18	17	16	15	14	13	12	11	10	9	8	7	6	5	4	3	2	1	0
Reserved																													PCIESSMODE		SYSCLK OUTEN
R-0																													R/W-00		R/W-1

Legend: R = Read only; RW = Read/Write; -n = value after reset

Table 10-32. Device Configuration Register Field Descriptions

Bit	Field	Description
31-3	Reserved	Reserved. Read only, writes have no effect.
2-1	PCIESSMODE	Device Type Input of PCIeSS • 00 = Endpoint • 01 = Legacy Endpoint • 10 = Rootcomplex • 11 = Reserved
0	SYSCLKOUTEN	SYSCLKOUT enable • 0 = No clock output • 1 = Clock output enabled (default)

10.2.3.3 JTAG ID (JTAGID) Register Description

The JTAG ID register is a read-only register that identifies to the customer the JTAG/Device ID. For the device, the JTAG ID register resides at address location 0x02620018. The JTAG ID register is shown in Figure 10-15 and described in Table 10-33.

Copyright © 2012–2017, Texas Instruments Incorporated

Figure 10-15. JTAG ID (JTAGID) Register

31	30	29	28	27	26	25	24	23	22	21	20	19	18	17	16	15	14	13	12	11	10	9	8	7	6	5	4	3	2	1	0
VARIANT				PART NUMBER																MANUFACTURER											LSB
R-xxxx				R-1011 1001 1000 0001																R-0000 0010 111											R-1

LEGEND: R/W = Read/Write; R = Read only; -*n* = value after reset

Table 10-33. JTAG ID Register Field Descriptions

Bit	Field	Value	Description
31-28	VARIANT	xxxx	Variant value
27-12	PART NUMBER	1011 1001 1000 0001	Part Number for boundary scan
11-1	MANUFACTURER	0000 0010 111	Manufacturer
0	LSB	1	This bit is read as a 1

NOTE

The value of the VARIANT and PART NUMBER fields depends on the silicon revision being used. See the Silicon Errata for details.

10.2.3.4 Kicker Mechanism (KICK0 and KICK1) Register

The Bootcfg module contains a kicker mechanism to prevent spurious writes from changing any of the Bootcfg MMR (memory mapped registers) values. When the kicker is locked (which it is initially after power on reset), none of the Bootcfg MMRs are writable (they are only readable). This mechanism requires an MMR write to each of the KICK0 and KICK1 registers with exact data values before the kicker lock mechanism is unlocked. See Table 10-30 for the address location. Once released, all the Bootcfg MMRs having write permissions are writable (the read only MMRs are still read only). The KICK0 data is 0x83e70b13. The KICK1 data is 0x95a4f1e0. Writing any other data value to either of these kick MMRs locks the kicker mechanism and blocks writes to Bootcfg MMRs. To ensure protection to all Bootcfg MMRs, software must always relock the kicker mechanism after completing the MMR writes.

10.2.3.5 DSP Boot Address Register (DSP_BOOT_ADDRn)

The DSP_BOOT_ADDRn register stores the initial boot fetch address of CorePac_n (n = core number). The fetch address is the public ROM base address (for any boot mode) by default. DSP_BOOT_ADDRn register access should be permitted to any master or emulator when the device is non-secure. CorePac boots from that address when a reset is performed. The DSP_BOOT_ADDRn register is shown in Table 10-34 and described in Table 10-35.

Table 10-34. DSP BOOT Address Register (DSP_BOOT_ADDRn)

31 10	9 0
DSP_BOOT_ADDR	Reserved
RW-00100000101100000000000	R-0

Legend: R = Read only; -*n* = value after reset

Table 10-35. DSP BOOT Address Register (DSP_BOOT_ADDRn) Field Descriptions

Bit	Field	Description
31-10	DSP_BOOT_ADDR	Boot address of CorePac. CorePac boots from that address when a reset is performed. The reset value is 22 MSBs of ROM base address = 0x20B00000.
9-0	Reserved	Reserved

10.2.3.6 LRESETNMI PIN Status (LRSTNMIPINSTAT) Register

The LRSTNMIPINSTAT register latches the status of $\overline{\text{LRESET}}$ and $\overline{\text{NMI}}$. The LRESETNMI PIN Status register is shown in Figure 10-16 and described in Table 10-36.

Copyright © 2012–2017, Texas Instruments Incorporated

Figure 10-16. LRESETNMI PIN Status Register (LRSTNMIPINSTAT)

31	30	29	28	27	26	25	24	23	22	21	20	19	18	17	16	15	14	13	12	11	10	9	8	7	6	5	4	3	2	1	0
Reserved																NMI7	NMI6	NMI5	NMI4	NMI3	NMI2	NMI1	NMI0	LR7	LR6	LR5	LR4	LR3	LR2	LR1	LR0
R-0																R-0	R-0	R-0	R-0	R-0	R-0	R-0	R-0	R-0	R-0	R-0	R-0	R-0	R-0	R-0	R-0

Legend: R = Read only; -*n* = value after reset

Table 10-36. LRESETNMI PIN Status Register Field Descriptions

Bit	Field	Description
31-16	Reserved	Reserved
15	NMI7	C66x CorePac7 in NMI (66AK2H14/12 only)
14	NMI6	C66x CorePac6 in NMI (66AK2H14/12 only)
13	NMI5	C66x CorePac5 in NMI (66AK2H14/12 only)
12	NMI4	C66x CorePac4 in NMI (66AK2H14/12 only)
11	NMI3	C66x CorePac3 in NMI
10	NMI2	C66x CorePac2 in NMI
9	NMI1	C66x CorePac1 in NMI
8	NMI0	C66x CorePac0 in NMI
7	LR7	C66x CorePac7 in Local Reset (66AK2H14/12 only)
6	LR6	C66x CorePac6 in Local Reset (66AK2H14/12 only)
5	LR5	C66x CorePac5 in Local Reset (66AK2H14/12 only)
4	LR4	C66x CorePac4 in Local Reset (66AK2H14/12 only)
3	LR3	C66x CorePac3 in Local Reset
2	LR2	C66x CorePac2 in Local Reset
1	LR1	C66x CorePac1 in Local Reset
0	LR0	C66x CorePac0 in Local Reset

10.2.3.7 LRESETNMI PIN Status Clear (LRSTNMIPINSTAT_CLR) Register

The LRSTNMIPINSTAT_CLR register clears the status of $\overline{\text{LRESET}}$ and $\overline{\text{NMI}}$. The LRESETNMI PIN Status Clear register is shown in Figure 10-17 and described in Table 10-37.

Figure 10-17. LRESETNMI PIN Status Clear Register (LRSTNMIPINSTAT_CLR)

31	30	29	28	27	26	25	24	23	22	21	20	19	18	17	16	15	14	13	12	11	10	9	8	7	6	5	4	3	2	1	0
Reserved																NMI7	NMI6	NMI5	NMI4	NMI3	NMI2	NMI1	NMI0	LR7	LR6	LR5	LR4	LR3	LR2	LR1	LR0
R-0																WC-0	WC-0	WC-0	WC-0	WC-0	WC-0	WC-0	WC-0	WC-0	WC-0	WC-0	WC-0	WC-0	WC-0	WC-0	WC-0

Legend: R = Read only; -*n* = value after reset; WC = Write 1 to Clear

Table 10-37. LRESETNMI PIN Status Clear Register Field Descriptions

Bit	Field	Description
31-16	Reserved	Reserved
15	NMI7	C66x CorePac7 in NMI Clear (66AK2H14/12 only)
14	NM6	C66x CorePac6 in NMI Clear (66AK2H14/12 only)
13	NMI5	C66x CorePac5 in NMI Clear (66AK2H14/12 only)
12	NMI4	C66x CorePac4 in NMI Clear (66AK2H14/12 only)
11	NMI3	C66x CorePac3 in NMI Clear
10	NMI2	C66x CorePac2 in NMI Clear
9	NMI1	C66x CorePac1 in NMI Clear
8	NMI0	C66x CorePac0 in NMI Clear
7	LR7	C66x CorePac7 in Local Reset Clear (66AK2H14/12 only)
6	LR6	C66x CorePac6 in Local Reset Clear (66AK2H14/12 only)
5	LR5	C66x CorePac5 in Local Reset Clear (66AK2H14/12 only)

Copyright © 2012–2017, Texas Instruments Incorporated

Table 10-37. LRESETNMI PIN Status Clear Register Field Descriptions (continued)

Bit	Field	Description
4	LR4	C66x CorePac4 in Local Reset Clear (66AK2H14/12 only)
3	LR3	C66x CorePac3 in Local Reset Clear
2	LR2	C66x CorePac2 in Local Reset Clear
1	LR1	C66x CorePac1 in Local Reset Clear
0	LR0	C66x CorePac0 in Local Reset Clear

10.2.3.8 Reset Status (RESET_STAT) Register

The Reset Status register (RESET_STAT) captures the status of local reset (LRx) for each of the cores and also the global device reset (GR). Software can use this information to take different device initialization steps.

- **In case of local reset:** The LRx bits are written as 1 and the GR bit is written as 0 only when the C66x CorePac receives a local reset without receiving a global reset.
- **In case of global reset:** The LRx bits are written as 0 and the GR bit is written as 1 only when a global reset is asserted.

The Reset Status register is shown in Figure 10-18 and described in Table 10-38.

Figure 10-18. Reset Status Register (RESET_STAT)

31	30	29	28	27	26	25	24	23	22	21	20	19	18	17	16	15	14	13	12	11	10	9	8	7	6	5	4	3	2	1	0
GR	Reserved																							LR7	LR6	LR5	LR4	LR3	LR2	LR1	LR0
R-1	R-000 0000 0000 0000 0000 0000																							R-0	R-0	R-0	R-0	R-0	R-0	R-0	R-0

Legend: R = Read only; -*n* = value after reset

Table 10-38. Reset Status Register Field Descriptions

Bit	Field	Description
31	GR	Global reset status • 0 = Device has not received a global reset. • 1 = Device received a global reset.
30-8	Reserved	Reserved.
7	LR7	C66x CorePac7 reset status (66AK2H14/12 only) • 0 = C66x CorePac7 has not received a local reset. • 1 = C66x CorePac7 received a local reset.
6	LR6	C66x CorePac6 reset status (66AK2H14/12 only) • 0 = C66x CorePac6 has not received a local reset. • 1 = C66x CorePac6 received a local reset.
5	LR5	C66x CorePac5 reset status (66AK2H14/12 only) • 0 = C66x CorePac5 has not received a local reset. • 1 = C66x CorePac5 received a local reset.
4	LR4	C66x CorePac4 reset status (66AK2H14/12 only) • 0 = C66x CorePac4 has not received a local reset. • 1 = C66x CorePac4received a local reset.
3	LR3	C66x CorePac3 reset status • 0 = C66x CorePac3 has not received a local reset. • 1 = C66x CorePac3 received a local reset.
2	LR2	C66x CorePac2 reset status • 0 = C66x CorePac2 has not received a local reset. • 1 = C66x CorePac2 received a local reset.
1	LR1	C66x CorePac1 reset status • 0 = C66x CorePac1 has not received a local reset. • 1 = C66x CorePac1 received a local reset.

Copyright © 2012–2017, Texas Instruments Incorporated

Table 10-38. Reset Status Register Field Descriptions (continued)

Bit	Field	Description
0	LR0	C66x CorePac0 reset status • 0 = C66x CorePac0 has not received a local reset. • 1 = C66x CorePac0 received a local reset.

10.2.3.9 Reset Status Clear (RESET_STAT_CLR) Register

The RESET_STAT bits can be cleared by writing 1 to the corresponding bit in the RESET_STAT_CLR register. The Reset Status Clear register is shown in Figure 10-19 and described in Table 10-39.

Figure 10-19. Reset Status Clear Register (RESET_STAT_CLR)

31	30	29	28	27	26	25	24	23	22	21	20	19	18	17	16	15	14	13	12	11	10	9	8	7	6	5	4	3	2	1	0
GR	Reserved																							LR7	LR6	LR5	LR4	LR3	LR2	LR1	LR0
RW-0	R-000 0000 0000 0000 0000 0000																							RW-0	RW-0	RW-0	RW-0	RW-0	RW-0	RW-0	RW-0

Legend: R = Read only; RW = Read/Write; -*n* = value after reset

Table 10-39. Reset Status Clear Register Field Descriptions

Bit	Field	Description
31	GR	Global reset clear bit • 0 = Writing a 0 has no effect. • 1 = Writing a 1 to the GR bit clears the corresponding bit in the RESET_STAT register.
30-8	Reserved	Reserved.
7	LR7	C66x CorePac7 reset clear bit (66AK2H14/12 only) • 0 = Writing a 0 has no effect. • 1 = Writing a 1 to the LR7 bit clears the corresponding bit in the RESET_STAT register.
6	LR6	C66x CorePac6 reset clear bit (66AK2H14/12 only) • 0 = Writing a 0 has no effect. • 1 = Writing a 1 to the LR6 bit clears the corresponding bit in the RESET_STAT register.
5	LR5	C66x CorePac5 reset clear bit (66AK2H14/12 only) • 0 = Writing a 0 has no effect. • 1 = Writing a 1 to the LR5 bit clears the corresponding bit in the RESET_STAT register.
4	LR4	C66x CorePac4 reset clear bit (66AK2H14/12 only) • 0 = Writing a 0 has no effect. • 1 = Writing a 1 to the LR4 bit clears the corresponding bit in the RESET_STAT register.
3	LR3	C66x CorePac3 reset clear bit • 0 = Writing a 0 has no effect. • 1 = Writing a 1 to the LR3 bit clears the corresponding bit in the RESET_STAT register.
2	LR2	C66x CorePac2 reset clear bit • 0 = Writing a 0 has no effect. • 1 = Writing a 1 to the LR2 bit clears the corresponding bit in the RESET_STAT register.
1	LR1	C66x CorePac1 reset clear bit • 0 = Writing a 0 has no effect. • 1 = Writing a 1 to the LR1 bit clears the corresponding bit in the RESET_STAT register.
0	LR0	C66x CorePac0 reset clear bit • 0 = Writing a 0 has no effect. • 1 = Writing a 1 to the LR0 bit clears the corresponding bit in the RESET_STAT register.

10.2.3.10 Boot Complete (BOOTCOMPLETE) Register

The BOOTCOMPLETE register controls the BOOTCOMPLETE pin status to indicate the completion of the ROM booting process. The Boot Complete register is shown in Figure 10-20 and described in Table 10-40.

Copyright © 2012–2017, Texas Instruments Incorporated

Figure 10-20. Boot Complete Register (BOOTCOMPLETE)

31	30	29	28	27	26	25	24	23	22	21	20	19	18	17	16	15	14	13	12	11	10	9	8	7	6	5	4	3	2	1	0
Reserved																				BC11	BC10	BC9	BC8	BC7	BC6	BC5	BC4	BC3	BC	BC1	BC0
R,-0000 0000 0000 0000 0000																				RW-0	RW-0	RW-0	RW-0	RW-0	RW-0	RW-0	RW-0	RW-0	RW-0	RW-0	RW-0

LEGEND: R/W = Read/Write; R = Read only; -*n* = value after reset

Table 10-40. Boot Complete Register Field Descriptions

Bit	Field	Description
31-12	Reserved	Reserved.
11	BC11	ARM CorePac 3 boot status (66AK2H14/12 only) • 0 = ARM CorePac 3 boot NOT complete • 1 = ARM CorePac 3 boot complete
10	BC10	ARM CorePac 2 boot status (66AK2H14/12 only) • 0 = ARM CorePac 2 boot NOT complete • 1 = ARM CorePac 2 boot complete
9	BC9	ARM CorePac 1 boot status • 0 = ARM CorePac 1 boot NOT complete • 1 = ARM CorePac 1 boot complete
8	BC8	ARM CorePac 0 boot status • 0 = ARM CorePac 0 boot NOT complete • 1 = ARM CorePac 0 boot complete
7	BC7	C66x CorePac 7 boot status (66AK2H14/12 only) • 0 = C66x CorePac 7 boot NOT complete • 1 = C66x CorePac 7 boot complete
6	BC6	C66x CorePac 6 boot status (66AK2H14/12 only) • 0 = C66x CorePac 6 boot NOT complete • 1 = C66x CorePac 6 boot complete
5	BC5	C66x CorePac 5 boot status (66AK2H14/12 only) • 0 = C66x CorePac 5 boot NOT complete • 1 = C66x CorePac 5 boot complete
4	BC4	C66x CorePac 4 boot status (66AK2H14/12 only) • 0 = C66x CorePac 4 boot NOT complete • 1 = C66x CorePac 4 boot complete
3	BC3	C66x CorePac 3 boot status • 0 = C66x CorePac 3 boot NOT complete • 1 = C66x CorePac 3 boot complete
2	BC2	C66x CorePac2 boot status • 0 = C66x CorePac 2 boot NOT complete • 1 = C66x CorePac 2 boot complete
1	BC1	C66x CorePac1 boot status • 0 = C66x CorePac 1 boot NOT complete • 1 = C66x CorePac 1 boot complete
0	BC0	C66x CorePac 0 boot status • 0 = C66x CorePac 0 boot NOT complete • 1 = C66x CorePac 0 boot complete

The BCx bit indicates the boot complete status of the corresponding C66x CorePac. All BCx bits are sticky bits — that is, they can be set only once by the software after device reset and they will be cleared to 0 on all device resets (warm reset and power-on reset).

Boot ROM code is implemented such that each C66x CorePac sets its corresponding BCx bit immediately before branching to the predefined location in memory.

10.2.3.11 Power State Control (PWRSTATECTL) Register

The Power State Control register (PWRSTATECTL) is controlled by the software to indicate the power-saving mode. Under ROM code, the C66x CorePac reads this register to differentiate between the various power saving modes. This register is cleared only by POR and is not changed by any other device reset. See *Hardware Design Guide for KeyStone II Devices* for more information. The PWRSTATECTL register is shown in Figure 10-21 and described in Table 10-41.

Figure 10-21. Power State Control Register (PWRSTATECTL)

31	30	29	28	27	26	25	24	23	22	21	20	19	18	17	16	15	14	13	12	11	10	9	8	7	6	5	4	3	2	1	0
Hibernation Recovery Branch Address																						Width	Wait	Recovery Master	Local Reset Action		Stored SR Index		Hibernation Mode	Hibernation	Rsvd
RW-0000 0000 0000 0000 00																						RW-0	RW-0	RW-0	RW-0		RW-0		RW-0	RW-0	R-0

Legend: R = Read Only, RW = Read/Write; -*n* = value after reset

Table 10-41. Power State Control Register Field Descriptions

Bit	Field	Description
31-10	Hibernation Recovery Branch Address	Used to provide a start address for execution out of the hibernation modes. See the *KeyStone Architecture DSP Bootloader User's Guide*.
9	Width	EMIF16 Width (if the recovery address is in EMIF16 space). • 0 = 8-bit • 1 = 16-bit
8	Wait	Extended Wait (if the recovery address is in EMIF16 space) • 0 = Extended Wait disabled • 1 = Extended Wait enabled
7	Recovery Master	Master performs hibernation recovery • 0 = C66x CorePacs perform hibernation recovery • 1 = ARM CorePac performs hibernation recovery
6-5	Local Reset Action	Action of Local Reset • 00 = Idle on Local Reset • 01 = Branch to the base of MSMC on Local Reset • 10 = Branch to the base of DDR3 on Local Reset • 11 = Branch to the base of L2 on Local Reset (C66x CorePac)
4-3	Stored Index	0-3 value latched in the SR bits of the DEVSTAT register
2	Hibernation Mode	Indicates whether the device is in hibernation mode 1 or mode 2. • 0 = Hibernation mode 1 • 1 = Hibernation mode 2
1	Hibernation	Indicates whether the device is in hibernation mode or not. • 0 = Not in hibernation mode • 1 = Hibernation mode
0	Reserved	Reserved

10.2.3.12 NMI Event Generation to C66x CorePac (NMIGRx) Register

NMIGRx registers generate NMI events to the corresponding C66x CorePac. The 66AK2Hxx has eight (66AK2H12) or four (66AK2H06) NMIGRx registers (NMIGR0 through NMIGR7). The NMIGR0 register generates an NMI event to C66x CorePac0, the NMIGR1 register generates an NMI event to C66x CorePac1, and so on. Writing a 1 to the NMIG field generates an NMI pulse. Writing a 0 has no effect and Reads return 0 and have no other effect. The NMI event generation to the C66x CorePac is shown in Figure 10-22 and described in Table 10-42.

Copyright © 2012–2017, Texas Instruments Incorporated

Figure 10-22. NMI Generation Register (NMIGRx)

31	30	29	28	27	26	25	24	23	22	21	20	19	18	17	16	15	14	13	12	11	10	9	8	7	6	5	4	3	2	1	0
Reserved																															NMIG
R-0000 0000 0000 0000 0000 0000 0000 000																															RW-0

Legend: RW = Read/Write; -*n* = value after reset

Table 10-42. NMI Generation Register Field Descriptions

Bit	Field	Description
31-1	Reserved	Reserved
0	NMIG	Reads return 0 Writes: • 0 = No effect • 1 = Creates NMI pulse to the corresponding C66x CorePac — C66x CorePac0 for NMIGR0, and so forth.

10.2.3.13 IPC Generation (IPCGRx) Registers

The IPCGRx registers facilitate inter-C66x CorePac interrupts.

The 66AK2H12 device has 12 IPCGRx registers (IPCGR0 through IPCGR11) and the 66AK2H06 has six IPCGRx registers (IPCGR0 through IPCGR3 and IPCGR8 and IPCGR9). These registers can be used by external hosts or CorePacs to generate interrupts to other CorePacs. A write of 1 to the IPCG field of the IPCGRx register generates an interrupt pulse to the:

- C66x CorePacx (0 <= x <= 7) (66AK2H12) (0 <= x <= 3) (66AK2H06)
- ARM CorePac core (x-8) (8<=x<=11) (66AK2H12) or (8<=x<=9) (66AK2H06).

These registers also provide a *Source ID* facility identifying up to 28 different sources of interrupts. Allocation of source bits to source processor and meaning is entirely based on software convention. The register field descriptions are given in the following tables. There can be numerous sources for these registers as this is completely controlled by software. Any master that has access to BOOTCFG module space can write to these registers. The IPC Generation register is shown in Figure 10-23 and described in Table 10-43.

Figure 10-23. IPC Generation Registers (IPCGRx)

31	30	29	28	27	26	25	24	23	22	21	20	19	18	17	16	15	14	13	12	11	10	9	8	7	6	5	4	3	2	1	0
SRCS27-SRCS0																												Reserved			IPCG
RW +0 (per bit field)																												R-000			RW-0

Legend: R = Read only; RW = Read/Write; -*n* = value after reset

Table 10-43. IPC Generation Registers Field Descriptions

Bit	Field	Description
31-4	SRCSx	Reads return current value of internal register bit. Writes: • 0 = No effect • 1 = Sets both SRCSx and the corresponding SRCCx.
3-1	Reserved	Reserved
0	IPCG	Reads return 0. Writes: • 0 = No effect • 1 = Creates an inter-DSP/ARM interrupt.

Copyright © 2012–2017, Texas Instruments Incorporated

10.2.3.14 IPC Acknowledgment (IPCARx) Registers

The IPCARx registers facilitate inter-CorePac interrupt acknowledgment.

The 66AK2H12 device has 12 IPCARx registers and the 66AK2H06 has six IPCARx registers. These registers also provide a *Source ID* facility by which up to 28 different sources of interrupts can be identified. Allocation of source bits to source processor and meaning is entirely based on software convention. The register field descriptions are given in the following tables. Virtually anything can be a source for these registers as this is completely controlled by software. Any master that has access to BOOTCFG module space can write to these registers. The IPC Acknowledgment register is shown in Figure 10-24 and described in Table 10-44.

Figure 10-24. IPC Acknowledgment Registers (IPCARx)

31	30	29	28	27	26	25	24	23	22	21	20	19	18	17	16	15	14	13	12	11	10	9	8	7	6	5	4	3	2	1	0
SRCC27-SRCC0																												Reserved			
RW +0 (per bit field)																												R-0000			

Legend: R = Read only; RW = Read/Write; -*n* = value after reset

Table 10-44. IPC Acknowledgment Registers Field Descriptions

Bit	Field	Description
31-4	SRCCx	Reads return current value of internal register bit. Writes: • 0 = No effect • 1 = Clears both SRCCx and the corresponding SRCSx
3-0	Reserved	Reserved

10.2.3.15 IPC Generation Host (IPCGRH) Register

The IPCGRH register facilitates interrupts to external hosts. Operation and use of the IPCGRH register is the same as for other IPCGR registers. The interrupt output pulse created by the IPCGRH register appears on device pin HOUT.

The host interrupt output pulse is stretched so that it is asserted for four bootcfg clock cycles (SYSCLK1/6) followed by a deassertion of four bootcfg clock cycles. Generating the pulse results in a pulse-blocking window that is eight SYSCLK1/6-cycles long. Back-to-back writes to the IPCRGH register with the IPCG bit (bit 0) set, generates only one pulse if the back-to-back writes to IPCGRH are less than the eight SYSCLK1/6 cycle window — the pulse blocking window. To generate back-to-back pulses, the back-to-back writes to the IPCGRH register must be written after the eight SYSCLK1/6 cycle pulse-blocking window has elapsed. The IPC Generation Host register is shown in Figure 10-25 and described in Table 10-45.

Figure 10-25. IPC Generation Registers (IPCGRH)

31	30	29	28	27	26	25	24	23	22	21	20	19	18	17	16	15	14	13	12	11	10	9	8	7	6	5	4	3	2	1	0
SRCS27-SRCS0																												Reserved			IPCG
RW +0 (per bit field)																												R-000			RW +0

Legend: R = Read only; RW = Read/Write; -*n* = value after reset

Table 10-45. IPC Generation Registers Field Descriptions

Bit	Field	Description
31-4	SRCSx	Reads return current value of internal register bit. Writes: • 0 = No effect • 1 = Sets both SRCSx and the corresponding SRCCx.
3-1	Reserved	Reserved

Copyright © 2012–2017, Texas Instruments Incorporated

Table 10-45. IPC Generation Registers Field Descriptions (continued)

Bit	Field	Description
0	IPCG	Reads return 0. Writes: • 0 = No effect • 1 = Creates an interrupt pulse on device pin (host interrupt/event output in HOUT pin)

10.2.3.16 IPC Acknowledgment Host (IPCARH) Register

The IPCARH register facilitates external host interrupts. Operation and use of the IPCARH register is the same as for other IPCAR registers. The IPC Acknowledgment Host register is shown in Figure 10-26 and described in Table 10-46.

Figure 10-26. Acknowledgment Register (IPCARH)

31	30	29	28	27	26	25	24	23	22	21	20	19	18	17	16	15	14	13	12	11	10	9	8	7	6	5	4	3	2	1	0
SRCC27-SRCC0																												Reserved			
RW +0 (per bit field)																												R-0000			

Legend: R = Read only; RW = Read/Write; -*n* = value after reset

Table 10-46. IPC Acknowledgment Register Field Descriptions

Bit	Field	Description
31-4	SRCCx	Reads the return current value of the internal register bit. Writes: • 0 = No effect • 1 = Clears both SRCCx and the corresponding SRCSx
3-0	Reserved	Reserved

10.2.3.17 Timer Input Selection Register (TINPSEL)

The Timer Input Selection register selects timer inputs and is shown in Figure 10-27 and described in Table 10-47.

Figure 10-27. Timer Input Selection Register (TINPSEL)

31	30	29	28	27	26	25	24
TINPHSEL15	TINPLSEL15	TINPHSEL14	TINPLSEL14	TINPHSEL13	TINPLSEL13	TINPHSEL12	TINPLSEL12
RW-0	RW-0	RW-0	RW-0	RW-0	RW-0	RW-0	RW-0
23	22	21	20	19	18	17	16
TINPHSEL11	TINPLSEL11	TINPHSEL10	TINPLSEL10	TINPHSEL9	TINPLSEL9	TINPHSEL8	TINPLSEL8
RW-0	RW-0	RW-0	RW-0	RW-0	RW-0	RW-0	RW-0
15	14	13	12	11	10	9	8
TINPHSEL7	TINPLSEL7	TINPHSEL6	TINPLSEL6	TINPHSEL5	TINPLSEL5	TINPHSEL4	TINPLSEL4
RW-0	RW-0	RW-0	RW-0	RW-0	RW-0	RW-0	RW-0
7	6	5	4	3	2	1	0
TINPHSEL3	TINPLSEL3	TINPHSEL2	TINPLSEL2	TINPHSEL1	TINPLSEL1	TINPHSEL0	TINPLSEL0
RW-0	RW-0	RW-0	RW-0	RW-0	RW-0	RW-0	RW-0

LEGEND: R = Read only; RW = Read/Write; -*n* = value after reset

Table 10-47. Timer Input Selection Field Description

Bit	Field	Description
31	TINPHSEL15	Input select for TIMER15 high. • 0 = TIMI0 • 1 = TIMI1
30	TINPLSEL15	Input select for TIMER15 low. • 0 = TIMI0 • 1 = TIMI1

Copyright © 2012–2017, Texas Instruments Incorporated

Table 10-47. Timer Input Selection Field Description (continued)

Bit	Field	Description
29	TINPHSEL14	Input select for TIMER14 high. • 0 = TIMI0 • 1 = TIMI1
28	TINPLSE14	Input select for TIMER14 low. • 0 = TIMI0 • 1 = TIMI1
27	TINPHSEL13	Input select for TIMER13 high. • 0 = TIMI0 • 1 = TIMI1
26	TINPLSEL13	Input select for TIMER13 low. • 0 = TIMI0 • 1 = TIMI1
25	TINPHSEL12	Input select for TIMER12 high. • 0 = TIMI0 • 1 = TIMI1
24	TINPLSEL12	Input select for TIMER12low. • 0 = TIMI0 • 1 = TIMI1
23	TINPHSEL11	Input select for TIMER11 high. • 0 = TIMI0 • 1 = TIMI1
22	TINPLSEL11	Input select for TIMER11 low. • 0 = TIMI0 • 1 = TIMI1
21	TINPHSEL10	Input select for TIMER10 high. • 0 = TIMI0 • 1 = TIMI1
20	TINPLSEL10	Input select for TIMER10 low. • 0 = TIMI0 • 1 = TIMI1
19	TINPHSEL9	Input select for TIMER9 high. • 0 = TIMI0 • 1 = TIMI1
18	TINPLSEL9	Input select for TIMER9 low. • 0 = TIMI0 • 1 = TIMI1
17	TINPHSEL8	Input select for TIMER8 high. • 0 = TIMI0 • 1 = TIMI1
16	TINPLSEL8	Input select for TIMER8 low. • 0 = TIMI0 • 1 = TIMI1
15	TINPHSEL7	Input select for TIMER7 high. (66AK2H14/12 only) • 0 = TIMI0 • 1 = TIMI1
14	TINPLSEL7	Input select for TIMER7 low. (66AK2H14/12 only) • 0 = TIMI0 • 1 = TIMI1
13	TINPHSEL6	Input select for TIMER6 high. (66AK2H14/12 only) • 0 = TIMI0 • 1 = TIMI1

Copyright © 2012–2017, Texas Instruments Incorporated

Table 10-47. Timer Input Selection Field Description (continued)

Bit	Field	Description
12	TINPLSEL6	Input select for TIMER6 low. (66AK2H14/12 only) • 0 = TIMI0 • 1 = TIMI1
11	TINPHSEL5	Input select for TIMER5 high. (66AK2H14/12 only) • 0 = TIMI0 • 1 = TIMI1
10	TINPLSEL5	Input select for TIMER5 low. (66AK2H14/12 only) • 0 = TIMI0 • 1 = TIMI1
9	TINPHSEL4	Input select for TIMER4 high. (66AK2H14/12 only) • 0 = TIMI0 • 1 = TIMI1
8	TINPLSEL4	Input select for TIMER4 low. (66AK2H14/12 only) • 0 = TIMI0 • 1 = TIMI1
7	TINPHSEL3	Input select for TIMER3 high. • 0 = TIMI0 • 1 = TIMI1
6	TINPLSEL3	Input select for TIMER3 low. • 0 = TIMI0 • 1 = TIMI1
5	TINPHSEL2	Input select for TIMER2 high. • 0 = TIMI0 • 1 = TIMI1
4	TINPLSEL2	Input select for TIMER2 low. • 0 = TIMI0 • 1 = TIMI1
3	TINPHSEL1	Input select for TIMER1 high. • 0 = TIMI0 • 1 = TIMI1
2	TINPLSEL1	Input select for TIMER1 low. • 0 = TIMI0 • 1 = TIMI1

10.2.3.18 Timer Output Selection Register (TOUTPSEL)

The control register TOUTSEL handles the timer output selection and is shown in Figure 10-28 and described in Table 10-48.

Figure 10-28. Timer Output Selection Register (TOUTPSEL)

31	30	29	28	27	26	25	24	23	22	21	20	19	18	17	16	15	14	13	12	11	10	9	8	7	6	5	4	3	2	1	0
Reserved																						TOUTPSEL1					TOUTPSEL0				
R-00000000000000000000																						RW-00001					RW-00000				

Legend: R = Read only; RW = Read/Write; -*n* = value after reset

Table 10-48. Timer Output Selection Register Field Descriptions

Bit	Field	Description
31-10	Reserved	Reserved
9-5	TOUTPSEL1	Output select for TIMO1 • 00000: TOUTL0 • 00001: TOUTH0 • 00010: TOUTL1 • 00011: TOUTH1 • 00100: TOUTL2 • 00101: TOUTH2 • 00110: TOUTL3 • 00111: TOUTH3 • 01000: TOUTL4 (66AK2H14/12 only) • 01001: TOUTH4 (66AK2H14/12 only) • 01010: TOUTL5 (66AK2H14/12 only) • 01011: TOUTH5 (66AK2H14/12 only) • 01100: TOUTL6 (66AK2H14/12 only) • 01101: TOUTH6 (66AK2H14/12 only) • 01110: TOUTL7 (66AK2H14/12 only) • 01111: TOUTH7 (66AK2H14/12 only) • 10000: TOUTL8 • 10001: TOUTH8 • 10010: TOUTL9 • 10011: TOUTH9 • 10100: TOUTL10 • 10101: TOUTH10 • 10110: TOUTL11 • 10111: TOUTH11 • 11000: TOUTL12 • 11001: TOUTH12 • 11010: TOUTL13 • 11011: TOUTH13 • 11100: TOUTL14 • 11101: TOUTH14 • 11110: TOUTL15 • 11111: TOUTH15
4-0	TOUTPSEL0	Output select for TIMO0 • 00000: TOUTL0 • 00001: TOUTH0 • 00010: TOUTL1 • 00011: TOUTH1 • 00100: TOUTL2 • 00101: TOUTH2 • 00110: TOUTL3 • 00111: TOUTH3 • 01000: TOUTL4 (66AK2H14/12 only) • 01001: TOUTH4 (66AK2H14/12 only) • 01010: TOUTL5 (66AK2H14/12 only) • 01011: TOUTH5 (66AK2H14/12 only) • 01100: TOUTL6 (66AK2H14/12 only) • 01101: TOUTH6 (66AK2H14/12 only) • 01110: TOUTL7 (66AK2H14/12 only) • 01111: TOUTH7 (66AK2H14/12 only) • 10000: TOUTL8 • 10001: TOUTH8 • 10010: TOUTL9 • 10011: TOUTH9 • 10100: TOUTL10 • 10101: TOUTH10 • 10110: TOUTL11 • 10111: TOUTH11 • 11000: TOUTL12 • 11001: TOUTH12 • 11010: TOUTL13 • 11011: TOUTH13 • 11100: TOUTL14 • 11101: TOUTH14 • 11110: TOUTL15 • 11111: TOUTH15

10.2.3.19 Reset Mux (RSTMUXx) Register

Software controls the Reset Mux block through the reset multiplex registers using RSTMUX0 through RSTMUX11 (66AK2H12) or RSTMUX0 through RSTMUX3 (66AK2H06) for each of the C66x CorePacs and RSTMUX8 and RSTMUX9 (66AK2H06) for the ARM CorePac on the device. These registers are in Bootcfg memory space. The Reset Mux register is shown in Figure 10-29 and described in Table 10-49.

Figure 10-29. Reset Mux Register

31	30	29	28	27	26	25	24	23	22	21	20	19	18	17	16
Reserved															
R-0000 0000 0000 0000 0000 00															
15	14	13	12	11	10	9	8	7	6	5	4	3	2	1	0
Reserved						EVTSTAT CLR	Rsvd	DELAY			EVTSTAT	OMODE			LOCK
R-0000 0000 0000 0000 0000 00						RC-0	R-0	RW-100			R-0	RW-000			RW-0

Legend: R = Read only; RW = Read/Write; -*n* = value after reset; RC = Read only and write 1 to clear

Copyright © 2012–2017, Texas Instruments Incorporated

Table 10-49. Reset Mux Register Field Descriptions

Bit	Field	Description
31-10	Reserved	Reserved
9	EVTSTATCLR	Clear event status • 0 = Writing 0 has no effect • 1 = Writing 1 to this bit clears the EVTSTAT bit
8	Reserved	Reserved
7-5	DELAY	Delay cycles between NMI and local reset • 000b = 256 SYSCLK1/6 cycles delay between NMI and local reset, when OMODE = 100b • 001b = 512 SYSCLK1/6 cycles delay between NMI and local reset, when OMODE = 100b • 010b = 1024 SYSCLK1/6 cycles delay between NMI and local reset, when OMODE = 100b • 011b = 2048 SYSCLK1/6 cycles delay between NMI and local reset, when OMODE = 100b • 100b = 4096 SYSCLK1/6 cycles delay between NMI and local reset, when OMODE = 100b (default) • 101b = 8192 SYSCLK1/6 cycles delay between NMI and local reset, when OMODE = 100b • 110b = 16384 SYSCLK1/6 cycles delay between NMI and local reset, when OMODE = 100b • 111b = 32768 SYSCLK1/6 cycles delay between NMI and local reset, when OMODE = 100b
4	EVTSTAT	Event status • 0 = No event received (Default) • 1 = WD timer event received by Reset Mux block
3-1	OMODE	Timer event operation mode • 000b = WD timer event input to the Reset Mux block does not cause any output event (default) • 001b = Reserved • 010b = WD Timer Event input to the Reset Mux block causes local reset input to C66x CorePac. Note that for Cortex-A15 processor watchdog timers, the Local Reset output event of the RSTMUX logic is connected to the Device Reset generation to generate reset to PLL Controller. • 011b = WD Timer Event input to the Reset Mux block causes NMI input to C66x CorePac. Note that for Cortex-A15 processor watchdog timers, the Local Reset output event of the RSTMUX logic is connected to the Device Reset generation to generate reset to PLL Controller. • 100b = WD Timer Event input to the Reset Mux block causes NMI input followed by local reset input to C66x CorePac. Delay between NMI and local reset is set in DELAY bit field. Note that for Cortex-A15 processor watchdog timers, the Local Reset output event of the RSTMUX logic is connected to the Device Reset generation to generate reset to PLL Controller. • 101b = WD timer event input to the Reset Mux block causes device reset to 66AK2Hxx. Note that for Cortex-A15 processor watchdog timers, the Local Reset output event of the RSTMUX logic is connected to the Device Reset generation to generate reset to PLL Controller. • 110b = Reserved • 111b = Reserved
0	LOCK	Lock register fields • 0 = Register fields are not locked (default) • 1 = Register fields are locked until the next timer reset

10.2.3.20 Device Speed (DEVSPEED) Register

The Device Speed register shows the device speed grade and is shown in Figure 10-30 and described in Table 10-50.

Figure 10-30. Device Speed Register (DEVSPEED)

31	30	29	28	27	26	25	24	23	22	21	20	19	18	17	16	15	14	13	12	11	10	9	8	7	6	5	4	3	2	1	0
Reserved				DEVSPEED												Reserved				ARMSPEED											
R-n				R-n												R-n				R-n											

Legend: R = Read only; -*n* = value after reset

Table 10-50. Device Speed Register Field Descriptions

Bit	Field	Description
31-28	Reserved	Reserved. Read only
27-16	DEVSPEED	Indicates the speed of the device (read only) • 0b0000 0000 0000 = 800 MHz • 0b0000 0000 0001 = 1000 MHz • 0b0000 0000 001x = 1200 MHz • 0b0000 0000 01xx = Reserved • 0b0000 0000 1xxx = Reserved • 0b0000 0001 xxxx = Reserved • 0b0000 001x xxxx = Reserved • 0b0000 01xx xxxx = Reserved • 0b0000 1xxx xxxx = 1200 MHz • 0b0001 xxxx xxxx= 1000 MHz • 0b001x xxxx xxxx = 800 MHz
15-12	Reserved	Reserved. Read only
11-0	ARMSPEED	Indicates the speed of the ARM (read only) • 0b0000 0000 0000 = 800 MHz • 0b0000 0000 0001 = 1000 MHz • 0b0000 0000 001x = 1200 MHz • 0b0000 0000 01xx = 1350 MHz(1) • 0b0000 0000 1xxx = 1400 MHz(1) • 0b0000 0001 xxxx = Reserved • 0b0000 001x xxxx = 1400 MHz(1) • 0b0000 01xx xxxx = 1350.8 MHz(1) • 0b0000 1xxx xxxx = 1200 MHz • 0b0001 xxxx xxxx= 1000 MHz • 0b001x xxxx xxxx = 800 MHz

(1) Possible future support.

10.2.3.21 ARM Endian Configuration Register 0 (ARMENDIAN_CFGr_0), r=0..7

The registers defined in ARM Configuration register 0 (ARMENDIAN_CFGr_0) control the way Cortex-A15 processor core access to peripheral MMRs shows up in the Cortex-A15 processor registers. The purpose is to provide an endian-invariant view of the peripheral MMRs when performing a 32-bit access. (Only one of the eight register sets is shown in Figure 10-31 and described in Table 10-51.)

Figure 10-31. ARM Endian Configuration Register 0 (ARMENDIAN_CFGr_0), r=0..7

31	30	29	28	27	26	25	24	23	22	21	20	19	18	17	16	15	14	13	12	11	10	9	8	7	6	5	4	3	2	1	0
BASEADDR																								Reserved							
RW-0000 0000 0000 0000 0000 0000																								R-0000 0000							

Legend: RW = Read/Write; R = Read only

Table 10-51. ARM Endian Configuration Register 0 Field Descriptions

Bit	Field	Description
31-8	BASEADDR	24-bit Base Address of Configuration Region R This base address defines the start of a contiguous block of memory-mapped register space for which a word swap is done by the ARM CorePac bridge.
7-0	Reserved	Reserved

10.2.3.22 ARM Endian Configuration Register 1 (ARMENDIAN_CFGr_1), r=0..7

The registers defined in ARM Configuration register 1 (ARMENDIAN_CFGr_1) control the way Cortex-A15 processor core access to peripheral MMRs shows up in the Cortex-A15 processor registers. The purpose is to provide an endian-invariant view of the peripheral MMRs when performing a 32-bit access. (Only one of the eight register sets is shown in Figure 10-32 and described in Table 10-52.)

Copyright © 2012–2017, Texas Instruments Incorporated

Figure 10-32. ARM Endian Configuration Register 1 (ARMENDIAN_CFGr_1), r=0..7

31	30	29	28	27	26	25	24	23	22	21	20	19	18	17	16	15	14	13	12	11	10	9	8	7	6	5	4	3	2	1	0
Reserved																												SIZE			
R-0000 0000 0000 0000 0000 0000 0000																												RW-0000			

Legend: RW = Read/Write; R = Read only

Table 10-52. ARM Endian Configuration Register 1 Field Descriptions

Bit	Field	Description
31-4	Reserved	Reserved
3-0	SIZE	4-bit encoded size of Configuration Region R The value in the SIZE field defines the size of the contiguous block of memory-mapped register space for which a word swap is done by the ARM CorePac bridge (starting from ARMENDIAN_CFGr_0.BASEADDR). • 0000 : 64KB • 0001 : 128KB • 0010 : 256KB • 0011 : 512KB • 0100 : 1MB • 0101 : 2MB • 0110 : 4MB • 0111 : 8MB • 1000 : 16MB • 1001 : 32MB • 1010 : 64MB • 1011 : 128MB • Others : Reserved

10.2.3.23 ARM Endian Configuration Register 2 (ARMENDIAN_CFGr_2), r=0..7

The registers defined in ARM Configuration register 2 (ARMENDIAN_CFGr_2) enable the word swapping of a region. The ARMENDIAN_CFGr_2 register is shown in Figure 10-33 and described in Table 10-53.

Figure 10-33. ARM Endian Configuration Register 2 (ARMENDIAN_CFGr_2), r=0..7

31	30	29	28	27	26	25	24	23	22	21	20	19	18	17	16	15	14	13	12	11	10	9	8	7	6	5	4	3	2	1	0
Reserved																															DIS
R-0000 0000 0000 0000 0000 0000 0000 000																															RW-0

Legend: RW = Read/Write

Table 10-53. ARM Endian Configuration Register 2 Field Descriptions

Bit	Field	Description
31-1	Reserved	Reserved
0	DIS	Disabling the word swap of a region • 0 : Enable word swap for region • 1 : Disable word swap for region

Copyright © 2012–2017, Texas Instruments Incorporated

10.2.3.24 Chip Miscellaneous Control (CHIP_MISC_CTL0) Register

The Chip Miscellaneous Control (CHIP_MISC_CTL0) register is shown in Figure 10-34 and described in Table 10-54.

Figure 10-34. Chip Miscellaneous Control Register (CHIP_MISC_CTL0)

31	30	29	28	27	26	25	24	23	22	21	20	19	18	17	16
Reserved													USB_PME_EN	AETMUXSEL1	AETMUXSEL0
R-0													RW-0	RW-0	RW-0
15	14	13	12	11	10	9	8	7	6	5	4	3	2	1	0
Reserved		Rsvd	MSMC_BLOCK_PARITY_RST	Reserved									QM_PRIORITY		
RW-0		RW-0	RW-0	RW-0									RW-0		

Legend: R = Read only; W = Write only; -*n* = value after reset

Table 10-54. Chip Miscellaneous Control Register Field Descriptions

Bit	Field	Description
31-19	Reserved	Reserved.
18	USB_PME_EN	Enables wakeup event generation from USB • 0 = Disable PME event generation • 1 = Enable PME event generation
17	AETMUXSEL1	Controls the mux that selects whether an AET event from EDMA CC2 or EDMA CC3 is connected to the C66x Interrupt Controller • 0 = EDMA CC2 (default) • 1 = EDMA CC3
16	AETMUXSEL0	Controls the mux that selects whether an AET event from EDMA CC2 or EDMA CC4 is connected to the C66x Interrupt Controller • 0 = EDMA CC2 (default) • 1 = EDMA CC4
15-14	Reserved	Reserved
13	Reserved	Reserved
12	MSMC_BLOCK_PARITY_RST	Controls MSMC parity RAM reset. When set to '1' means the MSMC parity RAM will not be reset.
11-3	Reserved	Reserved
2-0	QM_PRIORITY	Control the priority level for the transactions from QM_Master port, which access the external linking RAM.

10.2.3.25 Chip Miscellaneous Control (CHIP_MISC_CTL1) Register

The Chip Miscellaneous Control (CHIP_MISC_CTL1) register is shown in Figure 10-35 and described in Table 10-55.

Figure 10-35. Chip Miscellaneous Control Register (CHIP_MISC_CTL1)

31	30	29	28	27	26	25	24	23	22	21	20	19	18	17	16	15	14	13	12	11	10	9	8	7	6	5	4	3	2	1	0
Reserved																	IO_TRACE_SEL	ARM_PLL_EN	Reserved												
R-0000 0000 00000000																	RW-0	RW-0	RW-0000000000000												

Legend: R = Read only; RW = Read/Write; -*n* = value after reset

Table 10-55. Chip Miscellaneous Control Register Field Descriptions

Bit	Field	Description
31-15	Reserved	Reserved.
14	IO_TRACE_SEL	This bit controls the pin muxing of GPIO[31:17] and EMU[33:19] pin • 0 = GPIO[31:17] is selected • 1 = EMU[33:19] pins is selected

Copyright © 2012–2017, Texas Instruments Incorporated

Table 10-55. Chip Miscellaneous Control Register Field Descriptions (continued)

Bit	Field	Description
13	ARM_PLL_EN	This bit controls the glitchfree clock mux between bypass clock and ARM PLL output clock • 0 = Bypass clock (default) • 1 = PLL output clock
12-0	Reserved	

10.2.3.26 System Endian Status Register (SYSENDSTAT)

This register provides a way for reading the system endianness in an endian-neutral way. A zero value indicates big endian and a nonzero value indicates little endian. The SYSENDSTAT register captures the LENDIAN BOOTMODE pin and is used by the BOOTROM to guide the bootflow. The value is latched on the rising edge of $\overline{\text{POR}}$ or $\overline{\text{RESETFULL}}$. The SYSENDSTAT register is shown in Figure 10-36 and described in Table 10-56.

Figure 10-36. System Endian Status Register

31	30	29	28	27	26	25	24	23	22	21	20	19	18	17	16	15	14	13	12	11	10	9	8	7	6	5	4	3	2	1	0
Reserved																															SYSENDSTAT
R-0000 0000 0000 0000 0000 0000 0000 000																															R-0

Legend: RW = Read/Write; -*n* = value after reset

Table 10-56. System Endian Status Register Field Descriptions

Bit	Field	Description
31-1	Reserved	Reserved
0	SYSENDSTAT	Reflects the same value as the LENDIAN bit in the DEVSTAT register. • 0 = C66x/System is in Big Endian • 1 = C66x/System is in Little Endian

10.2.3.27 SYNECLK_PINCTL Register

This register controls the routing of recovered clock signals from any Ethernet port (SGMII of the multiport switches) to the clock output TSRXCLKOUT0/TSRXCLKOUT1. The SYNECLK_PINCTL register is shown in Figure 10-37 and described in Table 10-57.

Figure 10-37. SYNECLK_PINCTL Register

31	30	29	28	27	26	25	24	23	22	21	20	19	18	17	16	15	14	13	12	11	10	9	8	7	6	5	4	3	2	1	0
Reserved																									TSRXCLKOUT1SEL			Rsvd	TSRXCLKOUT0SEL		
R-0000 0000 0000 0000 0000 0000 0																									RW-0				RW-0		

Legend: RW = Read/Write; -*n* = value after reset

Table 10-57. SYNECLK_PINCTL Register Field Descriptions

Bit	Field	Description
31-7	Reserved	
6-4	TSRXCLKOUT1SEL	• 000 = SGMII Lane 0 rxbclk • 001 = SGMII Lane 1 rxbclk • 010 = SGMII Lane 2 rxbclk • 011 = SGMII Lane 3 rxbclk • 100 = Reserved. Do not write. • 101 = Reserved. Do not write. • 110 = Reserved. Do not write. • 111 = Reserved. Do not write.
3	Reserved	

Copyright © 2012–2017, Texas Instruments Incorporated

Table 10-57. SYNECLK_PINCTL Register Field Descriptions (continued)

Bit	Field	Description
2-0	TSRXCLKOUT0SEL	• 000 = SGMII Lane 0 rxbclk • 001 = SGMII Lane 1 rxbclk • 010 = SGMII Lane 2 rxbclk • 011 = SGMII Lane 3 rxbclk • 100 = Reserved. Do not write. • 101 = Reserved. Do not write. • 110 = Reserved. Do not write. • 111 = Reserved. Do not write.

10.2.3.28 USB PHY Control (USB_PHY_CTLx) Registers

The USB PHY Control (USB_PHY_CTLx) registers are shown in Figure 10-38, Figure 10-39, Figure 10-40, Figure 10-41, Figure 10-42, and Figure 10-43 and described in Table 10-58, Table 10-59, Table 10-60, Table 10-61, Figure 10-42, and Table 10-63.

Figure 10-38. USB_PHY_CTL0 Register

31	30	29	28	27	26	25	24	23	22	21	20	19	18	17	16
Reserved															
R-0															
15	14	13	12	11	10	9	8	7	6	5	4	3	2	1	0
Reserved				PHY_RTUNE_ACK	PHY_RTUNE_REQ	Rsvd	PHY_TC_VATESTENB		PHY_TC_TEST_POWERDOWN_SSP	PHY_TC_TEST_POWERDOWN_HSP	PHY_TC_LOOPBACKENB	Rsvd	UTMI_VBUSVLDEXT	UTMI_TXBITSTUFFENH	UTMI_TXBITSTUFFEN
R-0				R-0	R/W-0	R-0	R/W-00		R/W-0	R/W-0	R/W-0	R-0	R/W-0	R/W-0	R/W-0

Legend: R = Read only; W = Write only; -*n* = value after reset

Table 10-58. USB_PHY_CTL0 Register Field Descriptions

Bit	Field	Description
31-12	Reserved	Reserved
11	PHY_RTUNE_ACK	The PHY uses an external resistor to calibrate the termination impedances of the PHY's high-speed inputs and outputs. The resistor is shared between the USB2.0 high-speed outputs and the Super-speed I/O. Each time the PHY is taken out of a reset, a termination calibration is performed. For SS link, the calibration can also be requested externally by asserting the PHY_RTUNE_REQ. When the calibration is complete, the PHY_RTUNE_ACK transitions low. A resistor calibration on the SS link cannot be performed while the link is operational
10	PHY_RTUNE_REQ	See PHY_RTUNE_ACK.
9	Reserved	Reserved
8-7	PHY_TC_VATESTENB	Analog Test Pin Select. Enables analog test voltages to be placed on the ID pin. • 11 = Invalid setting. • 10 = Invalid setting. • 01 = Analog test voltages can be viewed or applied on ID. • 00 = Analog test voltages cannot be viewed or applied on ID.
6	PHY_TC_TEST_POWERDOWN_SSP	SS Function Circuits Power-Down Control. Powers down all SS function circuitry in the PHY for IDDQ testing.
5	PHY_TC_TEST_POWERDOWN_HSP	HS Function Circuits Power-Down Control Powers down all HS function circuitry in the PHY for IDDQ testing.

Copyright © 2012–2017, Texas Instruments Incorporated

Table 10-58. USB_PHY_CTL0 Register Field Descriptions (continued)

Bit	Field	Description
4	PHY_TC_LOOPBACKENB	Loop-back Test Enable Places the USB3.0 PHY in HS Loop-back mode, which concurrently enables the HS receive and transmit logic. • 1 = During HS data transmission, the HS receive logic is enabled. • 0 = During HS data transmission, the HS receive logic is disabled.
3	Reserved	• Reserved
2	UTMI_VBUSVLDEXT	External VBUS Valid Indicator Function: Valid in Device mode and only when the VBUSVLDEXTSEL signal is set to 1'b1. VBUSVLDEXT indicates whether the VBUS signal on the USB cable is valid. In addition, VBUSVLDEXT enables the pull-up resistor on the D+ line. • 1 = VBUS signal is valid, and the pull-up resistor on D+ is enabled. • 0 = VBUS signal is not valid, and the pull-up resistor on D+ is disabled.
1	UTMI_TXBITSTUFFENH	High-byte Transmit Bit-Stuffing Enable Function: controls bit stuffing on DATAINH[7:0] when OPMODE[1:0]=11b. • 1 = Bit stuffing is enabled. • 0 = Bit stuffing is disabled.
0	UTMI_TXBITSTUFFEN	Low-byte Transmit Bit-Stuffing Enable Function: controls bit stuffing on DATAIN[7:0] when OPMODE[1:0]=11b. • 1 = Bit stuffing is enabled. • 0 = Bit stuffing is disabled.

Figure 10-39. USB_PHY_CTL1 Register

31	30	29	28	27	26	25	24	23	22	21	20	19	18	17	16
Reserved															
R-0															
15	14	13	12	11	10	9	8	7	6	5	4	3	2	1	0
Reserved										PIPE_REF_CLKREQ_N	PIPE_TX2RX_LOOPBK	PIPE_EXT_PCLK_REQ	PIPE_ALT_CLK_SEL	PIPE_ALT_CLK_REQ	PIPE_ALT_CLK_EN
R-0										R-0	R/W-0	R/W-0	R/W-0	R-0	R/W-0

Legend: R = Read only; R/W = Read/Write, -*n* = value after reset

Table 10-59. USB_PHY_CTL1 Register Field Descriptions

Bit	Field	Description
31-6	Reserved	Reserved
5	PIPE_REF_CLKREQ_N	Reference Clock Removal Acknowledge. When the pipeP_power-down control into the PHY turns off the MPLL in the P3 state, PIPE_REF_CLKREQ_N is asserted after the PLL is stable and the reference clock can be removed.
4	PIPE_TX2RX_LOOPBK	Loop-back. When this signal is asserted, data from the transmit predriver is looped back to the receiver slicers. LOS is bypassed and based on the tx_en input so that rx_los=!tx_data_en.
3	PIPE_EXT_PCLK_REQ	External PIPE Clock Enable Request. When asserted, this signal enables the pipeP_pclk output regardless of power state (along with the associated increase in power consumption).
2	PIPE_ALT_CLK_SEL	Alternate Clock Source Select. Selects the alternate clock sources instead of the internal MPLL outputs for the PCS clocks. • 1 = Uses alternate clocks. • 0 = Users internal MPLL clocks. Change only during a reset.

Copyright © 2012–2017, Texas Instruments Incorporated

Table 10-59. USB_PHY_CTL1 Register Field Descriptions (continued)

Bit	Field	Description
1	PIPE_ALT_CLK_REQ	Alternate Clock Source Request. Indicates that the alternate clocks are needed by the slave PCS (that is, to boot the master MPLL). Connect to the alt_clk_en on the master.
0	PIPE_ALT_CLK_EN	Alternate Clock Enable. Enables the ref_pcs_clk and ref_pipe_pclk output clocks (if necessary, powers up the MPLL).

Figure 10-40. USB_PHY_CTL2 Register

31	30	29	28	27	26	25	24	23	22	21	20	19	18	17	16
Reserved		PHY_PC_LOS_BIAS			PHY_PC_TXVREFTUNE				PHY_PC_ TXRISETUNE		PHY_PC_ TXRESTUNE		PHY_PC_ TX PREEMP PULSE T UNE	PHY_PC_TXPREEMP AMPTUNE	
R-0		R/W-101			R/W-1000				R/W-01		R/W-01		R/W-0	R/W-00	
15	14	13	12	11	10	9	8	7	6	5	4	3	2	1	0
PHY_PC_ TXHSXVTUNE		PHY_PC_TXFSLSTUNE				PHY_PC_SQRXTUNE			PHY_PC_OTGTUNE			Rsvd	PHY_PC_ COMPDISTUNE		
R/W-11		R/W-0011				R/W-011			R/W-100			R-0	R/W-100		

Legend: R = Read only; R/W = Read/Write, -*n* = value after reset

Table 10-60. USB_PHY_CTL2 Register Field Descriptions

Bit	Field	Description
31-30	Reserved	Reserved
29-27	PHY_PC_LOS_BIAS	Loss-of-Signal Detector Threshold Level Control. Sets the LOS detection threshold level. • +1 = results in a +15 mVp incremental change in the LOS threshold. • –1 = results in a –15 mVp incremental change in the LOS threshold. Note: the 000b setting is reserved and must not be used.
26-23	PHY_PC_TXVREFTUNE	HS DC Voltage Level Adjustment. Adjusts the high-speed DC level voltage. • +1 = results in a +1.25% incremental change in high-speed DC voltage level. • –1 = results in a –1.25% incremental change in high-speed DC voltage level.
22-21	PHY_PC_TXRISETUNE	HS Transmitter Rise/Fall TIme Adjustment. Adjusts the rise/fall times of the high-speed waveform. • +1 = results in a –4% incremental change in the HS rise/fall time. • –1 = results in a +4% incremental change in the HS rise/fall time.
20-19	PHY_PC_TXRESTUNE	USB Source Impedance Adjustment. Some applications require additional devices to be added on the USB, such as a series switch, which can add significant series resistance. This bus adjusts the driver source impedance to compensate for added series resistance on the USB.
18	PHY_PC_ TXPREEMPPULSETUNE	HS Transmitter Pre-Emphasis Duration Control. Controls the duration for which the HS pre-emphasis current is sourced onto DP or DM. It is defined in terms of unit amounts. One unit of pre-emphasis duration is approximately 580 ps and is defined as 1x pre-emphasis duration. This signal valid only if either txpreempamptune[1] or txpreempamptune[0] is set to 1. • 1 = 1x, short pre-emphasis current duration. • 0 = 2x, long pre-emphasis current duration.

Copyright © 2012–2017, Texas Instruments Incorporated

Table 10-60. USB_PHY_CTL2 Register Field Descriptions (continued)

Bit	Field	Description
17-16	PHY_PC_TXPREEMPAMPTUNE	HS Transmitter Pre-Emphasis Current Control. Controls the amount of current sourced to DP and DM after a J-to-K or K-to-J transition. The HS Transmitter pre-emphasis current is defined in terms of unit amounts. One unit amount is approximately 600 µA and is defined as 1x pre-emphasis current. • 11 = 3x pre-emphasis current. • 10 = 2x pre-emphasis current. • 01 = 1x pre-emphasis current. • 00 = HS Transmitter pre-emphasis is disabled.
15-14	PHY_PC_TXHSXVTUNE	Transmitter High-Speed Crossover Adjustment. Adjusts the voltage at which the DP and DM signals cross while transmitting in HS mode. • 11 = Default setting. • 10 = +15 mV • 01 = –15 mV • 00 = Reserved
13-10	PHY_PC_TXFSLSTUNE	FS/LS Source Impedance Adjustment. Adjusts the low- and full-speed single-ended source impedance while driving high. This parameter control is encoded in thermometer code. • +1 = results in a –2.5% incremental change in threshold voltage level. • –1 = results in a +2.5% incremental change in threshold voltage level. Any nonthermometer code setting (that is 1001) is not supported and reserved.
9-7	PHY_PC_SQRXTUNE	Squelch Threshold Adjustment. Adjusts the voltage level for the threshold used to detect valid high-speed data. • +1 = results in a –5% incremental change in threshold voltage level. • –1 = results in a +5% incremental change in threshold voltage level.
6-4	PHY_PC_OTGTUNE	VBUS Valid Threshold Adjustment. Adjusts the voltage level for the VBUS valid threshold. • +1 = results in a +1.5% incremental change in threshold voltage level. • –1 = results in a –1.5% incremental change in threshold voltage level.
3	Reserved	Reserved
2-0	PHY_PC_COMPDISTUNE	Disconnect Threshold Adjustment. Adjusts the voltage level for the threshold used to detect a disconnect event at the host. • +1 = results in a +1.5% incremental change in the threshold voltage level. • –1 = results in a –1.5% incremental change in the threshold voltage level.

Figure 10-41. USB_PHY_CTL3 Register

31	30	29	28	27	26	25	24	23	22	21	20	19	18	17	16
Reserved		PHY_PC_PCS_TX_SWING_FULL							PHY_PC_PCS_TX_DEEMPH_6DB						Rsvd
R-0		R/W-1111000							R/W-100000						R-0
15	14	13	12	11	10	9	8	7	6	5	4	3	2	1	0
Reserved					PHY_PC_PCS_TX_DEEMPH_3P5DB					PHY_PC_LOS_LEVEL					
R-0					R/W-010101					R/W-01001					

Legend: R = Read only; R/W = Read/Write, -*n* = value after reset

Table 10-61. USB_PHY_CTL3 Register Field Descriptions

Bit	Field	Description
31-30	Reserved	Reserved
29-23	PHY_PC_PCS_TX_SWING_FULL	Tx Amplitude (Full Swing Mode). Sets the launch amplitude of the transmitter. It can be used to tune Rx eye for compliance.

Copyright © 2012–2017, Texas Instruments Incorporated

Table 10-61. USB_PHY_CTL3 Register Field Descriptions (continued)

Bit	Field	Description
22-17	PHY_PC_PCS_TX_DEEMPH_6DB	Tx De-Emphasis at 6 dB. Sets the Tx driver de-emphasis value when pipeP_tx_deemph[1:0] is set to 10b (according to the PIPE3 specification). This bus is provided for completeness and as a second potential launch amplitude.
16-11	Reserved	Reserved
10-5	PHY_PC_PCS_TX_DEEMPH_3P5DB	Tx De-Emphasis at 3.5 dB. Sets the Tx driver de-emphasis value when pipeP_tx_deemph[1:0] is set to 10b (according to the PIPE3 specification). Can be used for Rx eye compliance.
4-0	PHY_PC_LOS_LEVEL	Loss-of-Signal Detector Sensitivity Level Control. Sets the LOS detection threshold level. This signal must be set to 0x9.

Figure 10-42. USB_PHY_CTL4 Register

31	30	29	28	27	26	25	24	23	22	21	20	19	18	17	16
PHY_SSC_EN	PHY_REF_USE_PAD	PHY_REF_SSP_EN	PHY_MPLL_REFSSC_CLK_EN	PHY_FSEL						PHY_RETENABLEN	PHY_REFCLKSEL		PHY_COMMONONN	Rsvd	PHY_OTG_VBUSVLDEXTSEL
R/W-1	R/W-0	R/W-0	R/W-0	R/W-100111						R/W-1	R/W-10		R/W-0	R-0	R/W-0

15	14	13	12	11	10	9	8	7	6	5	4	3	2	1	0
PHY_OTG_OTGDISABLE	PHY_PC_TX_VBOOST_LVL			PHY_PC_LANE0_TX_TERM_OFFSET					Reserved						
R/W-1	R/W-100			R/W-00000					R-0						

Legend: R = Read only; R/W = Read/Write, *-n* = value after reset

Table 10-62. USB_PHY_CTL4 Register Field Descriptions

Bit	Field	Description
31	PHY_SSC_EN	Spread Spectrum Enable. Enables spread spectrum clock production (0.5% down-spread at ~31.5 KHz) in the USB3.0 PHY. If the reference clock already has spread spectrum applied, ssc_en must be deasserted.
30	PHY_REF_USE_PAD	Select Reference Clock Connected to ref_pad_clk_{p,m}. When asserted, selects the external ref_pad_clk_{p,m} inputs as the reference clock source. When deasserted, ref_alt_clk_{p,m} are selected for an on-chip reference clock source.
29	PHY_REF_SSP_EN	Reference Clock Enables for SS function. Enables the reference clock to the prescaler. The ref_ssp_en signal must remain deasserted until the reference clock is running at the appropriate frequency, at which point ref_ssp_en can be asserted. For lower power states, ref_ssp_en can also be de asserted.
28	PHY_MPLL_REFSSC_CLK_EN	Double-Word Clock Enable. Enables/disables the mpll_refssc_clk signal. To prevent clock glitch, it must be changed when the PHY is inactive.
27-22	PHY_FSEL	Frequency Selection. Selects the reference clock frequency used for both SS and HS operations. The value for fsel combined with the other clock and enable signals will determine the clock frequency used for SS and HS operations and if a shared or separate reference clock will be used.
21	PHY_RETENABLEN	Lowered Digital Supply Indicator. Indicates that the vp digital power supply has been lowered in Suspend mode. This signal must be deasserted before the digital power supply is lowered. • 1 = Normal operating mode. • 0 = The analog blocks are powered down.

Copyright © 2012–2017, Texas Instruments Incorporated

Table 10-62. USB_PHY_CTL4 Register Field Descriptions (continued)

Bit	Field	Description
20-19	PHY_REFCLKSEL	Reference Clock Select for PLL Block. Selects reference clock source for the HS PLL block. • 11 = HS PLL uses EXTREFCLK as reference. • 10 = HS PLL uses either ref_pad_clk_{p,m} or ref_alt_clk_{p,m} as reference. • x0 = Reserved.
18	PHY_COMMONONN	Common Block Power-Down Control. Controls the power-down signals in the HS Bias and PLL blocks when the USB3.0 PHY is in Suspend or Sleep mode. • 1 = In Suspend or Sleep mode, the HS Bias and PLL blocks are powered down. • 0 = In Suspend or Sleep mode, the HS Bias and PLL blocks remain powered and continue to draw current.
17	Reserved	Reserved
16	PHY_OTG_VBUSVLDEXTSEL	External VBUS Valid Select. Selects the VBUSVLDEXT input or the internal Session Valid comparator to indicate when the VBUS signal on the USB cable is valid. • 1 = VBUSVLDEXT input is used. • 0 = Internal Session Valid comparator is used.
15	PHY_OTG_OTGDISABLE	OTG Block Disable. Powers down the OTG block, which disables the VBUS Valid and Session End comparators. The Session Valid comparator (the output of which is used to enable the pull-up resistor on DP in Device mode) is always on irrespective of the state of otgdisable. If the application does not use the OTG function, setting this signal to high to save power. • 1 = OTG block is powered down. • 0 = OTG block is powered up.
14-12	PHY_PC_TX_VBOOST_LVL	Tx Voltage Boost Level. Sets the boosted transmit launch amplitude (mV_{ppd}). The default setting is intended to set the launch amplitude to approximately 1,008mV_{ppd}. • +1 = results in a +156 mV_{ppd} change in the Tx launch amplitude. • –1 = results in a –156 mV_{ppd} change in the Tx launch amplitude.
11-7	PHY_PC_LANE0_TX_TERM_OFFSET	Transmitter Termination Offset. Enables adjusting the transmitter termination value from the default value of 60 Ω.
6-0	Reserved	Reserved

Figure 10-43. USB_PHY_CTL5 Register

31	30	29	28	27	26	25	24	23	22	21	20	19	18	17	16
Reserved											PHY_REF_CLKDIV2	PHY_MPLL_MULTIPLIER[6:0]			
R-0											R/W-0	R/W +0011001			
15	14	13	12	11	10	9	8	7	6	5	4	3	2	1	0
PHY_MPLL_MULTIPLIER[6:0]			PHY_SSC_REF_CLK_SEL									Rsvd	PHY_SSC_RANGE		
R/W +0011001			R/W-000000000									R-0	R/W-000		

Legend: R = Read only; R/W = Read/Write, -*n* = value after reset

Table 10-63. USB_PHY_CTL5 Register Field Descriptions

Bit	Field	Description
31-21	Reserved	Reserved
20	PHY_REF_CLKDIV2	Input Reference Clock Divider Control. If the input reference clock frequency is greater than 100 MHz, this signal must be asserted. The reference clock frequency is then divided by 2 to keep it in the range required by the MPLL. When this input is asserted, the ref_ana_usb2_clk (if used) frequency will be the reference clock frequency divided by 4.

Copyright © 2012–2017, Texas Instruments Incorporated

Table 10-63. USB_PHY_CTL5 Register Field Descriptions (continued)

Bit	Field	Description
19-13	PHY_MPLL_MULTIPLIER[6:0]	MPLL Frequency Multiplier Control. Multiplies the reference clock to a frequency suitable for intended operating speed.
12-4	PHY_SSC_REF_CLK_SEL	Spread Spectrum Reference Clock Shifting. Enables nonstandard oscillator frequencies to generate targeted MPLL output rates. Input corresponds to frequency-synthesis coefficient. • . ssc_ref_clk_sel[8:6] = modulous – 1 • . ssc_ref_clk_sel[5:0] = 2's complement push amount.
3	Reserved	Reserved
2-0	PHY_SSC_RANGE	Spread Spectrum Clock Range. Selects the range of spread spectrum modulation when ssc_en is asserted and the PHY is spreading the high-speed transmit clocks. Applies a fixed offset to the phase accumulator.

Copyright © 2012–2017, Texas Instruments Incorporated

11 66AK2Hxx Peripheral Information

This chapter covers the various peripherals on the 66AK2Hxx device. Peripheral-specific information, timing diagrams, electrical specifications, and register memory maps are described in this chapter.

11.1 Recommended Clock and Control Signal Transition Behavior

All clocks and control signals ***must*** transition between V_{IH} and V_{IL} (or between V_{IL} and V_{IH}) in a monotonic manner.

11.2 Power Supplies

The following sections describe the proper power-supply sequencing and timing needed to properly power on the 66AK2Hxx. The various power supply rails and their primary functions are listed in Table 11-1.

Table 11-1. Power Supply Rails on the 66AK2Hxx

Name	Primary Function	Voltage	Notes
AVDDAx	Core PLL, DDR3 DLL supply voltage	1.8 V	Core PLL, DDR3 DLL supply
CVDD	SmartReflex DSP core supply voltage	0.8 – 1.1 V	DSP variable core supply
CVDD1	DSP core fixed supply voltage	0.95 V	DSP Core fixed supply
CVDDT1	ARM core fixed supply voltage	0.95 V	ARM core fixed supply
DVDD15	DDR3A, DDR3B I/O power supply voltage	1.35 V / 1.5 V	DDR3A, DDR3B I/O power supply
DVDD18	1.8-V I/O power supply voltage	1.8 V	1.8-V I/O power supply
DVDD33	USB 3.3-V IO supply	3.3 V	USB high voltage supply
VDDAHV	SerDes I/O power supply voltage	1.8 V	SerDes I/O power supply
VDDALV	SerDes analog power supply voltage	0.85 V	SerDes analog supply
VDDUSB	USB LV PHY power supply voltage	0.85 V	USB LV PHY supply
VP, VPTX	Filtered 0.85-V supply voltage	0.85 V	Filtered 0.85-V USB supply
VSS	Ground	GND	Ground

11.2.1 Power-Up Sequencing

This section defines the requirements for a power-up sequencing from a power-on reset condition. There are two acceptable power sequences for the device.

The first sequence stipulates the **core voltages starting before the IO voltages** as shown below.

1. CVDD
2. CVDD1, CVDDT1, VDDAHV, AVDDAx, DVDD18
3. DVDD15
4. VDDALV, VDDUSB, VP, VPTX
5. DVDD33

The second sequence provides compatibility with other TI processors with the **IO voltage starting before the core voltages** as shown below.

1. VDDAHV, AVDDAx, DVDD18
2. CVDD
3. CVDD1, CVDDT1
4. DVDD15
5. VDDALV, VDDUSB, VP, VPTX
6. DVDD33

Copyright © 2012–2017, Texas Instruments Incorporated

The clock input buffers for SYSCLK, ARMCLK, ALTCORECLK, DDR3ACLK, DDR3BCLK, PASSCLK, and SRIOSGMIICLK use CVDD as a supply voltage. These clock inputs are not failsafe and must be held in a high-impedance state until CVDD is at a valid voltage level. Driving these clock inputs high before CVDD is valid could cause damage to the device. Once CVDD is valid, it is acceptable that the P and N legs of these clocks may be held in a static state (either high and low or low and high) until a valid clock frequency is needed at that input. To avoid internal oscillation, the clock inputs should be removed from the high impedance state shortly after CVDD is present.

If a clock input is not used, it must be held in a static state. To accomplish this, the N leg should be pulled to ground through a 1-kΩ resistor. The P leg should be tied to CVDD to ensure it will not have any voltage present until CVDD is active. Connections to the IO cells powered by DVDD18 and DVDD15 are not failsafe and should not be driven high before these voltages are active. Driving these IO cells high before DVDD18 or DVDD15 are valid could cause damage to the device.

The device initialization is divided into two phases. The first phase consists of the time period from the activation of the first power supply until the point at which all supplies are active and at a valid voltage level. Either of the sequencing scenarios described above can be implemented during this phase. The figures below show both the core-before-IO voltage sequence and the IO-before-core voltage sequence. POR must be held low for the entire power stabilization phase.

This is followed by the device initialization phase. The rising edge of POR followed by the rising edge of RESETFULL triggers the end of the initialization phase, but both must be inactive for the initialization to complete. POR must always go inactive before RESETFULL goes inactive as described below. SYSCLK1 in the following section refers to the clock that is used by the CorePacs. See Figure 11-7 for more details.

11.2.1.1 Core-Before-IO Power Sequencing

The details of the Core-before-IO power sequencing are defined in Table 11-2. Figure 11-1 shows power sequencing and reset control of the 66AK2Hxx. POR may be removed after the power has been stable for the required 100 µsec. RESETFULL must be held low for a period (see item 9 in Figure 11-1) after the rising edge of POR, but may be held low for longer periods if necessary. The configuration bits shared with the GPIO pins will be latched on the rising edge of RESETFULL and must meet the setup and hold times specified. SYSCLK1 must always be active before POR can be removed.

NOTE

TI recommends a maximum of 80 ms between one power rail being valid and the next power rail in the sequence starting to ramp.

Table 11-2. Core-Before-IO Power Sequencing

ITEM	SYSTEM STATE
1	**Begin Power Stabilization Phase** • CVDD (core AVS) ramps up. • POR must be held low through the power stabilization phase. Because POR is low, all the core logic that has asynchronous reset (created from POR) is put into the reset state. • Each supply must ramp monotonically and must reach a stable valid level in 20 ms or less.
2a	• CVDD1 and CVDDT1 (core constant) ramps at the same time or within 80 ms of CVDD. Although ramping CVDD1 simultaneously with CVDD is permitted, the voltage for CVDD1 **must never exceed** CVDD until after CVDD has reached a valid voltage. • The purpose of ramping up the core supplies close to each other is to reduce crowbar current. CVDD1 should trail CVDD as this will ensure that the Word Lines (WLs) in the memories are turned off and there is no current through the memory bit cells. If, however, CVDD1 (core constant) ramps up before CVDD (core AVS), then the worst-case current could be on the order of twice the specified draw of CVDD1. • Each supply must ramp monotonically and must reach a stable valid level in 20 ms or less. • The timing for CVDD1 is based on CVDD valid. CVDD1 and DVDD18/ADDAVH/AVDDAx may be enabled at the same time but do not need to ramp simultaneously. CVDD1 may be valid before or after DVDD18/ADDAVH/AVDDAx are valid, as long as the timing above is met.

Copyright © 2012–2017, Texas Instruments Incorporated

Table 11-2. Core-Before-IO Power Sequencing (continued)

ITEM	SYSTEM STATE
2b	• VDDAHV, AVDDAx and DVDD18 ramp at the same time or shortly following CVDD. DVDD18 must be enabled within 80 ms of CVDD valid and must ramp monotonically and reach a stable level in 20ms or less. **This results in no more than 100 ms from the time when CVDD is valid to the time when DVDD18 is valid.** • Each supply must ramp monotonically and must reach a stable valid level in 20 ms or less. • The timing for DVDD18/ADDAVH/AVDDAx is based on CVDD valid. DVDD18/ADDAVH/AVDDAx and CVDD1and CVDDT1 may be enabled at the same time but do not need to ramp simultaneously. DVDD18/ADDAVH/AVDDAx may be valid before or after CVDD1 and CVDDT1 are valid, as long as the timing above is met.
2c	• Once CVDD is valid, the clock drivers can be enabled. Although the clock inputs are not necessary at this time, they should either be driven with a valid clock or be held in a static state with one leg high and one leg low.
2d	• The DDR3ACLK, DDR3BCLK and SYSCLK1 may begin to toggle anytime between when CVDD is at a valid level and the setup time before $\overline{\text{POR}}$ goes high specified by item 7.
3	• DVDD15 can ramp up within 80ms of when DVDD18 is valid. • $\overline{\text{RESETSTAT}}$ is driven low once the DVDD18 supply is available. • All LVCMOS input and bidirectional pins must not be driven or pulled high until DVDD18 is present. Driving an input or bidirectional pin before DVDD18 is valid could cause damage to the device. • Each supply must ramp monotonically and must reach a stable valid level in 20 ms or less.
3a	• $\overline{\text{RESET}}$ may be driven high any time after DVDD18 is at a valid level. $\overline{\text{RESET}}$ must be high before $\overline{\text{POR}}$ is driven high.
4	• VDDALV, VDDUSB, VP and VPTX ramp up within 80ms of when DVDD15 is valid. • Each supply must ramp monotonically and must reach a stable valid level in 20 ms or less.
5	• DVDD33 supply is ramped up within 80 ms of when VDDALV, VDDUSB, VP and VPTX are valid. • Each supply must ramp monotonically and must reach a stable valid level in 20 ms or less.
6	• $\overline{\text{POR}}$ must continue to remain low for at least 100 μs after all power rails have stabilized. **End power stabilization phase**
7	• Device initialization requires 500 SYSCLK1 periods after the Power Stabilization Phase. The maximum clock period is 33.33 nsec, so a delay of an additional 16 μs is required before a rising edge of $\overline{\text{POR}}$. The clock must be active during the entire 16 μs.
8	• $\overline{\text{RESETFULL}}$ must be held low for at least 24 transitions of the SYSCLK1 after $\overline{\text{POR}}$ has stabilized at a high level.
9	• The rising edge of the $\overline{\text{RESETFULL}}$ will remove the reset to the eFuse farm allowing the scan to begin. • Once device initialization and the eFuse farm scan are complete, the $\overline{\text{RESETSTAT}}$ signal is driven high. This delay will be 10000 to 50000 clock cycles. **End device initialization phase**
10	• GPIO configuration bits must be valid for at least 12 transitions of the SYSCLK1 before the rising edge of $\overline{\text{RESETFULL}}$.
11	• GPIO configuration bits must be held valid for at least 12 transitions of the SYSCLK1 after the rising edge of $\overline{\text{RESETFULL}}$.

Copyright © 2012–2017, Texas Instruments Incorporated

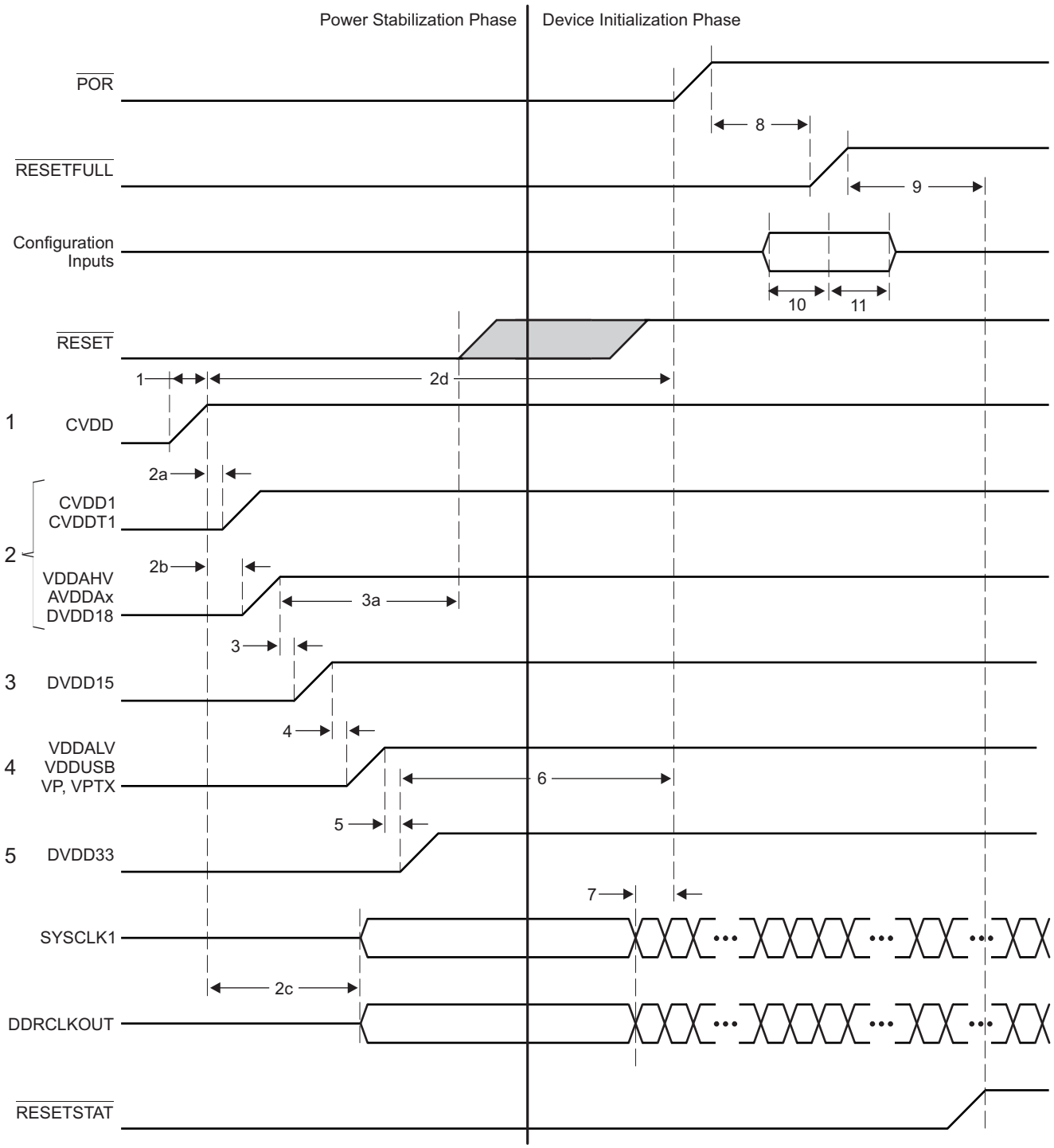

Figure 11-1. Core-Before-IO Power Sequencing

Copyright © 2012–2017, Texas Instruments Incorporated

11.2.1.2 IO-Before-Core Power Sequencing

The timing diagram for IO-before-core power sequencing is shown in Figure 11-2 and defined in Table 11-3.

NOTE

TI recommends a maximum of 100 ms between one power rail being valid, and the next power rail in the sequence starting to ramp.

Table 11-3. IO-Before-Core Power Sequencing

ITEM	SYSTEM STATE
1	**Begin Power Stabilization Phase** • VDDAHV, AVDDAx and DVDD18 ramp up. • $\overline{\text{POR}}$ must be held low through the power stabilization phase. Because $\overline{\text{POR}}$ is low, all the core logic that has asynchronous reset (created from $\overline{\text{POR}}$) is put into the reset state. • Each supply must ramp monotonically and must reach a stable valid level in 20 ms or less.
2	• CVDD (core AVS) ramps within 80 ms from the time ADDAHV, AVDDAx and DVDD18 are valid. • Each supply must ramp monotonically and must reach a stable valid level in 20 ms or less.
2a	• $\overline{\text{RESET}}$ may be driven high any time after DVDD18 is at a valid level. must be high before $\overline{\text{POR}}$ is driven high.
3	• CVDD1 and CVDDT1 (core constant) ramp at the same time or within 80 ms following CVDD. Although ramping CVDD1and CVDDT1 simultaneously with CVDD is permitted, the voltage for CVDD1 and CVDDT1 **must never exceed** CVDD until after CVDD has reached a valid voltage. • The purpose of ramping up the core supplies close to each other is to reduce crowbar current. CVDD1 and CVDDT1 should trail CVDD as this will ensure that the Word Lines (WLs) in the memories are turned off and there is no current through the memory bit cells. If, however, CVDD1 and CVDDT1 (core constant) ramp up before CVDD (core AVS), then the worst-case current could be on the order of twice the specified draw of CVDD1 and CVDDT1. • Each supply must ramp monotonically and must reach a stable valid level in 20 ms or less.
3a	• Once CVDD is valid, the clock drivers can be enabled. Although the clock inputs are not necessary at this time, they should either be driven with a valid clock or held in a static state.
3b	• The DDR3ACLK, DDR3BCLK and SYSCLK1 may begin to toggle anytime between when CVDD is at a valid level and the setup time before $\overline{\text{POR}}$ goes high specified by item 8.
4	• DVDD15 can ramp up within 80 ms of when CVDD1 is valid. • $\overline{\text{RESETSTAT}}$ is driven low once the DVDD18 supply is available. • All LVCMOS input and bidirectional pins must not be driven or pulled high until DVDD18 is present. Driving an input or bidirectional pin before DVDD18 is valid could cause damage to the device. • Each supply must ramp monotonically and must reach a stable valid level in 20 ms or less.
5	• VDDALV, VDDUSB, VP and VPTX should ramp up within 80 ms of when DVDD15 is valid. • Each supply must ramp monotonically and must reach a stable valid level in 20 ms or less.
6	• DVDD33 supply is ramped up within 80 ms of when VDDALV, VDDUSB, VP and VPTX are valid. • Each supply must ramp monotonically and must reach a stable valid level in 20 ms or less.
7	• $\overline{\text{POR}}$ must continue to remain low for at least 100 μs after all power rails have stabilized. **End power stabilization phase**
8	• Device initialization requires 500 SYSCLK1 periods after the Power Stabilization Phase. The maximum clock period is 33.33 nsec, so a delay of an additional 16 μs is required before a rising edge of $\overline{\text{POR}}$. The clock must be active during the entire 16 μs.
9	• $\overline{\text{RESETFULL}}$ must be held low for at least 24 transitions of the SYSCLK1 after $\overline{\text{POR}}$ has stabilized at a high level.
10	• The rising edge of the $\overline{\text{RESETFULL}}$ will remove the reset to the efuse farm allowing the scan to begin. • Once device initialization and the efuse farm scan are complete, the $\overline{\text{RESETSTAT}}$ signal is driven high. This delay will be 10000 to 50000 clock cycles. **End device initialization phase**
11	• GPIO configuration bits must be valid for at least 12 transitions of the SYSCLK1 before the rising edge of $\overline{\text{RESETFULL}}$.
12	• GPIO configuration bits must be held valid for at least 12 transitions of the SYSCLK1 after the rising edge of $\overline{\text{RESETFULL}}$.

Copyright © 2012–2017, Texas Instruments Incorporated

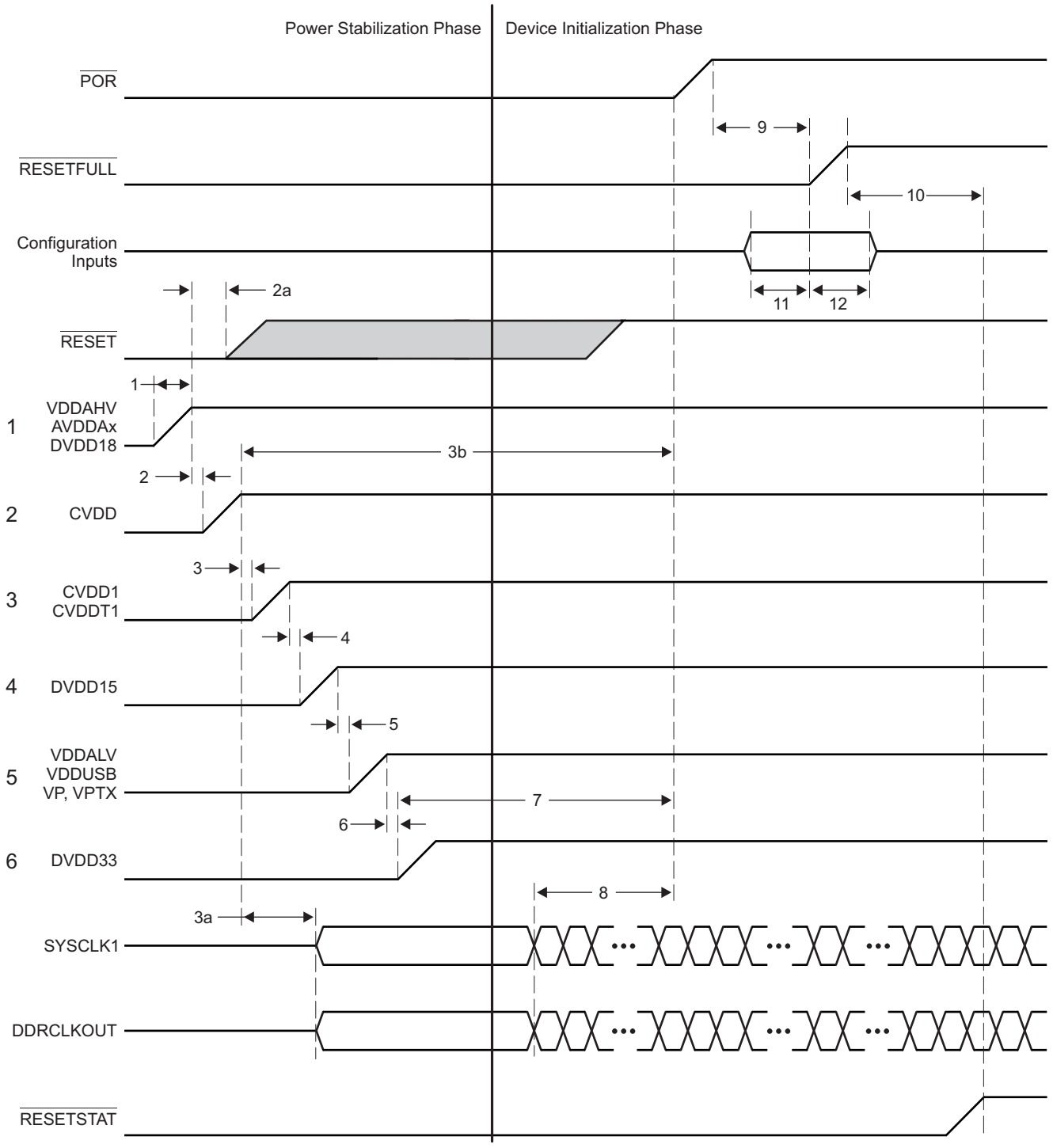

Figure 11-2. IO-Before-Core Power Sequencing

Copyright © 2012–2017, Texas Instruments Incorporated

11.2.1.3 Prolonged Resets

Holding the device in $\overline{\text{POR}}$, $\overline{\text{RESETFULL}}$, or $\overline{\text{RESET}}$ for long periods of time may affect the long-term reliability of the part (due to an elevated voltage condition that can stress the part). The device should not be held in a reset for times exceeding one hour at a time and no more than 5% of the total lifetime for which the device is powered-up. Exceeding these limits will cause a gradual reduction in the reliability of the part. This can be avoided by allowing the device to boot and then configuring it to enter a hibernation state soon after power is applied. This will satisfy the reset requirement while limiting the power consumption of the device.

11.2.1.4 Clocking During Power Sequencing

Some of the clock inputs are required to be present for the device to initialize correctly, but behavior of many of the clocks is contingent on the state of the boot configuration pins. Table 11-4 describes the clock sequencing and the conditions that affect clock operation. All clock drivers should be in a high-impedance state until CVDD is at a valid level and that all clock inputs be either active or in a static state with one leg pulled to ground and the other connected to CVDD.

Table 11-4. Clock Sequencing

CLOCK	CONDITION	SEQUENCING
DDR3ACLK	None	Must be present 16 µsec before $\overline{\text{POR}}$ transitions high.
DDR3BCLK	None	Must be present 16 µsec before $\overline{\text{POR}}$ transitions high.
SYSCLK	CORECLKSEL = 0	SYSCLK is used to clock the core PLL. It must be present 16 µsec before $\overline{\text{POR}}$ transitions high.
	CORECLKSEL = 1	Reserved.
ALTCORECLK	CORECLKSEL = 0	ALTCORECLK is not used and should be tied to a static state.
	CORECLKSEL = 1	ALTCORECLK is used to clock the core PLL. It must be present 16 µsec before $\overline{\text{POR}}$ transitions high.
PASSCLK	PASSCLKSEL = 0	PASSCLK is not used and should be tied to a static state.
	PASSCLKSEL = 1	PASSCLK is used as a source for the PASS PLL. It must be present before the PASS PLL is removed from reset and programmed.
SRIOSGMIICLK	An SGMII port will be used.	SRIOSGMIICLK must be present 16 µsec before $\overline{\text{POR}}$ transitions high.
	SGMII will not be used. SRIO will be used as a boot device.	SRIOSGMIICLK must be present 16 µsec before $\overline{\text{POR}}$ transitions high.
	SGMII will not be used. SRIO will be used after boot.	SRIOSGMIICLK is used as a source to the SRIO SerDes PLL. It must be present before the SRIO is removed from reset and programmed.
	SGMII will not be used. SRIO will not be used.	SRIOSGMIICLK is not used and should be tied to a static state.
PCIECLK	PCIE will be used as a boot device.	PCIECLK must be present 16 µsec before $\overline{\text{POR}}$ transitions high.
	PCIE will be used after boot.	PCIECLK is used as a source to the PCIE SerDes PLL. It must be present before the PCIe is removed from reset and programmed.
	PCIE will not be used.	PCIECLK is not used and should be tied to a static state.
HYPCLK	HyperLink will be used as a boot device.	HYPCLK must be present 16 µsec before $\overline{\text{POR}}$ transitions high.
	HyperLink will be used after boot.	HYPCLK is used as a source to the HyperLink SerDes PLL. It must be present before the HyperLink is removed from reset and programmed.
	HyperLink will not be used.	HYPCLK is not used and should be tied to a static state.

Copyright © 2012–2017, Texas Instruments Incorporated

11.2.2 Power-Down Sequence

The power-down sequence is the exact reverse of the power-up sequence described above. The goal is to prevent an excessive amount of static current and to prevent overstress of the device. A power-good circuit that monitors all the supplies for the device should be used in all designs. If a catastrophic power supply failure occurs on any voltage rail, $\overline{\text{POR}}$ should transition to low to prevent over-current conditions that could possibly impact device reliability.

A system power monitoring solution is needed to shut down power to the board if a power supply fails. Long-term exposure to an environment in which one of the power supply voltages is no longer present will affect the reliability of the device. Holding the device in reset is not an acceptable solution because prolonged periods of time with an active reset can affect long term reliability.

11.2.3 Power Supply Decoupling and Bulk Capacitor

To properly decouple the supply planes on the PCB from system noise, decoupling and bulk capacitors are required. Bulk capacitors are used to minimize the effects of low-frequency current transients and decoupling or bypass capacitors are used to minimize higher frequency noise. For recommendations on selection of power supply decoupling and bulk capacitors see *Hardware Design Guide for KeyStone II Devices*.

11.2.4 SmartReflex

Increasing the device complexity increases its power consumption. With higher clock rates and increased performance comes an inevitable penalty: increasing leakage currents. Leakage currents are present in any powered circuit, independent of clock rates and usage scenarios. This static power consumption is mainly determined by transistor type and process technology. Higher clock rates also increase dynamic power, which is the power used when transistors switch. The dynamic power depends mainly on a specific usage scenario, clock rates, and I/O activity.

Texas Instruments SmartReflex technology is used to decrease both static and dynamic power consumption while maintaining the device performance. SmartReflex in the 66AK2Hxx device is a feature that allows the core voltage to be optimized based on the process corner of the device. This requires a voltage regulator for each 66AK2Hxx device.

To help maximize performance and minimize power consumption of the device, SmartReflex is required to be implemented. The voltage selection can be accomplished using 4 VCNTL pins or 6 VCNTL pins (depending on power supply device being used), which are used to select the output voltage of the core voltage regulator.

For information on implementation of SmartReflex, see *Power Consumption Summary for KeyStone TCI66x Devices* and *Hardware Design Guide for KeyStone II Devices*.

SmartReflex switching characteristics are shown in Table 11-5.

Table 11-5. SmartReflex 4-Pin 6-bit VID Interface Switching Characteristics

(see Figure 11-3)

NO.	PARAMETER		MIN	MAX	UNIT
1	td(VCNTL[4:2]-VCNTL[5])	Delay time – VCNTL[4:2] valid after VCNTL[5] low		300.00	ns
2	toh(VCNTL[5]-VCNTL[4:2])	Output hold time – VCNTL[4:2] valid after VCNTL[5]	0.07	172020C (1)	ms
3	td(VCNTL[4:2]-VCNTL[5])	Delay time – VCNTL[4:2] valid after VCNTL[5] high		300.00	ns
4	toh(VCNTL[5]-VCNTL[2:0)	Output hold time – VCNTL[4:2] valid after VCNTL[5] high	0.07	172020C	ms

(1) C = 1/SYSCLK1 frequency, in ms (see Figure 11-9)

Copyright © 2012–2017, Texas Instruments Incorporated

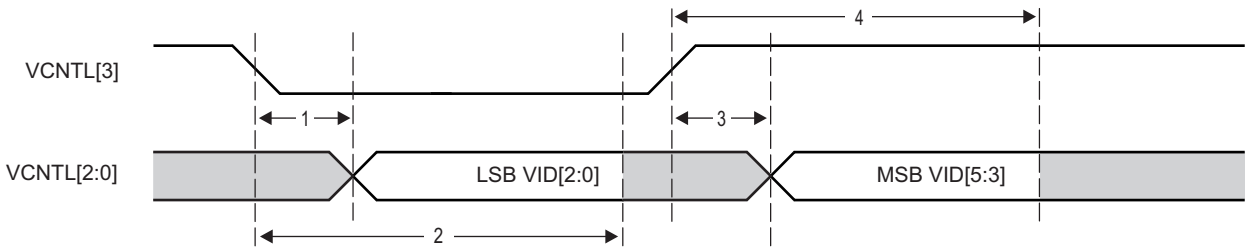

Figure 11-3. SmartReflex 4-Pin 6-Bit VID Interface Timing

11.3 Power Sleep Controller (PSC)

The Power Sleep Controller (PSC) includes a Global Power Sleep Controller (GPSC) and a number of Local Power Sleep Controllers (LPSC) that control overall device power by turning off unused power domains and gating off clocks to individual peripherals and modules. The PSC provides the user with an interface to control several important power and clock operations.

For information on the Power Sleep Controller, see the *KeyStone Architecture Power Sleep Controller (PSC) User's Guide*.

11.3.1 Power Domains

The device has several power domains that can be turned on for operation or off to minimize power dissipation. The Global Power Sleep Controller (GPSC) is used to control the power gating of various power domains.

Table 11-6 shows the 66AK2Hxx power domains.

Table 11-6. 66AK2Hx Power Domains

DOMAIN	BLOCK(S)	NOTE	POWER CONNECTION
0	Most peripheral logic (BOOTCFG, EMIF16, I^2C, INTC, GPIO, USB)	Cannot be disabled	Always on
1	Per-core TETB and system TETB	RAMs can be powered down	Software control
2	Network Coprocessor	Logic can be powered down	Software control
3	PCIe	Logic can be powered down	Software control
4	SRIO	Logic can be powered down	Software control
5	HyperLink0	Logic can be powered down	Software control
6	Reserved		
7	MSMC RAM	MSMC RAM can be powered down	Software control
8	C66x Core 0, L1/L2 RAMs	L2 RAMs can sleep	Software control via C66x CorePac. For details, see the *TMS320C66x DSP CorePac User's Guide*.
9	C66x Core 1, L1/L2 RAMs	L2 RAMs can sleep	
10	C66x Core 2, L1/L2 RAMs	L2 RAMs can sleep	
11	C66x Core 3, L1/L2 RAMs	L2 RAMs can sleep	
12	C66x Core 4, L1/L2 RAMs (66AK2H12/14 only)	L2 RAMs can sleep	
13	C66x Core 5, L1/L2 RAMs (66AK2H12/14 only)	L2 RAMs can sleep	
14	C66x Core 6, L1/L2 RAMs (66AK2H12/14 only)	L2 RAMs can sleep	
15	C66x Core 7, L1/L2 RAMs (66AK2H12/14 only)	L2 RAMs can sleep	
16	EMIF(DDR3A, DDR3B)	Logic can be powered down	Software control
17	Reserved		
18	Reserved		

Copyright © 2012–2017, Texas Instruments Incorporated

Table 11-6. 66AK2Hx Power Domains (continued)

DOMAIN	BLOCK(S)	NOTE	POWER CONNECTION
19	Reserved		
20	Reserved		
21	Reserved		
22	Reserved		
23	Reserved		
24	Reserved		
25	Reserved		
26	Reserved		
27	Reserved		
28	HyperLink1	Logic can be powered down	Software control
29	10GbE (66AK2H14 only)	Logic can be powered down	Software control
30	ARM Smart Reflex	Logic can be powered down	Software control
31	ARM CorePac	Logic can be powered down	Software control

11.3.2 Clock Domains

Clock gating to each logic block is managed by the Local Power Sleep Controllers (LPSCs) of each module. For modules with a dedicated clock or multiple clocks, the LPSC communicates with the PLL controller to enable and disable the clocks of that module at the source. For modules that share a clock with other modules, the LPSC controls the clock gating logic for each module.

Table 11-7 shows the 66AK2Hxx clock domains.

Table 11-7. Clock Domains

LPSC NUMBER	MODULE(S)	NOTES
0	Shared LPSC for all peripherals other than those listed in this table	Always on
1	Reserved	
2	USB	Software control
3	EMIF16 and SPI	Software control
4	Reserved	
5	Debug subsystem and tracers	Software control
6	Reserved	Always on
7	Packet Accelerator	Software control
8	Ethernet SGMIIs	Software control
9	Security Accelerator	Software control
10	PCIe	Software control
11	SRIO	Software control
12	HyperLink0	Software control
13	SmartReflex	Always on
14	MSMC RAM	Software control
15	C66x CorePac0	Always on
16	C66x CorePac1	Software control
17	C66x CorePac2	Software control
18	C66x CorePac3	Software control
19	C66x CorePac4 (66AK2H12/14 only)	Software control
20	C66x CorePac5 (66AK2H12/14 only)	Software control
21	C66x CorePac6 (66AK2H12/14 only)	Software control
22	C66x CorePac7 (66AK2H12/14 only)	Software control
23	DDR3A EMIF	Software control

Copyright © 2012–2017, Texas Instruments Incorporated

Table 11-7. Clock Domains (continued)

LPSC NUMBER	MODULE(S)	NOTES
24	DDR3B EMIF	Software control
25	Reserved	
26	Reserved	
27	Reserved	
28	Reserved	
29	Reserved	
30	Reserved	
31	Reserved	
32	Reserved	
33	Reserved	
34	Reserved	
35	Reserved	
36	Reserved	
37	Reserved	
38	Reserved	
39	Reserved	
40	Reserved	
41	Reserved	
42	Reserved	
43	Reserved	
44	Reserved	
45	Reserved	
46	Reserved	
47	Reserved	
48	Reserved	
49	Hyperlink1	Software control
50	10GbE (66AK2H14 only)	Software control
51	ARM Smart Reflex	Software control
52	ARM CorePac	Software control
No LPSC	Bootcfg, PSC, and PLL Controller	These modules do not use LPSC

11.3.3 PSC Register Memory Map

Table 11-8 shows the PSC Register memory map.

Table 11-8. PSC Register Memory Map

OFFSET	REGISTER	DESCRIPTION
0x000	PID	Peripheral Identification Register
0x004 – 0x010	Reserved	Reserved
0x014	VCNTLID	Voltage Control Identification Register
0x018 – 0x11C	Reserved	Reserved
0x120	PTCMD	Power Domain Transition Command Register
0x124	Reserved	Reserved
0x128	PTSTAT	Power Domain Transition Status Register
0x12C – 0x1FC	Reserved	Reserved
0x200	PDSTAT0	Power Domain Status Register 0
0x204	PDSTAT1	Power Domain Status Register 1
0x208	PDSTAT2	Power Domain Status Register 2

Copyright © 2012–2017, Texas Instruments Incorporated

Table 11-8. PSC Register Memory Map (continued)

OFFSET	REGISTER	DESCRIPTION
0x20C	PDSTAT3	Power Domain Status Register 3
0x210	PDSTAT4	Power Domain Status Register 4
0x214	PDSTAT5	Power Domain Status Register 5
0x218	PDSTAT6	Power Domain Status Register 6
0x21C	PDSTAT7	Power Domain Status Register 7
0x220	PDSTAT8	Power Domain Status Register 8
0x224	PDSTAT9	Power Domain Status Register 9
0x228	PDSTAT10	Power Domain Status Register 10
0x22C	PDSTAT11	Power Domain Status Register 11
0x230	PDSTAT12	Power Domain Status Register 12
0x234	PDSTAT13	Power Domain Status Register 13
0x238	PDSTAT14	Power Domain Status Register 14
0x23C	PDSTAT15	Power Domain Status Register 15
0x240	PDSTAT16	Power Domain Status Register 16
0x244	PDSTAT17	Power Domain Status Register 17
0x248	PDSTAT18	Power Domain Status Register 18
0x24C	PDSTAT19	Power Domain Status Register 19
0x250	PDSTAT20	Power Domain Status Register 20
0x254	PDSTAT21	Power Domain Status Register 21
0x258	PDSTAT22	Power Domain Status Register 22
0x25C	PDSTAT23	Power Domain Status Register 23
0x260	PDSTAT24	Power Domain Status Register 24
0x264	PDSTAT25	Power Domain Status Register 25
0x268	PDSTAT26	Power Domain Status Register 26
0x26C	PDSTAT27	Power Domain Status Register 27
0x270	PDSTAT28	Power Domain Status Register 28
0x274	PDSTAT29	Power Domain Status Register 29
0x278	PDSTAT30	Power Domain Status Register 30
0x27C	PDSTAT31	Power Domain Status Register 31
0x27C – 0x2FC	Reserved	Reserved
0x300	PDCTL0	Power Domain Control Register 0
0x304	PDCTL1	Power Domain Control Register 1
0x308	PDCTL2	Power Domain Control Register 2
0x30C	PDCTL3	Power Domain Control Register 3
0x310	PDCTL4	Power Domain Control Register 4
0x314	PDCTL5	Power Domain Control Register 5
0x318	PDCTL6	Power Domain Control Register 6
0x31C	PDCTL7	Power Domain Control Register 7
0x320	PDCTL8	Power Domain Control Register 8
0x324	PDCTL9	Power Domain Control Register 9
0x328	PDCTL10	Power Domain Control Register 10
0x32C	PDCTL11	Power Domain Control Register 11
0x330	PDCTL12	Power Domain Control Register 12
0x334	PDCTL13	Power Domain Control Register 13
0x338	PDCTL14	Power Domain Control Register 14
0x33C	PDCTL15	Power Domain Control Register 15
0x340	PDCTL16	Power Domain Control Register 16

Copyright © 2012–2017, Texas Instruments Incorporated

Table 11-8. PSC Register Memory Map (continued)

OFFSET	REGISTER	DESCRIPTION
0x344	PDCTL17	Power Domain Control Register 17
0x348	PDCTL18	Power Domain Control Register 18
0x34C	PDCTL19	Power Domain Control Register 19
0x350	PDCTL20	Power Domain Control Register 20
0x354	PDCTL21	Power Domain Control Register 21
0x358	PDCTL22	Power Domain Control Register 22
0x35c	PDCTL23	Power Domain Control Register 23
0x360	PDCTL24	Power Domain Control Register 24
0x364	PDCTL25	Power Domain Control Register 25
0x368	PDCTL26	Power Domain Control Register 26
0x36C	PDCTL27	Power Domain Control Register 27
0x370	PDCTL28	Power Domain Control Register 28
0x374	PDCTL29	Power Domain Control Register 29
0x378	PDCTL30	Power Domain Control Register 30
0x37C	PDCTL31	Power Domain Control Register 31
0x380 – 0x7FC	Reserved	Reserved
0x800	MDSTAT0	Module Status Register 0 (never gated)
0x804	MDSTAT1	Module Status Register 1
0x808	MDSTAT2	Module Status Register 2
0x80C	MDSTAT3	Module Status Register 3
0x810	MDSTAT4	Module Status Register 4
0x814	MDSTAT5	Module Status Register 5
0x818	MDSTAT6	Module Status Register 6
0x81C	MDSTAT7	Module Status Register 7
0x820	MDSTAT8	Module Status Register 8
0x824	MDSTAT9	Module Status Register 9
0x828	MDSTAT10	Module Status Register 10
0x82C	MDSTAT11	Module Status Register 11
0x830	MDSTAT12	Module Status Register 12
0x834	MDSTAT13	Module Status Register 13
0x838	MDSTAT14	Module Status Register 14
0x83C	MDSTAT15	Module Status Register 15
0x840	MDSTAT16	Module Status Register 16
0x844	MDSTAT17	Module Status Register 17
0x848	MDSTAT18	Module Status Register 18
0x84C	MDSTAT19	Module Status Register 19
0x850	MDSTAT20	Module Status Register 20
0x854	MDSTAT21	Module Status Register 21
0x858	MDSTAT22	Module Status Register 22
0x85C	MDSTAT23	Module Status Register 23
0x860	MDSTAT24	Module Status Register 24
0x864	MDSTAT25	Module Status Register 25
0x868	MDSTAT26	Module Status Register 26
0x86C	MDSTAT27	Module Status Register 27
0x870	MDSTAT28	Module Status Register 28
0x874	MDSTAT29	Module Status Register 29
0x878	MDSTAT30	Module Status Register 30

Copyright © 2012–2017, Texas Instruments Incorporated

Table 11-8. PSC Register Memory Map (continued)

OFFSET	REGISTER	DESCRIPTION
0x87C	MDSTAT31	Module Status Register31
0x880	MDSTAT32	Module Status Register 32
0x884	MDSTAT33	Module Status Register 33
0x888	MDSTAT34	Module Status Register 34
0x88C	MDSTAT35	Module Status Register 35
0x890	MDSTAT36	Module Status Register 36
0x894	MDSTAT37	Module Status Register 37
0x898	MDSTAT38	Module Status Register 38
0x89C	MDSTAT39	Module Status Register 39
0x8A0	MDSTAT40	Module Status Register 40
0x8A4	MDSTAT41	Module Status Register 41
0x8A8	MDSTAT42	Module Status Register 42
0x8AC	MDSTAT43	Module Status Register 43
0x8B0	MDSTAT44	Module Status Register 44
0x8B4	MDSTAT45	Module Status Register 45
0x8B8	MDSTAT46	Module Status Register 46
0x8BC	MDSTAT47	Module Status Register 47
0x8C0	MDSTAT48	Module Status Register 48
0x8C4	MDSTAT49	Module Status Register 49
0x8C8	MDSTAT50	Module Status Register 50
0x8CC	MDSTAT51	Module Status Register 51
0x8D0	MDSTAT52	Module Status Register 52
0x8D4 – 0x9FC	Reserved	Reserved
0xA00	MDCTL0	Module Control Register 0 (never gated)
0xA04	MDCTL1	Module Control Register 1
0xA08	MDCTL2	Module Control Register 2
0xA0C	MDCTL3	Module Control Register 3
0xA10	MDCTL4	Module Control Register 4
0xA14	MDCTL5	Module Control Register 5
0xA18	MDCTL6	Module Control Register 6
0xA1C	MDCTL7	Module Control Register 7
0xA20	MDCTL8	Module Control Register 8
0xA24	MDCTL9	Module Control Register 9
0xA28	MDCTL10	Module Control Register 10
0xA2C	MDCTL11	Module Control Register 11
0xA30	MDCTL12	Module Control Register 12
0xA34	MDCTL13	Module Control Register 13
0xA38	MDCTL14	Module Control Register 14
0xA3C	MDCTL15	Module Control Register 15
0xA40	MDCTL16	Module Control Register 16
0xA44	MDCTL17	Module Control Register 17
0xA48	MDCTL18	Module Control Register 18
0xA4C	MDCTL19	Module Control Register 19
0xA50	MDCTL20	Module Control Register 20
0xA54	MDCTL21	Module Control Register 21
0xA58	MDCTL22	Module Control Register 22
0xA5C	MDCTL23	Module Control Register 23

Copyright © 2012–2017, Texas Instruments Incorporated

Table 11-8. PSC Register Memory Map (continued)

OFFSET	REGISTER	DESCRIPTION
0xA60	MDCTL24	Module Control Register 24
0xA64	MDCTL25	Module Control Register 25
0xA68	MDCTL26	Module Control Register 26
0xA6C	MDCTL27	Module Control Register 27
0xA70	MDCTL28	Module Control Register 28
0xA74	MDCTL29	Module Control Register 29
0xA78	MDCTL30	Module Control Register 30
0xA7C	MDCTL31	Module Control Register31
0xA80	MDCTL32	Module Control Register 32
0xA84	MDCTL33	Module Control Register 33
0xA88	MDCTL34	Module Control Register 34
0xA8C	MDCTL35	Module Control Register 35
0xA90	MDCTL36	Module Control Register 36
0xA94	MDCTL37	Module Control Register 37
0xA98	MDCTL38	Module Control Register 38
0xA9C	MDCTL39	Module Control Register 39
0xAA0	MDCTL40	Module Control Register 40
0xAA4	MDCTL41	Module Control Register 41
0xAA8	MDCTL42	Module Control Register 42
0xAAC	MDCTL43	Module Control Register 43
0xAB0	MDCTL44	Module Control Register 44
0xAB4	MDCTL45	Module Control Register 45
0xAB8	MDCTL46	Module Control Register 46
0xABC	MDCTL47	Module Control Register 47
0xAC0	MDCTL48	Module Control Register 48
0xAC4	MDCTL49	Module Control Register 49
0xAC8	MDCTL50	Module Control Register 50
0xACC	MDCTL51	Module Control Register 51
0xAD0	MDCTL52	Module Control Register 52
0xAD4 – 0xFFC	Reserved	Reserved

11.4 Reset Controller

The reset controller detects the different type of resets supported on the 66AK2Hxx device and manages the distribution of those resets throughout the device. The device has the following types of resets:

- Power-on reset
- Hard reset
- Soft reset
- Local reset

Table 11-9 explains further the types of reset, the reset initiator, and the effects of each reset on the device. For more information on the effects of each reset on the PLL controllers and their clocks, see Section 11.4.8.

Table 11-9. Reset Types

TYPE	INITIATOR	EFFECT(S)
Power-on reset	$\overline{\text{POR}}$ pin $\overline{\text{RESETFULL}}$ pin	Resets the entire chip including the test and emulation logic. The device configuration pins are latched only during power-on reset.

Copyright © 2012–2017, Texas Instruments Incorporated

Table 11-9. Reset Types (continued)

TYPE	INITIATOR	EFFECT(S)
Hard reset	$\overline{\text{RESET}}$ pin PLLCTL Register (RSCTRL)(1) Watchdog timers Emulation	Hard reset resets everything except for test, emulation logic, and reset isolation modules. This reset is different from power-on reset in that the PLL Controller assumes power and clocks are stable when a hard reset is asserted. The device configurations pins are not relatched. Emulation-initiated reset is always a hard reset. By default, these initiators are configured as hard reset, but can be configured (except emulation) as a soft reset in the RSCFG Register of the PLL Controller. Contents of the DDR3 SDRAM memory can be retained during a hard reset if the SDRAM is placed in self-refresh mode.
Soft reset	$\overline{\text{RESET}}$ pin PLLCTL Register (RSCTRL) Watchdog timers	Soft reset behaves like hard reset except that PCIe MMRs (memory-mapped registers) and DDR3 EMIF MMRs contents are retained. By default, these initiators are configured as hard reset, but can be configured as soft reset in the RSCFG Register of the PLL Controller. Contents of the DDR3 SDRAM memory can be retained during a soft reset if the SDRAM is placed in self-refresh mode.
Local reset	$\overline{\text{LRESET}}$ pin Watchdog timer time-out LPSC MMRs	Resets the C66x CorePac, without disturbing clock alignment or memory contents. The device configuration pins are not relatched.

(1) All masters in the device have access to the PLL control registers.

11.4.1 Power-on Reset

Power-on reset is used to reset the entire device, including the test and emulation logic.

Power-on reset is initiated by the following:

1. $\overline{\text{POR}}$ pin
2. $\overline{\text{RESETFULL}}$ pin

During power-up, the $\overline{\text{POR}}$ pin must be asserted (driven low) until the power supplies have reached their normal operating conditions. Also a $\overline{\text{RESETFULL}}$ pin is provided to allow reset of the entire device, including the reset-isolated logic, when the device is already powered up. For this reason, the $\overline{\text{RESETFULL}}$ pin, unlike $\overline{\text{POR}}$, should be driven by the onboard host control other than the power good circuitry. For power-on reset, the Core PLL Controller comes up in bypass mode and the PLL is not enabled. Other resets do not affect the state of the PLL or the dividers in the PLL Controller.

The following sequence must be followed during a power-on reset:

1. Wait for all power supplies to reach normal operating conditions while keeping the $\overline{\text{POR}}$ and $\overline{\text{RESETFULL}}$ pins asserted (driven low). While $\overline{\text{POR}}$ is asserted, all pins except $\overline{\text{RESETSTAT}}$ will be set to high-impedance. After the $\overline{\text{POR}}$ pin is deasserted (driven high), all Z group pins, low group pins, and high group pins are set to their reset state and remain in their reset state until otherwise configured by their respective peripheral. All peripherals that are power-managed are disabled after a power-on reset and must be enabled through the Device State Control Registers (for more details, see Section 10.2.3).
2. Clocks are reset, and they are propagated throughout the chip to reset any logic that was using reset synchronously. All logic is now reset and $\overline{\text{RESETSTAT}}$ is driven low, indicating that the device is in reset.
3. $\overline{\text{POR}}$ must be held active until all supplies on the board are stable, and then for at least an additional period of time (as specified in Section 11.2.1) for the chip-level PLLs to lock.
4. The $\overline{\text{POR}}$ pin can now be deasserted. Reset-sampled pin values are latched at this point. Then, all chip-level PLLs are taken out of reset, locking sequences begin, and all power-on device initialization processes begin.
5. After device initialization is complete, the $\overline{\text{RESETSTAT}}$ pin is deasserted (driven high). By this time, the DDR3A PLL and DDR3B PLL have already completed their locking sequences and are supplying a valid clock. The system clocks of the PLL controllers are allowed to finish their current cycles and then

Copyright © 2012–2017, Texas Instruments Incorporated

are paused for 10 cycles of their respective system reference clocks. After the pause, the system clocks are restarted at their default divide-by settings.

6. The device is now out of reset and code execution begins as dictated by the selected boot mode.

NOTE

To most of the device, reset is deasserted only when the $\overline{\text{POR}}$ and $\overline{\text{RESET}}$ pins are both deasserted (driven high). Therefore, in the sequence described above, if the $\overline{\text{RESET}}$ pin is held low past the low period of the $\overline{\text{POR}}$ pin, most of the device will remain in reset. The $\overline{\text{RESET}}$ pin should not be tied to the $\overline{\text{POR}}$ pin.

11.4.2 Hard Reset

A hard reset will reset everything on the device except the PLLs, test logic, emulation logic, and reset-isolated modules. $\overline{\text{POR}}$ should also remain deasserted during this time.

Hard reset is initiated by the following:

- $\overline{\text{RESET}}$ pin
- RSCTRL Register in the PLL Controller
- Watchdog timer
- Emulation

By default, all the initiators listed above are configured to generate a hard reset. Except for emulation, all of the other three initiators can be configured in the RSCFG Register in the PLL Controller to generate soft resets.

The following sequence must be followed during a hard reset:

1. The $\overline{\text{RESET}}$ pin is asserted (driven low) for a minimum of 24 CLKIN1 cycles. During this time, the $\overline{\text{RESET}}$ signal propagates to all modules (except those specifically mentioned above). To prevent off-chip contention during the warm reset, all I/O must be Hi-Z for modules affected by $\overline{\text{RESET}}$.
2. Once all logic is reset, $\overline{\text{RESETSTAT}}$ is asserted (driven low) to denote that the device is in reset.
3. The $\overline{\text{RESET}}$ pin can now be released. A minimal device initialization begins to occur. Note that configuration pins are not relatched and clocking is unaffected within the device.
4. After device initialization is complete, the $\overline{\text{RESETSTAT}}$ pin is deasserted (driven high).

NOTE

The $\overline{\text{POR}}$ pin should be held inactive (high) throughout the warm reset sequence. Otherwise, if $\overline{\text{POR}}$ is activated (brought low), the minimum $\overline{\text{POR}}$ pulse width must be met. The $\overline{\text{RESET}}$ pin should not be tied to the $\overline{\text{POR}}$ pin.

11.4.3 Soft Reset

A soft reset behaves like a hard reset except that the EMIF16 MMRs, DDR3A EMIF MMRs, PCIe MMRs sticky bits, and external memory content are retained. $\overline{\text{POR}}$ should also remain deasserted during this time.

Soft reset is initiated by the following:

- $\overline{\text{RESET}}$ pin
- RSCTRL Register in the PLL Controller
- Watchdog timer

Copyright © 2012–2017, Texas Instruments Incorporated

In the case of a soft reset, the clock logic and the power control logic of the peripherals are not affected and, therefore, the enabled/disabled state of the peripherals is not affected. On a soft reset, the DDR3A and DDR3B memory controller registers are not reset. If the user places the DDR3A and DDR3B SDRAM in self-refresh mode before invoking the soft reset, the DDR3A and DDR3B SDRAM memory content is retained.

During a soft reset, the following occurs:

1. The $\overline{\text{RESETSTAT}}$ pin goes low to indicate an internal reset is being generated. The reset propagates through the system. Internal system clocks are not affected. PLLs remain locked.
2. After device initialization is complete, the $\overline{\text{RESETSTAT}}$ pin is deasserted (driven high). In addition, the PLL Controller pauses system clocks for approximately eight cycles. At this point:
   - The peripherals remain in the state they were in before the soft reset.
   - The states of the Boot Mode configuration pins are preserved as controlled by the DEVSTAT Register.
   - The DDR3A and DDR3B MMRs and PCIe MMRs retain their previous values. Only the DDR3A and DDR3B memory controller and PCIe state machines are reset by the soft reset.
   - The PLL Controller remains in the mode it was in before the soft reset.
   - System clocks are unaffected.

The boot sequence is started after the system clocks are restarted. Because the Boot Mode configuration pins are not latched with a soft reset, the previous values (as shown in the DEVSTAT Register), are used to select the boot mode.

11.4.4 Local Reset

The local reset can be used to reset a particular C66x CorePac without resetting any other device components.

Local reset is initiated by the following:

- $\overline{\text{LRESET}}$ pin
- Watchdog timer should cause one of the below based on the setting of the CORESEL[2:0] and RSTCFG registers in the PLL Controller. (See Section 11.5.2.8 and Section 8.3.2.)
  - Local reset
  - NMI
  - NMI followed by a time delay and then a local reset for the C66x CorePac selected
  - Hard reset by requesting reset via the PLL Controller
- LPSC MMRs (memory-mapped registers)

For more details see the *KeyStone Architecture Phase Locked Loop (PLL) Controller User's Guide*.

11.4.5 ARM CorePac Reset

The ARM CorePac uses a combination of power-on-reset and module-reset to reset its components, such as the Cortex-A15 processor, memory subsystem, debug logic, and so forth. The ARM CorePac incorporates the PSC to generate resets for its internal modules. Details of reset generation and distribution inside the ARM CorePac can be found in the *KeyStone II Architecture ARM CorePac User's Guide*.

11.4.6 Reset Priority

If any of the previously mentioned reset sources occur simultaneously, the PLL Controller processes only the highest priority reset request. The reset request priorities are as follows (high to low):

- Power-on reset
- Hard/soft reset

Copyright © 2012–2017, Texas Instruments Incorporated

11.4.7 Reset Controller Register

The reset controller registers are part of the PLL Controller MMRs. All 66AK2Hxx device-specific MMRs are covered in Section 11.5.2. For more details on these registers and how to program them, see the *KeyStone Architecture Phase Locked Loop (PLL) Controller User's Guide*.

Copyright © 2012–2017, Texas Instruments Incorporated

11.4.8 Reset Electrical Data and Timing

Table 11-10 shows the reset timing requirements and Table 11-11 shows the reset switching characteristics.

Table 11-10. Reset Timing Requirements(1)

(see Figure 11-4 and Figure 11-5)

NO.			MIN	MAX	UNIT
		RESETFULL Pin Reset			
1	tw(RESETFULL)	Pulse width – pulse width RESETFULL low	500C		ns
		Soft/Hard-Reset			
2	tw(RESET)	Pulse width – pulse width RESET low	500C		ns

(1) C = 1/SYSCLK1 clock frequency in ns

Table 11-11. Reset Switching Characteristics(1)

(see Figure 11-4 and Figure 11-5)

NO.	PARAMETER		MIN	MAX	UNIT
		RESETFULL Pin Reset			
3	td(RESETFULLH-RESETSTATH)	Delay time – RESETSTAT high after RESETFULL high		50000C	ns
		Soft/Hard Reset			
4	td(RESETH-RESETSTATH)	Delay time – RESETSTAT high after RESET high		50000C	ns

(1) C = 1/SYSCLK1 clock frequency in ns

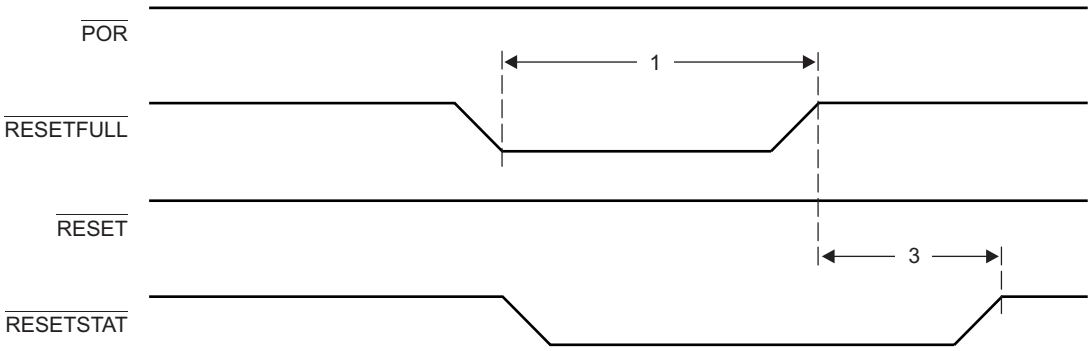

Figure 11-4. RESETFULL Reset Timing

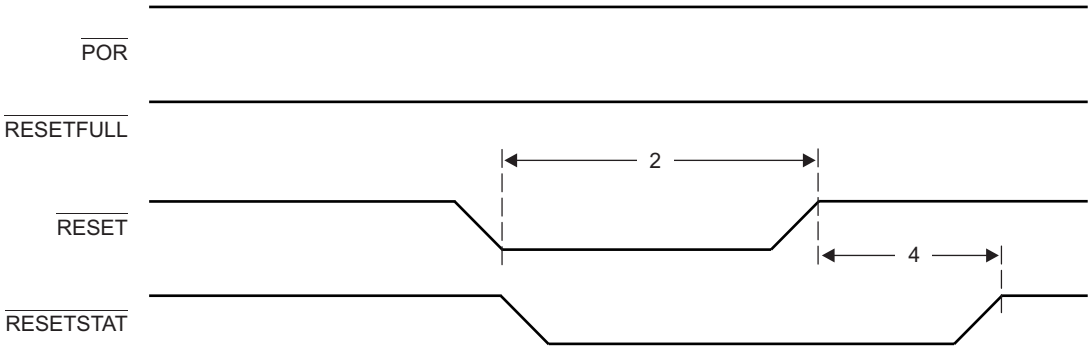

Figure 11-5. Soft/Hard Reset Timing

Table 11-12 shows the boot configuration timing requirements.

Copyright © 2012–2017, Texas Instruments Incorporated

Table 11-12. Boot Configuration Timing Requirements(1)

(see Figure 11-6)

NO.			MIN	MAX	UNIT
1	tsu(GPIOn-$\overline{\text{RESETFULL}}$)	Setup time – GPIO valid before $\overline{\text{RESETFULL}}$ asserted	12C		ns
2	th($\overline{\text{RESETFULL}}$-GPIOn)	Hold time – GPIO valid after $\overline{\text{RESETFULL}}$ asserted	12C		ns

(1) C = 1/SYSCLK1 clock frequency in ns.

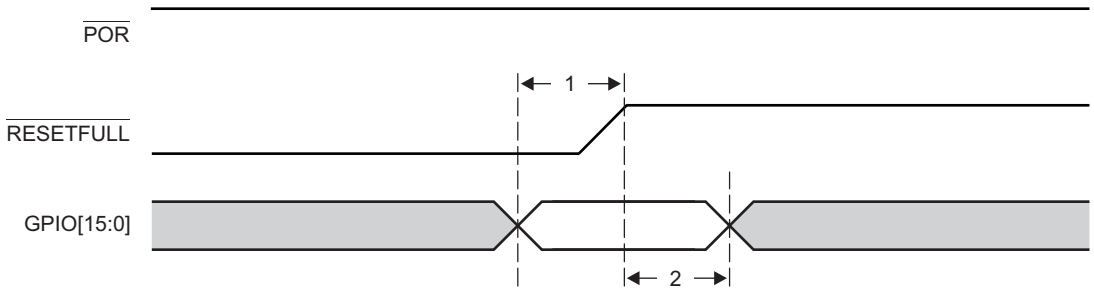

Figure 11-6. Boot Configuration Timing

11.5 Main PLL, ARM PLL, DDR3A PLL, DDR3B PLL, PASS PLL and the PLL Controllers

This section provides a description of the Main PLL, ARM PLL, DDR3A PLL, DDR3B PLL, PASS PLL, and the PLL Controller. For details on the operation of the PLL Controller module, see the *KeyStone Architecture Phase Locked Loop (PLL) Controller User's Guide*.

The Main PLL is controlled by the standard PLL Controller. The PLL Controller manages the clock ratios, alignment, and gating for the system clocks to the device. By default, the device powers up with the main PLL bypassed. Figure 11-7 shows a block diagram of the Main PLL and the PLL Controller.

The ARM PLL, DDR3A PLL, DDR3B PLL, and PASS PLL are used to provide dedicated clock to the ARM CorePac, DDR3A, DDR3B, and PASS respectively. These chip level PLLs support a wide range of multiplier and divider values, which can be programmed through the chip level registers in the Device Control register block. The Boot ROM will program the multiplier values for main PLL, ARM PLL and PASS PLL based on boot mode. (See Section 10 for more details.)

The DDR3A PLL and DDR3B PLL are used to supply clocks to DDR3A and DDR3B EMIF logic. These PLLs can also be used without programming the PLL Controller. Instead, they can be controlled using the chip-level registers (DDR3APLLCTL0, DDR3APLLCTL1, DDR3BPLLCTL0, DDR3BPLLCTL1) in the Device Control register block. To write to these registers, software must go through an unlocking sequence using the KICK0/KICK1 registers.

The multiplier values for all chip-level PLLs can be reprogrammed later based on the input parameter table. This feature provides flexibility in that these PLLs may be able to reuse other clock sources instead of having its own clock source.

Copyright © 2012–2017, Texas Instruments Incorporated

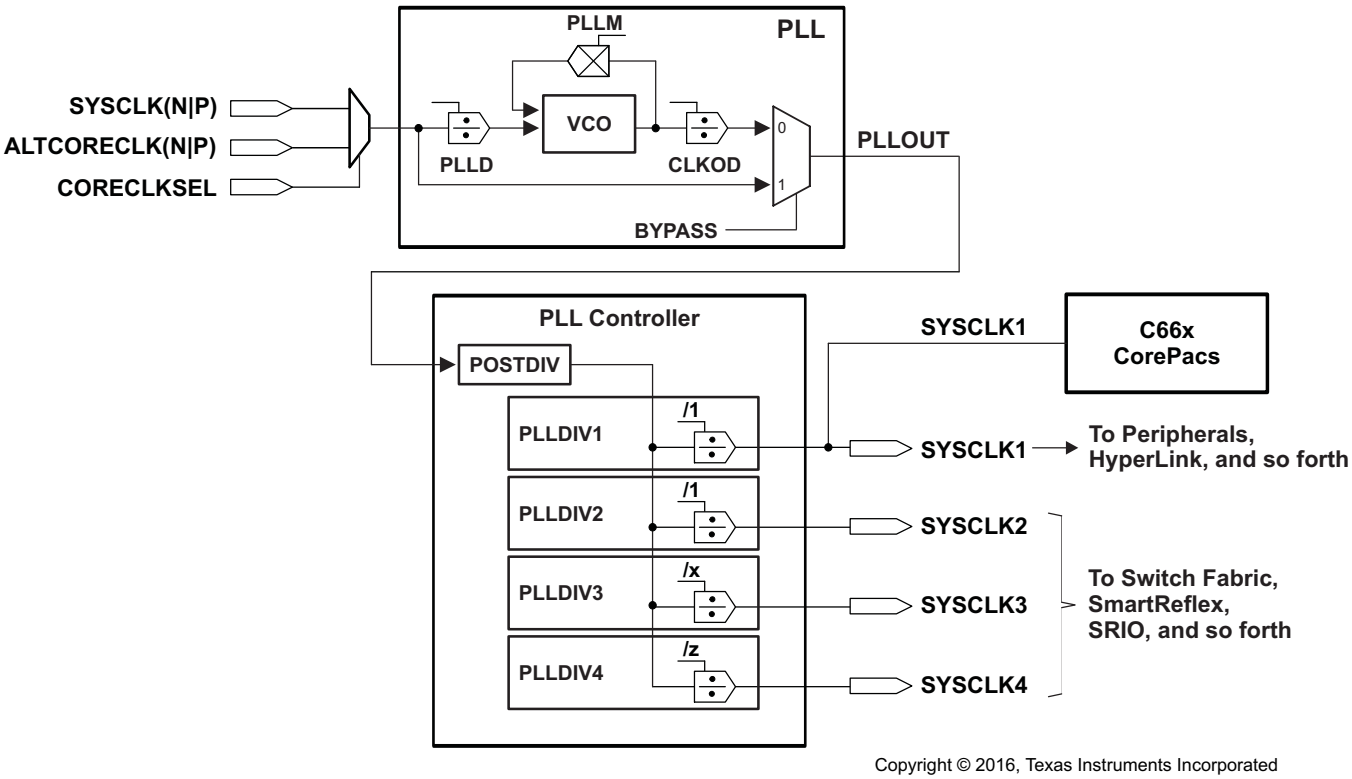

Copyright © 2016, Texas Instruments Incorporated

Figure 11-7. Main PLL and PLL Controller

The Main PLL Controller registers can be accessed by any master in the device. The PLLM[5:0] bits of the multiplier are controlled by the PLLM Register inside the PLL Controller and the PLLM[12:6] bits are controlled by the chip-level MAINPLLCTL0 Register. The output divide and bypass logic of the PLL are controlled by fields in the SECCTL Register in the PLL Controller. Only PLLDIV3, and PLLDIV4 are programmable on the device. See the *KeyStone Architecture Phase Locked Loop (PLL) Controller User's Guide* for more details on how to program the PLL controller.

The multiplication and division ratios within the PLL and the post-division for each of the chip-level clocks are determined by a combination of this PLL and the Main PLL Controller. The Main PLL Controller also controls reset propagation through the chip, clock alignment, and test points. The Main PLL Controller monitors the PLL status and provides an output signal indicating when the PLL is locked.

Main PLL power is supplied externally via the Main PLL power-supply pin (AVDDA1). An external EMI filter circuit must be added to all PLL supplies. See *Hardware Design Guide for KeyStone II Devices* for detailed recommendations. For the best performance, TI recommends that all the PLL external components be on a single side of the board without jumpers, switches, or components other than those shown. For reduced PLL jitter, maximize the spacing between switching signal traces and the PLL external components (C1, C2, and the EMI Filter).

The minimum SYSCLK rise and fall times should also be observed. For the input clock timing requirements, see Section 11.5.5.

It should be assumed that any registers not included in these sections are not supported by the device. Furthermore, only the bits within the registers described here are supported. Avoid writing to any reserved memory location or changing the value of reserved bits.

The PLL Controller module as described in the *KeyStone Architecture Phase Locked Loop (PLL) Controller User's Guide* includes a superset of features, some of which are not supported on the 66AK2Hxx device. The following sections describe the registers that are supported.

Copyright © 2012–2017, Texas Instruments Incorporated

11.5.1 Main PLL Controller Device-Specific Information

11.5.1.1 Internal Clocks and Maximum Operating Frequencies

The Main PLL, used to drive the C66x CorePacs, the switch fabric, and a majority of the peripheral clocks (all but theARM CorePacs, DDR3, and the PASS modules) requires a PLL Controller to manage the various clock divisions, gating, and synchronization. Unlike other PLL, CLKOD functionality of Main PLL is replaced by PLL controller Post-Divider register (POSTDIV). The POSTDIV.RATIO[3:0] and POSTDIV.POSTDEN bits control the post divider ratio and divider enable respectively. PLLM[5:0] input of the Main PLL is controlled by the PLL controller PLLM register.

The Main PLL Controller has four SYSCLK outputs that are listed below, along with the clock descriptions. Each SYSCLK has a corresponding divider that divides down the output clock of the PLL. Note that dividers are not programmable unless explicitly mentioned in the description below.

- **SYSCLK1:** Full-rate clock for all C66x CorePacs. Using local dividers, SYSCLK1 is used to derive clocks required for the majority of peripherals that do not need reset isolation.

  The system peripherals and modules driven by SYSCLK1 are as follows; however, not all peripherals are supported in every part. See the Features chapter for the complete list of peripherals supported in your part.

  EMIF16, USB 3.0, HyperLink, PCIe, SGMII, SRIO, GPIO, Timer64, I^2C, SPI, TeraNet, UART, ROM, CIC, Security Manager, BootCFG, PSC, Queue Manager, Semaphore, MPUs, EDMA, MSMC, DDR3, EMIF.
- **SYSCLK2:** Full-rate, reset-isolated clock used to generate various other clocks required by peripherals that need reset isolation: for example, SmartReflex and SRIO.
- **SYSCLK3:** 1/x-rate clock used to clock the C66x CorePac emulation. The default rate for this clock is 1/3. This clock is programmable from /1 to /32, where this clock does not violate the maximum of 350 MHz. SYSCLK3 can be turned off by software.
- **SYSCLK4:** 1/z-rate clock for the system trace module only. The default rate for this clock is 1/5. This clock is configurable: the maximum configurable clock is 210 MHz and the minimum configuration clock is 32 MHz. SYSCLK4 can be turned off by software.
- **SYSCLK5:** Slow, free running clock. The default rate for this clock is 1/24. SYSCLK5 cannot be turned off by software.

Only SYSCLK3, SYSCLK4, and SYSCLK5 are programmable.

11.5.1.2 Local Clock Dividers

The clock signals from the Main PLL Controller are routed to various modules and peripherals on the device. Some modules and peripherals have one or more internal clock dividers. Other modules and peripherals have no internal clock dividers, but are grouped together and receive clock signals from a shared local clock divider. Internal and shared local clock dividers have fixed division ratios, as shown in Table 11-13.

Copyright © 2012–2017, Texas Instruments Incorporated

Table 11-13. Main PLL Controller Module Clock Domains Internal and Shared Local Clock Dividers

CLOCK	MODULE	INTERNAL CLOCK DIVIDER(S)	SHARED LOCAL CLOCK DIVIDER
SYSCLK1 Internal Clock Dividers			
SYSCLK1	ARM CorePac	/1, /3, /3, /6, /6	--
	C66x DSP CorePacs	/1, /2, /3, /4	--
	Chip Interrupt Controllers (CICx)	/6	--
	DDR3 Memory Controller A (also receives clocks from the DDR3A_PLL)	/2	--
	DDR3 Memory Controller B (also receives clocks from the DDR3B_PLL)	/3	--
	EMIF16	/6	--
	HyperLink	/2, /3, /6	--
	MultiCore Shared Memory Controller (MSMC)	/1	--
	PCI express (PCIe)	/2, /3, /4, /6	--
	ROM	/6	--
	Serial Gigabit Media Independent Interface (SGMII)	/2, /3, /6, /8	--
	Universal Asynchronous Receiver/Transmitter (UART)	/6	--
	Universal Serial Bus 3.0 (USB 3.0)	/3, /6	--
SYSCLK1 Shared Local Clock Dividers			
SYSCLK1	Power/Sleep Controller (PSC)	--	/12, /24
	EDMA	--	/3
	Memory Protection Units (MPUx)		
	Semaphore		
	TeraNet (SYSCLK1/3 domain)		
SYSCLK1	Boot Config	--	/6
	General-Purpose Input/Output (GPIO)		
	I^2C		
	Security Manager		
	Serial Peripheral Interconnect (SPI)		
	TeraNet (CPU /6 domain)		
	Timers		
SYSCLK2 Internal Clock Dividers			
SYSCLK2	Serial RapidIO (SRIO)	/3, /4, /6	--
	SmartReflex C66x CorePacs	/12, /128	--
	SmartReflex ARM CorePac	/12, /128, /128	--

11.5.1.3 Module Clock Input

Table 11-7 lists various clock domains in the device and their distribution in each peripheral. The table also shows the distributed clock division in modules and their mapping with source clocks of the device PLLs.

11.5.1.4 Main PLL Controller Operating Modes

The Main PLL Controller has two modes of operation: bypass mode and PLL mode. The mode of operation is determined by the BYPASS bit of the PLL Secondary Control Register (SECCTL).

- In bypass mode, PLL input is fed directly out as SYSCLK1.
- In PLL mode, SYSCLK1 is generated from the PLL output using the values set in the PLLM and PLLD fields in the MAINPLLCTL0 Register.

Copyright © 2012–2017, Texas Instruments Incorporated

External hosts must avoid access attempts to the DSP while the frequency of its internal clocks is changing. User software must implement a mechanism that causes the DSP to notify the host when the PLL configuration has completed.

11.5.1.5 Main PLL Stabilization, Lock, and Reset Times

The PLL stabilization time is the amount of time that must be allotted for the internal PLL regulators to become stable after device power-up. The device should not be taken out of reset until this stabilization time has elapsed.

The PLL reset time is the amount of wait time needed when resetting the PLL (writing PLLRST = 1), in order for the PLL to properly reset, before bringing the PLL out of reset (writing PLLRST = 0). For the Main PLL reset time value, see Table 11-14.

The PLL lock time is the amount of time needed from when the PLL is taken out of reset to when the PLL Controller can be switched to PLL mode. The Main PLL lock time is given in Table 11-14 .

Table 11-14. Main PLL Stabilization, Lock, and Reset Times

PARAMETER	MIN	TYP	MAX	UNIT
PLL stabilization time	100			µs
PLL lock time			2000 × C (1)	
PLL reset time	1000			ns

(1) C = SYSCLK1(N|P) cycle time in ns.

11.5.2 PLL Controller Memory Map

The memory map of the Main PLL controller is shown in Table 11-15. 66AK2Hxx-specific Main PLL controller register definitions can be found in the sections following Table 11-15. For other registers in the table, see the *KeyStone Architecture Phase Locked Loop (PLL) Controller User's Guide*.

It is recommended to use read-modify-write sequence to make any changes to the valid bits in the Main PLL controller registers.

Note that only registers documented here are accessible on the 66AK2Hxx. Other addresses in the Main PLL controller memory map including the Reserved registers must not be modified. Furthermore, only the bits within the registers described here are supported.

Table 11-15. PLL Controller Registers (Including Reset Controller)

HEX ADDRESS RANGE	ACRONYM	REGISTER NAME
00 0231 0000 – 00 0231 00E3	-	Reserved
00 0231 00E4	RSTYPE	Reset Type Status Register (Reset Main PLL Controller)
00 0231 00E8	RSTCTRL	Software Reset Control Register (Reset Main PLL Controller)
00 0231 00EC	RSTCFG	Reset Configuration Register (Reset Main PLL Controller)
00 0231 00F0	RSISO	Reset Isolation Register (Reset Main PLL Controller)
00 0231 00F0 – 00 0231 00FF	-	Reserved
00 0231 0100	PLLCTL	PLL Control Register
00 0231 0104	-	Reserved
00 0231 0108	SECCTL	PLL Secondary Control Register
00 0231 010C	-	Reserved
00 0231 0110	PLLM	PLL Multiplier Control Register
00 0231 0114	-	Reserved
00 0231 0118	PLLDIV1	PLL Controller Divider 1 Register
00 0231 011C	PLLDIV2	PLL Controller Divider 2 Register
00 0231 0120	PLLDIV3	PLL Controller Divider 3 Register
00 0231 0124	-	Reserved

Copyright © 2012–2017, Texas Instruments Incorporated

Table 11-15. PLL Controller Registers (Including Reset Controller) (continued)

HEX ADDRESS RANGE	ACRONYM	REGISTER NAME
00 0231 0128	POSTDIV	PLL Controller Post-Divide Register
00 0231 012C – 00 0231 0134	-	Reserved
00 0231 0138	PLLCMD	PLL Controller Command Register
00 0231 013C	PLLSTAT	PLL Controller Status Register
00 0231 0140	ALNCTL	PLL Controller Clock Align Control Register
00 0231 0144	DCHANGE	PLLDIV Ratio Change Status Register
00 0231 0148	CKEN	Reserved
00 0231 014C	CKSTAT	Reserved
00 0231 0150	SYSTAT	SYSCLK Status Register
00 0231 0154 – 00 0231 015C	-	Reserved
00 0231 0160	PLLDIV4	PLL Controller Divider 4 Register
00 0231 0164	PLLDIV5	Reserved
00 0231 0168	PLLDIV6	Reserved
00 0231 016C	PLLDIV7	Reserved
00 0231 0170	PLLDIV8	Reserved
00 0231 0174 – 00 0231 0193	PLLDIV9 – PLLDIV16	Reserved
00 0231 0194 – 00 0231 01FF	-	Reserved

11.5.2.1 PLL Secondary Control Register (SECCTL)

The PLL secondary control register contains extra fields to control the Main PLL and is shown in Figure 11-8 and described in Table 11-16.

Figure 11-8. PLL Secondary Control Register (SECCTL)

31	30	29	28	27	26	25	24	23	22	21	20	19	18	17	16	15	14	13	12	11	10	9	8	7	6	5	4	3	2	1	0
Reserved								BYPASS	OUTPUT DIVIDE				Reserved																			
R-0000 0000								RW-1	RW-0001				RW-001 0000 0000 0000 0000																		

Legend: R/W = Read/Write; R = Read only; – *n* = value after reset

Table 11-16. PLL Secondary Control Register Field Descriptions

Bit	Field	Description
31-24	Reserved	Reserved
23	BYPASS	PLL bypass mode: • 0 = PLL is not in BYPASS mode • 1 = PLL is in BYPASS mode
22-19	OUTPUT DIVIDE	Output divider ratio bits • 0h = ÷1. Divide frequency by 1 • 1h = ÷2. Divide frequency by 2 • 2h = ÷3. Divide frequency by 3 • 3h = ÷4. Divide frequency by 4 • 4h – Fh = ÷5 to ÷16. Divide frequency range: divide frequency by 5 to divide frequency by 80.
18-0	Reserved	Reserved

11.5.2.2 PLL Controller Divider Register (PLLDIV3 and PLLDIV4)

The PLL controller divider registers (PLLDIV3 and PLLDIV4) are shown in Figure 11-9 and described in Table 11-17. The default values of the RATIO field on a reset for PLLDIV3, and PLLDIV4 are different as mentioned in the footnote of Figure 11-9 .

Copyright © 2012–2017, Texas Instruments Incorporated

Figure 11-9. PLL Controller Divider Register (PLLDIVn)

31	30	29	28	27	26	25	24	23	22	21	20	19	18	17	16	15	14	13	12	11	10	9	8	7	6	5	4	3	2	1	0
Reserved																Dn(1)EN	Reserved							RATIO							
R-0																R/W-1	R-0							R/W-n(2)							

Legend: R/W = Read/Write; R = Read only; – *n* = value after reset

(1) D3EN for PLLDIV3; D4EN for PLLDIV4
(2) n=02h for PLLDIV3; n=03h for PLLDIV4

Table 11-17. PLL Controller Divider Register Field Descriptions

Bit	Field	Description
31-16	Reserved	Reserved
15	D*n*EN	Divider D*n* enable bit (See footnote of Figure 11-9) • 0 = Divider *n* is disabled • 1 = No clock output. Divider *n* is enabled.
14-8	Reserved	Reserved. The reserved bit location is always read as 0. A value written to this field has no effect.
7-0	RATIO	Divider ratio bits (See footnote of Figure 11-9) • 0h = ÷1. Divide frequency by 1 • 1h = ÷2. Divide frequency by 2 • 2h = ÷3. Divide frequency by 3 • 3h = ÷4. Divide frequency by 4 • 4h – 4Fh = ÷5 to ÷80. Divide frequency range: divide frequency by 5 to divide frequency by 80.

11.5.2.3 PLL Controller Clock Align Control Register (ALNCTL)

The PLL controller clock align control register (ALNCTL) is shown in Figure 11-10 and described in Table 11-18.

Figure 11-10. PLL Controller Clock Align Control Register (ALNCTL)

31	30	29	28	27	26	25	24	23	22	21	20	19	18	17	16	15	14	13	12	11	10	9	8	7	6	5	4	3	2	1	0
Reserved																											ALN4	ALN3	Reserved			
R-0																											R/W-1	R/W-1	R-0			

Legend: R/W = Read/Write; R = Read only; – *n* = value after reset, for reset value

Table 11-18. PLL Controller Clock Align Control Register Field Descriptions

Bit	Field	Description
31-5	Reserved	Reserved. This location is always read as 0. A value written to this field has no effect.
4-3	ALN[4:3]	SYSCLK*n* alignment. Do not change the default values of these fields. • 0 = Do not align SYSCLK*n* to other SYSCLKs during GO operation. If SYS*n* in DCHANGE is set, SYSCLK*n* switches to the new ratio immediately after the GOSET bit in PLLCMD is set. • 1 = Align SYSCLK*n* to other SYSCLKs selected in ALNCTL when the GOSET bit in PLLCMD is set and SYS*n* in DCHANGE is 1. The SYSCLK*n* rate is set to the ratio programmed in the RATIO bit in PLLDIV*n*.
2-0	Reserved	Reserved. This location is always read as 0. A value written to this field has no effect.

11.5.2.4 PLLDIV Divider Ratio Change Status Register (DCHANGE)

Whenever a different ratio is written to the PLLDIV*n* registers, the PLL CTL flags the change in the DCHANGE status register. During the GO operation, the PLL controller changes only the divide ratio of the SYSCLKs with the bit set in DCHANGE. Note that the ALNCTL register determines if that clock also needs to be aligned to other clocks. The PLLDIV divider ratio change status register is shown in Figure 11-11 and described in Table 11-19.

Figure 11-11. PLLDIV Divider Ratio Change Status Register (DCHANGE)

31	30	29	28	27	26	25	24	23	22	21	20	19	18	17	16	15	14	13	12	11	10	9	8	7	6	5	4	3	2	1	0
Reserved																											SYS4	SYS3	Reserved			
R-0																											R/W-1	R/W-1	R-0			

Legend: R/W = Read/Write; R = Read only; – *n* = value after reset, for reset value

Copyright © 2012–2017, Texas Instruments Incorporated

Table 11-19. PLLDIV Divider Ratio Change Status Register Field Descriptions

Bit	Field	Description
31-5	Reserved	Reserved. This bit location is always read as 0. A value written to this field has no effect.
4-3	SYS[4:3]	Identifies when the SYSCLK*n* divide ratio has been modified. • 0 = SYSCLK*n* ratio has not been modified. When GOSET is set, SYSCLK*n* will not be affected. • 1 = SYSCLK*n* ratio has been modified. When GOSET is set, SYSCLK*n* will change to the new ratio.
2-0	Reserved	Reserved. This bit location is always read as 0. A value written to this field has no effect.

11.5.2.5 SYSCLK Status Register (SYSTAT)

The SYSCLK status register (SYSTAT) shows the status of SYSCLK[4:1]. SYSTAT is shown in Figure 11-12 and described in Table 11-20.

Figure 11-12. SYSCLK Status Register (SYSTAT)

31	30	29	28	27	26	25	24	23	22	21	20	19	18	17	16	15	14	13	12	11	10	9	8	7	6	5	4	3	2	1	0
Reserved																												SYS 4ON	SYS 3ON	SYS 2ON	SYS 1ON
R-n																												R-1	R-1	R-1	R-1

Legend: R/W = Read/Write; R = Read only; – *n* = value after reset

Table 11-20. SYSCLK Status Register Field Descriptions

Bit	Field	Description
31-4	Reserved	Reserved. This location is always read as 0. A value written to this field has no effect.
3-0	SYS[N]ON(1)	SYSCLK[N] on status • 0 = SYSCLK[N] is gated • 1 = SYSCLK[N] is on

(1) Where N = 1, 2, 3, or 4

11.5.2.6 Reset Type Status Register (RSTYPE)

The reset type status register (RSTYPE) latches the cause of the last reset. If multiple reset sources occur simultaneously, this register latches the highest priority reset source. The reset type status register is shown in Figure 11-13 and described in Table 11-21.

Figure 11-13. Reset Type Status Register (RSTYPE)

31	30	29	28	27	26	25	24	23	22	21	20	19	18	17	16	15	14	13	12	11	10	9	8	7	6	5	4	3	2	1	0
Reserved			EMU-RST	Reserved																WDRST[N]				Reserved					PLLCTRL RST	$\overline{\text{RESET}}$	POR
R-0			R-0	R-0																R-0				R-0					R-0	R-0	R-0

Legend: R = Read only; – *n* = value after reset

Table 11-21. Reset Type Status Register Field Descriptions

Bit	Field	Description
31-29	Reserved	Reserved. Always reads as 0. Writes have no effect.
28	EMU-RST	Reset initiated by emulation • 0 = Not the last reset to occur • 1 = The last reset to occur
27-12	Reserved	Reserved. Always reads as 0. Writes have no effect.
11-8	WDRST[3:0]	Reset initiated by Watchdog Timer[N] • 0 = Not the last reset to occur • 1 = The last reset to occur
7-3	Reserved	Reserved. Always reads as 0. Writes have no effect.
2	PLLCTLRST	Reset initiated by PLLCTL • 0 = Not the last reset to occur • 1 = The last reset to occur

Copyright © 2012–2017, Texas Instruments Incorporated

Table 11-21. Reset Type Status Register Field Descriptions (continued)

Bit	Field	Description
1	$\overline{\text{RESET}}$	$\overline{\text{RESET}}$ reset • 0 = $\overline{\text{RESET}}$ was not the last reset to occur • 1 = $\overline{\text{RESET}}$ was the last reset to occur
0	POR	Power-on reset • 0 = Power-on reset was not the last reset to occur • 1 = Power-on reset was the last reset to occur

11.5.2.7 Reset Control Register (RSTCTRL)

This register contains a key that enables writes to the MSB of this register and the RSTCFG register. The key value is 0x5A69. A valid key will be stored as 0x000C. Any other key value is invalid. When the RSTCTRL or the RSTCFG is written, the key is invalidated. Every write must be set up with a valid key. The software reset control register (RSTCTRL) is shown in Figure 11-14 and described in Table 11-22.

Figure 11-14. Reset Control Register (RSTCTRL)

31	30	29	28	27	26	25	24	23	22	21	20	19	18	17	16	15	14	13	12	11	10	9	8	7	6	5	4	3	2	1	0
Reserved															SWRST	KEY															
R-0x0000															R/W-0x[1]	R/W-0x0003															

Legend: R = Read only; – *n* = value after reset;

(1) Writes are conditional based on valid key.

Table 11-22. Reset Control Register Field Descriptions

Bit	Field	Description
31-17	Reserved	Reserved
16	SWRST	Software reset • 0 = Reset • 1 = Not reset
15-0	KEY	Key used to enable writes to RSTCTRL and RSTCFG.

11.5.2.8 Reset Configuration Register (RSTCFG)

This register is used to configure the type of reset (a hard reset or a soft reset) initiated by $\overline{\text{RESET}}$, the watchdog timer, and the RSTCTRL register of the Main PLL controller. By default, these resets are hard resets. The RSTCFG is shown in Figure 11-15 and described in Table 11-23.

Figure 11-15. Reset Configuration Register (RSTCFG)

31	30	29	28	27	26	25	24	23	22	21	20	19	18	17	16
Reserved															
R-0x000000															
15	14	13	12	11	10	9	8	7	6	5	4	3	2	1	0
Reserved		PLLCTLRSTTYPE	$\overline{\text{RESET}}$ TYPE	Reserved								WDTYPE[N][1]			
R-0x000000		R/W-0[2]	R/W-0[2]	R-0x0								R/W-0x00[2]			

Legend: R = Read only; R/W = Read/Write; – *n* = value after reset

(1) Where N = 1, 2, 3,....N (Not all these outputs may be used on a specific device.)
(2) Writes are conditional based on valid key. For details, see Section 11.5.2.7.

Table 11-23. Reset Configuration Register Field Descriptions

Bit	Field	Description
31-14	Reserved	Reserved
13	PLLCTLRSTTYPE	PLL controller initiates a software-driven reset of type: • 0 = Hard reset (default) • 1 = Soft reset

Table 11-23. Reset Configuration Register Field Descriptions (continued)

Bit	Field	Description
12	$\overline{\text{RESET}}$ TYPE	$\overline{\text{RESET}}$ initiates a reset of type: • 0 = Hard reset (default) • 1 = Soft reset
11-4	Reserved	Reserved
3-0	WDTYPE[3:0]	Watchdog timer [N] initiates a reset of type: • 0 = Hard reset (default) • 1 = Soft reset

11.5.2.9 Reset Isolation Register (RSISO)

This register is used to select the module clocks that must maintain their clocking without pausing through nonpower-on reset. Setting any of these bits effectively blocks reset to all Main PLL control registers in order to maintain current values of PLL multiplier, divide ratios, and other settings. Along with setting the module-specific bit in RSISO, the corresponding MDCTLx[12] bit also needs to be set in the PSC to reset-isolate a particular module. For more information on the MDCTLx register, see the *KeyStone Architecture Power Sleep Controller (PSC) User's Guide*. The RSISO is shown in Figure 11-16 and described in Table 11-24.

Figure 11-16. Reset Isolation Register (RSISO)

31	30	29	28	27	26	25	24	23	22	21	20	19	18	17	16	15	14	13	12	11	10	9	8	7	6	5	4	3	2	1	0
Reserved																Reserved						SRIOISO	SRISO	Reserved				Rsvd	Reserved		
R-0x0000																R-0x00						R/W-0	R/W-0	R-0x0				R/W-0	R-000		

Legend: R = Read only; R/W = Read/Write; – *n* = value after reset

Table 11-24. Reset Isolation Register Field Descriptions

Bit	Field	Description
31-10	Reserved	Reserved.
9	SRIOISO	Isolate SRIO module control • 0 = Not reset isolated • 1 = Reset isolated
8	SRISO	Isolate SmartReflex control • 0 = Not reset isolated • 1 = Reset isolated
7-4	Reserved	Reserved
3	Reserved	Reserved
2-0	Reserved	Reserved

11.5.3 Main PLL Control Registers

The Main PLL uses two chip-level registers (MAINPLLCTL0 and MAINPLLCTL1) along with the Main PLL controller for its configuration. These MMRs (memory-mapped registers) exist inside the Bootcfg space. To write to these registers, software should go through an unlocking sequence using the KICK0 and KICK1 registers. These registers reset only on a $\overline{\text{POR}}$ reset.

For valid configurable values of the MAINPLLCTL registers, see Section 10.1.4. See Section 10.2.3.4 for the address location of the KICK registers and their locking and unlocking sequences.

See Figure 11-17 and Table 11-25 for MAINPLLCTL0 details and Figure 11-18 and Table 11-26 for MAINPLLCTL1 details.

Copyright © 2012–2017, Texas Instruments Incorporated

Figure 11-17. Main PLL Control Register 0 (MAINPLLCTL0)

31	30	29	28	27	26	25	24	23	22	21	20	19	18	17	16	15	14	13	12	11	10	9	8	7	6	5	4	3	2	1	0
BWADJ[7:0]								Reserved					PLLM[12:6]							Reserved						PLLD					
RW-0000 0101								RW – 0000 0					RW-0000000							RW-000000						RW-000000					

Legend: RW = Read/Write; – *n* = value after reset

Table 11-25. Main PLL Control Register 0 (MAINPLLCTL0) Field Descriptions

Bit	Field	Description
31-24	BWADJ[7:0]	BWADJ[11:8] and BWADJ[7:0] are in MAINPLLCTL0 and MAINPLLCTL1 registers. BWADJ[11:0] should be programmed to a value related to PLLM[12:0] value based on the equation: BWADJ = ((PLLM+1)>>1) – 1.
23-19	Reserved	Reserved
18-12	PLLM[12:6]	7-bits of a 13-bit field PLLM that selects the values for the multiplication factor. PLLM field is loaded with the multiply factor minus 1. The PLLM[5:0] bits of the multiplier are controlled by the PLLM register inside the PLL Controller and the PLLM[12:6] bits are controlled by the above chip-level register. MAINPLLCTL0 register PLLM[12:6] bits should be written just before writing to PLLM register PLLM[5:0] bits in the controller to have the complete 13 bit value latched when the GO operation is initiated in the PLL controller. See the *KeyStone Architecture Phase Locked Loop (PLL) Controller User's Guide* for the recommended programming sequence. Output Divide ratio and Bypass enable/disable of the Main PLL is also controlled by the SECCTL register in the PLL Controller. See the Section 11.5.2.1 for more details.
11-6	Reserved	Reserved
5-0	PLLD	A 6-bit field that selects the values for the reference divider. PLLD field is loaded with reference divide value minus 1.

Figure 11-18. Main PLL Control Register 1 (MAINPLLCTL1)

31	30	29	28	27	26	25	24	23	22	21	20	19	18	17	16	15	14	13	12	11	10	9	8	7	6	5	4	3	2	1	0
Reserved																									ENSAT	Reserved		BWADJ[11:8]			
RW-00000000000000000000000000																									RW-0	R-00		RW- 0000			

Legend: RW = Read/Write; – *n* = value after reset

Table 11-26. Main PLL Control Register 1 (MAINPLLCTL1) Field Descriptions

Bit	Field	Description
31-7	Reserved	Reserved
6	ENSAT	Needs to be set to 1 for proper PLL operation
5-4	Reserved	Reserved
3-0	BWADJ[11:8]	BWADJ[11:8] and BWADJ[7:0] are in MAINPLLCTL0 and MAINPLLCTL1 registers. BWADJ[11:0] should be programmed to a value related to PLLM[12:0] value based on the equation: BWADJ = ((PLLM+1)>>1) – 1.

11.5.4 ARM PLL Control Registers

The ARM PLL uses two chip-level registers (ARMPLLCTL0 and ARMPLLCTL1) without using the Main PLL controller like other PLLs for its configuration. These MMRs (memory-mapped registers) exist inside the Bootcfg space. To write to these registers, software must go through an unlocking sequence using the KICK0 and KICK1 registers. These registers reset only on a $\overline{\text{POR}}$ reset.

For valid configurable values of the ARMPLLCTL registers, see Section 10.1.4. See Section 10.2.3.4 for the address location of the KICK registers and their locking and unlocking sequences.

See Figure 11-19 and Table 11-27 for ARMPLLCTL0 details and Figure 11-20 and Table 11-28 for ARMPLLCTL1 details.

Figure 11-19. ARM PLL Control Register 0 (ARMPLLCTL0)(1)

31	30	29	28	27	26	25	24	23	22	21	20	19	18	17	16	15	14	13	12	11	10	9	8	7	6	5	4	3	2	1	0
BWADJ[7:0]								BYPASS	CLKOD				PLLM													PLLD					
RW-0000 1001								RW-1	RW-0001				RW-0000000010011													RW-000000					

Legend: RW = Read/Write; – *n* = value after reset

(1) This register is Reset on $\overline{\text{POR}}$ only. See the *KeyStone Architecture Phase Locked Loop (PLL) Controller User's Guide*.

Copyright © 2012–2017, Texas Instruments Incorporated

Table 11-27. ARM PLL Control Register 0 Field Descriptions

Bit	Field	Description
31-24	BWADJ[7:0]	BWADJ[11:8] and BWADJ[7:0] are in ARMPLLCTL0 and ARMPLLCTL1 registers. BWADJ[11:0] should be programmed to a value related to PLLM[12:0] value based on the equation: BWADJ = ((PLLM+1)>>1) – 1.
23	BYPASS	PLL bypass mode: • 0 = PLL is not in BYPASS mode • 1 = PLL is in BYPASS mode
22-19	CLKOD	A 4-bit field that selects the values for the PLL post divider. Valid post divider values are 1 and even values from 2 to 16. CLKOD field is loaded with output divide value minus 1
18-6	PLLM	A 13-bit field that selects the values for the multiplication factor
5-0	PLLD	A 6-bit field that selects the values for the reference divider

Figure 11-20. ARM PLL Control Register 1 (ARMPLLCTL1)

31	30	29	28	27	26	25	24	23	22	21	20	19	18	17	16	15	14	13	12	11	10	9	8	7	6	5	4	3	2	1	0
Reserved																	PLLRST	Reserved							ENSAT	Reserved		BWADJ[11:8]			
RW-00000000000000000																	RW-0	RW-0000000							RW-0	R-00		RW-0000			

Legend: RW = Read/Write; – *n* = value after reset

Table 11-28. ARM PLL Control Register 1 Field Descriptions

Bit	Field	Description
31-15	Reserved	Reserved
14	PLLRST	PLL Reset bit • 0 = PLL Reset is released • 1 = PLL Reset is asserted
13-7	Reserved	Reserved
6	ENSAT	Needs to be set to 1 for proper PLL operation
5-4	Reserved	Reserved
3-0	BWADJ[11:8]	BWADJ[11:8] and BWADJ[7:0] are in ARMPLLCTL0 and ARMPLLCTL1 registers. BWADJ[11:0] should be programmed to a value related to PLLM[12:0] value based on the equation: BWADJ = ((PLLM+1)>>1) – 1.

See the *KeyStone Architecture Phase Locked Loop (PLL) Controller User's Guide* for the recommended programming sequence. Output Divide ratio and Bypass enable/disable of the ARM PLL is also controlled by the SECCTL register in the PLL Controller. See Section 11.5.2.1 for more details.

11.5.5 Main PLL Controller, ARM, SRIO, HyperLink, PCIe, USB Clock Input Electrical Data and Timing

The Main PLL controller, ARM, SRIO, HyperLink, PCIe, USB clock input timing requirements are shown in Table 11-29.

Table 11-29. Main PLL Controller, ARM, SRIO, HyperLink, PCIe, USB Clock Input Timing Requirements (1)

(see Figure 11-21, Figure 11-22, Figure 11-23 and Figure 11-24)

NO.			MIN	MAX	UNIT
		SYSCLK[P:N]			
1	tc(SYSCLKN)	Cycle time SYSCLKN cycle time	3.25	25	ns
1	tc(SYSCLKP)	Cycle time SYSCLKP cycle time	3.25	25	ns
3	tw(SYSCLKN)	Pulse width SYSCLKN high	0.45*tc	0.55*tc	ns
2	tw(SYSCLKN)	Pulse width SYSCLKN low	0.45*tc	0.55*tc	ns
2	tw(SYSCLKP)	Pulse width SYSCLKP high	0.45*tc	0.55*tc	ns
3	tw(SYSCLKP)	Pulse width SYSCLKP low	0.45*tc	0.55*tc	ns
4	tr(SYSCLK_200 mV)	Transition time SYSCLK differential rise time (200 mV)	50	350	ps
4	tf(SYSCLK_200 mV)	Transition time SYSCLK differential fall time (200 mV)	50	350	ps

(1) See *Hardware Design Guide for KeyStone II Devices* for detailed recommendations.

Copyright © 2012–2017, Texas Instruments Incorporated

Table 11-29. Main PLL Controller, ARM, SRIO, HyperLink, PCIe, USB Clock Input Timing Requirements[1] (continued)

(see Figure 11-21, Figure 11-22, Figure 11-23 and Figure 11-24)

NO.			MIN	MAX	UNIT
5	tj(SYSCLKN)	Jitter, peak_to_peak _ periodic SYSCLKN		0.2*tc(SYSCLKN)	ps
5	tj(SYSCLKP)	Jitter, peak_to_peak _ periodic SYSCLKP		0.2*tc(SYSCLKP)	ps
ARMCLK[P:N]					
1	tc(ARMCLKN)	Cycle time ARMCLKN cycle time	3.2	25	ns
1	tc(ARMCLKP)	Cycle time ARMCLKP cycle time	3.2	25	ns
3	tw(ARMCLKN)	Pulse width ARMCLKN high	0.45*tc(ARMCLKN)	0.55*tc(ARMCLKN)	ns
2	tw(ARMCLKN)	Pulse width ARMCLKN low	0.45*tc(ARMCLKN)	0.55*tc(ARMCLKN)	ns
2	tw(ARMCLKP)	Pulse width ARMCLKP high	0.45*tc(ARMCLKP)	0.55*tc(ARMCLKP)	ns
3	tw(ARMCLKP)	Pulse width ARMCLKP low	0.45*tc(ARMCLKP)	0.55*tc(ARMCLKP)	ns
4	tr(ARMCLK_200 mV)	Transition time ARMCLK differential rise time (200 mV)	50	350	ps
4	tf(ARMCLK_200 mV)	Transition time ARMCLK differential fall time (200 mV)	50	350	ps
5	tj(ARMCLKN)	Jitter, peak_to_peak _ periodic ARMCLKN		100	ps
5	tj(ARMCLKP)	Jitter, peak_to_peak _ periodic ARMCLKP		100	ps
ALTCORECLK[P:N]					
1	tc(ALTCORCLKN)	Cycle time ALTCORECLKN cycle time	3.2	25	ns
1	tc(ALTCORECLKP)	Cycle time ALTCORECLKP cycle time	3.2	25	ns
3	tw(ALTCORECLKN)	Pulse width ALTCORECLKN high	0.45*tc(ALTCORECLKN)	0.55*tc(ALTCORECLKN)	ns
2	tw(ALTCORECLKN)	Pulse width ALTCORECLKN low	0.45*tc(ALTCORECLKN)	0.55*tc(ALTCORECLKN)	ns
2	tw(ALTCORECLKP)	Pulse width ALTCORECLKP high	0.45*tc(ALTCORECLKP)	0.55*tc(ALTCORECLKP)	ns
3	tw(ALTCORECLKP)	Pulse width ALTCORECLKP low	0.45*tc(ALTCORECLKP)	0.55*tc(ALTCORECLKP)	ns
4	tr(ALTCORECLK_200 mV)	Transition time ALTCORECLK differential rise time (200 mV)	50	350	ps
4	tf(ALTCORECLK_200 mV)	Transition time ALTCORECLK differential fall time (200 mV)	50	350	ps
5	tj(ALTCORECLKN)	Jitter, peak_to_peak _ periodic ALTCORECLKN		100	ps
5	tj(ALTCORECLKP)	Jitter, peak_to_peak _ periodic ALTCORECLKP		100	ps

Copyright © 2012–2017, Texas Instruments Incorporated

Table 11-29. Main PLL Controller, ARM, SRIO, HyperLink, PCIe, USB Clock Input Timing Requirements[1] (continued)

(see Figure 11-21, Figure 11-22, Figure 11-23 and Figure 11-24)

NO.			MIN	MAX	UNIT
SRIOSGMIICLK[P:N]					
1	tc(SRIOSGMIICLKN)	Cycle time SRIOSGMIICLKN cycle time	3.2 or 6.4 or 8		ns
1	tc(SRIOSGMIICLKP)	Cycle time SRIOSGMIICLKP cycle time	3.2 or 6.4 or 8		ns
3	tw(SRIOSGMIICLKN)	Pulse width SRIOSGMIICLKN high	0.45*tc(SRIOSGMIICLKN)	0.55*tc(SRIOSGMIICLKN)	ns
2	tw(SRIOSGMIICLKN)	Pulse width SRIOSGMIICLKN low	0.45*tc(SRIOSGMIICLKN)	0.55*tc(SRIOSGMIICLKN)	ns
2	tw(SRIOSGMIICLKP)	Pulse width SRIOSGMIICLKP high	0.45*tc(SRIOSGMIICLKP)	0.55*tc(SRIOSGMIICLKP)	ns
3	tw(SRIOSGMIICLKP)	Pulse width SRIOSGMIICLKP low	0.45*tc(SRIOSGMIICLKP)	0.55*tc(SRIOSGMIICLKP)	ns
4	tr(SRIOSGMIICLK_200mV)	Transition time SRIOSGMIICLK differential rise time (200 mV)	50	350	ps
4	tf(SRIOSGMIICLK_200mV)	Transition time SRIOSGMIICLK differential fall time (200 mV)	50	350	ps
5	tj(SRIOSGMIICLKN)	Jitter, RMS SRIOSGMIICLKN		2	ps, RMS
5	tj(SRIOSGMIICLKP)	Jitter, RMS SRIOSGMIICLKP		2	ps, RMS
5	tj(SRIOSGMIICLKN)	Jitter, RMS SRIOSGMIICLKN (SRIO not used)		4	ps, RMS
5	tj(SRIOSGMIICLKP)	Jitter, RMS SRIOSGMIICLKP (SRIO not used)		4	ps, RMS
HYPxCLK[P:N]					
1	tc(HYPCLKN)	Cycle time HYPCLKN cycle time	3.2 or 4 or 6.4		ns
1	tc(HYPCLKP)	Cycle time HYPCLKP cycle time	3.2 or 4 or 6.4		ns
3	tw(HYPCLKN)	Pulse width HYPCLKN high	0.45*tc(HYPCLKN)	0.55*tc(HYPCLKN)	ns
2	tw(HYPCLKN)	Pulse width HYPCLKN low	0.45*tc(HYPCLKN)	0.55*tc(HYPCLKN)	ns
2	tw(HYPCLKP)	Pulse width HYPCLKP high	0.45*tc(HYPCLKP)	0.55*tc(HYPCLKP)	ns
3	tw(HYPCLKP)	Pulse width HYPCLKP low	0.45*tc(HYPCLKP)	0.55*tc(HYPCLKP)	ns
4	tr(HYPCLK)	Rise time HYPCLK differential rise time (10% to 90%)		0.2*tc(HYPCLKP)	ps
4	tf(HYPCLK)	Fall time HYPCLK differential fall time (10% to 90%)		0.2*tc(HYPCLKP)	ps
5	tj(HYPCLKN)	Jitter, RMS HYPCLKN		4	ps, RMS
5	tj(HYPCLKP)	Jitter, RMS HYPCLKP		4	ps, RMS
PCIECLK[P:N]					
1	tc(PCIECLKN)	Cycle time PCIECLKN cycle time	3.2 or 4 or 6.4 or 10		ns
1	tc(PCIECLKP)	Cycle time PCIECLKP cycle time	3.2 or 4 or 6.4 or 10		ns
3	tw(PCIECLKN)	Pulse width PCIECLKN high	0.45*tc(PCIECLKN)	0.55*tc(PCIECLKN)	ns
2	tw(PCIECLKN)	Pulse width PCIECLKN low	0.45*tc(PCIECLKN)	0.55*tc(PCIECLKN)	ns
2	tw(PCIECLKP)	Pulse width PCIECLKP high	0.45*tc(PCIECLKP)	0.55*tc(PCIECLKP)	ns
3	tw(PCIECLKP)	Pulse width PCIECLKP low	0.45*tc(PCIECLKP)	0.55*tc(PCIECLKP)	ns
4	tr(PCIECLK)	Rise time PCIECLK differential rise time (10% to 90%)		0.2*tc(PCIECLKP)	ps
4	tf(PCIECLK)	Fall time PCIECLK differential fall time (10% to 90%)		0.2*tc(PCIECLKP)	ps
5	tj(PCIECLKN)	Jitter, RMS PCIECLKN		4	ps, RMS
5	tj(PCIECLKP)	Jitter, RMS PCIECLKP		4	ps, RMS
USBCLK[P:M]					
1	tc(USBCLKN)	Cycle time USBCLKM cycle time	5	50	ns
1	tc(USBCLKP)	Cycle time USBCLKP cycle time	5	50	ns
3	tw(USBCLKN)	Pulse width USBCLKM high	0.45*tc(USBCLKN)	0.55*tc(USBCLKN)	ns
2	tw(USBCLKN)	Pulse width USBCLKM low	0.45*tc(USBCLKN)	0.55*tc(USBCLKN)	ns
2	tw(USBCLKP)	Pulse width USBCLKP high	0.45*tc(USBCLKP)	0.55*tc(USBCLKP)	ns
3	tw(USBCLKP)	Pulse width USBCLKP low	0.45*tc(USBCLKP)	0.55*tc(USBCLKP)	ns
4	tr(USBCLK)	Rise time USBCLK differential rise time (10% to 90%)		TBD	ps
4	tf(USBCLK)	Fall time USBCLK differential fall time (10% to 90%)		TBD	ps

Copyright © 2012–2017, Texas Instruments Incorporated

Table 11-29. Main PLL Controller, ARM, SRIO, HyperLink, PCIe, USB Clock Input Timing Requirements[(1)] (continued)

(see Figure 11-21, Figure 11-22, Figure 11-23 and Figure 11-24)

NO.			MIN	MAX	UNIT
5	tj(USBCLKN)	Jitter, RMS USBCLKM		3	ps, RMS
5	tj(USBCLKP)	Jitter, RMS USBCLKP		3	ps, RMS

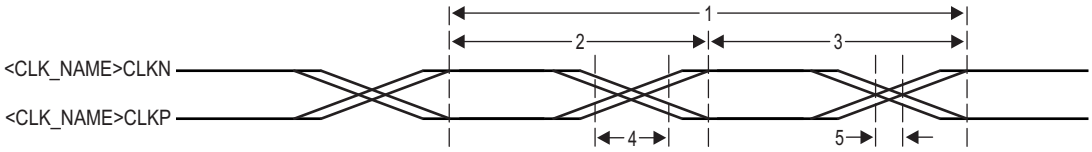

Figure 11-21. Main PLL Controller, SRIO, HyperLink, PCIe, USB Clock Input Timing

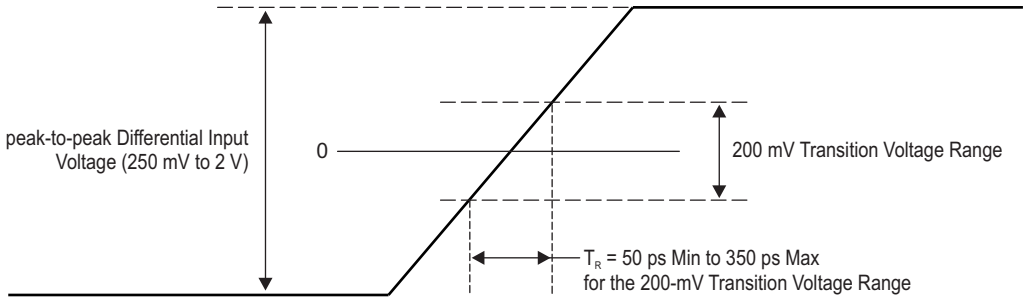

Figure 11-22. Main PLL Transition Time

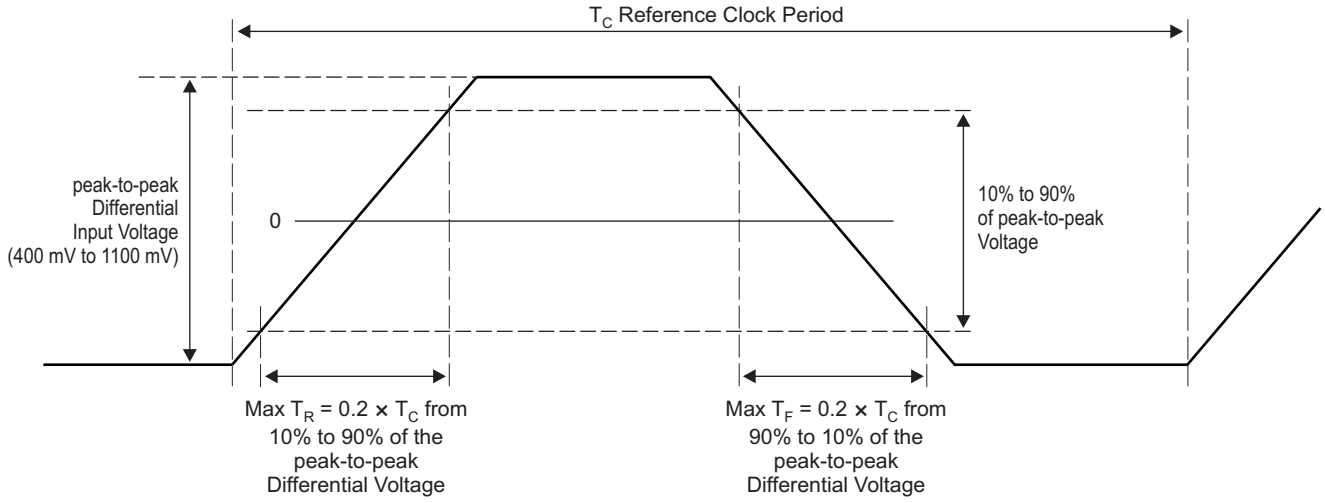

Figure 11-23. HYP0CLK, HYP1CLK, and PCIECLK Rise and Fall Times

Copyright © 2012–2017, Texas Instruments Incorporated

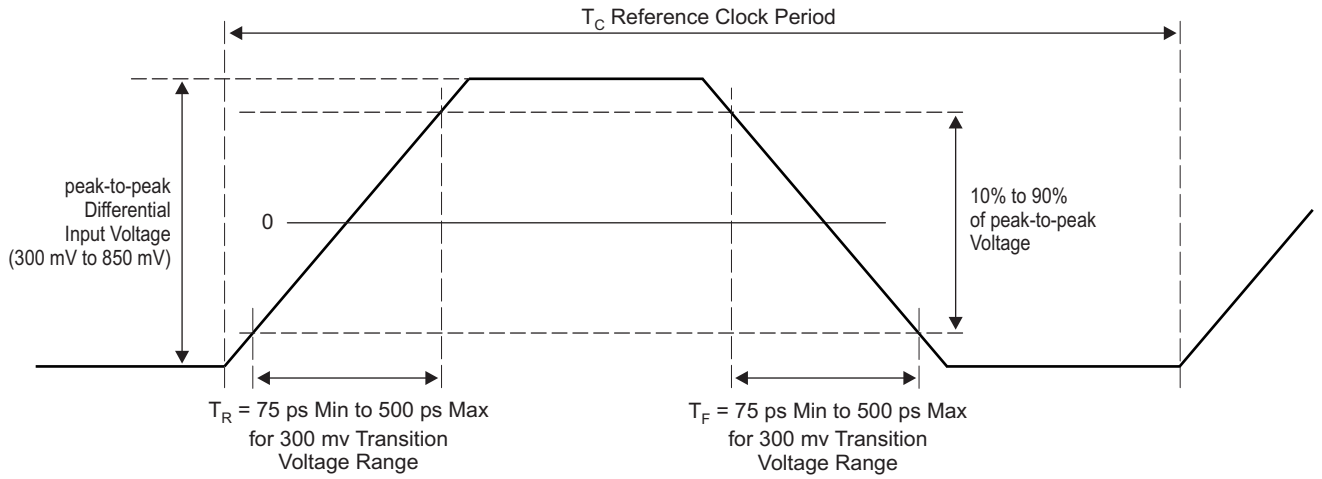

Figure 11-24. USBCLK Rise and Fall Times

11.6 DDR3A PLL and DDR3B PLL

The DDR3A PLL and DDR3B PLL generate interface clocks for the DDR3A and DDR3B memory controllers. When coming out of power-on reset, DDR3A PLL and DDR3B PLL are programmed to a valid frequency during the boot configuration process before being enabled and used.

DDR3A PLL and DDR3B PLL power is supplied via the DDR3 PLL power-supply pin (AVDDA2). An external EMI filter circuit must be added to all PLL supplies. See *Hardware Design Guide for KeyStone II Devices* for detailed recommendations.

Figure 11-25 shows a block diagram of the DDR3A PLL and DDR3B PLL.

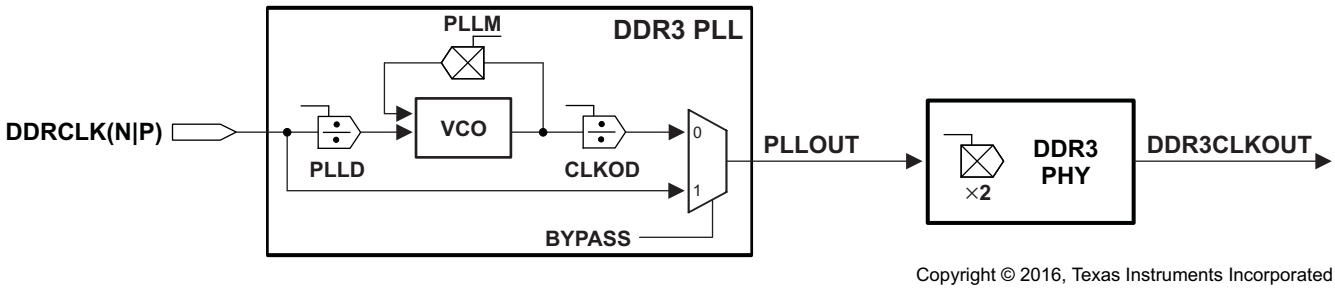

Copyright © 2016, Texas Instruments Incorporated

Figure 11-25. DDR3A PLL and DDR3B PLL Block Diagram

11.6.1 DDR3A PLL and DDR3B PLL Control Registers

The DDR3A PLL and DDR3B PLL, which are used to drive the DDR3A PHY and DDR3B PHY for the EMIF, do not use a PLL controller. DDR3A PLL and DDR3B PLL can be controlled using the DDR3APLLCTL0/DDR3BPLLCTL0 and DDR3APLLCTL1/DDR3BPLLCTL1 registers in the Bootcfg module. These MMRs (memory-mapped registers) exist inside the Bootcfg space. To write to these registers, software must go through an unlocking sequence using the KICK0 and KICK1 registers. For suggested configurable values, see Section 10.1.4. See Section 10.2.3.4 for the address location of the registers and locking and unlocking sequences for accessing the registers. These registers are reset on $\overline{\text{POR}}$ only.

The DDR3A PLL and DDR3B PLL control registers are shown in Figure 11-26 and Figure 11-27 and described in Table 11-30 and Table 11-31.

Copyright © 2012–2017, Texas Instruments Incorporated

Figure 11-26. DDR3A PLL and DDR3B PLL Control Register 0 (DDR3APLLCTL0/DDR3BPLLCTL0)

31	30	29	28	27	26	25	24	23	22	21	20	19	18	17	16	15	14	13	12	11	10	9	8	7	6	5	4	3	2	1	0
BWADJ[7:0]								BYPASS	CLKOD				PLLM													PLLD						
RW-0000 1001								RW-1	RW-0001				RW-0000000010011													RW-000000					

LEGEND: R/W = Read/Write; R = Read only; -*n* = value after reset

Table 11-30. DDR3A PLL and DDR3B PLL Control Register 0 Field Descriptions

Bit	Field	Description
31-24	BWADJ[7:0]	BWADJ[11:8] and BWADJ[7:0] are in DDR3PLLCTL0 and DDR3PLLCTL1 registers. BWADJ[11:0] should be programmed to a value related to PLLM[12:0] value based on the equation: BWADJ = ((PLLM+1)>>1) – 1.
23	BYPASS	PLL bypass mode: • 0 = PLL is not in BYPASS mode • 1 = PLL is in BYPASS mode
22-19	CLKOD	A 4-bit field that selects the values for the PLL post divider. Valid post divider values are 1 and even values from 2 to 16. CLKOD field is loaded with output divide value minus 1
18-6	PLLM	A 13-bit field that selects the values for the PLL multiplication factor. PLLM field is loaded with the multiply factor minus 1
5-0	PLLD	A 6-bit field that selects the values for the reference (input) divider. PLLD field is loaded with reference divide value minus 1

Figure 11-27. DDR3A PLL and DDR3B PLL Control Register 1 (DDR3APLLCTL0/DDR3BPLLCTL1)

31	30	29	28	27	26	25	24	23	22	21	20	19	18	17	16	15	14	13	12	11	10	9	8	7	6	5	4	3	2	1	0
Reserved																	PLLRST	Reserved							ENSAT	Reserved		BWADJ[11:8]			
RW-00000000000000000																	RW-0	RW-0000000							RW-0	R-00		RW-0000			

Legend: RW = Read/Write; – *n* = value after reset

Table 11-31. DDR3A PLL and DDR3B PLL Control Register 1 Field Descriptions

Bit	Field	Description
31-15	Reserved	Reserved
14	PLLRST	PLL Reset bit • 0 = PLL Reset is released • 1 = PLL Reset is asserted
13-7	Reserved	Reserved
6	ENSAT	Needs to be set to 1 for proper PLL operation
5-4	Reserved	Reserved
3-0	BWADJ[11:8]	BWADJ[11:8] and BWADJ[7:0] are in DDR3PLLCTL0 and DDR3PLLCTL1 registers. BWADJ[11:0] should be programmed to a value related to PLLM[12:0] value based on the equation: BWADJ = ((PLLM+1)>>1) – 1.

11.6.2 DDR3A PLL and DDR3B PLL Device-Specific Information

As shown in Figure 11-25, the output of DDR3A PLL and DDR3B PLL (PLLOUT) is divided by 2 and directly fed to the DDR3A and DDR3B memory controller. During power-on resets, the internal clocks of the DDR3 PLL are affected as described in Section 11.4. The DDR3 PLL is unlocked only during the power-up sequence and is locked by the time the $\overline{\text{RESETSTAT}}$ pin goes high. It does not lose lock during any of the other resets.

11.6.3 DDR3 PLL Input Clock Electrical Data and Timing

Table 11-32 applies to both DDR3A and DDR3B memory interfaces.

Table 11-32. DDR3 PLL DDRCLK(N|P) Timing Requirements

(see Figure 11-28 and Figure 11-22)

NO.		MIN	MAX	UNIT
	DDRCLK[P:N]			
1	tc(DDRCLKN) Cycle time _ DDRCLKN cycle time	3.2	25	ns

Copyright © 2012–2017, Texas Instruments Incorporated

Table 11-32. DDR3 PLL DDRCLK(N|P) Timing Requirements (continued)

(see Figure 11-28 and Figure 11-22)

NO.			MIN	MAX	UNIT
1	tc(DDRCLKP)	Cycle time _ DDRCLKP cycle time	3.2	25	ns
3	tw(DDRCLKN)	Pulse width _ DDRCLKN high	0.45*tc(DDRCLKN)	0.55*tc(DDRCLKN)	ns
2	tw(DDRCLKN)	Pulse width _ DDRCLKN low	0.45*tc(DDRCLKN)	0.55*tc(DDRCLKN)	ns
2	tw(DDRCLKP)	Pulse width _ DDRCLKP high	0.45*tc(DDRCLKP)	0.55*tc(DDRCLKP)	ns
3	tw(DDRCLKP)	Pulse width _ DDRCLKP low	0.45*tc(DDRCLKP)	0.55*tc(DDRCLKP)	ns
4	tr(DDRCLK_200 mV)	Transition time _ DDRCLK differential rise time (200 mV)	50	350	ps
4	tf(DDRCLK_200 mV)	Transition time _ DDRCLK differential fall time (200 mV)	50	350	ps
5	tj(DDRCLKN)	Jitter, peak_to_peak _ periodic DDRCLKN		0.02*tc(DDRCLKN)	ps
5	tj(DDRCLKP)	Jitter, peak_to_peak _ periodic DDRCLKP		0.02*tc(DDRCLKP)	ps

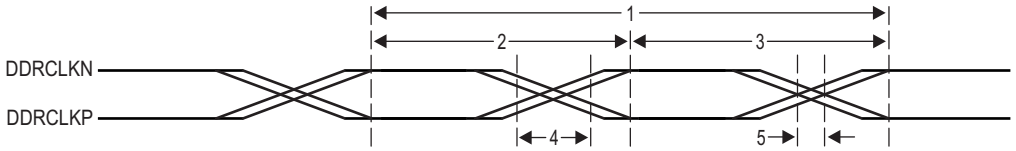

Figure 11-28. DDR3 PLL DDRCLK Timing

Copyright © 2012–2017, Texas Instruments Incorporated

11.7 PASS PLL

The PASS PLL generates interface clocks for the Network Coprocessor. Using the PACLKSEL pin the user can select the input source of the PASS PLL as either the output of the Main PLL mux or the PASSCLK clock reference source. When coming out of power-on reset, PASS PLL comes out in a bypass mode and needs to be programmed to a valid frequency before being enabled and used.

PASS PLL power is supplied via the PASS PLL power-supply pin (AVDDA3). An external EMI filter circuit must be added to all PLL supplies. See *Hardware Design Guide for KeyStone II Devices* for detailed recommendations.

The PASS PLL block diagram is shown in Figure 11-29.

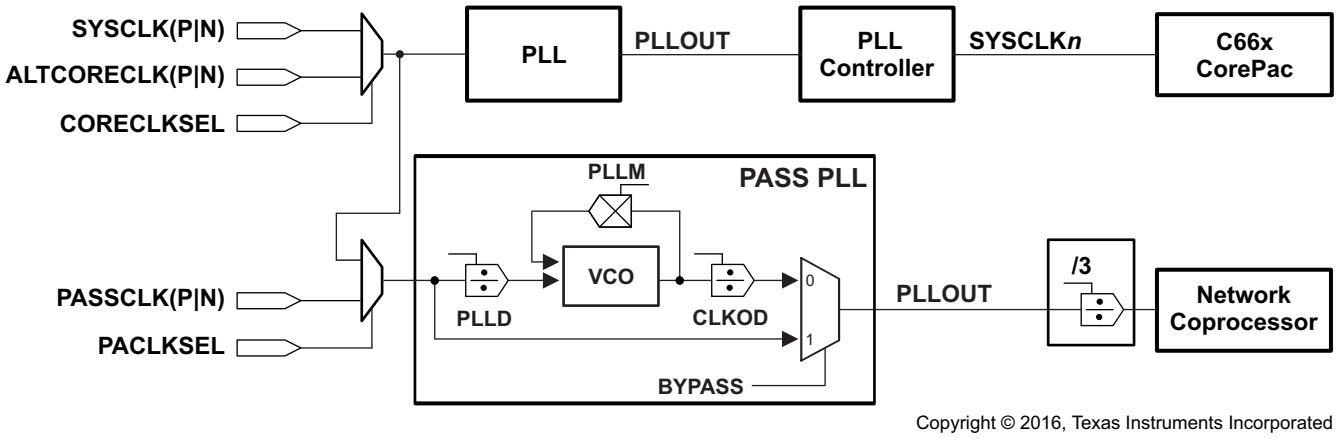

Figure 11-29. PASS PLL Block Diagram

11.7.1 PASS PLL Local Clock Dividers

The clock signal from the PASS PLL controller is routed to the network coprocessor. The NetCP module has two internal dividers with fixed division ratios, as shown in .

11.7.2 PASS PLL Control Registers

The PASS PLL, which is used to drive the network coprocessor, does not use a PLL controller. PASS PLL can be controlled using the PAPLLCTL0 and PAPLLCTL1 registers in the Bootcfg module. These MMRs (memory-mapped registers) exist inside the Bootcfg space. To write to these registers, software must go through an unlocking sequence using the KICK0 and KICK1 registers. For suggested configuration values, see Section 10.1.4. See Section 10.2.3.4 for the address location of the registers and locking and unlocking sequences for accessing these registers. These registers are reset on $\overline{\text{POR}}$ only.

The PASS PLL control registers are shown in Figure 11-30 and Figure 11-31 and described in Table 11-33 and Table 11-34.

Figure 11-30. PASS PLL Control Register 0 (PASSPLLCTL0)

31	30	29	28	27	26	25	24	23	22	21	20	19	18	17	16	15	14	13	12	11	10	9	8	7	6	5	4	3	2	1	0
BWADJ[7:0]								BYPASS	CLKOD				PLLM													PLLD						
RW-0000 1001								RW-1	RW-0001				RW-0000000010011													RW-000000					

LEGEND: RW = Read/Write; -*n* = value after reset

Table 11-33. PASS PLL Control Register 0 Field Descriptions (PASSPLLCTL0)

Bit	Field	Description
31-24	BWADJ[7:0]	BWADJ[11:8] and BWADJ[7:0] are in PASSPLLCTL0 and PASSPLLCTL1 registers. BWADJ[11:0] should be programmed to a value related to PLLM[12:0] value based on the equation: BWADJ = ((PLLM+1)>>1) – 1.

Table 11-33. PASS PLL Control Register 0 Field Descriptions (PASSPLLCTL0) (continued)

Bit	Field	Description
23	BYPASS	PLL bypass mode: • 0 = PLL is not in BYPASS mode • 1 = PLL is in BYPASS mode
22-19	CLKOD	A 4-bit field that selects the values for the PLL post divider. Valid post divider values are 1 and even values from 2 to 16. CLKOD field is loaded with output divide value minus 1
18-6	PLLM	A 13-bit field that selects the values for the multiplication factor (see note below). PLLM field is loaded with the multiply factor minus 1.
5-0	PLLD	A 6-bit field that selects the values for the reference divider. PLLD field is loaded with reference divide value minus 1.

Figure 11-31. PASS PLL Control Register 1 (PASSPLLCTL1)

31	30	29	28	27	26	25	24	23	22	21	20	19	18	17	16	15	14	13	12	11	10	9	8	7	6	5	4	3	2	1	0
Reserved																	PLLRST	PAPLL	Reserved						ENSAT	Reserved		BWADJ[11:8]			
RW-00000000000000000																	RW-0	RW-0	RW-0000000						RW-0	R-00		RW-0000			

Legend: RW = Read/Write; – *n* = value after reset

Table 11-34. PASS PLL Control Register 1 Field Descriptions (PASSPLLCTL1)

Bit	Field	Description
31-15	Reserved	Reserved
14	PLLRST	PLL Reset bit • 0 = PLL Reset is released • 1 = PLL Reset is asserted
13	PAPLL	• 0 = Not supported • 1 = PAPLL
12-7	Reserved	Reserved
6	ENSAT	Needs to be set to 1 for proper PLL operation
5-4	Reserved	Reserved
3-0	BWADJ[11:8]	BWADJ[11:8] and BWADJ[7:0] are in PASSPLLCTL0 and PASSPLLCTL1 registers. BWADJ[11:0] should be programmed to a value related to PLLM[12:0] value based on the equation: BWADJ = ((PLLM+1)>>1) – 1.

11.7.3 PASS PLL Device-Specific Information

As shown in Figure 11-29, the output of PASS PLL (PLLOUT) is divided by 3 and directly fed to the Network Coprocessor. During power-on resets, the internal clocks of the PASS PLL are affected as described in Section 11.4. The PASS PLL is unlocked only during the power-up sequence and is locked by the time the RESETSTAT pin goes high. It does not lose lock during any other resets.

11.7.4 PASS PLL Input Clock Electrical Data and Timing

Table 11-35 shows the PASS PLL timing requirements.

Table 11-35. PASS PLL Timing Requirements

(see Figure 11-32 and Figure 11-22)

NO.			MIN	MAX	UNIT
PASSCLK[P:N]					
1	tc(PASSCLKN)	Cycle time _ PASSCLKN cycle time	3.2	6.4	ns
1	tc(PASSCLKP)	Cycle time _ PASSCLKP cycle time	3.2	6.4	ns
3	tw(PASSCLKN)	Pulse width _ PASSCLKN high	0.45*tc(PASSCLKN)	0.55*tc(PASSCLKN)	ns
2	tw(PASSCLKN)	Pulse width _ PASSCLKN low	0.45*tc(PASSCLKN)	0.55*tc(PASSCLKN)	ns
2	tw(PASSCLKP)	Pulse width _ PASSCLKP high	0.45*tc(PASSCLKP)	0.55*tc(PASSCLKP)	ns
3	tw(PASSCLKP)	Pulse width _ PASSCLKP low	0.45*tc(PASSCLKP)	0.55*tc(PASSCLKP)	ns
4	tr(PASSCLK_200mV)	Transition time _ PASSCLK differential rise time (200 mV)	50	350	ps

Copyright © 2012–2017, Texas Instruments Incorporated

Table 11-35. PASS PLL Timing Requirements (continued)

(see Figure 11-32 and Figure 11-22)

NO.			MIN	MAX	UNIT
4	tf(PASSCLK_200mV)	Transition time _ PASSCLK differential fall time (200 mV)	50	350	ps
5	tj(PASSCLKN)	Jitter, peak_to_peak _ periodic PASSCLKN		100	ps, pk-pk
5	tj(PASSCLKP)	Jitter, peak_to_peak _ periodic PASSCLKP		100	ps, pk-pk

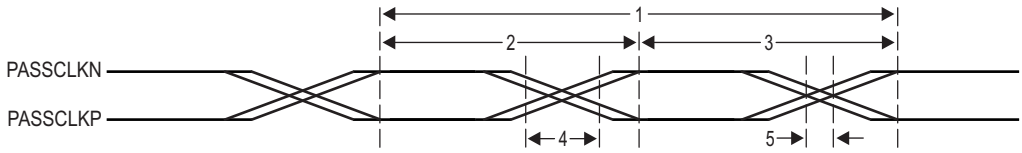

Figure 11-32. PASS PLL Timing

11.8 External Interrupts

11.8.1 External Interrupts Electrical Data and Timing

Table 11-36 shows the $\overline{\text{NMI}}$ and $\overline{\text{LRESET}}$ timing requirements.

Table 11-36. $\overline{\text{NMI}}$ and $\overline{\text{LRESET}}$ Timing Requirements[1]

(see Figure 11-33)

NO.			MIN	MAX	UNIT
1	tsu($\overline{\text{LRESET}}$ – $\overline{\text{LRESETNMIEN}}$)	Setup time – $\overline{\text{LRESET}}$ valid before $\overline{\text{LRESETNMIEN}}$ low	12*P		ns
1	tsu($\overline{\text{NMI}}$ – $\overline{\text{LRESETNMIEN}}$)	Setup time – $\overline{\text{NMI}}$ valid before $\overline{\text{LRESETNMIEN}}$ low	12*P		ns
1	tsu(CORESELn – $\overline{\text{LRESETNMIEN}}$)	Setup time – CORESEL[3:0] valid before $\overline{\text{LRESETNMIEN}}$ low	12*P		ns
2	th($\overline{\text{LRESETNMIEN}}$ – $\overline{\text{LRESET}}$)	Hold time – $\overline{\text{LRESET}}$ valid after $\overline{\text{LRESETNMIEN}}$ high	12*P		ns
2	th($\overline{\text{LRESETNMIEN}}$ – $\overline{\text{NMI}}$)	Hold time – $\overline{\text{NMI}}$ valid after $\overline{\text{LRESETNMIEN}}$ high	12*P		ns
2	th($\overline{\text{LRESETNMIEN}}$ – CORESELn)	Hold time – CORESEL[3:0] valid after $\overline{\text{LRESETNMIEN}}$ high	12*P		ns
3	tw($\overline{\text{LRESETNMIEN}}$)	Pulsewidth – $\overline{\text{LRESETNMIEN}}$ low width	12*P		ns

(1) P = 1/SYSCLK1 clock frequency in ns.

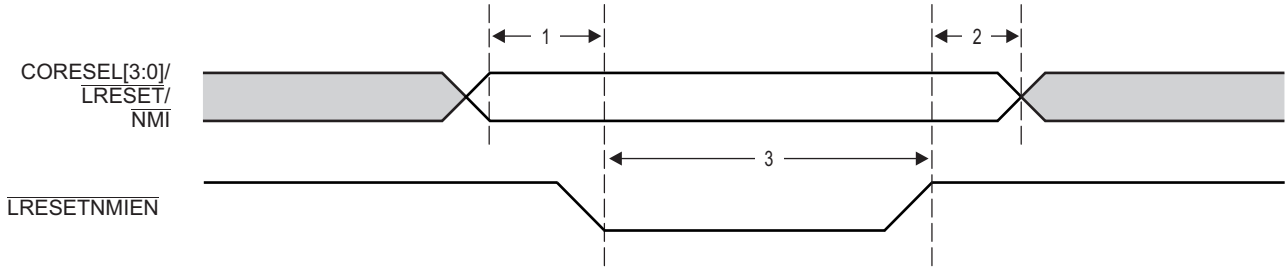

Figure 11-33. $\overline{\text{NMI}}$ and $\overline{\text{LRESET}}$ Timing

11.9 DDR3A and DDR3B Memory Controllers

The 72-bit DDR3 memory controller bus of the 66AK2Hxx is used to interface to JEDEC standard-compliant DDR3 SDRAM devices. The DDR3 external bus interfaces only to DDR3 SDRAM devices and does not share the bus with any other type of peripheral.

11.9.1 DDR3 Memory Controller Device-Specific Information

The 66AK2Hxx includes one 64-bit wide, 1.35-V / 1.5-V DDR3 SDRAM EMIF interface. The DDR3 interface can operate at 800 mega transfers per second (MTS), 1033 MTS, 1333 MTS, and 1600 MTS.

Due to the complicated nature of the interface, a limited number of topologies are supported to provide a 16-bit, 32-bit, or 64-bit interface.

The DDR3 electrical requirements are fully specified in the DDR JEDEC specification JESD79-3C. Standard DDR3 SDRAMs are available in 8-bit and 16-bit versions allowing for the following bank topologies to be supported by the interface:

- **72-bit:** Five 16-bit SDRAMs (including 8 bits of ECC)
- **72-bit:** Nine 8-bit SDRAMs (including 8 bits of ECC)
- **36-bit:** Three 16-bit SDRAMs (including 4 bits of ECC)
- **36-bit:** Five 8-bit SDRAMs (including 4 bits of ECC)
- **64-bit:** Four 16-bit SDRAMs
- **64-bit:** Eight 8-bit SDRAMs
- **32-bit:** Two 16-bit SDRAMs
- **32-bit:** Four 8-bit SDRAMs
- **16-bit:** One 16-bit SDRAM
- **16-bit:** Two 8-bit SDRAMs

The approach to specifying interface timing for the DDR3 memory bus is different than on other interfaces such as I^2C or SPI. For these other interfaces, the device timing was specified in terms of data manual specifications and I/O buffer information specification (IBIS) models. For the DDR3 memory bus, the approach is to specify compatible DDR3 devices and provide the printed-circuit board (PCB) solution and guidelines directly to the user.

A race condition may exist when certain masters write data to the DDR3 memory controller. For example, if master A passes a software message via a buffer in external memory and does not wait for an indication that the write completes before signaling to master B that the message is ready, when master B attempts to read the software message, the master B read may bypass the master A write. Thus, master B may read stale data and receive an incorrect message.

Some master peripherals (for example, EDMA3 transfer controllers with TCCMOD=0) always wait for the write to complete before signaling an interrupt to the system, thus avoiding this race condition. For masters that do not have a hardware specification of write-read ordering, it may be necessary to specify data ordering in the software.

If master A does not wait for an indication that a write is complete, it must perform the following workaround:

1. Perform the required write to DDR3 memory space.
2. Perform a dummy write to the DDR3 memory controller module ID and revision register.
3. Perform a dummy read to the DDR3 memory controller module ID and revision register.
4. Indicate to master B that the data is ready to be read after completion of the read in Step 3. The completion of the read in Step 3 ensures that the previous write was done.

Copyright © 2012–2017, Texas Instruments Incorporated

11.9.2 DDR3 Slew Rate Control

The DDR3 slew rate is controlled by use of the PHY registers. See the *Keystone II Architecture DDR3 Memory Controller User's Guide* for details.

11.9.3 DDR3 Memory Controller Electrical Data and Timing

DDR3 Design Requirements for KeyStone Devices specifies a complete DDR3 interface solution as well as a list of compatible DDR3 devices. The DDR3 electrical requirements are fully specified in the DDR3 JEDEC Specification JESD79-3C. TI has performed the simulation and system characterization to ensure all DDR3 interface timings in this solution are met. Therefore, no electrical data and timing information is supplied here for this interface.

NOTE

TI supports only designs that follow the board design guidelines outlined in the application report.

11.10 I²C Peripheral

The Inter-Integrated Circuit (I²C) module provides an interface between SoC and other devices compliant with Philips Semiconductors (now NXP Semiconductors) Inter-Integrated Circuit bus specification version 2.1. External components attached to this 2-wire serial bus can transmit/receive up to 8-bit data to/from the device through the I²C module.

11.10.1 I²C Device-Specific Information

The device includes multiple I²C peripheral modules.

NOTE

When using the I²C module, ensure there are external pullup resistors on the SDA and SCL pins.

The I²C modules on the 66AK2Hxx may be used by the SoC to control local peripheral ICs (DACs, ADCs, and so forth), communicate with other controllers in a system, or to implement a user interface.

The I²C port supports:

- Compatibility with Philips I²C specification revision 2.1 (January 2000)
- Fast mode up to 400 kbps (no fail-safe I/O buffers)
- Noise filter to remove noise of 50 ns or less
- 7-bit and 10-bit device addressing modes
- Multimaster (transmit/receive) and slave (transmit/receive) functionality
- Events: DMA, interrupt, or polling
- Slew-rate limited open-drain output buffers

Figure 11-34 shows a block diagram of the I²C module.

Copyright © 2012–2017, Texas Instruments Incorporated

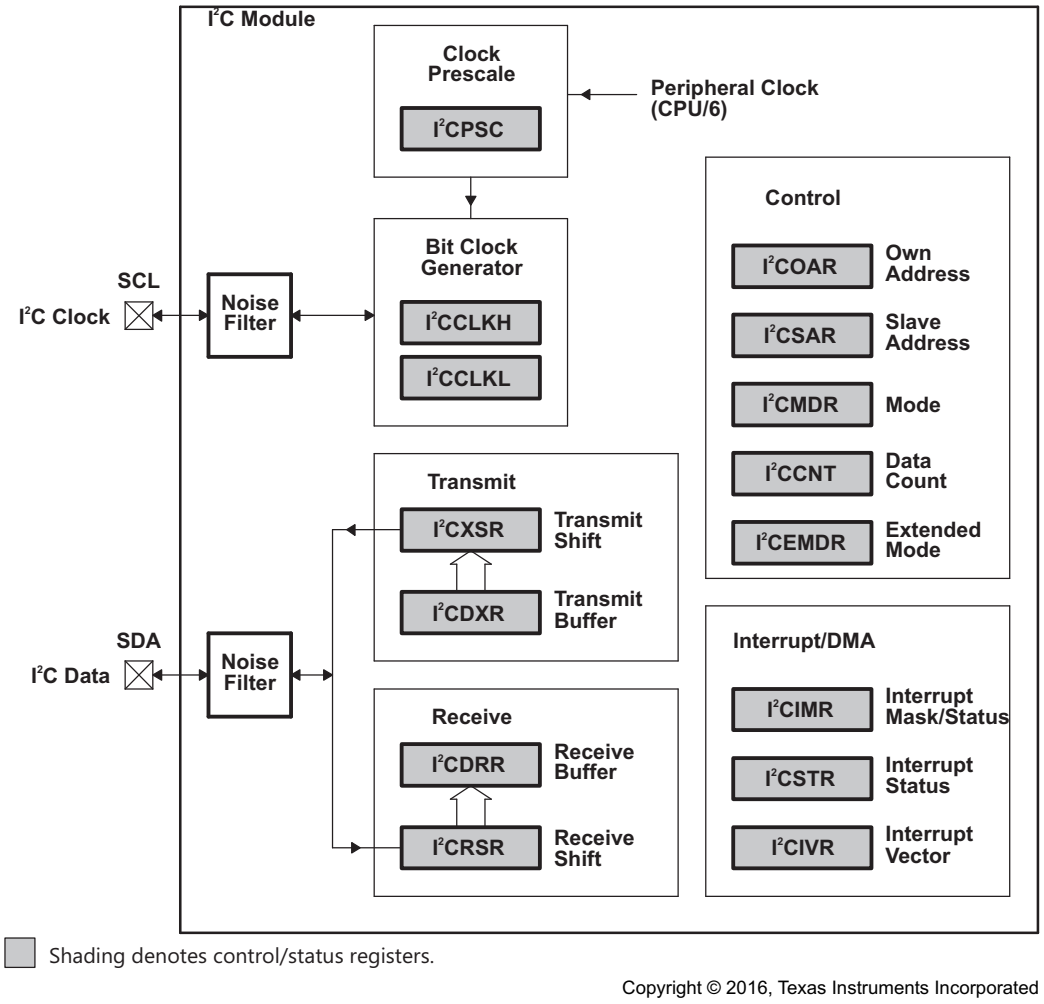

Copyright © 2016, Texas Instruments Incorporated

Figure 11-34. I²C Module Block Diagram

11.10.2 I²C Peripheral Register Description

Table 11-37 lists the I²C registers.

Table 11-37. I²C Registers

HEX ADDRESS OFFSETS	ACRONYM	REGISTER NAME
0x0000	ICOAR	I²C Own Address Register
0x0004	ICIMR	I²C Interrupt Mask/status Register
0x0008	ICSTR	I²C Interrupt Status Register
0x000C	ICCLKL	I²C Clock Low-time Divider Register
0x0010	ICCLKH	I²C Clock High-time Divider Register
0x0014	ICCNT	I²C Data Count Register
0x0018	ICDRR	I²C Data Receive Register
0x001C	ICSAR	I²C Slave Address Register
0x0020	ICDXR	I²C Data Transmit Register
0x0024	ICMDR	I²C Mode Register
0x0028	ICIVR	I²C Interrupt Vector Register
0x002C	ICEMDR	I²C Extended Mode Register
0x0030	ICPSC	I²C Prescaler Register

Table 11-37. I²C Registers (continued)

HEX ADDRESS OFFSETS	ACRONYM	REGISTER NAME
0x0034	ICPID1	I²C Peripheral Identification Register 1 [value: 0x0000 0105]
0x0038	ICPID2	I²C Peripheral Identification Register 2 [value: 0x0000 0005]
0x003C -0x007F	-	Reserved

11.10.3 I²C Electrical Data and Timing

Table 11-38 shows the I²C timing requirements and Table 11-39 shows the I²C switching characteristics.

Table 11-38. I²C Timing Requirements(1)

(see Figure 11-35)

NO.			STANDARD MODE		FAST MODE		UNIT
			MIN	MAX	MIN	MAX	
1	$t_{c(SCL)}$	Cycle time, SCL	10		2.5		µs
2	$t_{su(SCLH-SDAL)}$	Setup time, SCL high before SDA low (for a repeated START condition)	4.7		0.6		µs
3	$t_{h(SDAL-SCLL)}$	Hold time, SCL low after SDA low (for a START and a repeated START condition)	4		0.6		µs
4	$t_{w(SCLL)}$	Pulse duration, SCL low	4.7		1.3		µs
5	$t_{w(SCLH)}$	Pulse duration, SCL high	4		0.6		µs
6	$t_{su(SDAV-SCLH)}$	Setup time, SDA valid before SCL high	250		100(2)		ns
7	$t_{h(SCLL-SDAV)}$	Hold time, SDA valid after SCL low (for I²C bus devices)	0(3)	3.45	0(3)	0.9(4)	µs
8	$t_{w(SDAH)}$	Pulse duration, SDA high between STOP and START conditions	4.7		1.3		µs
9	$t_{r(SDA)}$	Rise time, SDA		1000	20 + 0.1C_b(5)	300	ns
10	$t_{r(SCL)}$	Rise time, SCL		1000	20 + 0.1C_b(5)	300	ns
11	$t_{f(SDA)}$	Fall time, SDA		300	20 + 0.1C_b(5)	300	ns
12	$t_{f(SCL)}$	Fall time, SCL		300	20 + 0.1C_b(5)	300	ns
13	$t_{su(SCLH-SDAH)}$	Setup time, SCL high before SDA high (for STOP condition)	4		0.6		µs
14	$t_{w(SP)}$	Pulse duration, spike (must be suppressed)			0	50	ns
	C_b (5)	Capacitive load for each bus line		400		400	pF

(1) The I²C pins SDA and SCL do not feature fail-safe I/O buffers. These pins could potentially draw current when the device is powered down.
(2) A Fast-mode I²C-bus device can be used in a Standard-mode I²C-bus system, but the requirement tsu(SDA-SCLH) ≥ 250 ns must then be met. This will automatically be the case if the device does not stretch the LOW period of the SCL signal. If such a device does stretch the LOW period of the SCL signal, it must output the next data bit to the SDA line t_r max + $t_{su(SDA-SCLH)}$ = 1000 + 250 = 1250 ns (according to the Standard-mode I²C-Bus Specification) before the SCL line is released.
(3) A device must internally provide a hold time of at least 300 ns for the SDA signal (referred to the V_{IHmin} of the SCL signal) to bridge the undefined region of the falling edge of SCL.
(4) The maximum $t_{h(SDA-SCLL)}$ has to be met only if the device does not stretch the low period [$t_{w(SCLL)}$] of the SCL signal.
(5) C_b = total capacitance of one bus line in pF. If mixed with HS-mode devices, faster fall-times are allowed.

Copyright © 2012–2017, Texas Instruments Incorporated

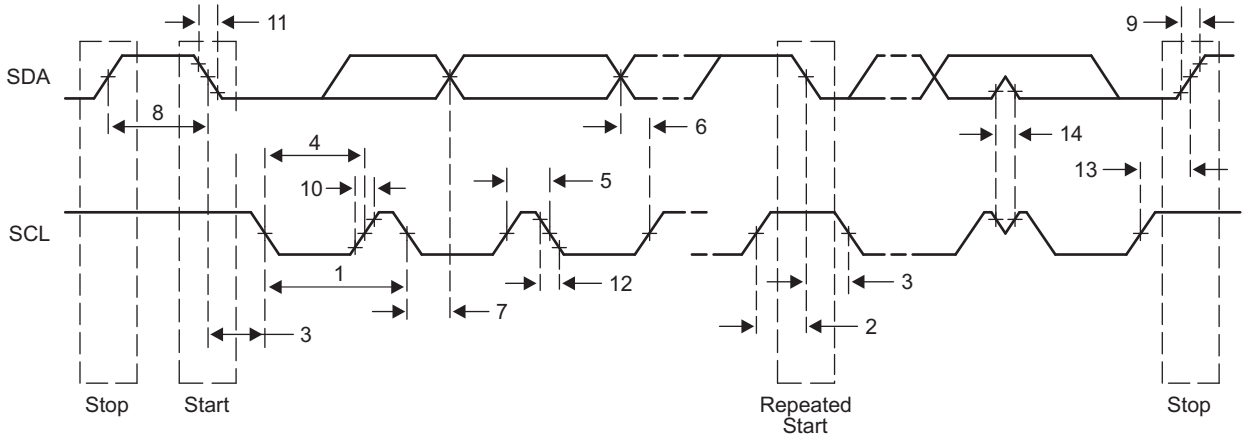

Figure 11-35. I²C Receive Timings

Table 11-39. I²C Switching Characteristics(1)

(see Figure 11-36)

NO.	PARAMETER		STANDARD MODE		FAST MODE		UNIT
			MIN	MAX	MIN	MAX	
16	$t_{c(SCL)}$	Cycle time, SCL	10		2.5		µs
17	$t_{su(SCLH-SDAL)}$	Setup time, SCL high to SDA low (for a repeated START condition)	4.7		0.6		µs
18	$t_{h(SDAL-SCLL)}$	Hold time, SDA low after SCL low (for a START and a repeated START condition)	4		0.6		µs
19	$t_{w(SCLL)}$	Pulse duration, SCL low	4.7		1.3		µs
20	$t_{w(SCLH)}$	Pulse duration, SCL high	4		0.6		µs
21	$t_{d(SDAV-SDLH)}$	Delay time, SDA valid to SCL high	250		100		ns
22	$t_{v(SDLL-SDAV)}$	Valid time, SDA valid after SCL low (for I²C bus devices)	0		0	0.9	µs
23	$t_{w(SDAH)}$	Pulse duration, SDA high between STOP and START conditions	4.7		1.3		µs
24	$t_{r(SDA)}$	Rise time, SDA		1000	$20 + 0.1C_b$ (1)	300	ns
25	$t_{r(SCL)}$	Rise time, SCL		1000	$20 + 0.1C_b$ (1)	300	ns
26	$t_{f(SDA)}$	Fall time, SDA		300	$20 + 0.1C_b$ (1)	300	ns
27	$t_{f(SCL)}$	Fall time, SCL		300	$20 + 0.1C_b$ (1)	300	ns
28	$t_{d(SCLH-SDAH)}$	Delay time, SCL high to SDA high (for STOP condition)	4		0.6		µs
	C_p	Capacitance for each I²C pin		10		10	pF

(1) C_b = total capacitance of one bus line in pF. If mixed with HS-mode devices, faster fall-times are allowed.

Copyright © 2012–2017, Texas Instruments Incorporated

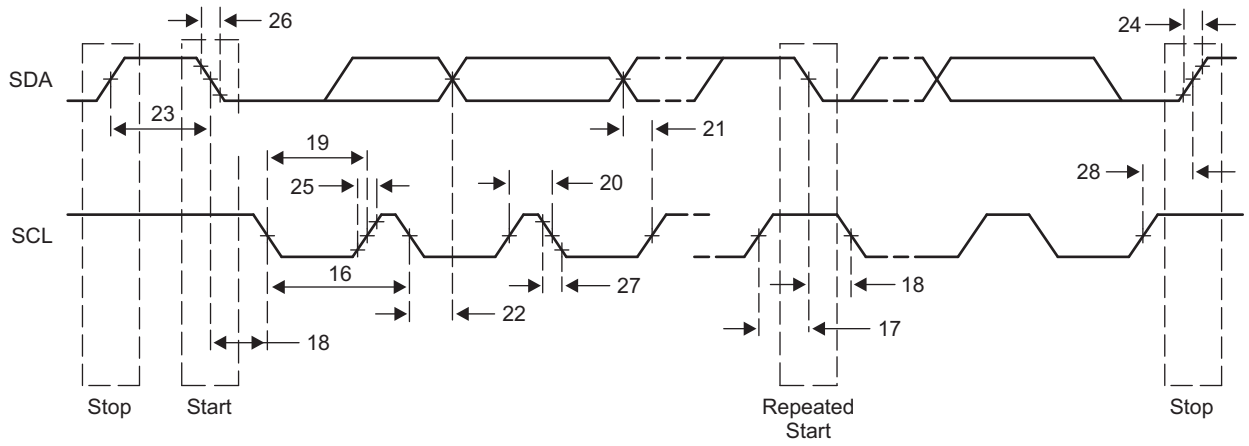

Figure 11-36. I²C Transmit Timings

11.11 SPI Peripheral

The Serial Peripheral Interconnect (SPI) module provides an interface between the SoC and other SPI-compliant devices. The primary intent of this interface is to allow for connection to an SPI ROM for boot. The SPI module on 66AK2Hxx is supported only in master mode. Additional chip-level components can also be included, such as temperature sensors or an I/O expander.

11.11.1 SPI Electrical Data and Timing

Table 11-40 shows the SPI timing requirements and Table 11-41 shows the SPI switching characteristics.

Table 11-40. SPI Timing Requirements

(see Figure 11-37)

NO.			MIN	MAX	UNIT
Master Mode Timing Diagrams — Base Timings for 3 Pin Mode					
7	tsu(SPIDIN-SPC)	Input setup time, SPIDIN valid before receive edge of SPICLK. Polarity = 0 Phase = 0	2		ns
7	tsu(SPIDIN-SPC)	Input setup time, SPIDIN valid before receive edge of SPICLK. Polarity = 0 Phase = 1	2		ns
7	tsu(SPIDIN-SPC)	Input setup time, SPIDIN valid before receive edge of SPICLK. Polarity = 1 Phase = 0	2		ns
7	tsu(SPIDIN-SPC)	Input setup time, SPIDIN valid before receive edge of SPICLK. Polarity = 1 Phase = 1	2		ns
8	th(SPC-SPIDIN)	Input hold time, SPIDIN valid after receive edge of SPICLK. Polarity = 0 Phase = 0	5		ns
8	th(SPC-SPIDIN)	Input hold time, SPIDIN valid after receive edge of SPICLK. Polarity = 0 Phase = 1	5		ns
8	th(SPC-SPIDIN)	Input hold time, SPIDIN valid after receive edge of SPICLK. Polarity = 1 Phase = 0	5		ns
8	th(SPC-SPIDIN)	Input hold time, SPIDIN valid after receive edge of SPICLK. Polarity = 1 Phase = 1	5		ns

Table 11-41. SPI Switching Characteristics

(see Figure 11-37 and Figure 11-38)

NO.	PARAMETER		MIN	MAX	UNIT
Master Mode Timing Diagrams — Base Timings for 3 Pin Mode					
1	tc(SPC)	Cycle time, SPICLK, all master modes	3*P2(1)		ns
2	tw(SPCH)	Pulse width high, SPICLK, all master modes	0.5*(3*P2) – 1		ns
3	tw(SPCL)	Pulse width low, SPICLK, all master modes	0.5*(3*P2) – 1		ns
4	td(SPIDOUT-SPC)	Setup (Delay), initial data bit valid on SPIDOUT to initial edge on SPICLK. Polarity = 0, Phase = 0.		5	ns
4	td(SPIDOUT-SPC)	Setup (Delay), initial data bit valid on SPIDOUT to initial edge on SPICLK. Polarity = 0, Phase = 1.		5	ns

(1) P2=1/(SYSCLK1/6)

Copyright © 2012–2017, Texas Instruments Incorporated

Table 11-41. SPI Switching Characteristics (continued)

(see Figure 11-37 and Figure 11-38)

NO.	PARAMETER		MIN	MAX	UNIT
4	td(SPIDOUT-SPC)	Setup (Delay), initial data bit valid on SPIDOUT to initial edge on SPICLK Polarity = 1, Phase = 0		5	ns
4	td(SPIDOUT-SPC)	Setup (Delay), initial data bit valid on SPIDOUT to initial edge on SPICLK Polarity = 1, Phase = 1		5	ns
5	td(SPC-SPIDOUT)	Setup (Delay), subsequent data bits valid on SPIDOUT to initial edge on SPICLK. Polarity = 0 Phase = 0		2	ns
5	td(SPC-SPIDOUT)	Setup (Delay), subsequent data bits valid on SPIDOUT to initial edge on SPICLK Polarity = 0 Phase = 1		2	ns
5	td(SPC-SPIDOUT)	Setup (Delay), subsequent data bits valid on SPIDOUT to initial edge on SPICLK Polarity = 1 Phase = 0		2	ns
5	td(SPC-SPIDOUT)	Setup (Delay), subsequent data bits valid on SPIDOUT to initial edge on SPICLK Polarity = 1 Phase = 1		2	ns
6	toh(SPC-SPIDOUT)	Output hold time, SPIDOUT valid after receive edge of SPICLK except for final bit. Polarity = 0 Phase = 0	0.5*tc – 2		ns
6	toh(SPC-SPIDOUT)	Output hold time, SPIDOUT valid after receive edge of SPICLK except for final bit. Polarity = 0 Phase = 1	0.5*tc – 2		ns
6	toh(SPC-SPIDOUT)	Output hold time, SPIDOUT valid after receive edge of SPICLK except for final bit. Polarity = 1 Phase = 0	0.5*tc – 2		ns
6	toh(SPC-SPIDOUT)	Output hold time, SPIDOUT valid after receive edge of SPICLK except for final bit. Polarity = 1 Phase = 1	0.5*tc – 2		ns
Additional SPI Master Timings — 4 Pin Mode with Chip Select Option					
19	td(SCS-SPC)	Delay from SPISCSx\ active to first SPICLK. Polarity = 0 Phase = 0	2*P2 – 5	2*P2 + 5	ns
19	td(SCS-SPC)	Delay from SPISCSx\ active to first SPICLK. Polarity = 0 Phase = 1	0.5*tc + (2*P2) – 5	0.5*tc + (2*P2) + 5	ns
19	td(SCS-SPC)	Delay from SPISCSx\ active to first SPICLK. Polarity = 1 Phase = 0	2*P2 – 5	2*P2 + 5	ns
19	td(SCS-SPC)	Delay from SPISCSx\ active to first SPICLK. Polarity = 1 Phase = 1	0.5*tc + (2*P2) – 5	0.5*tc + (2*P2) + 5	ns
20	td(SPC-SCS)	Delay from final SPICLK edge to master deasserting SPISCSx\. Polarity = 0 Phase = 0	1*P2 – 5	1*P2 + 5	ns
20	td(SPC-SCS)	Delay from final SPICLK edge to master deasserting SPISCSx\. Polarity = 0 Phase = 1	0.5*tc + (1*P2) – 5	0.5*tc + (1*P2) + 5	ns
20	td(SPC-SCS)	Delay from final SPICLK edge to master deasserting SPISCSx\. Polarity = 1 Phase = 0	1*P2 – 5	1*P2 + 5	ns
20	td(SPC-SCS)	Delay from final SPICLK edge to master deasserting SPISCSx\. Polarity = 1 Phase = 1	0.5*tc + (1*P2) – 5	0.5*tc + (1*P2) + 5	ns
	tw(SCSH)	Minimum inactive time on SPISCSx\ pin between two transfers when SPISCSx\ is not held using the CSHOLD feature.	2*P2 – 5		ns

Copyright © 2012–2017, Texas Instruments Incorporated

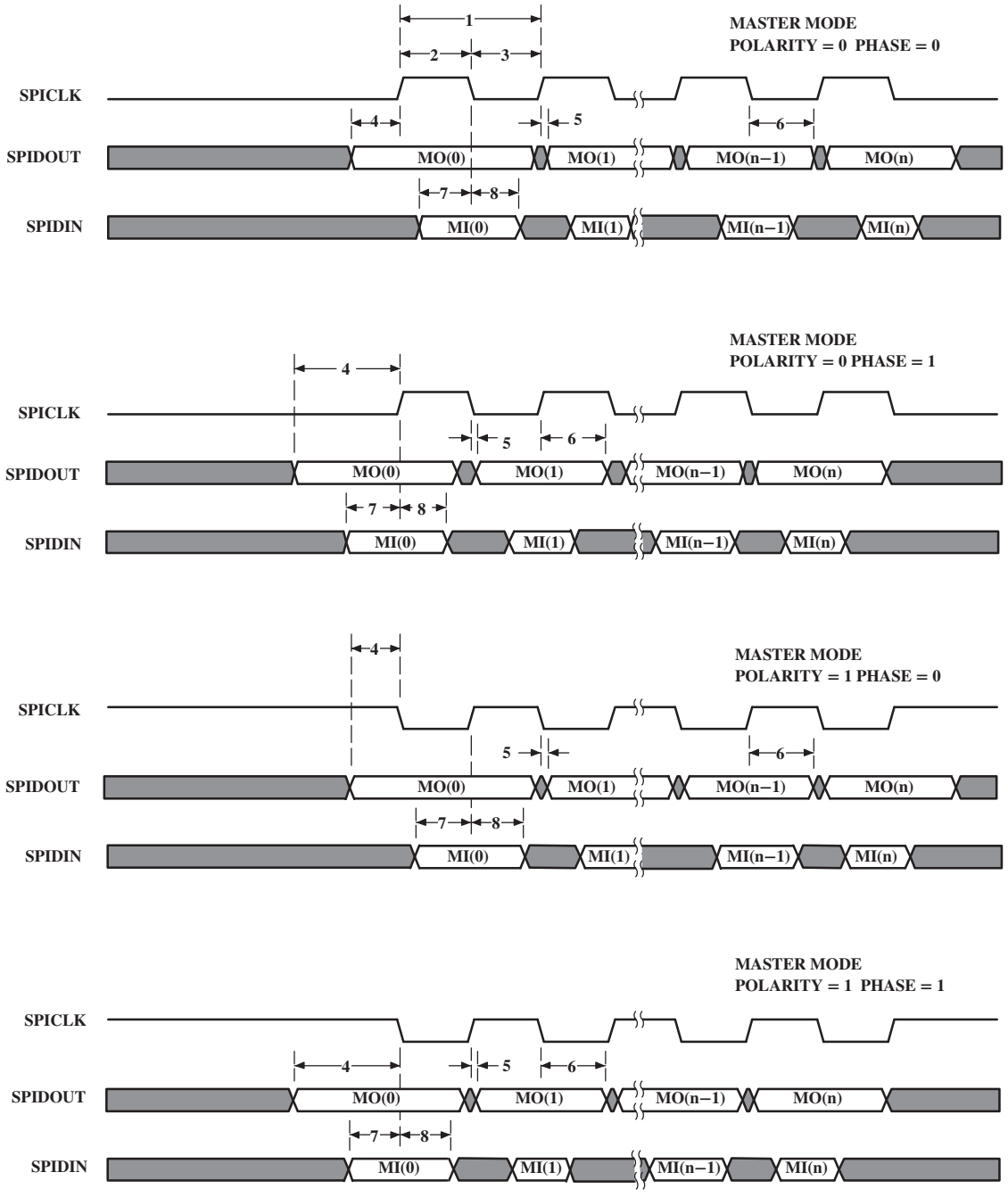

Figure 11-37. SPI Master Mode Timing Diagrams — Base Timings for 3-Pin Mode

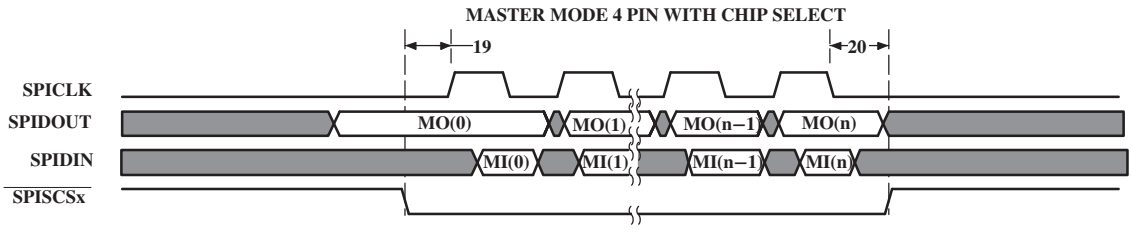

Figure 11-38. SPI Additional Timings for 4-Pin Master Mode with Chip Select Option

Copyright © 2012–2017, Texas Instruments Incorporated

11.12 HyperLink Peripheral

The 66AK2Hxx includes HyperLinks for companion device interfaces. This is a four-lane SerDes interface designed to operate at up to 10 Gbps per lane from pin-to-pin. The interface is used to connect with external accelerators that are manufactured using TI libraries. The HyperLink lines must be connected with DC coupling.

The interface includes the serial station management interfaces used to send power management and flow messages between devices. Each HyperLink interface consists of four LVCMOS inputs and four LVCMOS outputs configured as two 2-wire input buses and two 2-wire output buses. Each 2-wire bus includes a data signal and a clock signal.

Table 11-42 shows the Hyperlink timing requirements and Table 11-43 shows the Hyperlink switching characteristics.

Table 11-42. HyperLink Peripheral Timing Requirements

(see Figure 11-39, Figure 11-40, and Figure 11-41)

NO.			MIN	MAX	UNIT
FL Interface					
1	tc(HYPTXFLCLK)	Clock period – HYPTXFLCLK (C1)	5.75		ns
2	tw(HYPTXFLCLKH)	High pulse width – HYPTXFLCLK	0.4*C1	0.6*C1	ns
3	tw(HYPTXFLCLKL)	Low pulse width – HYPTXFLCLK	0.4*C1	0.6*C1	ns
6	tsu(HYPTXFLDAT-HYPTXFLCLKH)	Setup time – HYPTXFLDAT valid before HYPTXFLCLK high	1		ns
7	th(HYPTXFLCLKH-HYPTXFLDAT)	Hold time – HYPTXFLDAT valid after HYPTXFLCLK high	1		ns
6	tsu(HYPTXFLDAT-HYPTXFLCLKL)	Setup time – HYPTXFLDAT valid before HYPTXFLCLK low	1		ns
7	th(HYPTXFLCLKL-HYPTXFLDAT)	Hold time – HYPTXFLDAT valid after HYPTXFLCLK low	1		ns
PM Interface					
1	tc(HYPRXPMCLK)	Clock period – HYPRXPMCLK (C3)	5.75		ns
2	tw(HYPRXPMCLK)	High pulse width – HYPRXPMCLK	0.4*C3	0.6*C3	ns
3	tw(HYPRXPMCLK)	Low pulse width – HYPRXPMCLK	0.4*C3	0.6*C3	ns
6	tsu(HYPRXPMDAT-HYPRXPMCLKH)	Setup time – HYPRXPMDAT valid before HYPRXPMCLK high	1		ns
7	th(HYPRXPMCLKH-HYPRXPMDAT)	Hold time – HYPRXPMDAT valid after HYPRXPMCLK high	1		ns
6	tsu(HYPRXPMDAT-HYPRXPMCLKL)	Setup time – HYPRXPMDAT valid before HYPRXPMCLK low	1		ns
7	th(HYPRXPMCLKL-HYPRXPMDAT)	Hold time – HYPRXPMDAT valid after HYPRXPMCLK low	1		ns

Table 11-43. HyperLink Peripheral Switching Characteristics

(see Figure 11-39, Figure 11-40, and Figure 11-41)

NO.	PARAMETER		MIN	MAX	UNIT
FL Interface					
1	tc(HYPRXFLCLK)	Clock period – HYPRXFLCLK (C2)	6.4		ns
2	tw(HYPRXFLCLKH)	High pulse width – HYPRXFLCLK	0.4*C2	0.6*C2	ns
3	tw(HYPRXFLCLKL)	Low pulse width – HYPRXFLCLK	0.4*C2	0.6*C2	ns
4	tosu(HYPRXFLDAT-HYPRXFLCLKH)	Setup time – HYPRXFLDAT valid before HYPRXFLCLK high	0.25*C2-0.4		ns
5	toh(HYPRXFLCLKH-HYPRXFLDAT)	Hold time – HYPRXFLDAT valid after HYPRXFLCLK high	0.25*C2-0.4		ns
4	tosu(HYPRXFLDAT-HYPRXFLCLKL)	Setup time – HYPRXFLDAT valid before HYPRXFLCLK low	0.25*C2-0.4		ns
5	toh(HYPRXFLCLKL-HYPRXFLDAT)	Hold time – HYPRXFLDAT valid after HYPRXFLCLK low	0.25*C2-0.4		ns
PM Interface					

Copyright © 2012–2017, Texas Instruments Incorporated

Table 11-43. HyperLink Peripheral Switching Characteristics (continued)

(see Figure 11-39, Figure 11-40, and Figure 11-41)

NO.	PARAMETER		MIN	MAX	UNIT
1	tc(HYPTXPMCLK)	Clock period – HYPTXPMCLK (C4)	6.4		ns
2	tw(HYPTXPMCLK)	High pulse width – HYPTXPMCLK	0.4*C4	0.6*C4	ns
3	tw(HYPTXPMCLK)	Low pulse width – HYPTXPMCLK	0.4*C4	0.6*C4	ns
4	tosu(HYPTXPMDAT-HYPTXPMCLKH)	Setup time – HYPTXPMDAT valid before HYPTXPMCLK high	0.25*C2-0.4		ns
5	toh(HYPTXPMCLKH-HYPTXPMDAT)	Hold time – HYPTXPMDAT valid after HYPTXPMCLK high	0.25*C2-0.4		ns
4	tosu(HYPTXPMDAT-HYPTXPMCLKL)	Setup time – HYPTXPMDAT valid before HYPTXPMCLK low	0.25*C2-0.4		ns
5	toh(HYPTXPMCLKL-HYPTXPMDAT)	Hold time – HYPTXPMDAT valid after HYPTXPMCLK low	0.25*C2-0.4		ns

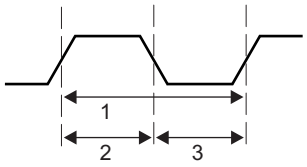

Figure 11-39. HyperLink Station Management Clock Timing

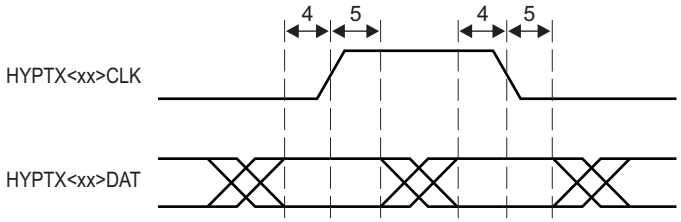

<xx> represents the interface that is being used: PM or FL

Figure 11-40. HyperLink Station Management Transmit Timing

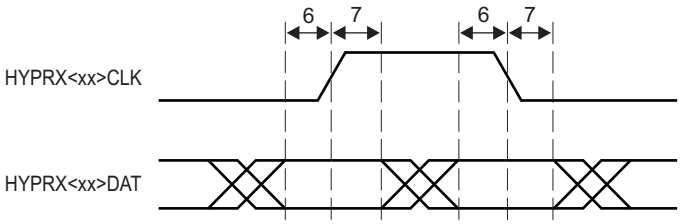

<xx> represents the interface that is being used: PM or FL

Figure 11-41. HyperLink Station Management Receive Timing

Copyright © 2012–2017, Texas Instruments Incorporated

11.13 UART Peripheral

The universal asynchronous receiver/transmitter (UART) module provides an interface between the device and a UART terminal interface or other UART-based peripheral. The UART is based on the industry standard TL16C550 asynchronous communications element which, in turn, is a functional upgrade of the TL16C450. Functionally similar to the TL16C450 on power up (single character or TL16C450 mode), the UART can be placed in an alternate FIFO (TL16C550) mode. This relieves the SoC of excessive software overhead by buffering received and transmitted characters. The receiver and transmitter FIFOs store up to 16 bytes including three additional bits of error status per byte for the receiver FIFO.

The UART performs serial-to-parallel conversions on data received from a peripheral device and parallel-to-serial conversion on data received from the C66x CorePac to be sent to the peripheral device. The C66x CorePac can read the UART status at any time. The UART includes control capability and a processor interrupt system that can be tailored to minimize software management of the communications link. For more information on UART, see the *KeyStone Architecture Universal Asynchronous Receiver/Transmitter (UART) User's Guide*.

Table 11-44 shows the UART timing requirements and Table 11-45 shows the UART switching characteristics.

Table 11-44. UART Timing Requirements

(see Figure 11-42 and Figure 11-43)

NO.			MIN	MAX	UNIT
Receive Timing					
4	tw(RXSTART)	Pulse width, receive start bit	0.96U(1)	1.05U	ns
5	tw(RXH)	Pulse width, receive data/parity bit high	0.96U	1.05U	ns
5	tw(RXL)	Pulse width, receive data/parity bit low	0.96U	1.05U	ns
6	tw(RXSTOP1)	Pulse width, receive stop bit 1	0.96U	1.05U	ns
6	tw(RXSTOP15)	Pulse width, receive stop bit 1.5	0.96U	1.05U	ns
6	tw(RXSTOP2)	Pulse width, receive stop bit 2	0.96U	1.05U	ns
Autoflow Timing Requirements					
8	td(CTSL-TX)	Delay time, CTS asserted to START bit transmit	P(2)	5P	ns

(1) U = UART baud time = 1/programmed baud rate
(2) P = 1/(SYSCLK1/6)

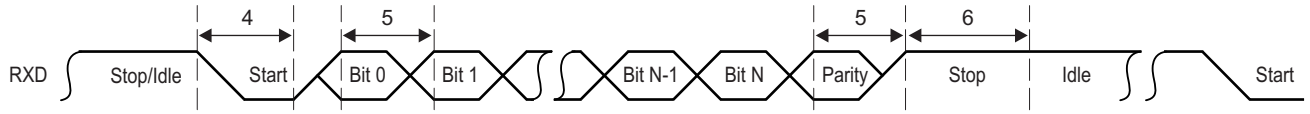

Figure 11-42. UART Receive Timing Waveform

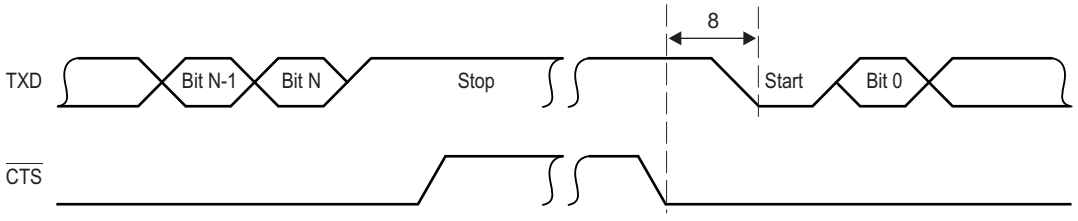

Figure 11-43. UART CTS (Clear-to-Send Input) — Autoflow Timing Waveform

Table 11-45. UART Switching Characteristics

(see Figure 11-44 and Figure 11-45)

NO.	PARAMETER		MIN	MAX	UNIT
Transmit Timing					
1	tw(TXSTART)	Pulse width, transmit start bit	U(1) - 2	U + 2	ns
2	tw(TXH)	Pulse width, transmit data/parity bit high	U – 2	U + 2	ns
2	tw(TXL)	Pulse width, transmit data/parity bit low	U – 2	U + 2	ns
3	tw(TXSTOP1)	Pulse width, transmit stop bit 1	U – 2	U + 2	ns
3	tw(TXSTOP15)	Pulse width, transmit stop bit 1.5	1.5 × (U – 2)	1.5 × ('U + 2)	ns
3	tw(TXSTOP2)	Pulse width, transmit stop bit 2	2 × (U – 2)	2 × ('U + 2)	ns
Autoflow Timing Requirements					
7	td(RX-RTSH)	Delay time, STOP bit received to RTS deasserted	P(2)	5P	ns

(1) U = UART baud time = 1/programmed baud rate
(2) P = 1/(SYSCLK1/6)

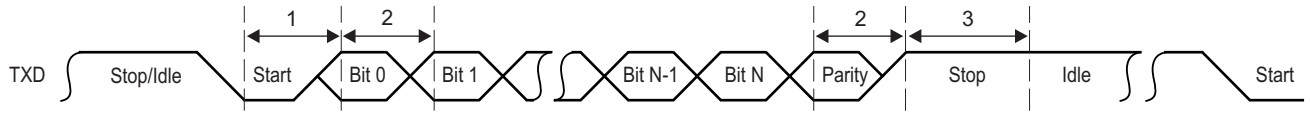

Figure 11-44. UART Transmit Timing Waveform

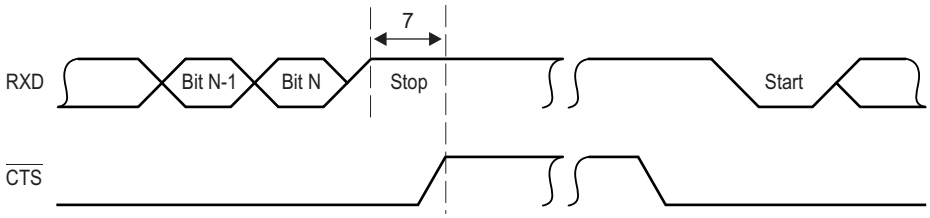

Figure 11-45. UART RTS (Request-to-Send Output) – Autoflow Timing Waveform

11.14 PCIe Peripheral

The two-lane PCI express (PCIe) module on 66AK2Hxx provides an interface between the device and other PCIe-compliant devices. The PCIe module provides low pin-count, high-reliability, and high-speed data transfer at rates up to 5.0 Gbps per lane on the serial links. For more information, see the *KeyStone Architecture Peripheral Component Interconnect Express (PCIe) User's Guide*.

11.15 Packet Accelerator

The Packet Accelerator (PA) provides L2 to L4 classification functionalities and supports classification for Ethernet, VLAN, MPLS over Ethernet, IPv4/6, GRE over IP, and other session identification over IP such as UDP ports. It maintains 8k multiple-in, multiple-out hardware queues and also provides checksum capability as well as some QoS capabilities. The PA enables a single IP address to be used for a multicore device and can process up to 1.5 Mpps. The Packet Accelerator is coupled with the Network Coprocessor. For more information, see the *KeyStone Architecture Packet Accelerator (PA) User's Guide*.

Copyright © 2012–2017, Texas Instruments Incorporated

11.16 Security Accelerator

The Security Accelerator (SA) provides wire-speed processing on 1 Gbps Ethernet traffic on IPSec, SRTP, and 3GPP Air interface security protocols. It functions on the packet level with the packet and the associated security context being one of the above three types. The Security Accelerator is coupled with the Network Coprocessor, and receives the packet descriptor containing the security context in the buffer descriptor and the data to be encrypted/decrypted in the linked buffer descriptor. For more information, see the *KeyStone Architecture Security Accelerator (SA) User's Guide* .

11.17 Network Coprocessor Gigabit Ethernet (GbE) Switch Subsystem

The gigabit Ethernet (GbE) switch subsystem provides an efficient interface between the device and the networked community. The Ethernet Media Access Controller (EMAC) supports 10Base-T (10 Mbits/second), and 100BaseTX (100 Mbps), in half- or full-duplex mode, and 1000BaseT (1000 Mbps) in full-duplex mode, with hardware flow control and quality-of-service (QOS) support. The GbE switch subsystem is coupled with the Network Coprocessor. For more information, see the *Gigabit Ethernet (GbE) Switch Subsystem (1 GB) User's Guide*.

An address range is assigned to the 66AK2Hxx. Each individual device has a 48-bit MAC address and consumes only one unique MAC address out of the range. There are two registers to hold these values, MACID1[31:0] (32 bits) and MACID2[15:0] (16 bits). The MACID1 and MACID2 registers are shown in Figure 11-46 and Figure 11-47 and described in Table 11-46 and Table 11-47.

Figure 11-46. MACID1 Register (MMR Address 0x02620110)

31	30	29	28	27	26	25	24	23	22	21	20	19	18	17	16	15	14	13	12	11	10	9	8	7	6	5	4	3	2	1	0
MACID																															
R,+xxxx xxxx xxxx xxxx xxxx xxxx xxxx xxxx																															

Legend: R = Read only; -x, value is indeterminate

Table 11-46. MACID1 Register Field Descriptions

Bit	Field	Description
31-0	MAC ID	MAC ID. Lower 32 bits.

Figure 11-47. MACID2 Register (MMR Address 0x02620114)

31	30	29	28	27	26	25	24	23	22	21	20	19	18	17	16	15	14	13	12	11	10	9	8	7	6	5	4	3	2	1	0
CRC								Reserved						FLOW	BCAST	MACID															
R+,cccc cccc								R,+rr rrrr						R,+z	R,+y	R,+xxxx xxxx xxxx xxxx													

LEGEND: R = Read only; -x = value is indeterminate

Table 11-47. MACID2 Register Field Descriptions

Bit	Field	Description
31-24	CRC	Variable
23-18	Reserved	000000
17	FLOW	MAC Flow Control • 0 = Off • 1 = On
16	BCAST	Default m/b-cast reception • 0 = Broadcast • 1 = Disabled
15-0	MAC ID	MAC ID. Upper 16 bits.

Copyright © 2012–2017, Texas Instruments Incorporated

There is a central processor time synchronization (CPTS) submodule in the Ethernet switch module that can be used for time synchronization. Programming this register selects the clock source for the CPTS_RCLK. See the *Gigabit Ethernet (GbE) Switch Subsystem (1 GB) User's Guide* for the register address and other details about the time synchronization submodule. The register CPTS_RFTCLK_SEL for reference clock selection of the time synchronization submodule is shown in Figure 11-48 and described in Table 11-48.

Figure 11-48. RFTCLK Select Register (CPTS_RFTCLK_SEL)

31	30	29	28	27	26	25	24	23	22	21	20	19	18	17	16	15	14	13	12	11	10	9	8	7	6	5	4	3	2	1	0
Reserved																												CPTS_RFTCLK_SEL			
R-0																												RW-0			

Legend: R = Read only; -x, value is indeterminate

Table 11-48. RFTCLK Select Register Field Descriptions

Bit	Field	Description
31-4	Reserved	Reserved. Read as 0.
3-0	CPTS_RFTCLK_SEL	Reference clock select. This signal is used to control an external multiplexer that selects one of 8 clocks for time sync reference (RFTCLK). This CPTS_RFTCLK_SEL value can be written only when the CPTS_EN bit is cleared to 0 in the TS_CTL register. • 0000 = SYSCLK2 • 0001 = SYSCLK3 • 0010 = TIMI0 • 0011 = TIMI1 • 1000 = TSREFCLK • Others = Reserved

11.18 SGMII and XFI Management Data Input/Output (MDIO)

The management data input/output (MDIO) module implements the 802.3 serial management interface to interrogate and control up to 32 Ethernet PHY(s) connected to the device, using a shared two-wire bus. Application software uses the MDIO module to configure the auto-negotiation parameters of each PHY attached to the EMAC, retrieve the negotiation results, and configure required parameters in the gigabit Ethernet (GbE) and 10-gigabit Ethernet (10GbE) switch subsystems for correct operation. The module allows almost transparent operation of the MDIO interface, with very little attention from the SoC. For more information, see the *Gigabit Ethernet (GbE) Switch Subsystem (1 GB) User's Guide* and the *KeyStone II Architecture 10 Gigabit Ethernet Subsystem User's Guide*.

The MDIO timing requirements are shown in Table 11-49 and the MDIO switching characteristics are shown in Table 11-50.

Table 11-49. MDIO Timing Requirements

(see Figure 11-49)

NO.			MIN	MAX	UNIT
1	tc(MDCLK)	Cycle time, MDCLK	400		ns
2	tw(MDCLKH)	Pulse duration, MDCLK high	180		ns
3	tw(MDCLKL)	Pulse duration, MDCLK low	180		ns
4	tsu(MDIO-MDCLKH)	Setup time, MDIO data input valid before MDCLK high	10		ns
5	th(MDCLKH-MDIO)	Hold time, MDIO data input valid after MDCLK high	10		ns
	tt(MDCLK)	Transition time, MDCLK		5	ns

Copyright © 2012–2017, Texas Instruments Incorporated

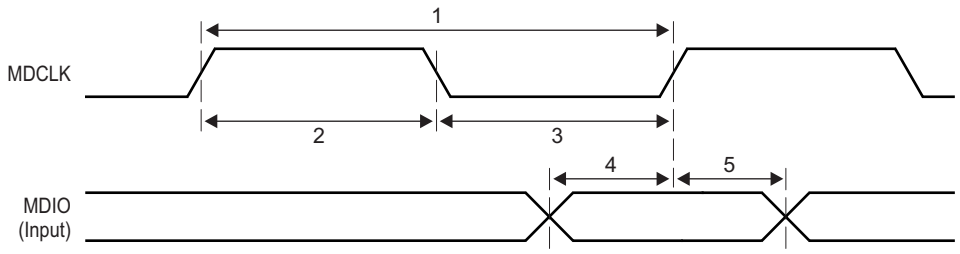

Figure 11-49. MDIO Input Timing

Table 11-50. MDIO Switching Characteristics

(see Figure 11-50)

NO.	PARAMETER		MIN	MAX	UNIT
6	td(MDCLKH-MDIO)	Delay time, MDCLK high to MDIO data output valid	10	300	ns
7	th(MDCLKH-MDIO)	Hold time, MDIO data output valid after MDCLK high	10		ns
8	td(MDCLKH-MDIO)	Delay time, MDCLK high to MDIO Hi-Z	10	300	ns

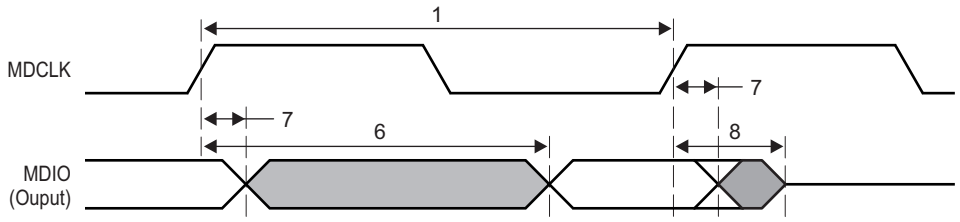

Figure 11-50. MDIO Output Timing

11.19 Ten-Gigabit Ethernet (10GbE) Switch Subsystem

The 3-port Ten Gigabit Ethernet Switch Subsystem (different from the Network Coprocessor integrated switch) includes a stand-alone EMAC switch subsystem and a 2-lane SerDes macro. The 2-lane macro enables only 2 external ports. It does not include any packet acceleration or security acceleration engine.

11.19.1 10GbE Supported Features

The key features of the 10GbE module are listed below:

- 10 Gbps EMAC switch subsystem
  - MDIO: Media-dependent input/output module
  - SGMII Interface for 10/100/1000 and 10GBASE-KR for 10G
  - Ethernet switch with wire-rate switching (only two external ports are supported by the SerDes)
  - CPTS module that supports time-stamping for IEEE 1588v2 with support for eight hardware push events and generation of compare output pulses
  - Supports XFI electrical interface
- CPDMA

The CPDMA component provides CPPI 4.2 compatible functionality, and provides a 128-bit-wide data path to the TeraNet, enabling:

- Support for 8 transmit channel and 16 receive channels
- Support for reset isolation option

For more information, see the *KeyStone II Architecture 10 Gigabit Ethernet Subsystem User's Guide*.

11.20 Timers

The timers can be used to time events, count events, generate pulses, interrupt the CorePacs, and send synchronization events to the EDMA3 channel controller.

11.20.1 Timers Device-Specific Information

The 66AK2Hxx device has up to twenty 64-bit timers in total, (66AK2H12 has 20 timers and the 66AK2H06 has 14) of which Timer0 through Timer3 (66AK2H06) or Timer7 (66AK2H12) are dedicated to each of the up to eight C66x CorePacs as watchdog timers and can also be used as general-purpose timers. Timer16 and Timer17 (66AK2H06) or (66AK2H12).Timer16 through Timer19 are dedicated to each of the Cortex-A15 processor cores as a watchdog timer and can also be used as general-purpose timers. The remaining timers can be configured as general-purpose timers only, with each timer programmed as a 64-bit timer or as two separate 32-bit timers.

When operating in 64-bit mode, the timer counts either module clock cycles or input (TINPLx) pulses (rising edge) and generates an output pulse/waveform (TOUTLx) plus an internal event (TINTLx) on a software-programmable period. When operating in 32-bit mode, the timer is split into two independent 32-bit timers. Each timer is made up of two 32-bit counters: a high counter and a low counter. The timer pins, TINPLx and TOUTLx are connected to the low counter. The timer pins, TINPHx and TOUTHx are connected to the high counter. The module clock for each timer module is SYSCLK1, with a shared local divider (not programmable) of /6 (timer module clock frequency = SYSCLK1/6). Refer to Table 11-13.

When operating in watchdog mode, the timer counts down to 0 and generates an event. It is a requirement that software writes to the timer before the count expires, after which the count begins again. If the count ever reaches 0, the timer event output is asserted. Reset initiated by a watchdog timer can be set by programming the Reset Type Status register (RSTYPE) (see Section 11.5.2.6) and the type of reset initiated can set by programming the Reset Configuration register (RSTCFG) (see Section 11.5.2.8). For more information, see the *KeyStone Architecture Timer 64P User's Guide*.

11.20.2 Timers Electrical Data and Timing

Table 11-51 and Table 11-52 list timing requirements and switching characteristics of the timers.

Copyright © 2012–2017, Texas Instruments Incorporated

Table 11-51. Timer Input Timing Requirements(1)

(see Figure 11-51)

NO.			MIN	MAX	UNIT
1	$t_{w(TINPH)}$	Pulse duration, high	12C		ns
2	$t_{w(TINPL)}$	Pulse duration, low	12C		ns

(1) C = 1/SYSCLK1 clock frequency in ns

Table 11-52. Timer Output Switching Characteristics(1)

(see Figure 11-51)

NO.	PARAMETER		MIN	MAX	UNIT
3	$t_{w(TOUTH)}$	Pulse duration, high	12C – 3		ns
4	$t_{w(TOUTL)}$	Pulse duration, low	12C – 3		ns

(1) C = 1/SYSCLK1 clock frequency in ns.

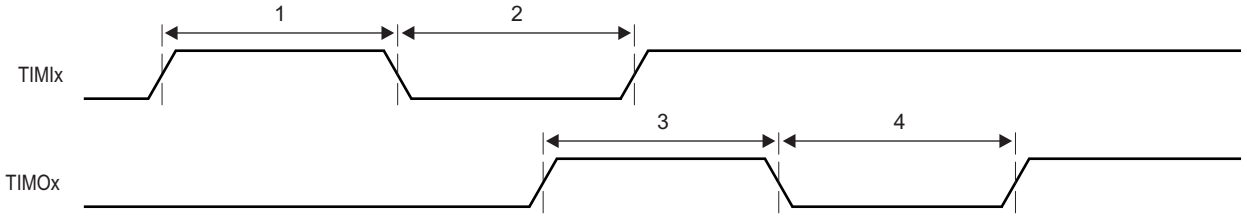

Figure 11-51. Timer Timing

11.21 Serial RapidIO (SRIO) Port

The SRIO port on the device is a high-performance, low pin-count SerDes interconnect. SRIO interconnects in a baseband board design provide connectivity and control among the components. The device supports four 1× Serial RapidIO links or one 4× Serial RapidIO link. The SRIO interface is designed to operate at a data rate of up to 5 Gbps per differential pair. This equals 20 raw GBaud/s for the 4× SRIO port, or approximately 15 Gbps data throughput rate.

The PHY part of the SRIO consists of the physical layer and includes the input and output buffers (each serial link consists of a differential pair), the 8-bit/10-bit encoder/decoder, the PLL clock recovery, and the parallel-to-serial/serial-to-parallel converters.

For more information, see the *KeyStone Architecture Serial RapidIO (SRIO) User's Guide*.

11.21.1 Serial RapidIO Device-Specific Information

The approach to specifying interface timing for the SRIO Port is different from other interfaces. For these other interfaces, the device timing was specified in terms of data manual specifications and I/O buffer information specification (IBIS) models.

The Serial RapidIO peripheral is a master peripheral in the device. It conforms to the *RapidIO™ Interconnect Specification, Part VI: Physical Layer 1×/4× LP-Serial Specification*, Revision 1.3.

For the SRIO port, Texas Instruments provides a PCB solution showing two TI SRIO-enabled DSPs connected together via a 4× SRIO link. TI has performed the simulation and system characterization to ensure all SRIO interface timings in this solution are met.

NOTE

TI supports only designs that follow the board design guidelines outlined in the *RapidIO™ Interconnect Specification, Part VI: Physical Layer 1×/4× LP-Serial Specification*, Revision 1.3.

Copyright © 2012–2017, Texas Instruments Incorporated

11.22 General-Purpose Input/Output (GPIO)

11.22.1 GPIO Device-Specific Information

The GPIO peripheral pins are used for general-purpose input/output for the device. These pins are also used to configure the device at boot time.

For more detailed information on device/ and peripheral configuration and the 66AK2Hxx device pin multiplexing, see Section 10.2.

These GPIO pins can also be used to generate individual core interrupts (no support of bank interrupt) and EDMA events.

11.22.2 GPIO Peripheral Register Description

Table 11-53 lists the GPIO registers.

Table 11-53. GPIO Registers

HEX ADDRESS OFFSETS	ACRONYM	REGISTER NAME
0x0008	BINTEN	GPIO interrupt per bank enable register
0x000C	-	Reserved
0x0010	DIR	GPIO Direction Register
0x0014	OUT_DATA	GPIO Output Data Register
0x0018	SET_DATA	GPIO Set Data Register
0x001C	CLR_DATA	GPIO Clear Data Register
0x0020	IN_DATA	GPIO Input Data Register
0x0024	SET_RIS_TRIG	GPIO Set Rising Edge Interrupt Register
0x0028	CLR_RIS_TRIG	GPIO Clear Rising Edge Interrupt Register
0x002C	SET_FAL_TRIG	GPIO Set Falling Edge Interrupt Register
0x0030	CLR_FAL_TRIG	GPIO Clear Falling Edge Interrupt Register
0x008C	-	Reserved
0x0090 – 0x03FF	-	Reserved

11.22.3 GPIO Electrical Data and Timing

The GPIO input timing requirements are shown in Table 11-54 and the GPIO output switching characteristics are shown in Table 11-55.

Table 11-54. GPIO Input Timing Requirements(1)

(see Figure 11-52)

NO.			MIN	MAX	UNIT
1	$t_{w(GPOH)}$	Pulse duration, GPOx high	12C		ns
2	$t_{w(GPOL)}$	Pulse duration, GPOx low	12C		ns

(1) C = 1/SYSCLK1 clock frequency in ns

Table 11-55. GPIO Output Switching Characteristics(1)

(see Figure 11-52)

NO.	PARAMETER		MIN	MAX	UNIT
3	$t_{w(GPOH)}$	Pulse duration, GPOx high	36C – 8		ns
4	$t_{w(GPOL)}$	Pulse duration, GPOx low	36C – 8		ns

(1) C = 1/SYSCLK1 clock frequency in ns

Copyright © 2012–2017, Texas Instruments Incorporated

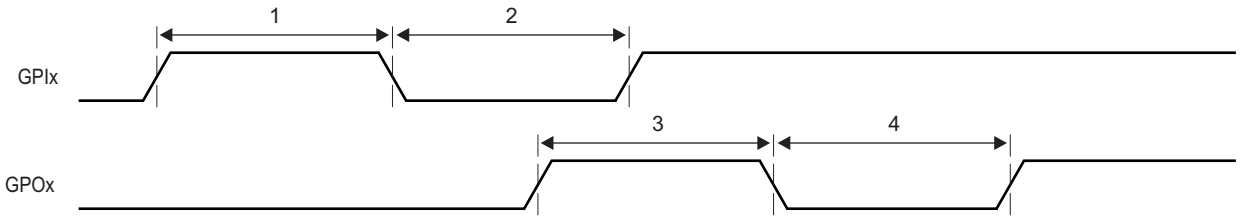

Figure 11-52. GPIO Timing

11.23 Semaphore2

The device contains an enhanced Semaphore module for the management of shared resources of the SoC. The Semaphore enforces atomic accesses to shared chip-level resources so that the read-modify-write sequence is not broken. The Semaphore module has unique interrupts to each of the CorePacs to identify when that CorePac has acquired the resource.

Semaphore resources within the module are not tied to specific hardware resources. It is a software requirement to allocate semaphore resources to the hardware resources to be arbitrated.

The Semaphore module supports all the CPUs in the device—12 for 66AK2H14 and 66AK2H12 devices, and 6 for 66AK2H06 devices—and contains 64 semaphores that can be shared within the system.

There are two methods of accessing a semaphore resource:

- **Direct Access:** A C66x CorePac directly accesses a semaphore resource. If free, the semaphore is granted. If not free, the semaphore is not granted.
- **Indirect Access:** A C66x CorePac indirectly accesses a semaphore resource by writing to it. Once the resource is free, an interrupt notifies the C66x CorePac that the resource is available.

11.24 Universal Serial Bus 3.0 (USB 3.0)

The device includes a USB 3.0 controller providing the following capabilities:

- Support of USB 3.0 peripheral (or device) mode at the following speeds:
  - Super Speed (SS) (5 Gbps)
  - High Speed (HS) (480 Mbps)
  - Full Speed (FS) (12 Mbps)
- Support of USB 3.0 host mode at the following speeds:
  - Super Speed (SS) (5 Gbps)
  - High Speed (HS) (480 Mbps)
  - Full Speed (FS) (12 Mbps)
  - Low Speed (LS) (1.5 Mbps)
- Integrated DMA controller with extensible Host Controller Interface (xHCI) support
- Support for 14 transmit and 14 receive endpoints plus control EP0

For more information, see the *KeyStone II Architecture Universal Serial Bus 3.0 (USB 3.0) User's Guide*.

11.25 EMIF16 Peripheral

The EMIF16 module provides an interface between the device and external memories such as NAND and NOR flash. For more information, see the *KeyStone Architecture External Memory Interface (EMIF16) User's Guide*.

Copyright © 2012–2017, Texas Instruments Incorporated

11.25.1 EMIF16 Electrical Data and Timing

EMIF16 asynchronous memory timing requirements are shown in Table 11-56.

Table 11-56. EMIF16 Asynchronous Memory Timing Requirements(1)

(see Figure 11-53, Figure 11-54, Figure 11-55, and Figure 11-56)

NO.			MIN	MAX	UNIT
General Timing					
2	t_w(WAIT)	Pulse duration, WAIT assertion and deassertion minimum time		2E	ns
28	t_d(WAIT-WEH)	Setup time, WAIT asserted before WE high		4E + 3	ns
14	t_d(WAIT-OEH)	Setup time, WAIT asserted before OE high		4E + 3	ns
Read Timing					
3	t_C(CEL)	EMIF read cycle time when ew = 0, meaning not in extended wait mode	(RS+RST+RH+3) *E-3	(RS+RST+RH+3) *E+3	ns
3	t_C(CEL)	EMIF read cycle time when ew =1, meaning extended wait mode enabled	(RS+RST+RH+3) *E-3	(RS+RST+RH+3) *E+3	ns
4	t_{osu}(CEL-OEL)	Output setup time from CE low to OE low. SS = 0, not in select strobe mode	(RS+1) × E – 3	(RS+1) × E + 3	ns
5	t_{oh}(OEH-CEH)	Output hold time from OE high to CE high. SS = 0, not in select strobe mode	(RH+1) × E – 3	(RH+1) × E + 3	ns
4	t_{osu}(CEL-OEL)	Output setup time from CE low to OE low in select strobe mode, SS = 1	(RS+1) × E – 3	(RS+1) × E + 3	ns
5	t_{oh}(OEH-CEH)	Output hold time from OE high to CE high in select strobe mode, SS = 1	(RH+1) × E – 3	(RH+1) × E + 3	ns
6	t_{osu}(BAV-OEL)	Output setup time from BA valid to OE low	(RS+1) × E – 3	(RS+1) × E + 3	ns
7	t_{oh}(OEH-BAIV)	Output hold time from OE high to BA invalid	(RH+1) × E – 3	(RH+1) × E + 3	ns
8	t_{osu}(AV-OEL)	Output setup time from A valid to OE low	(RS+1) × E – 3	(RS+1) × E + 3	ns
9	t_{oh}(OEH-AIV)	Output hold time from OE high to A invalid	(RH+1) × E – 3	(RH+1) × E + 3	ns
10	t_w(OEL)	OE active time low, when ew = 0. Extended wait mode is disabled.	(RST+1) × E – 3	(RST+1) × E + 3	ns
10	t_w(OEL)	OE active time low, when ew = 1. Extended wait mode is enabled.	(RST+1) × E – 3	(RST+1) × E + 3	ns
11	t_d(WAITH-OEH)	Delay time from WAIT deasserted to OE# high		4E + 3	ns
12	t_{su}(D-OEH)	Input setup time from D valid to OE high	3		ns
13	t_h(OEH-D)	Input hold time from OE high to D invalid	0.5		ns
Write Timing					
15	t_c(CEL)	EMIF write cycle time when ew = 0, meaning not in extended wait mode	(WS+WST+WH+ TA+4)*E-3	(WS+WST+WH+ TA+4)*E+3	ns
15	t_c(CEL)	EMIF write cycle time when ew =1., meaning extended wait mode is enabled	(WS+WST+WH+ TA+4)*E-3	(WS+WST+WH+ TA+4)*E+3	ns
16	t_{osu}CEL-WEL)	Output setup time from CE low to WE low. SS = 0, not in select strobe mode	(WS+1) × E – 3		ns
17	t_{oh}(WEH-CEH)	Output hold time from WE high to CE high. SS = 0, not in select strobe mode	(WH+1) × E – 3		ns
16	t_{osu}CEL-WEL)	Output setup time from CE low to WE low in select strobe mode, SS = 1	(WS+1) × E – 3		ns
17	t_{oh}(WEH-CEH)	Output hold time from WE high to CE high in select strobe mode, SS = 1	(WH+1) × E – 3		ns
18	t_{osu}(RNW-WEL)	Output setup time from RNW valid to WE low	(WS+1) × E – 3		ns
19	t_{oh}(WEH-RNW)	Output hold time from WE high to RNW invalid	(WH+1) × E – 3		ns
20	t_{osu}(BAV-WEL)	Output setup time from BA valid to WE low	(WS+1) × E – 3		ns
21	t_{oh}(WEH-BAIV)	Output hold time from WE high to BA invalid	(WH+1) × E – 3		ns
22	t_{osu}(AV-WEL)	Output setup time from A valid to WE low	(WS+1) × E – 3		ns
23	t_{oh}(WEH-AIV)	Output hold time from WE high to A invalid	(WH+1) × E – 3		ns
24	t_w(WEL)	WE active time low, when ew = 0. Extended wait mode is disabled.	(WST+1) × E – 3		ns
24	t_w(WEL)	WE active time low, when ew = 1. Extended wait mode is enabled.	(WST+1) × E – 3		ns
26	t_{osu}(DV-WEL)	Output setup time from D valid to WE low	(WS+1) × E – 3		ns
27	t_{oh}(WEH-DIV)	Output hold time from WE high to D invalid	(WH+1) × E – 3		ns
25	t_d(WAITH-WEH)	Delay time from WAIT deasserted to WE# high		4E + 3	ns

(1) E = 1/(SYSCLK1/6)

Copyright © 2012–2017, Texas Instruments Incorporated

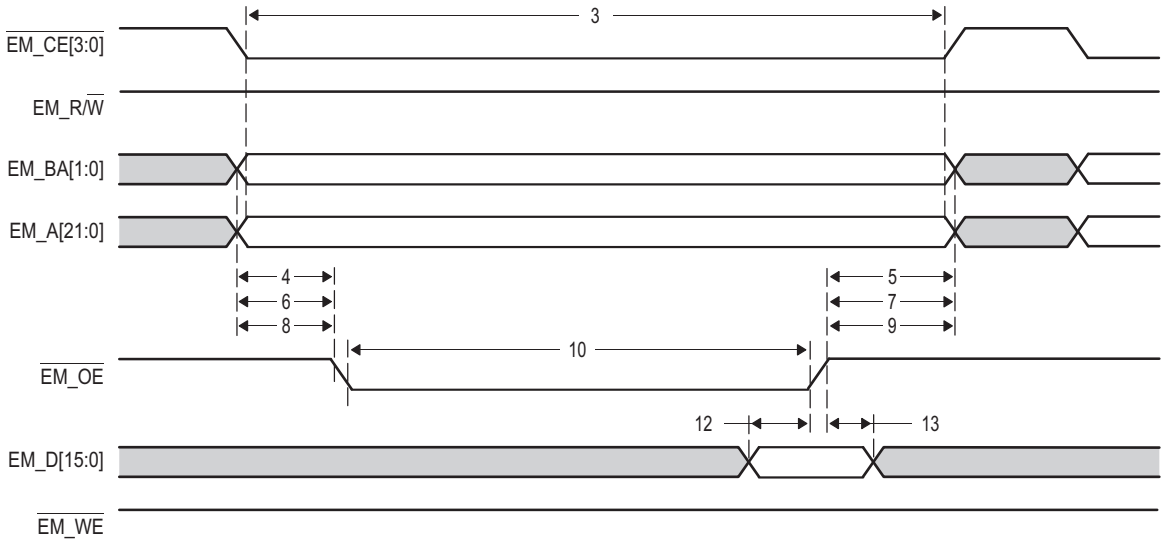

Figure 11-53. EMIF16 Asynchronous Memory Read Timing Diagram

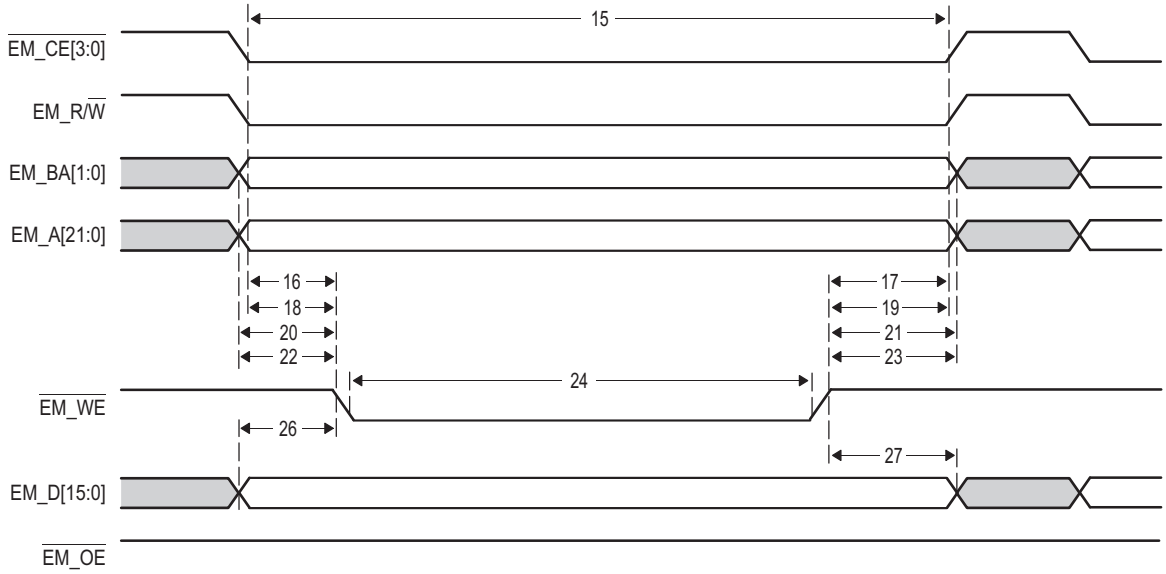

Figure 11-54. EMIF16 Asynchronous Memory Write Timing Diagram

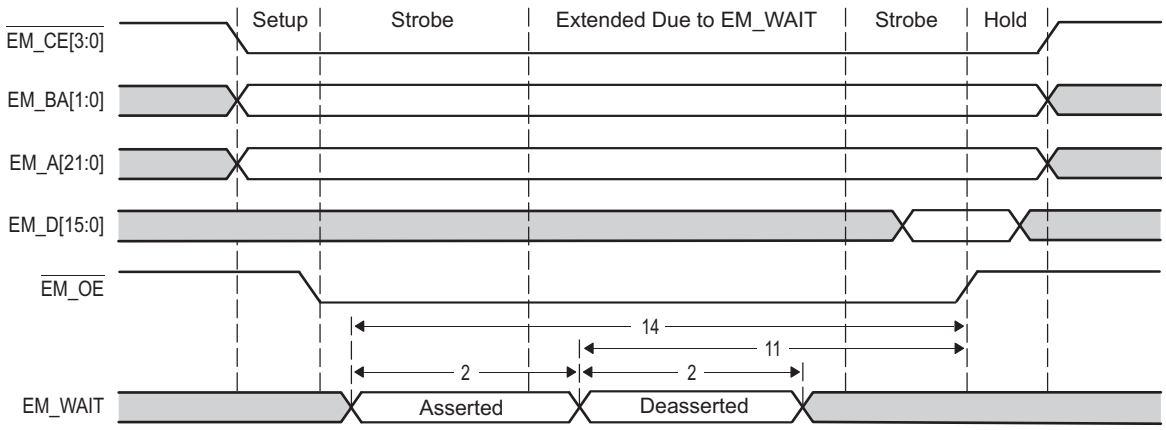

Figure 11-55. EMIF16 EM_WAIT Read Timing Diagram

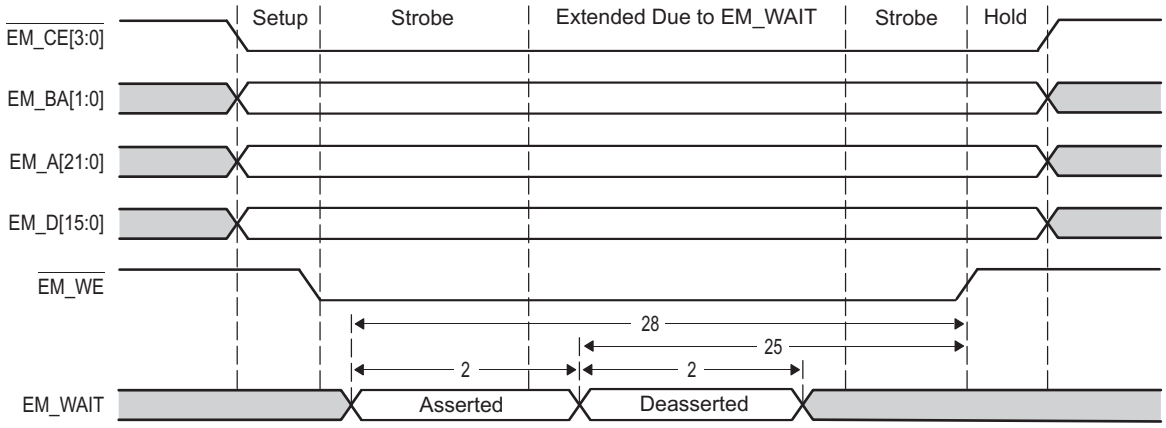

Figure 11-56. EMIF16 EM_WAIT Write Timing Diagram

11.26 Emulation Features and Capability

The debug capabilities of KeyStone II devices include the Debug subsystem module (DEBUGSS). The DEBUGSS module contains the ICEPick module which handles the external JTAG Test Access Port (TAP) and multiple secondary TAPs for the various processing cores of the device. It also provides Debug Access Port (DAP) for system wide memory access from debugger, Cross triggering, System trace, Peripheral suspend generation, Debug port (EMUx) pin management, and so forth. The DEBUGSS module works in conjunction with the debug capability integrated in the processing cores (ARM and DSP subsystems) to provide a comprehensive hardware platform for a rich debug and development experience.

11.26.1 Chip-Level Features

- Support for 1149.1(JTAG and Boundary scan) and 1149.6 (Boundary scan extensions).
- Trace sources to DEBUG SubSystem System Trace Module (DEBUGSS STM)
  - Provides a way for hardware instrumentation and software messaging to supplement the processor core trace mechanisms.
  - Hardware instrumentation support of CPTracers to support logging of bus transactions for critical endpoints
  - Software messaging/instrumentation support for SoC and QMSS PDSP cores through DEBUGSS STM.

Copyright © 2012–2017, Texas Instruments Incorporated

- Trace Sinks
  - Support for trace export (from all processor cores and DEBUGSS STM) through emulation pins. Concurrent trace of DSP and STM traces or ARM and STM traces via EMU pins is possible. Concurrent trace export of DSP and ARM is not possible via EMU pins.
  - Support for 32KB DEBUGSS TBR (Trace Buffer and Router) to hold system trace. The data can be drained using EDMA to on-chip or DDR memory buffers. These intermediate buffers can subsequently be drained through the device high speed interfaces. The DEBUGSS TBR is dedicated to the DEBUGSS STM module. The trace draining interface used in KeyStone II for DEBUGSS and ARMSS are based on the new CT-TBR.
- Cross triggering: Provides a way to propagate debug (trigger) events from one processor/subsystem/module to another
  - Cross triggering between multiple devices via EMU0/EMU1 pins
  - Cross triggering between multiple processing cores within the device like ARM/DSP Cores and nonprocessor entities like ARM STM (input only), CPTracers, CT-TBRs and DEBUGSS STM (input only)
- Synchronized starting and stopping of processing cores
  - Global start of all DSP cores
  - Global stopping of all ARM and DSP cores
- Emulation mode aware peripherals (suspend features and debug access features)
- Support system memory access via the DAP port (natively support 32-bit address, and it can support 36-bit address through configuration of MPAX inside MSMC). Debug access to any invalid memory location (reserved/clock-gated/power-down) does not cause system hang.
- Scan access to secondary TAPs of DEBUGSS is disabled in Secure devices by default. Security override sequence is supported (requires software override sequence) to enable debug in secure devices. In addition, Debug features of the ARM cores are blockable through the ARM debug authentication interface in secure devices.
- Support WIR (wait-in-reset) debug boot mode for nonsecure devices.
- Debug functionality survives all pin resets except power-on resets ($\overline{\text{POR}}$/$\overline{\text{RESETFULL}}$) and test reset ($\overline{\text{TRST}}$).
- PDSP Debug features like access/control through DAP, Halt mode debug and software instrumentation.

11.26.1.1 ARM Subsystem Features

- Support for invasive debug like halt mode debugging (breakpoint, watchpoints) and monitor mode debugging
- Support for noninvasive debugging (program trace, performance monitoring)
- Support for A15 Performance Monitoring Unit (cycle counters)
- Support for per core CoreSight Program Trace Module (CS-PTM) with timing
- Support for an integrated CoreSight System Trace Module (CS-STM) for hardware event and software instrumentation
- A shared timestamp counter for all ARM cores and STM is integrated in ARMSS for trace data correlation
- Support for a 16KB Trace Buffer and Router (TBR) to hold PTM/STM trace. The trace data is copied by EDMA to external memory for draining by device high speed serial interfaces.
- Support for simultaneous draining of trace stream through EMUn pins and TBR (to achieve higher aggregate trace throughput)
- Support for debug authentication interface to disable debug accesses in secure devices
- Support for cross triggering between MPU cores, CS-STM and CT-TBR
- Support for debug through warm reset

Copyright © 2012–2017, Texas Instruments Incorporated

11.26.1.2 DSP Features

- Support for Halt-mode debug
- Support for Real-time debug
- Support for Monitor mode debug
- Advanced Event Triggering (AET) for data/PC watch-points, event monitoring and visibility into external events
- Support for PC/Timing/Data/Event trace.
- TETB (TI Embedded Trace Buffer) of 4KB to store PC/Timing/Data/Event trace. The trace data is copied by EDMA to external memory for draining by device high speed serial interfaces or it can be drained through EMUx pins
- Support for Cross triggering source/sink to other C66x CorePacs and device subsystems.
- Using Advanced Event Triggering to Find and Fix Intermittent Real-Time Bugs application report
- Using Advanced Event Triggering to Debug Real-Time Problems in High Speed Embedded Microprocessor Systems application report

For more information on the AET, see the following documents:

- *Using Advanced Event Triggering to Find and Fix Intermittent Real-Time Bugs*
- *Using Advanced Event Triggering to Debug Real-Time Problems in High Speed Embedded Microprocessor Systems*

11.26.2 ICEPick Module

The debugger is connected to the device through its external JTAG interface. The first level of debug interface seen by the debugger is connected to the ICEPick module embedded in the DEBUGSS. ICEPick is the chip-level TAP, responsible for providing access to the IEEE 1149.1 and IEEE 1149.6 boundary scan capabilities of the device.

The device has multiple processors, some with secondary JTAG TAPs (C66x CorePacs) and others with an APB memory mapped interface (ARM CorePac and Coresight components). ICEPick manages the TAPs as well as the power/reset/clock controls for the logic associated with the TAPs as well as the logic associated with the APB ports.

ICEPick provides the following debug capabilities:

- Debug connect logic for enabling or disabling most ICEPick instructions
- Dynamic TAP insertion
  - Serially linking up to 32 TAP controllers
  - Individually selecting one or more of the TAPS for scan without disrupting the instruction register (IR) state of other TAPs
- Power, reset and clock management
  - Provides the power and clock status of the domain to the debugger
  - Provides debugger control of the power domain of a processor.
    - Force the domain power and clocks on
    - Prohibit the domain from being clock-gated or powered down
  - Applies system reset
  - Provides wait-in-reset (WIR) boot mode
  - Provides global and local WIR release
  - Provides global and local reset block

The ICEPick module implements a connect register, which must be configured with a predefined key to enable the full set of JTAG instructions. Once the debug connect key has been properly programmed, ICEPick signals and subsystems emulation logic should be turned on.

Copyright © 2012–2017, Texas Instruments Incorporated

11.26.2.1 ICEPick Dynamic Tap Insertion

To include more or fewer secondary TAPS in the scan chain, the debugger must use the ICEPick TAP router to program the TAPs. At its root, ICEPick is a scan-path linker that lets the debugger selectively choose which subsystem TAPs are accessible through the device-level debug interface. Each secondary TAP can be dynamically included in or excluded from the scan path. From external JTAG interface point of view, secondary TAPS that are not selected appear not to exist.

There are two types of components connected through ICEPick to the external debug interface:

- Legacy JTAG Components — C66x implements a JTAG-compatible port and are directly interfaced with ICEPick and individually attached to an ICEPick secondary TAP.
- CoreSight Components — The CoreSight components are interfaced with ICEPick through the CS_DAP module. The CS_DAP is attached to the ICEPick secondary TAP and translates JTAG transactions into APBv3 transactions.

Table 11-57 shows the ICEPick secondary taps in the system. For more details on the test related P1500 TAPs, see the DFTSS specification.

Table 11-57. ICEPick Debug Secondary TAPs

TAP #	TYPE	NAME	IR SCAN LENGTH	ACCESS IN SECURE DEVICE	DESCRIPTION
0	n/a	n/a	n/a	No	Reserved (This is an internal TAP and not exposed at the DEBUGSS boundary)
1	JTAG	C66x CorePac0	38	No	C66x CorePac0
2	JTAG	C66x CorePac1	38	No	C66x CorePac1
3	JTAG	C66x CorePac2	38	No	C66x CorePac2
4	JTAG	C66x CorePac3	38	No	C66x CorePac3
5	JTAG	C66x CorePac4	38	No	C66x CorePac4 (66AK2H12/14 only)
6	JTAG	C66x CorePac5	38	No	C66x CorePac5 (66AK2H12/14 only)
7	JTAG	C66x CorePac6	38	No	C66x CorePac6 (66AK2H12/14 only)
8	JTAG	C66x CorePac7	38	No	C66x CorePac7 (66AK2H12/14 only)
9..13	JTAG	Reserved	NA	No	Spare ports for future expansion
14	CS	CS_DAP (APB-AP)	4	No	ARM A15 Cores (This is an internal TAP and not exposed at the DEBUGSS boundary)
		CS_DAP (AHB-AP)			PDSP Cores (This is an internal TAP and not exposed at the DEBUGSS boundary)

For more information on ICEPick, see the *KeyStone II Architecture Debug and Trace User's Guide*.

11.27 Debug Port (EMUx)

The device also supports 34 emulation pins — EMU[33:0], which includes 19 dedicated EMU pins and 15 pins multiplexed with GPIO. These pins are shared by A15/DSP/STM trace, cross triggering, and debug boot modes as shown in Table 11-61. The 34-pin dedicated emulation interface is also defined in the following table.

NOTE

If EMU[1:0] signals are shared for cross-triggering purposes in the board level, they should not be used for trace purposes.

Copyright © 2012–2017, Texas Instruments Incorporated

Table 11-58. Emulation Interface with Different Debug Port Configurations

EMU PINS	CROSS TRIGGERING	ARM TRACE		DSP TRACE		STM	DEBUG BOOT MODE
EMU33		TRCDTa[29]	TRCDTb[31]			TRCDT3, or TRCDT2, or TRCDT1, or TRCDT0, or Hi-ZTRCCLK, or Hi-Z	
EMU32		TRCDTa[28]	TRCDTb[30]			TRCDT3, or TRCDT2, or TRCDT1, or TRCDT0, or TRCCLK, or Hi-Z	
EMU31		TRCDTa[27]	TRCDTb[29]			TRCDT3, or TRCDT2, or TRCDT1, or TRCDT0, or TRCCLK, or Hi-Z	
EMU30		TRCDTa[26]	TRCDTb[28]			TRCDT3, or TRCDT2, or TRCDT1, or TRCDT0, or TRCCLK, or Hi-Z	
EMU29		TRCDTa[25]	TRCDTb[27]			TRCDT3, or TRCDT2, or TRCDT1, or TRCDT0, or TRCCLK, or Hi-Z	
EMU28		TRCDTa[24]	TRCDTb[26]			TRCDT3, or TRCDT2, or TRCDT1, or TRCDT0, or TRCCLK, or Hi-Z	
EMU27		TRCDTa[23]	TRCDTb[25]			TRCDT3, or TRCDT2, or TRCDT1, or TRCDT0, or TRCCLK, or Hi-Z	
EMU26		TRCDTa[22]	TRCDTb[24]			TRCDT3, or TRCDT2, or TRCDT1, or TRCDT0, or TRCCLK, or Hi-Z	
EMU25		TRCDTa[21]	TRCDTb[23]			TRCDT3, or TRCDT2, or TRCDT1, or TRCDT0, or TRCCLK, or Hi-Z	
EMU24		TRCDTa[20]	TRCDTb[22]			TRCDT3, or TRCDT2, or TRCDT1, or TRCDT0, or TRCCLK, or Hi-Z	
EMU23		TRCDTa[19]	TRCDTb[21]	TRCDTa[19]		TRCDT3, or TRCDT2, or TRCDT1, or TRCDT0, or TRCCLK, or Hi-Z	
EMU22		TRCDTa[18]	TRCDTb[20]	TRCDTa[18]		TRCDT3, or TRCDT2, or TRCDT1, or TRCDT0, or TRCCLK, or Hi-Z	
EMU21		TRCDTa[17]	TRCDTb[19]	TRCDTa[17]	TRCDTb[19]	TRCDT3, or TRCDT2, or TRCDT1, or TRCDT0, or TRCCLK, or Hi-Z	
EMU20		TRCDTa[16]	TRCDTb[18]	TRCDTa[16]	TRCDTb[18]	TRCDT3, or TRCDT2, or TRCDT1, or TRCDT0, or TRCCLK, or Hi-Z	
EMU19		TRCDTa[15]	TRCDTb[17]	TRCDTa[15]	TRCDTb[17]	TRCDT3, or TRCDT2, or TRCDT1, or TRCDT0, or TRCCLK, or Hi-Z	
EMU18		TRCDTa[14]	TRCDTb[16]	TRCDTa[14]	TRCDTb[16]	TRCDT3, or TRCDT2, or TRCDT1, or TRCDT0, or TRCCLK, or Hi-Z	
EMU17		TRCDTa[13]	TRCDTb[15]	TRCDTa[13]	TRCDTb[15]	TRCDT3, or TRCDT2, or TRCDT1, or TRCDT0, or TRCCLK, or Hi-Z	
EMU16		TRCDTa[12]	TRCDTb[14]	TRCDTa[12]	TRCDTb[14]	TRCDT3, or TRCDT2, or TRCDT1, or TRCDT0, or TRCCLK, or Hi-Z	
EMU15		TRCDTa[11]	TRCDTb[13]	TRCDTa[11]	TRCDTb[13]	TRCDT3, or TRCDT2, or TRCDT1, or TRCDT0, or TRCCLK, or Hi-Z	
EMU14		TRCDTa[10]	TRCDTb[12]	TRCDTa[10]	TRCDTb[12]	TRCDT3, or TRCDT2, or TRCDT1, or TRCDT0, or TRCCLK, or Hi-Z	
EMU13		TRCDTa[9]	TRCDTb[11]	TRCDTa[9]	TRCDTb[11]	TRCDT3, or TRCDT2, or TRCDT1, or TRCDT0, or TRCCLK, or Hi-Z	
EMU12		TRCDTa[8]	TRCDTb[10]	TRCDTa[8]	TRCDTb[10]	TRCDT3, or TRCDT2, or TRCDT1, or TRCDT0, or TRCCLK, or Hi-Z	
EMU11		TRCDTa[7]	TRCDTb[9]	TRCDTa[7]	TRCDTb[9]	TRCDT3, or TRCDT2, or TRCDT1, or TRCDT0, or TRCCLK, or Hi-Z	
EMU10		TRCDTa[6]	TRCDTb[8]	TRCDTa[6]	TRCDTb[8]	TRCDT3, or TRCDT2, or TRCDT1, or TRCDT0, or TRCCLK, or Hi-Z	
EMU9		TRCDTa[5]	TRCDTb[7]	TRCDTa[5]	TRCDTb[7]	TRCDT3, or TRCDT2, or TRCDT1, or TRCDT0, or TRCCLK, or Hi-Z	
EMU8		TRCDTa[4]	TRCDTb[6]	TRCDTa[4]	TRCDTb[6]	TRCDT3, or TRCDT2, or TRCDT1, or TRCDT0, or TRCCLK, or Hi-Z	
EMU7		TRCDTa[3]	TRCDTb[5]	TRCDTa[3]	TRCDTb[5]	TRCDT3, or TRCDT2, or TRCDT1, or TRCDT0, or TRCCLK, or Hi-Z	
EMU6		TRCDTa[2]	TRCDTb[4]	TRCDTa[2]	TRCDTb[4]	TRCDT3, or TRCDT2, or TRCDT1, or TRCDT0, or TRCCLK, or Hi-Z	
EMU5		TRCDTa[1]	TRCDTb[3]	TRCDTa[1]	TRCDTb[3]	TRCDT3, or TRCDT2, or TRCDT1, or TRCDT0, or TRCCLK, or Hi-Z	
EMU4		TRCDTa[0]	TRCDTb[2]	TRCDTa[0]	TRCDTb[2]	TRCDT3, or TRCDT2, or TRCDT1, or TRCDT0, or TRCCLK, or Hi-Z	

Copyright © 2012–2017, Texas Instruments Incorporated

Table 11-58. Emulation Interface with Different Debug Port Configurations (continued)

EMU PINS	CROSS TRIGGERING	ARM TRACE		DSP TRACE		STM	DEBUG BOOT MODE
EMU3		TRCCTRL	TRCCTRL	TRCCLKB	TRCCLKB	TRCDT3, or TRCDT2, or TRCDT1, or TRCDT0, or TRCCLK, or Hi-Z	
EMU2		TRCCLK	TRCCLK	TRCCLKA	TRCCLKA	TRCDT3, or TRCDT2, or TRCDT1, or TRCDT0, or TRCCLK, or Hi-Z	
EMU1	Trigger1		TRCDTb[1]		TRCDTb[1]	TRCDT3, or TRCDT2, or TRCDT1, or TRCDT0, or TRCCLK, or Hi-Z	dbgbootmode[1]
EMU0	Trigger0		TRCDTb[0]		TRCDTb[0]	TRCDT3, or TRCDT2, or TRCDT1, or TRCDT0, or TRCCLK, or Hi-Z	dbgbootmode[0]

Copyright © 2012–2017, Texas Instruments Incorporated

11.27.1 Concurrent Use of Debug Port

The following combinations are possible concurrently:

- Trigger 0/1
- Trigger 0/1 and STM Trace (up to 4 data pins)
- Trigger 0/1 and STM Trace (up to 4 data pins) and C66x Trace (up to 20 data pins)
- Trigger 0/1 and STM Trace (1-4 data pins) and ARM Trace (27-24 data pins)
- STM Trace (1-4 data pins) and ARM Trace (29-26 data pins)
- Trigger 0/1 and ARM Trace (up to 29 data pins)
- ARM Trace (up to 32 data pins)

ARM and DSP simultaneous trace is not supported.

11.27.2 Master ID for Hardware and Software Messages

Table 11-59 and Table 11-60 describe the master ID for the various hardware and software masters of the STM.

Table 11-59. MSTID Mapping for Hardware Instrumentation (CPTRACERS)

CPTRACER NAME	MSTID [7:0]	CLOCK DOMAIN	SID[4:0]	DESCRIPTION
CPT_MSMCx_MST, where x = 0..3	0x94-0x97	SYSCLK1/1	0x0..3	MSMC SRAM Bank 0 to MSMC SRAM Bank 3 monitors
CPT_MSMC4_MST	0xB1	SYSCLK1/1	0x4	MSMC SRAM Bank 4
CPT_MSMCx_MST, where x = 5..7	0xAE – 0xB0	SYSCLK1/1	0x5..7	MSMC SRAM Bank 5to MSMC SRAM Bank 7 monitors
CPT_DDR3A_MST	0x98	SYSCLK1/1	0x8	MSMC DDR3A port monitor
CPT_L2_x_MST, where x = 0..7	0x8C – 0x93	SYSCLK1/3	0x9..0x10	DSP 0 to 7 SDMA port monitors
CPT_TPCC0_4_MST	0xA4	SYSCLK1/3	0x11	EDMA 0 and EDMA 4 CFG port monitor
CPT_TPCC1_2_3_MST	0xA5	SYSCLK1/3	0x12	EDMA 1, EDMA2 and EDMA3 CFG port monitor
CPT_INTC_MST	0xA6	SYSCLK1/3	0x13	INTC port monitor (for INTC 0/1/2 and GIC400)
CPT_SM_MST	0x99	SYSCLK1/3	0x14	Semaphore CFG port monitors
CPT_QM_CFG1_MST	0x9A	SYSCLK1/3	0x15	QMSS CFG1 port monitor
CPT_QM_CFG2_MST	0xA0	SYSCLK1/3	0x16	QMSS CFG2 port monitor
CPT_QM_M_MST	0x9B	SYSCLK1/3	0x17	QM_M CFG/DMA port monitor
CPT_SPI_ROM_EMIF16_MST	0xA7	SYSCLK1/3	0x18	SPI ROM EMIF16 CFG port monitor
CPT_CFG_MST	0x9C	SYSCLK1/3	0x19	SCR_3P_B and SCR_6P_B CFG peripheral port monitors
Reserved			0x1A	Reserved
Reserved			0x1B	Reserved
Reserved			0x1C	Reserved
Reserved			0x1D	Reserved
Reserved			0x1E	Reserved
CPT_DDR3B_MST	0xA1	SYSCLK1/3	0x1F	DDR 3B port monitor (on SCR 3C)

Table 11-60. MSTID Mapping for Software Messages

CORE NAME	MSTID [7:0]	DESCRIPTION
C66x CorePac0	0x0	C66x CorePac MDMA Master ID
C66x CorePac1	0x1	C66x CorePac MDMA Master ID
C66x CorePac2	0x2	C66x CorePac MDMA Master ID
C66x CorePac3	0x3	C66x CorePac MDMA Master ID
C66x CorePac4	0x4	(66AK2H14/12 only)

Copyright © 2012–2017, Texas Instruments Incorporated

Table 11-60. MSTID Mapping for Software Messages (continued)

CORE NAME	MSTID [7:0]	DESCRIPTION
C66x CorePac5	0x5	(66AK2H14/12 only)
C66x CorePac6	0x6	(66AK2H14/12 only)
C66x CorePac7	0x7	(66AK2H14/12 only)
A15 Core0	0x8	ARM Master IDs
A15 Core1	0x9	ARM Master ID
A15 Core2	0xA	ARM Master ID
A15 Core3	0xB	ARM Master ID
QMSS PDSPs	0x46	All QMSS PDSPs share the same master ID. Differentiating between the 8 PDSPs is done through the channel number used

11.27.3 SoC Cross-Triggering Connection

The cross-trigger lines are shared by all the subsystems implementing cross-triggering. An MPU subsystem trigger event can therefore be propagated to any application subsystem or system trace component. The remote subsystem or system trace component can be programmed to be sensitive to the global SOC trigger lines to either:

- Generate a processor debug request
- Generate an interrupt request
- Start/Stop processor trace
- Start/Stop CBA transaction tracing through CPTracers
- Start external logic analyzer trace
- Stop external logic analyzer trace

Table 11-61 describes the cross-triggering connection.

Table 11-61. Cross-Triggering Connection

NAME	SOURCE TRIGGERS	SINK TRIGGERS	COMMENTS
Inside DEBUGSS			
Device-to-device trigger via EMU0/1 pins	YES	YES	This is fixed (not affected by configuration)
MIPI-STM	NO	YES	Trigger input only for MIPI-STM in DebugSS
CT-TBR	YES	YES	DEBUGSS CT-TBR
CS-TPIU	NO	YES	DEBUGSS CS-TPIU
Outside DEBUGSS			
DSPSS	YES	YES	
CP_Tracers	YES	YES	
ARM	YES	YES	ARM Cores, ARM CS-STM and ARM CT-TBR

Table 11-62 describes the crosstrigger connection between various cross trigger sources and TI XTRIG module.

Table 11-62. TI XTRIG Assignment

NAME	ASSIGNED XTRIG CHANNEL NUMBER
C66x CorePac0-3 (66AK2H06 only)	XTRIG 0-3 (66AK2H06 only)
C66x CorePac0-7 (66AK2H12/14 only)	XTRIG 0-7 (66AK2H12/14 only)
CPTracer 0..31 (The CPTracer number refers to the SID[4:0] as shown in Table 11-59	XTRIG 8 .. 39

Copyright © 2012–2017, Texas Instruments Incorporated

11.27.4 Peripherals-Related Debug Requirement

Table 11-63 lists all the peripherals on this device, and the status of whether or not it supports emulation suspend or emulation request events.

The DEBUGSS supports up to 32 debug suspend sources (processor cores) and 64 debug suspend sinks (peripherals). The assignment of peripherals is shown in Table 11-64 and the assignment of processor cores is shown in Table 11-65. By default the logical AND of all the processor cores is routed to the peripherals. It is possible to select an individual core to be routed to the peripheral (For example: used in tightly coupled peripherals like timers), a logical AND of all cores (Global peripherals) or a logical OR of all cores by programming the DEBUGSS.DRM module.

The SOFT bit should be programmed based on whether or not an immediate pause of the peripheral function is required or if the peripheral suspend should occur only after a particular completion point is reached in the normal peripheral operation. The FREE bit should be programmed to enable or disable the emulation suspend functionality.

Table 11-63. Peripherals Emulation Support

PERIPHERAL	EMULATION SUSPEND SUPPORT				EMULATION REQUEST SUPPORT (cemudbg/emudbg)	DEBUG PERIPHERAL ASSIGNMENT
	STOP-MODE	REAL-TIME MODE	FREE BIT	STOP BIT		
Infrastructure Peripherals						
EDMA_x, where X=0/1/2/3/4	N	N	N	N	Y	NA
QM_SS	Y (CPDMA only)	Y (CPDMA only)	Y (CPDMA only)	Y (CPDMA only)	Y	20
CP_Tracers_X, where X = 0..32	N	N	N	N	N	NA
MPU_X, where X = 0..11	N	N	N	N	Y	NA
CP_INTC	N	N	N	N	Y	NA
BOOT_CFG	N	N	N	N	Y	NA
SEC_MGR	N	N	N	N	Y	NA
PSC	N	N	N	N	N	NA
PLL	N	N	N	N	N	NA
TIMERx, x=0, 1..7, 8..19	Y	N	Y	Y	N	0, 1..7, 8..19
Semaphore	N	N	N	N	Y	NA
GPIO	N	N	N	N	N	NA
Memory Controller Peripherals						
DDR3A/B	N	N	N	N	Y	NA
MSMC	N	N	N	N	Y	NA
EMIF16	N	N	N	N	Y	NA
Serial Interfaces						
I^2C_X, where X = 0/1/2	Y	N	Y	Y	Y	21/22/23
SPI_X, where X = 0/1/2	N	N	N	N	Y	NA
UART_X, where X = 0/1	Y	N	Y	Y	Y	24/25
High Speed Serial Interfaces						
Hyperlink_0/1	N	N	N	N	Y	
PCIeSS 0	N	N	N	N	N	
SRIO / NetCP_1	Y	Y	Y	Y (Soft Only)	Y	26
NetCP (ethernet switch)	Y	Y	Y	Y	N	27
10GbE (ethernet switch)(1)	Y	N	Y	Y	N	29

(1) 66AK2H14 only

Copyright © 2012–2017, Texas Instruments Incorporated

Table 11-63. Peripherals Emulation Support (continued)

PERIPHERAL	EMULATION SUSPEND SUPPORT				EMULATION REQUEST SUPPORT (cemudbg/emudbg)	DEBUG PERIPHERAL ASSIGNMENT
	STOP-MODE	REAL-TIME MODE	FREE BIT	STOP BIT		
USBSS	N	N	N	N	N	NA

Based on Table 11-63, the number of suspend interfaces in Keystone II devices is listed in Table 11-64.

Table 11-64. EMUSUSP Peripheral Summary (for EMUSUSP handshake from DEBUGSS)

INTERFACES	NUM_SUSPEND_PERIPHERALS
EMUSUSP Interfaces	54
EMUSUSP Realtime Interfaces	15

Table 11-65 summarizes the DEBUG core assignment. Emulation suspend output of all the cores are synchronized to SYSCLK1/6 which is frequency of the slowest peripheral that uses these signals.

Table 11-65. EMUSUSP Core Summary (for EMUSUSP handshake to DEBUGSS)

CORE #	ASSIGNMENT
0..7	C66x CorePac0..7
8..11	ARM CorePac 8..11
0..7	C66x CorePac0..3 C66x CorePac4.,7 (66AK2H12/14 only)
12..29	Reserved
30	Logical OR of Core# 0..11
31	Logical AND of Core #0..11

11.27.5 Advanced Event Triggering (AET)

The device supports advanced event triggering (AET). This capability can be used to debug complex problems as well as understand performance characteristics of user applications. AET provides the following capabilities:

- **Hardware program breakpoints**: specify addresses or address ranges that can generate events such as halting the processor or triggering the trace capture.
- **Data watchpoints**: specify data variable addresses, address ranges, or data values that can generate events such as halting the processor or triggering the trace capture.
- **Counters**: count the occurrence of an event or cycles for performance monitoring.
- **State sequencing**: allows combinations of hardware program breakpoints and data watchpoints to precisely generate events for complex sequences.

For more information on the AET, see the following documents:

- *Using Advanced Event Triggering to Find and Fix Intermittent Real-Time Bugs*
- *Using Advanced Event Triggering to Debug Real-Time Problems in High Speed Embedded Microprocessor Systems*

11.27.6 Trace

The device supports trace. Trace is a debug technology that provides a detailed, historical account of application code execution, timing, and data accesses. Trace collects, compresses, and exports debug information for analysis. Trace works in real-time and does not impact the execution of the system.

For more information on board design guidelines for trace advanced emulation, see the *Emulation and Trace Headers Technical Reference Manual*.

Copyright © 2012–2017, Texas Instruments Incorporated

11.27.6.1 Trace Electrical Data and Timing

The Trace switching characteristics are shown in Table 11-66.

Table 11-66. Trace Switching Characteristics

(see Figure 11-57)

NO.	PARAMETER		MIN	MAX	UNIT
1	t_w(DPnH)	Pulse duration, DPn/EMUn high	2.4		ns
1	t_w(DPnH)90%	Pulse duration, DPn/EMUn high detected at 90% Voh	1.5		ns
2	t_w(DPnL)	Pulse duration, DPn/EMUn low	2.4		ns
2	t_w(DPnL)10%	Pulse duration, DPn/EMUn low detected at 10% Voh	1.5		ns
3	t_{sko}(DPn)	Output skew time, time delay difference between DPn/EMUn pins configured as trace	-1	1	ns
	t_{skp}(DPn)	Pulse skew, magnitude of difference between high-to-low (tphl) and low-to-high (tplh) propagation delays.		600	ps
	t_{sldp_o}(DPn)	Output slew rate DPn/EMUn	3.3		V/ns

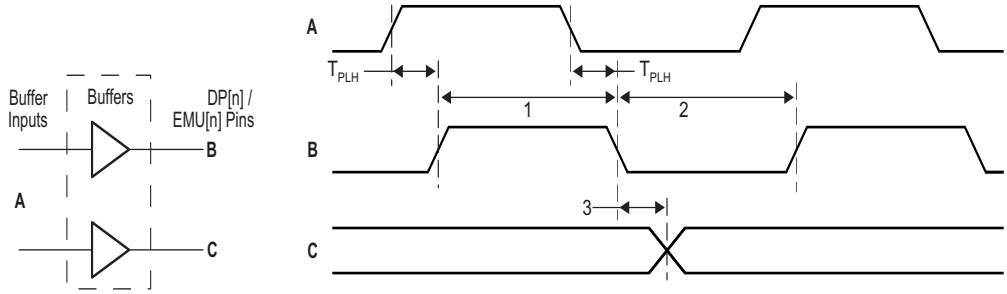

Figure 11-57. Trace Timing

11.27.7 IEEE 1149.1 JTAG

The Joint Test Action Group (JTAG) interface is used to support boundary scan and emulation of the device. The boundary scan supported allows for an asynchronous test reset ($\overline{\text{TRST}}$) and only the five baseline JTAG signals (for example, no EMU[1:0]) required for boundary scan. Most interfaces on the device follow the Boundary Scan Test Specification (IEEE 1149.1), while all of the SerDes (SGMII) support the AC-coupled net test defined in AC-Coupled Net Test Specification (IEEE 1149.6).

It is expected that all compliant devices are connected through the same JTAG interface, in daisy-chain fashion, in accordance with the specification. The JTAG interface uses 1.8-V LVCMOS buffers, compliant with the *Power Supply Voltage and Interface Standard for Nonterminated Digital Integrated Circuit Specification* (EAI/JESD8-5).

11.27.7.1 IEEE 1149.1 JTAG Compatibility Statement

For maximum reliability, the 66AK2Hxx device includes an internal pulldown (IPD) on the $\overline{\text{TRST}}$ pin to ensure that $\overline{\text{TRST}}$ will always be asserted upon power up and the device's internal emulation logic will always be properly initialized when this pin is not routed out. JTAG controllers from Texas Instruments actively drive $\overline{\text{TRST}}$ high. However, some third-party JTAG controllers may not drive $\overline{\text{TRST}}$ high, but expect the use of an external pullup resistor on $\overline{\text{TRST}}$. When using this type of JTAG controller, assert $\overline{\text{TRST}}$ to initialize the device after powerup and externally drive $\overline{\text{TRST}}$ high before attempting any emulation or boundary scan operations.

Copyright © 2012–2017, Texas Instruments Incorporated

11.27.7.2 JTAG Electrical Data and Timing

JTAG test port timing requirements are shown in Table 11-67 and JTAG test port switching characteristics are shown in Table 11-68.

Table 11-67. JTAG Test Port Timing Requirements

(see Figure 11-58)

NO.			MIN	MAX	UNIT
1	tc(TCK)	Cycle time, TCK	23		ns
1a	tw(TCKH)	Pulse duration, TCK high (40% of tc)	9.2		ns
1b	tw(TCKL)	Pulse duration, TCK low (40% of tc)	9.2		ns
3	tsu(TDI-TCK)	Input setup time, TDI valid to TCK high	2		ns
3	tsu(TMS-TCK)	Input setup time, TMS valid to TCK high	2		ns
4	th(TCK-TDI)	Input hold time, TDI valid from TCK high	10		ns
4	th(TCK-TMS)	Input hold time, TMS valid from TCK high	10		ns

Table 11-68. JTAG Test Port Switching Characteristics

(see Figure 11-58)

NO.	PARAMETER		MIN	MAX	UNIT
2	$t_{d(TCKL-TDOV)}$	Delay time, TCK low to TDO valid		8.24	ns

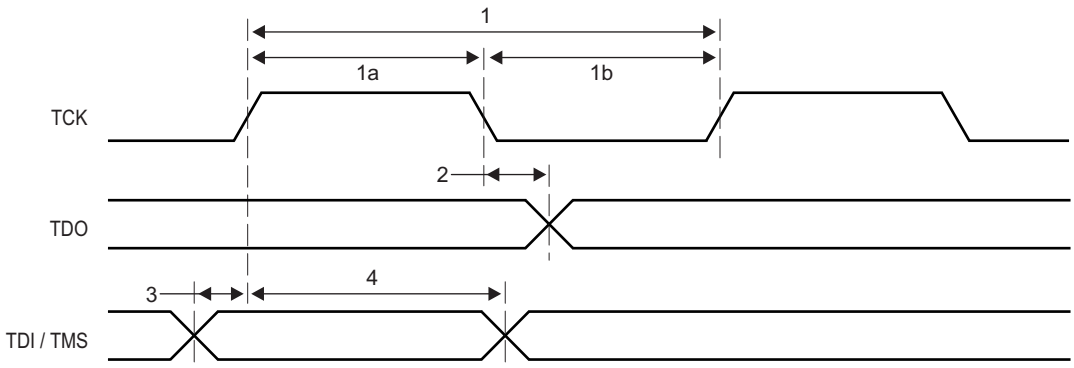

Figure 11-58. JTAG Test-Port Timing

12 Device and Documentation Support

12.1 Device Nomenclature

To designate the stages in the product development cycle, TI assigns prefixes to the part numbers of all devices and support tools. Each family member has one of two prefixes: X or [blank]. These prefixes represent evolutionary stages of product development from engineering prototypes through fully qualified production devices/tools.

Device development evolutionary flow:

- **X:** Experimental device that is not necessarily representative of the final device's electrical specifications
- **[Blank]:** Fully qualified production device

Support tool development evolutionary flow:

- **X:** Development-support product that has not yet completed Texas Instruments internal qualification testing.
- **[Blank]:** Fully qualified development-support product

Experimental (X) and fully qualified [Blank] devices and development-support tools are shipped with the following disclaimer:

Developmental product is intended for internal evaluation purposes.

Fully qualified and production devices and development-support tools have been characterized fully, and the quality and reliability of the device have been demonstrated fully. TI's standard warranty applies.

Predictions show that experimental devices (X) have a greater failure rate than the standard production devices. Texas Instruments recommends that these devices not be used in any production system because their expected end-use failure rate still is undefined. Only qualified production devices are to be used.

TI device nomenclature also includes a suffix with the device family name. This suffix indicates the package type (for example, AAW), the temperature range (for example, blank is the default case temperature range), and the device speed range, in Megahertz (for example, blank is 1000 MHz [1 GHz]).

For device part numbers and further ordering information for 66AK2Hxx in the AAW package type, see ti.com or contact your TI sales representative.

Figure 12-1 provides a legend for reading the complete device name for any C66x+ DSP generation member.

Copyright © 2012–2017, Texas Instruments Incorporated

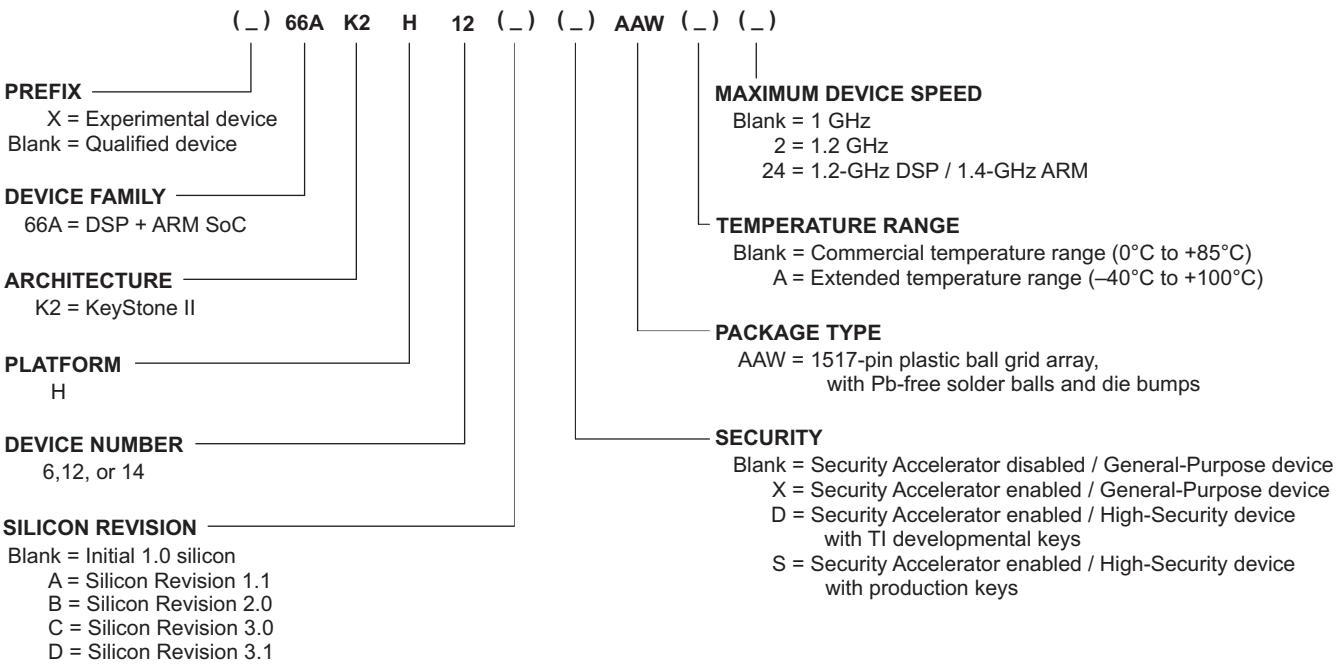

Figure 12-1. C66x DSP Device Nomenclature (Including the 66AK2Hxx Device)

12.2 Tools and Software

TI offers and extensive line of development tools. Tools and software to evaluate the performance of the device, generate code, and develop solutions are listed below.

Models

66AK2H14 AAW BSDL Model BSDL model for the 66AK2H14 DSP.

66AK2H14 AAW IBIS Model IBIS model for the 66AK2H14 DSP.

66AK2H14 Power Consumption Model Power consumption summary spreadsheet for the 66AK2H14 DSP.

66AK2H12 66AK2H06 AAW BSDL Model BSDL model for the 66AK2H12 and 66AK2H06 DSPs.

66AK2H12 66AK2H06 AAW IBIS Model IBIS model for the 66AK2H12 and 66AK2H06 DSPs.

66AK2H12 Power Consumption Model Power consumption summary spreadsheet for the 66AK2H12 DSP.

66AK2H06 Power Consumption Model Power consumption summary spreadsheet for the 66AK2H06 DSP.

66AK2Hx FloTherm Model FloTherm model for the 66AK2Hx DSPs.

Design Kits and Evaluation Modules

TCI6636K2H Evaluation Module Enables developers to immediately start evaluating TCI6636K2H processor and begin building application around it especially those demanding high-performance computation like telecom infrastructures, wireless standards including WCDMA/HSPA/HSPA+, TD-SCDMA, GSM, TDD-LTE,FDD-LTE, and WiMAX.

Software

Medical Imaging Software Tool Kits (STK) Provides a collection of several standard ultrasound and optical coherence tomography (OCT) algorithms for TI's C66x and C64x+ architecture.

Multicore Video Infrastructure Demo for Multicore Software Development Kit (MCSDK) Provides highly-optimized platform and video software components and enables development of real-time video applications on C66x multicore devices.

CODECS- Video, Speech - for C66x-based Devices Describes the free TI codecs that come with production licensing and are available for download now. All are production-tested for easy integration into video, and voice applications.

Processor SDK for 66AK2HX Processors - Linux and TI-RTOS Support Describes the unified software platform for TI embedded processors providing easy setup and fast out-of-the-box access to benchmarks and demos.

SYS/BIOS and Linux Multicore Software Development Kits (MCSDK) for C66x, C647x, C645x Processors
Provides highly-optimized bundles of foundational, platform-specific drivers to enable development on selected TI ARM and DSP devices. The MCSDK gives developers the ability to evaluate hardware and software capabilities of the evaluation platform and to rapidly develop applications.

DSP Math Library for Floating-Point Devices Describes the optimized floating-point math function library for C programmers using TI floating point devices.

TMS320C6000 DSP Library (DSPLIB) Describes the platform optimized DSP function library for C programmers. It includes C-callable, general-purpose signal-processing routines that are typically used in computationally intensive real-time applications.

TMS320C6000 Image Library (IMGLIB) Provides an optimized image/video processing function library for C programmers. It includes C-callable general-purpose image/video processing routines that are typically used in computationally intensive real-time applications.

Development Tools

Code Composer Studio (CCS) Integrated Development Environment (IDE) for Multicore Processors
Integrated development environment (IDE) that supports TI's Microcontroller and Embedded Processors portfolio. Code Composer Studio comprises a suite of tools used to develop and

Copyright © 2012–2017, Texas Instruments Incorporated

debug embedded applications. It includes an optimizing C/C++ compiler, source code editor, project build environment, debugger, profiler, and many other features. The intuitive IDE provides a single user interface taking you through each step of the application development flow. Familiar tools and interfaces allow users to get started faster than ever before. Code Composer Studio combines the advantages of the Eclipse software framework with advanced embedded debug capabilities from TI resulting in a compelling feature-rich development environment for embedded developers.

XDS200 USB Debug Probe Features a balance of low cost with good performance between the super low cost XDS100 and the high performance XDS560v2. Also, all XDS debug probes support Core and System Trace in all ARM and DSP processors that feature an Embedded Trace Buffer (ETB).

XDS560v2 System Trace USB & Ethernet Debug Probe Adds system pin trace in its large external memory buffer. Available for selected TI devices, this external memory buffer captures device-level information that allows obtaining accurate bus performance activity and throughput, as well as power management of core and peripherals. Also, all XDS debug probes support Core and System Trace in all ARM and DSP processors that feature an Embedded Trace Buffer (ETB).

XDS560v2 System Trace USB Debug Probe Connects to the target board via a MIPI HSPT 60-pin connector (with multiple adapters for TI 14-pin, TI 20-pin and ARM 20 pin) and to the host PC via USB2.0 High speed (480Mbps). It also requires a license of Code Composer Studio IDE running on the host PC.

TI Design Network

Keystone II SoC Solution Provides a complete stack of operating system and communications software for the TI Keystone II architecture. It includes a Yocto based commercial Linux distribution, DSP operating system (OSEck®) and an optimized communication service between ARM cores, DSP cores, and external CPUs in the system (LINX).

OSEck Provides a full-featured, compact, real-time kernel for DSPs that is optimized to suit the specific requirements of high performance, memory constrained applications. OSEck is a compact kernel and has an extremely small memory footprint, but still combines rich functionality with high performance and true real-time behavior.

Wind River Linux Delivers a commercial-grade Linux platform, advanced features, fully integrated development tools and worldwide support.

Wind River Vxworks Delivers a proven combination of high-performance determinism with a flexible modular architecture to optimize footprint and deliver unparalleled scalability, advanced security, and comprehensive multicore options.

12.3 Documentation Support

To receive notification of documentation updates, navigate to the device product folder on ti.com (66AK2H14, 66AK2H12, 66AK2H06). In the upper right corner, click on *Alert me* to register and receive a weekly digest of any product information that has changed. For change details, review the revision history included in any revised document.

The current documentation that describes the DSP, related peripherals, and other technical collateral is listed below.

Errata

66AK2H06/12/14 Multicore DSP+ARM KeyStone II SOC Silicon Errata
Describes the silicon updates to the functional specifications for the 66AK2H06/12/14 fixed- and floating-point digital signal processor.

Application Reports

SERDES Link Commissioning on KeyStone I and II Devices
Explains the SerDes transmit and receive parameters tuning, tools and some debug techniques for TI Keystone I and Keystone II devices.

TI DSP Benchmarking Provides benchmarks for the C674x DSP core, the C66x DSP core and the ARM Cortex-A15 core.

Copyright © 2012–2017, Texas Instruments Incorporated

Throughput Performance Guide for KeyStone II Devices
Analyzes various performance measurements of the KeyStone II family of processors. It provides a throughput analysis of the various support peripherals to different end-points and memory access.

Keystone II DDR3 Debug Guide
Provides tools for use when debugging a failing DDR3 interface on a KeyStone II device.

Keystone II DDR3 Initialization
Provides a step-to-step initialization guide for the Keystone II device DDR3 SDRAM controller.

DDR3 Design Requirements for KeyStone Devices
Provides implementation instructions for the DDR3 interface incorporated in the TI KeyStone series of DSP devices. The DDR3 interface supports 1600 MT/s and lower memory speeds in a variety of topologies.

Hardware Design Guide for KeyStone II Devices
Describes hardware system design considerations for the KeyStone II family of processors. This design guide is intended to be used as an aid during the development of application hardware. Other aids including, but not limited to, device data manuals and explicit collateral should also be used.

Multicore Programming Guide Presents a programming methodology for converting applications to run on multicore devices.

PCIe Use Cases for KeyStone Devices Gives examples of PCIe usage in KeyStone devices including address translation, multidevice connection, and programming examples.

The C6000 EABI Migration Guide Describes the C6000 compiler tools embedded application binary interface (EABI).

Clocking Design Guide for KeyStone Devices Covers the general concept of AC and DC clock coupling, terminations, and the impact of incorrect connections on the DSP and selected clock source.

Thermal Design Guide for KeyStone Devices Provides specific information and considerations regarding thermal design requirements for all Keystone DSP processors.

Optimizing Loops on the C66x DSP Presents strategies and examples for improving performance of C/C++ applications.

User's Guides

ARM Optimizing C/C++ Compiler
Explains how to use these compiler tools: compiler, library build utility, and C++ name demangler.

ARM Assembly Language Tools
Explains how to use these object file tools: Assembler, archiver, linker, library information archiver, absolute lister, cross-reference lister, disassembler, object file display utility, name utility, strip utility, and hex conversion utility.

KeyStone Architecture Phase Locked Loop (PLL) Controller User's Guide
Describes the operation of the KeyStone software-programmable phase-locked loop (PLL) Controller. The PLL Controller offers flexibility and convenience by way of software-configurable multipliers and dividers to modify the input signal internally. The resulting clock outputs are passed to the CorePacs, peripherals, and other modules inside the device.

KeyStone II Architecture Serializer/Deserializer (SerDes) User's Guide
The SerDes performs serial-to-parallel conversions on data received from a peripheral device and parallel-to-serial conversion on data received from the CPU. The SerDes includes control capability and a processor interrupt system that can be tailored to minimize software management of the communications link.

KeyStone Architecture Enhanced Direct Memory Access 3 (EDMA3) User's Guide
Describes the Enhanced Direct Memory Access (EDMA3) controller. The primary purpose of the EDMA3 controller is to service data transfers that you program between two memory-mapped slave endpoints on the device.

KeyStone Architecture Multicore Navigator User's Guide
Describes the functionality, operational details, and programming information for the

Copyright © 2012–2017, Texas Instruments Incorporated

PKTDMA and the components of the QMSS in KeyStone architecture devices.

Keystone II Architecture DDR3 Memory Controller User's Guide
Describes how the DDR3 memory controller is used to interface with JESD79-3C standard compliant SDRAM devices. Memory types such as DDR1 SDRAM, DDR2 SDRAM, SDR SDRAM, SBSRAM, and asynchronous memories are not supported. The DDR3 memory controller SDRAM can be used for program and data storage.

KeyStone Architecture Power Sleep Controller (PSC) User's Guide
Describes the functionality, operational details, and programming information for the Power Sleep Controller (PSC) module in KeyStone architecture devices.

KeyStone II Architecture Universal Serial Bus 3.0 (USB 3.0) User's Guide
Describes the features, architecture, and details of the Universal Serial Bus 3.0 (USB 3.0) peripheral.

KeyStone Architecture Peripheral Component Interconnect Express (PCIe) User's Guide
Describes the features, architecture, and details of the Peripheral Component Interconnect Express (PCIe).

KeyStone II Architecture Debug and Trace User's Guide
Describes the capabilities of the trace features available through the debug architecture on KeyStone devices. Trace information can be gathered at the DSP core level or at the system level. The Debug Subsystem captures and exports trace data for both levels of trace. Trace is implemented as a nonintrusive debug tool within the KeyStone architecture, but can be selected to operate in both intrusive and nonintrusive mode depending on the amount of data the user wants to export.

KeyStone II Architecture ARM Bootloader User's Guide
Describes the features of the on-chip bootloader provided with the ARM Cortex-A15 processor.

KeyStone Architecture DSP Bootloader User's Guide
Describes the features of the on-chip bootloader provided with C66x_Digital Signal Processors (DSP).

KeyStone Architecture Gigabit Ethernet (GbE) Switch Subsystem User's Guide
Gives a functional description of the Ethernet Switch Subsystem and related portions of the Serializer/Deserializer (SerDes) module. The Ethernet Switch Subsystem consists of the Ethernet Media Access Controller (EMAC) module, Serial Gigabit Media Independent Interface (SGMII) modules, Physical Layer (PHY) device Management Data Input/Output (MDIO) module, Ethernet Switch module, and other associated submodules that are integrated on the device.

TMS320C66x DSP CorePac User's Guide
Provides an overview of the main components and features of the C66x CorePac.

KeyStone Architecture Memory Protection Unit (MPU) User's Guide
Describes the functionality, operational details, and programming information for the KeyStone Architecture Memory Protection Unit (MPU).

KeyStone Architecture HyperLink User's Guide
Provides a high-speed, low-latency, and low-pin-count communication interface that extends the internal CBA 3.x-based transactions between two KeyStone devices.

KeyStone II Architecture 10 Gigabit Ethernet Subsystem User's Guide
Gives a functional description of the 10 Gigabit Ethernet Switch Subsystem and related portions of the Serializer/Deserializer (SerDes) module. The Ethernet Switch Subsystem consists of the Ethernet Media Access Controller (EMAC) module, Serial Gigabit Media Independent Interface (SGMII) modules, Physical Layer (PHY) device Management Data Input/Output (MDIO) module, Ethernet Switch module, and other associated submodules that are integrated on the device.

KeyStone Architecture Security Accelerator (SA) User's Guide
Provides hardware engines to perform encryption, decryption, and authentication operations on packets for commonly supported protocols, including IPsec ESP and AH, SRTP, and Air Cipher. The SA also provides the hardware modules to assist the host in generating public keys and random numbers.

KeyStone II Architecture Multicore Shared Memory Controller (MSMC) User's Guide
The MSMC manages traffic among ARM CorePacs, multiple C66x CorePacs, DMA, other

Copyright © 2012–2017, Texas Instruments Incorporated

mastering peripherals, and the EMIF in a multicore device. MSMC also provides a shared on-chip SRAM that is accessible by all the CorePacs and the mastering peripherals on the device. MSMC provides memory protection for accesses to the MSMC SRAM and DDR3 memory from system masters.

KeyStone Architecture Serial Rapid IO (SRIO) User's Guide
Describes the general operation of SRIO, how this module is connected to the outside world, the features supported, SRIO registers, and examples of channel and queue operations.

KeyStone II Architecture ARM CorePac User's Guide
Describes the ARM CorePac in the KeyStone II Architecture, but it does not describe the details of the ARM core itself.

KeyStone Architecture Packet Accelerator (PA) User's Guide
One of the main components of the network coprocessor (NETCP) peripheral, the PA works together with the security accelerator (SA) and the gigabit Ethernet switch subsystem to form a network processing solution. The purpose of PA in the NETCP is to perform packet processing operations such as packet header classification, checksum generation, and multiqueue routing.

KeyStone Architecture Serial Peripheral Interface (SPI) User's Guide
Describes the features, architecture and registers associated with the serial peripheral interface (SPI) module.

KeyStone Architecture Chip Interrupt Controller (CIC) User's Guide
Describes the functionality, operational details, and programming information for the KeyStone Architecture Chip Interrupt Controller (CIC).

KeyStone Architecture Timer 64P User's Guide
Provides an overview of the 64-bit timer in the KeyStone Architecture devices. The timer can be configured as a general-purpose 64-bit timer, dual general-purpose 32-bit timers, or a watchdog timer. When configured as dual 32-bit timers, each half can operate in conjunction (chain mode) or independently (unchained mode) of each other.

KeyStone Architecture Inter-IC control Bus (I^2C) User's Guide
Describes the inter-integrated circuit (I2C) module in the KeyStone Architecture Digital Signal Processor (DSP). The I2C provides an interface between the KeyStone device and other devices compliant with Philips Semiconductors Inter-IC bus (I2C-bus) specification version 2.1 and connected by way of an I2C-bus. This document assumes the reader is familiar with the I2C-bus specification.

KeyStone Architecture External Memory Interface (EMIF16) User's Guide
Describes the operation of the External Memory Interface (EMIF16) module in the KeyStone DSP family (refer to the device data manual for applicability to a particular part). The EMIF16 module is accessible across all the cores and all system masters that are not cores.

TMS320C66x DSP Cache User's Guide
Describes how the cache-based memory system of the C66x DSP can be efficiently used in DSP applications. The internal memory architecture of these devices is organized in a two-level hierarchy consisting of a dedicated program memory (L1P) and a dedicated data memory (L1D) on the first level. Accesses by the core to the these first level memories can complete without core pipeline stalls.

KeyStone Architecture General-Purpose Input/Output (GPIO) User's Guide
Describes the general-purpose input/output (GPIO) peripheral in the KeyStone digital signal processors (DSPs).

KeyStone Architecture Universal Asynchronous Receiver/Transmitter (UART) User's Guide
Performs serial-to-parallel conversions on data received from a peripheral device and parallel-to-serial conversion on data received from the CPU. The UART includes control capability and a processor interrupt system that can be tailored to minimize software management of the communications link.

TMS320C66x DSP CPU and Instruction Set Reference Guide
Describes the CPU architecture, pipeline, instruction set, and interrupts of the C66x DSP.

KeyStone Architecture Network Coprocessor (NETCP) User's Guide
Describes the network coprocessor (NETCP) hardware accelerator that processes data packets with a main focus on processing Ethernet packets. NETCP has two gigabit Ethernet (GbE) modules to send and receive packets from an IEEE 802.3 compliant network, a packet accelerator (PA) to perform packet classification operations such as header matching,

Copyright © 2012–2017, Texas Instruments Incorporated

and packet modification operations such as checksum generation, A and a security accelerator (SA) to encrypt and decrypt data packets.

White Papers

Multicore SoCs Stay a Step Ahead of SoC FPGAs
Describes the differences between SoCs and FPGAs. Recently, the integration of ARM Cortex-A cores into FPGAs and compute-intense cores could lead one to believe that the paths of true multicore SoCs and these so-called FPGA SoCs had converged. A closer examination reveals that in reality they are still very far apart and that true multicore SoCs offer increasing advantages in those critical areas required by today's demanding products.

Save Power and Costs With TI's K2E On-Chip Networking Features
Outlines the network subsystem and its associated accelerators on the latest members of the KeyStone II family, AM5K2Ex and 66AK2Ex devices, referred to collectively as K2E.

Keeping the "Green" in Network Function Virtualization
Provides analysis that will make it possible to reduce central office power consumption while also meeting the demands of the NFV architecture through deployment of the HP Proliant m800 cartridge.

KeyStone II-Based Processors: 10G Ethernet as an Optical Interface
Deals with how the 10GbE interface and the processing power of the processors based on KeyStone II architecture helps to address complex time-critical systems, like radar systems.

Differentiating AM5K2E02 and AM5K2E04 SoCs from Alternate ARM Cortex-A15 Devices
Discusses some of the differentiating features of TI's AM5K2E02 and AM5K2E04 processors based on ARM Cortex-A15 MPCores and TI's KeyStone architecture.

Getting Started on TI ARM Embedded Processor Development
Explores the fundamentals of embedded design that influence a system's architecture and, consequently, impact processor selection.

Accelerate Multicore Application Development With KeyStone Software
Explores how Texas Instruments KeyStone multicore SoCs offload many software functions into hardware AccelerationPacs or other architectural elements to reduce the amount of software needed and to automate many of the more complex multicore management tasks.

White Space – Potentials and Realities
Highlights the exciting new potential of white space, yet tempered with a few technical realities.

Enhancing the KeyStone II Multicore Architecture With ARM
Summarizes how multicore Cortex-A15 processors in the KeyStone II architecture enable optimum performance for embedded infrastructure applications.

A Better Way to Cloud
Explores the factors around the shifts in cloud computing and highlights the differences between traditional cloud computing and cloud computing-based on embedded processing.

Design Files

66AK2H14 66AK2H12 66AK2H106 AAW OrCAD Symbols
Provides spreadsheets of 66AK2H14, 66AK2H12, and 66AK2H106 AAW OrCAD symbols.

Other Documents

The Case for 10G Ethernet in Embedded Processing
Describes how Ethernet has kept its focus and added an order of magnitude bandwidth.

66AK2Hx KeyStone Multicore DSP+ARM System-on-Chips
Describes how the 66AK2Hx platform is TI's first to combine quad ARM Cortex-A15 MPCore processors with up to eight TMS320C66x high-performance DSPs using the KeyStone II multicore architecture.

Copyright © 2012–2017, Texas Instruments Incorporated

Multicore DSPs for High-Performance Video Coding
Describes how the multicore processors offer high-performance processing capabilities with full programmability in a cost- and power-optimized package.

Video Infrastructure - Applications of the K2E, K2H Platforms
Describes how the devices in the K2H platform are well suited to provide scale and density for video processing.

Industrial Imaging: Applications of the K2H and K2E Platforms
Describes how the Cortex-A15 processors enable developers to quickly and easily migrate existing software designs to the low-power, high-performance K2E and K2H platforms.

12.4 Related Links

Table 12-1 lists quick access links. Categories include technical documents, support and community resources, tools and software, and quick access to sample or buy.

Table 12-1. Related Links

PARTS	PRODUCT FOLDER	ORDER NOW	TECHNICAL DOCUMENTS	TOOLS & SOFTWARE	SUPPORT & COMMUNITY
66AK2H14	Click here	Click here	Click here	Click here	Click here
66AK2H12	Click here	Click here	Click here	Click here	Click here
66AK2H06	Click here	Click here	Click here	Click here	Click here

12.5 Community Resources

The following links connect to TI community resources. Linked contents are provided "AS IS" by the respective contributors. They do not constitute TI specifications and do not necessarily reflect TI's views; see TI's Terms of Use.

TI E2E™ Online Community The TI engineer-to-engineer (E2E) community was created to foster collaboration among engineers. At e2e.ti.com, you can ask questions, share knowledge, explore ideas and help solve problems with fellow engineers.

TI Embedded Processors Wiki Established to help developers get started with Embedded Processors from Texas Instruments and to foster innovation and growth of general knowledge about the hardware and software surrounding these devices.

12.6 Trademarks

KeyStone, SmartReflex, C6000, E2E are trademarks of Texas Instruments.
MPCore, NEON, CoreSight, ARM7 are trademarks of ARM Ltd or its subsidiaries.
ARM, Cortex, Jazelle, Thumb are registered trademarks of ARM Ltd or its subsidiaries.
Windows is a registered trademark of Microsoft Corp.
All other trademarks are the property of their respective owners.

12.7 Electrostatic Discharge Caution



This integrated circuit can be damaged by ESD. Texas Instruments recommends that all integrated circuits be handled with appropriate precautions. Failure to observe proper handling and installation procedures can cause damage.

ESD damage can range from subtle performance degradation to complete device failure. Precision integrated circuits may be more susceptible to damage because very small parametric changes could cause the device not to meet its published specifications.

12.8 Glossary

TI Glossary This glossary lists and explains terms, acronyms, and definitions.

Copyright © 2012–2017, Texas Instruments Incorporated

13 Mechanical, Packaging, and Orderable Information

13.1 Packaging Information

The following pages include mechanical, packaging, and orderable information. This information is the most current data available for the designated devices. This data is subject to change without notice and revision of this document. For browser-based versions of this data sheet, refer to the left-hand navigation.

Copyright © 2012–2017, Texas Instruments Incorporated

PACKAGE OUTLINE

AAW1517B

FCBGA - 3.62 mm max height

PLASTIC BALL GRID ARRAY

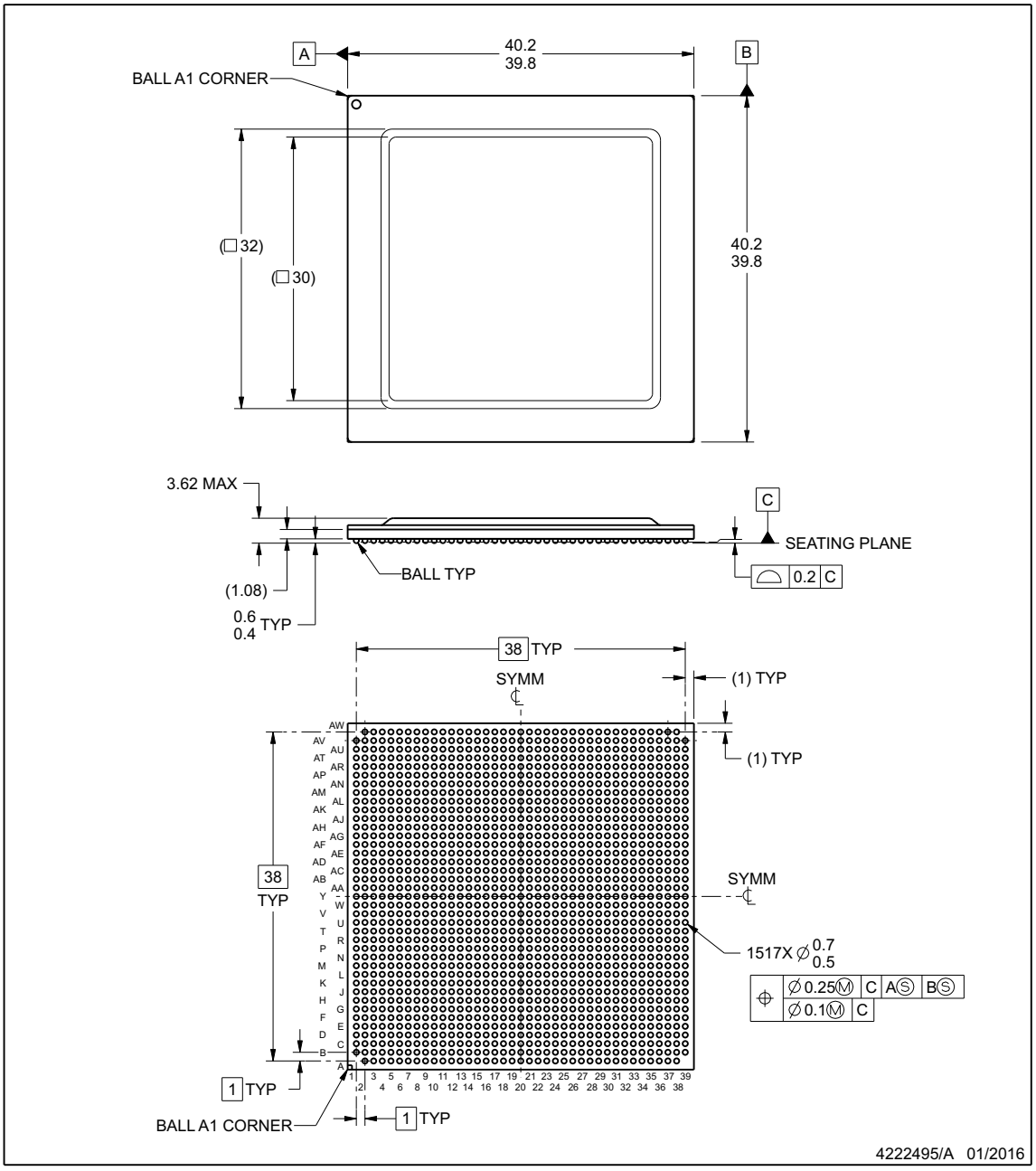

NOTES:

1. All linear dimensions are in millimeters. Any dimensions in parenthesis are for reference only. Dimensioning and tolerancing per ASME Y14.5M.
2. This drawing is subject to change without notice.

www.ti.com

Figure 13-1. Package Outline

EXAMPLE BOARD LAYOUT

AAW1517B — **FCBGA - 3.62 mm max height**

PLASTIC BALL GRID ARRAY

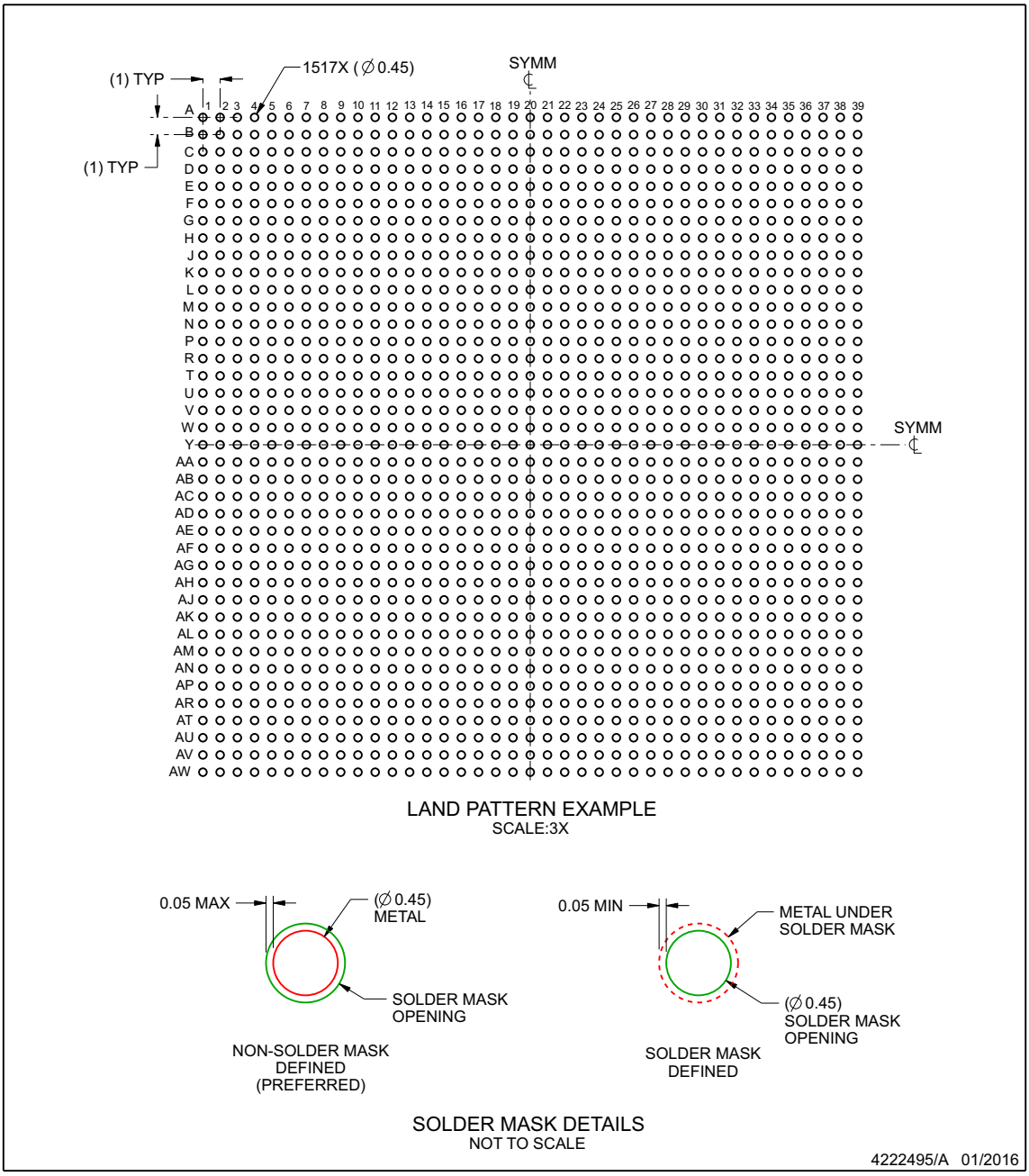

NOTES: (continued)

3. Final dimensions may vary due to manufacturing tolerance considerations and also routing constraints. For information, see Texas Instruments literature number SPRU811 (www.ti.com/lit/spru811).

www.ti.com

Figure 13-2. Example Board Layout

Copyright © 2012–2017, Texas Instruments Incorporated

EXAMPLE STENCIL DESIGN

AAW1517B — **FCBGA - 3.62 mm max height**

PLASTIC BALL GRID ARRAY

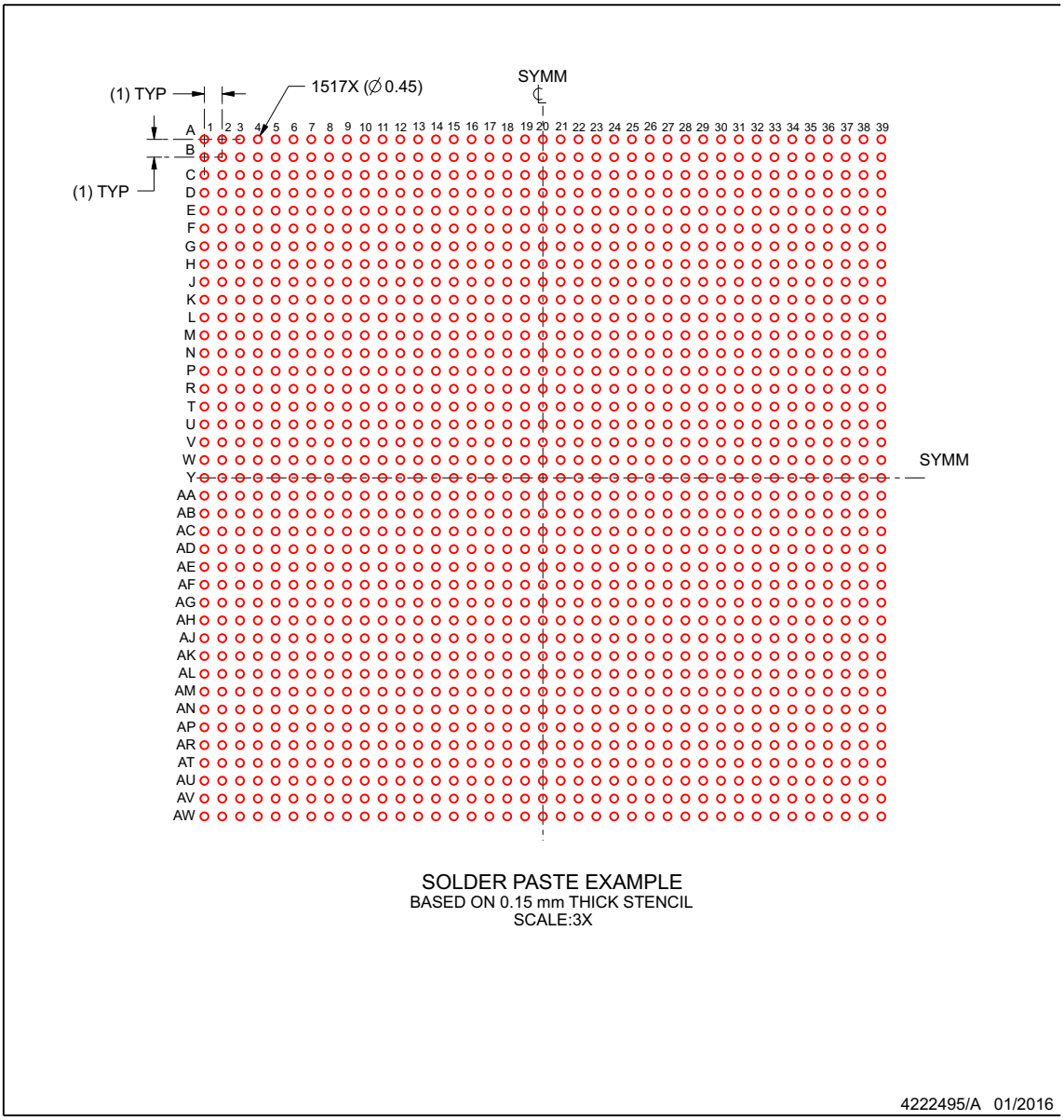

NOTES: (continued)

4. Laser cutting apertures with trapezoidal walls and rounded corners may offer better paste release.

www.ti.com

Figure 13-3. Example Stencil Design

PACKAGING INFORMATION

Orderable part number	Status (1)	Material type (2)	Package | Pins	Package qty | Carrier	RoHS (3)	Lead finish/ Ball material (4)	MSL rating/ Peak reflow (5)	Op temp (°C)	Part marking (6)
66AK2H05DAAW2.B	Active	Production	FCBGA (AAW) | 1517	21 | JEDEC TRAY (5+1)	Yes	Call TI	Level-4-245C-72HR	0 to 85	66AK2H05AAW @2012 TI
66AK2H06DAAW2	Active	Production	FCBGA (AAW) | 1517	21 | JEDEC TRAY (5+1)	Yes	Call TI	Level-4-245C-72HR	0 to 85	66AK2H06AAW @2012 TI
66AK2H06DAAW2.B	Active	Production	FCBGA (AAW) | 1517	21 | JEDEC TRAY (5+1)	Yes	Call TI	Level-4-245C-72HR	0 to 85	66AK2H06AAW @2012 TI
66AK2H06DAAW24	Active	Production	FCBGA (AAW) | 1517	21 | JEDEC TRAY (5+1)	Yes	Call TI	Level-4-245C-72HR	0 to 85	66AK2H06AAW @2012 TI 1.2GHZ/1.4GHZ
66AK2H06DAAW24.B	Active	Production	FCBGA (AAW) | 1517	21 | JEDEC TRAY (5+1)	Yes	Call TI	Level-4-245C-72HR	0 to 85	66AK2H06AAW @2012 TI 1.2GHZ/1.4GHZ
66AK2H06DAAWA2	Active	Production	FCBGA (AAW) | 1517	21 | JEDEC TRAY (5+1)	Yes	Call TI	Level-4-245C-72HR	-40 to 100	66AK2H06AAW @2012 TI A1.2GHZ
66AK2H06DAAWA2.B	Active	Production	FCBGA (AAW) | 1517	21 | JEDEC TRAY (5+1)	Yes	Call TI	Level-4-245C-72HR	-40 to 100	66AK2H06AAW @2012 TI A1.2GHZ
66AK2H06DAAWA24	Active	Production	FCBGA (AAW) | 1517	21 | JEDEC TRAY (5+1)	Yes	Call TI	Level-4-245C-72HR	-40 to 100	66AK2H06AAW @2012 TI A1.2GHZ/1.4GHZ
66AK2H06DAAWA24.B	Active	Production	FCBGA (AAW) | 1517	21 | JEDEC TRAY (5+1)	Yes	Call TI	Level-4-245C-72HR	-40 to 100	66AK2H06AAW @2012 TI A1.2GHZ/1.4GHZ
66AK2H12DAAW2	Active	Production	FCBGA (AAW) | 1517	21 | JEDEC TRAY (5+1)	Yes	Call TI	Level-4-245C-72HR	0 to 85	66AK2H12AAW @2012 TI
66AK2H12DAAW2.B	Active	Production	FCBGA (AAW) | 1517	21 | JEDEC TRAY (5+1)	Yes	Call TI	Level-4-245C-72HR	0 to 85	66AK2H12AAW @2012 TI
66AK2H12DAAW24	Active	Production	FCBGA (AAW) | 1517	21 | JEDEC TRAY (5+1)	Yes	Call TI	Level-4-245C-72HR	0 to 85	66AK2H12AAW @2012 TI 1.2GHZ/1.4GHZ
66AK2H12DAAW24.B	Active	Production	FCBGA (AAW) | 1517	21 | JEDEC TRAY (5+1)	Yes	Call TI	Level-4-245C-72HR	0 to 85	66AK2H12AAW @2012 TI 1.2GHZ/1.4GHZ

Orderable part number	Status (1)	Material type (2)	Package | Pins	Package qty | Carrier	RoHS (3)	Lead finish/ Ball material (4)	MSL rating/ Peak reflow (5)	Op temp (°C)	Part marking (6)
66AK2H12DAAWA2	Active	Production	FCBGA (AAW) | 1517	21 | JEDEC TRAY (5+1)	Yes	Call TI	Level-4-245C-72HR	-40 to 100	66AK2H12AAW @2012 TI A1.2GHZ
66AK2H12DAAWA2.B	Active	Production	FCBGA (AAW) | 1517	21 | JEDEC TRAY (5+1)	Yes	Call TI	Level-4-245C-72HR	-40 to 100	66AK2H12AAW @2012 TI A1.2GHZ
66AK2H12DAAWA24	Active	Production	FCBGA (AAW) | 1517	21 | JEDEC TRAY (5+1)	Yes	Call TI	Level-4-245C-72HR	-40 to 100	66AK2H12AAW @2012 TI A1.2GHZ/1.4GHZ
66AK2H12DAAWA24.B	Active	Production	FCBGA (AAW) | 1517	21 | JEDEC TRAY (5+1)	Yes	Call TI	Level-4-245C-72HR	-40 to 100	66AK2H12AAW @2012 TI A1.2GHZ/1.4GHZ
66AK2H12DXAAWA24	Active	Production	FCBGA (AAW) | 1517	21 | JEDEC TRAY (5+1)	Yes	Call TI	Level-4-245C-72HR	-40 to 100	66AK2H12XAAW @2012 TI A1.2GHZ/1.4GHZ
66AK2H14DAAW24	Active	Production	FCBGA (AAW) | 1517	21 | JEDEC TRAY (5+1)	Yes	Call TI	Level-4-245C-72HR	0 to 85	66AK2H14AAW @2012 TI 1.2GHZ/1.4GHZ
66AK2H14DAAW24.B	Active	Production	FCBGA (AAW) | 1517	21 | JEDEC TRAY (5+1)	Yes	Call TI	Level-4-245C-72HR	0 to 85	66AK2H14AAW @2012 TI 1.2GHZ/1.4GHZ
66AK2H14DAAWA24	Active	Production	FCBGA (AAW) | 1517	21 | JEDEC TRAY (5+1)	Yes	Call TI	Level-4-245C-72HR	-40 to 100	66AK2H14AAW @2012 TI A1.2GHZ/1.4GHZ
66AK2H14DAAWA24.B	Active	Production	FCBGA (AAW) | 1517	21 | JEDEC TRAY (5+1)	Yes	Call TI	Level-4-245C-72HR	-40 to 100	66AK2H14AAW @2012 TI A1.2GHZ/1.4GHZ
66AK2H14DXAAWA24	Active	Production	FCBGA (AAW) | 1517	21 | JEDEC TRAY (5+1)	Yes	Call TI	Level-4-245C-72HR	-40 to 100	66AK2H14XAAW @2012 TI A1.2GHZ/1.4GHZ

(1) **Status:** For more details on status, see our product life cycle.

(2) **Material type:** When designated, preproduction parts are prototypes/experimental devices, and are not yet approved or released for full production. Testing and final process, including without limitation quality assurance, reliability performance testing, and/or process qualification, may not yet be complete, and this item is subject to further changes or possible discontinuation. If available for ordering, purchases will be subject to an additional waiver at checkout, and are intended for early internal evaluation purposes only. These items are sold without warranties of any kind.

(3) **RoHS values:** Yes, No, RoHS Exempt. See the TI RoHS Statement for additional information and value definition.

(4) **Lead finish/Ball material:** Parts may have multiple material finish options. Finish options are separated by a vertical ruled line. Lead finish/Ball material values may wrap to two lines if the finish value exceeds the maximum column width.

(5) **MSL rating/Peak reflow:** The moisture sensitivity level ratings and peak solder (reflow) temperatures. In the event that a part has multiple moisture sensitivity ratings, only the lowest level per JEDEC standards is shown. Refer to the shipping label for the actual reflow temperature that will be used to mount the part to the printed circuit board.

(6) **Part marking:** There may be an additional marking, which relates to the logo, the lot trace code information, or the environmental category of the part.

Multiple part markings will be inside parentheses. Only one part marking contained in parentheses and separated by a "~" will appear on a part. If a line is indented then it is a continuation of the previous line and the two combined represent the entire part marking for that device.

Important Information and Disclaimer: The information provided on this page represents TI's knowledge and belief as of the date that it is provided. TI bases its knowledge and belief on information provided by third parties, and makes no representation or warranty as to the accuracy of such information. Efforts are underway to better integrate information from third parties. TI has taken and continues to take reasonable steps to provide representative and accurate information but may not have conducted destructive testing or chemical analysis on incoming materials and chemicals. TI and TI suppliers consider certain information to be proprietary, and thus CAS numbers and other limited information may not be available for release.

In no event shall TI's liability arising out of such information exceed the total purchase price of the TI part(s) at issue in this document sold by TI to Customer on an annual basis.

TRAY

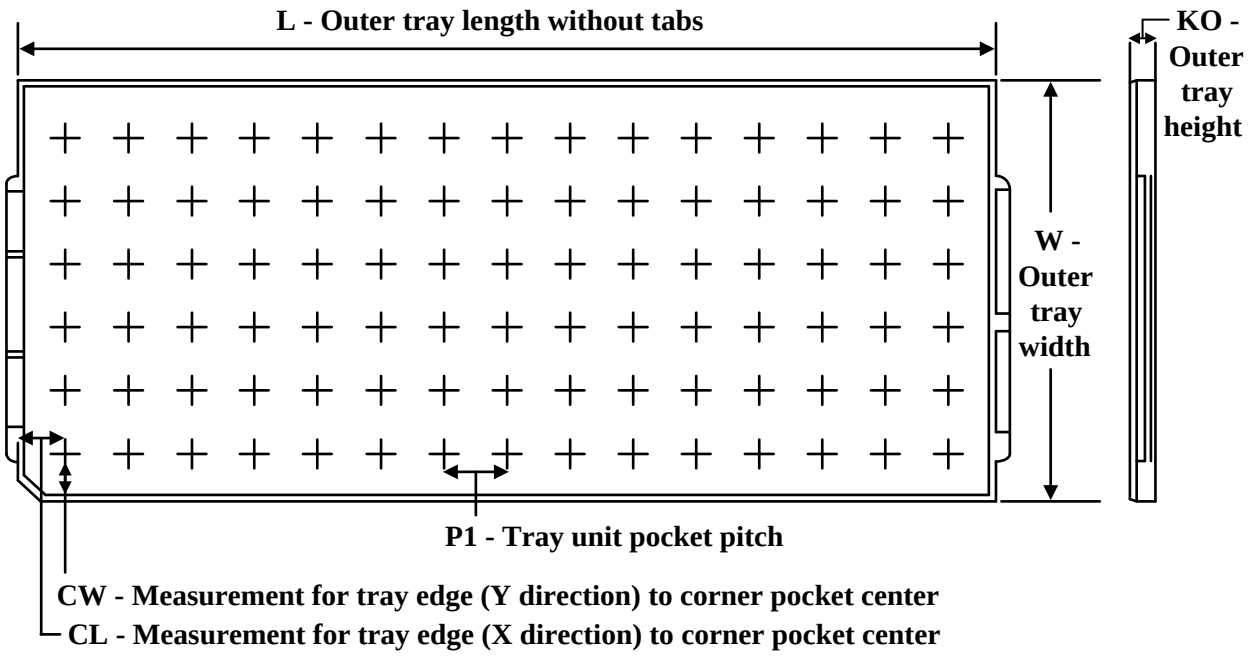

Chamfer on Tray corner indicates Pin 1 orientation of packed units.

*All dimensions are nominal

Device	Package Name	Package Type	Pins	SPQ	Unit array matrix	Max temperature (°C)	L (mm)	W (mm)	K0 (µm)	P1 (mm)	CL (mm)	CW (mm)
66AK2H05DAAW2.B	AAW	FCBGA	1517	21	3x7	150	315	135.9	7620	42.3	30.6	25.65
66AK2H06DAAW2	AAW	FCBGA	1517	21	3x7	150	315	135.9	7620	42.3	30.6	25.65
66AK2H06DAAW2.B	AAW	FCBGA	1517	21	3x7	150	315	135.9	7620	42.3	30.6	25.65
66AK2H06DAAW24	AAW	FCBGA	1517	21	3x7	150	315	135.9	7620	42.3	30.6	25.65
66AK2H06DAAW24.B	AAW	FCBGA	1517	21	3x7	150	315	135.9	7620	42.3	30.6	25.65
66AK2H06DAAWA2	AAW	FCBGA	1517	21	3x7	150	315	135.9	7620	42.3	30.6	25.65
66AK2H06DAAWA2.B	AAW	FCBGA	1517	21	3x7	150	315	135.9	7620	42.3	30.6	25.65
66AK2H06DAAWA24	AAW	FCBGA	1517	21	3x7	150	315	135.9	7620	42.3	30.6	25.65
66AK2H06DAAWA24.B	AAW	FCBGA	1517	21	3x7	150	315	135.9	7620	42.3	30.6	25.65
66AK2H12DAAW2	AAW	FCBGA	1517	21	3x7	150	315	135.9	7620	42.3	30.6	25.65
66AK2H12DAAW2.B	AAW	FCBGA	1517	21	3x7	150	315	135.9	7620	42.3	30.6	25.65
66AK2H12DAAW24	AAW	FCBGA	1517	21	3x7	150	315	135.9	7620	42.3	30.6	25.65
66AK2H12DAAW24.B	AAW	FCBGA	1517	21	3x7	150	315	135.9	7620	42.3	30.6	25.65
66AK2H12DAAWA2	AAW	FCBGA	1517	21	3x7	150	315	135.9	7620	42.3	30.6	25.65
66AK2H12DAAWA2.B	AAW	FCBGA	1517	21	3x7	150	315	135.9	7620	42.3	30.6	25.65
66AK2H12DAAWA24	AAW	FCBGA	1517	21	3x7	150	315	135.9	7620	42.3	30.6	25.65
66AK2H12DAAWA24.B	AAW	FCBGA	1517	21	3x7	150	315	135.9	7620	42.3	30.6	25.65

Device	Package Name	Package Type	Pins	SPQ	Unit array matrix	Max temperature (°C)	L (mm)	W (mm)	K0 (µm)	P1 (mm)	CL (mm)	CW (mm)
66AK2H12DXAAWA24	AAW	FCBGA	1517	21	3x7	150	315	135.9	7620	42.3	30.6	25.65
66AK2H14DAAW24	AAW	FCBGA	1517	21	3x7	150	315	135.9	7620	42.3	30.6	25.65
66AK2H14DAAW24.B	AAW	FCBGA	1517	21	3x7	150	315	135.9	7620	42.3	30.6	25.65
66AK2H14DAAWA24	AAW	FCBGA	1517	21	3x7	150	315	135.9	7620	42.3	30.6	25.65
66AK2H14DAAWA24.B	AAW	FCBGA	1517	21	3x7	150	315	135.9	7620	42.3	30.6	25.65
66AK2H14DXAAWA24	AAW	FCBGA	1517	21	3x7	150	315	135.9	7620	42.3	30.6	25.65

IMPORTANT NOTICE AND DISCLAIMER

TI PROVIDES TECHNICAL AND RELIABILITY DATA (INCLUDING DATASHEETS), DESIGN RESOURCES (INCLUDING REFERENCE DESIGNS), APPLICATION OR OTHER DESIGN ADVICE, WEB TOOLS, SAFETY INFORMATION, AND OTHER RESOURCES “AS IS” AND WITH ALL FAULTS, AND DISCLAIMS ALL WARRANTIES, EXPRESS AND IMPLIED, INCLUDING WITHOUT LIMITATION ANY IMPLIED WARRANTIES OF MERCHANTABILITY, FITNESS FOR A PARTICULAR PURPOSE OR NON-INFRINGEMENT OF THIRD PARTY INTELLECTUAL PROPERTY RIGHTS.

These resources are intended for skilled developers designing with TI products. You are solely responsible for (1) selecting the appropriate TI products for your application, (2) designing, validating and testing your application, and (3) ensuring your application meets applicable standards, and any other safety, security, regulatory or other requirements.

These resources are subject to change without notice. TI grants you permission to use these resources only for development of an application that uses the TI products described in the resource. Other reproduction and display of these resources is prohibited. No license is granted to any other TI intellectual property right or to any third party intellectual property right. TI disclaims responsibility for, and you fully indemnify TI and its representatives against any claims, damages, costs, losses, and liabilities arising out of your use of these resources.

TI’s products are provided subject to TI’s Terms of Sale, TI’s General Quality Guidelines, or other applicable terms available either on ti.com or provided in conjunction with such TI products. TI’s provision of these resources does not expand or otherwise alter TI’s applicable warranties or warranty disclaimers for TI products. Unless TI explicitly designates a product as custom or customer-specified, TI products are standard, catalog, general purpose devices.

TI objects to and rejects any additional or different terms you may propose.

Copyright © 2025, Texas Instruments Incorporated

Last updated 10/2025

Looking for pricing, stock, or lifecycle information?

Click below to explore more details on WIN SOURCE:

- View 66AK2H12BXAAW2 on WIN SOURCE
- Texas Instruments Information

Optimize Your Supply Chain with WIN SOURCE Solutions

- Global Sourcing Solution
- Obsolete Management
- Cost Control Management
- Shortage Management
- Alternative Solution
- Excess Inventory Management