THE DATASHEET OF

SDC36C.TCT

SDC36C
TVS Diode Array for Proximity Switch Input Protection

PROTECTION PRODUCTS

Description

The SDC36C is a high-surge transient voltage suppressor (TVS) optimized for protection of sensitive digital sensors used in proximity switches and industrial control applications. The SDC36C protects the components from over-voltages caused by **electrostatic discharge** (ESD), **electrical fast transients** (EFT), and tertiary **lightning**.

The unique design of the SDC36C incorporates two TVS diodes in a compact package for applications where board space is at a premium. The single package provides protection for the I/O line and power supply rail with high surge capabilities (2 Amps at t_p=1.2/50us) and an exceptionally low clamping voltage of <47V.

The SDC36C replaces up to two large discrete diodes providing the designer an easy to implement integrated solution. The SDC36C is in a 3-pin, RoHS/WEEE compliant, SOT-23 package. The small size and unique features of the SDC36C make it ideal for protection of two, three, and four wire DC high-side proximity switches.

Features

- 350 watts peak pulse power (t_p = 8/20µs)
- Transient protection for data and power lines to
  IEC 61000-4-2 (ESD) ±15kV (air), ±8kV (contact)
  IEC 61000-4-4 (EFT) 40A (5/50ns)
  IEC 61000-4-5 (Lightning) 2A (1.2/50µs)
- Replaces two discrete devices
- Low clamping voltage
- Low leakage current
- High surge capability
- Solid-state silicon avalanche technology

Mechanical Characteristics

- JEDEC SOT23 package
- RoHS/WEEE Compliant
- Molding compound flammability rating: UL 94V-0
- Marking : D36C
- Packaging : Tape and Reel

Applications

- Two, Three, and Four Wire DC High-Side Proximity Switches
- Digital Sensor Input Protection
- Industrial Controls
- 24V - 33V DC Supply Protection

Circuit Diagram

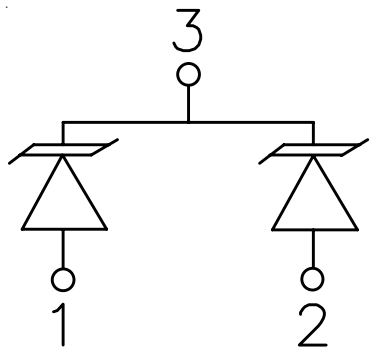

Schematic & PIN Configuration

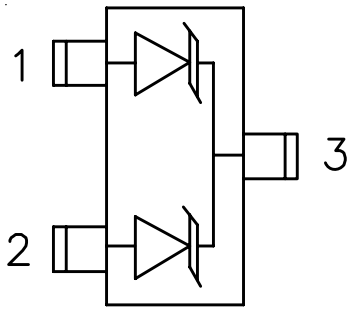

SOT23 (Top View)

Absolute Maximum Rating

Rating	Symbol	Value	Units
Peak Pulse Power (t_p = 8/20µs)	P_{pk}	350	Watts
Peak Pulse Power (t_p = 1.2/50µs)	P_{pk}	225	Watts
Peak Pulse Current (t_p = 1.2/50µs)	I_{PP}	4	A
Non-Repetitive Peak Forward Current (t_p=100µs)	I_{FSMAX}	4	A
Operating Temperature	T_J	-55 to +125	°C
Storage Temperature	T_{STG}	-55 to +150	°C

Electrical Characteristics (T=25°C)

SDC36B

Parameter	Symbol	Conditions	Minimum	Typical	Maximum	Units
Reverse Stand-Off Voltage	V_{RWM}	Pin 3 to 1 or Pin 2 to 1			33	V
Reverse Breakdown Voltage	V_{BR}	I_t = 1mA	35			V
Reverse Leakage Current	I_R	V_{RWM} = 33V, T=25°C			5	µA
Reverse Leakage Current	$I_{R(HOT)}$	V_{RWM} = 33V, T=85°C			25	µA
Forward Voltage	V_F	I_F= 100mA			1.3	V
Clamping Voltage	V_C	I_{PP} = 2A, tp = 1.2/50µs			47	V
Junction Capacitance	C_j	V_R = 0V, f = 1MHz			100	pF

Typical Characteristics

Non-Repetitive Peak Pulse Power vs. Pulse Time

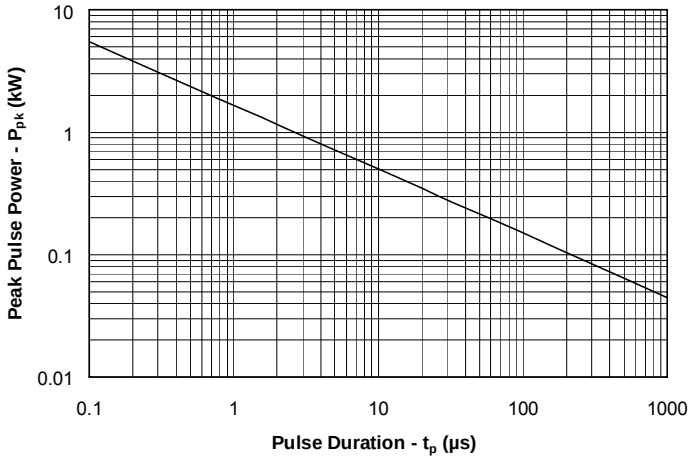

Power Derating Curve

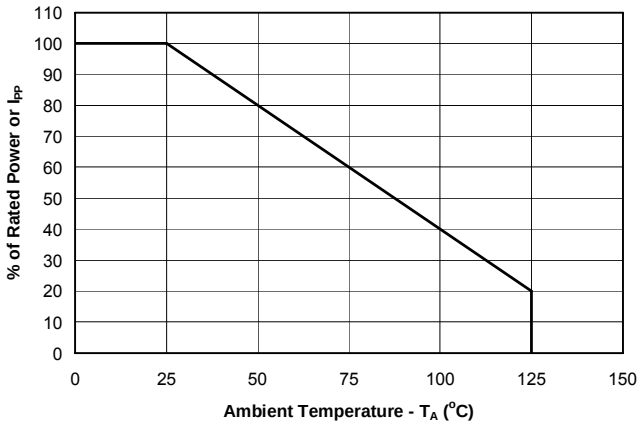

Pulse Waveform

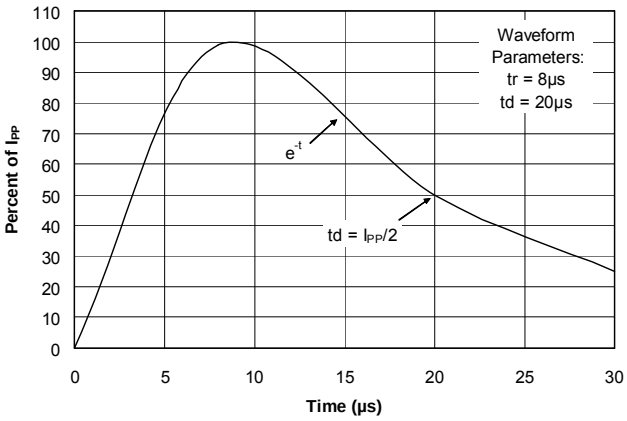

Clamping Voltage vs. Peak Pulse Current

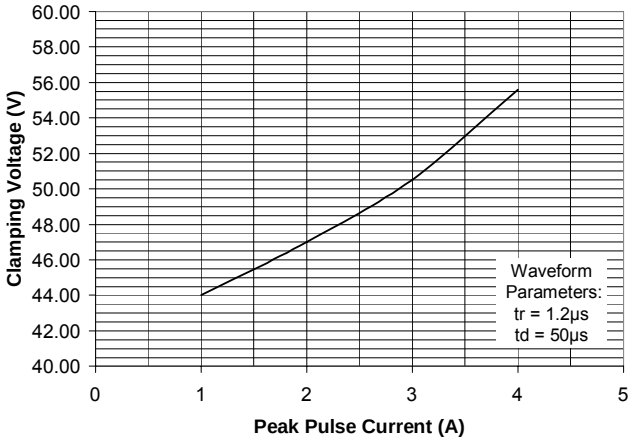

Forward Voltage vs. Forward Current

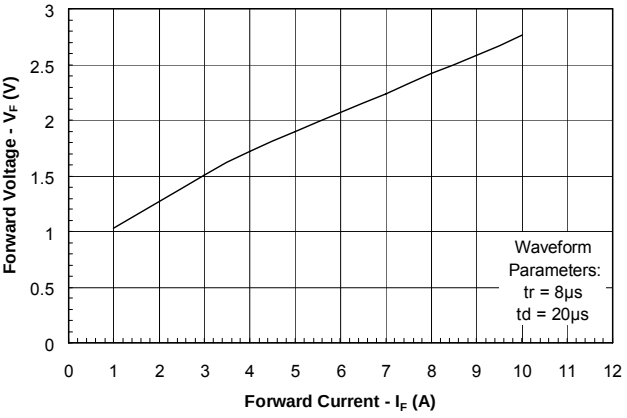

Applications Information

Device Connection for Protection of Two, Three, and Four Wire Proximity Switches

Digital sensors help to bridge the gap between the physical world and the digital world in applications such as computer controlled factory automation. In such environments, transient voltages can easily disrupt or damage sensitive sensor inputs. The SDC36C provides transient voltage protection for the digital sensors to ensure their operation is not disrupted by the physical world.

The SDC36C is designed to meet the high surge capability and low clamping voltage needed to protect the ASIC and control logic used in proximity switches. The SDC36C provides protection for the power and I/O lines. Typical configurations for the protection of two, three, and four wire switches are as follows:

1. Two-Wire Switch: Connect pin 1 to the I/O line and pin 2 to the DC supply (since the device is symmetrical, these connections can be reversed). Pin 3 is not connected.

2. Three-Wire Switch: Either pin 1 or pin 2 is connected to the I/O line with the other connected to ground. Pin 3 must be connected to the DC supply.

3. Four-Wire Switch: Two device are required to protect four wire switches. Pin 3 of each device is connected to the DC supply line. Pins 1 and 2 are connected to the I/O lines and ground as shown
.

Matte Tin Lead Finish

Matte tin has become the industry standard lead-free replacement for SnPb lead finishes. A matte tin finish is composed of 100% tin solder with large grains. Since the solder volume on the leads is small compared to the solder paste volume that is placed on the land pattern of the PCB, the reflow profile will be determined by the requirements of the solder paste. Therefore, these devices are compatible with both lead-free and SnPb assembly techniques. In addition, unlike other lead-free compositions, matte tin does not have any added alloys that can cause degradation of the solder joint.

2-Wire DC Proximity Switch Application

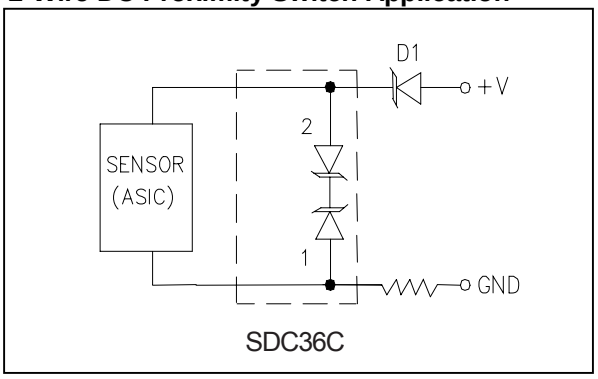

3-Wire DC Proximity Switch Application

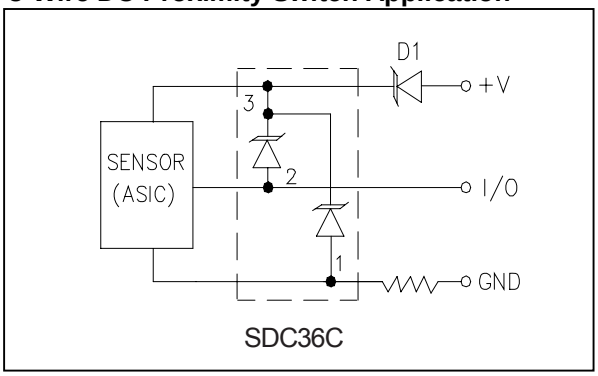

4-Wire DC Proximity Switch Application

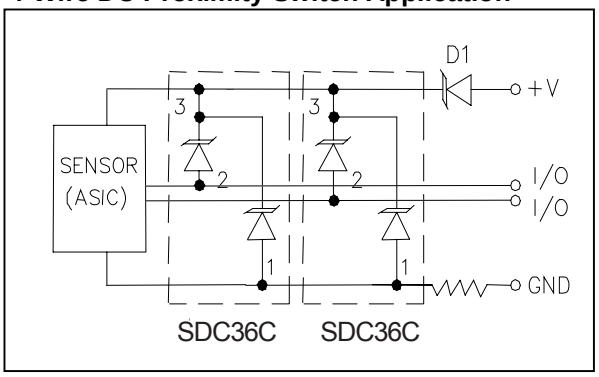

Outline Drawing - SOT23

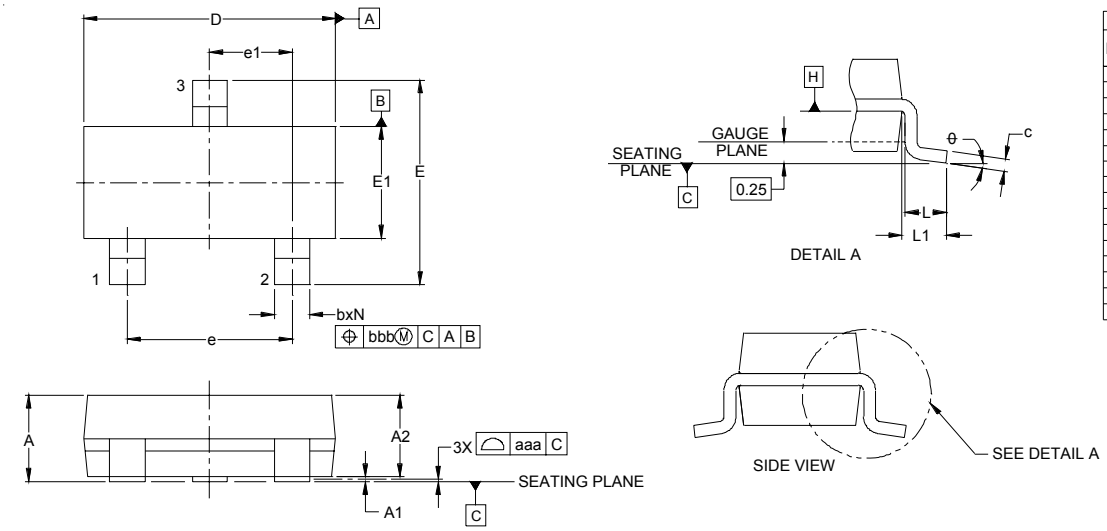

DIM	DIMENSIONS					
	INCHES			MILLIMETERS		
	MIN	NOM	MAX	MIN	NOM	MAX
A	.035	-	.044	0.89	-	1.12
A1	.000	-	.004	0.01	-	0.10
A2	.035	.037	.040	0.88	0.95	1.02
b	.012	-	.020	0.30	-	0.51
c	.003	-	.007	0.08	-	0.18
D	.110	.114	.120	2.80	2.90	3.04
E	.082	.093	.104	2.10	2.37	2.64
E1	.047	.051	.055	1.20	1.30	1.40
e	.075			1.90 BSC		
e1	.037			0.95 BSC		
L	.015	.020	.024	0.40	0.50	0.60
L1	.022			(0.55)		
N	3			3		
θ	0°	-	8°	0°	-	8°
aaa	.004			0.10		
bbb	.008			0.20		

NOTES:
1. CONTROLLING DIMENSIONS ARE IN MILLIMETERS (ANGLES IN DEGREES).
2. DATUMS -A- AND -B- TO BE DETERMINED AT DATUM PLANE -H-
3. DIMENSIONS "E1" AND "D" DO NOT INCLUDE MOLD FLASH, PROTRUSIONS OR GATE BURRS.

Land Pattern - SOT23

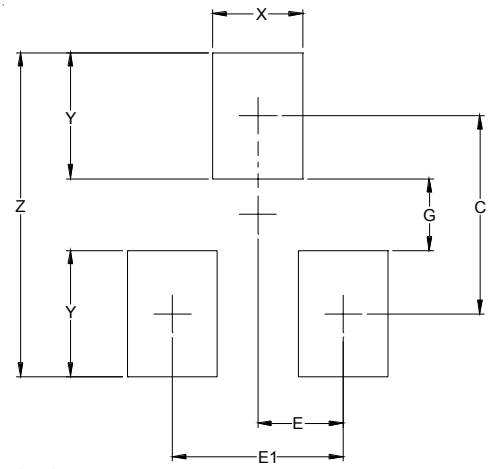

DIM	DIMENSIONS	
	INCHES	MILLIMETERS
C	(.087)	(2.20)
E	.037	0.95
E1	.075	1.90
G	.031	0.80
X	.039	1.00
Y	.055	1.40
Z	.141	3.60

NOTES:
1. THIS LAND PATTERN IS FOR REFERENCE PURPOSES ONLY CONSULT YOUR MANUFACTURING GROUP TO ENSURE YOUR COMPANY'S MANUFACTURING GUIDELINES ARE MET.
2. REFERENCE IPC-SM-782A.

Marking Code

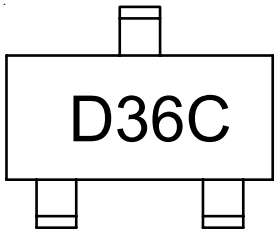

Ordering Information

Part Number	Lead Finish	Qty per Reel	Reel Size
SDC36C.TCT	Pb Free	3,000	7 Inch

Contact Information

Semtech Corporation
Protection Products Division
200 Flynn Rd., Camarillo, CA 93012
Phone: (805)498-2111 FAX (805)498-3804

Looking for pricing, stock, or lifecycle information?

Click below to explore more details on WIN SOURCE:

- View SDC36C.TCT on WIN SOURCE
- Semtech Corporation Information

Optimize Your Supply Chain with WIN SOURCE Solutions

- Global Sourcing Solution
- Obsolete Management
- Cost Control Management
- Shortage Management
- Alternative Solution
- Excess Inventory Management