WINSOURCE ELECTRONICS

THE DATASHEET OF

QPC7335SR

QPC7335

45MHz to 1002MHz Variable Equalizer

Product Description

The QPC7335 is a voltage controlled variable equalizer employing SOI attenuator, optimized for DOCSIS 3.1 operation between 45MHz and 1002MHz.

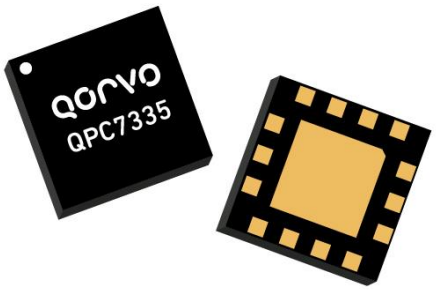

14 pin, 6.0 mm x 6.0 mm x 1.375 mm package

Functional Block Diagram

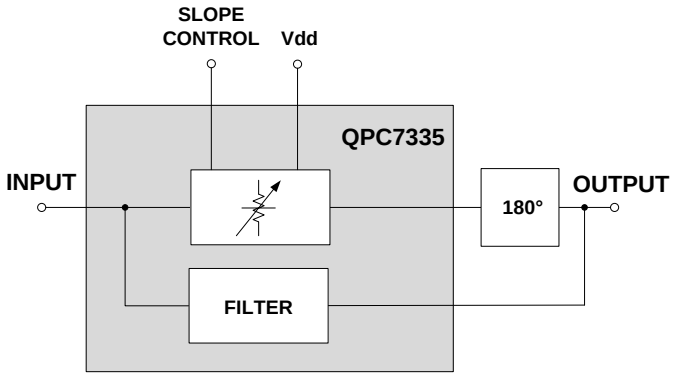

Product Features

- 45 – 1002 MHz Operational Bandwidth
- 18dB slope range
- Low insertion loss
- High linearity
- 75Ohm impedance for CATV applications
- 5V single supply voltage
- Low power consumption

Applications

CATV amplifier and transmission systems

Ordering Information

Part No.	Description
QPC7335SB	Sample bag 5 pcs
QPC7335SR	7” Reel with 100 pcs
QPC7335TR7	7” Reel with 500 pcs
QPC7335PCBA-410	Fully assembled Evaluation Board

Absolute Maximum Ratings

Parameter	Value / Range
Supply Voltage (Vdd)	-0.5 to +6V
Control Voltage (Vc)	-0.5 to +6V
Control Voltage 2 (Vc2)	-2 to +24V
MODE	-0.5 to +6V
Storage Temperature	−40 to 100 °C
RF Input Power	+30 dBm

Exceeding any one or a combination of the Absolute Maximum Rating conditions may cause permanent damage to the device. Extended application of Absolute Maximum Rating conditions to the device may reduce device reliability.

Recommended Operating Conditions

Parameter	Min	Typ	Max	Units
Supply Voltage (Vdd)		+5		V
Junction Temperature			+125	°C
Operating Temperature	-30		+100	°C

Electrical specifications are measured at specified test conditions in application circuit. Specifications are not guaranteed over all recommended operating conditions.

Electrical Specifications – Tested in Evaluation Circuit

Parameter	Conditions (Vdd=5V, T_{MB}=25°C, Z_S=Z_L=75Ω)	Min	Typ	Max	Units
General Performance					
Supply Current (I_{dd})			3		mA
Thermal Resistance			70		K/W
RF Input Power				27	dBm
Frequency Range		45		1002	MHz
Minimum Slope [1]	f= 45 to 1002MHz		0.7		dB
Maximum Slope [1]	f= 45 to 1002MHz		20		dB
RF Performance, slope set between 5dB and 15dB					
Insertion Loss (S21)	f= 1002MHz		2.6	3.0	dB
Flatness [2]	f= 45 to 1002MHz		0.6		dB
Input Return Loss (S11)	f= 45 to 1002MHz		-17		dB
Output Return Loss (S22)	f= 45 to 1002MHz		-18		dB
Input IP3	P_{IN} + ($IM3_{dBc}$/2) 6MHz tone spacing at 15dBm/tone		50		dBm
Input IP2	P_{IN} + $IM2_{dBc}$, IM2 is F1 + F2 6MHz tone spacing at 15dBm/tone		80		dBm
RF Performance, slope set between 1dB and 22dB					
Insertion Loss (S21)	f= 1002MHz		2.8		dB
Flatness [2]	f= 45 to 1002MHz		2		dB
Input Return Loss (S11)	f= 45 to 1002MHz		-16		dB
Output Return Loss (S22)	f= 45 to 1002MHz		-17		dB

Parameter	Conditions (Vdd=5V, T_{MB}=25°C, Z_S=Z_L=75Ω)	Min	Typ	Max	Units
Control					
Control Voltage (Vc) [3], positive slope control gradient	MODE = 0V, minimum slope at Vc = 0V	0	1 to 3	5	V
Control Voltage (Vc) [3], negative slope control gradient	MODE = 5V, minimum slope at Vc = 5V	0	2 to 4	5	V
Control Voltage 2 (Vc2) [3], positive slope control gradient	MODE = 0V, minimum slope at Vc2 = 0V	0	4 to 12	20	V
Control Voltage 2 (Vc2) [3], negative slope control gradient	MODE = 5V, minimum slope at Vc2 = 20V	0	8 to 16	20	V
MODE Pin Logic Low				0.4	V
MODE Pin Logic High		1			V

Notes:
1. Slope is defined as the difference between the gain at the start frequency and the gain at the stop frequency.
2. Flatness is defined as sum of positive and negative deviation from a straight line between gain at start frequency and gain at stop frequency.
3. Either Vc or Vc2 can be used to set slope, internal 1:4 voltage divider between Vc and Vc2.

QPC7335 Slope vs. Frequency, typical

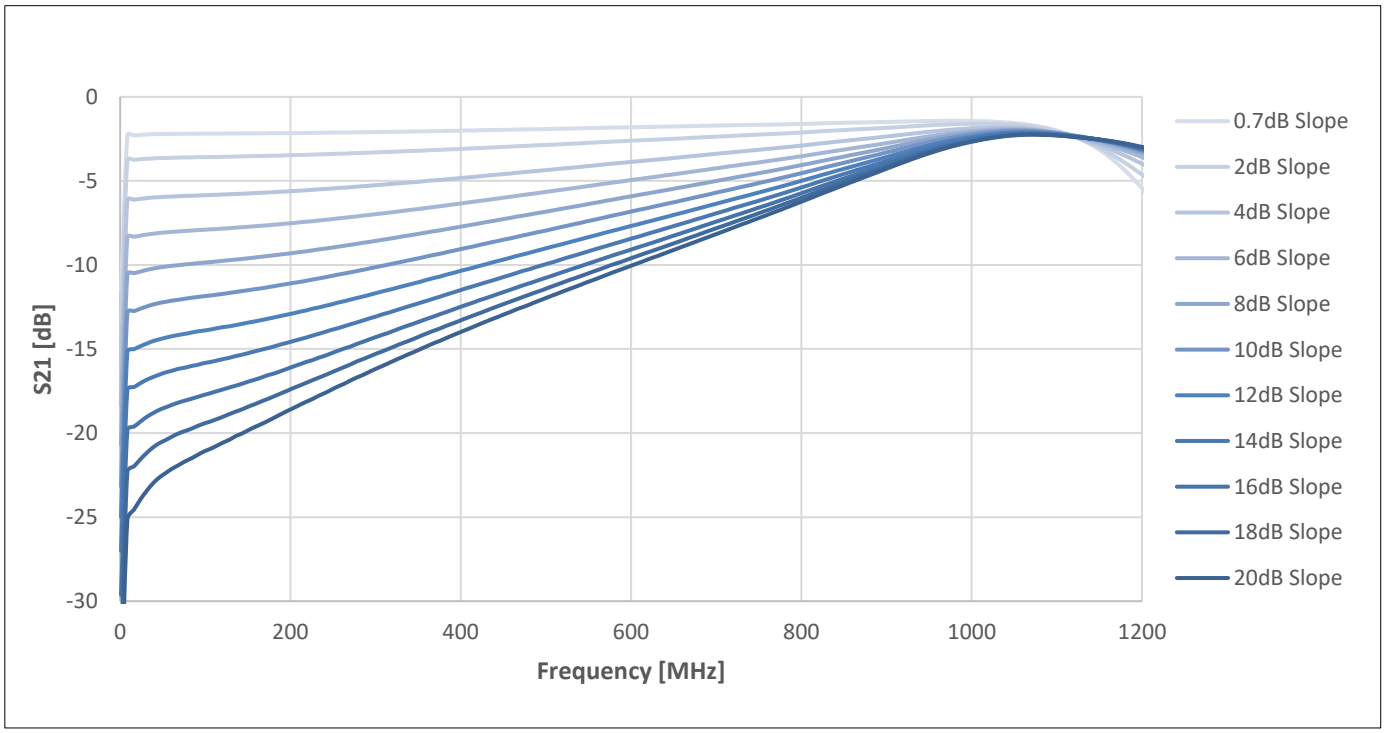

QPC7335 Input IP3 vs. Slope, typical

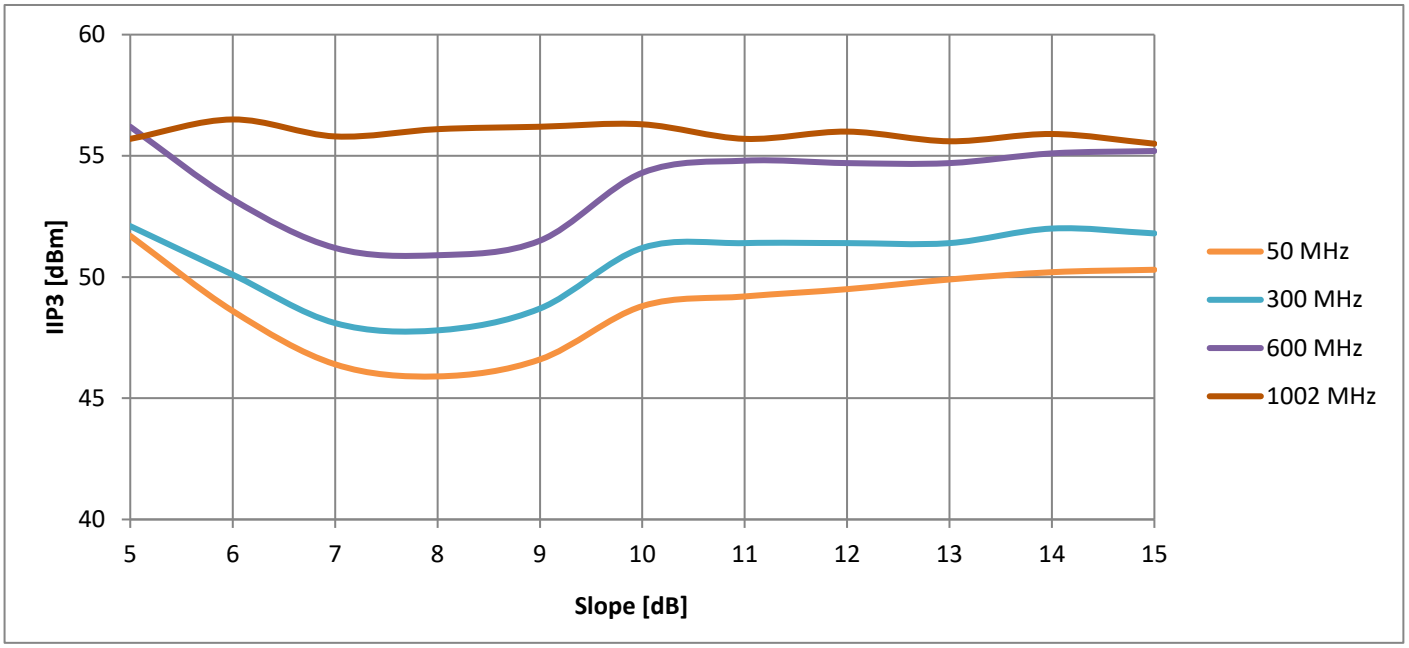

QPC7335 Flatness vs. Slope, typical

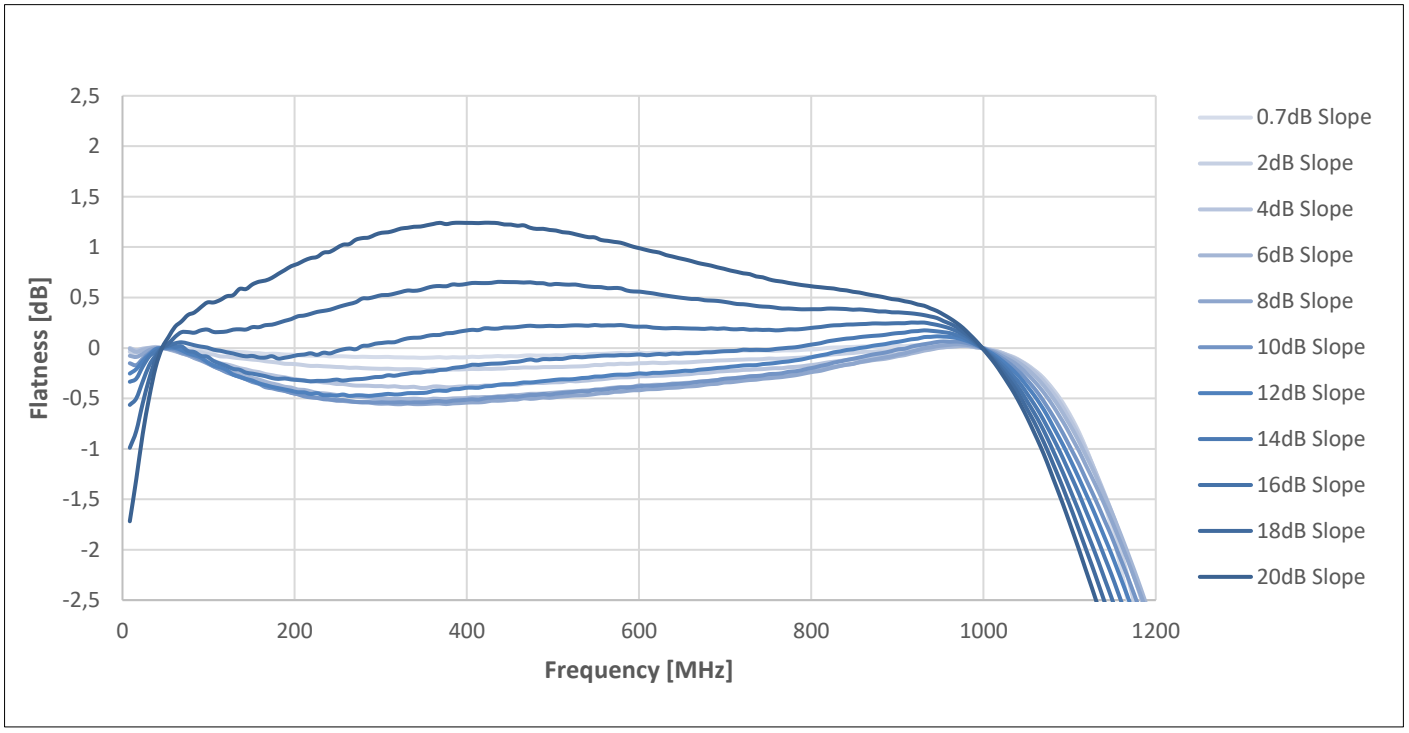

QPC7335 S11 vs. Slope, typical

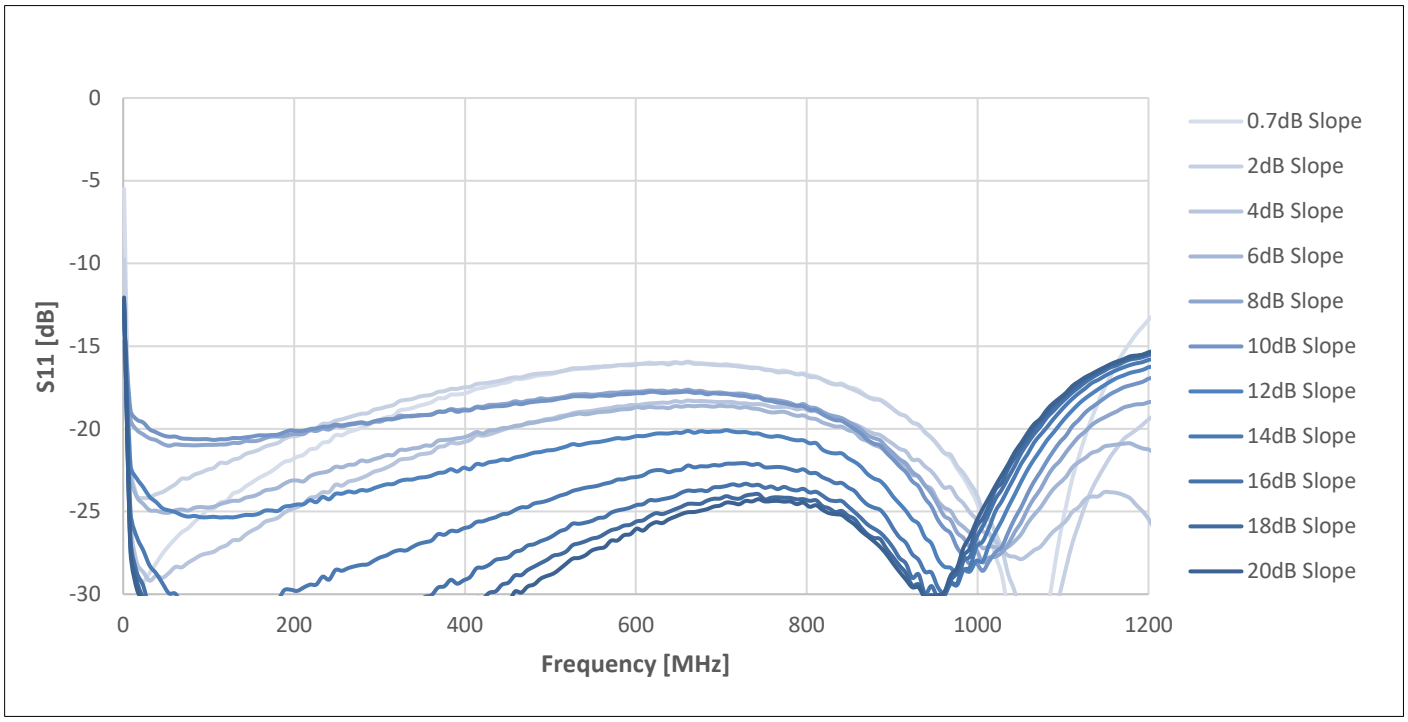

QPC7335 S22 vs. Slope, typical

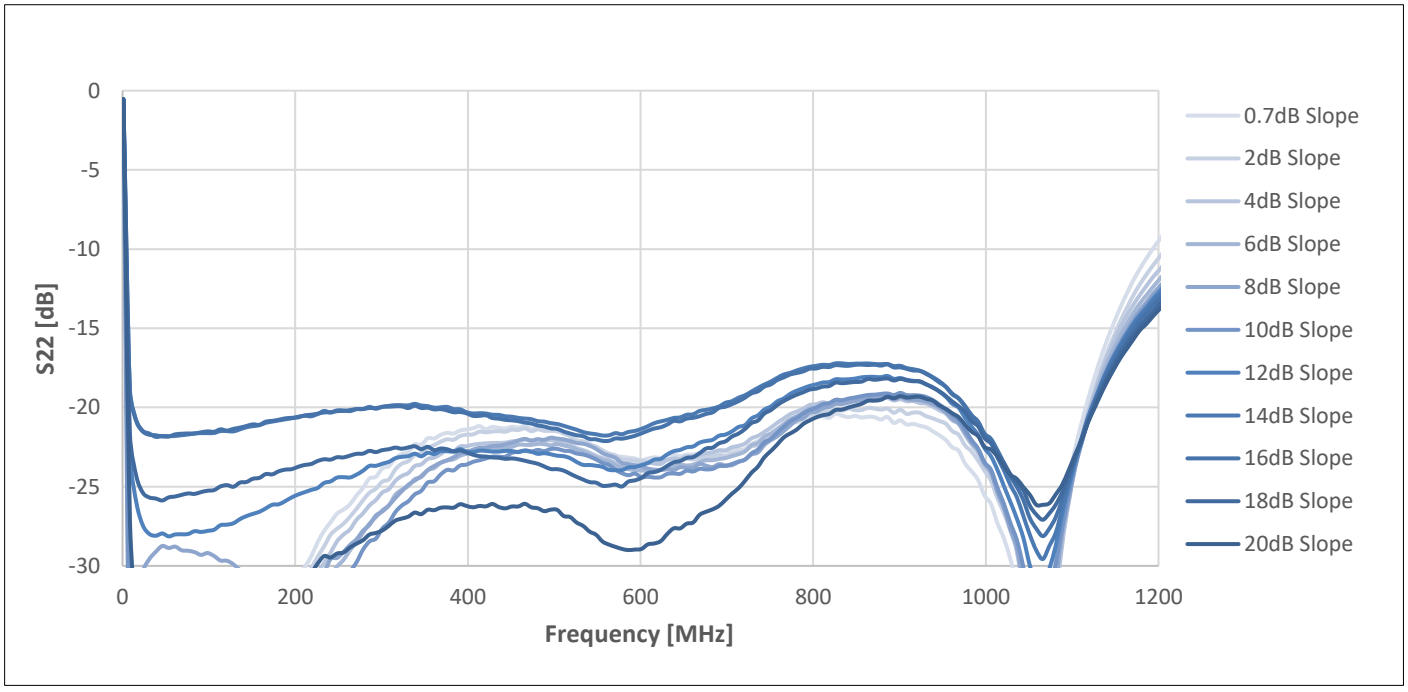

QPC7335 Slope vs. Vc, typical

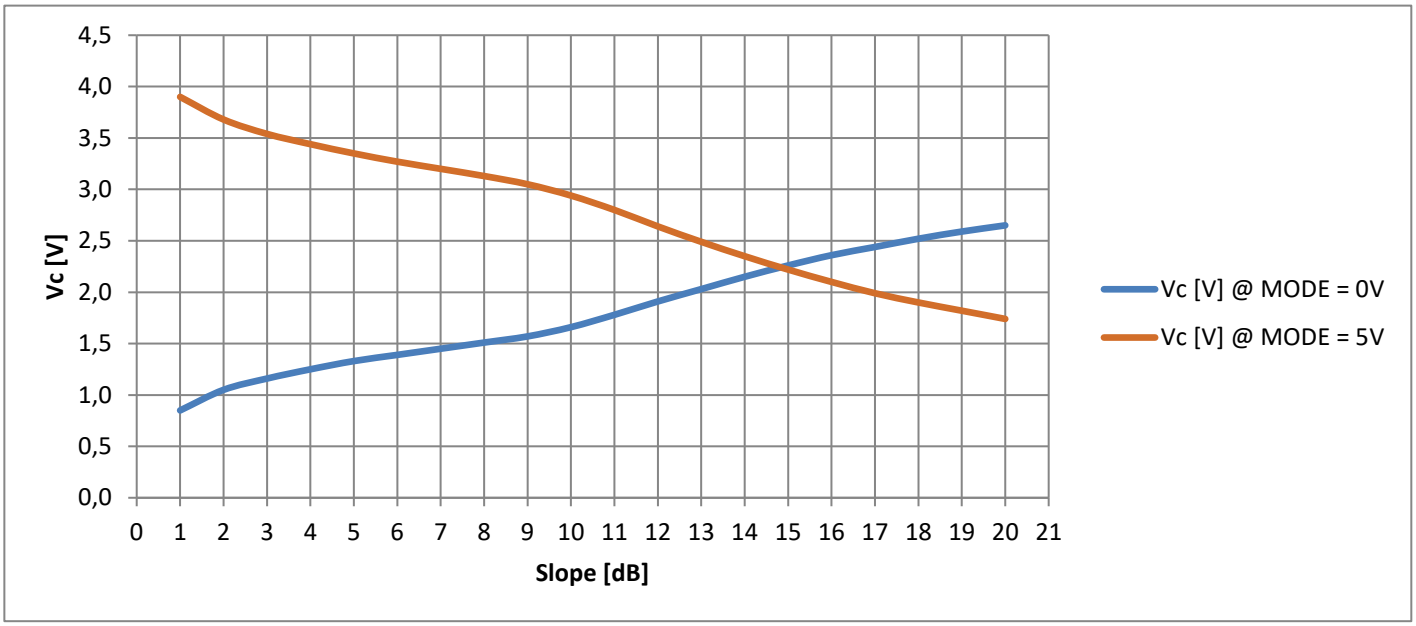

QPC7335 Slope vs. Vc2, typical

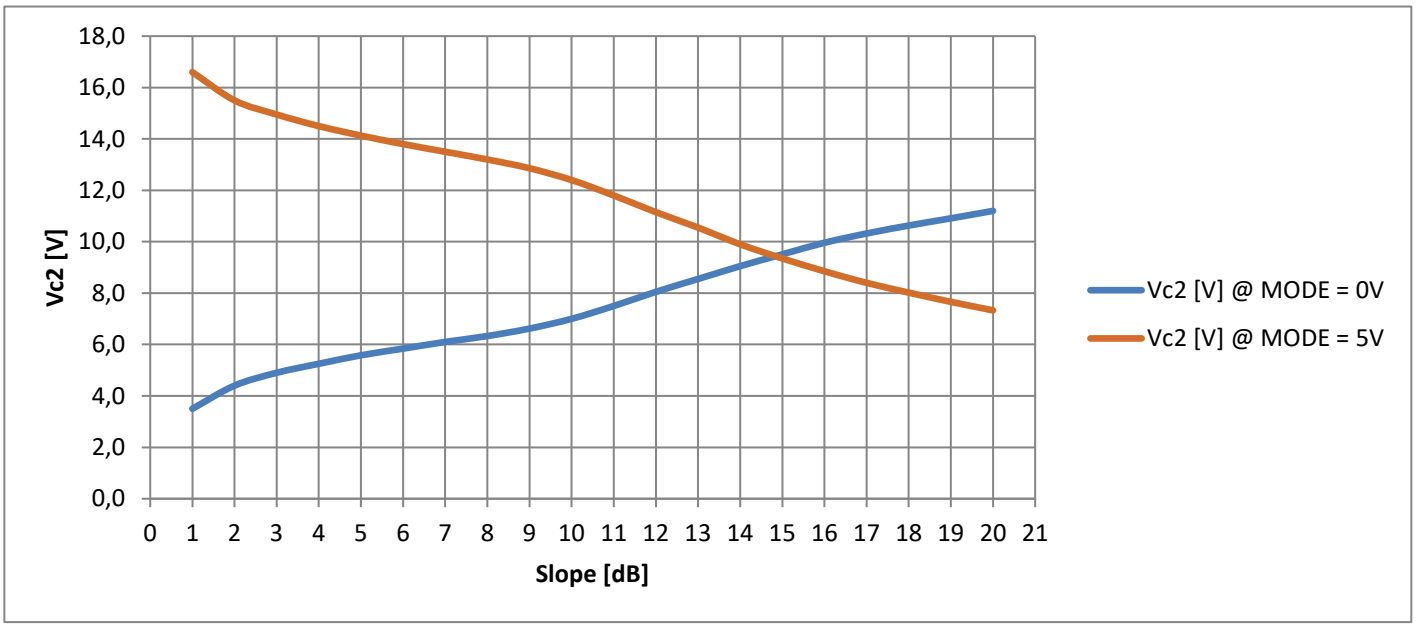

QPC7335 Slope vs. Temperature, typical

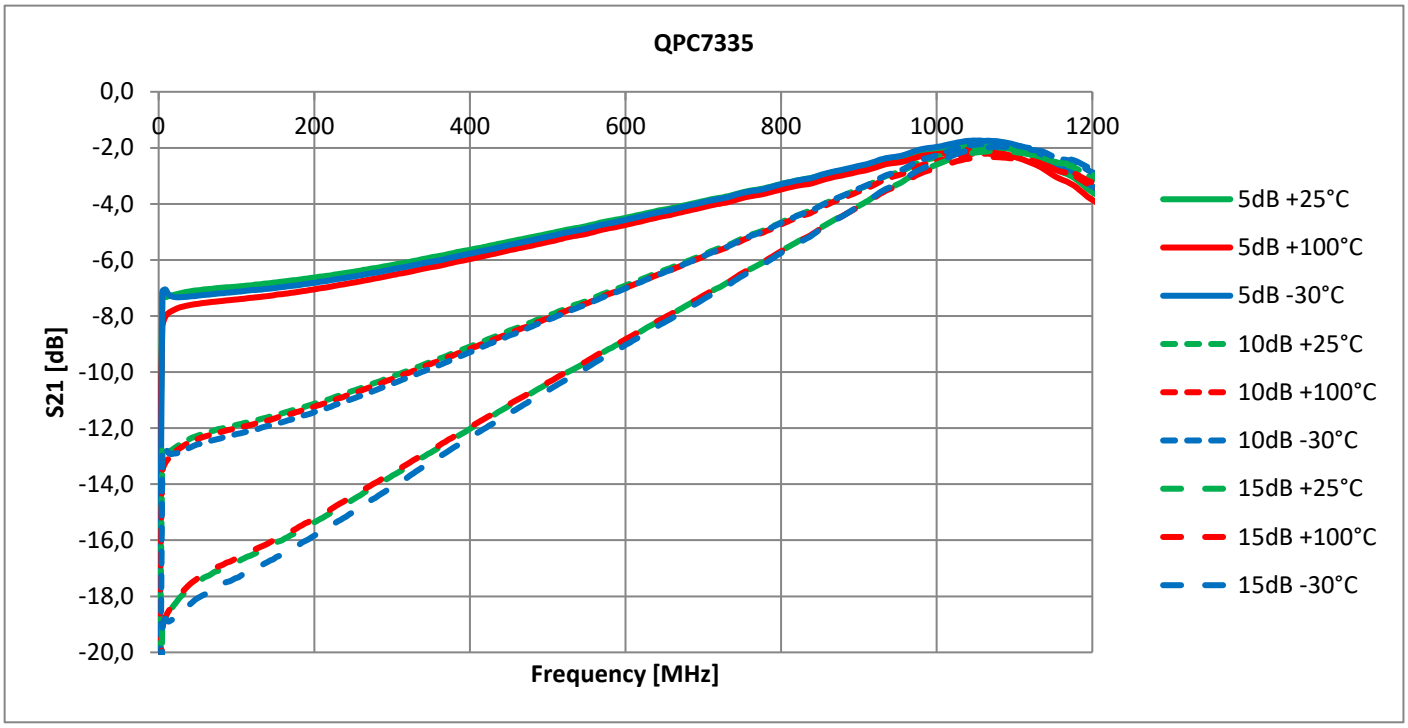

QPC7335 Input IP3 vs. Temperature, typical

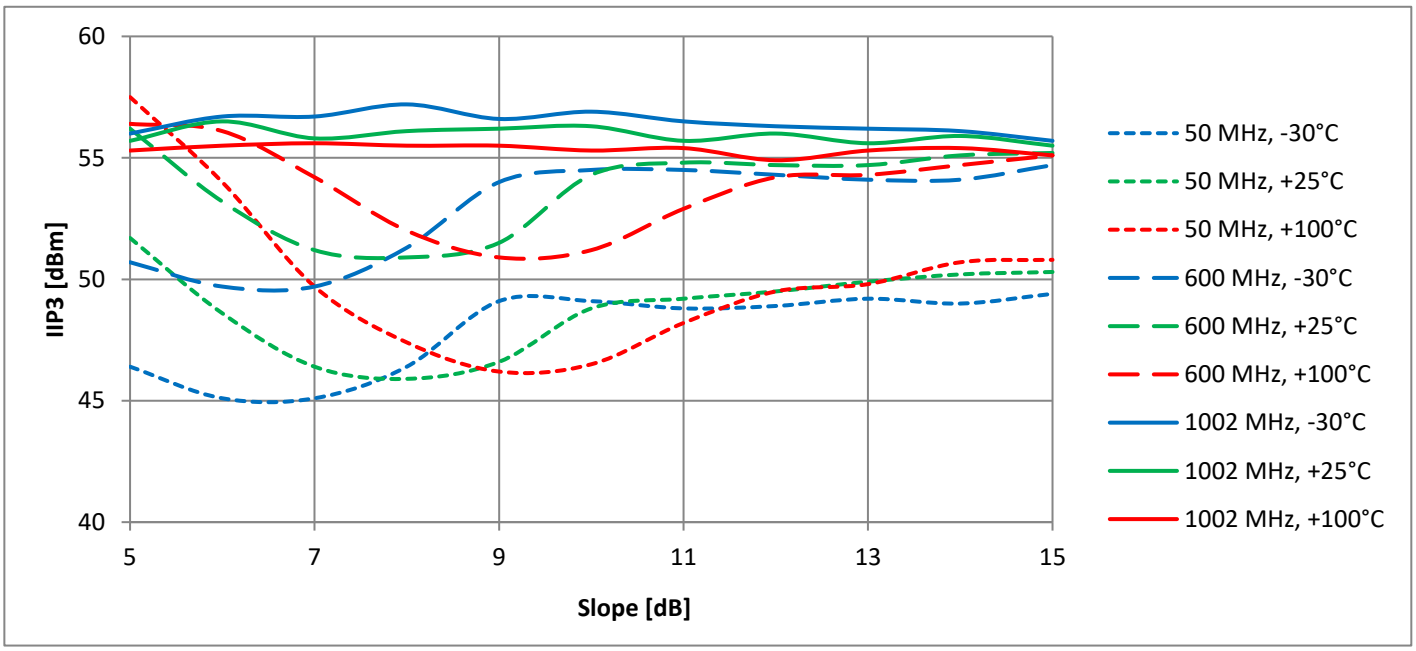

Evaluation Board Assembly Drawing

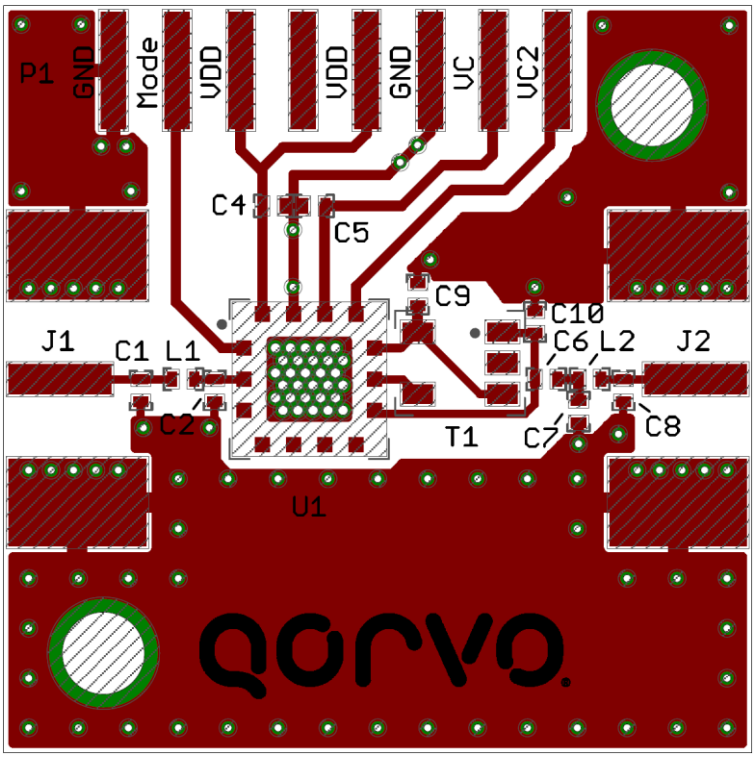

Evaluation board PCB: FR4, double sided, 1.5mm, 35um Cu
Vias are required under the backside paddle of this device for proper RF/DC grounding and thermal dissipation. A via drill diameter of 0.4mm and a minimum via wall copper plating thickness of 25um is recommended. Open vias are preferred to allow flux and gases to escape during reflow soldering and therefore to minimize voiding. Ensure good package backside paddle solder attach for reliable operation and best electrical performance. In any case the module backside temperature should not exceed 110 °C.

Evaluation Board Schematic

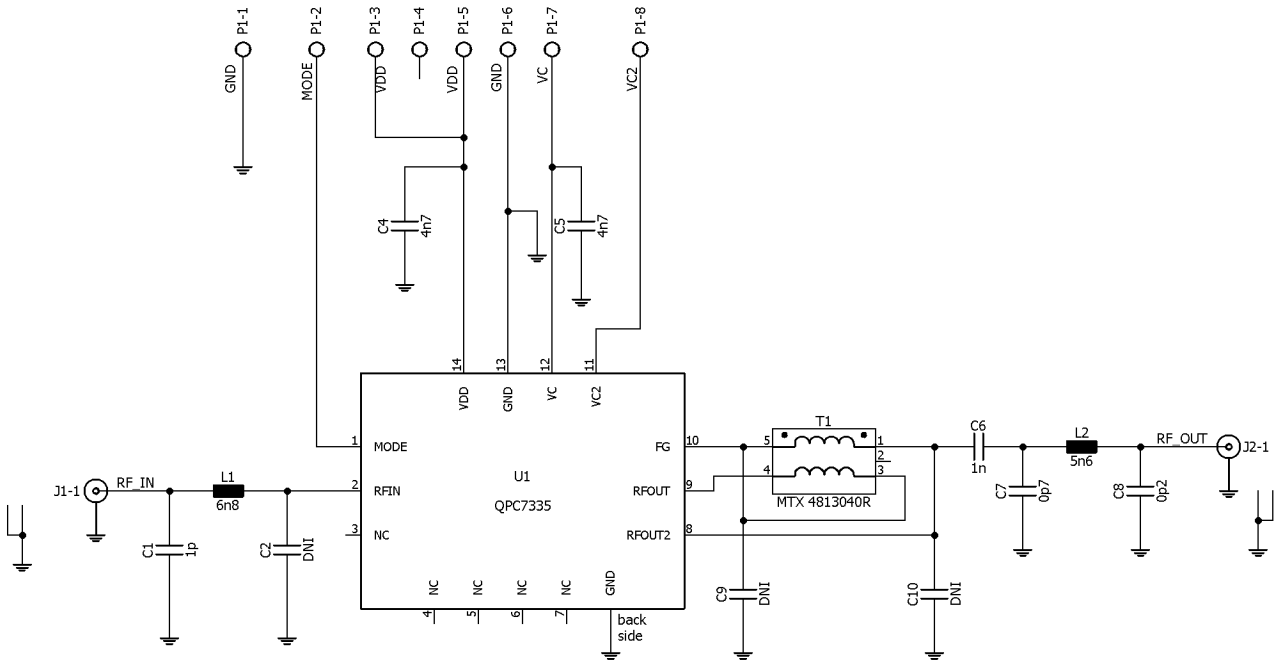

Evaluation Board Bill of Materials (BOM)

Ref. Designator	Value, package	Description	Manufacturer	Part Number
C1	1pF, C0G, 0402	Chip capacitor	MURATA, TAIYO YUDEN	
C2, C9, C10	DNI			
C4, C5	4.7nF, X7R, 0402	Chip capacitor	MURATA, TAIYO YUDEN	
C6	1nF, X7R, 0402	Chip capacitor	MURATA, TAIYO YUDEN	
C7	0.7pF, C0G, 0402	Chip capacitor	MURATA, TAIYO YUDEN	
C8	0.2pF, C0G, 0402	Chip capacitor	MURATA, TAIYO YUDEN	
L1	6.8nH, 0402	Chip inductor	TAIYO YUDEN	HK 1005 5N6S
L2	5.6nH, 0402	Chip inductor	TAIYO YUDEN	HK 1005 6N8J
T1		Transformer	Minntronix	4813040R
J1, J2		Connector F-type, female	Amphenol	222181
P1		Connector, 2.54mm pin spacing, optional	various	
U1		Variable equalizer	QORVO	QPC7335

Notes: C1, L1, C2, C7, L2 and C8 may be modified in target application circuit for S11 and S22 optimization
T1 alternative part: Mini RF MRFRX0032, S11 and S22 may show degradation

Pin Configuration

Top view

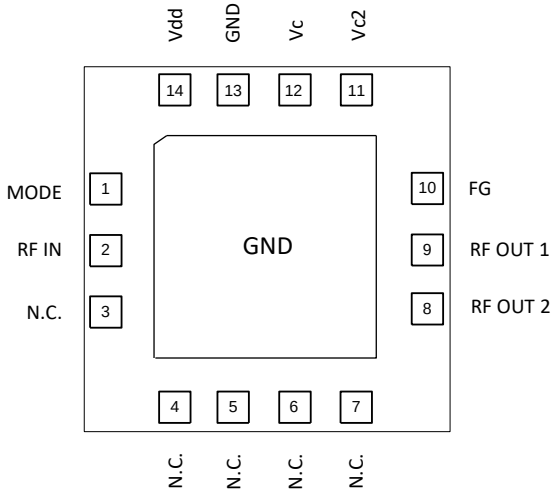

Pin Description

Pin No.	Label	Description
1	MODE	Slope control gradient (0V: positive slope control gradient or 5V: negative slope control gradient)
2	RF IN	RF input signal, AC coupled
8	RF OUT 2	Connection to balun and circuit output
9	RF OUT 1	Connection to balun
10	FG	Floating ground, connection to balun
11	Vc2	Control voltage 2
12	Vc	Control voltage
13, GND	GND	Ground
14	Vdd	+5V supply voltage
3, 4, 5, 6, 7	N.C.	Not connected

Notes: Either Pin11 or Pin12 can be used to set slope, internal 1:4 voltage divider between Pin11 and Pin12

Package Outline Drawing (Dimensions in millimeters)

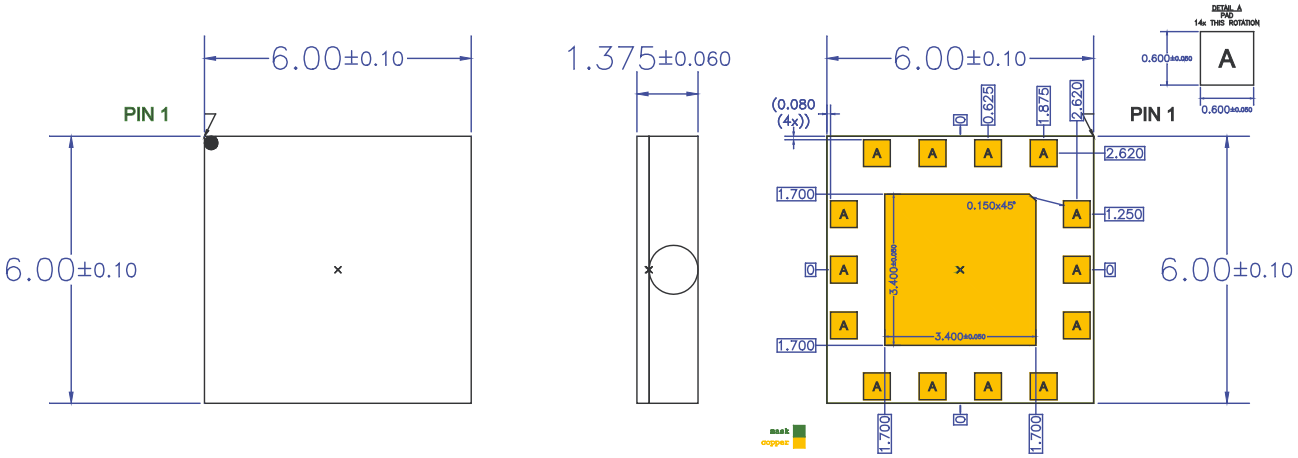

TOP VIEW SIDE VIEW BOTTOM VIEW

Notes:
1. Dimension and tolerance formats conform to ASME Y14.5M-1994.
2. The terminal #1 identifier and terminal numbering conform to JESD 95-1 SPP-012.
3. Co-planarity applies to the exposed ground/thermal pad as well as the contact pins.
4. Package body length/width does not include plastic flash protrusion across mold parting line.

PCB Metal Land Pattern (Dimensions in millimeters)

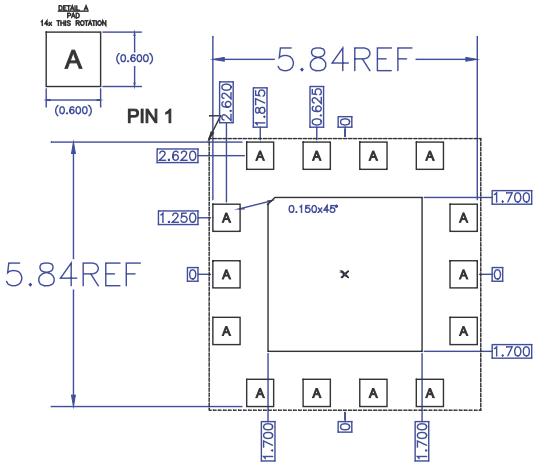

RECOMMENDED
LAND PATTERN

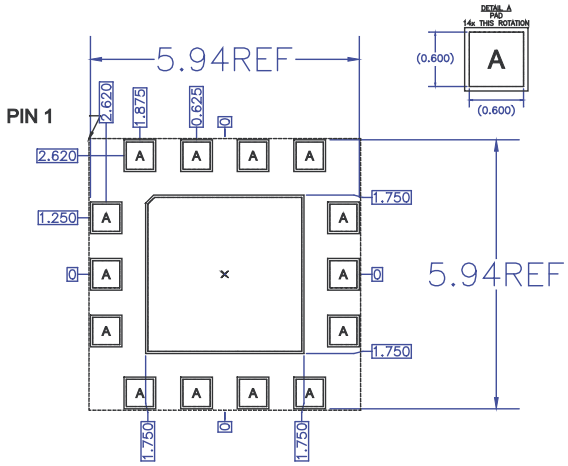

RECOMMENDED
LAND PATTERN MASK

Notes:
1. All dimensions are in millimeters. Angles are in degrees.

Handling Precautions

Parameter	Rating	Standard
ESD – Human Body Model (HBM)	1C	ANSI/ESD/JEDEC JS-001-2012
ESD – Charged Device Model (CDM)	C3	JEDEC JESD22-C101F
MSL – Moisture Sensitivity Level	Level 3	IPC/JEDEC J-STD-020



Caution!
ESD-Sensitive Device

Solderability

Compatible with both lead-free (260°C max. reflow temp.) and tin/lead (245°C max. reflow temp.) soldering processes.
Solder profiles available upon request.

Contact plating: ENEPIG (NiPdAu)

RoHS Compliance

This part is compliant with 2011/65/EU RoHS directive (Restrictions on the Use of Certain Hazardous Substances in Electrical and Electronic Equipment) as amended by Directive 2015/863/EU.

This product also has the following attributes:

- Halogen Free (Chlorine, Bromine)
- Antimony Free
- TBBP-A ($C_{15}H_{12}Br_4O_2$) Free
- PFOS Free
- SVHC Free

Contact Information

For the latest specifications, additional product information, worldwide sales and distribution locations:

Web: www.qorvo.com

Tel: 1-844-890-8163

Email: customer.support@qorvo.com

Important Notice

The information contained herein is believed to be reliable; however, Qorvo makes no warranties regarding the information contained herein and assumes no responsibility or liability whatsoever for the use of the information contained herein. All information contained herein is subject to change without notice. Customers should obtain and verify the latest relevant information before placing orders for Qorvo products. The information contained herein or any use of such information does not grant, explicitly or implicitly, to any party any patent rights, licenses, or any other intellectual property rights, whether with regard to such information itself or anything described by such information. **THIS INFORMATION DOES NOT CONSTITUTE A WARRANTY WITH RESPECT TO THE PRODUCTS DESCRIBED HEREIN, AND QORVO HEREBY DISCLAIMS ANY AND ALL WARRANTIES WITH RESPECT TO SUCH PRODUCTS WHETHER EXPRESS OR IMPLIED BY LAW, COURSE OF DEALING, COURSE OF PERFORMANCE, USAGE OF TRADE OR OTHERWISE, INCLUDING THE IMPLIED WARRANTIES OF MERCHANTABILITY AND FITNESS FOR A PARTICULAR PURPOSE.**

Without limiting the generality of the foregoing, Qorvo products are not warranted or authorized for use as critical components in medical, life-saving, or life-sustaining applications, or other applications where a failure would reasonably be expected to cause severe personal injury or death.

Copyright 2019 © Qorvo, Inc. | Qorvo is a registered trademark of Qorvo, Inc.

Looking for pricing, stock, or lifecycle information?

Click below to explore more details on WIN SOURCE:

- View QPC7335SR on WIN SOURCE
- Qorvo US Inc. Information

Optimize Your Supply Chain with WIN SOURCE Solutions

- Global Sourcing Solution
- Obsolete Management
- Cost Control Management
- Shortage Management
- Alternative Solution
- Excess Inventory Management