THE DATASHEET OF

CS5207-2GT3

CS5207-2

7.0 A, 1.5 V Fixed Linear Regulator

The CS5207−2 provides 7.0 A at 1.5 V with an accuracy of ±2.0 %.

The regulator is intended for use as an active termination for the GTL bus on Intel based motherboards. The fast loop response and low dropout voltage make these regulators ideal for applications where low voltage operation and good transient response are important.

The circuit is designed to operate with dropout voltages as low as 1.0 V depending on the output current level. The maximum quiescent current is only 10 mA at full load.

The regulators are fully protected against overload conditions with protection circuitry for Safe Operating Area (SOA), overcurrent and thermal shutdown.

The CS5207−2 is available in TO−220 packages.

Features

- Output Current to 7.0 A
- Output Voltage Trimmed to ±2.0%
- Dropout Voltage 1.45 V @ 7.0 A
- Fast Transient Response
- Fault Protection Circuitry
  - Thermal Shutdown
  - Overcurrent Protection
  - Safe Area Protection

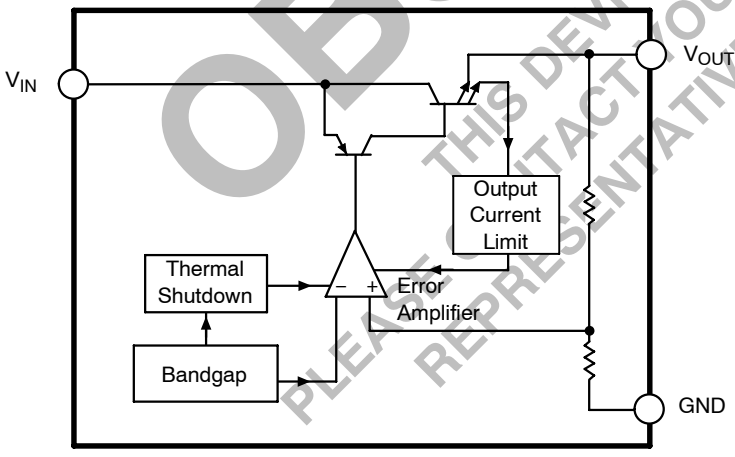

Figure 1. Block Diagram

OBSOLETE
THIS DEVICE IS OBSOLETE
PLEASE CONTACT YOUR ON SEMICONDUCTOR
REPRESENTATIVE FOR INFORMATION

ON Semiconductor®

http://onsemi.com

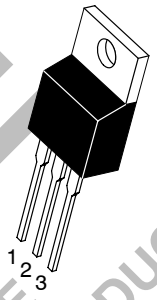

TO−220
THREE LEAD
T SUFFIX
CASE 221A

PIN CONNECTIONS AND MARKING DIAGRAMS



Tab = V_{OUT}
Pin 1. GND
2. V_{OUT}
3. V_{IN}

A = Assembly Location
WL, L = Wafer Lot
YY, Y = Year
WW, W = Work Week

ORDERING INFORMATION*

Device	Package	Shipping
CS5207−2GT3	TO−220†	50 Units/Rail

*Additional ordering information can be found on page 5 of this data sheet.
† TO−220 is 3−pin, straight leaded.

© Semiconductor Components Industries, LLC, 2006

MAXIMUM RATINGS*

Parameter		Value	Unit
Supply Voltage, V_{CC}		17	V
Operating Temperature Range		−40 to +70	°C
Junction Temperature		150	°C
Storage Temperature Range		−60 to +150	°C
Lead Temperature Soldering:	Wave Solder (through hole styles only) Note 1	260 Peak	°C
ESD Damage Threshold		2.0	kV

1. 10 second maximum.

*The maximum package power dissipation must be observed.

ELECTRICAL CHARACTERISTICS (C_{IN} = 10 μF, C_{OUT} = 22 μF Tantalum, $V_{IN} - V_{OUT}$ = 3.0 V, $V_{IN} \le$ 10 V, 0°C ≤ $T_A \le$ 70°C, $T_J \le$ +150°C, unless otherwise specified, $I_{full\ load}$ = 7.0 A)

Characteristic	Test Conditions	Min	Typ	Max	Unit
Fixed Output Voltage					
Output Voltage (Notes 2 and 3)	$V_{IN} - V_{OUT}$ = 1.65 V; 0 ≤ $I_{OUT} \le$ 7.0 A	1.47 (−2.0%)	1.50	1.53 (+2.0%)	V
Line Regulation	1.65 V ≤ $V_{IN} - V_{OUT} \le$ 6.0 V; I_{OUT} = 10 mA	–	0.04	0.20	%
Load Regulation (Notes 2 and 3)	$V_{IN} - V_{OUT}$ = 1.65 V; 10 mA ≤ $I_{OUT} \le$ 7.0 A	–	0.08	0.40	%
Dropout Voltage (Note 4)	I_{OUT} = 7.0 A	–	1.42	1.65	V
Current Limit	$V_{IN} - V_{OUT}$ = 3.0 V; $T_J \ge$ 25°C $V_{IN} - V_{OUT}$ = 12 V	7.1 –	8.5 1.0	– –	A A
Quiescent Current	$V_{IN} \le$ 9.0 V; I_{OUT} = 10 mA	–	5.0	10	mA
Thermal Regulation	30 ms Pulse, T_A = 25°C	–	0.003	–	%/W
Ripple Rejection	f = 120 Hz; I_{OUT} = 7.0 A	–	80	–	dB
Temperature Stability	–	–	0.5	–	%
RMS Output Noise (%V_{OUT})	10 Hz ≤ f ≤ 10 kHz	–	0.003	–	%/V_{OUT}
Thermal Shutdown	–	150	180	–	°C
Thermal Shutdown Hysteresis	–	–	25	–	°C

2. Load regulation and output voltage are measured at a constant junction temperature by low duty cycle pulse testing. Changes in output voltage due to thermal gradients or temperature changes must be taken into account seperately.
3. Specifications apply for an external Kelvin sense connection at a point on the output pin 1/4” from the bottom of the package.
4. Dropout voltage is a measurement of the minimum input/output differential at full load.

OBSOLETE
THIS DEVICE IS OBSOLETE
PLEASE CONTACT YOUR ON SEMICONDUCTOR
REPRESENTATIVE FOR INFORMATION

PACKAGE PIN DESCRIPTION

Package Pin Number		
TO−220	Pin Symbol	Function
1	GND	Ground connection.
2	V_{OUT}	Regulated output voltage (case).
3	V_{IN}	Input voltage.

TYPICAL PERFORMANCE CHARACTERISTICS

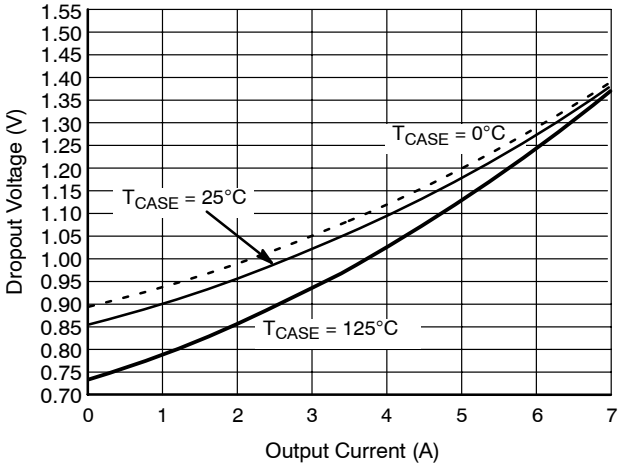

Figure 2. Dropout Voltage vs. Output Current

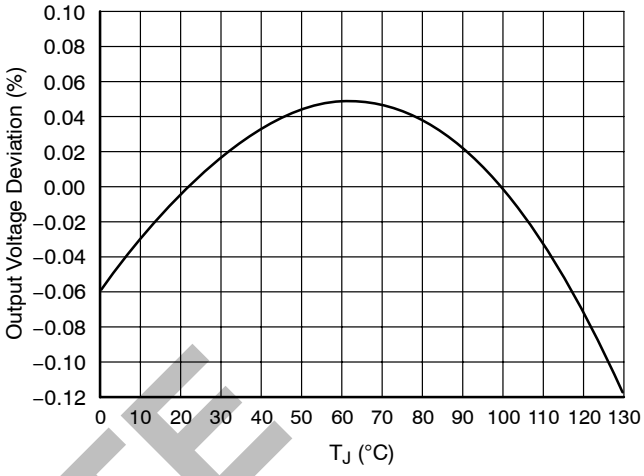

Figure 3. Output Voltage vs. Temperature

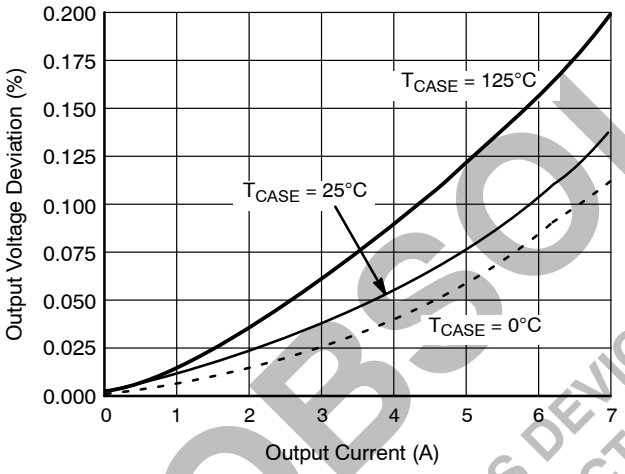

Figure 4. Load Regulation vs. Output Current

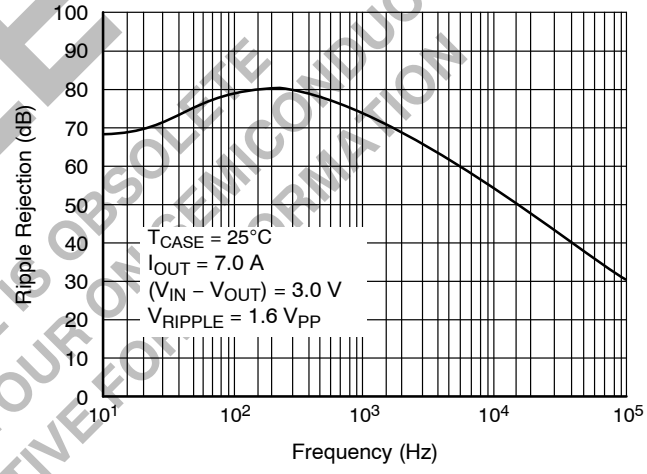

Figure 5. Ripple Rejection vs. Frequency

OBSOLETE
THIS DEVICE IS OBSOLETE
PLEASE CONTACT YOUR ON SEMICONDUCTOR
REPRESENTATIVE FOR FURTHER INFORMATION

APPLICATIONS INFORMATION

The CS5207−2 linear regulator provides a fixed 1.5 V output at currents up to 7.0 A. The regulator is protected against short circuit, and includes thermal shutdown and safe area protection (SOA) circuitry. The SOA protection circuitry decreases the maximum available output current as the input−output differential voltage increase.

The CS5207−2 has a composite PNP−NPN output transistor and requires an output capacitor for stability. A detailed procedure for selecting this capacitor is included in the Stability Considerations section.

Stability Considerations

The output or compensation capacitor helps determine three main characteristics of a linear regulator: start−up delay, load transient response, and loop stability.

The capacitor value and type is based on cost, availability, size and temperature constraints. A tantalum or aluminum electrolytic capacitor is best, since a film or ceramic capacitor with almost zero ESR can cause instability. The aluminum electrolytic capacitor is the least expensive solution. However, when the circuit operates at low temperatures, both the value and ESR of the capacitor will vary considerably. The capacitor manufacturer's data sheet provides this information.

A 22 μF tantalum capacitor will work for most applications, but with high current regulators such as the CS5207−2 the transient response and stability improve with higher values of capacitance. The majority of applications for this regulator involve large changes in load current so the output capacitor must supply the instantaneous load current. The ESR of the output capacitor causes an immediate drop in output voltage given by:

$$\Delta V = \Delta I \times ESR$$

For microprocessor applications it is customary to use an output capacitor network consisting of several tantalum and ceramic capacitors in parallel. This reduces the overall ESR and reduces the instantaneous output voltage drop under transient load conditions. The output capacitor network should be as close to the load as possible for the best results.

Protection Diodes

When large external capacitors are used with a linear regulator it is sometimes necessary to add protection diodes. If the input voltage of the regulator gets shorted, the output capacitor will discharge into the output of the regulator. The discharge current depends on the value of the capacitor, the output voltage and the rate at which V_{IN} drops. In the CS5207−2 linear regulator, the discharge path is through a large junction and protection diodes are not usually needed. If the regulator is used with large values of output capacitance and the input voltage is instantaneously shorted to ground, damage can occur. In this case, a diode connected as shown in Figure 6 is recommended.

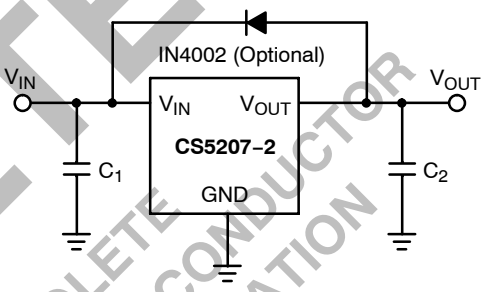

Figure 6. Protection Diode Scheme for Fixed Output Regulators

Output Voltage Sensing

Since the CS5207−2 is a three terminal regulator, it is not possible to provide true remote load sensing. Load regulation is limited by the resistance of the conductors connecting the regulator to the load. For best results the regulator should be connected as shown in Figure 7.

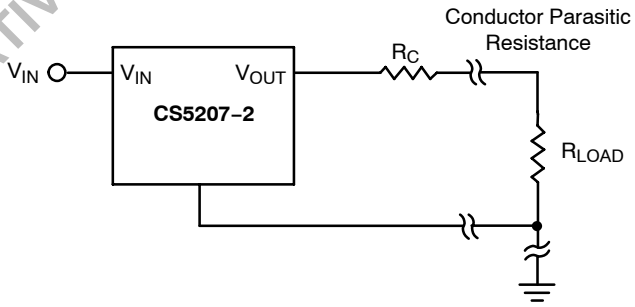

Figure 7. Conductor Parasitic Resistance Effects Can Be Minimized With the Above Grounding Scheme for Fixed Output Regulators

OBSOLETE
THIS DEVICE IS OBSOLETE
PLEASE CONTACT YOUR ONSEMICONDUCTOR
REPRESENTATIVE FOR INFORMATION

Calculating Power Dissipation and Heat Sink Requirements

The CS5207−2 includes thermal shutdown and safe operating area circuitry to protect the device. High power regulators such as these usually operate at high junction temperatures so it is important to calculate the power dissipation and junction temperatures accurately to ensure that an adequate heat sink is used.

The case is connected to V_{OUT} on the CS5207−2, electrical isolation may be required for some applications. Thermal compound should always be used with high current regulators such as these.

The thermal characteristics of an IC depend on the following four factors:

1. Maximum Ambient Temperature T_A (°C)
2. Power dissipation P_D (Watts)
3. Maximum junction temperature T_J (°C)
4. Thermal resistance junction to ambient $R_{\Theta JA}$ (°C/W)

These four are related by the equation

$$T_J = T_A + P_D \times R_{\Theta JA} \quad (1)$$

The maximum ambient temperature and the power dissipation are determined by the design while the maximum junction temperature and the thermal resistance depend on the manufacturer and the package type.

The maximum power dissipation for a regulator is:

$$P_{D(max)} = \{V_{IN(max)} - V_{OUT(min)}\}I_{OUT(max)} + V_{IN(max)}I_Q \quad (2)$$

where:

$V_{IN(max)}$ is the maximum input voltage,

$V_{OUT(min)}$ is the minimum output voltage,

$I_{OUT(max)}$ is the maximum output current, for the application

I_Q is the maximum quiescent current at $I_{OUT(max)}$.

A heat sink effectively increases the surface area of the package to improve the flow of heat away from the IC and into the surrounding air.

Each material in the heat flow path between the IC and the outside environment has a thermal resistance. Like series electrical resistances, these resistances are summed to determine $R_{\Theta JA}$, the total thermal resistance between the junction and the surrounding air.

1. Thermal Resistance of the junction to case, $R_{\Theta JC}$ (°C/W)
2. Thermal Resistance of the case to Heat Sink, $R_{\Theta CS}$ (°C/W)
3. Thermal Resistance of the Heat Sink to the ambient air, $R_{\Theta SA}$ (°C/W)

These are connected by the equation:

$$R_{\Theta JA} = R_{\Theta JC} + R_{\Theta CS} + R_{\Theta SA} \quad (3)$$

The value for $R_{\Theta JA}$ is calculated using equation (3) and the result can be substituted in equation (1).

$R_{\Theta JC}$ is 1.6°C/Watt for the CS5207−2. For a high current regulator such as the CS5207−2 the majority of the heat is generated in the power transistor section. The value for $R_{\Theta SA}$ depends on the heat sink type, while $R_{\Theta CS}$ depends on factors such as package type, heat sink interface (is an insulator and thermal grease used?), and the contact area between the heat sink and the package. Once these calculations are complete, the maximum permissible value of $R_{\Theta JA}$ can be calculated and the proper heat sink selected. For further discussion on heat sink selection, see application note "Thermal Management," document number AND8036/D, available through the Literature Distribution Center or via our website at http://onsemi.com.

OBSOLETE
THIS DEVICE IS OBSOLETE
PLEASE CONTACT YOUR ON SEMICONDUCTOR
REPRESENTATIVE FOR INFORMATION

ADDITIONAL ORDERING INFORMATION

Orderable Part Number	Type	Description
CS5207−2GT3	7.0 A, 1.5 V Output	TO−220 THREE LEAD, STRAIGHT

PACKAGE DIMENSIONS

TO−220
THREE LEAD
T SUFFIX
CASE 221A−08
ISSUE AA

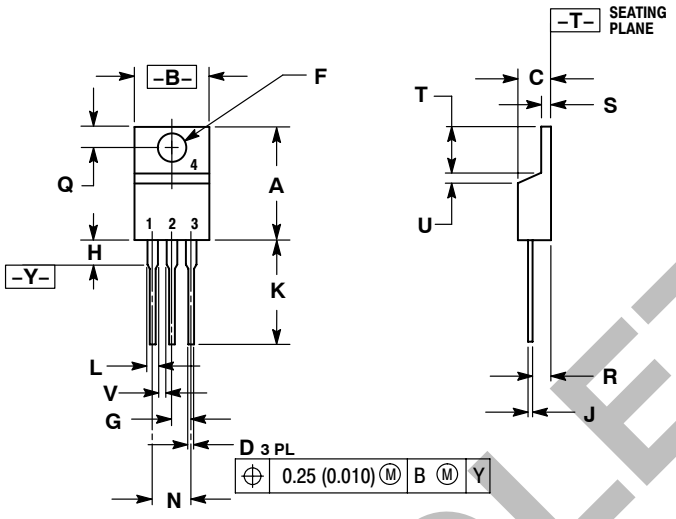

NOTES:
1. DIMENSIONING AND TOLERANCING PER ANSI Y14.5M, 1982.
2. CONTROLLING DIMENSION: INCH.

	INCHES		MILLIMETERS	
DIM	MIN	MAX	MIN	MAX
A	0.560	0.625	14.23	15.87
B	0.380	0.420	9.66	10.66
C	0.140	0.190	3.56	4.82
D	0.025	0.035	0.64	0.89
F	0.139	0.155	3.53	3.93
G	0.100 BSC		2.54 BSC	
H	---	0.280	---	7.11
J	0.012	0.045	0.31	1.14
K	0.500	0.580	12.70	14.73
L	0.045	0.060	1.15	1.52
N	0.200 BSC		5.08 BSC	
Q	0.100	0.135	2.54	3.42
R	0.080	0.115	2.04	2.92
S	0.020	0.055	0.51	1.39
T	0.235	0.255	5.97	6.47
U	0.000	0.050	0.00	1.27
V	0.045	---	1.15	---

PACKAGE THERMAL DATA

Parameter		TO−220 THREE LEAD	Unit
$R_{\Theta JC}$	Typical	1.6	°C/W
$R_{\Theta JA}$	Typical	50	°C/W

OBSOLETE
THIS DEVICE IS OBSOLETE
PLEASE CONTACT YOUR ON SEMICONDUCTOR
REPRESENTATIVE FOR INFORMATION

ON Semiconductor and ON are registered trademarks of Semiconductor Components Industries, LLC (SCILLC). SCILLC reserves the right to make changes without further notice to any products herein. SCILLC makes no warranty, representation or guarantee regarding the suitability of its products for any particular purpose, nor does SCILLC assume any liability arising out of the application or use of any product or circuit, and specifically disclaims any and all liability, including without limitation special, consequential or incidental damages. "Typical" parameters which may be provided in SCILLC data sheets and/or specifications can and do vary in different applications and actual performance may vary over time. All operating parameters, including "Typicals" must be validated for each customer application by customer's technical experts. SCILLC does not convey any license under its patent rights nor the rights of others. SCILLC products are not designed, intended, or authorized for use as components in systems intended for surgical implant into the body, or other applications intended to support or sustain life, or for any other application in which the failure of the SCILLC product could create a situation where personal injury or death may occur. Should Buyer purchase or use SCILLC products for any such unintended or unauthorized application, Buyer shall indemnify and hold SCILLC and its officers, employees, subsidiaries, affiliates, and distributors harmless against all claims, costs, damages, and expenses, and reasonable attorney fees arising out of, directly or indirectly, any claim of personal injury or death associated with such unintended or unauthorized use, even if such claim alleges that SCILLC was negligent regarding the design or manufacture of the part. SCILLC is an Equal Opportunity/Affirmative Action Employer. This literature is subject to all applicable copyright laws and is not for resale in any manner.

PUBLICATION ORDERING INFORMATION

LITERATURE FULFILLMENT:
Literature Distribution Center for ON Semiconductor
P.O. Box 5163, Denver, Colorado 80217 USA
Phone: 303−675−2175 or 800−344−3860 Toll Free USA/Canada
Fax: 303−675−2176 or 800−344−3867 Toll Free USA/Canada
Email: orderlit@onsemi.com

N. American Technical Support: 800−282−9855 Toll Free USA/Canada
Europe, Middle East and Africa Technical Support:
Phone: 421 33 790 2910
Japan Customer Focus Center
Phone: 81−3−5773−3850

ON Semiconductor Website: **www.onsemi.com**

Order Literature: http://www.onsemi.com/orderlit

For additional information, please contact your local Sales Representative

Looking for pricing, stock, or lifecycle information?

Click below to explore more details on WIN SOURCE:

- View CS5207-2GT3 on WIN SOURCE
- ON Semiconductor Information

Optimize Your Supply Chain with WIN SOURCE Solutions

- Global Sourcing Solution
- Obsolete Management
- Cost Control Management
- Shortage Management
- Alternative Solution
- Excess Inventory Management