THE DATASHEET OF

1SMB28AT3

1SMB5.0AT3G Series, SZ1SMB5.0AT3G Series

600 Watt Peak Power Zener Transient Voltage Suppressors

Unidirectional

The SMB series is designed to protect voltage sensitive components from high voltage, high energy transients. They have excellent clamping capability, high surge capability, low zener impedance and fast response time. The SMB series is supplied in ON Semiconductor's exclusive, cost-effective, highly reliable SURMETIC® package and is ideally suited for use in communication systems, automotive, numerical controls, process controls, medical equipment, business machines, power supplies and many other industrial/consumer applications.

Features

- Working Peak Reverse Voltage Range – 5.0 V to 170 V
- Standard Zener Breakdown Voltage Range – 6.7 V to 199 V
- Peak Power – 600 W @ 1.0 ms
- ESD Rating of Class 3 (> 16 kV) per Human Body Model
- Maximum Clamp Voltage @ Peak Pulse Current
- Low Leakage < 5.0 μA Above 10 V
- UL 497B for Isolated Loop Circuit Protection
- Response Time is Typically < 1.0 ns
- SZ Prefix for Automotive and Other Applications Requiring Unique Site and Control Change Requirements; AEC−Q101 Qualified and PPAP Capable
- Pb−Free Packages are Available*

Mechanical Characteristics

CASE: Void-free, transfer-molded, thermosetting plastic
FINISH: All external surfaces are corrosion resistant and leads are readily solderable
MAXIMUM CASE TEMPERATURE FOR SOLDERING PURPOSES: 260°C for 10 Seconds
LEADS: Modified L−Bend providing more contact area to bond pads
POLARITY: Cathode indicated by polarity band
MOUNTING POSITION: Any

*For additional information on our Pb−Free strategy and soldering details, please download the ON Semiconductor Soldering and Mounting Techniques Reference Manual, SOLDERRM/D.

ON Semiconductor®

http://onsemi.com

PLASTIC SURFACE MOUNT ZENER OVERVOLTAGE TRANSIENT SUPPRESSORS 5.0 V – 170 V, 600 W PEAK POWER



SMB
CASE 403A
PLASTIC



MARKING DIAGRAM

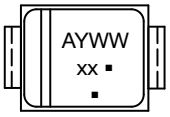

A = Assembly Location
Y = Year
WW = Work Week
xx = Device Code (Refer to page 3)
▪ = Pb−Free Package

(Note: Microdot may be in either location)

ORDERING INFORMATION

Device	Package	Shipping†
1SMBxxxAT3G	SMB (Pb−Free)	2,500 / Tape & Reel
SZ1SMBxxxAT3G	SMB (Pb−Free)	2,500 / Tape & Reel

†For information on tape and reel specifications, including part orientation and tape sizes, please refer to our Tape and Reel Packaging Specifications Brochure, BRD8011/D.

DEVICE MARKING INFORMATION

See specific marking information in the device marking column of the Electrical Characteristics table on page 3 of this data sheet.

© Semiconductor Components Industries, LLC, 2012

MAXIMUM RATINGS

Rating	Symbol	Value	Unit
Peak Power Dissipation (Note 1) @ T_L = 25°C, Pulse Width = 1 ms	P_{PK}	600	W
DC Power Dissipation @ T_L = 75°C Measured Zero Lead Length (Note 2) Derate Above 75°C Thermal Resistance from Junction−to−Lead	P_D $R_{\theta JL}$	3.0 40 25	W mW/°C °C/W
DC Power Dissipation (Note 3) @ T_A = 25°C Derate Above 25°C Thermal Resistance from Junction−to−Ambient	P_D $R_{\theta JA}$	0.55 4.4 226	W mW/°C °C/W
Forward Surge Current (Note 4) @ T_A = 25°C	I_{FSM}	100	A
Operating and Storage Temperature Range	T_J, T_{stg}	−65 to +150	°C

Stresses exceeding Maximum Ratings may damage the device. Maximum Ratings are stress ratings only. Functional operation above the Recommended Operating Conditions is not implied. Extended exposure to stresses above the Recommended Operating Conditions may affect device reliability.

1. 10 X 1000 μs, non−repetitive.
2. 1 in square copper pad, FR−4 board.
3. FR−4 board, using ON Semiconductor minimum recommended footprint, as shown in 403A case outline dimensions spec.
4. 1/2 sine wave (or equivalent square wave), PW = 8.3 ms, duty cycle = 4 pulses per minute maximum.

ELECTRICAL CHARACTERISTICS (T_A = 25°C unless otherwise noted, V_F = 3.5 V Max. @ I_F (Note 5) = 30 A)

Symbol	Parameter
I_{PP}	Maximum Reverse Peak Pulse Current
V_C	Clamping Voltage @ I_{PP}
V_{RWM}	Working Peak Reverse Voltage
I_R	Maximum Reverse Leakage Current @ V_{RWM}
V_{BR}	Breakdown Voltage @ I_T
I_T	Test Current
I_F	Forward Current
V_F	Forward Voltage @ I_F

5. 1/2 sine wave (or equivalent square wave), PW = 8.3 ms, non−repetitive duty cycle.

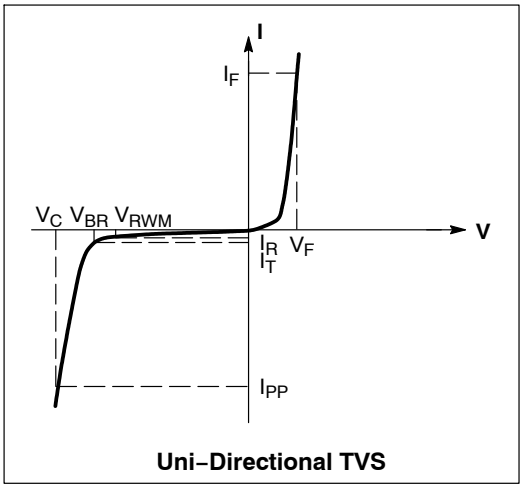

Uni−Directional TVS

ELECTRICAL CHARACTERISTICS

Device*	Device Marking	V_{RWM} (Note 6)	I_R @ V_{RWM}	Breakdown Voltage				V_C @ I_{PP} (Note 8)		C_{typ} (Note 9)
				V_{BR} (Note 7) Volts			@ I_T	V_C	I_{PP}	
		V	μA	Min	Nom	Max	mA	V	A	pF
1SMB5.0AT3G	KE	5.0	800	6.40	6.7	7.0	10	9.2	65.2	2700
1SMB6.0AT3G	KG	6.0	800	6.67	7.02	7.37	10	10.3	58.3	2300
1SMB6.5AT3G	KK	6.5	500	7.22	7.6	7.98	10	11.2	53.6	2140
1SMB7.0AT3G	KM	7.0	500	7.78	8.19	8.6	10	12.0	50.0	2005
1SMB7.5AT3G	KP	7.5	100	8.33	8.77	9.21	1.0	12.9	46.5	1890
1SMB8.0AT3G	KR	8.0	50	8.89	9.36	9.83	1.0	13.6	44.1	1780
1SMB8.5AT3G	KT	8.5	10	9.44	9.92	10.4	1.0	14.4	41.7	1690
1SMB9.0AT3G	KV	9.0	5.0	10.0	10.55	11.1	1.0	15.4	39.0	1605
1SMB10AT3G	KX	10	5.0	11.1	11.7	12.3	1.0	17.0	35.3	1460
1SMB11AT3G	KZ	11	5.0	12.2	12.85	13.5	1.0	18.2	33.0	1345
1SMB12AT3G	LE	12	5.0	13.3	14	14.7	1.0	19.9	30.2	1245
1SMB13AT3G	LG	13	5.0	14.4	15.15	15.9	1.0	21.5	27.9	1160
1SMB14AT3G	LK	14	5.0	15.6	16.4	17.2	1.0	23.2	25.8	1085
1SMB15AT3G	LM	15	5.0	16.7	17.6	18.5	1.0	24.4	24.0	1020
1SMB16AT3G	LP	16	5.0	17.8	18.75	19.7	1.0	26.0	23.1	965
1SMB17AT3G	LR	17	5.0	18.9	19.9	20.9	1.0	27.6	21.7	915
1SMB18AT3G	LT	18	5.0	20.0	21.05	22.1	1.0	29.2	20.5	870
1SMB20AT3G	LV	20	5.0	22.2	23.35	24.5	1.0	32.4	18.5	790
1SMB22AT3G	LX	22	5.0	24.4	25.65	26.9	1.0	35.5	16.9	730
1SMB24AT3G	LZ	24	5.0	26.7	28.1	29.5	1.0	38.9	15.4	675
1SMB26AT3G	ME	26	5.0	28.9	30.4	31.9	1.0	42.1	14.2	630
1SMB28AT3G	MG	28	5.0	31.1	32.75	34.4	1.0	45.4	13.2	590
1SMB30AT3G	MK	30	5.0	33.3	35.05	36.8	1.0	48.4	12.4	555
1SMB33AT3G	MM	33	5.0	36.7	38.65	40.6	1.0	53.3	11.3	510
1SMB36AT3G	MP	36	5.0	40.0	42.1	44.2	1.0	58.1	10.3	470
1SMB40AT3G	MR	40	5.0	44.4	46.75	49.1	1.0	64.5	9.3	430
1SMB43AT3G	MT	43	5.0	47.8	50.3	52.8	1.0	69.4	8.6	400
1SMB45AT3G	MV	45	5.0	50.0	52.65	55.3	1.0	72.7	8.3	385
1SMB48AT3G	MX	48	5.0	53.3	56.1	58.9	1.0	77.4	7.7	365
1SMB51AT3G	MZ	51	5.0	56.7	59.7	62.7	1.0	82.4	7.3	345
1SMB54AT3G	NE	54	5.0	60.0	63.15	66.3	1.0	87.1	6.9	330
1SMB58AT3G	NG	58	5.0	64.4	67.8	71.2	1.0	93.6	6.4	310
1SMB60AT3G	NK	60	5.0	66.7	70.2	73.7	1.0	96.8	6.2	300
1SMB64AT3G	NM	64	5.0	71.1	74.85	78.6	1.0	103	5.8	280
1SMB70AT3G	NP	70	5.0	77.8	81.9	86	1.0	113	5.3	260
1SMB75AT3G	NR	75	5.0	83.3	87.7	92.1	1.0	121	4.9	245
1SMB85AT3G	NV	85	55.0	94.4	99.2	104	1.0	137	4.4	220
1SMB90AT3G	NX	90	5.0	100	105.5	111	1.0	146	4.1	210
1SMB100AT3G	NZ	100	5.0	111	117	123	1.0	162	3.7	190
1SMB110AT3G	PE	110	5.0	122	128.5	135	1.0	177	3.4	175
1SMB120AT3G	PG	120	5.0	133	140	147	1.0	193	3.1	160
1SMB130AT3G	PK	130	5.0	144	151.5	159	1.0	209	2.9	150
1SMB150AT3G	PM	150	5.0	167	176	185	1.0	243	2.5	135
1SMB160AT3G	PP	160	5.0	178	187.5	197	1.0	259	2.3	125
1SMB170AT3G	PR	170	5.0	189	199	209	1.0	275	2.2	120

6. A transient suppressor is normally selected according to the working peak reverse voltage (V_{RWM}), which should be equal to or greater than the DC or continuous peak operating voltage level.
7. V_{BR} measured at pulse test current I_T at an ambient temperature of 25°C.
8. Surge current waveform per Figure 2 and derate per Figure 4 of the General Data − 600 W at the beginning of this group.
9. Bias Voltage = 0 V, F = 1 MHz, T_J = 25°C

†Please see 1SMB10CAT3 to 1SMB78CAT3 for Bidirectional devices.

*Include SZ-prefix devices where applicable.

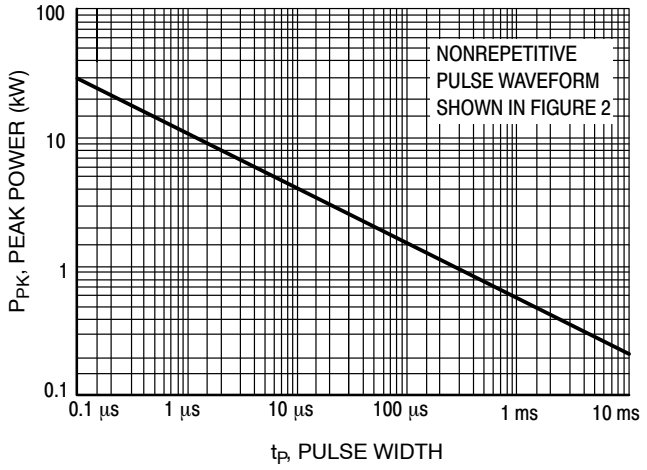

Figure 1. Pulse Rating Curve

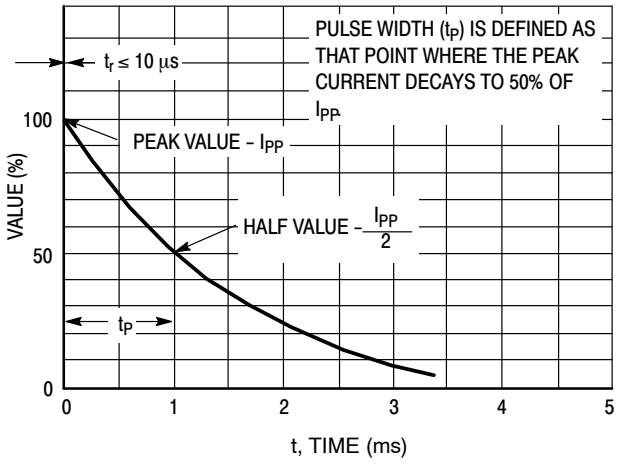

Figure 2. Pulse Waveform

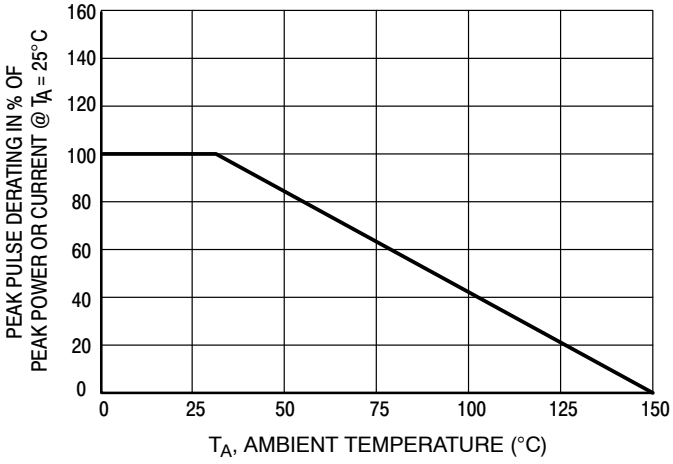

Figure 3. Pulse Derating Curve

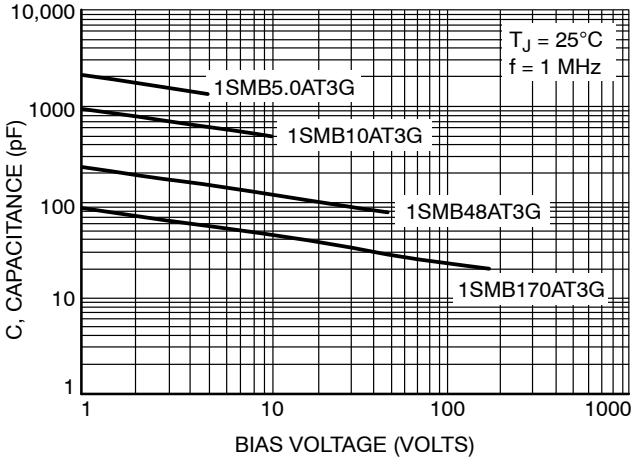

Figure 4. Typical Junction Capacitance vs. Bias Voltage

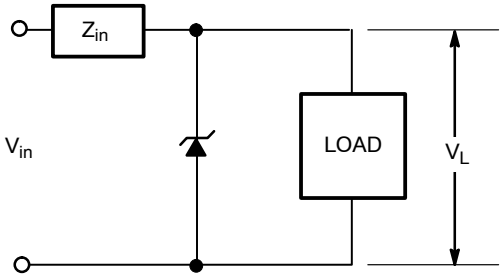

Figure 5. Typical Protection Circuit

APPLICATION NOTES

Response Time

In most applications, the transient suppressor device is placed in parallel with the equipment or component to be protected. In this situation, there is a time delay associated with the capacitance of the device and an overshoot condition associated with the inductance of the device and the inductance of the connection method. The capacitive effect is of minor importance in the parallel protection scheme because it only produces a time delay in the transition from the operating voltage to the clamp voltage as shown in Figure 6.

The inductive effects in the device are due to actual turn-on time (time required for the device to go from zero current to full current) and lead inductance. This inductive effect produces an overshoot in the voltage across the equipment or component being protected as shown in Figure 7. Minimizing this overshoot is very important in the application, since the main purpose for adding a transient suppressor is to clamp voltage spikes. The SMB series have a very good response time, typically < 1.0 ns and negligible inductance. However, external inductive effects could produce unacceptable overshoot. Proper circuit layout, minimum lead lengths and placing the suppressor device as close as possible to the equipment or components to be protected will minimize this overshoot.

Some input impedance represented by Z_{in} is essential to prevent overstress of the protection device. This impedance should be as high as possible, without restricting the circuit operation.

Duty Cycle Derating

The data of Figure 1 applies for non-repetitive conditions and at a lead temperature of 25°C. If the duty cycle increases, the peak power must be reduced as indicated by the curves of Figure 8. Average power must be derated as the lead or ambient temperature rises above 25°C. The average power derating curve normally given on data sheets may be normalized and used for this purpose.

At first glance the derating curves of Figure 8 appear to be in error as the 10 ms pulse has a higher derating factor than the 10 μs pulse. However, when the derating factor for a given pulse of Figure 8 is multiplied by the peak power value of Figure 1 for the same pulse, the results follow the expected trend.

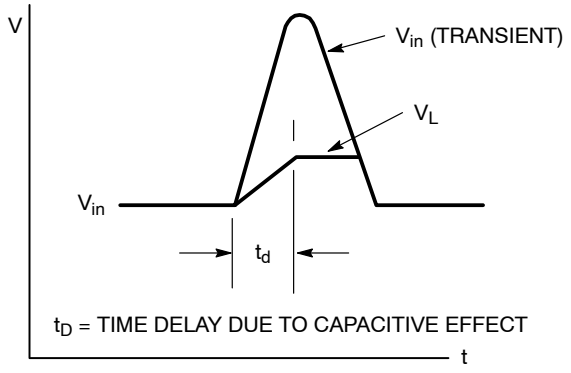

Figure 6.

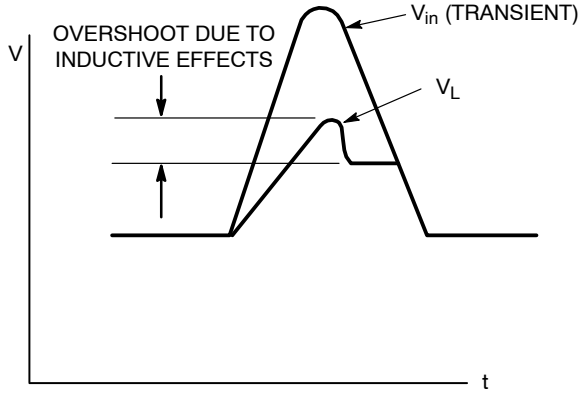

Figure 7.

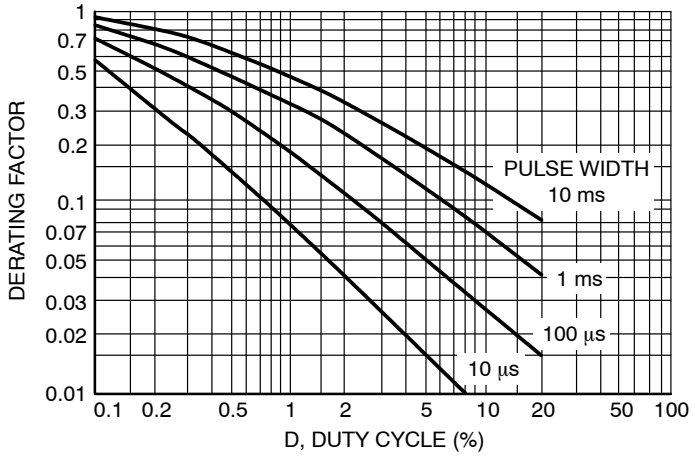

Figure 8. Typical Derating Factor for Duty Cycle

UL RECOGNITION

The entire series has *Underwriters Laboratory Recognition* for the classification of protectors (QVGQ2) under the UL standard for safety 497B and File #E210057. Many competitors only have one or two devices recognized or have recognition in a non-protective category. Some competitors have no recognition at all. With the UL497B recognition, our parts successfully passed several tests including Strike Voltage Breakdown test, Endurance Conditioning, Temperature test, Dielectric Voltage-Withstand test, Discharge test and several more.

Whereas, some competitors have only passed a flammability test for the package material, we have been recognized for much more to be included in their Protector category.

PACKAGE DIMENSIONS

SMB
CASE 403A−03
ISSUE H

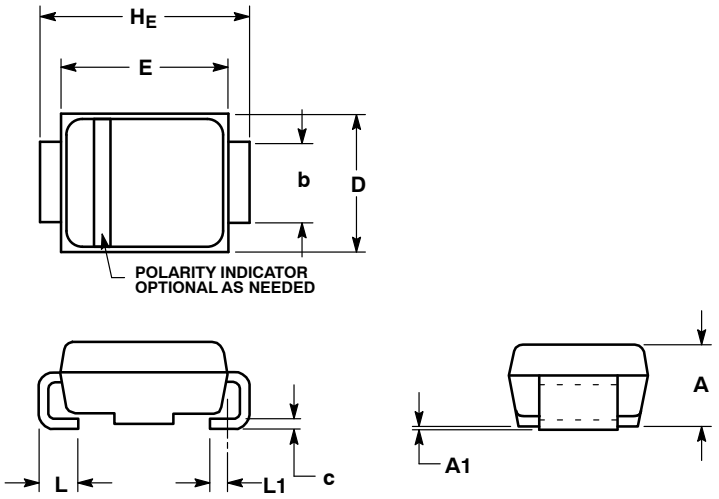

NOTES:
1. DIMENSIONING AND TOLERANCING PER ANSI Y14.5M, 1982.
2. CONTROLLING DIMENSION: INCH.
3. D DIMENSION SHALL BE MEASURED WITHIN DIMENSION P.

	MILLIMETERS			INCHES		
DIM	MIN	NOM	MAX	MIN	NOM	MAX
A	1.90	2.20	2.28	0.075	0.087	0.090
A1	0.05	0.10	0.19	0.002	0.004	0.007
b	1.96	2.03	2.20	0.077	0.080	0.087
c	0.15	0.23	0.31	0.006	0.009	0.012
D	3.30	3.56	3.95	0.130	0.140	0.156
E	4.06	4.32	4.60	0.160	0.170	0.181
H_E	5.21	5.44	5.60	0.205	0.214	0.220
L	0.76	1.02	1.60	0.030	0.040	0.063
L1	0.51 REF			0.020 REF		

SOLDERING FOOTPRINT*

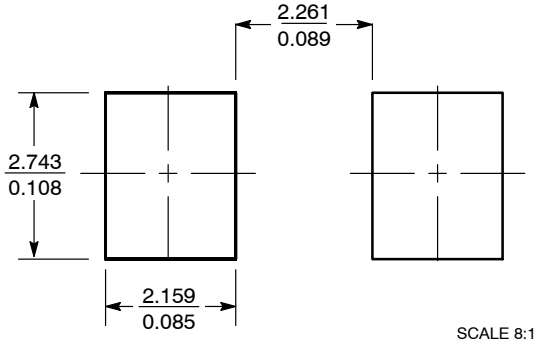

SCALE 8:1 $\left(\frac{mm}{inches}\right)$

*For additional information on our Pb−Free strategy and soldering details, please download the ON Semiconductor Soldering and Mounting Techniques Reference Manual, SOLDERRM/D.

SURMETIC is a registered trademark of Semiconductor Components Industries, LLC.

ON Semiconductor and ON are registered trademarks of Semiconductor Components Industries, LLC (SCILLC). SCILLC reserves the right to make changes without further notice to any products herein. SCILLC makes no warranty, representation or guarantee regarding the suitability of its products for any particular purpose, nor does SCILLC assume any liability arising out of the application or use of any product or circuit, and specifically disclaims any and all liability, including without limitation special, consequential or incidental damages. "Typical" parameters which may be provided in SCILLC data sheets and/or specifications can and do vary in different applications and actual performance may vary over time. All operating parameters, including "Typicals" must be validated for each customer application by customer's technical experts. SCILLC does not convey any license under its patent rights nor the rights of others. SCILLC products are not designed, intended, or authorized for use as components in systems intended for surgical implant into the body, or other applications intended to support or sustain life, or for any other application in which the failure of the SCILLC product could create a situation where personal injury or death may occur. Should Buyer purchase or use SCILLC products for any such unintended or unauthorized application, Buyer shall indemnify and hold SCILLC and its officers, employees, subsidiaries, affiliates, and distributors harmless against all claims, costs, damages, and expenses, and reasonable attorney fees arising out of, directly or indirectly, any claim of personal injury or death associated with such unintended or unauthorized use, even if such claim alleges that SCILLC was negligent regarding the design or manufacture of the part. SCILLC is an Equal Opportunity/Affirmative Action Employer. This literature is subject to all applicable copyright laws and is not for resale in any manner.

PUBLICATION ORDERING INFORMATION

LITERATURE FULFILLMENT:
Literature Distribution Center for ON Semiconductor
P.O. Box 5163, Denver, Colorado 80217 USA
Phone: 303−675−2175 or 800−344−3860 Toll Free USA/Canada
Fax: 303−675−2176 or 800−344−3867 Toll Free USA/Canada
Email: orderlit@onsemi.com

N. American Technical Support: 800−282−9855 Toll Free USA/Canada
Europe, Middle East and Africa Technical Support:
Phone: 421 33 790 2910
Japan Customer Focus Center
Phone: 81−3−5817−1050

ON Semiconductor Website: **www.onsemi.com**

Order Literature: http://www.onsemi.com/orderlit

For additional information, please contact your local Sales Representative

Looking for pricing, stock, or lifecycle information?

Click below to explore more details on WIN SOURCE:

- View 1SMB28AT3 on WIN SOURCE
- ON Semiconductor Information

Optimize Your Supply Chain with WIN SOURCE Solutions

- Global Sourcing Solution
- Obsolete Management
- Cost Control Management
- Shortage Management
- Alternative Solution
- Excess Inventory Management