freescale
QorIQ



QorIQ P Series Processors

QorIQ P1016 and P1025 Communications Processors

The QorIQ P1 family, which includes the P1016 and P1025 communications processors, offers the value of smart integration and efficient power for a wide variety of applications in the networking, telecom, defense and industrial markets. Based on 45 nm technology for low-power implementation, the P1016 and P1025 processors provide single- and dualcore options from 400–667 MHz performance range, together with advanced security and a rich set of interfaces.

The P1016 and P1025 processors are perfectly suited for multiservice gateways, Ethernet switch controllers, wireless LAN access points and high-performance general-purpose control processor applications with tight thermal constraints.

The P1016 and P1025 processors are pin compatible with the P1015 and P1024 products and software compatible with the P1011/P1020 and P2010/P2020, offering a six-chip range of cost-effective solutions. Scaling from a single core at 400 MHz (P1016) to a dual core at 1.2 GHz per core (P2020), together these QorIQ platforms deliver an impressive 4.5x aggregate frequency range.

The P1016 and P1025 platforms both feature the e500 Power Architecture core and peripherals, and are fully software compatible with existing PowerQUICC processors. This enables customers to create a product with multiple performance points from a single board design. The P1025 dual-core processor supports both symmetric and asymmetric processing, enabling customers to further optimize their design with the same applications running across each core or serialize their application using the cores for different processing tasks.

QorIQ P1016 and P1025 Block Diagram

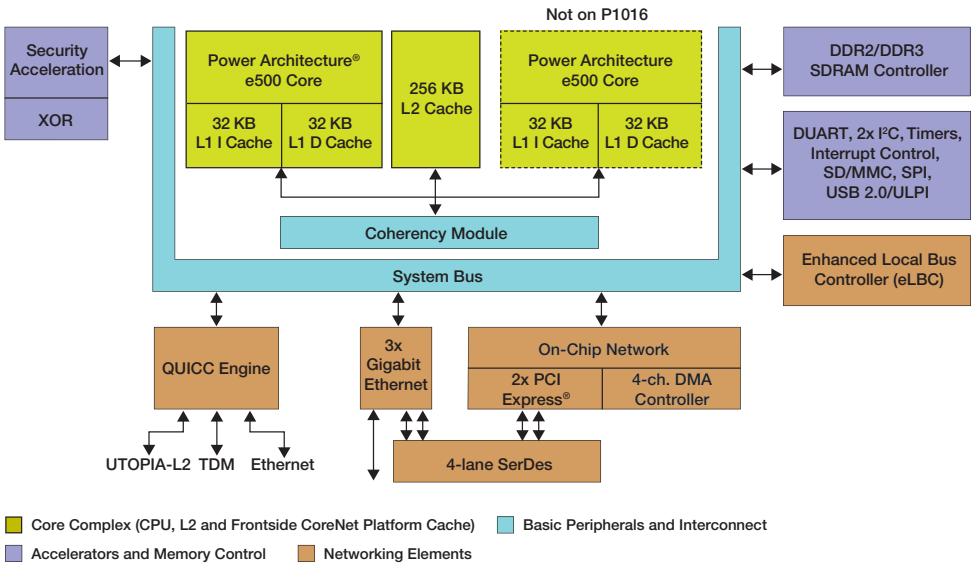

BUILT ON Power

The P1016 and P1025 processors have an advanced set of features for ease of use. The 256 KB L2 cache offers incremental configuration to partition the cache between the two cores or to configure it as SRAM or stashing memory. The integrated security engine supports the cryptographic algorithms commonly used in IPsec, SSL, 3GPP and other networking and wireless security protocols. The memory controller offers future-proofing against memory technology migration with support for DDR3. It also supports error correction codes, a baseline requirement for any high-reliability system.

These processors integrate a rich set of interfaces, including a multiprotocol SerDes, Gigabit Ethernet, QUICC Engine module, PCI Express® and USB. The three 10/100/1000 Ethernet ports support advanced packet parsing, flow control and quality of service features, as well as IEEE® 1588 time-stamping—all ideal for managing the data path traffic between the LAN and WAN interface. The QUICC Engine module provides UTOPIA-L2, TDM and 10/100 Ethernet interfaces as well as a programmable RISC engine to offload protocol termination from the main CPU cores. Four SerDes lanes can be portioned across two PCI Express ports and two SGMII ports. The PCI Express ports can provide connectivity to IEEE 802.11n radio cards for wireless support. USB or SD/MMC interfaces can be used to support local storage. Multiple memory connection ports are available, including the 16-bit local bus, a USB 2.0 controller, enhanced secure digital host controller (eSDHC) and serial peripheral interface (SPI).

Target Applications

The P1016 and P1025 processors serve in a wide variety of applications. The devices are well suited for various combinations of data plane and control plane workloads in networking and telecom applications. With an available junction temperature range of –40 ºC to +125 ºC, the devices can be used in power-sensitive defense and industrial applications and outdoor environments less protected from the elements. The devices' primary target applications are networking and telecom linecards.

A multiservice router or business gateway requires a combination of high performance and a rich set of peripherals to support the data path throughputs and required system functionality. The P1016 and P1025 devices offer a scalable platform to develop a range of products that can support the same feature set. The QUICC Engine module, as well as integrated 10/100/1000 Ethernet controllers with classification and QoS capabilities, are ideal for managing the data path traffic between the LAN and WAN interface. PCI Express ports can provide connectivity to IEEE 802.11n radio cards for wireless support, TDM for legacy phone interfaces to support voice and the USB or SD/MMC interfaces can be used to support local storage. The integrated security engine can provide encrypted secure communications for remote users with VPN support.

Technical Specifications

- Dual (P1025) or single (P1016 high-performance Power Architecture e500 cores
- 36-bit physical addressing
- Double-precision floating-point support
- 32 KB L1 instruction cache and 32 KB L1 data cache for each core
- 400–667 MHz core clock frequency
- 256 KB L2 cache with ECC, also configurable as SRAM and stashing memory
- Three 10/100/1000 Mb/s enhanced threespeed Ethernet controllers (eTSECs)
- TCP/IP acceleration and classification capabilities
- IEEE 1588 support
- Lossless flow control
- RGMII, SGMII
- High-speed interfaces (not all available simultaneously)
- Four SerDes to 3.125 GHz multiplexed across controllers
- Two PCI Express controllers
- Two SGMII interfaces
- QUICC Engine module
- UTOPIA-L2
- Up to two 10/100 Ethernet interfaces
- Up to four T1/E1/J1/E3 or DS-3 serial interfaces
- Up to four HDLC interfaces with 128 channels of HDLC
- Up to four BISYNC interfaces
- Up to four UART interfaces
- SPI interfaces
- GPIO
- High-Speed USB controller (USB 2.0)
- Host and device support
- Enhanced host controller interface (EHCI)
- ULPI interface to PHY
- Enhanced secure digital host controller (eSDHC)
- Serial peripheral interface
- Integrated security engine (SEC 3.3)
- Crypto algorithm support includes 3DES, AES, RSA/ECC, MD5/SHA, ARC4, Snow 3G and FIPS deterministic RNG
- Single-pass encryption/message authentication for common security protocols (e.g., IPsec, SSL, SRTP, WiMAX)
- XOR acceleration
- 32-bit DDR3 SDRAM memory controller with ECC support
- Programmable interrupt controller (PIC) compliant with OpenPIC standard
- Four-channel DMA controller
- Two I^2C controllers, DUART, timers
- Enhanced local bus controller (eLBC)
- Sixteen general-purpose I/O signals
- Package: 561-pin wirebond power-BGA (TEPBGA1)

For more information, please visit freescale.com/QorIQ

Freescale, the Freescale logo, PowerQUICC and QorIQ are trademarks of Freescale Semiconductor, Inc., Reg. U.S. Pat. & Tm. Off. QUICC Engine and CoreNet are trademarks of Freescale Semiconductor, Inc. All other product or service names are the property of their respective owners. The Power Architecture and Power.org word marks and the Power and Power.org logos and related marks are trademarks and service marks licensed by Power.org. © 2010, 2013, 2015 Freescale Semiconductor, Inc.

Document Number: QP1025FS REV 4

Looking for pricing, stock, or lifecycle information?

Click below to explore more details on WIN SOURCE:

- View P1016NXE5BFB on WIN SOURCE
- NXP / Nexperia Information

Optimize Your Supply Chain with WIN SOURCE Solutions

- Global Sourcing Solution
- Obsolete Management
- Cost Control Management
- Shortage Management
- Alternative Solution
- Excess Inventory Management