

QorIQ Communications Platforms

P Series

BUILT ON Power

QorIQ P1015 and P1024 communications processors

Overview

Freescale QorIQ communications platforms are the next-generation evolution of our leading PowerQUICC communications processors. Built using high-performance Power Architecture® cores, QorIQ platforms enable a new era of networking innovation where the reliability, security and quality of service for every connection matters.

QorIQ P1015 and P1024 Communications Processors

The QorIQ P1 family, which includes the P1015 and P1024 communications processors, offers the value of smart integration and efficient power for a wide variety of applications in the networking, telecom, defense and industrial markets. Based on 45 nm technology for low power, the P1015 and P1024 processors provide single- and dual-core options from 400 MHz to 667 MHz, together with advanced security and a rich set of interfaces.

The P1015 and P1024 processors are perfectly suited for multi-service gateways, Ethernet switch controllers, wireless LAN access points and high-performance general-purpose control processor applications with tight thermal constraints.

The P1015 and P1024 processors are pin-compatible with the QorIQ P1016, P1025 products, and software compatible with the P1011/P1020 and P2010/P2020 offering a six-chip range of cost-effective solutions. Scaling from a single core at 400 MHz (P1015) to a dual core at 1.2 GHz per core (P2020), the two QorIQ platforms deliver an impressive 4.5x aggregate frequency range.

The P1015 and P1024 platforms both feature the e500 Power Architecture core and peripherals, and are fully software compatible with the existing PowerQUICC processors. This enables you to create a product with multiple performance points with a common software architecture. The P1024 dual-core processor supports both symmetric and asymmetric processing, enabling you to further optimize your design with the same applications running on each core or serialize your application using the cores for different processing tasks.

QorIQ P1015 and P1024 Block Diagram

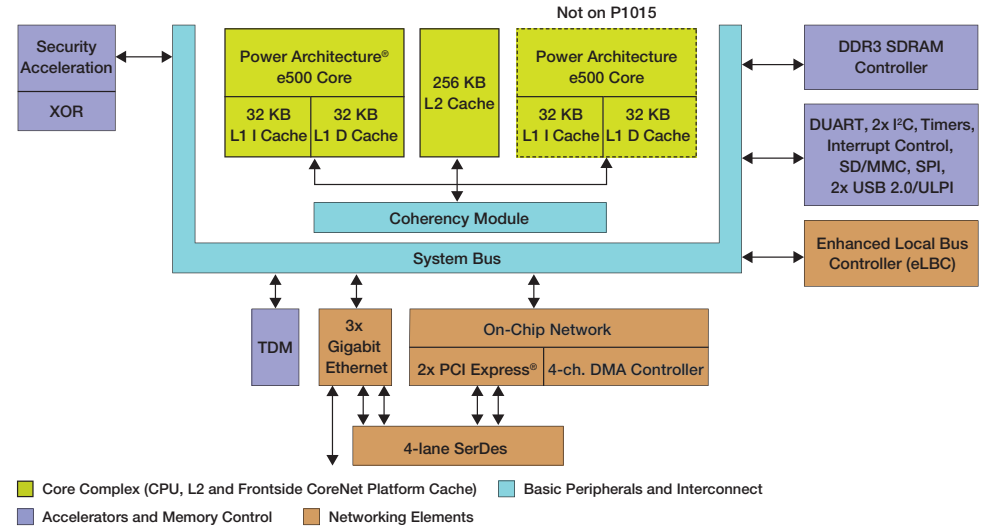

freescale™ QorIQ

The P1015 and P1024 processors have an advanced set of features for ease of use. The 256 KB L2 cache offers incremental configuration to partition the cache between the two cores or to configure it as SRAM or stashing memory. The integrated security engine supports the cryptographic algorithms commonly used in IPsec, SSL, 3GPP and other networking and wireless security protocols. The memory controller offers future-proofing against memory technology migration with support for DDR3. It also supports error correction codes, a baseline requirement for any high-reliability system.

The P1015 and P1024 processors integrate a rich set of interfaces, including a multi-protocol SerDes, Gigabit Ethernet, PCI Express® and USB. The three 10/100/1000 Ethernet ports support advanced packet parsing, flow control and quality of service features, as well as IEEE® 1588 time-stamping—all ideal for managing the data path traffic between the LAN and WAN interface. A TDM interface can support voice for legacy phone applications. Four SerDes lanes can be portioned across two PCI Express ports and two SGMII ports. The PCI Express ports can provide connectivity to IEEE 802.11n radio cards for wireless support. USB or SD/MMC interfaces can be used to support local storage. A second USB interface is also available to support USB attached printers or as a console port. Multiple memory connection ports are available, including the 16-bit local bus, two USB 2.0 controllers, eSDHC and SPI.

Target Applications

The P1015 and P1024 processors serve in a wide variety of applications. The devices are well-suited for various combinations of data plane and control plane workloads in networking and telecom applications. With an available junction temperature range of –40° C to +125° C, the devices can be used in power-sensitive defense and industrial applications, and outdoor environments less protected from the environment. The devices' primary target applications are networking and telecom linecards.

A multi-service router or business gateway requires a combination of high performance and a rich set of peripherals to support the data path throughputs and required system functionality. The P1015 and P1024 devices offer a scalable platform to develop a range of products that can support the same feature set. Integrated 10/100/1000 Ethernet controllers with classification and QoS capabilities are ideal for managing the data path traffic between the LAN and WAN interface. PCI Express ports can provide connectivity to IEEE 802.11n radio cards for wireless support, TDM for legacy phone interfaces to support voice, the USB or SD/MMC interfaces can be used to support local storage, the second USB interface is also available to support USB attached printers or as a console port. And the integrated security engine can provide encrypted secure communications for remote users with VPN support.

Technical Specifications

- Dual (P1024) or single (P1015) high-performance Power Architecture e500 cores
- 36-bit physical addressing
- Double-precision floating-point support
- 32 KB L1 instruction cache and 32 KB L1 data cache for each core
- 400 MHz to 667 MHz core clock frequency
- 256 KB L2 cache with ECC, also configurable as SRAM and stashing memory
- Three 10/100/1000 Mb/s enhanced three-speed Ethernet controllers (eTSECs)
- TCP/IP acceleration and classification capabilities
- IEEE 1588 support
- Lossless flow control
- RGMII, SGMII
- High-speed interfaces (not all available simultaneously)
- Four SerDes to 3.125 GHz multiplexed across controllers
- Two PCI Express controllers
- Two SGMII interfaces
- Two high-speed USB controllers (USB 2.0)
- Host and device support
- Enhanced host controller interface (EHCI)
- ULPI interface to PHY
- Enhanced secure digital host controller (eSDHC)
- Serial peripheral interface
- Integrated security engine (SEC 3.3)
- Crypto algorithm support includes 3DES, AES, RSA/ECC, MD5/SHA, ARC4, Snow 3G, and FIPS deterministic RNG
- Single pass encryption/message authentication for common security protocols (IPsec, SSL, SRTP, WiMAX)
- XOR acceleration
- 32-bit DDR3 SDRAM memory controller with ECC support
- Programmable interrupt controller (PIC) compliant with OpenPIC standard
- Four-channel DMA controller
- Two I^2C controllers, DUART, timers
- Enhanced local bus controller (eLBC)
- 16 general-purpose I/O signals
- Package: 561-pin wirebond power-BGA (TEPBGA1)

For more information, please visit freescale.com/QorIQ

Freescale, the Freescale logo, PowerQUICC and QorIQ are trademarks of Freescale Semiconductor, Inc., Reg. U.S. Pat. & Tm. Off. QUICC Engine is a trademark of Freescale Semiconductor, Inc. All other product or service names are the property of their respective owners. The Power Architecture and Power.org word marks and the Power and Power.org logos and related marks are trademarks and service marks licensed by Power.org. © 2010, 2013 Freescale Semiconductor, Inc.

Document Number: QP1024FS REV 2

Looking for pricing, stock, or lifecycle information?

Click below to explore more details on WIN SOURCE:

- View P1015NXE5BFB on WIN SOURCE
- NXP / Nexperia Information

Optimize Your Supply Chain with WIN SOURCE Solutions

- Global Sourcing Solution
- Obsolete Management
- Cost Control Management
- Shortage Management
- Alternative Solution
- Excess Inventory Management