Freescale Semiconductor
Technical Data

Document Number: MPC8347EEC
Rev. 11, 02/2009

MPC8347E PowerQUICC™ II Pro Integrated Host Processor Hardware Specifications

The MPC8347E PowerQUICC™ II Pro is a next generation PowerQUICC II integrated host processor. The MPC8347E contains a PowerPC™ processor core built on Power Architecture™ technology with system logic for networking, storage, and general-purpose embedded applications. For functional characteristics of the processor, refer to the *MPC8349E PowerQUICC™ II Pro Integrated Host Processor Family Reference Manual*.

To locate published errata or updates for this document, refer to the MPC8347E product summary page on our website listed on the back cover of this document or, contact your local Freescale sales office.

NOTE

The information in this document is accurate for revision 1.1 silicon and earlier. For information on revision 3.0 silicon and later versions (for orderable part numbers ending in A or B), see the *MPC8347EA PowerQUICC™ II Pro Integrated Host Processor Hardware Specifications*.

See Section 23.1, "Part Numbers Fully Addressed by This Document," for silicon revision level determination.

Contents

1. Overview 2
2. Electrical Characteristics 7
3. Power Characteristics 10
4. Clock Input Timing 12
5. RESET Initialization 13
6. DDR SDRAM 15
7. DUART 21
8. Ethernet: Three-Speed Ethernet, MII Management . 22
9. USB 33
10. Local Bus 35
11. JTAG 42
12. I^2C 45
13. PCI 47
14. Timers 50
15. GPIO 51
16. IPIC 52
17. SPI 53
18. Package and Pin Listings 55
19. Clocking 76
20. Thermal 84
21. System Design Information 91
22. Document Revision History 95
23. Ordering Information 98

© Freescale Semiconductor, Inc., 2005–2009. All rights reserved.

freescale™ semiconductor

1 Overview

This section provides a high-level overview of the MPC8347E features. Figure 1 shows the major functional units within the MPC8347E.

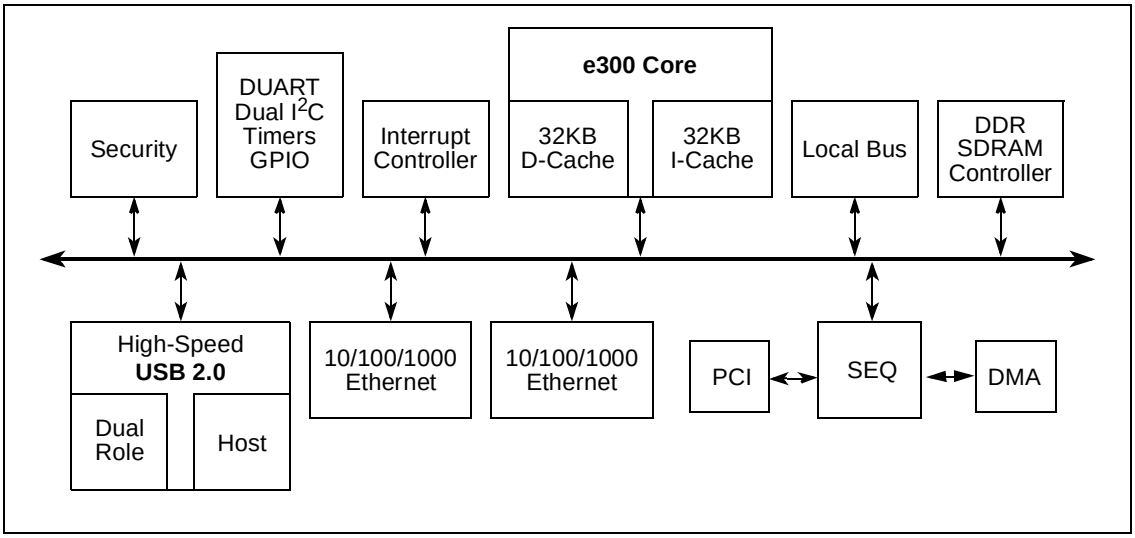

Figure 1. MPC8347E Block Diagram

Major features of the MPC8347E are as follows:

- Embedded PowerPC e300 processor core; operates at up to 667 MHz
  - High-performance, superscalar processor core
  - Floating-point, integer, load/store, system register, and branch processing units
  - 32-Kbyte instruction cache, 32-Kbyte data cache
  - Lockable portion of L1 cache
  - Dynamic power management
  - Software-compatible with the other Freescale processor families that implement Power Architecture technology
- Double data rate, DDR SDRAM memory controller
  - Programmable timing for DDR-1 SDRAM
  - 32- or 64-bit data interface, up to 333-MHz data rate for TBGA, 266 MHz for PBGA
  - Four banks of memory, each up to 1 Gbyte
  - DRAM chip configurations from 64 Mbit to 1 Gbit with x8/x16 data ports
  - Full error checking and correction (ECC) support
  - Page mode support (up to 16 simultaneous open pages)
  - Contiguous or discontiguous memory mapping
  - Read-modify-write support
  - Sleep mode for self-refresh SDRAM
  - Auto refresh

  - On-the-fly power management using CKE
  - Registered DIMM support
  - 2.5-V SSTL2 compatible I/O
- Dual three-speed (10/100/1000) Ethernet controllers (TSECs)
  - Dual controllers designed to comply with IEEE 802.3®, 802.3u®, 820.3x®, 802.3z®, 802.3ac® standards
  - Ethernet physical interfaces:
    - 1000 Mbps IEEE Std. 802.3 GMII/RGMII, IEEE Std. 802.3z TBI/RTBI, full-duplex
    - 10/100 Mbps IEEE Std. 802.3 MII full- and half-duplex
  - Buffer descriptors are backward-compatible with MPC8260 and MPC860T 10/100 programming models
  - 9.6-Kbyte jumbo frame support
  - RMON statistics support
  - Internal 2-Kbyte transmit and 2-Kbyte receive FIFOs per TSEC module
  - MII management interface for control and status
  - Programmable CRC generation and checking
- PCI interface
  - Designed to comply with *PCI Specification Revision 2.2*
  - Data bus width:
    - 32-bit data PCI interface operating at up to 66 MHz
  - PCI 3.3-V compatible
  - PCI host bridge capabilities
  - PCI agent mode on PCI interface
  - PCI-to-memory and memory-to-PCI streaming
  - Memory prefetching of PCI read accesses and support for delayed read transactions
  - Posting of processor-to-PCI and PCI-to-memory writes
  - On-chip arbitration supporting five masters on PCI
  - Accesses to all PCI address spaces
  - Parity supported
  - Selectable hardware-enforced coherency
  - Address translation units for address mapping between host and peripheral
  - Dual address cycle for target
  - Internal configuration registers accessible from PCI
- Security engine is optimized to handle all the algorithms associated with IPSec, SSL/TLS, SRTP, IEEE Std. 802.11i®, iSCSI, and IKE processing. The security engine contains four crypto-channels, a controller, and a set of crypto execution units (EUs):
  - Public key execution unit (PKEU) :
    - RSA and Diffie-Hellman algorithms

  - Programmable field size up to 2048 bits
  - Elliptic curve cryptography
  - F2m and F(p) modes
  - Programmable field size up to 511 bits
- Data encryption standard (DES) execution unit (DEU)
  - DES and 3DES algorithms
  - Two key (K1, K2) or three key (K1, K2, K3) for 3DES
  - ECB and CBC modes for both DES and 3DES
- Advanced encryption standard unit (AESU)
  - Implements the Rijndael symmetric-key cipher
  - Key lengths of 128, 192, and 256 bits
  - ECB, CBC, CCM, and counter (CTR) modes
- ARC four execution unit (AFEU)
  - Stream cipher compatible with the RC4 algorithm
  - 40- to 128-bit programmable key
- Message digest execution unit (MDEU)
  - SHA with 160- or 256-bit message digest
  - MD5 with 128-bit message digest
  - HMAC with either algorithm
- Random number generator (RNG)
- Four crypto-channels, each supporting multi-command descriptor chains
  - Static and/or dynamic assignment of crypto-execution units through an integrated controller
  - Buffer size of 256 bytes for each execution unit, with flow control for large data sizes

- Universal serial bus (USB) dual role controller
  - USB on-the-go mode with both device and host functionality
  - Complies with USB specification Rev. 2.0
  - Can operate as a stand-alone USB device
    - One upstream facing port
    - Six programmable USB endpoints
  - Can operate as a stand-alone USB host controller
    - USB root hub with one downstream-facing port
    - Enhanced host controller interface (EHCI) compatible
    - High-speed (480 Mbps), full-speed (12 Mbps), and low-speed (1.5 Mbps) operations
  - External PHY with UTMI, serial and UTMI+ low-pin interface (ULPI)
- Universal serial bus (USB) multi-port host controller
  - Can operate as a stand-alone USB host controller
    - USB root hub with one or two downstream-facing ports

  - Enhanced host controller interface (EHCI) compatible
  - Complies with *USB Specification Rev. 2.0*
- High-speed (480 Mbps), full-speed (12 Mbps), and low-speed (1.5 Mbps) operations
- Direct connection to a high-speed device without an external hub
- External PHY with serial and low-pin count (ULPI) interfaces

- Local bus controller (LBC)
  - Multiplexed 32-bit address and data operating at up to 133 MHz
  - Four chip selects support four external slaves
  - Up to eight-beat burst transfers
  - 32-, 16-, and 8-bit port sizes controlled by an on-chip memory controller
  - Three protocol engines on a per chip select basis:
    - General-purpose chip select machine (GPCM)
    - Three user-programmable machines (UPMs)
    - Dedicated single data rate SDRAM controller
  - Parity support
  - Default boot ROM chip select with configurable bus width (8-, 16-, or 32-bit)
- Programmable interrupt controller (PIC)
  - Functional and programming compatibility with the MPC8260 interrupt controller
  - Support for 8 external and 35 internal discrete interrupt sources
  - Support for 1 external (optional) and 7 internal machine checkstop interrupt sources
  - Programmable highest priority request
  - Four groups of interrupts with programmable priority
  - External and internal interrupts directed to host processor
  - Redirects interrupts to external $\overline{\text{INTA}}$ pin in core disable mode.
  - Unique vector number for each interrupt source
- Dual industry-standard I^2C interfaces
  - Two-wire interface
  - Multiple master support
  - Master or slave I^2C mode support
  - On-chip digital filtering rejects spikes on the bus
  - System initialization data optionally loaded from I^2C-1 EPROM by boot sequencer embedded hardware
- DMA controller
  - Four independent virtual channels
  - Concurrent execution across multiple channels with programmable bandwidth control
  - All channels accessible to local core and remote PCI masters
  - Misaligned transfer capability

  - Data chaining and direct mode
  - Interrupt on completed segment and chain
- DUART
  - Two 4-wire interfaces (RxD, TxD, RTS, CTS)
  - Programming model compatible with the original 16450 UART and the PC16550D
- Serial peripheral interface (SPI) for master or slave
- General-purpose parallel I/O (GPIO)
  - 52 parallel I/O pins multiplexed on various chip interfaces
- System timers
  - Periodic interrupt timer
  - Real-time clock
  - Software watchdog timer
  - Eight general-purpose timers
- Designed to comply with IEEE Std. 1149.1™, JTAG boundary scan
- Integrated PCI bus and SDRAM clock generation

2 Electrical Characteristics

This section provides the AC and DC electrical specifications and thermal characteristics for the MPC8347E. The MPC8347E is currently targeted to these specifications. Some of these specifications are independent of the I/O cell, but are included for a more complete reference. These are not purely I/O buffer design specifications.

2.1 Overall DC Electrical Characteristics

This section covers the ratings, conditions, and other characteristics.

2.1.1 Absolute Maximum Ratings

Table 1 provides the absolute maximum ratings.

Table 1. Absolute Maximum Ratings[1]

Characteristic		Symbol	Max Value	Unit	Notes
Core supply voltage		V_{DD}	–0.3 to 1.32	V	
PLL supply voltage		AV_{DD}	–0.3 to 1.32	V	
DDR DRAM I/O voltage		GV_{DD}	–0.3 to 3.63	V	
Three-speed Ethernet I/O, MII management voltage		LV_{DD}	–0.3 to 3.63	V	
PCI, local bus, DUART, system control and power management, I^2C, and JTAG I/O voltage		OV_{DD}	–0.3 to 3.63	V	
Input voltage	DDR DRAM signals	MV_{IN}	–0.3 to (GV_{DD} + 0.3)	V	2, 5
	DDR DRAM reference	MV_{REF}	–0.3 to (GV_{DD} + 0.3)	V	2, 5
	Three-speed Ethernet signals	LV_{IN}	–0.3 to (LV_{DD} + 0.3)	V	4, 5
	Local bus, DUART, CLKIN, system control and power management, I^2C, and JTAG signals	OV_{IN}	–0.3 to (OV_{DD} + 0.3)	V	3, 5
	PCI	OV_{IN}	–0.3 to (OV_{DD} + 0.3)	V	6
Storage temperature range		T_{STG}	–55 to 150	°C	

Notes:

1. Functional and tested operating conditions are given in Table 2. Absolute maximum ratings are stress ratings only, and functional operation at the maximums is not guaranteed. Stresses beyond those listed may affect device reliability or cause permanent damage to the device.
2. **Caution:** MV_{IN} must not exceed GV_{DD} by more than 0.3 V. This limit can be exceeded for a maximum of 20 ms during power-on reset and power-down sequences.
3. **Caution:** OV_{IN} must not exceed OV_{DD} by more than 0.3 V. This limit can be exceeded for a maximum of 20 ms during power-on reset and power-down sequences.
4. **Caution:** LV_{IN} must not exceed LV_{DD} by more than 0.3 V. This limit can be exceeded for a maximum of 20 ms during power-on reset and power-down sequences.
5. (M,L,O)V_{IN} and MV_{REF} may overshoot/undershoot to a voltage and for a maximum duration as shown in Figure 2.
6. OV_{IN} on the PCI interface can overshoot/undershoot according to the PCI Electrical Specification for 3.3-V operation, as shown in Figure 3.

2.1.2 Power Supply Voltage Specification

Table 2 provides the recommended operating conditions for the MPC8347E. Note that the values in Table 2 are the recommended and tested operating conditions. Proper device operation outside these conditions is not guaranteed.

Table 2. Recommended Operating Conditions

Characteristic	Symbol	Recommended Value	Unit	Notes
Core supply voltage	V_{DD}	1.2 V ± 60 mV	V	1
PLL supply voltage	AV_{DD}	1.2 V ± 60 mV	V	1
DDR DRAM I/O supply voltage	GV_{DD}	2.5 V ± 125 mV	V	
Three-speed Ethernet I/O supply voltage	LV_{DD1}	3.3 V ± 330 mV 2.5 V ± 125 mV	V	
Three-speed Ethernet I/O supply voltage	LV_{DD2}	3.3 V ± 330 mV 2.5 V ± 125 mV	V	
PCI, local bus, DUART, system control and power management, I^2C, and JTAG I/O voltage	OV_{DD}	3.3 V ± 330 mV	V	

Note:

1 GV_{DD}, LV_{DD}, OV_{DD}, AV_{DD}, and V_{DD} must track each other and must vary in the same direction—either in the positive or negative direction.

Figure 2 shows the undershoot and overshoot voltages at the interfaces of the MPC8347E.

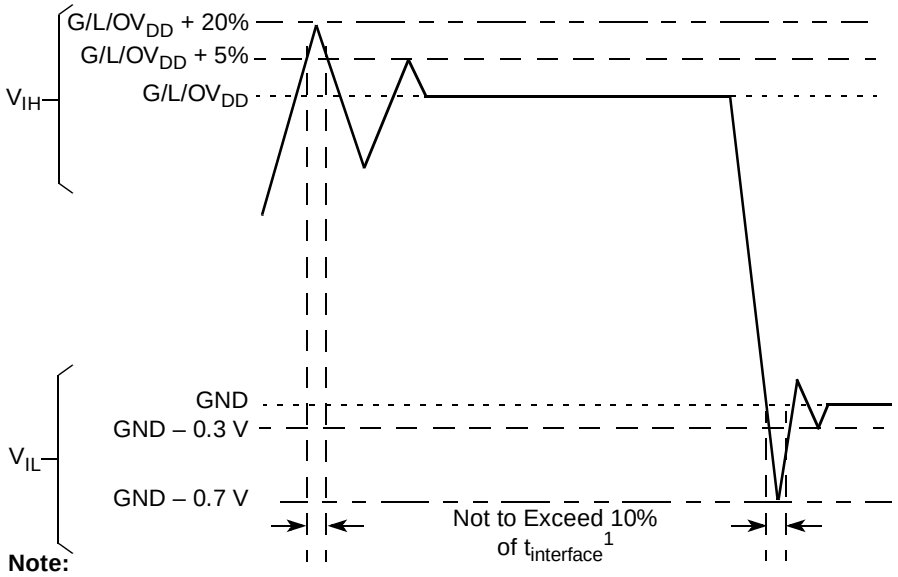

Note:

1. $t_{interface}$ refers to the clock period associated with the bus clock interface.

Figure 2. Overshoot/Undershoot Voltage for $GV_{DD}/OV_{DD}/LV_{DD}$

Figure 3 shows the undershoot and overshoot voltage of the PCI interface of the MPC8347E for the 3.3-V signals, respectively.

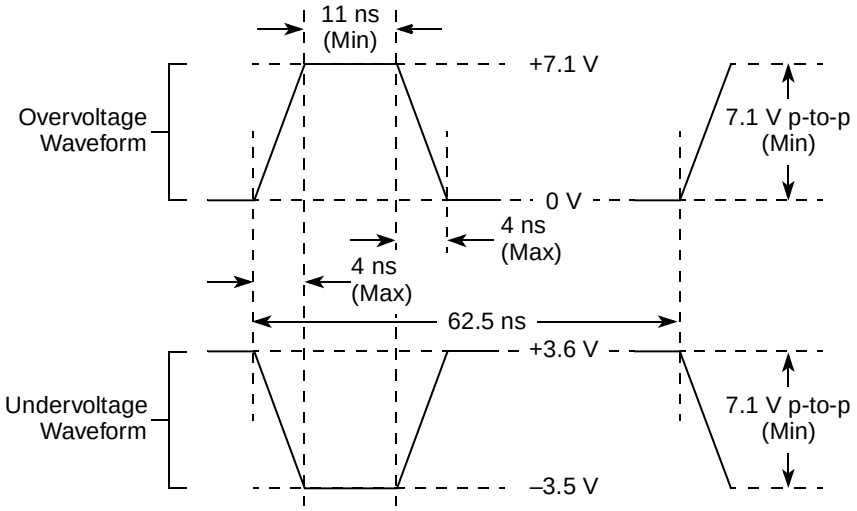

Figure 3. Maximum AC Waveforms on PCI Interface for 3.3-V Signaling

2.1.3 Output Driver Characteristics

Table 3 provides information on the characteristics of the output driver strengths. The values are preliminary estimates.

Table 3. Output Drive Capability

Driver Type	Output Impedance (Ω)	Supply Voltage
Local bus interface utilities signals	40	OV_{DD} = 3.3 V
PCI signals (not including PCI output clocks)	25	
PCI output clocks (including PCI_SYNC_OUT)	40	
DDR signal	18	GV_{DD} = 2.5 V
TSEC/10/100 signals	40	LV_{DD} = 2.5/3.3 V
DUART, system control, I^2C, JTAG, USB	40	OV_{DD} = 3.3 V
GPIO signals	40	OV_{DD} = 3.3 V, LV_{DD} = 2.5/3.3 V

2.2 Power Sequencing

MPC8347E does not require the core supply voltage and I/O supply voltages to be applied in any particular order. Note that during the power ramp up, before the power supplies are stable, there may be a period of time that I/O pins are actively driven. After the power is stable, as long as $\overline{\text{PORESET}}$ is asserted, most I/O pins are three-stated. To minimize the time that I/O pins are actively driven, it is recommended to apply core voltage before I/O voltage and assert $\overline{\text{PORESET}}$ before the power supplies fully ramp up.

3 Power Characteristics

The estimated typical power dissipation for the MPC8347E device is shown in Table 4.

Table 4. MPC8347E Power Dissipation[1]

	Core Frequency (MHz)	CSB Frequency (MHz)	Typical at T_J = 65	Typical[2,3]	Maximum[4]	Unit
PBGA	266	266	1.3	1.6	1.8	W
		133	1.1	1.4	1.6	W
	400	266	1.5	1.9	2.1	W
		133	1.4	1.7	1.9	W
	400	200	1.5	1.8	2.0	W
		100	1.3	1.7	1.9	W
TBGA	333	333	2.0	3.0	3.2	W
		166	1.8	2.8	2.9	W
	400	266	2.1	3.0	3.3	W
		133	1.9	2.9	3.1	W
	450	300	2.3	3.2	3.5	W
		150	2.1	3.0	3.2	W
	500	333	2.4	3.3	3.6	W
		166	2.2	3.1	3.4	W
	533	266	2.4	3.3	3.6	W
		133	2.2	3.1	3.4	W

1 The values do not include I/O supply power (OV_{DD}, LV_{DD}, GV_{DD}) or AV_{DD}. For I/O power values, see Table 5.

2 Typical power is based on a voltage of V_{DD} = 1.2 V, a junction temperature of T_J = 105°C, and a Dhrystone benchmark application.

3 Thermal solutions may need to design to a value higher than typical power based on the end application, T_A target, and I/O power.

4 Maximum power is based on a voltage of V_{DD} = 1.2 V, worst case process, a junction temperature of T_J = 105°C, and an artificial smoke test.

Table 5 shows the estimated typical I/O power dissipation for MPC8347E.

Table 5. MPC8347E Typical I/O Power Dissipation

Interface	Parameter	DDR2 GV_{DD} (1.8 V)	DDR1 GV_{DD} (2.5 V)	OV_{DD} (3.3 V)	LV_{DD} (3.3 V)	LV_{DD} (2.5 V)	Unit	Comments
DDR I/O 65% utilization 2.5 V Rs = 20 Ω Rt = 50 Ω 2 pair of clocks	200 MHz, 32 bits	—	0.42	—	—	—	W	—
	200 MHz, 64 bits	—	0.55	—	—	—	W	—
	266 MHz, 32 bits	—	0.5	—	—	—	W	—
	266 MHz, 64 bits	—	0.66	—	—	—	W	—
	300 MHz,[1] 32 bits	—	0.54	—	—	—	W	—
	300 MHz,[1] 64 bits	—	0.7	—	—	—	W	—
	333 MHz,[1] 32 bits	—	0.58	—	—	—	W	—
	333 MHz,[1] 64 bits	—	0.76	—	—	—	W	—
	400 MHz,[1] 32 bits	—	—	—	—	—		—
	400 MHz,[1] 64 bits	—	—	—	—	—		—
PCI I/O load = 30 pF	33 MHz, 32 bits	—	—	0.04	—	—	W	—
	66 MHz, 32 bits	—	—	0.07	—	—	W	—
Local bus I/O load = 25 pF	167 MHz, 32 bits	—	—	0.34	—	—	W	—
	133 MHz, 32 bits	—	—	0.27	—	—	W	—
	83 MHz, 32 bits	—	—	0.17	—	—	W	—
	66 MHz, 32 bits	—	—	0.14	—	—	W	—
	50 MHz, 32 bits	—	—	0.11	—	—	W	—
TSEC I/O load = 25 pF	MII	—	—	—	0.01	—	W	Multiply by number of interfaces used.
	GMII or TBI	—	—	—	0.06	—	W	
	RGMII or RTBI	—	—	—	—	0.04	W	
USB	12 MHz	—	—	0.01	—	—	W	Multiply by 2 if using 2 ports.
	480 MHz	—	—	0.2	—	—	W	
Other I/O		—	—	0.01	—	—	W	—

[1] TBGA package only.

4 Clock Input Timing

This section provides the clock input DC and AC electrical characteristics for the MPC8347E.

4.1 DC Electrical Characteristics

Table 7 provides the clock input (CLKIN/PCI_SYNC_IN) DC timing specifications for the MPC8347E.

Table 6. CLKIN DC Timing Specifications

Parameter	Condition	Symbol	Min	Max	Unit
Input high voltage	—	V_{IH}	2.7	OV_{DD} + 0.3	V
Input low voltage	—	V_{IL}	–0.3	0.4	V
CLKIN input current	$0 V \le V_{IN} \le OV_{DD}$	I_{IN}	—	±10	µA
PCI_SYNC_IN input current	$0 V \le V_{IN} \le 0.5 V$ or $OV_{DD} – 0.5 V \le V_{IN} \le OV_{DD}$	I_{IN}	—	±10	µA
PCI_SYNC_IN input current	$0.5 V \le V_{IN} \le OV_{DD} – 0.5 V$	I_{IN}	—	±50	µA

4.2 AC Electrical Characteristics

The primary clock source for the MPC8347E can be one of two inputs, CLKIN or PCI_CLK, depending on whether the device is configured in PCI host or PCI agent mode. Table 7 provides the clock input (CLKIN/PCI_CLK) AC timing specifications for the MPC8347E.

Table 7. CLKIN AC Timing Specifications

Parameter/Condition	Symbol	Min	Typical	Max	Unit	Notes
CLKIN/PCI_CLK frequency	f_{CLKIN}	—	—	66	MHz	1, 6
CLKIN/PCI_CLK cycle time	t_{CLKIN}	15	—	—	ns	—
CLKIN/PCI_CLK rise and fall time	t_{KH}, t_{KL}	0.6	1.0	2.3	ns	2
CLKIN/PCI_CLK duty cycle	t_{KHK}/t_{CLKIN}	40	—	60	%	3
CLKIN/PCI_CLK jitter	—	—	—	±150	ps	4, 5

Notes:

1. **Caution:** The system, core, USB, security, and TSEC must not exceed their respective maximum or minimum operating frequencies.
2. Rise and fall times for CLKIN/PCI_CLK are measured at 0.4 and 2.7 V.
3. Timing is guaranteed by design and characterization.
4. This represents the total input jitter—short term and long term—and is guaranteed by design.
5. The CLKIN/PCI_CLK driver's closed loop jitter bandwidth should be <500 kHz at –20 dB. The bandwidth must be set low to allow cascade-connected PLL-based devices to track CLKIN drivers with the specified jitter.
6. The Spread spectrum clocking. Is allowed with 1% input frequency down-spread at maximum 50KHz modulation rate regardless of input frequency.

5 RESET Initialization

This section describes the DC and AC electrical specifications for the reset initialization timing and electrical requirements of the MPC8347E.

5.1 RESET DC Electrical Characteristics

Table 8 provides the DC electrical characteristics for the RESET pins of the MPC8347E.

Table 8. RESET Pins DC Electrical Characteristics[1]

Characteristic	Symbol	Condition	Min	Max	Unit
Input high voltage	V_{IH}		2.0	OV_{DD} + 0.3	V
Input low voltage	V_{IL}		–0.3	0.8	V
Input current	I_{IN}			±5	μA
Output high voltage[2]	V_{OH}	I_{OH} = –8.0 mA	2.4	—	V
Output low voltage	V_{OL}	I_{OL} = 8.0 mA	—	0.5	V
Output low voltage	V_{OL}	I_{OL} = 3.2 mA	—	0.4	V

Notes:

1. This table applies for pins $\overline{\text{PORESET}}$, $\overline{\text{HRESET}}$, $\overline{\text{SRESET}}$, and $\overline{\text{QUIESCE}}$.
2. $\overline{\text{HRESET}}$ and $\overline{\text{SRESET}}$ are open drain pins, thus V_{OH} is not relevant for those pins.

5.2 RESET AC Electrical Characteristics

Table 9 provides the reset initialization AC timing specifications of the MPC8347E.

Table 9. RESET Initialization Timing Specifications

Parameter/Condition	Min	Max	Unit	Notes
Required assertion time of $\overline{\text{HRESET}}$ or $\overline{\text{SRESET}}$ (input) to activate reset flow	32	—	$t_{PCI_SYNC_IN}$	1
Required assertion time of $\overline{\text{PORESET}}$ with stable clock applied to CLKIN when the MPC8347E is in PCI host mode	32	—	t_{CLKIN}	2
Required assertion time of $\overline{\text{PORESET}}$ with stable clock applied to PCI_SYNC_IN when the MPC8347E is in PCI agent mode	32	—	$t_{PCI_SYNC_IN}$	1
$\overline{\text{HRESET}}$/$\overline{\text{SRESET}}$ assertion (output)	512	—	$t_{PCI_SYNC_IN}$	1
$\overline{\text{HRESET}}$ negation to $\overline{\text{SRESET}}$ negation (output)	16	—	$t_{PCI_SYNC_IN}$	1
Input setup time for POR configuration signals (CFG_RESET_SOURCE[0:2] and CFG_CLKIN_DIV) with respect to negation of $\overline{\text{PORESET}}$ when the MPC8347E is in PCI host mode	4	—	t_{CLKIN}	2
Input setup time for POR configuration signals (CFG_RESET_SOURCE[0:2] and CFG_CLKIN_DIV) with respect to negation of $\overline{\text{PORESET}}$ when the MPC8347E is in PCI agent mode	4	—	$t_{PCI_SYNC_IN}$	1

Table 9. RESET Initialization Timing Specifications (continued)

Parameter/Condition	Min	Max	Unit	Notes
Input hold time for POR configuration signals with respect to negation of $\overline{\text{HRESET}}$	0	—	ns	
Time for the MPC8347E to turn off POR configuration signals with respect to the assertion of $\overline{\text{HRESET}}$	—	4	ns	3
Time for the MPC8347E to turn on POR configuration signals with respect to the negation of $\overline{\text{HRESET}}$	1	—	$t_{PCI_SYNC_IN}$	1, 3

Notes:

1. $t_{PCI_SYNC_IN}$ is the clock period of the input clock applied to PCI_SYNC_IN. In PCI host mode, the primary clock is applied to the CLKIN input, and PCI_SYNC_IN period depends on the value of CFG_CLKIN_DIV. See the *MPC8349E PowerQUICC™ II Pro Integrated Host Processor Family Reference Manual*.
2. t_{CLKIN} is the clock period of the input clock applied to CLKIN. It is valid only in PCI host mode. See the *MPC8349E PowerQUICC™ II Pro Integrated Host Processor Family Reference Manual*.
3. POR configuration signals consist of CFG_RESET_SOURCE[0:2] and CFG_CLKIN_DIV.

Table 10 lists the PLL and DLL lock times.

Table 10. PLL and DLL Lock Times

Parameter/Condition	Min	Max	Unit	Notes
PLL lock times	—	100	µs	
DLL lock times	7680	122,880	csb_clk cycles	1, 2

Notes:

1. DLL lock times are a function of the ratio between the output clock and the coherency system bus clock (csb_clk). A 2:1 ratio results in the minimum and an 8:1 ratio results in the maximum.
2. The csb_clk is determined by the CLKIN and system PLL ratio. See Section 19, “Clocking.”

6 DDR SDRAM

This section describes the DC and AC electrical specifications for the DDR SDRAM interface of the MPC8347E.

NOTE

The information in this document is accurate for revision 1.1 silicon and earlier. For information on revision 3.0 silicon and earlier versions see the *MPC8347EA PowerQUICC™ II Pro Integrated Host Processor Hardware Specifications.* See Section 23.1, "Part Numbers Fully Addressed by This Document," for silicon revision level determination.

6.1 DDR SDRAM DC Electrical Characteristics

Table 11 provides the recommended operating conditions for the DDR SDRAM component(s) of the MPC8347E.

Table 11. DDR SDRAM DC Electrical Characteristics

Parameter/Condition	Symbol	Min	Max	Unit	Notes
I/O supply voltage	GV_{DD}	2.375	2.625	V	1
I/O reference voltage	MV_{REF}	$0.49 \times GV_{DD}$	$0.51 \times GV_{DD}$	V	2
I/O termination voltage	V_{TT}	$MV_{REF} - 0.04$	$MV_{REF} + 0.04$	V	3
Input high voltage	V_{IH}	$MV_{REF} + 0.18$	$GV_{DD} + 0.3$	V	
Input low voltage	V_{IL}	–0.3	$MV_{REF} - 0.18$	V	
Output leakage current	I_{OZ}	–10	10	µA	4
Output high current (V_{OUT} = 1.95 V)	I_{OH}	–15.2	—	mA	
Output low current (V_{OUT} = 0.35 V)	I_{OL}	15.2	—	mA	
MV_{REF} input leakage current	I_{VREF}	—	5	µA	

Notes:
1. GV_{DD} is expected to be within 50 mV of the DRAM GV_{DD} at all times.
2. MV_{REF} is expected to be equal to $0.5 \times GV_{DD}$, and to track GV_{DD} DC variations as measured at the receiver. Peak-to-peak noise on MV_{REF} may not exceed ±2% of the DC value.
3. V_{TT} is not applied directly to the device. It is the supply to which far end signal termination is made and is expected to be equal to MV_{REF}. This rail should track variations in the DC level of MV_{REF}.
4. Output leakage is measured with all outputs disabled, $0 V \le V_{OUT} \le GV_{DD}$.

Table 12 provides the DDR capacitance.

Table 12. DDR SDRAM Capacitance

Parameter/Condition	Symbol	Min	Max	Unit	Notes
Input/output capacitance: DQ, DQS	C_{IO}	6	8	pF	1
Delta input/output capacitance: DQ, DQS	C_{DIO}	—	0.5	pF	1

Note:
1. This parameter is sampled. GV_{DD} = 2.5 V ± 0.125 V, f = 1 MHz, T_A = 25°C, $V_{OUT} = GV_{DD}/2$, V_{OUT} (peak-to-peak) = 0.2 V.

6.2 DDR SDRAM AC Electrical Characteristics

This section provides the AC electrical characteristics for the DDR SDRAM interface.

6.2.1 DDR SDRAM Input AC Timing Specifications

Table 13 provides the input AC timing specifications for the DDR SDRAM interface.

Table 13. DDR SDRAM Input AC Timing Specifications

At recommended operating conditions with GV_{DD} of 2.5 V ± 5%.

Parameter	Symbol	Min	Max	Unit	Notes
AC input low voltage	V_{IL}	—	MV_{REF} – 0.31	V	
AC input high voltage	V_{IH}	MV_{REF} + 0.31	GV_{DD} + 0.3	V	
MDQS—MDQ/MECC input skew per byte 333 MHz 266 MHz	t_{DISKEW}	—	 750 1125	ps	1

Note:

1. Maximum possible skew between a data strobe (MDQS[n]) and any corresponding bit of data (MDQ[8n + {0...7}] if 0 <= n <= 7) or ECC (MECC[{0...7}] if n = 8).

Figure 4 illustrates the DDR input timing diagram showing the t_{DISKEW} timing parameter.

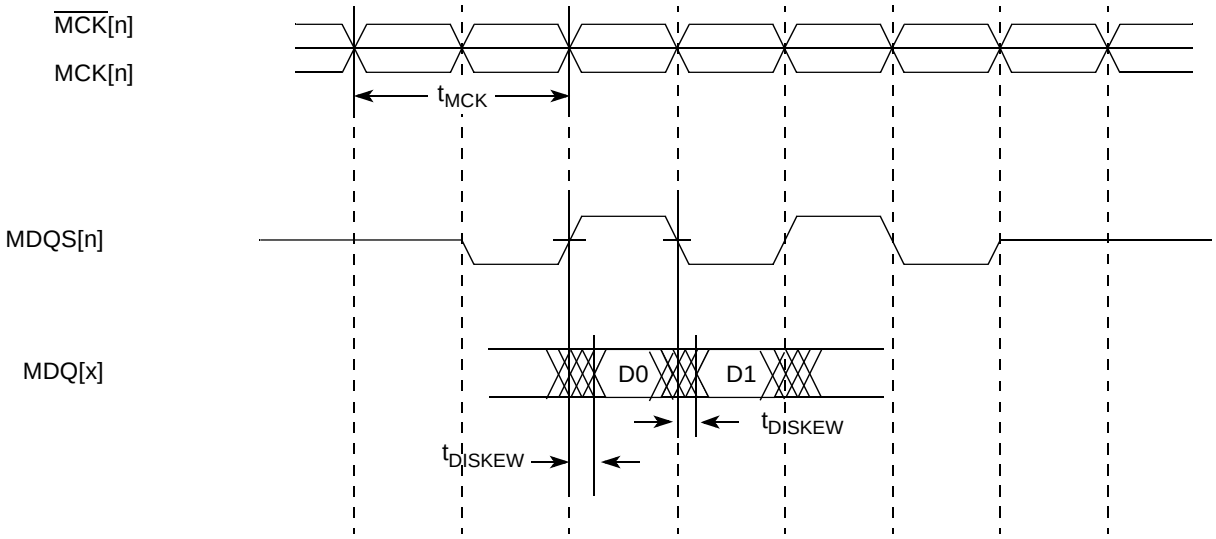

Figure 4. DDR Input Timing Diagram

6.2.2 DDR SDRAM Output AC Timing Specifications

Table 14 and Table 15 provide the output AC timing specifications and measurement conditions for the DDR SDRAM interface.

Table 14. DDR SDRAM Output AC Timing Specifications for Source Synchronous Mode

At recommended operating conditions with GV_{DD} of 2.5 V ± 5%.

Parameter	Symbol[1]	Min	Max	Unit	Notes
MCK[n] cycle time, (MCK[n]/$\overline{\text{MCK}}$[n] crossing)	t_{MCK}	6	10	ns	2
Skew between any MCK to ADDR/CMD 333 MHz 266 MHz 200 MHz	t_{AOSKEW}	 –1000 –1100 –1200	 200 300 400	ps	3
ADDR/CMD output setup with respect to MCK 333 MHz 266 MHz 200 MHz	t_{DDKHAS}	 2.8 3.45 4.6	—	ns	4
ADDR/CMD output hold with respect to MCK 333 MHz 266 MHz 200 MHz	t_{DDKHAX}	 2.0 2.65 3.8	—	ns	4
$\overline{\text{MCS}}$(n) output setup with respect to MCK 333 MHz 266 MHz 200 MHz	t_{DDKHCS}	 2.8 3.45 4.6	—	ns	4
$\overline{\text{MCS}}$(n) output hold with respect to MCK 333 MHz 266 MHz 200 MHz	t_{DDKHCX}	 2.0 2.65 3.8	—	ns	4
MCK to MDQS 333 MHz 266 MHz 200 MHz	t_{DDKHMH}	 –0.9 –1.1 –1.2	 0.3 0.5 0.6	ns	5
MDQ/MECC/MDM output setup with respect to MDQS 333 MHz 266 MHz 200 MHz	t_{DDKHDS}, t_{DDKLDS}	 900 900 1200	—	ps	6
MDQ/MECC/MDM output hold with respect to MDQS 333 MHz 266 MHz 200 MHz	t_{DDKHDX}, t_{DDKLDX}	 900 900 1200	—	ps	6
MDQS preamble start	t_{DDKHMP}	$-0.25 \times t_{MCK} - 0.9$	$-0.25 \times t_{MCK} + 0.3$	ns	7

Table 14. DDR SDRAM Output AC Timing Specifications for Source Synchronous Mode (continued)

At recommended operating conditions with GV_{DD} of 2.5 V ± 5%.

Parameter	Symbol[1]	Min	Max	Unit	Notes
MDQS epilogue end	t_{DDKLME}	-0.9	0.3	ns	7

Notes:

1. The symbols used for timing specifications follow the pattern of $t_{\text{(first two letters of functional block)(signal)(state)(reference)(state)}}$ for inputs and $t_{\text{(first two letters of functional block)(reference)(state)(signal)(state)}}$ for outputs. Output hold time can be read as DDR timing (DD) from the rising or falling edge of the reference clock (KH or KL) until the output went invalid (AX or DX). For example, t_{DDKHAS} symbolizes DDR timing (DD) for the time t_{MCK} memory clock reference (K) goes from the high (H) state until outputs (A) are setup (S) or output valid time. Also, t_{DDKLDX} symbolizes DDR timing (DD) for the time t_{MCK} memory clock reference (K) goes low (L) until data outputs (D) are invalid (X) or data output hold time.
2. All MCK/$\overline{\text{MCK}}$ referenced measurements are made from the crossing of the two signals ±0.1 V.
3. In the source synchronous mode, MCK/$\overline{\text{MCK}}$ can be shifted in 1/4 applied cycle increments through the clock control register. For the skew measurements referenced for t_{AOSKEW} it is assumed that the clock adjustment is set to align the address/command valid with the rising edge of MCK.
4. ADDR/CMD includes all DDR SDRAM output signals except MCK/$\overline{\text{MCK}}$, $\overline{\text{MCS}}$, and MDQ/MECC/MDM/MDQS. For the ADDR/CMD setup and hold specifications, it is assumed that the clock control register is set to adjust the memory clocks by 1/2 applied cycle.
5. Note that t_{DDKHMH} follows the symbol conventions described in note 1. For example, t_{DDKHMH} describes the DDR timing (DD) from the rising edge of the MCK(n) clock (KH) until the MDQS signal is valid (MH). t_{DDKHMH} can be modified through control of the DQSS override bits in the TIMING_CFG_2 register. In source synchronous mode, this will typically be set to the same delay as the clock adjust in the CLK_CNTL register. The timing parameters listed in the table assume that these 2 parameters have been set to the same adjustment value. See the *MPC8349E PowerQUICC™ II Pro Integrated Host Processor Family Reference Manual*, for a description and understanding of the timing modifications enabled by use of these bits.
6. Determined by maximum possible skew between a data strobe (MDQS) and any corresponding bit of data (MDQ), ECC (MECC), or data mask (MDM). The data strobe should be centered inside of the data eye at the pins of the MPC8347E.
7. All outputs are referenced to the rising edge of MCK(n) at the pins of the MPC8347E. Note that t_{DDKHMP} follows the symbol conventions described in note 1.

Figure 5 shows the DDR SDRAM output timing for address skew with respect to any MCK.

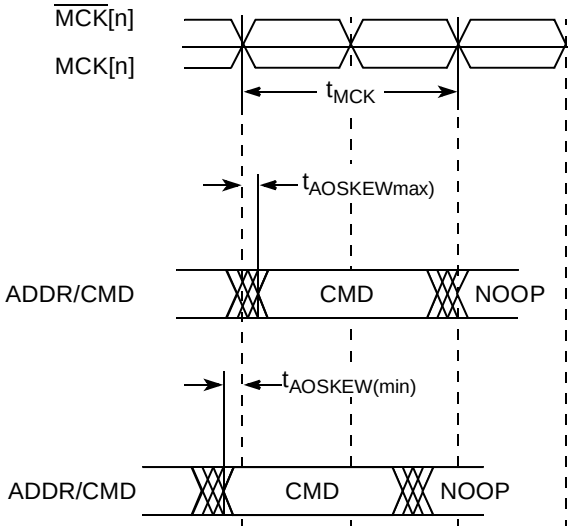

Figure 5. Timing Diagram for t_{AOSKEW} Measurement

Figure 6 provides the AC test load for the DDR bus.

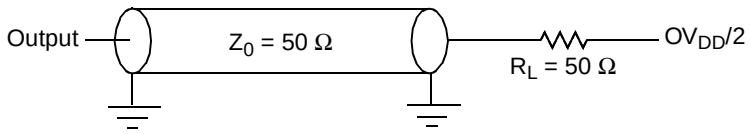

Figure 6. DDR AC Test Load

Table 15 shows the DDR SDRAM measurement conditions.

Table 15. DDR SDRAM Measurement Conditions

Symbol	DDR	Unit	Notes
V_{TH}	MV_{REF} ± 0.31 V	V	1
V_{OUT}	0.5 × GV_{DD}	V	2

Notes:
1. Data input threshold measurement point.
2. Data output measurement point.

Figure 7 shows the DDR SDRAM output timing diagram for source synchronous mode.

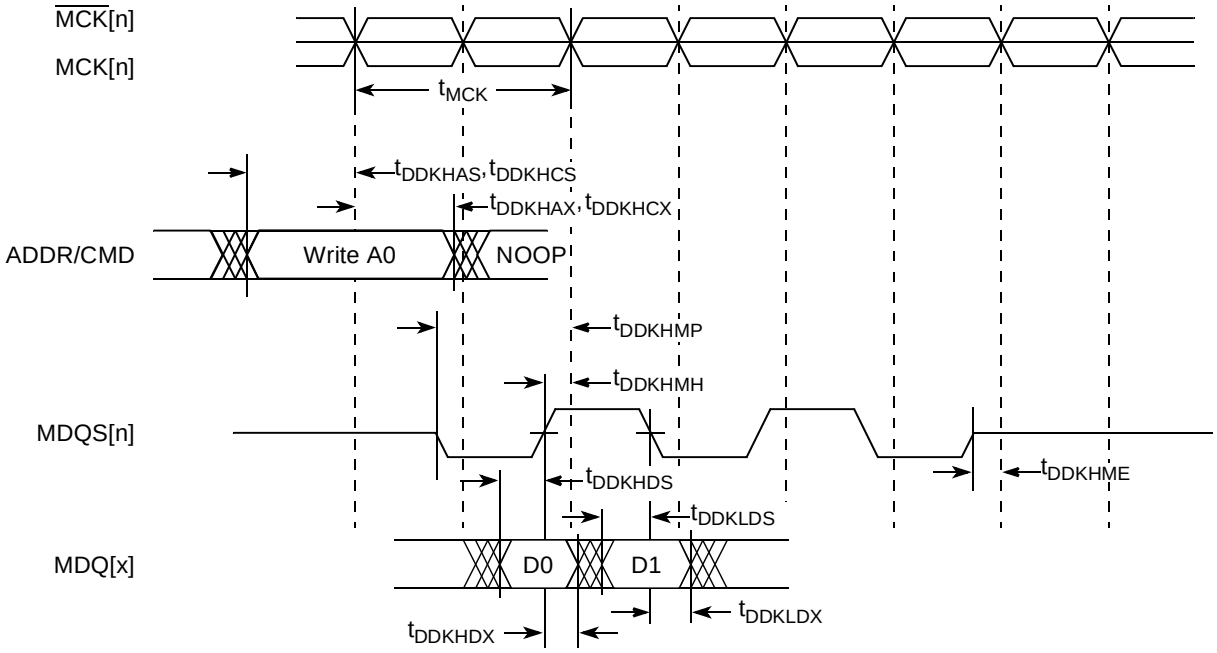

Figure 7. DDR SDRAM Output Timing Diagram for Source Synchronous Mode

Table 16 provides approximate delay information that can be expected for the address and command signals of the DDR controller for various loadings, which can be useful for a system utilizing the DLL. These numbers are the result of simulations for one topology. The delay numbers will strongly depend on the topology used. These delay numbers show the total delay for the address and command to arrive at the DRAM devices. The actual delay could be different than the delays seen in simulation, depending on the system topology. If a heavily loaded system is used, the DLL loop may need to be adjusted to meet setup requirements at the DRAM.

Table 16. Expected Delays for Address/Command

Load	Delay	Unit
4 devices (12 pF)	3.0	ns
9 devices (27 pF)	3.6	ns
36 devices (108 pF) + 40 pF compensation capacitor	5.0	ns
36 devices (108 pF) + 80 pF compensation capacitor	5.2	ns

7 DUART

This section describes the DC and AC electrical specifications for the DUART interface of the MPC8347E.

7.1 DUART DC Electrical Characteristics

Table 17 provides the DC electrical characteristics for the DUART interface of the MPC8347E.

Table 17. DUART DC Electrical Characteristics

Parameter	Symbol	Min	Max	Unit
High-level input voltage	V_{IH}	2	OV_{DD} + 0.3	V
Low-level input voltage	V_{IL}	–0.3	0.8	V
Input current (0.8 V ≤ V_{IN} ≤ 2 V)	I_{IN}	—	±5	μA
High-level output voltage, I_{OH} = –100 μA	V_{OH}	OV_{DD} – 0.2	—	V
Low-level output voltage, I_{OL} = 100 μA	V_{OL}	—	0.2	V

7.2 DUART AC Electrical Specifications

Table 18 provides the AC timing parameters for the DUART interface of the MPC8347E.

Table 18. DUART AC Timing Specifications

Parameter	Value	Unit	Notes
Minimum baud rate	256	baud	
Maximum baud rate	>1,000,000	baud	1
Oversample rate	16	—	2

Notes:
1. Actual attainable baud rate will be limited by the latency of interrupt processing.
2. The middle of a start bit is detected as the 8th sampled 0 after the 1-to-0 transition of the start bit. Subsequent bit values are sampled each 16th sample.

8 Ethernet: Three-Speed Ethernet, MII Management

This section provides the AC and DC electrical characteristics for three-speeds (10/100/1000 Mbps) and MII management.

8.1 Three-Speed Ethernet Controller (TSEC)— GMII/MII/TBI/RGMII/RTBI Electrical Characteristics

The electrical characteristics specified here apply to the gigabit media independent interface (GMII), the media independent interface (MII), ten-bit interface (TBI), reduced gigabit media independent interface (RGMII), and reduced ten-bit interface (RTBI) signals except management data input/output (MDIO) and management data clock (MDC). The MII, GMII, and TBI interfaces are defined for 3.3 V, and the RGMII and RTBI interfaces are defined for 2.5 V. The RGMII and RTBI interfaces follow the Hewlett-Packard *Reduced Pin-Count Interface for Gigabit Ethernet Physical Layer Device Specification*, Version 1.2a (9/22/2000). The electrical characteristics for MDIO and MDC are specified in Section 8.3, "Ethernet Management Interface Electrical Characteristics."

8.1.1 TSEC DC Electrical Characteristics

GMII, MII, TBI, RGMII, and RTBI drivers and receivers comply with the DC parametric attributes specified in Table 19 and Table 20. The RGMII and RTBI signals in Table 20 are based on a 2.5-V CMOS interface voltage as defined by JEDEC EIA/JESD8-5.

Table 19. GMII/TBI and MII DC Electrical Characteristics

Parameter	Symbol	Conditions		Min	Max	Unit
Supply voltage 3.3 V	LV_{DD}[2]	—		2.97	3.63	V
Output high voltage	V_{OH}	I_{OH} = –4.0 mA	LV_{DD} = Min	2.40	LV_{DD} + 0.3	V
Output low voltage	V_{OL}	I_{OL} = 4.0 mA	LV_{DD} = Min	GND	0.50	V
Input high voltage	V_{IH}	—	—	2.0	LV_{DD} + 0.3	V
Input low voltage	V_{IL}	—	—	–0.3	0.90	V
Input high current	I_{IH}	V_{IN}[1] = LV_{DD}		—	40	µA
Input low current	I_{IL}	V_{IN}[1] = GND		–600	—	µA

Notes:
1. The symbol V_{IN}, in this case, represents the LV_{IN} symbol referenced in Table 1 and Table 2.
2. GMII/MII pins not needed for RGMII or RTBI operation are powered by the OV_{DD} supply.

Table 20. RGMII/RTBI (When Operating at 2.5 V) DC Electrical Characteristics

Parameters	Symbol	Conditions		Min	Max	Unit
Supply voltage 2.5 V	LV_{DD}	—		2.37	2.63	V
Output high voltage	V_{OH}	I_{OH} = –1.0 mA	LV_{DD} = Min	2.00	LV_{DD} + 0.3	V
Output low voltage	V_{OL}	I_{OL} = 1.0 mA	LV_{DD} = Min	GND – 0.3	0.40	V
Input high voltage	V_{IH}	—	LV_{DD} = Min	1.7	LV_{DD} + 0.3	V
Input low voltage	V_{IL}	—	LV_{DD} = Min	–0.3	0.70	V
Input high current	I_{IH}	V_{IN}[1] = LV_{DD}		—	10	µA
Input low current	I_{IL}	V_{IN}[1] = GND		–15	—	µA

Note:
1. The symbol V_{IN}, in this case, represents the LV_{IN} symbol referenced in Table 1 and Table 2.

8.2 GMII, MII, TBI, RGMII, and RTBI AC Timing Specifications

The AC timing specifications for GMII, MII, TBI, RGMII, and RTBI are presented in this section.

8.2.1 GMII Timing Specifications

This section describes the GMII transmit and receive AC timing specifications.

8.2.1.1 GMII Transmit AC Timing Specifications

Table 21 provides the GMII transmit AC timing specifications.

Table 21. GMII Transmit AC Timing Specifications

At recommended operating conditions with LV_{DD}/OV_{DD} of 3.3 V ± 10%.

Parameter/Condition	Symbol[1]	Min	Typ	Max	Unit
GTX_CLK clock period	t_{GTX}	—	8.0	—	ns
GTX_CLK duty cycle	t_{GTXH}/t_{GTX}	43.75	—	56.25	%
GTX_CLK to GMII data TXD[7:0], TX_ER, TX_EN delay	t_{GTKHDX}	0.5	—	5.0	ns
GTX_CLK clock rise time, V_{IL}(min) to V_{IH}(max)	t_{GTXR}	—	—	1.0	ns
GTX_CLK clock fall time, V_{IH}(max) to V_{IL}(min)	t_{GTXF}	—	—	1.0	ns
GTX_CLK125 clock period	t_{G125}[2]	—	8.0	—	ns
GTX_CLK125 reference clock duty cycle measured at $LV_{DD}/2$	t_{G125H}/t_{G125}	45	—	55	%

Notes:
1. The symbols for timing specifications follow the pattern $t_{\text{(first two letters of functional block)(signal)(state)(reference)(state)}}$ for inputs and $t_{\text{(first two letters of functional block)(reference)(state)(signal)(state)}}$ for outputs. For example, t_{GTKHDV} symbolizes GMII transmit timing (GT) with respect to the t_{GTX} clock reference (K) going to the high state (H) relative to the time date input signals (D) reaching the valid state (V) to state or setup time. Also, t_{GTKHDX} symbolizes GMII transmit timing (GT) with respect to the t_{GTX} clock reference (K) going to the high state (H) relative to the time date input signals (D) going invalid (X) or hold time. In general, the clock reference symbol is based on three letters representing the clock of a particular function. For example, the subscript of t_{GTX} represents the GMII(G) transmit (TX) clock. For rise and fall times, the latter convention is used with the appropriate letter: R (rise) or F (fall).
2. This symbol represents the external GTX_CLK125 signal and does not follow the original symbol naming convention.

Figure 8 shows the GMII transmit AC timing diagram.

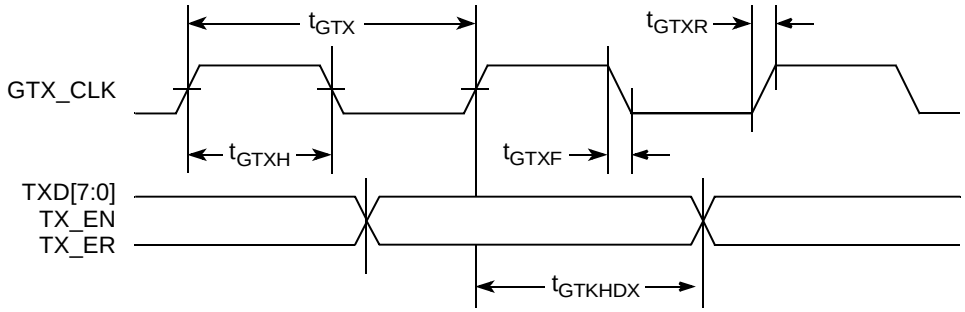

Figure 8. GMII Transmit AC Timing Diagram

8.2.1.2 GMII Receive AC Timing Specifications

Table 22 provides the GMII receive AC timing specifications.

Table 22. GMII Receive AC Timing Specifications

At recommended operating conditions with LV_{DD}/OV_{DD} of 3.3 V ± 10%.

Parameter/Condition	Symbol[1]	Min	Typ	Max	Unit
RX_CLK clock period	t_{GRX}	—	8.0	—	ns
RX_CLK duty cycle	t_{GRXH}/t_{GRX}	40	—	60	%
RXD[7:0], RX_DV, RX_ER setup time to RX_CLK	t_{GRDVKH}	2.0	—	—	ns
RXD[7:0], RX_DV, RX_ER hold time to RX_CLK	t_{GRDXKH}	0.5	—	—	ns
RX_CLK clock rise, V_{IL}(min) to V_{IH}(max)	t_{GRXR}	—	—	1.0	ns
RX_CLK clock fall time, V_{IH}(max) to V_{IL}(min)	t_{GRXF}	—	—	1.0	ns

Note:

1. The symbols for timing specifications follow the pattern of $t_{\text{(first two letters of functional block)(signal)(state)(reference)(state)}}$ for inputs and $t_{\text{(first two letters of functional block)(reference)(state)(signal)(state)}}$ for outputs. For example, t_{GRDVKH} symbolizes GMII receive timing (GR) with respect to the time data input signals (D) reaching the valid state (V) relative to the t_{RX} clock reference (K) going to the high state (H) or setup time. Also, t_{GRDXKL} symbolizes GMII receive timing (GR) with respect to the time data input signals (D) went invalid (X) relative to the t_{GRX} clock reference (K) going to the low (L) state or hold time. In general, the clock reference symbol is based on three letters representing the clock of a particular function. For example, the subscript of t_{GRX} represents the GMII (G) receive (RX) clock. For rise and fall times, the latter convention is used with the appropriate letter: R (rise) or F (fall).

Figure 9 shows the GMII receive AC timing diagram.

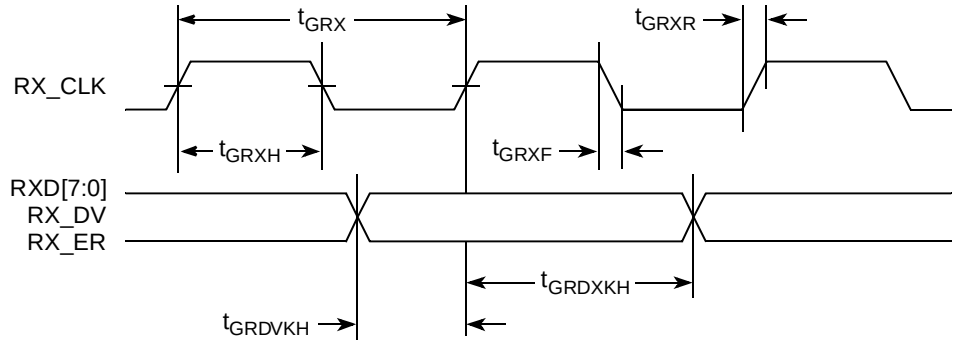

Figure 9. GMII Receive AC Timing Diagram

8.2.2 MII AC Timing Specifications

This section describes the MII transmit and receive AC timing specifications.

8.2.2.1 MII Transmit AC Timing Specifications

Table 23 provides the MII transmit AC timing specifications.

Table 23. MII Transmit AC Timing Specifications

At recommended operating conditions with LV_{DD}/OV_{DD} of 3.3 V ± 10%.

Parameter/Condition	Symbol[1]	Min	Typ	Max	Unit
TX_CLK clock period 10 Mbps	t_{MTX}	—	400	—	ns
TX_CLK clock period 100 Mbps	t_{MTX}	—	40	—	ns
TX_CLK duty cycle	t_{MTXH}/t_{MTX}	35	—	65	%
TX_CLK to MII data TXD[3:0], TX_ER, TX_EN delay	t_{MTKHDX}	1	5	15	ns
TX_CLK data clock rise V_{IL}(min) to V_{IH}(max)	t_{MTXR}	1.0	—	4.0	ns
TX_CLK data clock fall V_{IH}(max) to V_{IL}(min)	t_{MTXF}	1.0	—	4.0	ns

Note:

1. The symbols for timing specifications follow the pattern of $t_{\text{(first two letters of functional block)(signal)(state)(reference)(state)}}$ for inputs and $t_{\text{(first two letters of functional block)(reference)(state)(signal)(state)}}$ for outputs. For example, t_{MTKHDX} symbolizes MII transmit timing (MT) for the time t_{MTX} clock reference (K) going high (H) until data outputs (D) are invalid (X). In general, the clock reference symbol is based on two to three letters representing the clock of a particular function. For example, the subscript of t_{MTX} represents the MII(M) transmit (TX) clock. For rise and fall times, the latter convention is used with the appropriate letter: R (rise) or F (fall).

Figure 10 shows the MII transmit AC timing diagram.

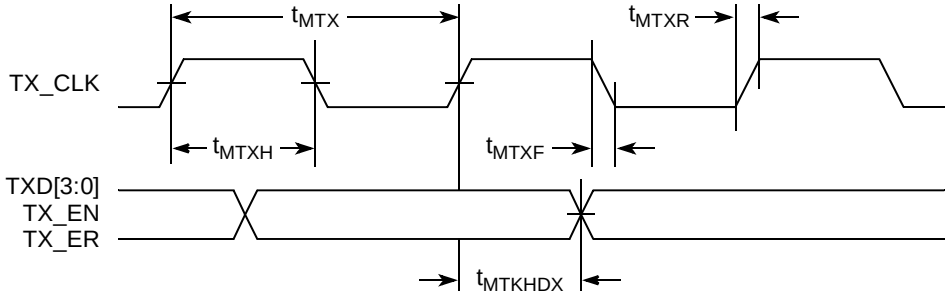

Figure 10. MII Transmit AC Timing Diagram

8.2.2.2 MII Receive AC Timing Specifications

Table 24 provides the MII receive AC timing specifications.

Table 24. MII Receive AC Timing Specifications

At recommended operating conditions with LV_{DD}/OV_{DD} of 3.3 V ± 10%.

Parameter/Condition	Symbol[1]	Min	Typ	Max	Unit
RX_CLK clock period 10 Mbps	t_{MRX}	—	400	—	ns
RX_CLK clock period 100 Mbps	t_{MRX}	—	40	—	ns
RX_CLK duty cycle	t_{MRXH}/t_{MRX}	35	—	65	%
RXD[3:0], RX_DV, RX_ER setup time to RX_CLK	t_{MRDVKH}	10.0	—	—	ns
RXD[3:0], RX_DV, RX_ER hold time to RX_CLK	t_{MRDXKH}	10.0	—	—	ns
RX_CLK clock rise V_{IL}(min) to V_{IH}(max)	t_{MRXR}	1.0	—	4.0	ns
RX_CLK clock fall time V_{IH}(max) to V_{IL}(min)	t_{MRXF}	1.0	—	4.0	ns

Note:

1. The symbols for timing specifications follow the pattern of $t_{\text{(first two letters of functional block)(signal)(state)(reference)(state)}}$ for inputs and $t_{\text{(first two letters of functional block)(reference)(state)(signal)(state)}}$ for outputs. For example, t_{MRDVKH} symbolizes MII receive timing (MR) with respect to the time data input signals (D) reach the valid state (V) relative to the t_{MRX} clock reference (K) going to the high (H) state or setup time. Also, t_{MRDXKL} symbolizes MII receive timing (GR) with respect to the time data input signals (D) went invalid (X) relative to the t_{MRX} clock reference (K) going to the low (L) state or hold time. In general, the clock reference symbol is based on three letters representing the clock of a particular functionl. For example, the subscript of t_{MRX} represents the MII (M) receive (RX) clock. For rise and fall times, the latter convention is used with the appropriate letter: R (rise) or F (fall).

Figure 11 provides the AC test load for TSEC.

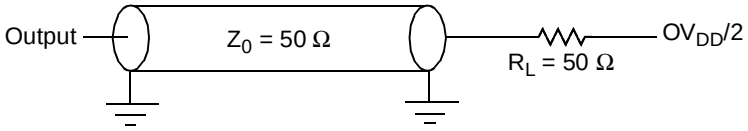

Figure 11. TSEC AC Test Load

Figure 12 shows the MII receive AC timing diagram.

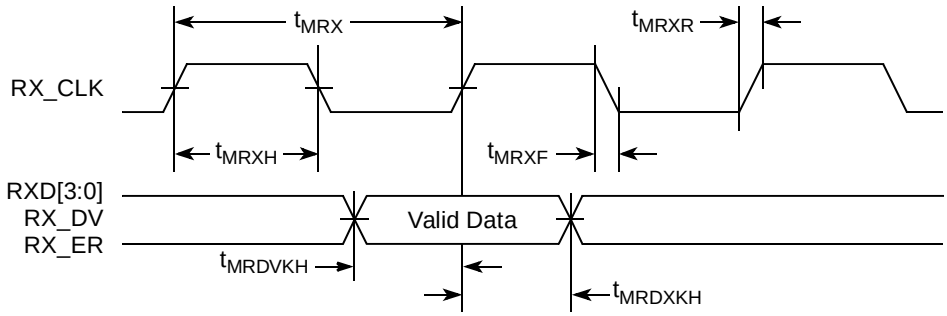

Figure 12. MII Receive AC Timing Diagram

8.2.3 TBI AC Timing Specifications

This section describes the TBI transmit and receive AC timing specifications.

8.2.3.1 TBI Transmit AC Timing Specifications

Table 25 provides the TBI transmit AC timing specifications.

Table 25. TBI Transmit AC Timing Specifications

At recommended operating conditions with LV_{DD}/OV_{DD} of 3.3 V ± 10%.

Parameter/Condition	Symbol[1]	Min	Typ	Max	Unit
GTX_CLK clock period	t_{TTX}	—	8.0	—	ns
GTX_CLK duty cycle	t_{TTXH}/t_{TTX}	40	—	60	%
GTX_CLK to TBI data TXD[7:0], TX_ER, TX_EN delay	t_{TTKHDX}	1.0	—	5.0	ns
GTX_CLK clock rise, V_{IL}(min) to V_{IH}(max)	t_{TTXR}	—	—	1.0	ns
GTX_CLK clock fall time, V_{IH}(max) to V_{IL}(min)	t_{TTXF}	—	—	1.0	ns
GTX_CLK125 reference clock period	t_{G125}[2]	—	8.0	—	ns
GTX_CLK125 reference clock duty cycle	t_{G125H}/t_{G125}	45	—	55	ns

Notes:

1. The symbols for timing specifications follow the pattern of $t_{\text{(first two letters of functional block)(signal)(state)(reference)(state)}}$ for inputs and $t_{\text{(first two letters of functional block)(reference)(state)(signal)(state)}}$ for outputs. For example, t_{TTKHDV} symbolizes the TBI transmit timing (TT) with respect to the time from t_{TTX} (K) going high (H) until the referenced data signals (D) reach the valid state (V) or setup time. Also, t_{TTKHDX} symbolizes the TBI transmit timing (TT) with respect to the time from t_{TTX} (K) going high (H) until the referenced data signals (D) reach the invalid state (X) or hold time. In general, the clock reference symbol is based on three letters representing the clock of a particular function. For example, the subscript of t_{TTX} represents the TBI (T) transmit (TX) clock. For rise and fall times, the latter convention is used with the appropriate letter: R (rise) or F (fall).
2. This symbol represents the external GTX_CLK125 and does not follow the original symbol naming convention

Figure 13 shows the TBI transmit AC timing diagram.

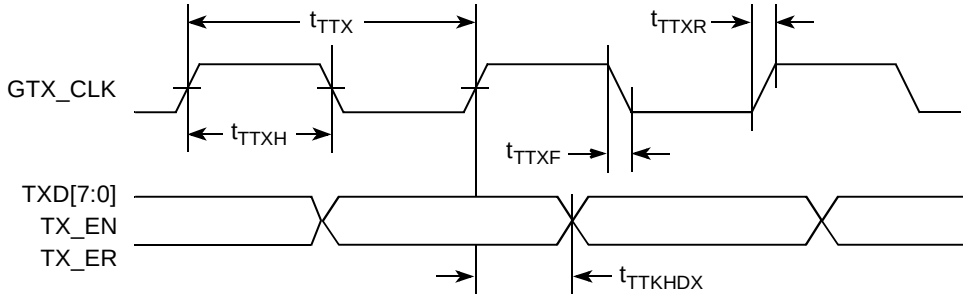

Figure 13. TBI Transmit AC Timing Diagram

8.2.3.2 TBI Receive AC Timing Specifications

Table 26 provides the TBI receive AC timing specifications.

Table 26. TBI Receive AC Timing Specifications

At recommended operating conditions with LV_{DD}/OV_{DD} of 3.3 V ± 10%.

Parameter/Condition	Symbol[1]	Min	Typ	Max	Unit
PMA_RX_CLK clock period	t_{TRX}		16.0		ns
PMA_RX_CLK skew	t_{SKTRX}	7.5	—	8.5	ns
RX_CLK duty cycle	t_{TRXH}/t_{TRX}	40	—	60	%
RXD[7:0], RX_DV, RX_ER (RCG[9:0]) setup time to rising PMA_RX_CLK	t_{TRDVKH}[2]	2.5	—	—	ns
RXD[7:0], RX_DV, RX_ER (RCG[9:0]) hold time to rising PMA_RX_CLK	t_{TRDXKH}[2]	1.5	—	—	ns
RX_CLK clock rise time V_{IL}(min) to V_{IH}(max)	t_{TRXR}	0.7	—	2.4	ns
RX_CLK clock fall time V_{IH}(max) to V_{IL}(min)	t_{TRXF}	0.7	—	2.4	ns

Notes:

1. The symbols for timing specifications follow the pattern of $t_{\text{(first two letters of functional block)(signal)(state)(reference)(state)}}$ for inputs and $t_{\text{(first two letters of functional block)(reference)(state)(signal)(state)}}$ for outputs. For example, t_{TRDVKH} symbolizes TBI receive timing (TR) with respect to the time data input signals (D) reach the valid state (V) relative to the t_{TRX} clock reference (K) going to the high (H) state or setup time. Also, t_{TRDXKH} symbolizes TBI receive timing (TR) with respect to the time data input signals (D) went invalid (X) relative to the t_{TRX} clock reference (K) going to the high (H) state. In general, the clock reference symbol is based on three letters representing the clock of a particular function. For example, the subscript of t_{TRX} represents the TBI (T) receive (RX) clock. For rise and fall times, the latter convention is used with the appropriate letter: R (rise) or F (fall). For symbols representing skews, the subscript SK followed by the clock that is being skewed (TRX).
2. Setup and hold time of even numbered RCG are measured from the riding edge of PMA_RX_CLK1. Setup and hold times of odd-numbered RCG are measured from the riding edge of PMA_RX_CLK0.

Figure 14 shows the TBI receive AC timing diagram.

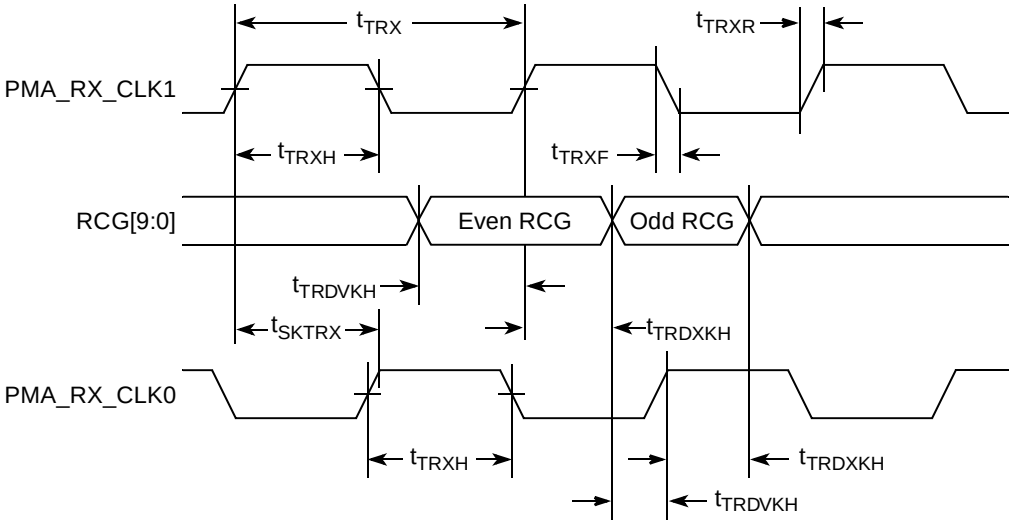

Figure 14. TBI Receive AC Timing Diagram

8.2.4 RGMII and RTBI AC Timing Specifications

Table 27 presents the RGMII and RTBI AC timing specifications.

Table 27. RGMII and RTBI AC Timing Specifications

At recommended operating conditions with LV_{DD} of 2.5 V ± 5%.

Parameter/Condition	Symbol[1]	Min	Typ	Max	Unit
Data to clock output skew (at transmitter)	t_{SKRGT}	–0.5	—	0.5	ns
Data to clock input skew (at receiver)[2]	t_{SKRGT}	1.0	—	2.8	ns
Clock cycle duration[3]	t_{RGT}	7.2	8.0	8.8	ns
Duty cycle for 1000Base-T[4, 5]	t_{RGTH}/t_{RGT}	45	50	55	%
Duty cycle for 10BASE-T and 100BASE-TX[3, 5]	t_{RGTH}/t_{RGT}	40	50	60	%
Rise time (20%–80%)	t_{RGTR}	—	—	0.75	ns
Fall time (20%–80%)	t_{RGTF}	—	—	0.75	ns
GTX_CLK125 reference clock period	t_{G12}[6]	—	8.0	—	ns
GTX_CLK125 reference clock duty cycle	t_{G125H}/t_{G125}	47	—	53	%

Notes:

1. In general, the clock reference symbol for this section is based on the symbols RGT to represent RGMII and RTBI timing. For example, the subscript of t_{RGT} represents the TBI (T) receive (RX) clock. Also, the notation for rise (R) and fall (F) times follows the clock symbol. For symbols representing skews, the subscript is SK followed by the clock being skewed (RGT).
2. This implies that PC board design requires clocks to be routed so that an additional trace delay of greater than 1.5 ns is added to the associated clock signal.
3. For 10 and 100 Mbps, t_{RGT} scales to 400 ns ± 40 ns and 40 ns ± 4 ns, respectively.
4. Duty cycle may be stretched/shrunk during speed changes or while transitioning to a received packet clock domains as long as the minimum duty cycle is not violated and stretching occurs for no more than three t_{RGT} of the lowest speed transitioned.
5. Duty cycle reference is $LV_{DD}/2$.
6. This symbol represents the external GTX_CLK125 and does not follow the original symbol naming convention.

Figure 15 shows the RBMII and RTBI AC timing and multiplexing diagrams.

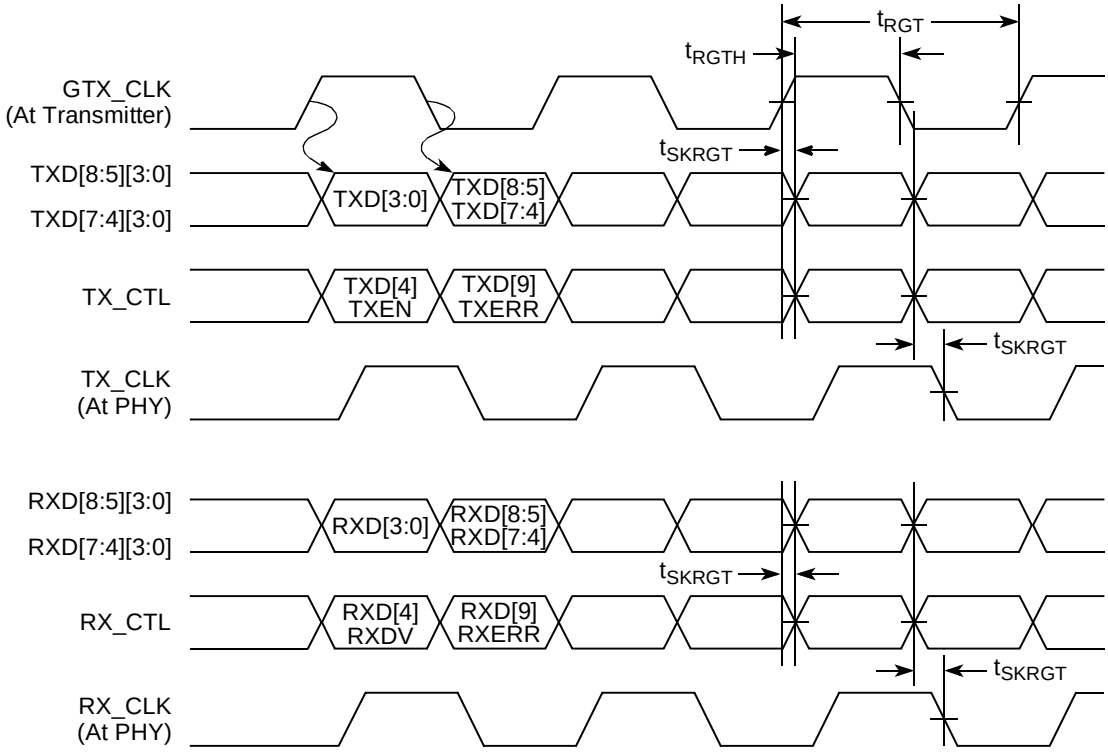

Figure 15. RGMII and RTBI AC Timing and Multiplexing Diagrams

8.3 Ethernet Management Interface Electrical Characteristics

The electrical characteristics specified here apply to the MII management interface signals management data input/output (MDIO) and management data clock (MDC). The electrical characteristics for GMII, RGMII, TBI and RTBI are specified in Section 8.1, "Three-Speed Ethernet Controller (TSEC)—GMII/MII/TBI/RGMII/RTBI Electrical Characteristics."

8.3.1 MII Management DC Electrical Characteristics

The MDC and MDIO are defined to operate at a supply voltage of 2.5 or 3.3 V. The DC electrical characteristics for MDIO and MDC are provided in Table 28 and Table 29.

Table 28. MII Management DC Electrical Characteristics Powered at 2.5 V

Parameter	Symbol	Conditions		Min	Max	Unit
Supply voltage (2.5 V)	LV_{DD}	—		2.37	2.63	V
Output high voltage	V_{OH}	I_{OH} = –1.0 mA	LV_{DD} = Min	2.00	LV_{DD} + 0.3	V
Output low voltage	V_{OL}	I_{OL} = 1.0 mA	LV_{DD} = Min	GND – 0.3	0.40	V
Input high voltage	V_{IH}	—	LV_{DD} = Min	1.7	—	V
Input low voltage	V_{IL}	—	LV_{DD} = Min	–0.3	0.70	V
Input high current	I_{IH}	V_{IN}[1] = LV_{DD}		—	10	µA
Input low current	I_{IL}	V_{IN} = LV_{DD}		–15	—	µA

Note:

1. The symbol V_{IN}, in this case, represents the LV_{IN} symbol referenced in Table 1 and Table 2.

Table 29. MII Management DC Electrical Characteristics Powered at 3.3 V

Parameter	Symbol	Conditions		Min	Max	Unit
Supply voltage (3.3 V)	LV_{DD}	—		2.97	3.63	V
Output high voltage	V_{OH}	I_{OH} = –1.0 mA	LV_{DD} = Min	2.10	LV_{DD} + 0.3	V
Output low voltage	V_{OL}	I_{OL} = 1.0 mA	LV_{DD} = Min	GND	0.50	V
Input high voltage	V_{IH}	—		2.00	—	V
Input low voltage	V_{IL}	—		—	0.80	V
Input high current	I_{IH}	LV_{DD} = Max	V_{IN}[1] = 2.1 V	—	40	µA
Input low current	I_{IL}	LV_{DD} = Max	V_{IN} = 0.5 V	–600	—	µA

Note:

1. The symbol V_{IN}, in this case, represents the LV_{IN} symbol referenced in Table 1 and Table 2.

8.3.2 MII Management AC Electrical Specifications

Table 30 provides the MII management AC timing specifications.

Table 30. MII Management AC Timing Specifications

At recommended operating conditions with LV_{DD} is 3.3 V ± 10% or 2.5 V ± 5%.

Parameter/Condition	Symbol[1]	Min	Typ	Max	Unit	Notes
MDC frequency	f_{MDC}	—	2.5	—	MHz	2
MDC period	t_{MDC}	—	400	—	ns	
MDC clock pulse width high	t_{MDCH}	32	—	—	ns	
MDC to MDIO delay	t_{MDKHDX}	10	—	170	ns	3
MDIO to MDC setup time	t_{MDDVKH}	5	—	—	ns	
MDIO to MDC hold time	t_{MDDXKH}	0	—	—	ns	
MDC rise time	t_{MDCR}	—	—	10	ns	
MDC fall time	t_{MDHF}	—	—	10	ns	

Notes:

1. The symbols for timing specifications follow the pattern of $t_{\text{(first two letters of functional block)(signal)(state)(reference)(state)}}$ for inputs and $t_{\text{(first two letters of functional block)(reference)(state)(signal)(state)}}$ for outputs. For example, t_{MDKHDX} symbolizes management data timing (MD) for the time t_{MDC} from clock reference (K) high (H) until data outputs (D) are invalid (X) or data hold time. Also, t_{MDDVKH} symbolizes management data timing (MD) with respect to the time data input signals (D) reach the valid state (V) relative to the t_{MDC} clock reference (K) going to the high (H) state or setup time. For rise and fall times, the latter convention is used with the appropriate letter: R (rise) or F (fall).
2. This parameter is dependent on the csb_clk speed (that is, for a csb_clk of 267 MHz, the maximum frequency is 8.3 MHz and the minimum frequency is 1.2 MHz; for a csb_clk of 375 MHz, the maximum frequency is 11.7 MHz and the minimum frequency is 1.7 MHz).
3. This parameter is dependent on the csb_clk speed (that is, for a csb_clk of 267 MHz, the delay is 70 ns and for a csb_clk of 333 MHz, the delay is 58 ns).

Figure 16 shows the MII management AC timing diagram.

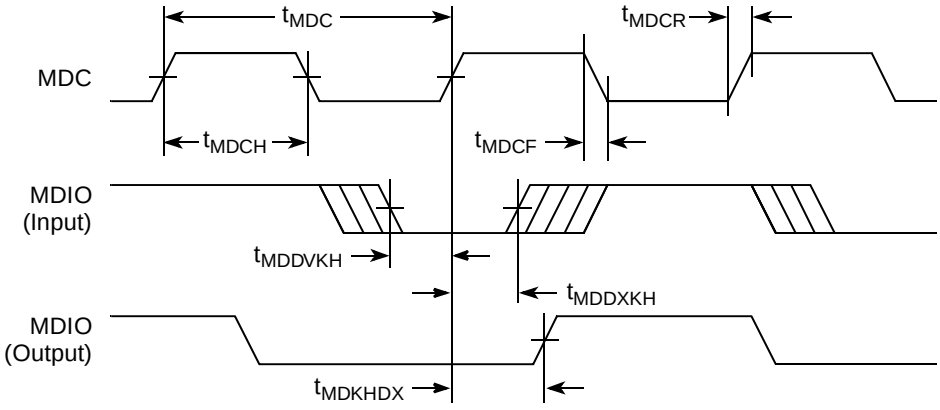

Figure 16. MII Management Interface Timing Diagram

9 USB

This section provides the AC and DC electrical specifications for the USB interface of the MPC8347E.

9.1 USB DC Electrical Characteristics

Table 31 provides the DC electrical characteristics for the USB interface.

Table 31. USB DC Electrical Characteristics

Parameter	Symbol	Min	Max	Unit
High-level input voltage	V_{IH}	2	OV_{DD} + 0.3	V
Low-level input voltage	V_{IL}	–0.3	0.8	V
Input current	I_{IN}	—	±5	μA
High-level output voltage, I_{OH} = –100 μA	V_{OH}	OV_{DD} – 0.2	—	V
Low-level output voltage, I_{OL} = 100 μA	V_{OL}	—	0.2	V

9.2 USB AC Electrical Specifications

Table 32 describes the general timing parameters of the USB interface of the MPC8347E.

Table 32. USB General Timing Parameters (ULPI Mode Only)

Parameter	Symbol[1]	Min	Max	Unit	Notes
USB clock cycle time	t_{USCK}	15	—	ns	2–5
Input setup to USB clock—all inputs	t_{USIVKH}	4	—	ns	2–5
Input hold to USB clock—all inputs	t_{USIXKH}	1	—	ns	2–5
USB clock to output valid—all outputs	t_{USKHOV}	—	7	ns	2–5
Output hold from USB clock—all outputs	t_{USKHOX}	2	—	ns	2–5

Notes:

1. The symbols for timing specifications follow the pattern of $t_{\text{(first two letters of functional block)(signal)(state)(reference)(state)}}$ for inputs and $t_{\text{(first two letters of functional block)(reference)(state)(signal)(state)}}$ for outputs. For example, t_{USIXKH} symbolizes USB timing (US) for the input (I) to go invalid (X) with respect to the time the USB clock reference (K) goes high (H). Also, t_{USKHOX} symbolizes USB timing (US) for the USB clock reference (K) to go high (H), with respect to the output (O) going invalid (X) or output hold time.
2. All timings are in reference to USB clock.
3. All signals are measured from $OV_{DD}/2$ of the rising edge of the USB clock to $0.4 \times OV_{DD}$ of the signal in question for 3.3 V signaling levels.
4. Input timings are measured at the pin.
5. For active/float timing measurements, the Hi-Z or off-state is defined to be when the total current delivered through the component pin is less than or equal to that of the leakage current specification.

Figure 17 and Figure 18 provide the AC test load and signals for the USB, respectively.

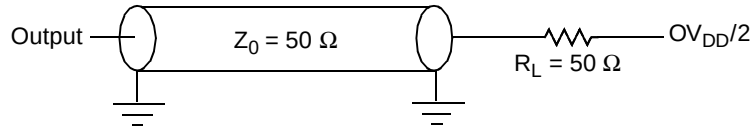

Figure 17. USB AC Test Load

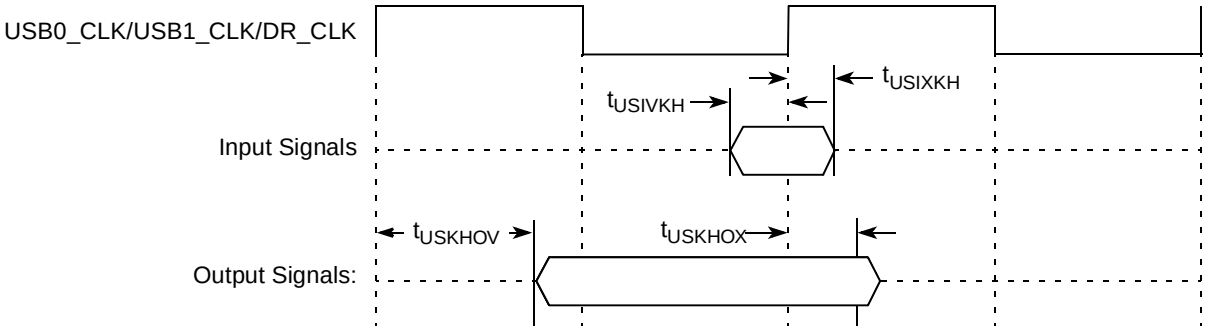

Figure 18. USB Signals

10 Local Bus

This section describes the DC and AC electrical specifications for the local bus interface of the MPC8347E.

10.1 Local Bus DC Electrical Characteristics

Table 33 provides the DC electrical characteristics for the local bus interface.

Table 33. Local Bus DC Electrical Characteristics

Parameter	Symbol	Min	Max	Unit
High-level input voltage	V_{IH}	2	OV_{DD} + 0.3	V
Low-level input voltage	V_{IL}	–0.3	0.8	V
Input current	I_{IN}	—	±5	μA
High-level output voltage, I_{OH} = –100 μA	V_{OH}	OV_{DD} – 0.2	—	V
Low-level output voltage, I_{OL} = 100 μA	V_{OL}	—	0.2	V

10.2 Local Bus AC Electrical Specification

Table 34 and Table 35 describe the general timing parameters of the local bus interface of the MPC8347E.

Table 34. Local Bus General Timing Parameters—DLL On

Parameter	Symbol[1]	Min	Max	Unit	Notes
Local bus cycle time	t_{LBK}	7.5	—	ns	2
Input setup to local bus clock (except LUPWAIT)	$t_{LBIVKH1}$	1.5	—	ns	3, 4
LUPWAIT input setup to local bus clock	$t_{LBIVKH2}$	2.2	—	ns	3, 4
Input hold from local bus clock (except LUPWAIT)	$t_{LBIXKH1}$	1.0	—	ns	3, 4
LUPWAIT Input hold from local bus clock	$t_{LBIXKH2}$	1.0	—	ns	3, 4
LALE output fall to LAD output transition (LATCH hold time)	$t_{LBOTOT1}$	1.5	—	ns	5
LALE output fall to LAD output transition (LATCH hold time)	$t_{LBOTOT2}$	3	—	ns	6
LALE output fall to LAD output transition (LATCH hold time)	$t_{LBOTOT3}$	2.5	—	ns	7
Local bus clock to LALE rise	t_{LBKHLR}	—	4.5	ns	
Local bus clock to output valid (except LAD/LDP and LALE)	$t_{LBKHOV1}$	—	4.5	ns	
Local bus clock to data valid for LAD/LDP	$t_{LBKHOV2}$	—	4.5	ns	3
Local bus clock to address valid for LAD	$t_{LBKHOV3}$	—	4.5	ns	3
Output hold from local bus clock (except LAD/LDP and LALE)	$t_{LBKHOX1}$	1	—	ns	3

Table 34. Local Bus General Timing Parameters—DLL On (continued)

Parameter	Symbol[1]	Min	Max	Unit	Notes
Output hold from local bus clock for LAD/LDP	$t_{LBKHOX2}$	1	—	ns	3
Local bus clock to output high impedance for LAD/LDP	t_{LBKHOZ}	—	3.8	ns	8

Notes:
1. The symbols for timing specifications follow the pattern of $t_{\text{(first two letters of functional block)(signal)(state)(reference)(state)}}$ for inputs and $t_{\text{(first two letters of functional block)(reference)(state)(signal)(state)}}$ for outputs. For example, $t_{LBIXKH1}$ symbolizes local bus timing (LB) for the input (I) to go invalid (X) with respect to the time the t_{LBK} clock reference (K) goes high (H), in this case for clock one (1). Also, t_{LBKHOX} symbolizes local bus timing (LB) for the t_{LBK} clock reference (K) to go high (H), with respect to the output (O) going invalid (X) or output hold time.
2. All timings are in reference to the rising edge of LSYNC_IN.
3. All signals are measured from $OV_{DD}/2$ of the rising edge of LSYNC_IN to $0.4 \times OV_{DD}$ of the signal in question for 3.3 V signaling levels.
4. Input timings are measured at the pin.
5. $t_{LBOTOT1}$ should be used when RCWH[LALE] is not set and when the load on the LALE output pin is at least 10 pF less than the load on the LAD output pins.
6. $t_{LBOTOT2}$ should be used when RCWH[LALE] is set and when the load on the LALE output pin is at least 10 pF less than the load on the LAD output pins.
7. $t_{LBOTOT3}$ should be used when RCWH[LALE] is set and when the load on the LALE output pin equals the load on the LAD output pins.
8. For active/float timing measurements, the Hi-Z or off-state is defined to be when the total current delivered through the component pin is less than or equal to that of the leakage current specification.

Table 35. Local Bus General Timing Parameters—DLL Bypass[9]

Parameter	Symbol[1]	Min	Max	Unit	Notes
Local bus cycle time	t_{LBK}	15	—	ns	2
Input setup to local bus clock	t_{LBIVKH}	7	—	ns	3, 4
Input hold from local bus clock	t_{LBIXKH}	1.0	—	ns	3, 4
LALE output fall to LAD output transition (LATCH hold time)	$t_{LBOTOT1}$	1.5	—	ns	5
LALE output fall to LAD output transition (LATCH hold time)	$t_{LBOTOT2}$	3	—	ns	6
LALE output fall to LAD output transition (LATCH hold time)	$t_{LBOTOT3}$	2.5	—	ns	7

Table 35. Local Bus General Timing Parameters—DLL Bypass[9] (continued)

Parameter	Symbol[1]	Min	Max	Unit	Notes
Local bus clock to output valid	t_{LBKLOV}	—	3	ns	3
Local bus clock to output high impedance for LAD/LDP	t_{LBKHOZ}	—	4	ns	8

Notes:

1. The symbols for timing specifications follow the pattern of $t_{\text{(first two letters of functional block)(signal)(state)(reference)(state)}}$ for inputs and $t_{\text{(first two letters of functional block)(reference)(state)(signal)(state)}}$ for outputs. For example, $t_{LBIXKH1}$ symbolizes local bus timing (LB) for the input (I) to go invalid (X) with respect to the time the t_{LBK} clock reference (K) goes high (H), in this case for clock one (1). Also, t_{LBKHOX} symbolizes local bus timing (LB) for the t_{LBK} clock reference (K) to go high (H), with respect to the output (O) going invalid (X) or output hold time.
2. All timings are in reference to the falling edge of LCLK0 (for all outputs and for $\overline{\text{LGTA}}$ and LUPWAIT inputs) or the rising edge of LCLK0 (for all other inputs).
3. All signals are measured from $OV_{DD}/2$ of the rising/falling edge of LCLK0 to $0.4 \times OV_{DD}$ of the signal in question for 3.3 V signaling levels.
4. Input timings are measured at the pin.
5. $t_{LBOTOT1}$ should be used when RCWH[LALE] is not set and when the load on the LALE output pin is at least 10 pF less than the load on the LAD output pins.
6. $t_{LBOTOT2}$ should be used when RCWH[LALE] is set and when the load on the LALE output pin is at least 10 pF less than the load on the LAD output pins.the
7. $t_{LBOTOT3}$ should be used when RCWH[LALE] is set and when the load on the LALE output pin equals to the load on the LAD output pins.
8. For purposes of active/float timing measurements, the Hi-Z or off-state is defined to be when the total current delivered through the component pin is less than or equal to the leakage current specification.
9. DLL bypass mode is not recommended for use at frequencies above 66 MHz.

Figure 19 provides the AC test load for the local bus.

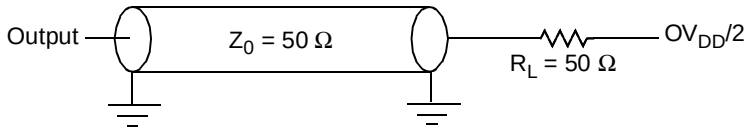

Figure 19. Local Bus C Test Load

Figure 20 through Figure 25 show the local bus signals.

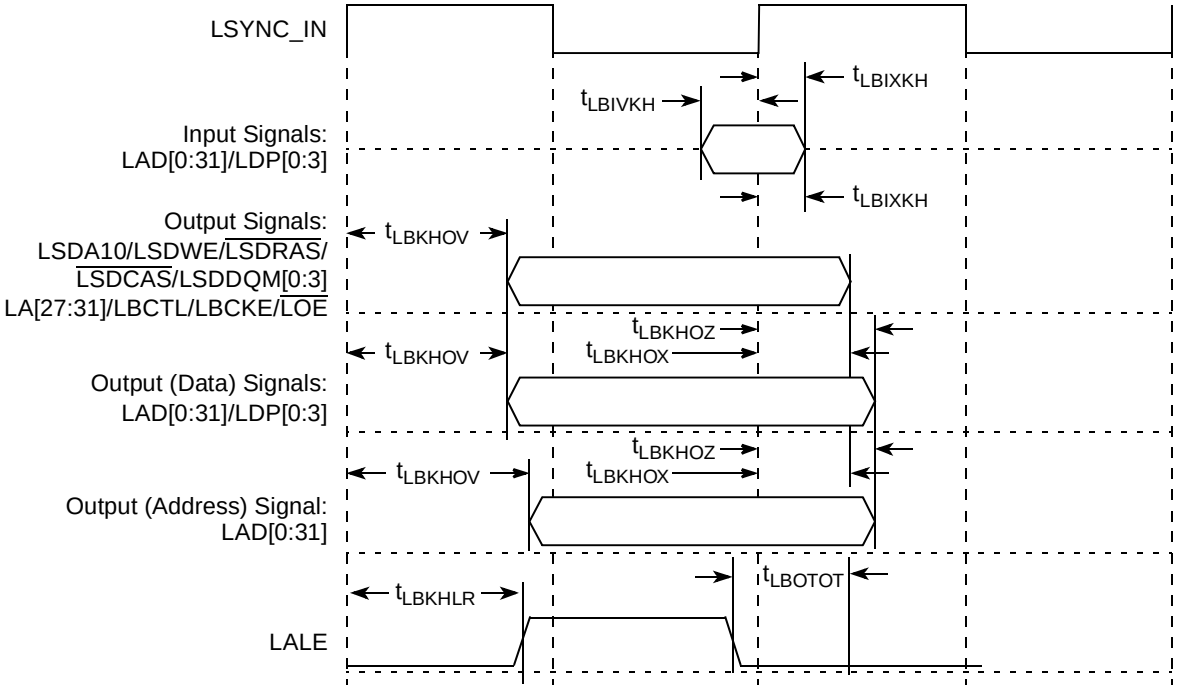

Figure 20. Local Bus Signals, Nonspecial Signals Only (DLL Enabled)

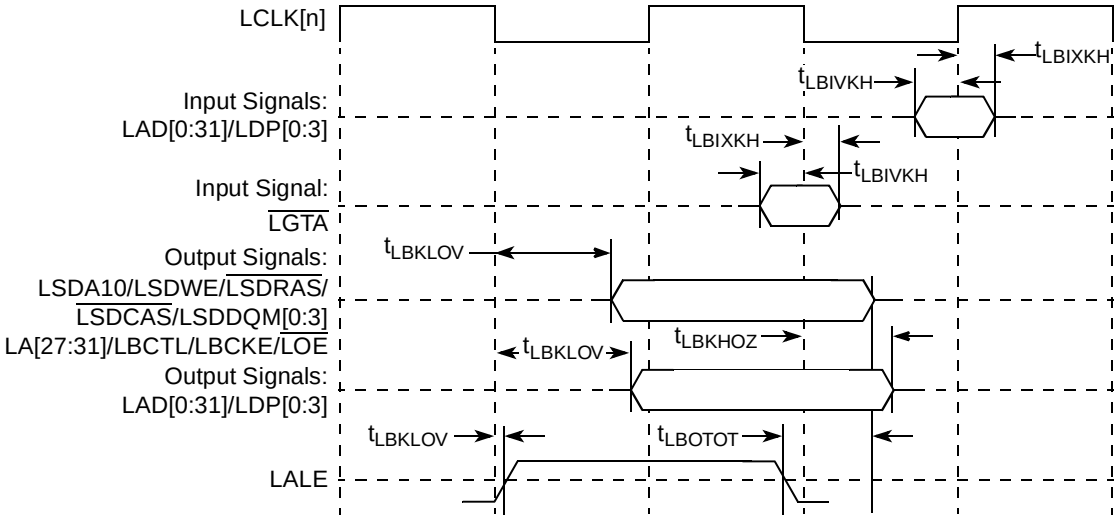

Figure 21. Local Bus Signals, Nonspecial Signals Only (DLL Bypass Mode)

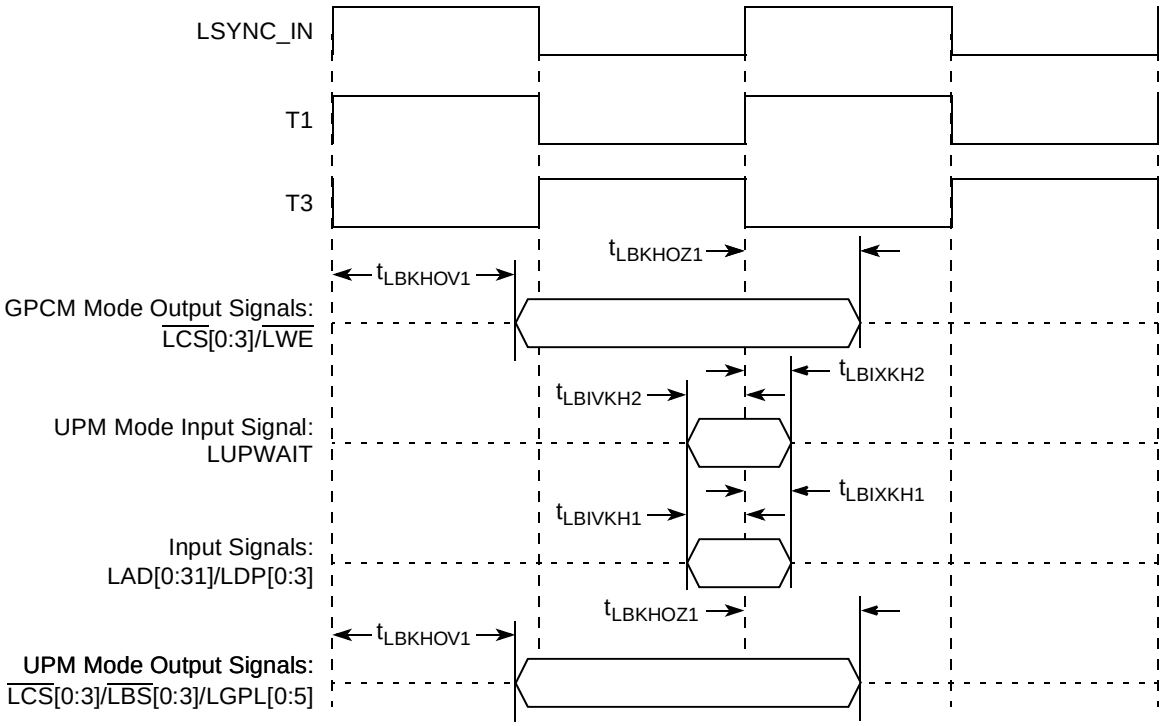

Figure 22. Local Bus Signals, GPCM/UPM Signals for LCCR[CLKDIV] = 2 (DLL Enabled)

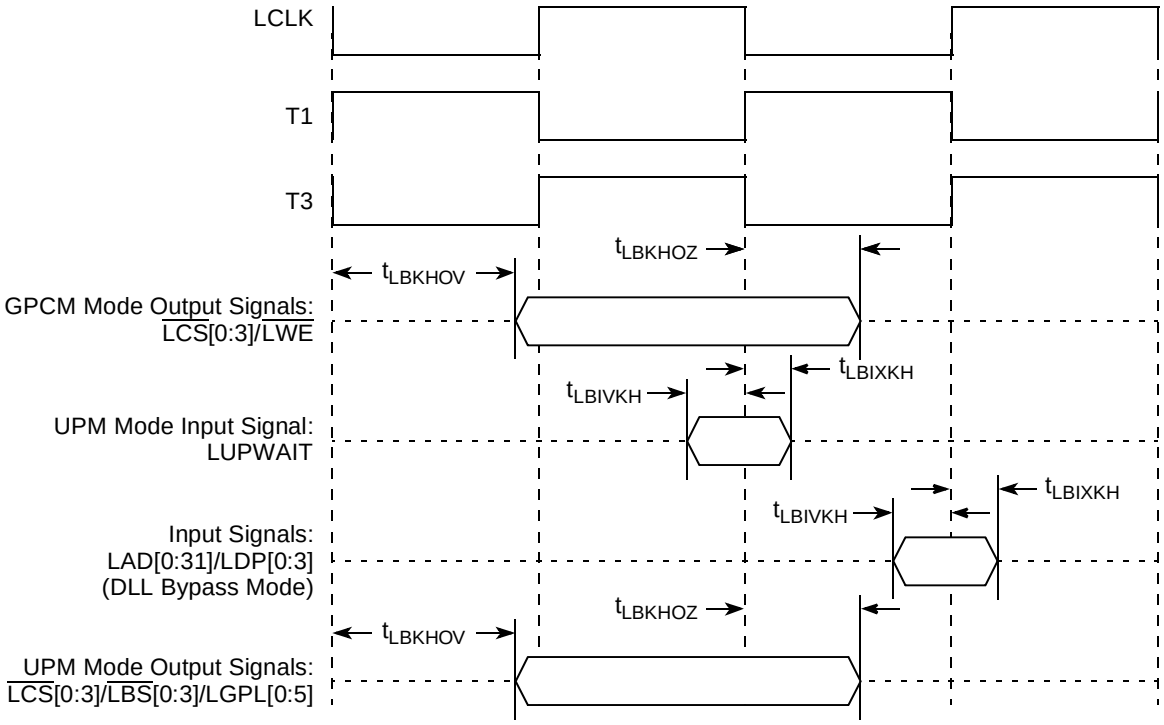

Figure 23. Local Bus Signals, GPCM/UPM Signals for LCCR[CLKDIV] = 2 (DLL Bypass Mode)

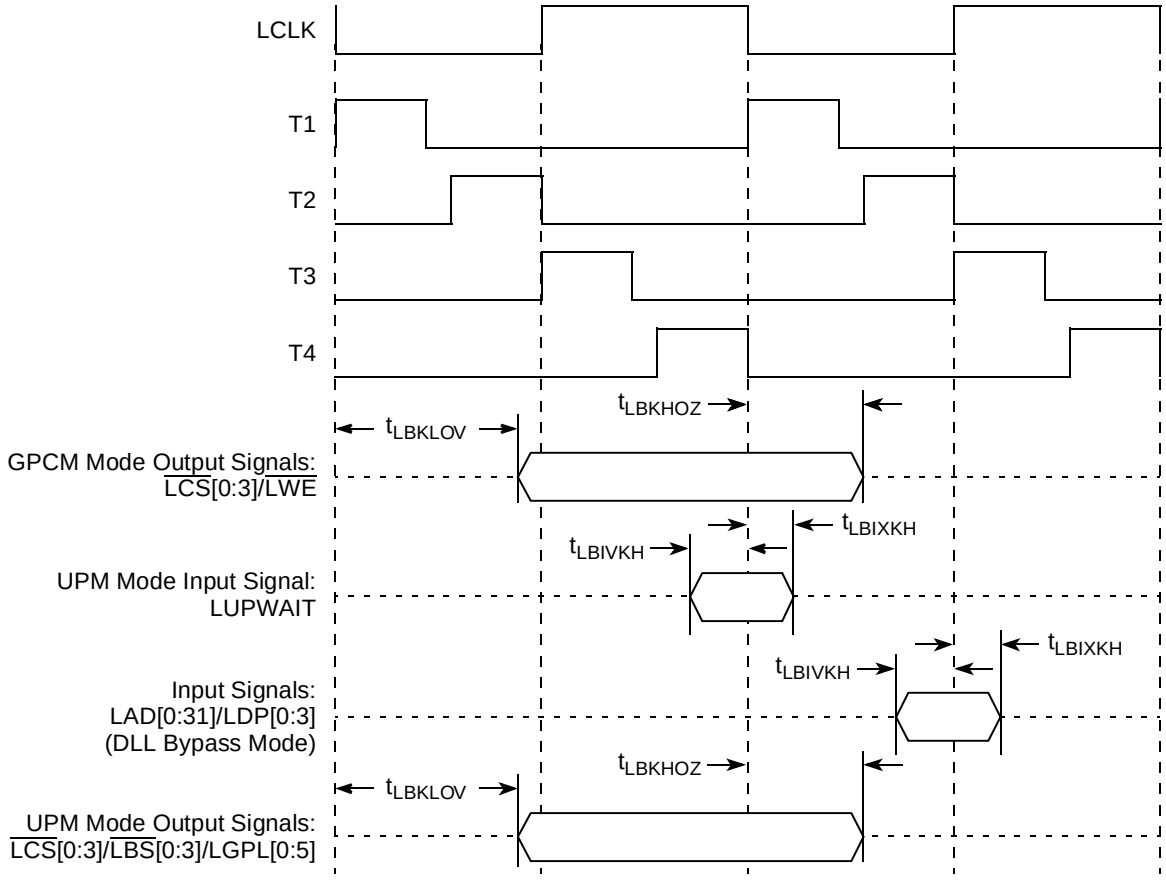

Figure 24. Local Bus Signals, GPCM/UPM Signals for LCCR[CLKDIV] = 4 (DLL Bypass Mode)

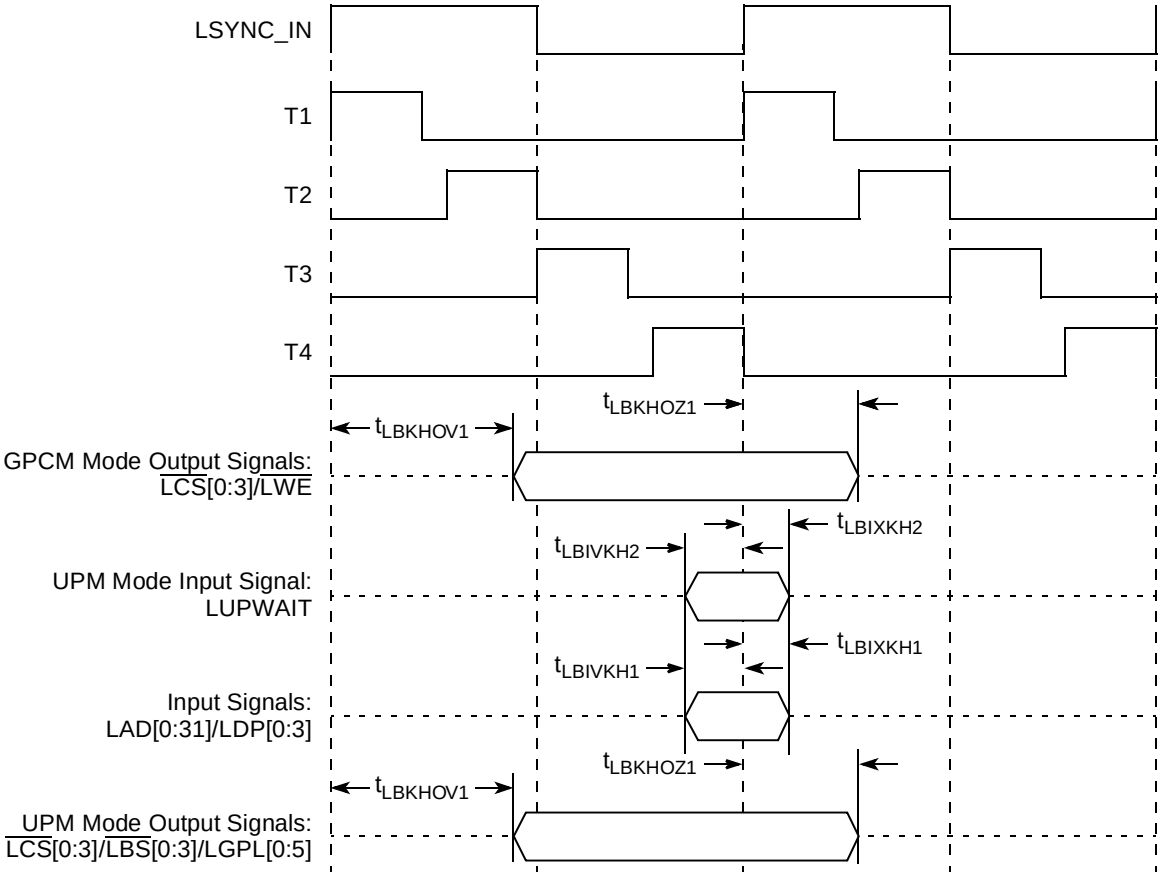

Figure 25. Local Bus Signals, GPCM/UPM Signals for LCCR[CLKDIV] = 4 (DLL Enabled)

11 JTAG

This section describes the DC and AC electrical specifications for the IEEE Std. 1149.1 (JTAG) interface of the MPC8347E

11.1 JTAG DC Electrical Characteristics

Table 36 provides the DC electrical characteristics for the IEEE Std. 1149.1 (JTAG) interface of the MPC8347E.

Table 36. JTAG interface DC Electrical Characteristics

Characteristic	Symbol	Condition	Min	Max	Unit
Input high voltage	V_{IH}		OV_{DD} – 0.3	OV_{DD} + 0.3	V
Input low voltage	V_{IL}		–0.3	0.8	V
Input current	I_{IN}			±5	μA
Output high voltage	V_{OH}	I_{OH} = –8.0 mA	2.4	—	V
Output low voltage	V_{OL}	I_{OL} = 8.0 mA	—	0.5	V
Output low voltage	V_{OL}	I_{OL} = 3.2 mA	—	0.4	V

11.2 JTAG AC Timing Specifications

This section describes the AC electrical specifications for the IEEE Std. 1149.1 (JTAG) interface of the MPC8347E. Table 37 provides the JTAG AC timing specifications as defined in Figure 27 through Figure 30.

Table 37. JTAG AC Timing Specifications (Independent of CLKIN)[1]

At recommended operating conditions (see Table 2).

Parameter	Symbol[2]	Min	Max	Unit	Notes
JTAG external clock frequency of operation	f_{JTG}	0	33.3	MHz	
JTAG external clock cycle time	t_{JTG}	30	—	ns	
JTAG external clock pulse width measured at 1.4 V	t_{JTKHKL}	15	—	ns	
JTAG external clock rise and fall times	t_{JTGR}, t_{JTGF}	0	2	ns	
$\overline{TRST}$ assert time	t_{TRST}	25	—	ns	3
Input setup times: Boundary-scan data TMS, TDI	 t_{JTDVKH} t_{JTIVKH}	 4 4	 — —	ns	4
Input hold times: Boundary-scan data TMS, TDI	 t_{JTDXKH} t_{JTIXKH}	 10 10	 — —	ns	4
Valid times: Boundary-scan data TDO	 t_{JTKLDV} t_{JTKLOV}	 2 2	 11 11	ns	5

Table 37. JTAG AC Timing Specifications (Independent of CLKIN)[1] (continued)

At recommended operating conditions (see Table 2).

Parameter	Symbol[2]	Min	Max	Unit	Notes
Output hold times: Boundary-scan data TDO	 t_{JTKLDX} t_{JTKLOX}	 2 2	 — —	ns	5
JTAG external clock to output high impedance: Boundary-scan data TDO	 t_{JTKLDZ} t_{JTKLOZ}	 2 2	 19 9	ns	5, 6

Notes:

1. All outputs are measured from the midpoint voltage of the falling/rising edge of t_{TCLK} to the midpoint of the signal in question. The output timings are measured at the pins. All output timings assume a purely resistive 50 Ω load (see Figure 26). Time-of-flight delays must be added for trace lengths, vias, and connectors in the system.
2. The symbols for timing specifications follow the pattern of $t_{\text{(first two letters of functional block)(signal)(state)(reference)(state)}}$ for inputs and $t_{\text{(first two letters of functional block)(reference)(state)(signal)(state)}}$ for outputs. For example, t_{JTDVKH} symbolizes JTAG device timing (JT) with respect to the time data input signals (D) reaching the valid state (V) relative to the t_{JTG} clock reference (K) going to the high (H) state or setup time. Also, t_{JTDXKH} symbolizes JTAG timing (JT) with respect to the time data input signals (D) went invalid (X) relative to the t_{JTG} clock reference (K) going to the high (H) state. In general, the clock reference symbol is based on three letters representing the clock of a particular function. For rise and fall times, the latter convention is used with the appropriate letter: R (rise) or F (fall).
3. $\overline{\text{TRST}}$ is an asynchronous level sensitive signal. The setup time is for test purposes only.
4. Non-JTAG signal input timing with respect to t_{TCLK}.
5. Non-JTAG signal output timing with respect to t_{TCLK}.
6. Guaranteed by design and characterization.

Figure 26 provides the AC test load for TDO and the boundary-scan outputs of the MPC8347E.

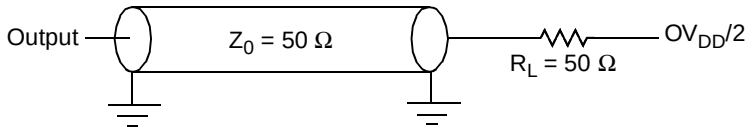

Figure 26. AC Test Load for the JTAG Interface

Figure 27 provides the JTAG clock input timing diagram.

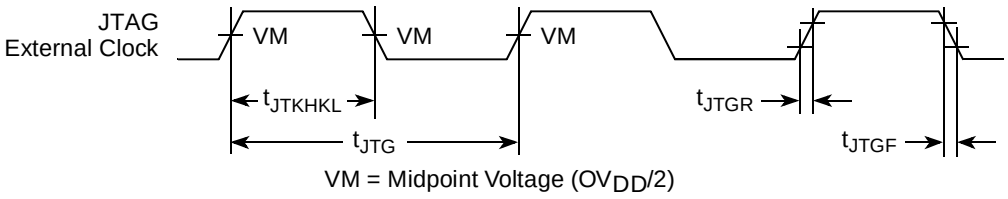

Figure 27. JTAG Clock Input Timing Diagram

Figure 28 provides the $\overline{\text{TRST}}$ timing diagram.

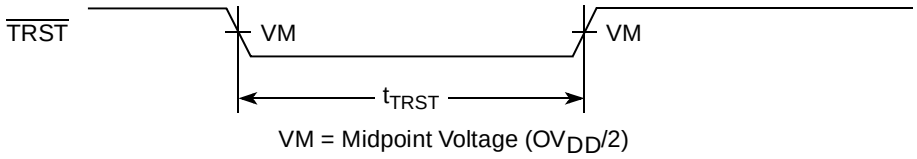

Figure 28. $\overline{\text{TRST}}$ Timing Diagram

Figure 29 provides the boundary-scan timing diagram.

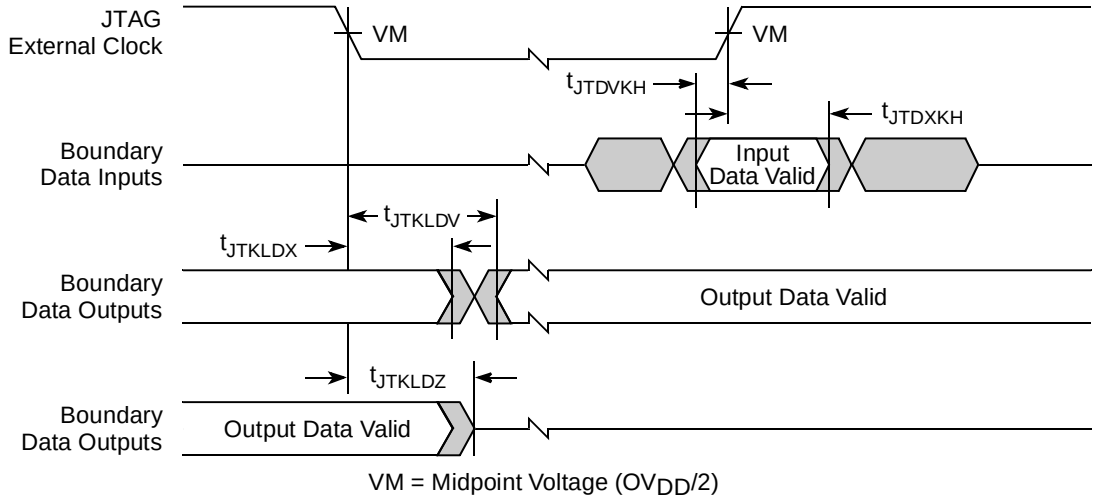

Figure 29. Boundary-Scan Timing Diagram

Figure 30 provides the test access port timing diagram.

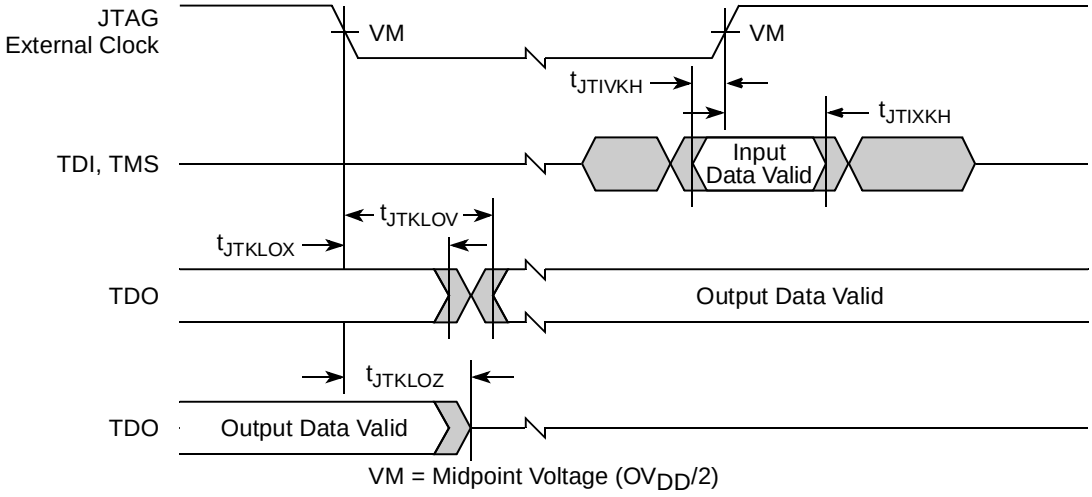

Figure 30. Test Access Port Timing Diagram

12 I²C

This section describes the DC and AC electrical characteristics for the I²C interface of the MPC8347E.

12.1 I²C DC Electrical Characteristics

Table 38 provides the DC electrical characteristics for the I²C interface of the MPC8347E.

Table 38. I²C DC Electrical Characteristics

At recommended operating conditions with OV_{DD} of 3.3 V ± 10%.

Parameter	Symbol	Min	Max	Unit	Notes
Input high voltage level	V_{IH}	$0.7 \times OV_{DD}$	$OV_{DD} + 0.3$	V	
Input low voltage level	V_{IL}	–0.3	$0.3 \times OV_{DD}$	V	
Low level output voltage	V_{OL}	0	$0.2 \times OV_{DD}$	V	1
Output fall time from V_{IH}(min) to V_{IL}(max) with a bus capacitance from 10 to 400 pF	t_{I2KLKV}	$20 + 0.1 \times C_B$	250	ns	2
Pulse width of spikes which must be suppressed by the input filter	t_{I2KHKL}	0	50	ns	3
Input current each I/O pin (input voltage is between $0.1 \times OV_{DD}$ and $0.9 \times OV_{DD}$(max)	I_I	–10	10	µA	4
Capacitance for each I/O pin	C_I	—	10	pF	

Notes:
1. Output voltage (open drain or open collector) condition = 3 mA sink current.
2. C_B = capacitance of one bus line in pF.
3. Refer to the *MPC8349E Integrated Host Processor Family Reference Manual,* for information on the digital filter used.
4. I/O pins obstruct the SDA and SCL lines if OV_{DD} is switched off.

12.2 I²C AC Electrical Specifications

Table 39 provides the AC timing parameters for the I²C interface of the MPC8347E. Note that all values refer to V_{IH}(min) and V_{IL}(max) levels (see Table 38).

Table 39. I²C AC Electrical Specifications

Parameter	Symbol[1]	Min	Max	Unit
SCL clock frequency	f_{I2C}	0	400	kHz
Low period of the SCL clock	t_{I2CL}	1.3	—	µs
High period of the SCL clock	t_{I2CH}	0.6	—	µs
Setup time for a repeated START condition	t_{I2SVKH}	0.6	—	µs
Hold time (repeated) START condition (after this period, the first clock pulse is generated)	t_{I2SXKL}	0.6	—	µs
Data setup time	t_{I2DVKH}	100	—	ns
Data hold time: CBUS compatible masters I²C bus devices	t_{I2DXKL}	— 0[2]	— 0.9[3]	µs

Table 39. I²C AC Electrical Specifications (continued)

Parameter	Symbol[1]	Min	Max	Unit
Fall time of both SDA and SCL signals[5]	t_{I2CF}	—	300	ns
Setup time for STOP condition	t_{I2PVKH}	0.6	—	µs
Bus free time between a STOP and START condition	t_{I2KHDX}	1.3	—	µs
Noise margin at the LOW level for each connected device (including hysteresis)	V_{NL}	$0.1 \times OV_{DD}$	—	V
Noise margin at the HIGH level for each connected device (including hysteresis)	V_{NH}	$0.2 \times OV_{DD}$	—	V

Notes:

1. The symbols for timing specifications follow the pattern of $t_{\text{(first two letters of functional block)(signal)(state)(reference)(state)}}$ for inputs and $t_{\text{(first two letters of functional block)(reference)(state)(signal)(state)}}$ for outputs. For example, t_{I2DVKH} symbolizes I²C timing (I2) with respect to the time data input signals (D) reach the valid state (V) relative to the t_{I2C} clock reference (K) going to the high (H) state or setup time. Also, t_{I2SXKL} symbolizes I²C timing (I2) for the time that the data with respect to the start condition (S) goes invalid (X) relative to the t_{I2C} clock reference (K) going to the low (L) state or hold time. Also, t_{I2PVKH} symbolizes I²C timing (I2) for the time that the data with respect to the stop condition (P) reaches the valid state (V) relative to the t_{I2C} clock reference (K) going to the high (H) state or setup time. For rise and fall times, the latter convention is used with the appropriate letter: R (rise) or F (fall).
2. MPC8347E provides a hold time of at least 300 ns for the SDA signal (referred to the V_{IH}(min) of the SCL signal) to bridge the undefined region of the falling edge of SCL.
3. The maximum t_{I2DVKH} must be met only if the device does not stretch the LOW period (t_{I2CL}) of the SCL signal.
4. C_B = capacitance of one bus line in pF.
5. The MPC8347E does not follow the "I2C-BUS Specifications" version 2.1 regarding the t_{I2CF} AC parameter.

Figure 31 provides the AC test load for the I²C.

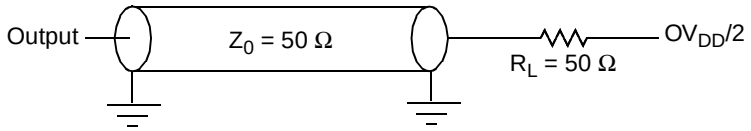

Figure 31. I²C AC Test Load

Figure 32 shows the AC timing diagram for the I²C bus.

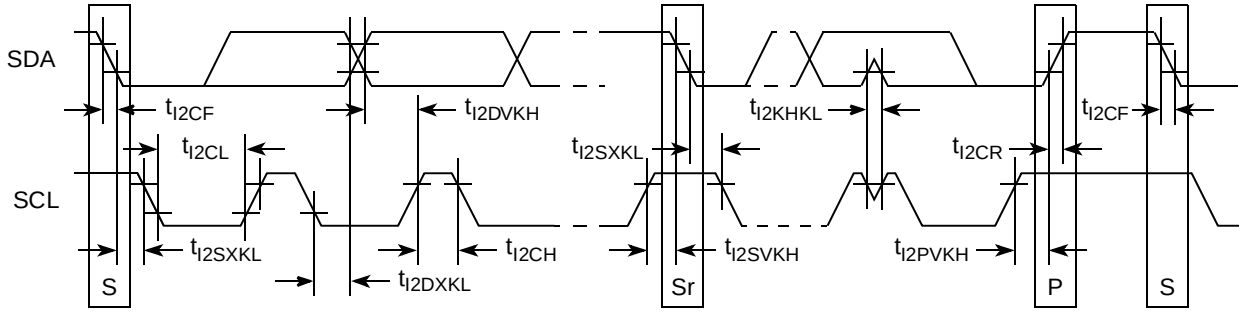

Figure 32. I²C Bus AC Timing Diagram

13 PCI

This section describes the DC and AC electrical specifications for the PCI bus of the MPC8347E.

13.1 PCI DC Electrical Characteristics

Table 40 provides the DC electrical characteristics for the PCI interface of the MPC8347E.

Table 40. PCI DC Electrical Characteristics

Parameter	Symbol	Test Condition	Min	Max	Unit
High-level input voltage	V_{IH}	$V_{OUT} \geq V_{OH}$ (min) or	2	OV_{DD} + 0.3	V
Low-level input voltage	V_{IL}	$V_{OUT} \leq V_{OL}$ (max)	–0.3	0.8	V
Input current	I_{IN}	V_{IN}[1]= 0 V or $V_{IN} = OV_{DD}$	—	±5	µA
High-level output voltage	V_{OH}	OV_{DD} = min, I_{OH} = –100 µA	OV_{DD} – 0.2	—	V
Low-level output voltage	V_{OL}	OV_{DD} = min, I_{OL} = 100 µA	—	0.2	V

Note:
1. The symbol V_{IN}, in this case, represents the OV_{IN} symbol referenced in Table 1.

13.2 PCI AC Electrical Specifications

This section describes the general AC timing parameters of the PCI bus of the MPC8347E. Note that the PCI_CLK or PCI_SYNC_IN signal is used as the PCI input clock depending on whether the MPC8347E is configured as a host or agent device. Table 41 provides the PCI AC timing specifications at 66 MHz.

Table 41. PCI AC Timing Specifications at 66 MHz[1]

Parameter	Symbol[2]	Min	Max	Unit	Notes
Clock to output valid	t_{PCKHOV}	—	6.0	ns	3
Output hold from clock	t_{PCKHOX}	1	—	ns	3
Clock to output high impedance	t_{PCKHOZ}	—	14	ns	3, 4
Input setup to clock	t_{PCIVKH}	3.0	—	ns	3, 5

Table 41. PCI AC Timing Specifications at 66 MHz[1] (continued)

Parameter	Symbol[2]	Min	Max	Unit	Notes
Input hold from clock	t_{PCIXKH}	0	—	ns	3, 5

Notes:
1. PCI timing depends on M66EN and the ratio between PCI1/PCI2. Refer to the PCI chapter of the reference manual for a description of M66EN.
2. The symbols for timing specifications follow the pattern of $t_{\text{(first two letters of functional block)(signal)(state)(reference)(state)}}$ for inputs and $t_{\text{(first two letters of functional block)(reference)(state)(signal)(state)}}$ for outputs. For example, t_{PCIVKH} symbolizes PCI timing (PC) with respect to the time the input signals (I) reach the valid state (V) relative to the PCI_SYNC_IN clock, t_{SYS}, reference (K) going to the high (H) state or setup time. Also, t_{PCRHFV} symbolizes PCI timing (PC) with respect to the time hard reset (R) went high (H) relative to the frame signal (F) going to the valid (V) state.
3. See the timing measurement conditions in the *PCI 2.2 Local Bus Specifications*.
4. For active/float timing measurements, the Hi-Z or off-state is defined to be when the total current delivered through the component pin is less than or equal to the leakage current specification.
5. Input timings are measured at the pin.

Table 42 provides the PCI AC timing specifications at 33 MHz.

Table 42. PCI AC Timing Specifications at 33 MHz

Parameter	Symbol[1]	Min	Max	Unit	Notes
Clock to output valid	t_{PCKHOV}	—	11	ns	2
Output hold from clock	t_{PCKHOX}	2	—	ns	2
Clock to output high impedance	t_{PCKHOZ}	—	14	ns	2, 3
Input setup to clock	t_{PCIVKH}	3.0	—	ns	2, 4
Input hold from clock	t_{PCIXKH}	0	—	ns	2, 4

Notes:
1. The symbols for timing specifications follow the pattern of $t_{\text{(first two letters of functional block)(signal)(state)(reference)(state)}}$ for inputs and $t_{\text{(first two letters of functional block)(reference)(state)(signal)(state)}}$ for outputs. For example, t_{PCIVKH} symbolizes PCI timing (PC) with respect to the time the input signals (I) reach the valid state (V) relative to the PCI_SYNC_IN clock, t_{SYS}, reference (K) going to the high (H) state or setup time. Also, t_{PCRHFV} symbolizes PCI timing (PC) with respect to the time hard reset (R) went high (H) relative to the frame signal (F) going to the valid (V) state.
2. See the timing measurement conditions in the *PCI 2.2 Local Bus Specifications*.
3. For active/float timing measurements, the Hi-Z or off-state is defined to be when the total current delivered through the component pin is less than or equal to the leakage current specification.
4. Input timings are measured at the pin.

Figure 33 provides the AC test load for PCI.

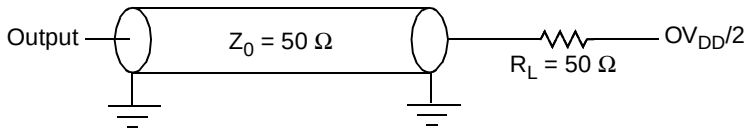

Figure 33. PCI AC Test Load

Figure 34 shows the PCI input AC timing diagram.

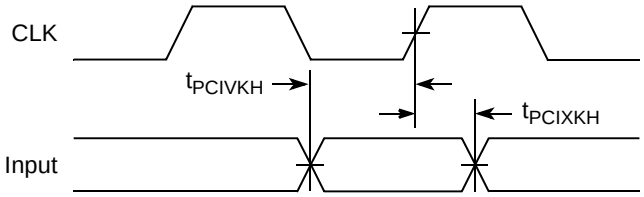

Figure 34. PCI Input AC Timing Diagram

Figure 35 shows the PCI output AC timing diagram.

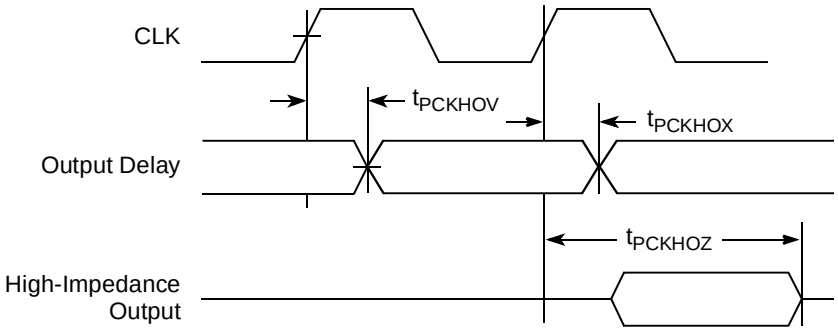

Figure 35. PCI Output AC Timing Diagram

14 Timers

This section describes the DC and AC electrical specifications for the timers.

14.1 Timer DC Electrical Characteristics

Table 43 provides the DC electrical characteristics for the MPC8347E timer pins, including TIN, $\overline{\text{TOUT}}$, $\overline{\text{TGATE}}$, and RTC_CLK.

Table 43. Timer DC Electrical Characteristics

Characteristic	Symbol	Condition	Min	Max	Unit
Input high voltage	V_{IH}		2.0	OV_{DD} + 0.3	V
Input low voltage	V_{IL}		–0.3	0.8	V
Input current	I_{IN}			±5	μA
Output high voltage	V_{OH}	I_{OH} = –8.0 mA	2.4	—	V
Output low voltage	V_{OL}	I_{OL} = 8.0 mA	—	0.5	V
Output low voltage	V_{OL}	I_{OL} = 3.2 mA	—	0.4	V

14.2 Timer AC Timing Specifications

Table 44 provides the timer input and output AC timing specifications.

Table 44. Timers Input AC Timing Specifications[1]

Characteristic	Symbol[2]	Min	Unit
Timers inputs—minimum pulse width	t_{TIWID}	20	ns

Notes:

1. Input specifications are measured from the 50 percent level of the signal to the 50 percent level of the rising edge of CLKIN. Timings are measured at the pin.
2. Timer inputs and outputs are asynchronous to any visible clock. Timer outputs should be synchronized before use by external synchronous logic. Timer inputs are required to be valid for at least t_{TIWID} ns to ensure proper operation.

15 GPIO

This section describes the DC and AC electrical specifications for the GPIO.

15.1 GPIO DC Electrical Characteristics

Table 45 provides the DC electrical characteristics for the MPC8347E GPIO.

Table 45. GPIO DC Electrical Characteristics

Characteristic	Symbol	Condition	Min	Max	Unit
Input high voltage	V_{IH}		2.0	OV_{DD} + 0.3	V
Input low voltage	V_{IL}		–0.3	0.8	V
Input current	I_{IN}			±5	μA
Output high voltage	V_{OH}	I_{OH} = –8.0 mA	2.4	—	V
Output low voltage	V_{OL}	I_{OL} = 8.0 mA	—	0.5	V
Output low voltage	V_{OL}	I_{OL} = 3.2 mA	—	0.4	V

15.2 GPIO AC Timing Specifications

Table 46 provides the GPIO input and output AC timing specifications.

Table 46. GPIO Input AC Timing Specifications[1]

Characteristic	Symbol[2]	Min	Unit
GPIO inputs—minimum pulse width	t_{PIWID}	20	ns

Notes:

1. Input specifications are measured from the 50 percent level of the signal to the 50 percent level of the rising edge of CLKIN. Timings are measured at the pin.
2. GPIO inputs and outputs are asynchronous to any visible clock. GPIO outputs should be synchronized before use by external synchronous logic. GPIO inputs must be valid for at least t_{PIWID} ns to ensure proper operation.

16 IPIC

This section describes the DC and AC electrical specifications for the external interrupt pins.

16.1 IPIC DC Electrical Characteristics

Table 47 provides the DC electrical characteristics for the external interrupt pins.

Table 47. IPIC DC Electrical Characteristics[1]

Characteristic	Symbol	Condition	Min	Max	Unit	Notes
Input high voltage	V_{IH}		2.0	OV_{DD} + 0.3	V	
Input low voltage	V_{IL}		–0.3	0.8	V	
Input current	I_{IN}			±5	μA	
Output low voltage	V_{OL}	I_{OL} = 8.0 mA	—	0.5	V	2
Output low voltage	V_{OL}	I_{OL} = 3.2 mA	—	0.4	V	2

Notes:
1. This table applies for pins $\overline{\text{IRQ}}$[0:7], $\overline{\text{IRQ_OUT}}$, and $\overline{\text{MCP_OUT}}$.
2. $\overline{\text{IRQ_OUT}}$ and $\overline{\text{MCP_OUT}}$ are open-drain pins; thus V_{OH} is not relevant for those pins.

16.2 IPIC AC Timing Specifications

Table 48 provides the IPIC input and output AC timing specifications.

Table 48. IPIC Input AC Timing Specifications[1]

Characteristic	Symbol[2]	Min	Unit
IPIC inputs—minimum pulse width	t_{PICWID}	20	ns

Notes:
1. Input specifications are measured at the 50 percent level of the IPIC input signals. Timings are measured at the pin.
2. IPIC inputs and outputs are asynchronous to any visible clock. IPIC outputs should be synchronized before use by external synchronous logic. IPIC inputs must be valid for at least t_{PICWID} ns to ensure proper operation in edge triggered mode.

17 SPI

This section describes the SPI DC and AC electrical specifications.

17.1 SPI DC Electrical Characteristics

Table 49 provides the SPI DC electrical characteristics.

Table 49. SPI DC Electrical Characteristics

Characteristic	Symbol	Condition	Min	Max	Unit
Input high voltage	V_{IH}		2.0	OV_{DD} + 0.3	V
Input low voltage	V_{IL}		–0.3	0.8	V
Input current	I_{IN}			±5	μA
Output high voltage	V_{OH}	I_{OH} = –8.0 mA	2.4	—	V
Output low voltage	V_{OL}	I_{OL} = 8.0 mA	—	0.5	V
Output low voltage	V_{OL}	I_{OL} = 3.2 mA	—	0.4	V

17.2 SPI AC Timing Specifications

Table 50 provides the SPI input and output AC timing specifications.

Table 50. SPI AC Timing Specifications[1]

Characteristic	Symbol[2]	Min	Max	Unit
SPI outputs valid—Master mode (internal clock) delay	t_{NIKHOV}		6	ns
SPI outputs hold—Master mode (internal clock) delay	t_{NIKHOX}	0.5		ns
SPI outputs valid—Slave mode (external clock) delay	t_{NEKHOV}		8	ns
SPI outputs hold—Slave mode (external clock) delay	t_{NEKHOX}	2		ns
SPI inputs—Master mode (internal clock input setup time	t_{NIIVKH}	4		ns
SPI inputs—Master mode (internal clock input hold time	t_{NIIXKH}	0		ns
SPI inputs—Slave mode (external clock) input setup time	t_{NEIVKH}	4		ns
SPI inputs—Slave mode (external clock) input hold time	t_{NEIXKH}	2		ns

Notes:

1. Output specifications are measured from the 50 percent level of the rising edge of CLKIN to the 50 percent level of the signal. Timings are measured at the pin.
2. The symbols for timing specifications follow the pattern of $t_{\text{(first two letters of functional block)(signal)(state)(reference)(state)}}$ for inputs and $t_{\text{(first two letters of functional block)(reference)(state)(signal)(state)}}$ for outputs. For example, t_{NIKHOX} symbolizes the internal timing (NI) for the time SPICLK clock reference (K) goes to the high state (H) until outputs (O) are invalid (X).

Figure 36 provides the AC test load for the SPI.

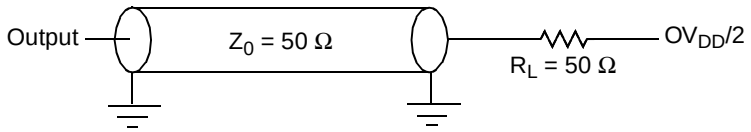

Figure 36. SPI AC Test Load

Figure 37 and Figure 38 represent the AC timings from Table 50. Note that although the specifications generally reference the rising edge of the clock, these AC timing diagrams also apply when the falling edge is the active edge.

Figure 37 shows the SPI timings in slave mode (external clock).

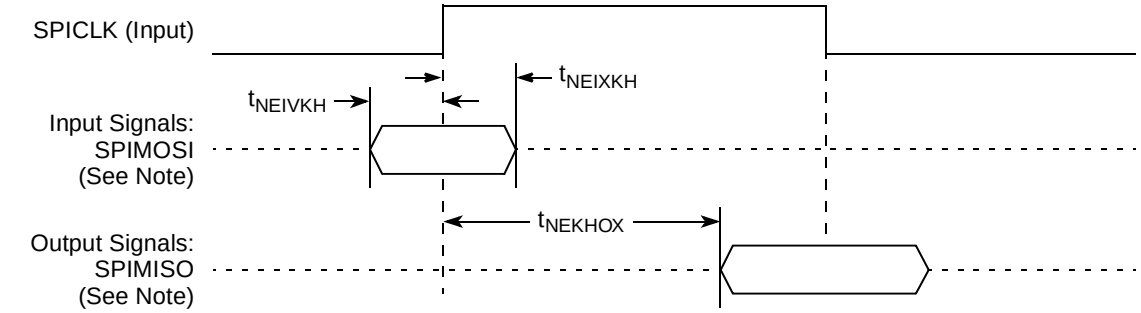

Note: The clock edge is selectable on SPI.

Figure 37. SPI AC Timing in Slave Mode (External Clock) Diagram

Figure 38 shows the SPI timings in master mode (internal clock).

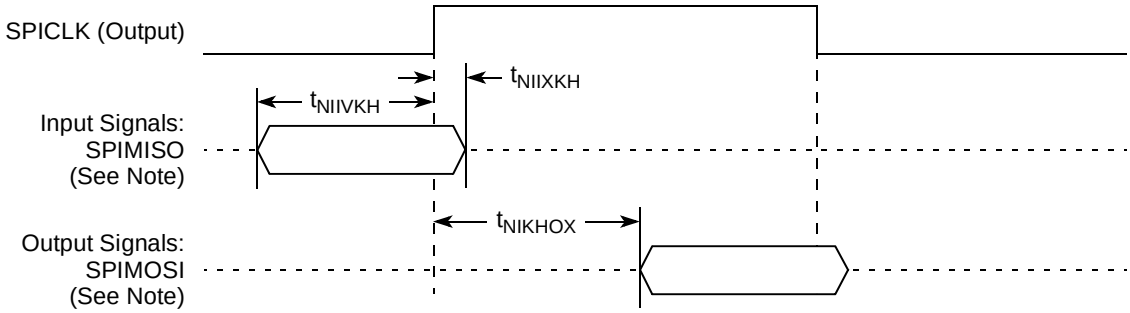

Note: The clock edge is selectable on SPI.

Figure 38. SPI AC Timing in Master Mode (Internal Clock) Diagram

18 Package and Pin Listings

This section details package parameters, pin assignments, and dimensions. The MPC8347E is available in two packages—a tape ball grid array (TBGA) and a plastic ball grid array (PBGA). See Section 18.1, "Package Parameters for the MPC8347E TBGA," Section 18.2, "Mechanical Dimensions for the MPC8347E TBGA,Section 18.3, "Package Parameters for the MPC8347E PBGA," and Section 18.4, "Mechanical Dimensions for the MPC8347E PBGA."

18.1 Package Parameters for the MPC8347E TBGA

The package parameters are provided in the following list. The package type is 35 mm × 35 mm, 672 tape ball grid array (TBGA).

Package outline	35 mm × 35 mm
Interconnects	672
Pitch	1.00 mm
Module height (typical)	1.46 mm
Solder balls	62 Sn/36 Pb/2 Ag (ZU package) 95.5 Sn/0.5 Cu/4Ag (VV package)
Ball diameter (typical)	0.64 mm

18.2 Mechanical Dimensions for the MPC8347E TBGA

Figure 39 shows the mechanical dimensions and bottom surface nomenclature for the MPC8347E, 672-TBGA package.

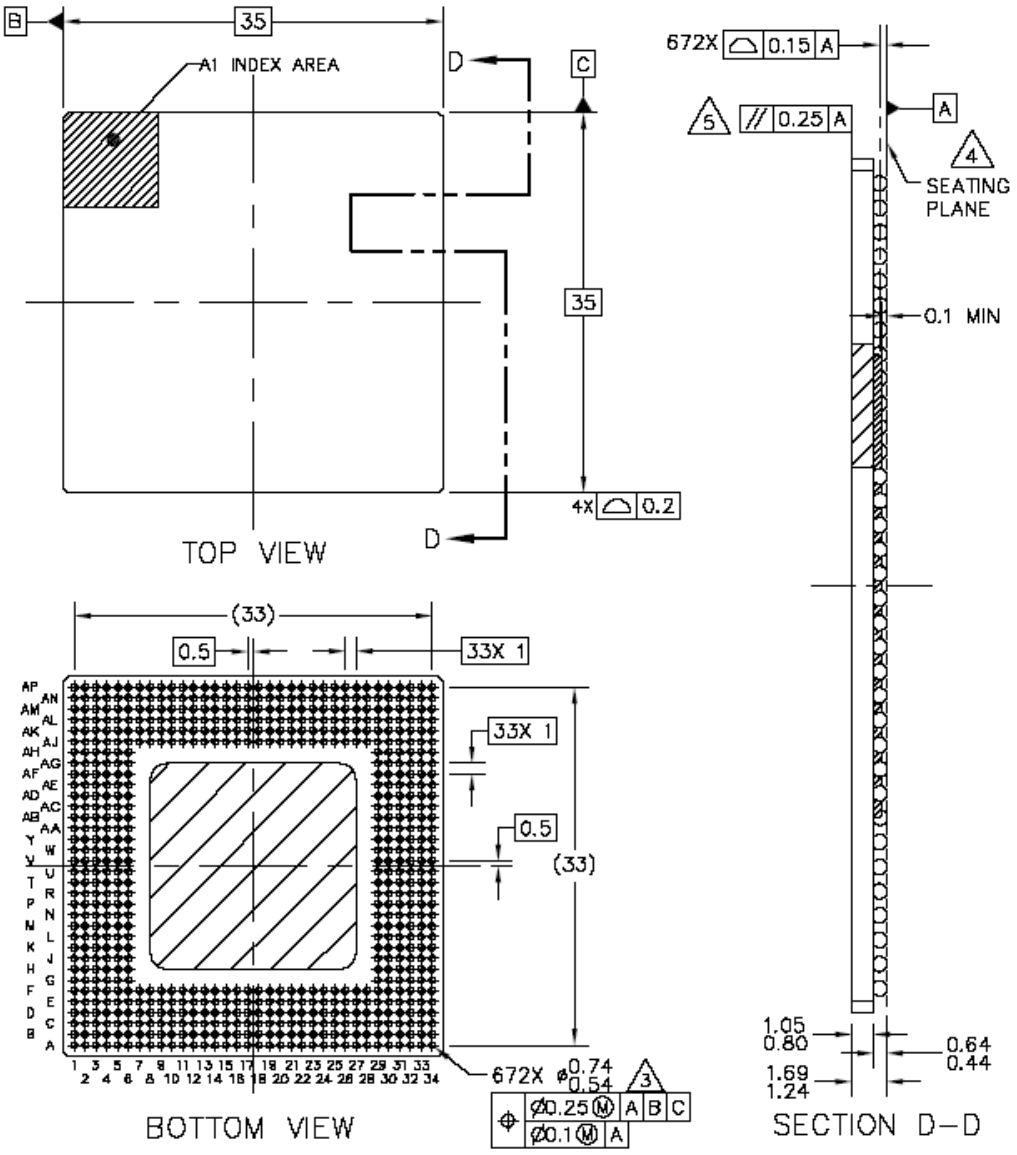

Notes:

1.All dimensions are in millimeters.

2.Dimensions and tolerances per ASME Y14.5M-1994.

3.Maximum solder ball diameter measured parallel to datum A.

4.Datum A, the seating plane, is determined by the spherical crowns of the solder balls.

5.Parallelism measurement must exclude any effect of mark on top surface of package.

Figure 39. Mechanical Dimensions and Bottom Surface Nomenclature for the MPC8347E TBGA

18.3 Package Parameters for the MPC8347E PBGA

The package parameters are as provided in the following list. The package type is 29 mm × 29 mm, 620 plastic ball grid array (PBGA).

Package outline	29 mm × 29 mm
Interconnects	620
Pitch	1.00 mm
Module height (maximum)	2.46 mm
Module height (typical)	2.23 mm
Module height (minimum)	2.00 mm
Solder balls	62 Sn/36 Pb/2 Ag (ZQ package) 95.5 Sn/0.5 Cu/4Ag (VR package)
Ball diameter (typical)	0.60 mm

18.4 Mechanical Dimensions for the MPC8347E PBGA

Figure 40 shows the mechanical dimensions and bottom surface nomenclature for the MPC8347E, 620-PBGA package.

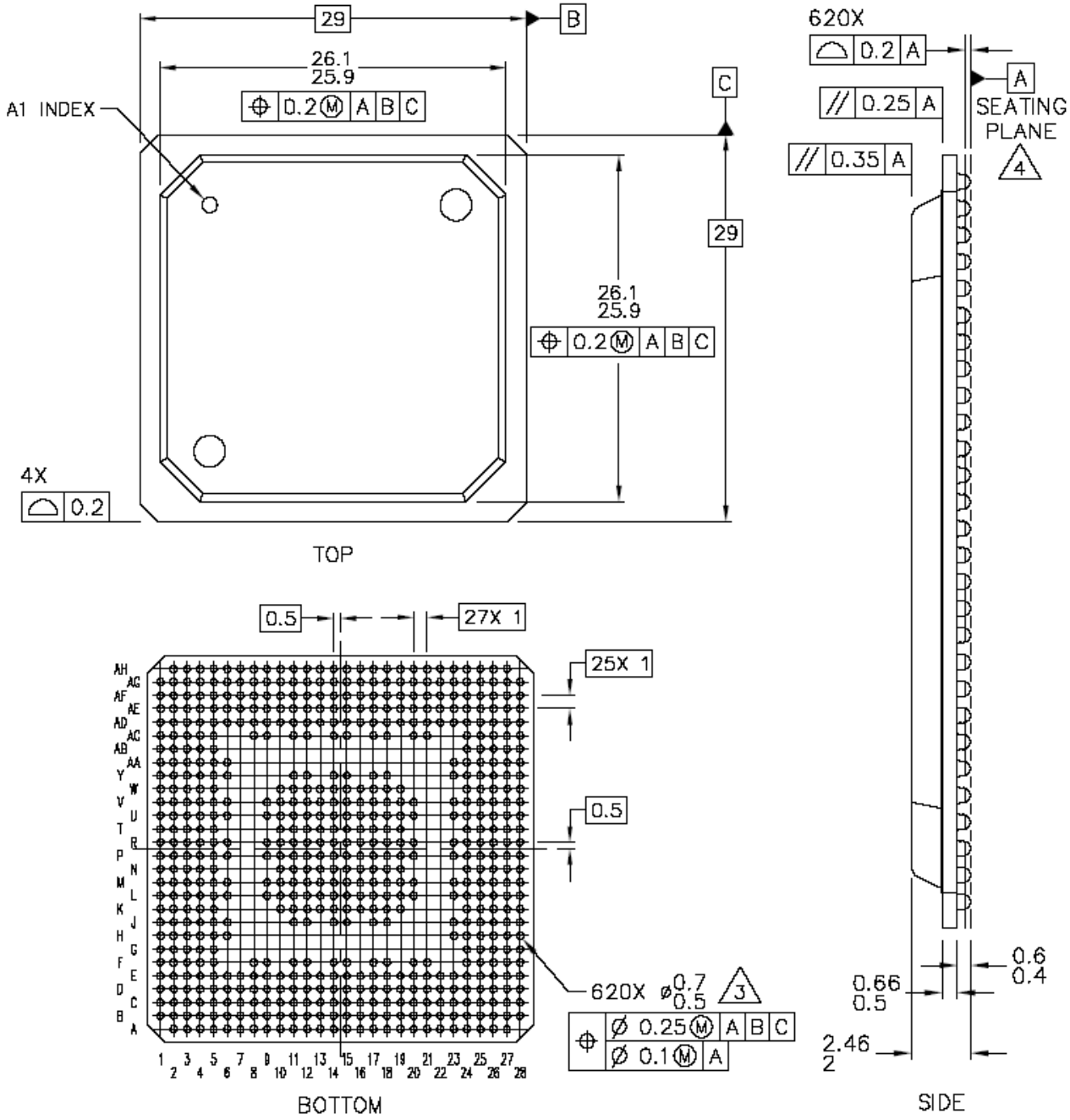

Notes:

1.All dimensions are in millimeters.

2.Dimensioning and tolerancing per ASME Y14. 5M-1994.

3.Maximum solder ball diameter measured parallel to datum A.

4.Datum A, the seating plane, is determined by the spherical crowns of the solder balls.

Figure 40. Mechanical Dimensions and Bottom Surface Nomenclature for the MPC8347E PBGA

18.5 Pinout Listings

Table 51 provides the pinout listing for the MPC8347E, 672 TBGA package.

Table 51. MPC8347E (TBGA) Pinout Listing

Signal	Package Pin Number	Pin Type	Power Supply	Notes
PCI				
PCI_INTA/IRQ_OUT	B34	O	OV_{DD}	2
PCI_RESET_OUT	C33	O	OV_{DD}	
PCI_AD[31:0]	G30, G32, G34, H31, H32, H33, H34, J29, J32, J33, L30, K31, K33, K34, L33, L34, P34, R29, R30, R33, R34, T31, T32, T33, U31, U34, V31, V32, V33, V34, W33, W34	I/O	OV_{DD}	
PCI_C/BE[3:0]	J30, M31, P33, T34	I/O	OV_{DD}	
PCI_PAR	P32	I/O	OV_{DD}	
PCI_FRAME	M32	I/O	OV_{DD}	5
PCI_TRDY	N29	I/O	OV_{DD}	5
PCI_IRDY	M34	I/O	OV_{DD}	5
PCI_STOP	N31	I/O	OV_{DD}	5
PCI_DEVSEL	N30	I/O	OV_{DD}	5
PCI_IDSEL	J31	I	OV_{DD}	
PCI_SERR	N34	I/O	OV_{DD}	5
PCI_PERR	N33	I/O	OV_{DD}	5
PCI_REQ[0]	D32	I/O	OV_{DD}	
PCI_REQ[1]/CPCI1_HS_ES	D34	I	OV_{DD}	
PCI_REQ[2:4]	E34, F32, G29	I	OV_{DD}	
PCI_GNT0	C34	I/O	OV_{DD}	
PCI_GNT1/CPCI1_HS_LED	D33	O	OV_{DD}	
PCI_GNT2/CPCI1_HS_ENUM	E33	O	OV_{DD}	
PCI_GNT[3:4]	F31, F33	O	OV_{DD}	
M66EN	A19	I	OV_{DD}	
DDR SDRAM Memory Interface				
MDQ[0:63]	D5, A3, C3, D3, C4, B3, C2, D4, D2, E5, G2, H6, E4, F3, G4, G3, H1, J2, L6, M6, H2, K6, L2, M4, N2, P4, R2, T4, P6, P3, R1, T2, AB5, AA3, AD6, AE4, AB4, AC2, AD3, AE6, AE3, AG4, AK5, AK4, AE2, AG6, AK3, AK2, AL2, AL1, AM5, AP5, AM2, AN1, AP4, AN5, AJ7, AN7, AM8, AJ9, AP6, AL7, AL9, AN8	I/O	GV_{DD}	

Table 51. MPC8347E (TBGA) Pinout Listing (continued)

Signal	Package Pin Number	Pin Type	Power Supply	Notes
MECC[0:4]/MSRCID[0:4]	W4, W3, Y3, AA6, T1	I/O	GV_{DD}	
MECC[5]/MDVAL	U1	I/O	GV_{DD}	
MECC[6:7]	Y1, Y6	I/O	GV_{DD}	
MDM[0:8]	B1, F1, K1, R4, AD4, AJ1, AP3, AP7, Y4	O	GV_{DD}	
MDQS[0:8]	B2, F5, J1, P2, AC1, AJ2, AN4, AL8, W2	I/O	GV_{DD}	
MBA[0:1]	AD1, AA5	O	GV_{DD}	
MA[0:14]	W1, U4, T3, R3, P1, M1, N1, L3, L1, K2, Y2, K3, J3, AP2, AN6	O	GV_{DD}	
$\overline{\text{MWE}}$	AF1	O	GV_{DD}	
$\overline{\text{MRAS}}$	AF4	O	GV_{DD}	
$\overline{\text{MCAS}}$	AG3	O	GV_{DD}	
$\overline{\text{MCS}}$[0:3]	AG2, AG1, AK1, AL4	O	GV_{DD}	
MCKE[0:1]	H3, G1	O	GV_{DD}	3
MCK[0:5]	U2, F4, AM3, V3, F2, AN3	O	GV_{DD}	
$\overline{\text{MCK}}$[0:5]	U3, E3, AN2, V4, E1, AM4	O	GV_{DD}	
Pins Reserved for Future DDR2 (They should be left unconnected for MPC8347)				
MODT[0:3]	AH3, AJ5, AH1, AJ4	—	—	
MBA[2]	H4	—	—	
SPARE1	AA1	—	—	8
SPARE2	AB1	—	—	6
Local Bus Controller Interface				
LAD[0:31]	AM13, AP13, AL14, AM14, AN14, AP14, AK15, AJ15, AM15, AN15, AP15, AM16, AL16, AN16, AP16, AL17, AM17, AP17, AK17, AP18, AL18, AM18, AN18, AP19, AN19, AM19, AP20, AK19, AN20, AL20, AP21, AN21	I/O	OV_{DD}	
LDP[0]/$\overline{\text{CKSTOP_OUT}}$	AM21	I/O	OV_{DD}	
LDP[1]/$\overline{\text{CKSTOP_IN}}$	AP22	I/O	OV_{DD}	
LDP[2]	AN22	I/O	OV_{DD}	
LDP[3]	AM22	I/O	OV_{DD}	
LA[27:31]	AK21, AP23, AN23, AP24, AK22	O	OV_{DD}	
$\overline{\text{LCS}}$[0:3]	AN24, AL23, AP25, AN25	O	OV_{DD}	
$\overline{\text{LWE}}$[0:3]/LSDDQM[0:3]/$\overline{\text{LBS}}$[0:3]	AK23, AP26, AL24, AM25	O	OV_{DD}	

Table 51. MPC8347E (TBGA) Pinout Listing (continued)

Signal	Package Pin Number	Pin Type	Power Supply	Notes
LBCTL	AN26	O	OV_{DD}	
LALE	AK24	O	OV_{DD}	
LGPL0/LSDA10/cfg_reset_source0	AP27	I/O	OV_{DD}	
LGPL1/$\overline{\text{LSDWE}}$/cfg_reset_source1	AL25	I/O	OV_{DD}	
LGPL2/$\overline{\text{LSDRAS}}$/$\overline{\text{LOE}}$	AJ24	O	OV_{DD}	
LGPL3/$\overline{\text{LSDCAS}}$/cfg_reset_source2	AN27	I/O	OV_{DD}	
LGPL4/$\overline{\text{LGTA}}$/LUPWAIT/LPBSE	AP28	I/O	OV_{DD}	
LGPL5/cfg_clkin_div	AL26	I/O	OV_{DD}	
LCKE	AM27	O	OV_{DD}	
LCLK[0:2]	AN28, AK26, AP29	O	OV_{DD}	
LSYNC_OUT	AM12	O	OV_{DD}	
LSYNC_IN	AJ10	I	OV_{DD}	
General Purpose I/O Timers				
GPIO1[0]/GTM1_TIN1/GTM2_TIN2	F24	I/O	OV_{DD}	
GPIO1[1]/$\overline{\text{GTM1_TGATE1}}$/$\overline{\text{GTM2_TGATE2}}$	E24	I/O	OV_{DD}	
GPIO1[2]/$\overline{\text{GTM1_TOUT1}}$	B25	I/O	OV_{DD}	
GPIO1[3]/GTM1_TIN2/GTM2_TIN1	D24	I/O	OV_{DD}	
GPIO1[4]/$\overline{\text{GTM1_TGATE2}}$/$\overline{\text{GTM2_TGATE1}}$	A25	I/O	OV_{DD}	
GPIO1[5]/$\overline{\text{GTM1_TOUT2}}$/$\overline{\text{GTM2_TOUT1}}$	B24	I/O	OV_{DD}	
GPIO1[6]/GTM1_TIN3/GTM2_TIN4	A24	I/O	OV_{DD}	
GPIO1[7]/$\overline{\text{GTM1_TGATE3}}$/$\overline{\text{GTM2_TGATE4}}$	D23	I/O	OV_{DD}	
GPIO1[8]/$\overline{\text{GTM1_TOUT3}}$	B23	I/O	OV_{DD}	
GPIO1[9]/GTM1_TIN4/GTM2_TIN3	A23	I/O	OV_{DD}	
GPIO1[10]/$\overline{\text{GTM1_TGATE4}}$/$\overline{\text{GTM2_TGATE3}}$	F22	I/O	OV_{DD}	
GPIO1[11]/$\overline{\text{GTM1_TOUT4}}$/$\overline{\text{GTM2_TOUT3}}$	E22	I/O	OV_{DD}	
USB Port 1				
MPH1_D0_ENABLEN/DR_D0_ENABLEN	A26	I/O	OV_{DD}	
MPH1_D1_SER_TXD/DR_D1_SER_TXD	B26	I/O	OV_{DD}	
MPH1_D2_VMO_SE0/DR_D2_VMO_SE0	D25	I/O	OV_{DD}	
MPH1_D3_SPEED/DR_D3_SPEED	A27	I/O	OV_{DD}	
MPH1_D4_DP/DR_D4_DP	B27	I/O	OV_{DD}	
MPH1_D5_DM/DR_D5_DM	C27	I/O	OV_{DD}	
MPH1_D6_SER_RCV/DR_D6_SER_RCV	D26	I/O	OV_{DD}	
MPH1_D7_DRVVBUS/DR_D7_DRVVBUS	E26	I/O	OV_{DD}	

Table 51. MPC8347E (TBGA) Pinout Listing (continued)

Signal	Package Pin Number	Pin Type	Power Supply	Notes
MPH1_NXT/DR_SESS_VLD_NXT	D27	I	OV_{DD}	
MPH1_DIR_DPPULLUP/ DR_XCVR_SEL_DPPULLUP	A28	I/O	OV_{DD}	
MPH1_STP_SUSPEND/ DR_STP_SUSPEND	F26	O	OV_{DD}	
MPH1_PWRFAULT/ DR_RX_ERROR_PWRFAULT	E27	I	OV_{DD}	
MPH1_PCTL0/DR_TX_VALID_PCTL0	A29	O	OV_{DD}	
MPH1_PCTL1/DR_TX_VALIDH_PCTL1	D28	O	OV_{DD}	
MPH1_CLK/DR_CLK	B29	I	OV_{DD}	
USB Port 0				
MPH0_D0_ENABLEN/DR_D8_CHGVBUS	C29	I/O	OV_{DD}	
MPH0_D1_SER_TXD/DR_D9_DCHGVBUS	A30	I/O	OV_{DD}	
MPH0_D2_VMO_SE0/DR_D10_DPPD	E28	I/O	OV_{DD}	
MPH0_D3_SPEED/DR_D11_DMMD	B30	I/O	OV_{DD}	
MPH0_D4_DP/DR_D12_VBUS_VLD	C30	I/O	OV_{DD}	
MPH0_D5_DM/DR_D13_SESS_END	A31	I/O	OV_{DD}	
MPH0_D6_SER_RCV/DR_D14	B31	I/O	OV_{DD}	
MPH0_D7_DRVVBUS/DR_D15_IDPULLUP	C31	I/O	OV_{DD}	
MPH0_NXT/DR_RX_ACTIVE_ID	B32	I	OV_{DD}	
MPH0_DIR_DPPULLUP/DR_RESET	A32	I/O	OV_{DD}	
MPH0_STP_SUSPEND/DR_TX_READY	A33	I/O	OV_{DD}	
MPH0_PWRFAULT/DR_RX_VALIDH	C32	I	OV_{DD}	
MPH0_PCTL0/DR_LINE_STATE0	D31	I/O	OV_{DD}	
MPH0_PCTL1/DR_LINE_STATE1	E30	I/O	OV_{DD}	
MPH0_CLK/DR_RX_VALID	B33	I	OV_{DD}	
Programmable Interrupt Controller				
$\overline{\text{MCP_OUT}}$	AN33	O	OV_{DD}	2
$\overline{\text{IRQ}}$0/$\overline{\text{MCP_IN}}$/GPIO2[12]	C19	I/O	OV_{DD}	
$\overline{\text{IRQ}}$[1:5]/GPIO2[13:17]	C22, A22, D21, C21, B21	I/O	OV_{DD}	
$\overline{\text{IRQ}}$[6]/GPIO2[18]/CKSTOP_OUT	A21	I/O	OV_{DD}	
$\overline{\text{IRQ}}$[7]/GPIO2[19]/CKSTOP_IN	C20	I/O	OV_{DD}	
Ethernet Management Interface				
EC_MDC	A7	O	LV_{DD1}	
EC_MDIO	E9	I/O	LV_{DD1}	2

Table 51. MPC8347E (TBGA) Pinout Listing (continued)

Signal	Package Pin Number	Pin Type	Power Supply	Notes
Gigabit Reference Clock				
EC_GTX_CLK125	C8	I	LV_{DD1}	
Three-Speed Ethernet Controller (Gigabit Ethernet 1)				
TSEC1_COL/GPIO2[20]	A17	I/O	OV_{DD}	
TSEC1_CRS/GPIO2[21]	F12	I/O	LV_{DD1}	
TSEC1_GTX_CLK	D10	O	LV_{DD1}	3
TSEC1_RX_CLK	A11	I	LV_{DD1}	
TSEC1_RX_DV	B11	I	LV_{DD1}	
TSEC1_RX_ER/GPIO2[26]	B17	I/O	OV_{DD}	
TSEC1_RXD[7:4]/GPIO2[22:25]	B16, D16, E16, F16	I/O	OV_{DD}	
TSEC1_RXD[3:0]	E10, A8, F10, B8	I	LV_{DD1}	
TSEC1_TX_CLK	D17	I	OV_{DD}	
TSEC1_TXD[7:4]/GPIO2[27:30]	A15, B15, A14, B14	I/O	OV_{DD}	
TSEC1_TXD[3:0]	A10, E11, B10, A9	O	LV_{DD1}	11
TSEC1_TX_EN	B9	O	LV_{DD1}	
TSEC1_TX_ER/GPIO2[31]	A16	I/O	OV_{DD}	
Three-Speed Ethernet Controller (Gigabit Ethernet 2)				
TSEC2_COL/GPIO1[21]	C14	I/O	OV_{DD}	
TSEC2_CRS/GPIO1[22]	D6	I/O	LV_{DD2}	
TSEC2_GTX_CLK	A4	O	LV_{DD2}	
TSEC2_RX_CLK	B4	I	LV_{DD2}	
TSEC2_RX_DV/GPIO1[23]	E6	I/O	LV_{DD2}	
TSEC2_RXD[7:4]/GPIO1[26:29]	A13, B13, C13, A12	I/O	OV_{DD}	
TSEC2_RXD[3:0]/GPIO1[13:16]	D7, A6, E8, B7	I/O	LV_{DD2}	
TSEC2_RX_ER/GPIO1[25]	D14	I/O	OV_{DD}	
TSEC2_TXD[7]/GPIO1[31]	B12	I/O	OV_{DD}	
TSEC2_TXD[6]/DR_XCVR_TERM_SEL	C12	O	OV_{DD}	
TSEC2_TXD[5]/DR_UTMI_OPMODE1	D12	O	OV_{DD}	
TSEC2_TXD[4]/DR_UTMI_OPMODE0	E12	O	OV_{DD}	
TSEC2_TXD[3:0]/GPIO1[17:20]	B5, A5, F8, B6	I/O	LV_{DD2}	
TSEC2_TX_ER/GPIO1[24]	F14	I/O	OV_{DD}	
TSEC2_TX_EN/GPIO1[12]	C5	I/O	LV_{DD2}	3
TSEC2_TX_CLK/GPIO1[30]	E14	I/O	OV_{DD}	

Table 51. MPC8347E (TBGA) Pinout Listing (continued)

Signal	Package Pin Number	Pin Type	Power Supply	Notes
DUART				
UART_SOUT[1:2]/MSRCID[0:1]/LSRCID[0:1]	AK27, AN29	O	OV_{DD}	
UART_SIN[1:2]/MSRCID[2:3]/LSRCID[2:3]	AL28, AM29	I/O	OV_{DD}	
$\overline{\text{UART_CTS}}$[1]/MSRCID4/LSRCID4	AP30	I/O	OV_{DD}	
$\overline{\text{UART_CTS}}$[2]/MDVAL/ LDVAL	AN30	I/O	OV_{DD}	
$\overline{\text{UART_RTS}}$[1:2]	AP31, AM30	O	OV_{DD}	
I^2C interface				
IIC1_SDA	AK29	I/O	OV_{DD}	2
IIC1_SCL	AP32	I/O	OV_{DD}	2
IIC2_SDA	AN31	I/O	OV_{DD}	2
IIC2_SCL	AM31	I/O	OV_{DD}	2
SPI				
SPIMOSI	AN32	I/O	OV_{DD}	
SPIMISO	AP33	I/O	OV_{DD}	
SPICLK	AK30	I/O	OV_{DD}	
SPISEL	AL31	I	OV_{DD}	
Clocks				
PCI_CLK_OUT[0:4]	AN9, AP9, AM10, AN10, AJ11	O	OV_{DD}	
PCI_SYNC_IN/PCI_CLOCK	AK12	I	OV_{DD}	
PCI_SYNC_OUT	AP11	O	OV_{DD}	3
RTC/PIT_CLOCK	AM32	I	OV_{DD}	
CLKIN	AM9	I	OV_{DD}	
JTAG				
TCK	E20	I	OV_{DD}	
TDI	F20	I	OV_{DD}	4
TDO	B20	O	OV_{DD}	3
TMS	A20	I	OV_{DD}	4
$\overline{\text{TRST}}$	B19	I	OV_{DD}	4
Test				
TEST	D22	I	OV_{DD}	6
TEST_SEL	AL13	I	OV_{DD}	7
PMC				
$\overline{\text{QUIESCE}}$	A18	O	OV_{DD}	

Table 51. MPC8347E (TBGA) Pinout Listing (continued)

Signal	Package Pin Number	Pin Type	Power Supply	Notes
System Control				
$\overline{\text{PORESET}}$	C18	I	OV_{DD}	
$\overline{\text{HRESET}}$	B18	I/O	OV_{DD}	1
$\overline{\text{SRESET}}$	D18	I/O	OV_{DD}	2
Thermal Management				
THERM0	K32	I	—	9
Power and Ground Signals				
$AV_{DD}1$	L31	Power for e300 PLL (1.2 V)	$AV_{DD}1$	
$AV_{DD}2$	AP12	Power for system PLL (1.2 V)	$AV_{DD}2$	
$AV_{DD}3$	AE1	Power for DDR DLL (1.2 V)	$AV_{DD}3$	
$AV_{DD}4$	AJ13	Power for LBIU DLL (1.2 V)	$AV_{DD}4$	
GND	A1, A34, C1, C7, C10, C11, C15, C23, C25, C28, D1, D8, D20, D30, E7, E13, E15, E17, E18, E21, E23, E25, E32, F6, F19, F27, F30, F34, G31, H5, J4, J34, K30, L5, M2, M5, M30, M33, N3, N5, P30, R5, R32, T5, T30, U6, U29, U33, V2, V5, V30, W6, W30, Y30, AA2, AA30, AB2, AB6, AB30, AC3, AC6, AD31, AE5, AF2, AF5, AF31, AG30, AG31, AH4, AJ3, AJ19, AJ22, AK7, AK13, AK14, AK16, AK18, AK20, AK25, AK28, AL3, AL5, AL10, AL12, AL22, AL27, AM1, AM6, AM7, AN12, AN17, AN34, AP1, AP8, AP34	—	—	
GV_{DD}	A2, E2, G5, G6, J5, K4, K5, L4, N4, P5, R6, T6, U5, V1, W5, Y5, AA4, AB3, AC4, AD5, AF3, AG5, AH2, AH5, AH6, AJ6, AK6, AK8, AK9, AL6	Power for DDR DRAM I/O voltage (2.5 V)	GV_{DD}	
$LV_{DD}1$	C9, D11	Power for three-speed Ethernet #1 and for Ethernet management interface I/O (2.5 V, 3.3 V)	$LV_{DD}1$	

Table 51. MPC8347E (TBGA) Pinout Listing (continued)

Signal	Package Pin Number	Pin Type	Power Supply	Notes
$LV_{DD}2$	C6, D9	Power for three-speed Ethernet #2 I/O (2.5 V, 3.3 V)	$LV_{DD}2$	
V_{DD}	E19, E29, F7, F9, F11,F13, F15, F17, F18, F21, F23, F25, F29, H29, J6, K29, M29, N6, P29, T29, U30, V6, V29, W29, AB29, AC5, AD29, AF6, AF29, AH29, AJ8, AJ12, AJ14, AJ16, AJ18, AJ20, AJ21, AJ23, AJ25, AJ26, AJ27, AJ28, AJ29, AK10	Power for core (1.2 V)	V_{DD}	
OV_{DD}	B22, B28, C16, C17, C24, C26, D13, D15, D19, D29, E31, F28, G33, H30, L29, L32, N32, P31, R31, U32, W31, Y29, AA29, AC30, AE31, AF30, AG29, AJ17, AJ30, AK11, AL15, AL19, AL21, AL29, AL30, AM20, AM23, AM24, AM26, AM28, AN11, AN13	PCI, 10/100 Ethernet, and other standard (3.3 V)	OV_{DD}	
MVREF1	M3	I	DDR reference voltage	
MVREF2	AD2	I	DDR reference voltage	

Table 51. MPC8347E (TBGA) Pinout Listing (continued)

Signal	Package Pin Number	Pin Type	Power Supply	Notes
No Connection				
NC	W32, AA31, AA32, AA33, AA34, AB31, AB32, AB33, AB34, AC29, AC31, AC33, AC34, AD30, AD32, AD33, AD34, AE29, AE30, AH32, AH33, AH34, AM33, AJ31, AJ32, AJ33, AJ34, AK32, AK33, AK34, AM34, AL33, AL34, AK31, AH30, AC32, AE32, AH31, AL32, AG34, AE33, AF32, AE34, AF34, AF33, AG33, AG32, AL11, AM11, AP10, Y32, Y34, Y31, Y33	—	—	

Notes:

1. This pin is an open-drain signal. A weak pull-up resistor (1 kΩ) should be placed on this pin to OV_{DD}.
2. This pin is an open-drain signal. A weak pull-up resistor (2–10 kΩ) should be placed on this pin to OV_{DD}.
3. During reset, this output is actively driven rather than three-stated.
4. These JTAG pins have weak internal pull-up P-FETs that are always enabled.
5. This pin should have a weak pull-up if the chip is in PCI host mode. Follow the PCI specifications.
6. This pin must always be tied to GND.
7. This pin must always be pulled up to OV_{DD}.
8. This pin must always be left not connected.
9. Thermal sensitive resistor.
10. It is recommended that MDIC0 be tied to GRD using an 18 Ω resistor and MDIC1 be tied to DDR power using an 18 Ω resistor.
11. TSEC1_TXD[3] is required an external pull-up resistor. For proper functionality of the device, this pin must be pulled up or actively driven high during a hard reset. No external pull-down resistors are allowed to be attached to this net.

Table 52 provides the pinout listing for the MPC8347E, 620 PBGA package.

Table 52. MPC8347E (PBGA) Pinout Listing

Signal	Package Pin Number	Pin Type	Power Supply	Notes
PCI				
$\overline{\text{PCI1_INTA}}$/$\overline{\text{IRQ_OUT}}$	D20	O	OV_{DD}	2
$\overline{\text{PCI1_RESET_OUT}}$	B21	O	OV_{DD}	
PCI1_AD[31:0]	E19, D17, A16, A18, B17, B16, D16, B18, E17, E16, A15, C16, D15, D14, C14, A12, D12, B11, C11, E12, A10, C10, A9, E11, E10, B9, B8, D9, A8, C9, D8, C8	I/O	OV_{DD}	
PCI1_C/$\overline{\text{BE}}$[3:0]	A17, A14, A11, B10	I/O	OV_{DD}	
PCI1_PAR	D13	I/O	OV_{DD}	
$\overline{\text{PCI1_FRAME}}$	B14	I/O	OV_{DD}	5
$\overline{\text{PCI1_TRDY}}$	A13	I/O	OV_{DD}	5

Table 52. MPC8347E (PBGA) Pinout Listing (continued)

Signal	Package Pin Number	Pin Type	Power Supply	Notes
PCI1_IRDY	E13	I/O	OV_{DD}	5
PCI1_STOP	C13	I/O	OV_{DD}	5
PCI1_DEVSEL	B13	I/O	OV_{DD}	5
PCI1_IDSEL	C17	I	OV_{DD}	
PCI1_SERR	C12	I/O	OV_{DD}	5
PCI1_PERR	B12	I/O	OV_{DD}	5
PCI1_REQ[0]	A21	I/O	OV_{DD}	
PCI1_REQ[1]/CPCI1_HS_ES	C19	I	OV_{DD}	
PCI1_REQ[2:4]	C18, A19, E20	I	OV_{DD}	
PCI1_GNT0	B20	I/O	OV_{DD}	
PCI1_GNT1/CPCI1_HS_LED	C20	O	OV_{DD}	
PCI1_GNT2/CPCI1_HS_ENUM	B19	O	OV_{DD}	
PCI1_GNT[3:4]	A20, E18	O	OV_{DD}	
M66EN	L26	I	OV_{DD}	
DDR SDRAM Memory Interface				
MDQ[0:63]	AC25, AD27, AD25, AH27, AE28, AD26, AD24, AF27, AF25, AF28, AH24, AG26, AE25, AG25, AH26, AH25, AG22, AH22, AE21, AD19, AE22, AF23, AE19, AG20, AG19, AD17, AE16, AF16, AF18, AG18, AH17, AH16, AG9, AD12, AG7, AE8, AD11, AH9, AH8, AF6, AF8, AE6, AF1, AE4, AG8, AH3, AG3, AG4, AH2, AD7, AB4, AB3, AG1, AD5, AC2, AC1, AC4, AA3, Y4, AA4, AB1, AB2, Y5, Y3	I/O	GV_{DD}	
MECC[0:4]/MSRCID[0:4]	AG13, AE14, AH12, AH10, AE15	I/O	GV_{DD}	
MECC[5]/MDVAL	AH14	I/O	GV_{DD}	
MECC[6:7]	AE13, AH11	I/O	GV_{DD}	
MDM[0:8]	AG28, AG24, AF20, AG17, AE9, AH5, AD1, AA2, AG12	O	GV_{DD}	
MDQS[0:8]	AE27, AE26, AE20, AH18, AG10, AF5, AC3, AA1, AH13	I/O	GV_{DD}	
MBA[0:1]	AF10, AF11	O	GV_{DD}	
MA[0:14]	AF13, AF15, AG16, AD16, AF17, AH20, AH19, AH21, AD18, AG21, AD13, AF21, AF22, AE1, AA5	O	GV_{DD}	
MWE	AD10	O	GV_{DD}	
MRAS	AF7	O	GV_{DD}	

Table 52. MPC8347E (PBGA) Pinout Listing (continued)

Signal	Package Pin Number	Pin Type	Power Supply	Notes
$\overline{\text{MCAS}}$	AG6	O	GV_{DD}	
$\overline{\text{MCS}}$[0:3]	AE7, AH7, AH4, AF2	O	GV_{DD}	
MCKE[0:1]	AG23, AH23	O	GV_{DD}	3
MCK[0:5]	AH15, AE24, AE2, AF14, AE23, AD3	O	GV_{DD}	
$\overline{\text{MCK}}$[0:5]	AG15, AD23, AE3, AG14, AF24, AD2	O	GV_{DD}	
Pins Reserved for Future DDR2 (They should be left unconnected for MPC8347)				
MODT[0:3]	AG5, AD4, AH6, AF4	—	—	
MBA[2]	AD22			
SPARE1	AF12	—	—	7
SPARE2	AG11	—	—	6
Local Bus Controller Interface				
LAD[0:31]	T4, T5, T1, R2, R3, T2, R1, R4, P1, P2, P3, P4, N1, N4, N2, N3, M1, M2, M3, N5, M4, L1, L2, L3, K1, M5, K2, K3, J1, J2, L5, J3	I/O	OV_{DD}	
LDP[0]/$\overline{\text{CKSTOP_OUT}}$	H1	I/O	OV_{DD}	
LDP[1]/$\overline{\text{CKSTOP_IN}}$	K5	I/O	OV_{DD}	
LDP[2]	H2	I/O	OV_{DD}	
LDP[3]	G1	I/O	OV_{DD}	
LA[27:31]	J4, H3, G2, F1, G3	O	OV_{DD}	
$\overline{\text{LCS}}$[0:3]	J5, H4, F2, E1	O	OV_{DD}	
$\overline{\text{LWE}}$[0:3]/LSDDQM[0:3]/$\overline{\text{LBS}}$[0:3]	F3, G4, D1, E2	O	OV_{DD}	
LBCTL	H5	O	OV_{DD}	
LALE	E3	O	OV_{DD}	
LGPL0/LSDA10/cfg_reset_source0	F4	I/O	OV_{DD}	
LGPL1/$\overline{\text{LSDWE}}$/cfg_reset_source1	D2	I/O	OV_{DD}	
LGPL2/$\overline{\text{LSDRAS}}$/$\overline{\text{LOE}}$	C1	O	OV_{DD}	
LGPL3/$\overline{\text{LSDCAS}}$/cfg_reset_source2	C2	I/O	OV_{DD}	
LGPL4/$\overline{\text{LGTA}}$/LUPWAIT/LPBSE	C3	I/O	OV_{DD}	
LGPL5/cfg_clkin_div	B3	I/O	OV_{DD}	
LCKE	E4	O	OV_{DD}	
LCLK[0:2]	D4, A3, C4	O	OV_{DD}	
LSYNC_OUT	U3	O	OV_{DD}	
LSYNC_IN	Y2	I	OV_{DD}	

Table 52. MPC8347E (PBGA) Pinout Listing (continued)

Signal	Package Pin Number	Pin Type	Power Supply	Notes
General Purpose I/O Timers				
GPIO1[0]/GTM1_TIN1/GTM2_TIN2	D27	I/O	OV_{DD}	
GPIO1[1]/$\overline{\text{GTM1_TGATE1}}$/$\overline{\text{GTM2_TGATE2}}$	E26	I/O	OV_{DD}	
GPIO1[2]/$\overline{\text{GTM1_TOUT1}}$	D28	I/O	OV_{DD}	
GPIO1[3]/GTM1_TIN2/GTM2_TIN1	G25	I/O	OV_{DD}	
GPIO1[4]/$\overline{\text{GTM1_TGATE2}}$/$\overline{\text{GTM2_TGATE1}}$	J24	I/O	OV_{DD}	
GPIO1[5]/$\overline{\text{GTM1_TOUT2}}$/$\overline{\text{GTM2_TOUT1}}$	F26	I/O	OV_{DD}	
GPIO1[6]/GTM1_TIN3/GTM2_TIN4	E27	I/O	OV_{DD}	
GPIO1[7]/$\overline{\text{GTM1_TGATE3}}$/$\overline{\text{GTM2_TGATE4}}$	E28	I/O	OV_{DD}	
GPIO1[8]/$\overline{\text{GTM1_TOUT3}}$	H25	I/O	OV_{DD}	
GPIO1[9]/GTM1_TIN4/GTM2_TIN3	F27	I/O	OV_{DD}	
GPIO1[10]/$\overline{\text{GTM1_TGATE4}}$/$\overline{\text{GTM2_TGATE3}}$	K24	I/O	OV_{DD}	
GPIO1[11]/$\overline{\text{GTM1_TOUT4}}$/$\overline{\text{GTM2_TOUT3}}$	G26	I/O	OV_{DD}	
USB Port 1				
MPH1_D0_ENABLEN/DR_D0_ENABLEN	C28	I/O	OV_{DD}	
MPH1_D1_SER_TXD/DR_D1_SER_TXD	F25	I/O	OV_{DD}	
MPH1_D2_VMO_SE0/DR_D2_VMO_SE0	B28	I/O	OV_{DD}	
MPH1_D3_SPEED/DR_D3_SPEED	C27	I/O	OV_{DD}	
MPH1_D4_DP/DR_D4_DP	D26	I/O	OV_{DD}	
MPH1_D5_DM/DR_D5_DM	E25	I/O	OV_{DD}	
MPH1_D6_SER_RCV/DR_D6_SER_RCV	C26	I/O	OV_{DD}	
MPH1_D7_DRVVBUS/DR_D7_DRVVBUS	D25	I/O	OV_{DD}	
MPH1_NXT/DR_SESS_VLD_NXT	B26	I	OV_{DD}	
MPH1_DIR_DPPULLUP/ DR_XCVR_SEL_DPPULLUP	E24	I/O	OV_{DD}	
MPH1_STP_SUSPEND/ DR_STP_SUSPEND	A27	O	OV_{DD}	
MPH1_PWRFAULT/ DR_RX_ERROR_PWRFAULT	C25	I	OV_{DD}	
MPH1_PCTL0/DR_TX_VALID_PCTL0	A26	O	OV_{DD}	
MPH1_PCTL1/DR_TX_VALIDH_PCTL1	B25	O	OV_{DD}	
MPH1_CLK/DR_CLK	A25	I	OV_{DD}	
USB Port 0				
MPH0_D0_ENABLEN/DR_D8_CHGVBUS	D24	I/O	OV_{DD}	
MPH0_D1_SER_TXD/DR_D9_DCHGVBUS	C24	I/O	OV_{DD}	

Table 52. MPC8347E (PBGA) Pinout Listing (continued)

Signal	Package Pin Number	Pin Type	Power Supply	Notes
MPH0_D2_VMO_SE0/DR_D10_DPPD	B24	I/O	OV_{DD}	
MPH0_D3_SPEED/DR_D11_DMMD	A24	I/O	OV_{DD}	
MPH0_D4_DP/DR_D12_VBUS_VLD	D23	I/O	OV_{DD}	
MPH0_D5_DM/DR_D13_SESS_END	C23	I/O	OV_{DD}	
MPH0_D6_SER_RCV/DR_D14	B23	I/O	OV_{DD}	
MPH0_D7_DRVVBUS/DR_D15_IDPULLUP	A23	I/O	OV_{DD}	
MPH0_NXT/DR_RX_ACTIVE_ID	D22	I	OV_{DD}	
MPH0_DIR_DPPULLUP/DR_RESET	C22	I/O	OV_{DD}	
MPH0_STP_SUSPEND/DR_TX_READY	B22	I/O	OV_{DD}	
MPH0_PWRFAULT/DR_RX_VALIDH	A22	I	OV_{DD}	
MPH0_PCTL0/DR_LINE_STATE0	E21	I/O	OV_{DD}	
MPH0_PCTL1/DR_LINE_STATE1	D21	I/O	OV_{DD}	
MPH0_CLK/DR_RX_VALID	C21	I	OV_{DD}	
Programmable Interrupt Controller				
$\overline{\text{MCP_OUT}}$	E8	O	OV_{DD}	2
$\overline{\text{IRQ}}$0/$\overline{\text{MCP_IN}}$/GPIO2[12]	J28	I/O	OV_{DD}	
$\overline{\text{IRQ}}$[1:5]/GPIO2[13:17]	K25, J25, H26, L24, G27	I/O	OV_{DD}	
$\overline{\text{IRQ}}$[6]/GPIO2[18]/CKSTOP_OUT	G28	I/O	OV_{DD}	
$\overline{\text{IRQ}}$[7]/GPIO2[19]/CKSTOP_IN	J26	I/O	OV_{DD}	
Ethernet Management Interface				
EC_MDC	Y24	O	LV_{DD1}	
EC_MDIO	Y25	I/O	LV_{DD1}	2
Gigabit Reference Clock				
EC_GTX_CLK125	Y26	I	LV_{DD1}	
Three-Speed Ethernet Controller (Gigabit Ethernet 1)				
TSEC1_COL/GPIO2[20]	M26	I/O	OV_{DD}	
TSEC1_CRS/GPIO2[21]	U25	I/O	LV_{DD1}	
TSEC1_GTX_CLK	V24	O	LV_{DD1}	3
TSEC1_RX_CLK	U26	I	LV_{DD1}	
TSEC1_RX_DV	U24	I	LV_{DD1}	
TSEC1_RX_ER/GPIO2[26]	L28	I/O	OV_{DD}	
TSEC1_RXD[7:4]/GPIO2[22:25]	M27, M28, N26, N27	I/O	OV_{DD}	
TSEC1_RXD[3:0]	W26, W24, Y28, Y27	I	LV_{DD1}	
TSEC1_TX_CLK	N25	I	OV_{DD}	

Table 52. MPC8347E (PBGA) Pinout Listing (continued)

Signal	Package Pin Number	Pin Type	Power Supply	Notes
TSEC1_TXD[7:4]/GPIO2[27:30]	N28, P25, P26, P27	I/O	OV_{DD}	
TSEC1_TXD[3:0]	V28, V27, V26, W28	O	LV_{DD1}	10
TSEC1_TX_EN	W27	O	LV_{DD1}	
TSEC1_TX_ER/GPIO2[31]	N24	I/O	OV_{DD}	
Three-Speed Ethernet Controller (Gigabit Ethernet 2)				
TSEC2_COL/GPIO1[21]	P28	I/O	OV_{DD}	
TSEC2_CRS/GPIO1[22]	AC28	I/O	LV_{DD2}	
TSEC2_GTX_CLK	AC27	O	LV_{DD2}	
TSEC2_RX_CLK	AB25	I	LV_{DD2}	
TSEC2_RX_DV/GPIO1[23]	AC26	I/O	LV_{DD2}	
TSEC2_RXD[7:4]/GPIO1[26:29]	R28, T24, T25, T26	I/O	OV_{DD}	
TSEC2_RXD[3:0]/GPIO1[13:16]	AA25, AA26, AA27, AA28	I/O	LV_{DD2}	
TSEC2_RX_ER/GPIO1[25]	R25	I/O	OV_{DD}	
TSEC2_TXD[7]/GPIO1[31]	T27	I/O	OV_{DD}	
TSEC2_TXD[6]/DR_XCVR_TERM_SEL	T28	O	OV_{DD}	
TSEC2_TXD[5]/DR_UTMI_OPMODE1	U28	O	OV_{DD}	
TSEC2_TXD[4]/DR_UTMI_OPMODE0	U27	O	OV_{DD}	
TSEC2_TXD[3:0]/GPIO1[17:20]	AB26, AB27, AA24, AB28	I/O	LV_{DD2}	
TSEC2_TX_ER/GPIO1[24]	R27	I/O	OV_{DD}	
TSEC2_TX_EN/GPIO1[12]	AD28	I/O	LV_{DD2}	3
TSEC2_TX_CLK/GPIO1[30]	R26	I/O	OV_{DD}	
DUART				
UART_SOUT[1:2]/MSRCID[0:1]/LSRCID[0:1]	B4, A4	O	OV_{DD}	
UART_SIN[1:2]/MSRCID[2:3]/LSRCID[2:3]	D5, C5	I/O	OV_{DD}	
$\overline{\text{UART_CTS}}$[1]/MSRCID4/LSRCID4	B5	I/O	OV_{DD}	
$\overline{\text{UART_CTS}}$[2]/MDVAL/LDVAL	A5	I/O	OV_{DD}	
$\overline{\text{UART_RTS}}$[1:2]	D6, C6	O	OV_{DD}	
I^2C interface				
IIC1_SDA	E5	I/O	OV_{DD}	2
IIC1_SCL	A6	I/O	OV_{DD}	2
IIC2_SDA	B6	I/O	OV_{DD}	2
IIC2_SCL	E7	I/O	OV_{DD}	2
SPI				
SPIMOSI	D7	I/O	OV_{DD}	

Table 52. MPC8347E (PBGA) Pinout Listing (continued)

Signal	Package Pin Number	Pin Type	Power Supply	Notes
SPIMISO	C7	I/O	OV_{DD}	
SPICLK	B7	I/O	OV_{DD}	
SPISEL	A7	I	OV_{DD}	
Clocks				
PCI_CLK_OUT[0:2]	Y1, W3, W2	O	OV_{DD}	
PCI_CLK_OUT[3]/$\overline{\text{LCS}}$[6]	W1	O	OV_{DD}	
PCI_CLK_OUT[4]/$\overline{\text{LCS}}$[7]	V3	O	OV_{DD}	
PCI_SYNC_IN/PCI_CLOCK	U4	I	OV_{DD}	
PCI_SYNC_OUT	U5	O	OV_{DD}	3
RTC/PIT_CLOCK	E9	I	OV_{DD}	
CLKIN	W5	I	OV_{DD}	
JTAG				
TCK	H27	I	OV_{DD}	
TDI	H28	I	OV_{DD}	4
TDO	M24	O	OV_{DD}	3
TMS	J27	I	OV_{DD}	4
$\overline{\text{TRST}}$	K26	I	OV_{DD}	4
Test				
TEST	F28	I	OV_{DD}	6
TEST_SEL	T3	I	OV_{DD}	6
PMC				
$\overline{\text{QUIESCE}}$	K27	O	OV_{DD}	
System Control				
$\overline{\text{PORESET}}$	K28	I	OV_{DD}	
$\overline{\text{HRESET}}$	M25	I/O	OV_{DD}	1
$\overline{\text{SRESET}}$	L27	I/O	OV_{DD}	2
Thermal Management				
THERM0	B15	I	—	8
Power and Ground Signals				
$AV_{DD}1$	C15	Power for e300 PLL (1.2 V)	$AV_{DD}1$	
$AV_{DD}2$	U1	Power for system PLL (1.2 V)	$AV_{DD}2$	

Table 52. MPC8347E (PBGA) Pinout Listing (continued)

Signal	Package Pin Number	Pin Type	Power Supply	Notes
$AV_{DD}3$	AF9	Power for DDR DLL (1.2 V)	$AV_{DD}3$	
$AV_{DD}4$	U2	Power for LBIU DLL (1.2 V)	$AV_{DD}4$	
GND	A2, B1, B2, D10, D18, E6, E14, E22, F9, F12, F15, F18, F21, F24, G5, H6, J23, L4, L6, L12, L13, L14, L15, L16, L17, M11, M12, M13, M14, M15, M16, M17, M18, M23, N11, N12, N13, N14, N15, N16, N17, N18, P6, P11, P12, P13, P14, P15, P16, P17, P18, P24, R5, R11, R12, R13, R14, R15, R16, R17, R18, R23, T11, T12, T13, T14, T15, T16, T17, T18, U6, U11, U12, U13, U14, U15, U16, U17, U18, V12, V13, V14, V15, V16, V17, V23, V25, W4, Y6, AA23, AB24, AC5, AC8, AC11, AC14, AC17, AC20, AD9, AD15, AD21, AE12, AE18, AF3, AF26	—	—	
GV_{DD}	U9, V9, W10, W19, Y11, Y12, Y14, Y15, Y17, Y18, AA6, AB5, AC9, AC12, AC15, AC18, AC21, AC24, AD6, AD8, AD14, AD20, AE5, AE11, AE17, AG2, AG27	Power for DDR DRAM I/O voltage (2.5 V)	GV_{DD}	
$LV_{DD}1$	U20, W25	Power for three-speed Ethernet #1 and for Ethernet management interface I/O (2.5 V, 3.3 V)	$LV_{DD}1$	
$LV_{DD}2$	V20, Y23	Power for three-speed Ethernet #2 I/O (2.5 V, 3.3 V)	$LV_{DD}2$	
V_{DD}	J11, J12, J15, K10, K11, K12, K13, K14, K15, K16, K17, K18, K19, L10, L11, L18, L19, M10, M19, N10, N19, P9, P10, P19, R10, R19, R20, T10, T19, U10, U19, V10, V11, V18, V19, W11, W12, W13, W14, W15, W16, W17, W18	Power for core (1.2 V)	V_{DD}	
OV_{DD}	B27, D3, D11, D19, E15, E23, F5, F8, F11, F14, F17, F20, G24, H23, H24, J6, J14, J17, J18, K4, L9, L20, L23, L25, M6, M9, M20, P5, P20, P23, R6, R9, R24, U23, V4, V6	PCI, 10/100 Ethernet, and other standard (3.3 V)	OV_{DD}	

Table 52. MPC8347E (PBGA) Pinout Listing (continued)

Signal	Package Pin Number	Pin Type	Power Supply	Notes
MVREF1	AF19	I	DDR reference voltage	
MVREF2	AE10	I	DDR reference voltage	
No Connection				
NC	V1, V2, V5			

Notes:

1. This pin is an open-drain signal. A weak pull-up resistor (1 kΩ) should be placed on this pin to OV_{DD}.
2. This pin is an open-drain signal. A weak pull-up resistor (2–10 kΩ) should be placed on this pin to OV_{DD}.
3. During reset, this output is actively driven rather than three-stated.
4. These JTAG pins have weak internal pull-up P-FETs that are always enabled.
5. This pin should have a weak pull-up if the chip is in PCI host mode. Follow the PCI specifications.
6. This pin must always be tied to GND.
7. This pin must always be left not connected.
8. Thermal sensitive resistor.
9. It is recommended that MDIC0 be tied to GRD using an 18 Ω resistor and MDIC1 be tied to DDR power using an 18 Ω resistor.
10. TSEC1_TXD[3] is required an external pull-up resistor. For proper functionality of the device, this pin must be pulled up or actively driven high during a hard reset. No external pull-down resistors are allowed to be attached to this net.

19 Clocking

Figure 41 shows the internal distribution of the clocks.

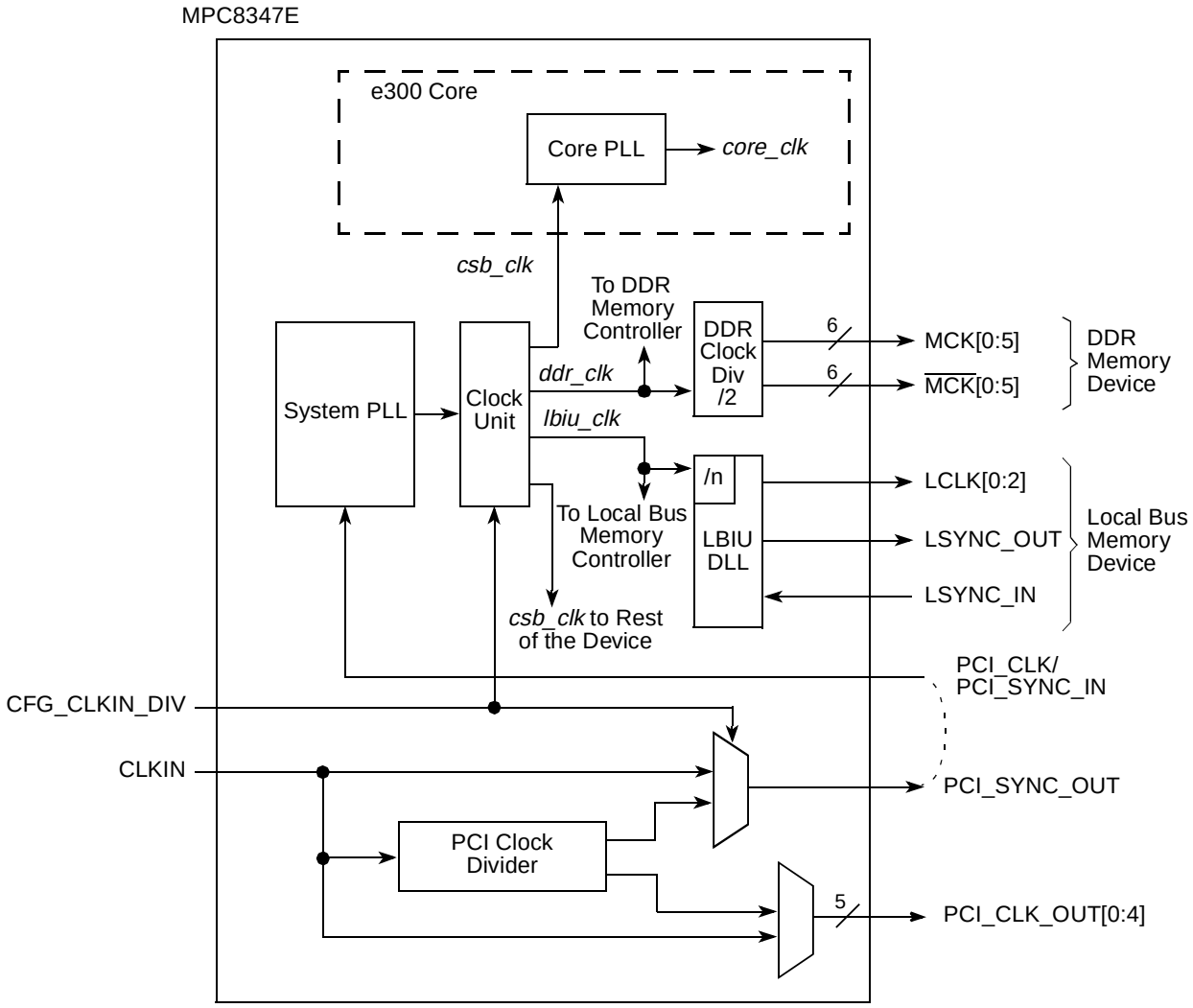

Figure 41. MPC8347E Clock Subsystem

The primary clock source can be one of two inputs, CLKIN or PCI_CLK, depending on whether the device is configured in PCI host or PCI agent mode. When the MPC8347E is configured as a PCI host device, CLKIN is its primary input clock. CLKIN feeds the PCI clock divider (÷2) and the multiplexors for PCI_SYNC_OUT and PCI_CLK_OUT. The CFG_CLKIN_DIV configuration input selects whether CLKIN or CLKIN/2 is driven out on the PCI_SYNC_OUT signal. The OCCR[PCICD*n*] parameters select whether CLKIN or CLKIN/2 is driven out on the PCI_CLK_OUT*n* signals.

PCI_SYNC_OUT is connected externally to PCI_SYNC_IN to allow the internal clock subsystem to synchronize to the system PCI clocks. PCI_SYNC_OUT must be connected properly to PCI_SYNC_IN, with equal delay to all PCI agent devices in the system, to allow the MPC8347E to function. When the MPC8347E is configured as a PCI agent device, PCI_CLK is the primary input clock and the CLKIN signal should be tied to GND.

As shown in Figure 41, the primary clock input (frequency) is multiplied up by the system phase-locked loop (PLL) and the clock unit to create the coherent system bus clock (*csb_clk*), the internal clock for the DDR controller (*ddr_clk*), and the internal clock for the local bus interface unit (*lbiu_clk*).

The *csb_clk* frequency is derived from a complex set of factors that can be simplified into the following equation:

$$csb_clk = \{PCI_SYNC_IN \times (1 + CFG_CLKIN_DIV)\} \times SPMF$$

In PCI host mode, PCI_SYNC_IN × (1 + CFG_CLKIN_DIV) is the CLKIN frequency.

The *csb_clk* serves as the clock input to the e300 core. A second PLL inside the e300 core multiplies the *csb_clk* frequency to create the internal clock for the e300 core (*core_clk*). The system and core PLL multipliers are selected by the SPMF and COREPLL fields in the reset configuration word low (RCWL), which is loaded at power-on reset or by one of the hard-coded reset options. See the chapter on reset, clocking, and initialization in the *MPC8349E Reference Manual* for more information on the clock subsystem.

The internal *ddr_clk* frequency is determined by the following equation:

$$ddr_clk = csb_clk \times (1 + RCWL[DDRCM])$$

ddr_clk is not the external memory bus frequency; *ddr_clk* passes through the DDR clock divider (÷2) to create the differential DDR memory bus clock outputs (MCK and $\overline{\text{MCK}}$). However, the data rate is the same frequency as *ddr_clk.*

The internal *lbiu_clk* frequency is determined by the following equation:

$$lbiu_clk = csb_clk \times (1 + RCWL[LBIUCM])$$

lbiu_clk is not the external local bus frequency; *lbiu_clk* passes through the LBIU clock divider to create the external local bus clock outputs (LSYNC_OUT and LCLK[0:2]). The LBIU clock divider ratio is controlled by LCCR[CLKDIV].

In addition, some of the internal units may have to be shut off or operate at lower frequency than the *csb_clk* frequency. Those units have a default clock ratio that can be configured by a memory-mapped register after the device exits reset. Table 53 specifies which units have a configurable clock frequency.

Table 53. Configurable Clock Units

Unit	Default Frequency	Options
TSEC1	*csb_clk/3*	Off, *csb_clk, csb_clk/2, csb_clk/3*
TSEC2, I^2C1	*csb_clk/3*	Off, *csb_clk, csb_clk/2, csb_clk/3*
Security core	*csb_clk/3*	Off, *csb_clk,* csb_clk/2, *csb_clk/3*
USB DR, USB MPH	*csb_clk/3*	Off, csb_clk, csb_clk/2, *csb_clk/3*
PCI and DMA complex	*csb_clk*	Off, *csb_clk*

Table 54 provides the operating frequencies for the MPC8347E TBGA under recommended operating conditions (see Table 2).

Table 54. Operating Frequencies for TBGA

Characteristic[1]	400 MHz	533 MHz	667 MHz	Unit
e300 core frequency (*core_clk*)	266–400	266–533	266–667	MHz
Coherent system bus frequency (*csb_clk*)	100–266	100–266	100–333	MHz
DDR and memory bus frequency (MCLK)[2]	100–133	100–133	100–166.67	MHz
Local bus frequency (LCLK*n*)[3]	16.67–133	16.67–133	16.67–133	MHz
PCI input frequency (CLKIN or PCI_CLK)	25–66	25–66	25–66	MHz
Security core maximum internal operating frequency	133	133	166	MHz
USB_DR, USB_MPH maximum internal operating frequency	133	133	166	MHz

1 The CLKIN frequency, RCWL[SPMF], and RCWL[COREPLL] settings must be chosen so that the resulting *csb_clk*, MCLK, LCLK[0:2], and *core_clk* frequencies do not exceed their respective maximum or minimum operating frequencies. The value of SCCR[ENCCM], SCCR[USBDRCM], and SCCR[USBMPHCM] must be programmed so that the maximum internal operating frequency of the Security core and USB modules does not exceed the respective values listed in this table.

2 The DDR data rate is 2x the DDR memory bus frequency.

3 The local bus frequency is 1/2, 1/4, or 1/8 of the *lbiu_clk* frequency (depending on LCCR[CLKDIV]) which is in turn 1x or 2x the *csb_clk* frequency (depending on RCWL[LBIUCM]).

Table 55 provides the operating frequencies for the MPC8347E PBGA under recommended operating conditions.

Table 55. Operating Frequencies for PBGA

Characteristic[1]	266 MHz	333 MHz	400 MHz	Unit
e300 core frequency (*core_clk*)	200–266	200–333	200–400	MHz
Coherent system bus frequency (*csb_clk*)	100–266			MHz
Local bus frequency (LCLK*n*)[2]	16.67–133			MHz
PCI input frequency (CLKIN or PCI_CLK)	25–66			MHz
Security core maximum internal operating frequency	133			MHz
USB_DR, USB_MPH maximum internal operating frequency	133			MHz

1 The CLKIN frequency, RCWL[SPMF], and RCWL[COREPLL] settings must be chosen so that the resulting *csb_clk*, MCLK, LCLK[0:2], and *core_clk* frequencies do not exceed their respective maximum or minimum operating frequencies. The value of SCCR[ENCCM], SCCR[USBDRCM], and SCCR[USBMPHCM] must be programmed so that the maximum internal operating frequency of the Security core and USB modules does not exceed the respective values listed in this table.

2 The local bus frequency is 1/2, 1/4, or 1/8 of the *lbiu_clk* frequency (depending on LCCR[CLKDIV]) which is in turn 1x or 2x the *csb_clk* frequency (depending on RCWL[LBIUCM]).

19.1 System PLL Configuration

The system PLL is controlled by the RCWL[SPMF] parameter. Table 56 shows the multiplication factor encodings for the system PLL.

Table 56. System PLL Multiplication Factors

RCWL[SPMF]	System PLL Multiplication Factor
0000	× 16
0001	Reserved
0010	× 2
0011	× 3
0100	× 4
0101	× 5
0110	× 6
0111	× 7
1000	× 8
1001	× 9
1010	× 10
1011	× 11
1100	× 12
1101	× 13
1110	× 14
1111	× 15

As described in Section 19, “Clocking,” the LBIUCM, DDRCM, and SPMF parameters in the reset configuration word low and the CFG_CLKIN_DIV configuration input signal select the ratio between the primary clock input (CLKIN or PCI_CLK) and the internal coherent system bus clock (*csb_clk*). Table 57 and Table 58 show the expected frequency values for the CSB frequency for select *csb_clk* to CLKIN/PCI_SYNC_IN ratios.

Table 57. CSB Frequency Options for Host Mode

CFG_CLKIN_DIV at Reset[1]	SPMF	*csb_clk* : Input Clock Ratio[2]	Input Clock Frequency (MHz)[2]			
			16.67	25	33.33	66.67
			csb_clk Frequency (MHz)			
Low	0010	2 : 1				133
Low	0011	3 : 1			100	200
Low	0100	4 : 1		100	133	266
Low	0101	5 : 1		125	166	333
Low	0110	6 : 1	100	150	200	
Low	0111	7 : 1	116	175	233	
Low	1000	8 : 1	133	200	266	
Low	1001	9 : 1	150	225	300	
Low	1010	10 : 1	166	250	333	
Low	1011	11 : 1	183	275		
Low	1100	12 : 1	200	300		
Low	1101	13 : 1	216	325		
Low	1110	14 : 1	233			
Low	1111	15 : 1	250			
Low	0000	16 : 1	266			
High	0010	2 : 1				133
High	0011	3 : 1			100	200
High	0100	4 : 1			133	266
High	0101	5 : 1			166	333
High	0110	6 : 1			200	
High	0111	7 : 1			233	
High	1000	8 : 1				

1 CFG_CLKIN_DIV selects the ratio between CLKIN and PCI_SYNC_OUT.

2 CLKIN is the input clock in host mode; PCI_CLK is the input clock in agent mode.
DDR2 memory may be used at 133 MHz provided that the memory components are specified for operation at this frequency.

Table 58. CSB Frequency Options for Agent Mode

CFG_CLKIN_DIV at Reset[1]	SPMF	*csb_clk* : Input Clock Ratio[2]	Input Clock Frequency (MHz)[2]			
			16.67	25	33.33	66.67
			csb_clk Frequency (MHz)			
Low	0010	2 : 1				133
Low	0011	3 : 1			100	200
Low	0100	4 : 1		100	133	266
Low	0101	5 : 1		125	166	333
Low	0110	6 : 1	100	150	200	
Low	0111	7 : 1	116	175	233	
Low	1000	8 : 1	133	200	266	
Low	1001	9 : 1	150	225	300	
Low	1010	10 : 1	166	250	333	
Low	1011	11 : 1	183	275		
Low	1100	12 : 1	200	300		
Low	1101	13 : 1	216	325		
Low	1110	14 : 1	233			
Low	1111	15 : 1	250			
Low	0000	16 : 1	266			
High	0010	4 : 1		100	133	266
High	0011	6 : 1	100	150	200	
High	0100	8 : 1	133	200	266	
High	0101	10 : 1	166	250	333	
High	0110	12 : 1	200	300		
High	0111	14 : 1	233			
High	1000	16 : 1	266			

1 CFG_CLKIN_DIV doubles csb_clk if set high.

2 CLKIN is the input clock in host mode; PCI_CLK is the input clock in agent mode.
DDR2 memory may be used at 133 MHz provided that the memory components are specified for operation at this frequency.

19.2 Core PLL Configuration

RCWL[COREPLL] selects the ratio between the internal coherent system bus clock (*csb_clk*) and the e300 core clock (*core_clk*). Table 59 shows the encodings for RCWL[COREPLL]. COREPLL values that are not listed in Table 59 should be considered as reserved.

NOTE

Core VCO frequency = core frequency × VCO divider

VCO divider must be set properly so that the core VCO frequency is in the range of 800–1800 MHz.

Table 59. e300 Core PLL Configuration

RCWL[COREPLL]			*core_clk* : *csb_clk* Ratio	VCO Divider[1]
0–1	2–5	6		
nn	0000	n	PLL bypassed (PLL off, *csb_clk* clocks core directly)	PLL bypassed (PLL off, *csb_clk* clocks core directly)
00	0001	0	1:1	2
01	0001	0	1:1	4
10	0001	0	1:1	8
11	0001	0	1:1	8
00	0001	1	1.5:1	2
01	0001	1	1.5:1	4
10	0001	1	1.5:1	8
11	0001	1	1.5:1	8
00	0010	0	2:1	2
01	0010	0	2:1	4
10	0010	0	2:1	8
11	0010	0	2:1	8
00	0010	1	2.5:1	2
01	0010	1	2.5:1	4
10	0010	1	2.5:1	8
11	0010	1	2.5:1	8
00	0011	0	3:1	2
01	0011	0	3:1	4
10	0011	0	3:1	8
11	0011	0	3:1	8

[1] Core VCO frequency = core frequency × VCO divider. The VCO divider must be set properly so that the core VCO frequency is in the range of 800–1800 MHz.

19.3 Suggested PLL Configurations

Table 60 shows suggested PLL configurations for 33 and 66 MHz input clocks.

Table 60. Suggested PLL Configurations

Ref No.[1]	RCWL		400 MHz Device			533 MHz Device			667 MHz Device		
	SPMF	CORE PLL	Input Clock Freq (MHz)[2]	CSB Freq (MHz)	Core Freq (MHz)	Input Clock Freq (MHz)[2]	CSB Freq (MHz)	Core Freq (MHz)	Input Clock Freq (MHz)[2]	CSB Freq (MHz)	Core Freq (MHz)
33 MHz CLKIN/PCI_CLK Options											
922	**1001**	**0100010**	—	—	—	—	—	f300	33	300	300
723	**0111**	**0100011**	33	233	350	33	233	350	33	233	350
604	**0110**	**0000100**	33	200	400	33	200	400	33	200	400
624	**0110**	**0100100**	33	200	400	33	200	400	33	200	400
803	**1000**	**0000011**	33	266	400	33	266	400	33	266	400
823	**1000**	**0100011**	33	266	400	33	266	400	33	266	400
903	**1001**	**0000011**	—			33	300	450	33	300	450
923	**1001**	**0100011**	—			33	300	450	33	300	450
704	**0111**	**0000011**	—			33	233	466	33	233	466
724	**0111**	**0100011**	—			33	233	466	33	233	466
A03	**1010**	**0000011**	—			33	333	500	33	333	500
804	**1000**	**0000100**	—			33	266	533	33	266	533
705	**0111**	**0000101**	—			—			33	233	583
606	**0110**	**0000110**	—			—			33	200	600
904	**1001**	**0000100**	—			—			33	300	600
805	**1000**	**0000101**	—			—			33	266	667
A04	**1010**	**0000100**	—			—			33	333	667
66 MHz CLKIN/PCI_CLK Options											
304	**0011**	**0000100**	66	200	400	66	200	400	66	200	400
324	**0011**	**0100100**	66	200	400	66	200	400	66	200	400
403	**0100**	**0000011**	66	266	400	66	266	400	66	266	400
423	**0100**	**0100011**	66	266	400	66	266	400	66	266	400
305	**0011**	**0000101**	—			66	200	500	66	200	500
503	**0101**	**0000011**	—			66	333	500	66	333	500
404	**0100**	**0000100**	—			66	266	533	66	266	533
306	**0011**	**0000110**	—			—			66	200	600
405	**0100**	**0000101**	—			—			66	266	667
504	**0101**	**0000100**	—			—			66	333	667

1 The PLL configuration reference number is the hexadecimal representation of RCWL, bits 4–15 associated with the SPMF and COREPLL settings given in the table.

2 The input clock is CLKIN for PCI host mode or PCI_CLK for PCI agent mode.

20 Thermal

This section describes the thermal specifications of the MPC8347E.

20.1 Thermal Characteristics

Table 61 provides the package thermal characteristics for the 672 35 × 35 mm TBGA of the MPC8347E.

Table 61. Package Thermal Characteristics for TBGA

Characteristic	Symbol	Value	Unit	Notes
Junction-to-ambient natural convection on single-layer board (1s)	$R_{\theta JA}$	14	°C/W	1, 2
Junction-to-ambient natural convection on four-layer board (2s2p)	$R_{\theta JMA}$	11	°C/W	1, 3
Junction-to-ambient (@ 200 ft/min) on single-layer board (1s)	$R_{\theta JMA}$	11	°C/W	1, 3
Junction-to-ambient (@ 200 ft/min) on four-layer board (2s2p)	$R_{\theta JMA}$	8	°C/W	1, 3
Junction-to-ambient (@ 2 m/s) on single-layer board (1s)	$R_{\theta JMA}$	9	°C/W	1, 3
Junction-to-ambient (@ 2 m/s) on four-layer board (2s2p)	$R_{\theta JMA}$	7	°C/W	1, 3
Junction-to-board thermal	$R_{\theta JB}$	3.8	°C/W	4
Junction-to-case thermal	$R_{\theta JC}$	1.7	°C/W	5
Junction-to-package natural convection on top	Ψ_{JT}	1	°C/W	6

Notes:

1. Junction temperature is a function of die size, on-chip power dissipation, package thermal resistance, mounting site (board) temperature, ambient temperature, air flow, power dissipation of other components on the board, and board thermal resistance.
2. Per SEMI G38-87 and JEDEC JESD51-2 with the single-layer board horizontal.
3. Per JEDEC JESD51-6 with the board horizontal, 1 m/s is approximately equal to 200 linear feet per minute (LFM).
4. Thermal resistance between the die and the printed-circuit board per JEDEC JESD51-8. Board temperature is measured on the top surface of the board near the package.
5. Thermal resistance between the die and the case top surface as measured by the cold plate method (MIL SPEC-883 Method 1012.1).
6. Thermal characterization parameter indicating the temperature difference between package top and the junction temperature per JEDEC JESD51-2. When Greek letters are not available, the thermal characterization parameter is written as Psi-JT.

Table 62 provides the package thermal characteristics for the 620 29 × 29 mm PBGA of the MPC8347E.

Table 62. Package Thermal Characteristics for PBGA

Characteristic	Symbol	Value	Unit	Notes
Junction-to-ambient natural convection on single-layer board (1s)	$R_{\theta JA}$	21	°C/W	1, 2
Junction-to-ambient natural convection on four-layer board (2s2p)	$R_{\theta JMA}$	15	°C/W	1, 3
Junction-to-ambient (@ 200 ft/min) on single-layer board (1s)	$R_{\theta JMA}$	17	°C/W	1, 3
Junction-to-ambient (@ 200 ft/min) on four-layer board (2s2p)	$R_{\theta JMA}$	12	°C/W	1, 3
Junction-to-board thermal	$R_{\theta JB}$	6	°C/W	4

Table 62. Package Thermal Characteristics for PBGA (continued)

Characteristic	Symbol	Value	Unit	Notes
Junction-to-case thermal	$R_{\theta JC}$	5	°C/W	5
Junction-to-package natural convection on top	ψ_{JT}	5	°C/W	6

Notes

1. Junction temperature is a function of die size, on-chip power dissipation, package thermal resistance, mounting site (board) temperature, ambient temperature, air flow, power dissipation of other components on the board, and board thermal resistance.
2. Per SEMI G38-87 and JEDEC JESD51-2 with the single-layer board horizontal.
3. Per JEDEC JESD51-6 with the board horizontal.
4. Thermal resistance between the die and the printed-circuit board per JEDEC JESD51-8. Board temperature is measured on the top surface of the board near the package.
5. Thermal resistance between the die and the case top surface as measured by the cold plate method (MIL SPEC-883 Method 1012.1).
6. Thermal characterization parameter indicating the temperature difference between package top and the junction temperature per JEDEC JESD51-2. When Greek letters are not available, the thermal characterization parameter is written as Psi-JT.

20.2 Thermal Management Information

For the following sections, $P_D = (V_{DD} \times I_{DD}) + P_{I/O}$ where $P_{I/O}$ is the power dissipation of the I/O drivers. See Table 5 for I/O power dissipation values.

20.2.1 Estimation of Junction Temperature with Junction-to-Ambient Thermal Resistance

An estimation of the chip junction temperature, T_J, can be obtained from the equation:

$$T_J = T_A + (R_{\theta JA} \times P_D)$$

where:

T_J = junction temperature (°C)

T_A = ambient temperature for the package (°C)

$R_{\theta JA}$ = junction-to-ambient thermal resistance (°C/W)

P_D = power dissipation in the package (W)

The junction-to-ambient thermal resistance is an industry-standard value that provides a quick and easy estimation of thermal performance. Generally, the value obtained on a single-layer board is appropriate for a tightly packed printed-circuit board. The value obtained on the board with the internal planes is usually appropriate if the board has low power dissipation and the components are well separated. Test cases have demonstrated that errors of a factor of two (in the quantity $T_J - T_A$) are possible.

20.2.2 Estimation of Junction Temperature with Junction-to-Board Thermal Resistance

The thermal performance of a device cannot be adequately predicted from the junction-to-ambient thermal resistance. The thermal performance of any component is strongly dependent on the power dissipation of surrounding components. In addition, the ambient temperature varies widely within the application. For

many natural convection and especially closed box applications, the board temperature at the perimeter (edge) of the package is approximately the same as the local air temperature near the device. Specifying the local ambient conditions explicitly as the board temperature provides a more precise description of the local ambient conditions that determine the temperature of the device.

At a known board temperature, the junction temperature is estimated using the following equation:

$$T_J = T_A + (R_{\theta JA} \times P_D)$$

where:

T_J = junction temperature (°C)
T_A = ambient temperature for the package (°C)
$R_{\theta JA}$ = junction-to-ambient thermal resistance (°C/W)
P_D = power dissipation in the package (W)

When the heat loss from the package case to the air can be ignored, acceptable predictions of junction temperature can be made. The application board should be similar to the thermal test condition: the component is soldered to a board with internal planes.

20.2.3 Experimental Determination of Junction Temperature

To determine the junction temperature of the device in the application after prototypes are available, use the thermal characterization parameter (Ψ_{JT}) to determine the junction temperature and a measure of the temperature at the top center of the package case using the following equation:

$$T_J = T_T + (\Psi_{JT} \times P_D)$$

where:

T_J = junction temperature (°C)
T_T = thermocouple temperature on top of package (°C)
Ψ_{JT} = junction-to-ambient thermal resistance (°C/W)
P_D = power dissipation in the package (W)

The thermal characterization parameter is measured per the JESD51-2 specification using a 40 gauge type T thermocouple epoxied to the top center of the package case. The thermocouple should be positioned so that the thermocouple junction rests on the package. A small amount of epoxy is placed over the thermocouple junction and over about 1 mm of wire extending from the junction. The thermocouple wire is placed flat against the package case to avoid measurement errors caused by cooling effects of the thermocouple wire.

20.2.4 Heat Sinks and Junction-to-Case Thermal Resistance

Some application environments require a heat sink to provide the necessary thermal management of the device. When a heat sink is used, the thermal resistance is expressed as the sum of a junction-to-case thermal resistance and a case-to-ambient thermal resistance:

$$R_{\theta JA} = R_{\theta JC} + R_{\theta CA}$$

where:

$R_{\theta JA}$ = junction-to-ambient thermal resistance (°C/W)

$R_{\theta JC}$ = junction-to-case thermal resistance (°C/W)

$R_{\theta CA}$ = case-to-ambient thermal resistance (°C/W)

$R_{\theta JC}$ is device-related and cannot be influenced by the user. The user controls the thermal environment to change the case-to-ambient thermal resistance, $R_{\theta CA}$. For instance, the user can change the size of the heat sink, the air flow around the device, the interface material, the mounting arrangement on printed-circuit board, or change the thermal dissipation on the printed-circuit board surrounding the device.

The thermal performance of devices with heat sinks has been simulated with a few commercially available heat sinks. The heat sink choice is determined by the application environment (temperature, air flow, adjacent component power dissipation) and the physical space available. Because there is not a standard application environment, a standard heat sink is not required.

Table 63 and Table 64 show heat sink thermal resistance for TBGA and PBGA of the MPC8347E.

Table 63. Heat Sink and Thermal Resistance of MPC8347E (TBGA)

Heat Sink Assuming Thermal Grease	Air Flow	35 × 35 mm TBGA
		Thermal Resistance
AAVID 30 × 30 × 9.4 mm pin fin	Natural convection	10
AAVID 30 × 30 × 9.4 mm pin fin	1 m/s	6.5
AAVID 30 × 30 × 9.4 mm pin fin	2 m/s	5.6
AAVID 31 × 35 × 23 mm pin fin	Natural convection	8.4
AAVID 31 × 35 × 23 mm pin fin	1 m/s	4.7
AAVID 31 × 35 × 23 mm pin fin	2 m/s	4
Wakefield, 53 × 53 × 25 mm pin fin	Natural convection	5.7
Wakefield, 53 × 53 × 25 mm pin fin	1 m/s	3.5
Wakefield, 53 × 53 × 25 mm pin fin	2 m/s	2.7
MEI, 75 × 85 × 12 no adjacent board, extrusion	Natural convection	6.7
MEI, 75 × 85 × 12 no adjacent board, extrusion	1 m/s	4.1
MEI, 75 × 85 × 12 no adjacent board, extrusion	2 m/s	2.8
MEI, 75 × 85 × 12 mm, adjacent board, 40 mm side bypass	1 m/s	3.1

Table 64. Heat Sink and Thermal Resistance of MPC8347E (PBGA)

Heat Sink Assuming Thermal Grease	Air Flow	29 × 29 mm PBGA
		Thermal Resistance
AAVID 30 × 30 × 9.4 mm pin fin	Natural convection	13.5
AAVID 30 × 30 × 9.4 mm pin fin	1 m/s	9.6

Table 64. Heat Sink and Thermal Resistance of MPC8347E (PBGA) (continued)

Heat Sink Assuming Thermal Grease	Air Flow	29 × 29 mm PBGA
		Thermal Resistance
AAVID 30 × 30 × 9.4 mm pin fin	2 m/s	8.8
AAVID 31 × 35 × 23 mm pin fin	Natural convection	11.3
AAVID 31 × 35 × 23 mm pin fin	1 m/s	8.1
AAVID 31 × 35 × 23 mm pin fin	2 m/s	7.5
Wakefield, 53 × 53 × 25 mm pin fin	Natural convection	9.1
Wakefield, 53 × 53 × 25 mm pin fin	1 m/s	7.1
Wakefield, 53 × 53 × 25 mm pin fin	2 m/s	6.5
MEI, 75 × 85 × 12 no adjacent board, extrusion	Natural convection	10.1
MEI, 75 × 85 × 12 no adjacent board, extrusion	1 m/s	7.7
MEI, 75 × 85 × 12 no adjacent board, extrusion	2 m/s	6.6
MEI, 75 × 85 × 12 mm, adjacent board, 40 mm side bypass	1 m/s	6.9

Accurate thermal design requires thermal modeling of the application environment using computational fluid dynamics software which can model both the conduction cooling and the convection cooling of the air moving through the application. Simplified thermal models of the packages can be assembled using the junction-to-case and junction-to-board thermal resistances listed in the thermal resistance table. More detailed thermal models can be made available on request.

Heat sink vendors include the following list:

Aavid Thermalloy 603-224-9988
80 Commercial St.
Concord, NH 03301
Internet: www.aavidthermalloy.com

Alpha Novatech 408-567-8082
473 Sapena Ct. #12
Santa Clara, CA 95054
Internet: www.alphanovatech.com

International Electronic Research Corporation (IERC) 818-842-7277
413 North Moss St.
Burbank, CA 91502
Internet: www.ctscorp.com

Millennium Electronics (MEI) 408-436-8770
Loroco Sites
671 East Brokaw Road
San Jose, CA 95112
Internet: www.mei-thermal.com

Tyco Electronics Chip Coolers™ P.O. Box 3668 Harrisburg, PA 17105-3668 Internet: www.chipcoolers.com	800-522-2800
Wakefield Engineering 33 Bridge St. Pelham, NH 03076 Internet: www.wakefield.com	603-635-5102

Interface material vendors include the following:

Chomerics, Inc. 77 Dragon Ct. Woburn, MA 01801 Internet: www.chomerics.com	781-935-4850
Dow-Corning Corporation Dow-Corning Electronic Materials P.O. Box 994 Midland, MI 48686-0997 Internet: www.dowcorning.com	800-248-2481
Shin-Etsu MicroSi, Inc. 10028 S. 51st St. Phoenix, AZ 85044 Internet: www.microsi.com	888-642-7674
The Bergquist Company 18930 West 78th St. Chanhassen, MN 55317 Internet: www.bergquistcompany.com	800-347-4572

20.3 Heat Sink Attachment

When heat sinks are attached, an interface material is required, preferably thermal grease and a spring clip. The spring clip should connect to the printed-circuit board, either to the board itself, to hooks soldered to the board, or to a plastic stiffener. Avoid attachment forces that can lift the edge of the package or peel the package from the board. Such peeling forces reduce the solder joint lifetime of the package. The recommended maximum force on the top of the package is 10 lb force (4.5 kg force). Any adhesive attachment should attach to painted or plastic surfaces, and its performance should be verified under the application requirements.

20.3.1 Experimental Determination of the Junction Temperature with a Heat Sink

When a heat sink is used, the junction temperature is determined from a thermocouple inserted at the interface between the case of the package and the interface material. A clearance slot or hole is normally

required in the heat sink. Minimize the size of the clearance to minimize the change in thermal performance caused by removing part of the thermal interface to the heat sink. Because of the experimental difficulties with this technique, many engineers measure the heat sink temperature and then back calculate the case temperature using a separate measurement of the thermal resistance of the interface. From this case temperature, the junction temperature is determined from the junction-to-case thermal resistance.

$$T_J = T_C + (R_{\theta JC} \times P_D)$$

where:

T_J = junction temperature (°C)

T_C = case temperature of the package (°C)

$R_{\theta JC}$ = junction-to-case thermal resistance (°C/W)

P_D = power dissipation (W)

21 System Design Information

This section provides electrical and thermal design recommendations for successful application of the MPC8347E.

21.1 System Clocking

The MPC8347E includes two PLLs:

1. The platform PLL generates the platform clock from the externally supplied CLKIN input. The frequency ratio between the platform and CLKIN is selected using the platform PLL ratio configuration bits as described in Section 19.1, “System PLL Configuration.”
2. The e300 core PLL generates the core clock as a slave to the platform clock. The frequency ratio between the e300 core clock and the platform clock is selected using the e300 PLL ratio configuration bits as described in Section 19.2, “Core PLL Configuration.”

21.2 PLL Power Supply Filtering

Each PLL gets power through independent power supply pins ($AV_{DD}1$, $AV_{DD}2$, respectively). The AV_{DD} level should always equal to V_{DD}, and preferably these voltages are derived directly from V_{DD} through a low frequency filter scheme.

There are a number of ways to provide power reliably to the PLLs, but the recommended solution is to provide four independent filter circuits as illustrated in Figure 42, one to each of the four AV_{DD} pins. Independent filters to each PLL reduce the opportunity to cause noise injection from one PLL to the other.

The circuit filters noise in the PLL resonant frequency range from 500 kHz to 10 MHz. It should be built with surface mount capacitors with minimum effective series inductance (ESL). Consistent with the recommendations of Dr. Howard Johnson in *High Speed Digital Design: A Handbook of Black Magic* (Prentice Hall, 1993), multiple small capacitors of equal value are recommended over a single large value capacitor.

To minimize noise coupled from nearby circuits, each circuit should be placed as closely as possible to the specific AV_{DD} pin being supplied. It should be possible to route directly from the capacitors to the AV_{DD} pin, which is on the periphery of package, without the inductance of vias.

Figure 42 shows the PLL power supply filter circuit.

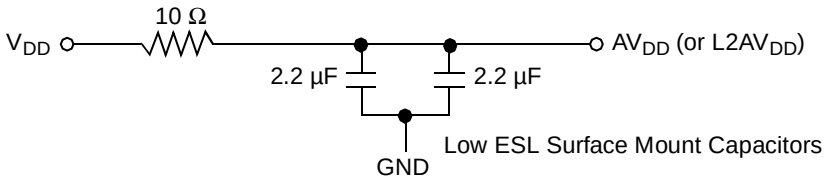

Figure 42. PLL Power Supply Filter Circuit

21.3 Decoupling Recommendations

Due to large address and data buses and high operating frequencies, the MPC8347E can generate transient power surges and high frequency noise in its power supply, especially while driving large capacitive loads. This noise must be prevented from reaching other components in the MPC8347E system, and the MPC8347E itself requires a clean, tightly regulated source of power. Therefore, the system designer should place at least one decoupling capacitor at each V_{DD}, OV_{DD}, GV_{DD}, and LV_{DD} pin of the MPC8347E. These capacitors should receive their power from separate V_{DD}, OV_{DD}, GV_{DD}, LV_{DD}, and GND power planes in the PCB, with short traces to minimize inductance. Capacitors can be placed directly under the device using a standard escape pattern. Others can surround the part.

These capacitors should have a value of 0.01 or 0.1 µF. Only ceramic SMT (surface mount technology) capacitors should be used to minimize lead inductance, preferably 0402 or 0603 sizes.

In addition, distribute several bulk storage capacitors around the PCB, feeding the V_{DD}, OV_{DD}, GV_{DD}, and LV_{DD} planes, to enable quick recharging of the smaller chip capacitors. These bulk capacitors should have a low ESR (equivalent series resistance) rating to ensure the quick response time. They should also be connected to the power and ground planes through two vias to minimize inductance. Suggested bulk capacitors are 100–330 µF (AVX TPS tantalum or Sanyo OSCON).

21.4 Connection Recommendations

To ensure reliable operation, connect unused inputs to an appropriate signal level. Unused active low inputs should be tied to OV_{DD}, GV_{DD}, or LV_{DD} as required. Unused active high inputs should be connected to GND. All NC (no-connect) signals must remain unconnected.

Power and ground connections must be made to all external V_{DD}, GV_{DD}, LV_{DD}, OV_{DD}, and GND pins of the MPC8347E.

21.5 Output Buffer DC Impedance

The MPC8347E drivers are characterized over process, voltage, and temperature. For all buses, the driver is a push-pull single-ended driver type (open drain for I^2C).

To measure Z_0 for the single-ended drivers, an external resistor is connected from the chip pad to OV_{DD} or GND. Then the value of each resistor is varied until the pad voltage is $OV_{DD}/2$ (see Figure 43). The output impedance is the average of two components, the resistances of the pull-up and pull-down devices. When data is held high, SW1 is closed (SW2 is open) and R_P is trimmed until the voltage at the pad equals $OV_{DD}/2$. R_P then becomes the resistance of the pull-up devices. R_P and R_N are designed to be close to each other in value. Then, $Z_0 = (R_P + R_N)/2$.

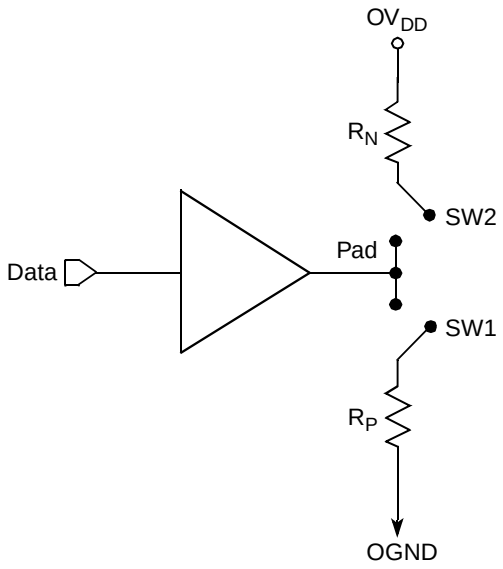

Figure 43. Driver Impedance Measurement

Two measurements give the value of this resistance and the strength of the driver current source. First, the output voltage is measured while driving logic 1 without an external differential termination resistor. The measured voltage is $V_1 = R_{source} \times I_{source}$. Second, the output voltage is measured while driving logic 1 with an external precision differential termination resistor of value R_{term}. The measured voltage is $V_2 = (1/(1/R_1 + 1/R_2)) \times I_{source}$. Solving for the output impedance gives $R_{source} = R_{term} \times (V_1/V_2 - 1)$. The drive current is then $I_{source} = V_1/R_{source}$.

Table 65 summarizes the signal impedance targets. The driver impedance are targeted at minimum V_{DD}, nominal OV_{DD}, 105°C.

Table 65. Impedance Characteristics

Impedance	Local Bus, Ethernet, DUART, Control, Configuration, Power Management	PCI Signals (Not Including PCI Output Clocks)	PCI Output Clocks (Including PCI_SYNC_OUT)	DDR DRAM	Symbol	Unit
R_N	42 Target	25 Target	42 Target	20 Target	Z_0	Ω
R_P	42 Target	25 Target	42 Target	20 Target	Z_0	Ω
Differential	NA	NA	NA	NA	Z_{DIFF}	Ω

Note: Nominal supply voltages. See Table 1, T_j = 105°C.

21.6 Configuration Pin Multiplexing

The MPC8347E power-on configuration options can be set through external pull-up or pull-down resistors of 4.7 kΩ on certain output pins (see the customer-visible configuration pins). These pins are used as output only pins in normal operation.

However, while $\overline{\text{HRESET}}$ is asserted, these pins are treated as inputs, and the value on these pins is latched when $\overline{\text{PORESET}}$ deasserts. Then the input receiver is disabled and the I/O circuit takes on its normal function. Careful board layout with stubless connections to these pull-up/pull-down resistors coupled with

the large value of the pull-up/pull-down resistor should minimize the disruption of signal quality or speed for the output pins.

21.7 Pull-Up Resistor Requirements

The MPC8347E requires high resistance pull-up resistors (10 kΩ is recommended) on open-drain pins, including I^2C pins, the Ethernet Management MDIO pin, and IPIC interrupt pins.

For more information on required pull-up resistors and the connections required for the JTAG interface, refer to application note AN2931, *PowerQUICC™ Design Checklist*.

22 Document Revision History

Table 66 provides a revision history of this document.

Table 66. Document Revision History

Revision	Date	Substantive Change(s)
11	2/2009	In Section 21.1, "System Clocking," removed "(AVDD1)" and "(AVDD2") from bulleted list. In Section 21.2, "PLL Power Supply Filtering," in the second paragraph, changed "provide five independent filter circuits," and "the five AVDD pins" to provide four independent filter circuits," and "the four AVDD pins." In Table 35, removed row for rise time (t_{I2CR}). Removed minimum value of t_{I2CF}. Added note 5 stating that the device does not follow the I2C-BUS Specifications version 2.1 regarding the t_{I2CF} AC parameter. In Table 54, corrected the max csb_clk to 266 MHz. In Table 60, added PLL configurations 903, 923, A03, A23, and 503 for 533 MHz In Table 35, corrected t_{LBKHOV} parametr to t_{LBKLOV} (output data is driven on falling edge of clock in DLL bypass mode). Similarly, made the same correction to Figure 21, Figure 23, and Figure 24 for output signals. Added Figure 1 and Figure 4. In Table 9.2, clarified that AC table is for ULPI only. Added footnote 4 to Table 67. In Table 67, updated note 1 to say the following: "For temperature range = C, processor frequency is up to 667(TBGA) with a platform frequency of 333 and limited to 400 (PBGA) with a platform frequency of 266." Added footnote 10 and 11 to Table 51 and Table 52. In Table 51, Table 52, updated note 11 to say the following: "SEC1_TXD[3] is required an external pull-up resistor. For proper functionality of the device, this pin must be pulled up or actively driven high during a hard reset. No external pull-down resistors are allowed to be attached to this net." Added footnote 6 to Table 7. In Table 7, updated the note 6 to say the following: "The Spread spectrum clocking. Is allowed with 1% input frequency down-spread at maximum 50KHz modulation rate regardless of input frequency." In 8.1.1, removed the note "The potential applied to the input of a GMII, MII, TBI, RGMII, or RTBI receiver may exceed the potential of the receiver power supply (that is, a RGMII driver powered from a 3.6 V supply driving VOH into a RGMII receiver powered from a 2.5-V supply). Tolerance for dissimilar RGMII driver and receiver supply potentials is implicit in these specifications."
10	4/2007	In Table 3, "Output Drive Capability," changed the values in the Output Impedance column and added USB to the seventh row. In Table 54, "Operating Frequencies for TBGA," added column for 400 MHz. In Section 21.7, "Pull-Up Resistor Requirements," deleted last two paragraphs and after first paragraph, added a new paragraph. Deleted Section 21.8, "JTAG Configuration Signals," and Figure 43, "JTAG Interface Connection."
9	3/2007	In Table 54, "Operating Frequencies for TBGA," in the 'Coherent system bus frequency (*csb_clk*)' row, changed the value in the 533 MHz column to 100–333. In Table 60, "Suggested PLL Configurations," under the subhead, '33 MHz CLKIN/PCI_CLK Options,' added row A03 between Ref. No. 724 and 804. Under the subhead '66 MHz CLKIN/PCI_CLK Options,' added row 503 between Ref. No. 305 and 404. For Ref. No. 306, changed the CORE PLL value to 0000110. In Section 23, "Ordering Information," replaced first paragraph and added a note. In Section 23.1, "Part Numbers Fully Addressed by This Document," replaced first paragraph.

Table 66. Document Revision History (continued)

Revision	Date	Substantive Change(s)
8	2/2007	Page 1, updated first paragraph to reflect PowerQUICC II information. Updated note after second paragraph. In the features list in Section 1, "Overview," corrected DDR data rate to show: • 266 MHz for PBGA parts for all silicon revisions • 333 MHz for DDR for TBGA parts for silicon Rev. 1.x In Table 5, "MPC8347E Typical I/O Power Dissipation," added GV_{DD} 1.8-V values for DDR2; added table footnote to designate rates that apply only to the TBGA package. In Figure 43, "JTAG Interface Connection," updated with new figure. In Section 23, "Ordering Information," replicated note from document introduction. In Section 23.1, "Part Numbers Fully Addressed by This Document," replaced third sentence of first paragraph directing customer to product summary page for available frequency configuration parts. Updated back page information.
7	8/2006	Changed all references to revision 2.0 silicon to revision 3.0 silicon. Changed V_{IH} minimum value in Table 36, "JTAG Interface DC Electrical Characteristics," to OV_{DD} – 0.3. In Table 60, "Suggested PLL Configurations," deleted reference-number rows 902 and 703.
6	3/2006	Section 2, "Electrical Characteristics," moved to second section and all other section, table, and figure numbering change accordingly. Table 7, "CLKIN AC Timing Specifications:" Changed max rise and fall time from 1.2 to 2.3. Table 22, "GMII Receive AC Timing Specifications:" Changed min t_{TTKHDX} from 0.5 to 1.0. Table 30, "MII Management AC Timing Specifications:" Changed max value of t_{MDKHDX} from 70 to 170. Table 34, "Local Bus General Timing Parameters—DLL on:" Changed min $t_{LBIVKH2}$ from 1.7 to 2.2. Table 36, "JTAG interface DC Electrical Characteristics:" Changed V_{IH} input high voltage min to 2.0. Table 54, "Operating Frequencies for TBGA:" • Updated TBD values. • Changed maximum coherent system bus frequency for TBGA 667-MHz device to 333 MHz. Table 55, "Operating Frequencies for PBGA:" • Updated TBD values. • Changed PBGA maximum coherent system bus frequency to 266 MHz, and maximum DDR memory bus frequency to 133 MHz. Table 60, "Suggested PLL Configurations": Removed some values from suggested PLL configurations for reference numbers 902, 922, 903, and 923. Table 67, "Part Numbering Nomenclature": Updated TBD values in note 1. Added Table 68, "SVR Settings." Added Section 23.2, "Part Marking."
5	10/2005	In Table 57, updated AAVID 30x30x9.4 mm Pin Fin (natural convection) junction-to-ambient thermal resistance, from 11 to 10.
4	9/2005	Added Table 2, "MPC8347E Typical I/O Power Dissipation."
3	8/2005	Table 1: Updated values for power dissipation that were TBD in Revision 2.
2	5/2005	Table 1: Typical values for power dissipation are changed to TBD. Table 48: Footnote numbering was wrong. THERM0 should have footnote 9 instead of 8.

Table 66. Document Revision History (continued)

Revision	Date	Substantive Change(s)
1	4/2005	Table 1: Addition of note 1 Table 48: Addition of Therm0 (K32) Table 49: Addition of Therm0 (B15)
0	4/2005	Initial release.

23 Ordering Information

This section presents ordering information for the device discussed in this document, and it shows an example of how the parts are marked.

NOTE

The information in this document is accurate for revision 1.1 silicon and earlier. For information on revision 3.0 silicon and later versions (orderable part numbers ending with A or B), see the *MPC8347EA PowerQUICC™ II Pro Integrated Host Processor Hardware Specifications* (Document Order No. MPC8347EAEC).

23.1 Part Numbers Fully Addressed by This Document

Table 67 shows an analysis of the Freescale part numbering nomenclature for the MPC8347E. The individual part numbers correspond to a maximum processor core frequency. Each part number also contains a revision code that refers to the die mask revision number. For available frequency configuration parts including extended temperatures, refer to the MPC8347E product summary page on our website listed on the back cover of this document or, contact your local Freescale sales office.

Table 67. Part Numbering Nomenclature

MPC	*nnnn*	*e*	*t*	*pp*	*aa*	*a*	*r*
Product Code	**Part Identifier**	**Encryption Acceleration**	**Temperature[1] Range**	**Package[2]**	**Processor Frequency[3]**	**Platform Frequency**	**Revision Level**
MPC	8347	Blank = Not included E = included	Blank = 0 to 105°C C = –40 to 105°C	ZU =TBGA VV = PB free TBGA ZQ = PBGA VR = PB Free PBGA	e300 core speed AD = 266 AG = 400 AJ = 533 AL = 667	D = 266 F = 333[4]	Blank = 1.1 or 1.0

Notes:

1. For temperature range = C, processor frequency is limited to 400 (PBGA) with a platform frequency of 266 and up to 667(TBGA)with a platform frequency of 333
2. See Section 18, “Package and Pin Listings,” for more information on available package types.
3. Processor core frequencies supported by parts addressed by this specification only. Not all parts described in this specification support all core frequencies. Additionally, parts addressed by Part Number Specifications may support other maximum core frequencies.
4. ALF marked parts support DDR1 up to 333 MHz (at 333 MHz CSB as the 'F' marking implies) and DDR2 up to 400 MHz (at 200 MHz CSB). AJF marked parts support DDR1 and DDR2 up to 333 MHz (at a CSB of 333 MHz), but DDR2 at 400 MHz (CSB at 200 MHz) is NOT guaranteed.

Table 68 shows the SVR settings by device and package type.

Table 68. SVR Settings

Device	Package	SVR (Rev. 1.0)
MPC8347E	TBGA	8052_0010
MPC8347	TBGA	8053_0010

Table 68. SVR Settings (continued)

MPC8347E	PBGA	8054_0010
MPC8347	PBGA	8055_0010

23.2 Part Marking

Parts are marked as in the example shown in Figure 44.



Notes:
ATWLYYWW is the traceability code.
CCCCC is the country code.
MMMMM is the mask number.
YWWLAZ is the assembly traceability code.

Figure 44. Freescale Part Marking for TBGA or PBGA Devices

THIS PAGE INTENTIONALLY LEFT BLANK

THIS PAGE INTENTIONALLY LEFT BLANK

How to Reach Us:

Home Page:
www.freescale.com

Web Support:
http://www.freescale.com/support

USA/Europe or Locations Not Listed:
Freescale Semiconductor, Inc.
Technical Information Center, EL516
2100 East Elliot Road
Tempe, Arizona 85284
+1-800-521-6274 or
+1-480-768-2130
www.freescale.com/support

Europe, Middle East, and Africa:
Freescale Halbleiter Deutschland GmbH
Technical Information Center
Schatzbogen 7
81829 Muenchen, Germany
+44 1296 380 456 (English)
+46 8 52200080 (English)
+49 89 92103 559 (German)
+33 1 69 35 48 48 (French)
www.freescale.com/support

Japan:
Freescale Semiconductor Japan Ltd.
Headquarters
ARCO Tower 15F
1-8-1, Shimo-Meguro, Meguro-ku
Tokyo 153-0064
Japan
0120 191014 or
+81 3 5437 9125
support.japan@freescale.com

Asia/Pacific:
Freescale Semiconductor Hong Kong Ltd.
Technical Information Center
2 Dai King Street
Tai Po Industrial Estate
Tai Po, N.T., Hong Kong
+800 2666 8080
support.asia@freescale.com

For Literature Requests Only:
Freescale Semiconductor
Literature Distribution Center
P.O. Box 5405
Denver, Colorado 80217
+1-800 441-2447 or
+1-303-675-2140
Fax: +1-303-675-2150
LDCForFreescaleSemiconductor
@hibbertgroup.com

Information in this document is provided solely to enable system and software implementers to use Freescale Semiconductor products. There are no express or implied copyright licenses granted hereunder to design or fabricate any integrated circuits or integrated circuits based on the information in this document.

Freescale Semiconductor reserves the right to make changes without further notice to any products herein. Freescale Semiconductor makes no warranty, representation or guarantee regarding the suitability of its products for any particular purpose, nor does Freescale Semiconductor assume any liability arising out of the application or use of any product or circuit, and specifically disclaims any and all liability, including without limitation consequential or incidental damages. “Typical” parameters which may be provided in Freescale Semiconductor data sheets and/or specifications can and do vary in different applications and actual performance may vary over time. All operating parameters, including “Typicals” must be validated for each customer application by customer’s technical experts. Freescale Semiconductor does not convey any license under its patent rights nor the rights of others. Freescale Semiconductor products are not designed, intended, or authorized for use as components in systems intended for surgical implant into the body, or other applications intended to support or sustain life, or for any other application in which the failure of the Freescale Semiconductor product could create a situation where personal injury or death may occur. Should Buyer purchase or use Freescale Semiconductor products for any such unintended or unauthorized application, Buyer shall indemnify and hold Freescale Semiconductor and its officers, employees, subsidiaries, affiliates, and distributors harmless against all claims, costs, damages, and expenses, and reasonable attorney fees arising out of, directly or indirectly, any claim of personal injury or death associated with such unintended or unauthorized use, even if such claim alleges that Freescale Semiconductor was negligent regarding the design or manufacture of the part.

Freescale™ and the Freescale logo are trademarks of Freescale Semiconductor, Inc. The Power Architecture and Power.org word marks and the Power and Power.org logos and related marks are trademarks and service marks licensed by Power.org. IIEEE 802.3, 802.3u, 802.3x, 802.3z, 802.3ac, 802.11i, and 1149.1 are trademarks or registered trademarks of the Institute of Electrical and Electronics Engineers, Inc. (IEEE). This product is not endorsed or approved by the IEEE. All other product or service names are the property of their respective owners.

© Freescale Semiconductor, Inc., 2005–2009. All rights reserved.

Document Number: MPC8347EEC
Rev. 11
02/2009





Looking for pricing, stock, or lifecycle information?

Click below to explore more details on WIN SOURCE:

- View MPC8347EVRADDB on WIN SOURCE
- NXP / Nexperia Information

Optimize Your Supply Chain with WIN SOURCE Solutions

- Global Sourcing Solution
- Obsolete Management
- Cost Control Management
- Shortage Management
- Alternative Solution
- Excess Inventory Management