WINSOURCE ELECTRONICS

THE DATASHEET OF

ZGDC20-372HP+

20dB DC Pass

High Power Directional Coupler ZGDC20-372HP+

50Ω 20dB 300 to 3700 MHz

The Big Deal

- High Power Handling: 250W
- Low Insertion Loss: 0.15 dB typ.*



CASE STYLE: HT1398-3

Product Overview

The Mini-Circuits ZGDC20-372HP+ broadband high power directional coupler offers excellent performance across a wide range of popular frequency bands. Built using low loss suspended substrate construction, the ZGDC20-372HP+ can pass up to 3A of DC current from input to output and handle up to 250W CW. The rugged sealed construction makes this coupler ideal for use in field applications or remote monitoring sites; however, it is also ideal for high power lab testing.

Key Features

Feature	Advantages
Excellent Insertion Loss , 0.15 dB Typ*	With extremely low insertion loss, this coupler is ideal for critical high power applications.
Ultra High Return Loss, 25 dB Typ	Outstanding Return loss makes this coupler ideal for sensitive power measurement and other signal distribution applications.
High Power Handling, 250W	Up to 250W CW power handling, combined with low insertion loss and excellent VSWR support operation in high power applications such as transmitters, base stations and high power device characterization.
Wide bandwidth	Covering 300-3700 MHz, the ZGDC20-372HP+ covers the most popular Cellular, PCS, DCS, WiMAX, and LTE bands.
Excellent Directivity and Coupling Flatness	Typical 17 dB directivity and ±1.1 dB of Coupling flatness provides accurate signal sampling of forward or reflected power.
Passes DC Current, 3A	Capable of passing 3A current, input to output; this coupler is suited for application using remote antenna control or other remote motorized requirements.

*Does not include coupling loss

Notes
A. Performance and quality attributes and conditions not expressly stated in this specification document are intended to be excluded and do not form a part of this specification document.
B. Electrical specifications and performance data contained in this specification document are based on Mini-Circuit's applicable established test performance criteria and measurement instructions.
C. The parts covered by this specification document are subject to Mini-Circuits standard limited warranty and terms and conditions (collectively, "Standard Terms"); Purchasers of this part are entitled to the rights and benefits contained therein. For a full statement of the Standard Terms and the exclusive rights and remedies thereunder, please visit Mini-Circuits' website at www.minicircuits.com/MCLStore/terms.jsp

20dB DC Pass

High Power Directional Coupler

ZGDC20-372HP+

50Ω Up to 250W 300 to 3700 MHz



Generic photo used for illustration purposes only

CASE STYLE: HT1398-3

Connectors	Model
N-Type	ZGDC20-372HP+

+RoHS Compliant

The +Suffix identifies RoHS Compliance. See our web site for RoHS Compliance methodologies and qualifications

Maximum Ratings

Operating Temperature	-55°C to 100°C
Storage Temperature	-55°C to 100°C
DC Current	3A
Supplied Termination	10W*

*Derate linearly by 0.18W°C from 70°C to 100°C
Permanent damage may occur if any of these limits are exceeded

Coaxial Connections

INPUT	IN
OUTPUT	OUT
COUPLED	CPL
TERMINATION (50Ω), INTERNAL	TERM

Features

- wide frequency range, 300-3700 MHz
- good coupling flatness, ±0.3 dB typ. (600-3700 MHz)
- high directivity, 17 dB typ.
- very good VSWR, 1.06:1 typ.
- high power, up to 250W
- DC current pass through input to output

Applications

- cellular
- lab use
- WiMAX
- PCN
- GSM
- ISM

Outline Drawing

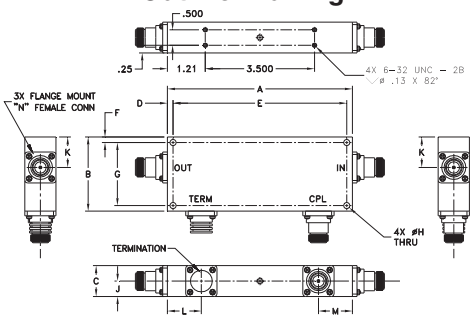

Outline Dimensions (inch / mm)

A	B	C	D	E	F	G
5.93	2.4	1.00	0.18	5.57	0.18	2.04
150.62	60.96	25.40	4.57	141.35	4.57	51.82

H	J	K	L	M	wt
0.2	0.5	0.99	1.09	1.09	grams
5.08	12.70	25.15	27.69	27.69	700

Electrical Specifications at 25°C

Parameter	Frequency (MHz)	Min.	Typ.	Max.	Units
Operating Frequency		**300**		**3700**	MHz
Coupling	300-380	—	23.5±2.0	—	dB
	380-600	—	21.9±2.0	—	
	600-2700	—	20.5±0.7	—	
	2700-3700	—	20.7±0.7	—	
Coupling Flatness	300-380		0.8	±1.5	dB
	380-600	—	1.1	±2.0	
	600-2700	—	0.3	±0.75	
	2700-3700	—	0.1	±0.5	
Mainline Loss[1]	300-380		0.03	0.2	dB
	380-600	—	0.03	0.2	
	600-2700	—	0.08	0.3	
	2700-3700	—	0.15	0.4	
Directivity	300-380	20	36	—	dB
	380-600	20	39	—	
	600-2700	15	28	—	
	2700-3700	14	21	—	
Return Loss	300-380	—	34	—	dB
	380-600	—	38	—	
	600-2700	—	35	—	
	2700-3700	—	31	—	
Input Power [2]	300-380	—	—	250	W
	380-600	—	—	250	
	600-2700	—	—	250	
	2700-3700	—	—	150	

1. Does not include coupling loss.
2. At 25°C with no DC current. Derate linearly to 100W (300-2700 MHz) and to 64W (2700-3700 MHz) from 25°C to 100°C. Output load VSWR 2.0:1 max.

Electrical Schematic

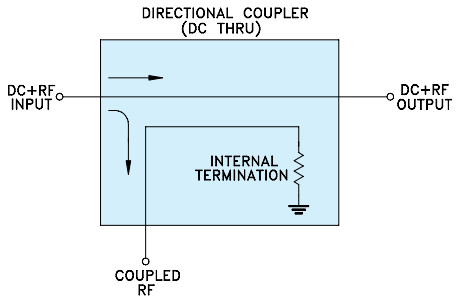

Notes

A. Performance and quality attributes and conditions not expressly stated in this specification document are intended to be excluded and do not form a part of this specification document.
B. Electrical specifications and performance data contained in this specification document are based on Mini-Circuit's applicable established test performance criteria and measurement instructions.
C. The parts covered by this specification document are subject to Mini-Circuits standard limited warranty and terms and conditions (collectively, "Standard Terms"); Purchasers of this part are entitled to the rights and benefits contained therein. For a full statement of the Standard Terms and the exclusive rights and remedies thereunder, please visit Mini-Circuits' website at www.minicircuits.com/MCLStore/terms.jsp

Typical Performance Data

Frequency (MHz)	Mainline Loss [1] (dB) In-Out	Coupling (dB) In-Cpl	Directivity (dB)	Return Loss (dB) In	Out	Cpl
300	0.03	24.40	37.30	29.50	29.50	32.90
380	0.03	22.85	37.96	29.52	29.87	30.17
600	0.04	20.68	55.27	44.16	47.21	29.66
1500	0.08	20.49	23.35	40.43	40.86	25.19
2000	0.10	20.76	20.89	40.64	38.85	28.08
2500	0.12	20.50	16.85	38.01	26.70	25.84
2700	0.14	20.61	17.74	26.68	26.67	29.74
3000	0.14	20.87	19.65	28.83	27.85	22.25
3600	0.17	20.73	16.74	26.71	26.10	29.81
3700	0.18	20.86	17.69	24.63	24.12	24.78
4000	0.20	20.89	19.40	24.02	24.51	20.80

1. Does not include coupling loss.

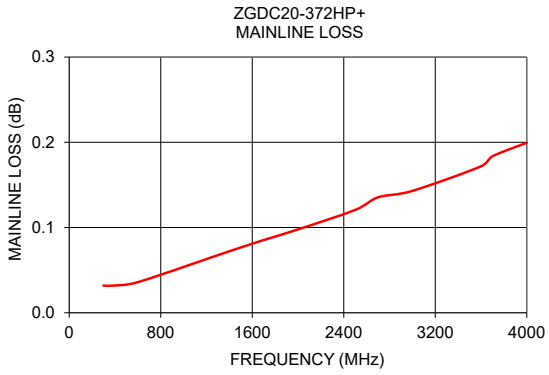

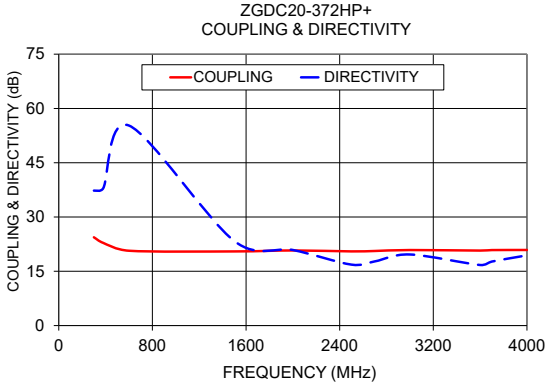

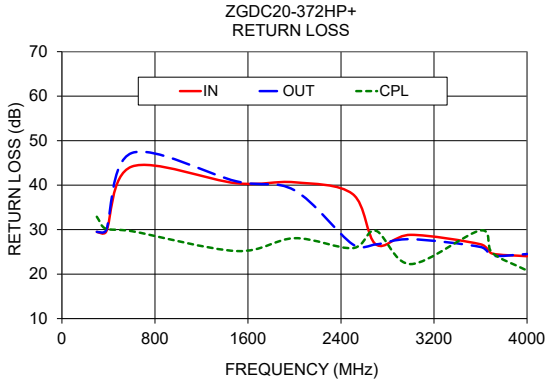

Notes
A. Performance and quality attributes and conditions not expressly stated in this specification document are intended to be excluded and do not form a part of this specification document.
B. Electrical specifications and performance data contained in this specification document are based on Mini-Circuit's applicable established test performance criteria and measurement instructions.
C. The parts covered by this specification document are subject to Mini-Circuits standard limited warranty and terms and conditions (collectively, "Standard Terms"); Purchasers of this part are entitled to the rights and benefits contained therein. For a full statement of the Standard Terms and the exclusive rights and remedies thereunder, please visit Mini-Circuits' website at www.minicircuits.com/MCLStore/terms.jsp

Looking for pricing, stock, or lifecycle information?

Click below to explore more details on WIN SOURCE:

- View ZGDC20-372HP+ on WIN SOURCE
- Mini-Circuits Information

Optimize Your Supply Chain with WIN SOURCE Solutions

- Global Sourcing Solution
- Obsolete Management
- Cost Control Management
- Shortage Management
- Alternative Solution
- Excess Inventory Management