THE DATASHEET OF

PIC18F4320T-I/PT

www.win-source.net 0086-755-83957316



PIC18F2220/2320/4220/4320
Data Sheet

28/40/44-Pin High-Performance, Enhanced Flash Microcontrollers with 10-Bit A/D and nanoWatt Technology

© 2007 Microchip Technology Inc.

Note the following details of the code protection feature on Microchip devices:

- Microchip products meet the specification contained in their particular Microchip Data Sheet.
- Microchip believes that its family of products is one of the most secure families of its kind on the market today, when used in the intended manner and under normal conditions.
- There are dishonest and possibly illegal methods used to breach the code protection feature. All of these methods, to our knowledge, require using the Microchip products in a manner outside the operating specifications contained in Microchip's Data Sheets. Most likely, the person doing so is engaged in theft of intellectual property.
- Microchip is willing to work with the customer who is concerned about the integrity of their code.
- Neither Microchip nor any other semiconductor manufacturer can guarantee the security of their code. Code protection does not mean that we are guaranteeing the product as "unbreakable."

Code protection is constantly evolving. We at Microchip are committed to continuously improving the code protection features of our products. Attempts to break Microchip's code protection feature may be a violation of the Digital Millennium Copyright Act. If such acts allow unauthorized access to your software or other copyrighted work, you may have a right to sue for relief under that Act.

Information contained in this publication regarding device applications and the like is provided only for your convenience and may be superseded by updates. It is your responsibility to ensure that your application meets with your specifications. MICROCHIP MAKES NO REPRESENTATIONS OR WARRANTIES OF ANY KIND WHETHER EXPRESS OR IMPLIED, WRITTEN OR ORAL, STATUTORY OR OTHERWISE, RELATED TO THE INFORMATION, INCLUDING BUT NOT LIMITED TO ITS CONDITION, QUALITY, PERFORMANCE, MERCHANTABILITY OR FITNESS FOR PURPOSE**.** Microchip disclaims all liability arising from this information and its use. Use of Microchip devices in life support and/or safety applications is entirely at the buyer's risk, and the buyer agrees to defend, indemnify and hold harmless Microchip from any and all damages, claims, suits, or expenses resulting from such use. No licenses are conveyed, implicitly or otherwise, under any Microchip intellectual property rights.

Trademarks

The Microchip name and logo, the Microchip logo, Accuron, dsPIC, KEELOQ, KEELOQ logo, microID, MPLAB, PIC, PICmicro, PICSTART, PRO MATE, rfPIC and SmartShunt are registered trademarks of Microchip Technology Incorporated in the U.S.A. and other countries.

AmpLab, FilterLab, Linear Active Thermistor, Migratable Memory, MXDEV, MXLAB, SEEVAL, SmartSensor and The Embedded Control Solutions Company are registered trademarks of Microchip Technology Incorporated in the U.S.A.

Analog-for-the-Digital Age, Application Maestro, CodeGuard, dsPICDEM, dsPICDEM.net, dsPICworks, dsSPEAK, ECAN, ECONOMONITOR, FanSense, FlexROM, fuzzyLAB, In-Circuit Serial Programming, ICSP, ICEPIC, Mindi, MiWi, MPASM, MPLAB Certified logo, MPLIB, MPLINK, PICkit, PICDEM, PICDEM.net, PICLAB, PICtail, PowerCal, PowerInfo, PowerMate, PowerTool, REAL ICE, rfLAB, Select Mode, Smart Serial, SmartTel, Total Endurance, UNI/O, WiperLock and ZENA are trademarks of Microchip Technology Incorporated in the U.S.A. and other countries.

SQTP is a service mark of Microchip Technology Incorporated in the U.S.A.

All other trademarks mentioned herein are property of their respective companies.

© 2007, Microchip Technology Incorporated, Printed in the U.S.A., All Rights Reserved.

Printed on recycled paper.

QUALITY MANAGEMENT SYSTEM
CERTIFIED BY DNV
ISO/TS 16949:2002

Microchip received ISO/TS-16949:2002 certification for its worldwide headquarters, design and wafer fabrication facilities in Chandler and Tempe, Arizona; Gresham, Oregon and design centers in California and India. The Company's quality system processes and procedures are for its PIC® MCUs and dsPIC® DSCs, KEELOQ® code hopping devices, Serial EEPROMs, microperipherals, nonvolatile memory and analog products. In addition, Microchip's quality system for the design and manufacture of development systems is ISO 9001:2000 certified.

© 2007 Microchip Technology Inc.

MICROCHIP PIC18F2220/2320/4220/4320

28/40/44-Pin High-Performance, Enhanced Flash MCUs with 10-Bit A/D and nanoWatt Technology

Low-Power Features:

- Power-Managed modes:
  - Run: CPU on, peripherals on
  - Idle: CPU off, peripherals on
  - Sleep: CPU off, peripherals off
- Power Consumption modes:
  - PRI_RUN: 150 μA, 1 MHz, 2V
  - PRI_IDLE: 37 μA, 1 MHz, 2V
  - SEC_RUN: 14 μA, 32 kHz, 2V
  - SEC_IDLE: 5.8 μA, 32 kHz, 2V
  - RC_RUN: 110 μA, 1 MHz, 2V
  - RC_IDLE: 52 μA, 1 MHz, 2V
  - Sleep: 0.1 μA, 1 MHz, 2V
- Timer1 Oscillator: 1.1 μA, 32 kHz, 2V
- Watchdog Timer: 2.1 μA
- Two-Speed Oscillator Start-up

Oscillators:

- Four Crystal modes:
  - LP, XT, HS: up to 25 MHz
  - HSPLL: 4-10 MHz (16-40 MHz internal)
- Two External RC modes, Up to 4 MHz
- Two External Clock modes, Up to 40 MHz
- Internal Oscillator Block:
  - 8 user-selectable frequencies: 31 kHz, 125 kHz, 250 kHz, 500 kHz, 1 MHz, 2 MHz, 4 MHz, 8 MHz
  - 125 kHz-8 MHz calibrated to 1%
  - Two modes select one or two I/O pins
  - OSCTUNE – Allows user to shift frequency
- Secondary Oscillator using Timer1 @ 32 kHz
- Fail-Safe Clock Monitor
  - Allows for safe shutdown if peripheral clock stops

Peripheral Highlights:

- High-Current Sink/Source 25 mA/25 mA
- Three External Interrupts
- Up to 2 Capture/Compare/PWM (CCP) modules:
  - Capture is 16-bit, max. resolution is 6.25 ns (TCY/16)
  - Compare is 16-bit, max. resolution is 100 ns (TCY)
  - PWM output: PWM resolution is 1 to 10-bit
- Enhanced Capture/Compare/PWM (ECCP) module:
  - One, two or four PWM outputs
  - Selectable polarity
  - Programmable dead time
  - Auto-Shutdown and Auto-Restart
- Compatible 10-Bit, Up to 13-Channel Analog-to-Digital Converter (A/D) module with Programmable Acquisition Time
- Dual Analog Comparators
- Addressable USART module:
  - RS-232 operation using internal oscillator block (no external crystal required)

Special Microcontroller Features:

- 100,000 Erase/Write Cycle Enhanced Flash Program Memory Typical
- 1,000,000 Erase/Write Cycle Data EEPROM Memory Typical
- Flash/Data EEPROM Retention: > 40 Years
- Self-Programmable under Software Control
- Priority Levels for Interrupts
- 8 x 8 Single-Cycle Hardware Multiplier
- Extended Watchdog Timer (WDT):
  - Programmable period from 41 ms to 131s
  - 2% stability over VDD and Temperature
- Single-Supply 5V In-Circuit Serial Programming™ (ICSP™) via Two Pins
- In-Circuit Debug (ICD) via Two Pins
- Wide Operating Voltage Range: 2.0V to 5.5V

Device	Program Memory		Data Memory		I/O	10-Bit A/D (ch)	CCP/ ECCP (PWM)	MSSP		USART	Comparators	Timers 8/16-bit
	Flash (bytes)	# Single Word Instructions	SRAM (bytes)	EEPROM (bytes)				SPI	Master I²C™			
PIC18F2220	4096	2048	512	256	25	10	2/0	Y	Y	Y	2	2/3
PIC18F2320	8192	4096	512	256	25	10	2/0	Y	Y	Y	2	2/3
PIC18F4220	4096	2048	512	256	36	13	1/1	Y	Y	Y	2	2/3
PIC18F4320	8192	4096	512	256	36	13	1/1	Y	Y	Y	2	2/3

© 2007 Microchip Technology Inc.

Pin Diagrams

28-Pin SPDIP, SOIC

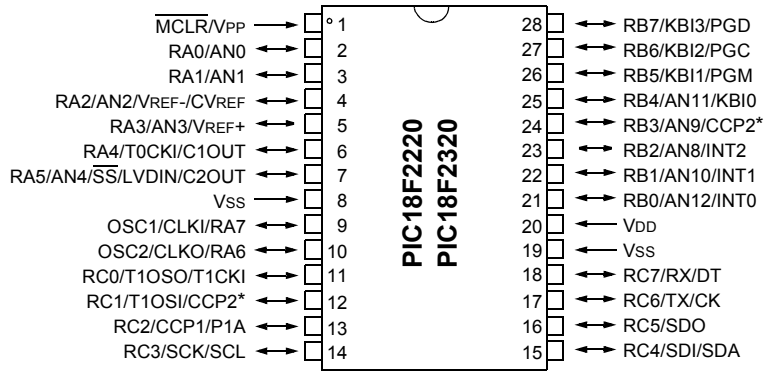

40-Pin PDIP

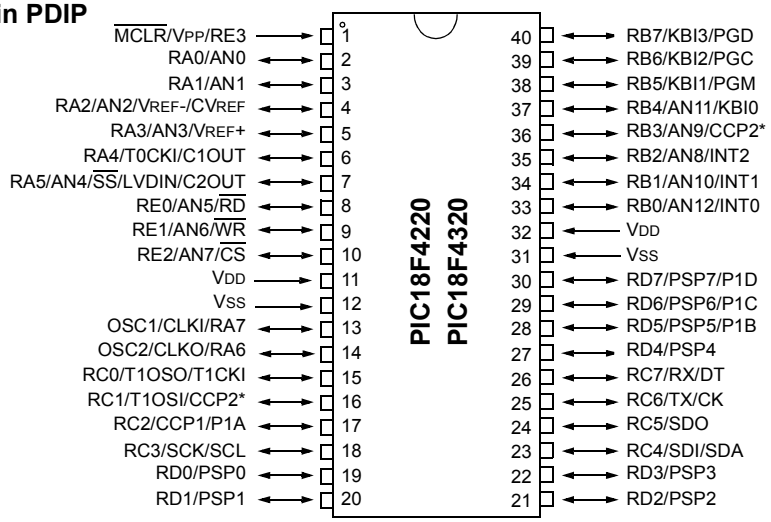

* RB3 is the alternate pin for the CCP2 pin multiplexing.

Note: Pin compatible with 40-pin PIC16C7X devices.

© 2007 Microchip Technology Inc.

Pin Diagrams (Cont.'d)

44-Pin TQFP

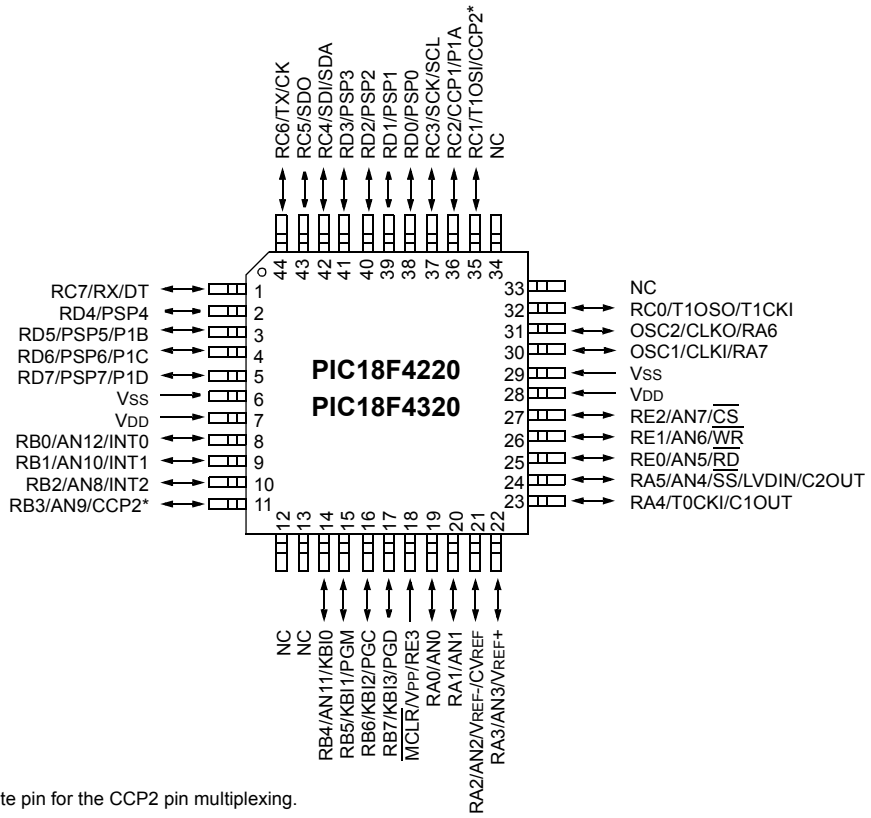

* RB3 is the alternate pin for the CCP2 pin multiplexing.

44-Pin QFN

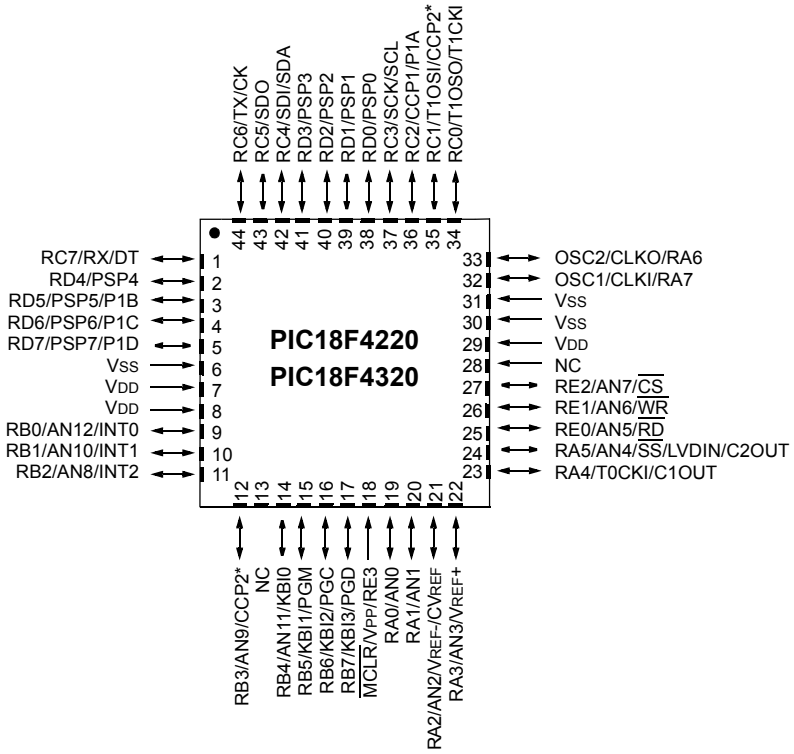

* RB3 is the alternate pin for the CCP2 pin multiplexing.

Table of Contents

1.0 Device Overview 7
2.0 Oscillator Configurations 19
3.0 Power-Managed Modes 29
4.0 Reset 43
5.0 Memory Organization 53
6.0 Flash Program Memory 71
7.0 Data EEPROM Memory 81
8.0 8 X 8 Hardware Multiplier 85
9.0 Interrupts 87
10.0 I/O Ports 101
11.0 Timer0 Module 117
12.0 Timer1 Module 121
13.0 Timer2 Module 127
14.0 Timer3 Module 129
15.0 Capture/Compare/PWM (CCP) Modules 133
16.0 Enhanced Capture/Compare/PWM (ECCP) Module 141
17.0 Master Synchronous Serial Port (MSSP) Module 155
18.0 Addressable Universal Synchronous Asynchronous Receiver Transmitter (USART) 195
19.0 10-bit Analog-to-Digital Converter (A/D) Module 211
20.0 Comparator Module 221
21.0 Comparator Voltage Reference Module 227
22.0 Low-Voltage Detect 231
23.0 Special Features of the CPU 237
24.0 Instruction Set Summary 257
25.0 Development Support 301
26.0 Electrical Characteristics 305
27.0 DC and AC Characteristics Graphs and Tables 347
28.0 Packaging Information 365
Appendix A: Revision History 375
Appendix B: Device Differences 376
Appendix C: Conversion Considerations 377
Appendix D: Migration from Baseline to Enhanced Devices 377
Appendix E: Migration from Mid-range to Enhanced Devices 378
Appendix F: Migration from High-End to Enhanced Devices 378
Index 379
The Microchip Web Site 389
Customer Change Notification Service 389
Customer Support 389
Reader Response 390
PIC18F2220/2320/4220/4320 Product Identification System 391

© 2007 Microchip Technology Inc.

TO OUR VALUED CUSTOMERS

It is our intention to provide our valued customers with the best documentation possible to ensure successful use of your Microchip products. To this end, we will continue to improve our publications to better suit your needs. Our publications will be refined and enhanced as new volumes and updates are introduced.

If you have any questions or comments regarding this publication, please contact the Marketing Communications Department via E-mail at **docerrors@mail.microchip.com** or fax the **Reader Response Form** in the back of this data sheet to (480) 792-4150. We welcome your feedback.

Most Current Data Sheet

To obtain the most up-to-date version of this data sheet, please register at our Worldwide Web site at:

http://www.microchip.com

You can determine the version of a data sheet by examining its literature number found on the bottom outside corner of any page. The last character of the literature number is the version number, (e.g., DS30000A is version A of document DS30000).

Errata

An errata sheet, describing minor operational differences from the data sheet and recommended workarounds, may exist for current devices. As device/documentation issues become known to us, we will publish an errata sheet. The errata will specify the revision of silicon and revision of document to which it applies.

To determine if an errata sheet exists for a particular device, please check with one of the following:

- Microchip's Worldwide Web site; http://www.microchip.com
- Your local Microchip sales office (see last page)
- The Microchip Corporate Literature Center; U.S. FAX: (480) 792-7277

When contacting a sales office or the literature center, please specify which device, revision of silicon and data sheet (include literature number) you are using.

Customer Notification System

Register on our web site at **www.microchip.com/cn** to receive the most current information on all of our products.

NOTES:

© 2007 Microchip Technology Inc.

1.0 DEVICE OVERVIEW

This document contains device-specific information for the following devices:

- PIC18F2220
- PIC18F2320
- PIC18F4220
- PIC18F4320

This family offers the advantages of all PIC18 microcontrollers – namely, high computational performance at an economical price with the addition of high-endurance Enhanced Flash program memory. On top of these features, the PIC18F2220/2320/4220/4320 family introduces design enhancements that make these microcontrollers a logical choice for many high-performance, power sensitive applications.

1.1 New Core Features

1.1.1 nanoWatt TECHNOLOGY

All of the devices in the PIC18F2220/2320/4220/4320 family incorporate a range of features that can significantly reduce power consumption during operation. Key items include:

- **Alternate Run Modes:** By clocking the controller from the Timer1 source or the internal oscillator block, power consumption during code execution can be reduced by as much as 90%.
- **Multiple Idle Modes:** The controller can also run with its CPU core disabled, but the peripherals are still active. In these states, power consumption can be reduced even further, to as little as 4%, of normal operation requirements.
- **On-the-Fly Mode Switching:** The power-managed modes are invoked by user code during operation, allowing the user to incorporate power-saving ideas into their application's software design.
- **Lower Consumption in Key Modules:** The power requirements for both Timer1 and the Watchdog Timer have been reduced by up to 80%, with typical values of 1.8 and 2.2 μA, respectively.

1.1.2 MULTIPLE OSCILLATOR OPTIONS AND FEATURES

All of the devices in the PIC18F2220/2320/4220/4320 family offer nine different oscillator options, allowing users a wide range of choices in developing application hardware. These include:

- Four Crystal modes using crystals or ceramic resonators.
- Two External Clock modes offering the option of using two pins (oscillator input and a divide-by-4 clock output) or one pin (oscillator input with the second pin reassigned as general I/O).
- Two External RC Oscillator modes with the same pin options as the External Clock modes.
- An internal oscillator block, which provides a 31 kHz INTRC clock and an 8 MHz clock with 6 program selectable divider ratios (4 MHz to 125 kHz) for a total of 8 clock frequencies.

Besides its availability as a clock source, the internal oscillator block provides a stable reference source that gives the family additional features for robust operation:

- **Fail-Safe Clock Monitor:** This option constantly monitors the main clock source against a reference signal provided by the internal oscillator. If a clock failure occurs, the controller is switched to the internal oscillator block, allowing for continued low-speed operation or a safe application shutdown.
- **Two-Speed Start-up:** This option allows the internal oscillator to serve as the clock source from Power-on Reset, or wake-up from Sleep mode, until the primary clock source is available. This allows for code execution during what would otherwise be the clock start-up interval and can even allow an application to perform routine background activities and return to Sleep without returning to full power operation.

1.2 Other Special Features

- **Memory Endurance:** The Enhanced Flash cells for both program memory and data EEPROM are rated to last for many thousands of erase/write cycles – up to 100,000 for program memory and 1,000,000 for EEPROM. Data retention without refresh is conservatively estimated to be greater than 40 years.
- **Self-Programmability:** These devices can write to their own program memory spaces under internal software control. By using a bootloader routine located in the protected Boot Block at the top of program memory, it becomes possible to create an application that can update itself in the field.
- **Enhanced CCP Module:** In PWM mode, this module provides 1, 2 or 4 modulated outputs for controlling half-bridge and full-bridge drivers. Other features include Auto-Shutdown for disabling PWM outputs on interrupt or other select conditions and Auto-Restart to reactivate outputs once the condition has cleared.
- **Addressable USART:** This serial communication module is capable of standard RS-232 operation using the internal oscillator block, removing the need for an external crystal (and its accompanying power requirement) in applications that talk to the outside world.
- **10-Bit A/D Converter:** This module incorporates programmable acquisition time, allowing for a channel to be selected and a conversion to be initiated without waiting for a sampling period and thus, reduce code overhead.
- **Extended Watchdog Timer (WDT):** This enhanced version incorporates a 16-bit prescaler, allowing a time-out range from 4 ms to over 2 minutes, that is stable across operating voltage and temperature.

1.3 Details on Individual Family Members

Devices in the PIC18F2220/2320/4220/4320 family are available in 28-pin (PIC18F2X20) and 40/44-pin (PIC18F4X20) packages. Block diagrams for the two groups are shown in Figure 1-1 and Figure 1-2.

The devices are differentiated from each other in five ways:

1. Flash program memory (4 Kbytes for PIC18FX220 devices, 8 Kbytes for PIC18FX320)
2. A/D channels (10 for PIC18F2X20 devices, 13 for PIC18F4X20 devices)
3. I/O ports (3 bidirectional ports and 1 input only port on PIC18F2X20 devices, 5 bidirectional ports on PIC18F4X20 devices)
4. CCP and Enhanced CCP implementation (PIC18F2X20 devices have 2 standard CCP modules, PIC18F4X20 devices have one standard CCP module and one ECCP module)
5. Parallel Slave Port (present only on PIC18F4X20 devices)

All other features for devices in this family are identical. These are summarized in Table 1-1.

The pinouts for all devices are listed in Table 1-2 and Table 1-3.

TABLE 1-1: DEVICE FEATURES

Features	PIC18F2220	PIC18F2320	PIC18F4220	PIC18F4320
Operating Frequency	DC – 40 MHz	DC – 40 MHz	DC – 40 MHz	DC – 40 MHz
Program Memory (Bytes)	4096	8192	4096	8192
Program Memory (Instructions)	2048	4096	2048	4096
Data Memory (Bytes)	512	512	512	512
Data EEPROM Memory (Bytes)	256	256	256	256
Interrupt Sources	19	19	20	20
I/O Ports	Ports A, B, C (E)	Ports A, B, C (E)	Ports A, B, C, D, E	Ports A, B, C, D, E
Timers	4	4	4	4
Capture/Compare/PWM Modules	2	2	1	1
Enhanced Capture/ Compare/PWM Modules	0	0	1	1
Serial Communications	MSSP, Addressable USART	MSSP, Addressable USART	MSSP, Addressable USART	MSSP, Addressable USART
Parallel Communications (PSP)	No	No	Yes	Yes
10-Bit Analog-to-Digital Module	10 Input Channels	10 Input Channels	13 Input Channels	13 Input Channels
Resets (and Delays)	POR, BOR, RESET Instruction, Stack Full, Stack Underflow (PWRT, OST), MCLR (optional), WDT	POR, BOR, RESET Instruction, Stack Full, Stack Underflow (PWRT, OST), MCLR (optional), WDT	POR, BOR, RESET Instruction, Stack Full, Stack Underflow (PWRT, OST), MCLR (optional), WDT	POR, BOR, RESET Instruction, Stack Full, Stack Underflow (PWRT, OST), MCLR (optional), WDT
Programmable Low-Voltage Detect	Yes	Yes	Yes	Yes
Programmable Brown-out Reset	Yes	Yes	Yes	Yes
Instruction Set	75 Instructions	75 Instructions	75 Instructions	75 Instructions
Packages	28-Pin SPDIP 28-Pin SOIC	28-Pin SPDIP 28-Pin SOIC	40-Pin PDIP 44-Pin TQFP 44-Pin QFN	40-Pin PDIP 44-Pin TQFP 44-Pin QFN

© 2007 Microchip Technology Inc.

FIGURE 1-1: PIC18F2220/2320 BLOCK DIAGRAM

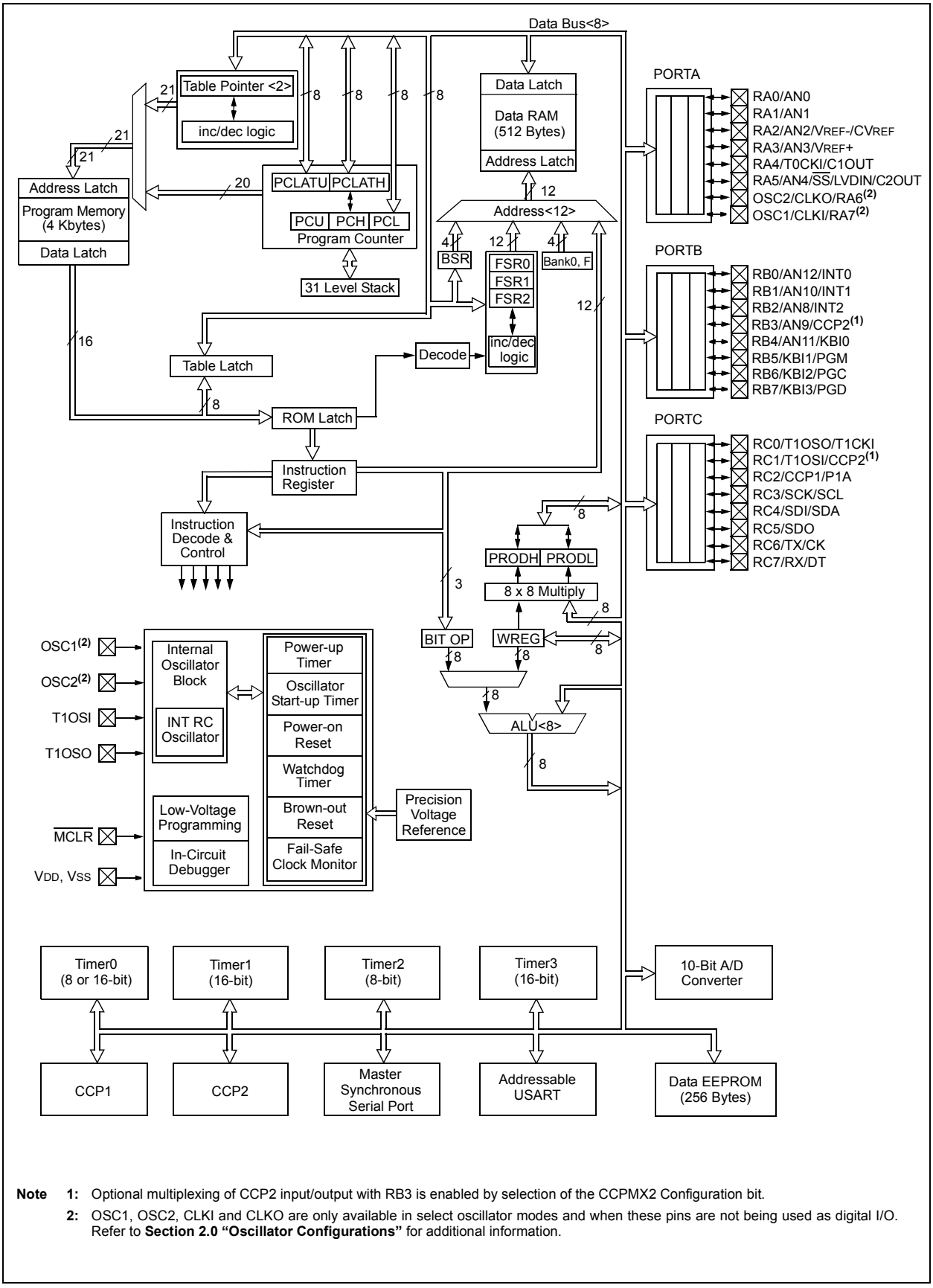

Note 1: Optional multiplexing of CCP2 input/output with RB3 is enabled by selection of the CCPMX2 Configuration bit.

2: OSC1, OSC2, CLKI and CLKO are only available in select oscillator modes and when these pins are not being used as digital I/O. Refer to **Section 2.0 "Oscillator Configurations"** for additional information.

FIGURE 1-2: PIC18F4220/4320 BLOCK DIAGRAM

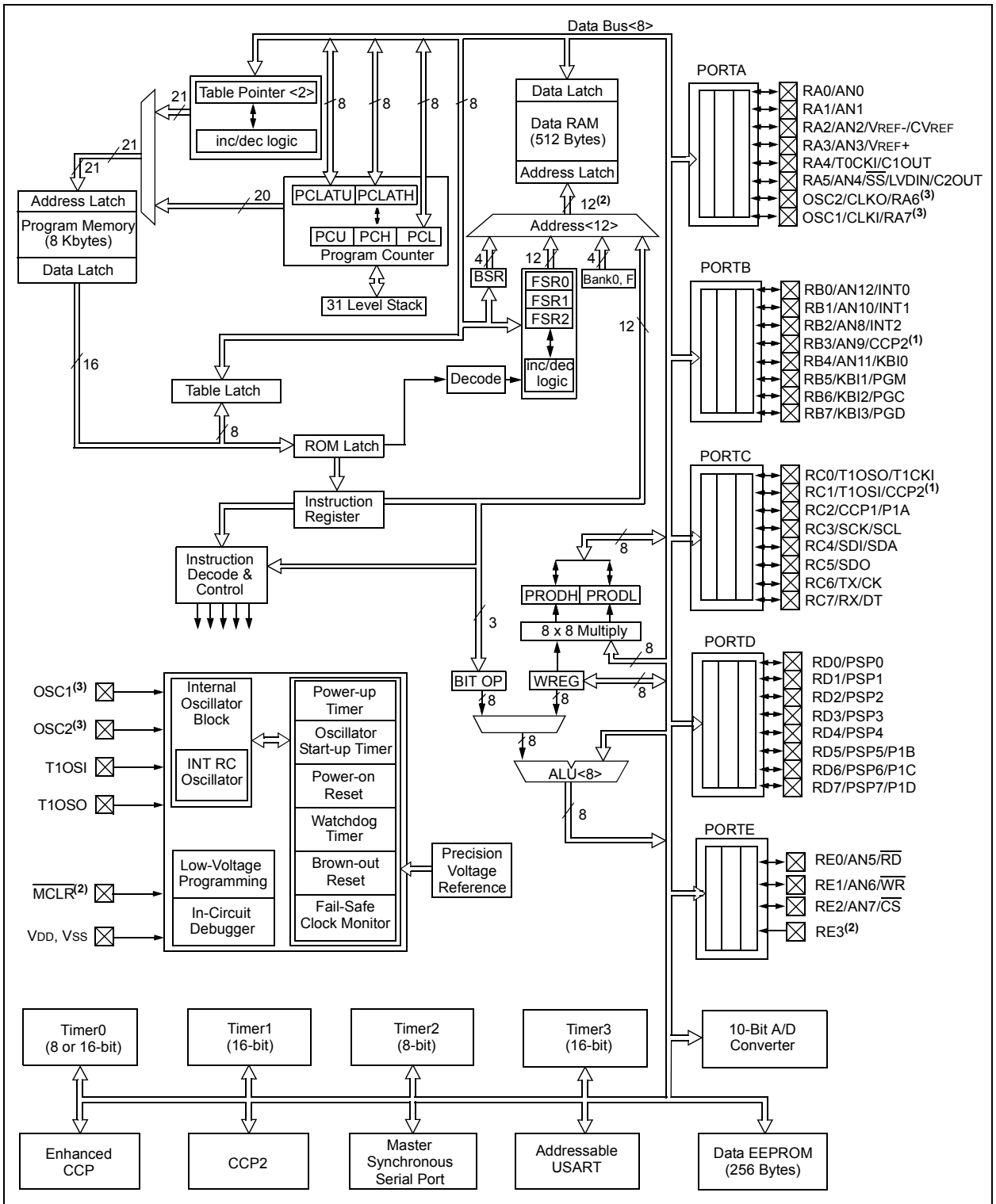

Note 1: Optional multiplexing of CCP2 input/output with RB3 is enabled by selection of the CCP2MX Configuration bit.

2: RE3 is available only when the MCLR Resets are disabled.

3: OSC1, OSC2, CLKI and CLKO are only available in select oscillator modes and when these pins are not being used as digital I/O. Refer to **Section 2.0 "Oscillator Configurations"** for additional information.

© 2007 Microchip Technology Inc.

TABLE 1-2: PIC18F2220/2320 PINOUT I/O DESCRIPTIONS

Pin Name	Pin Number		Pin Type	Buffer Type	Description
	PDIP	SOIC			
MCLR/VPP	1	1			Master Clear (input) or programming voltage (input).
MCLR			I	ST	Master Clear (Reset) input. This pin is an active-low Reset to the device.
VPP			P		Programming voltage input.
OSC1/CLKI/RA7	9	9			Oscillator crystal or external clock input.
OSC1			I	ST	Oscillator crystal input or external clock source input. ST buffer when configured in RC mode, CMOS otherwise.
CLKI			I	CMOS	External clock source input. Always associated with pin function OSC1. (See related OSC1/CLKI, OSC2/CLKO pins.)
RA7			I/O	TTL	General purpose I/O pin.
OSC2/CLKO/RA6	10	10			Oscillator crystal or clock output.
OSC2			O	—	Oscillator crystal output. Connects to crystal or resonator in Crystal Oscillator mode.
CLKO			O	—	In RC mode, OSC2 pin outputs CLKO which has 1/4 the frequency of OSC1 and denotes the instruction cycle rate.
RA6			I/O	TTL	General purpose I/O pin.
					PORTA is a bidirectional I/O port.
RA0/AN0	2	2			
RA0			I/O	TTL	Digital I/O.
AN0			I	Analog	Analog input 0.
RA1/AN1	3	3			
RA1			I/O	TTL	Digital I/O.
AN1			I	Analog	Analog input 1.
RA2/AN2/VREF-/CVREF	4	4			
RA2			I/O	TTL	Digital I/O.
AN2			I	Analog	Analog input 2.
VREF-			I	Analog	A/D reference voltage (low) input.
CVREF			O	Analog	Comparator reference voltage output.
RA3/AN3/VREF+	5	5			
RA3			I/O	TTL	Digital I/O.
AN3			I	Analog	Analog input 3.
VREF+			I	Analog	A/D reference voltage (high) input.
RA4/T0CKI/C1OUT	6	6			
RA4			I/O	ST/OD	Digital I/O. Open drain when configured as output.
T0CKI			I	ST	Timer0 external clock input.
C1OUT			O	—	Comparator 1 output.
RA5/AN4/SS/LVDIN/C2OUT	7	7			
RA5			I/O	TTL	Digital I/O.
AN4			I	Analog	Analog input 4.
SS			I	TTL	SPI slave select input.
LVDIN			I	Analog	Low-Voltage Detect input.
C2OUT			O	—	Comparator 2 output.
RA6					See the OSC2/CLKO/RA6 pin.
RA7					See the OSC1/CLKI/RA7 pin.

Legend: TTL = TTL compatible input; CMOS = CMOS compatible input or output; ST = Schmitt Trigger input with CMOS levels; I = Input; O = Output; P = Power; OD = Open-drain (no diode to VDD)

Note 1: Alternate assignment for CCP2 when CCP2MX is cleared.

2: Default assignment for CCP2 when CCP2MX (CONFIG3H<0>) is set.

TABLE 1-2: PIC18F2220/2320 PINOUT I/O DESCRIPTIONS (CONTINUED)

Pin Name	Pin Number		Pin Type	Buffer Type	Description
	PDIP	SOIC			
					PORTB is a bidirectional I/O port. PORTB can be software programmed for internal weak pull-ups on all inputs.
RB0/AN12/INT0	21	21			
RB0			I/O	TTL	Digital I/O.
AN12			I	Analog	Analog input 12.
INT0			I	ST	External interrupt 0.
RB1/AN10/INT1	22	22			
RB1			I/O	TTL	Digital I/O.
AN10			I	Analog	Analog input 10.
INT1			I	ST	External interrupt 1.
RB2/AN8/INT2	23	23			
RB2			I/O	TTL	Digital I/O.
AN8			I	Analog	Analog input 8.
INT2			I	ST	External interrupt 2.
RB3/AN9/CCP2	24	24			
RB3			I/O	TTL	Digital I/O.
AN9			I	Analog	Analog input 9.
CCP2(1)			I/O	ST	Capture 2 input, Compare 2 output, PWM2 output.
RB4/AN11/KBI0	25	25			
RB4			I/O	TTL	Digital I/O.
AN11			I	Analog	Analog input 11.
KBI0			I	TTL	Interrupt-on-change pin.
RB5/KBI1/PGM	26	26			
RB5			I/O	TTL	Digital I/O.
KBI1			I	TTL	Interrupt-on-change pin.
PGM			I/O	ST	Low-voltage ICSP™ programming enable pin.
RB6/KBI2/PGC	27	27			
RB6			I/O	TTL	Digital I/O.
KBI2			I	TTL	Interrupt-on-change pin.
PGC			I/O	ST	In-Circuit Debugger and ICSP programming clock pin.
RB7/KBI3/PGD	28	28			
RB7			I/O	TTL	Digital I/O.
KBI3			I	TTL	Interrupt-on-change pin.
PGD			I/O	ST	In-Circuit Debugger and ICSP programming data pin.

Legend: TTL = TTL compatible input
CMOS = CMOS compatible input or output
ST = Schmitt Trigger input with CMOS levels
I = Input
O = Output
P = Power
OD = Open-drain (no diode to V_{DD})

Note 1: Alternate assignment for CCP2 when CCP2MX is cleared.

2: Default assignment for CCP2 when CCP2MX (CONFIG3H<0>) is set.

© 2007 Microchip Technology Inc.

TABLE 1-2: PIC18F2220/2320 PINOUT I/O DESCRIPTIONS (CONTINUED)

Pin Name	Pin Number		Pin Type	Buffer Type	Description
	PDIP	SOIC			
					PORTC is a bidirectional I/O port.
RC0/T1OSO/T1CKI	11	11			
RC0			I/O	ST	Digital I/O.
T1OSO			O	—	Timer1 oscillator output.
T1CKI			I	ST	Timer1/Timer3 external clock input.
RC1/T1OSI/CCP2	12	12			
RC1			I/O	ST	Digital I/O.
T1OSI			I	CMOS	Timer1 oscillator input.
CCP2(2)			I/O	ST	Capture 2 input, Compare 2 output, PWM2 output.
RC2/CCP1/P1A	13	13			
RC2			I/O	ST	Digital I/O.
CCP1			I/O	ST	Capture 1 input/Compare 1 output/PWM1 output.
P1A			O	—	Enhanced CCP1 output.
RC3/SCK/SCL	14	14			
RC3			I/O	ST	Digital I/O.
SCK			I/O	ST	Synchronous serial clock input/output for SPI mode.
SCL			I/O	ST	Synchronous serial clock input/output for I^2C™ mode.
RC4/SDI/SDA	15	15			
RC4			I/O	ST	Digital I/O.
SDI			I	ST	SPI data in.
SDA			I/O	ST	I^2C data I/O.
RC5/SDO	16	16			
RC5			I/O	ST	Digital I/O.
SDO			O	—	SPI data out.
RC6/TX/CK	17	17			
RC6			I/O	ST	Digital I/O.
TX			O	—	USART asynchronous transmit.
CK			I/O	ST	USART synchronous clock (see related RX/DT).
RC7/RX/DT	18	18			
RC7			I/O	ST	Digital I/O.
RX			I	ST	USART asynchronous receive.
DT			I/O	ST	USART synchronous data (see related TX/CK).
VSS	8, 19	8, 19	P	—	Ground reference for logic and I/O pins.
VDD	20	20	P	—	Positive supply for logic and I/O pins.

Legend: TTL = TTL compatible input
CMOS = CMOS compatible input or output
ST = Schmitt Trigger input with CMOS levels
I = Input
O = Output
P = Power
OD = Open-drain (no diode to VDD)

Note 1: Alternate assignment for CCP2 when CCP2MX is cleared.

2: Default assignment for CCP2 when CCP2MX (CONFIG3H<0>) is set.

TABLE 1-3: PIC18F4220/4320 PINOUT I/O DESCRIPTIONS

Pin Name	Pin Number			Pin Type	Buffer Type	Description
	PDIP	TQFP	QFN			
MCLR/VPP/RE3	1	18	18			Master Clear (input) or programming voltage (input).
MCLR				I	ST	Master Clear (Reset) input. This pin is an active-low Reset to the device.
VPP				P		Programming voltage input.
RE3				I	ST	Digital input.
OSC1/CLKI/RA7	13	30	32			Oscillator crystal or external clock input.
OSC1				I	ST	Oscillator crystal input or external clock source input. ST buffer when configured in RC mode, CMOS otherwise.
CLKI				I	CMOS	External clock source input. Always associated with pin function OSC1. (See related OSC1/CLKI, OSC2/CLKO pins.)
RA7				I/O	TTL	General purpose I/O pin.
OSC2/CLKO/RA6	14	31	33			Oscillator crystal or clock output.
OSC2				O	—	Oscillator crystal output. Connects to crystal or resonator in Crystal Oscillator mode.
CLKO				O	—	In RC mode, OSC2 pin outputs CLKO which has 1/4 the frequency of OSC1 and denotes the instruction cycle rate.
RA6				I/O	TTL	General purpose I/O pin.
						PORTA is a bidirectional I/O port.
RA0/AN0	2	19	19			
RA0				I/O	TTL	Digital I/O.
AN0				I	Analog	Analog input 0.
RA1/AN1	3	20	20			
RA1				I/O	TTL	Digital I/O.
AN1				I	Analog	Analog input 1.
RA2/AN2/VREF-/CVREF	4	21	21			
RA2				I/O	TTL	Digital I/O.
AN2				I	Analog	Analog input 2.
VREF-				I	Analog	A/D reference voltage (low) input.
CVREF				O	Analog	Comparator reference voltage output.
RA3/AN3/VREF+	5	22	22			
RA3				I/O	TTL	Digital I/O.
AN3				I	Analog	Analog input 3.
VREF+				I	Analog	A/D reference voltage (high) input.
RA4/T0CKI/C1OUT	6	23	23			
RA4				I/O	ST/OD	Digital I/O. Open drain when configured as output.
T0CKI				I	ST	Timer0 external clock input.
C1OUT				O	—	Comparator 1 output.
RA5/AN4/SS/LVDIN/C2OUT	7	24	24			
RA5				I/O	TTL	Digital I/O.
AN4				I	Analog	Analog input 4.
SS				I	TTL	SPI slave select input.
LVDIN				I	Analog	Low-Voltage Detect input.
C2OUT				O	—	Comparator 2 output.
RA6						See the OSC2/CLKO/RA6 pin.
RA7						See the OSC1/CLKI/RA7 pin.

Legend: TTL = TTL compatible input; CMOS = CMOS compatible input or output; ST = Schmitt Trigger input with CMOS levels; I = Input; O = Output; P = Power; OD = Open-drain (no diode to VDD)

Note 1: Alternate assignment for CCP2 when CCP2MX is cleared.

2: Default assignment for CCP2 when CCP2MX (CONFIG3H<0>) is set.

© 2007 Microchip Technology Inc.

TABLE 1-3: PIC18F4220/4320 PINOUT I/O DESCRIPTIONS (CONTINUED)

Pin Name	Pin Number			Pin Type	Buffer Type	Description
	PDIP	TQFP	QFN			
						PORTB is a bidirectional I/O port. PORTB can be software programmed for internal weak pull-ups on all inputs.
RB0/AN12/INT0	33	8	9			
RB0				I/O	TTL	Digital I/O.
AN12				I	Analog	Analog input 12.
INT0				I	ST	External interrupt 0.
RB1/AN10/INT1	34	9	10			
RB1				I/O	TTL	Digital I/O.
AN10				I	Analog	Analog input 10.
INT1				I	ST	External interrupt 1.
RB2/AN8/INT2	35	10	11			
RB2				I/O	TTL	Digital I/O.
AN8				I	Analog	Analog input 8.
INT2				I	ST	External interrupt 2.
RB3/AN9/CCP2	36	11	12			
RB3				I/O	TTL	Digital I/O.
AN9				I	Analog	Analog input 9.
CCP2(1)				I/O	ST	Capture 2 input, Compare 2 output, PWM2 output.
RB4/AN11/KBI0	37	14	14			
RB4				I/O	TTL	Digital I/O.
AN11				I	Analog	Analog input 11.
KBI0				I	TTL	Interrupt-on-change pin.
RB5/KBI1/PGM	38	15	15			
RB5				I/O	TTL	Digital I/O.
KBI1				I	TTL	Interrupt-on-change pin.
PGM				I/O	ST	Low-voltage ICSP™ programming enable pin.
RB6/KBI2/PGC	39	16	16			
RB6				I/O	TTL	Digital I/O.
KBI2				I	TTL	Interrupt-on-change pin.
PGC				I/O	ST	In-Circuit Debugger and ICSP programming clock pin.
RB7/KBI3/PGD	40	17	17			
RB7				I/O	TTL	Digital I/O.
KBI3				I	TTL	Interrupt-on-change pin.
PGD				I/O	ST	In-Circuit Debugger and ICSP programming data pin.

Legend: TTL = TTL compatible input
CMOS = CMOS compatible input or output
ST = Schmitt Trigger input with CMOS levels
I = Input
O = Output
P = Power
OD = Open-drain (no diode to V_{DD})

Note 1: Alternate assignment for CCP2 when CCP2MX is cleared.
2: Default assignment for CCP2 when CCP2MX (CONFIG3H<0>) is set.

TABLE 1-3: PIC18F4220/4320 PINOUT I/O DESCRIPTIONS (CONTINUED)

Pin Name	Pin Number			Pin Type	Buffer Type	Description
	PDIP	TQFP	QFN			
						PORTC is a bidirectional I/O port.
RC0/T1OSO/T1CKI	15	32	34			
RC0				I/O	ST	Digital I/O.
T1OSO				O	—	Timer1 oscillator output.
T1CKI				I	ST	Timer1/Timer3 external clock input.
RC1/T1OSI/CCP2	16	35	35			
RC1				I/O	ST	Digital I/O.
T1OSI				I	CMOS	Timer1 oscillator input.
CCP2(2)				I/O	ST	Capture 2 input, Compare 2 output, PWM2 output.
RC2/CCP1/P1A	17	36	36			
RC2				I/O	ST	Digital I/O.
CCP1				I/O	ST	Capture 1 input/Compare 1 output/PWM1 output.
P1A				O	—	Enhanced CCP1 output.
RC3/SCK/SCL	18	37	37			
RC3				I/O	ST	Digital I/O.
SCK				I/O	ST	Synchronous serial clock input/output for SPI mode.
SCL				I/O	ST	Synchronous serial clock input/output for I^2C™ mode.
RC4/SDI/SDA	23	42	42			
RC4				I/O	ST	Digital I/O.
SDI				I	ST	SPI data in.
SDA				I/O	ST	I^2C data I/O.
RC5/SDO	24	43	43			
RC5				I/O	ST	Digital I/O.
SDO				O	—	SPI data out.
RC6/TX/CK	25	44	44			
RC6				I/O	ST	Digital I/O.
TX				O	—	USART asynchronous transmit.
CK				I/O	ST	USART synchronous clock (see related RX/DT).
RC7/RX/DT	26	1	1			
RC7				I/O	ST	Digital I/O.
RX				I	ST	USART asynchronous receive.
DT				I/O	ST	USART synchronous data (see related TX/CK).

Legend: TTL = TTL compatible input; CMOS = CMOS compatible input or output; ST = Schmitt Trigger input with CMOS levels; I = Input; O = Output; P = Power; OD = Open-drain (no diode to V_{DD})

Note 1: Alternate assignment for CCP2 when CCP2MX is cleared.
2: Default assignment for CCP2 when CCP2MX (CONFIG3H<0>) is set.

© 2007 Microchip Technology Inc.

TABLE 1-3: PIC18F4220/4320 PINOUT I/O DESCRIPTIONS (CONTINUED)

Pin Name	Pin Number			Pin Type	Buffer Type	Description
	PDIP	TQFP	QFN			
						PORTD is a bidirectional I/O port or a Parallel Slave Port (PSP) for interfacing to a microprocessor port. These pins have TTL input buffers when PSP module is enabled.
RD0/PSP0	19	38	38			
RD0				I/O	ST	Digital I/O.
PSP0				I/O	TTL	Parallel Slave Port data.
RD1/PSP1	20	39	39			
RD1				I/O	ST	Digital I/O.
PSP1				I/O	TTL	Parallel Slave Port data.
RD2/PSP2	21	40	40			
RD2				I/O	ST	Digital I/O.
PSP2				I/O	TTL	Parallel Slave Port data.
RD3/PSP3	22	41	41			
RD3				I/O	ST	Digital I/O.
PSP3				I/O	TTL	Parallel Slave Port data.
RD4/PSP4	27	2	2			
RD4				I/O	ST	Digital I/O.
PSP4				I/O	TTL	Parallel Slave Port data.
RD5/PSP5/P1B	28	3	3			
RD5				I/O	ST	Digital I/O.
PSP5				I/O	TTL	Parallel Slave Port data.
P1B				O	—	Enhanced CCP1 output.
RD6/PSP6/P1C	29	4	4			
RD6				I/O	ST	Digital I/O.
PSP6				I/O	TTL	Parallel Slave Port data.
P1C				O	—	Enhanced CCP1 output.
RD7/PSP7/P1D	30	5	5			
RD7				I/O	ST	Digital I/O.
PSP7				I/O	TTL	Parallel Slave Port data.
P1D				O	—	Enhanced CCP1 output.

Legend: TTL = TTL compatible input
CMOS = CMOS compatible input or output
ST = Schmitt Trigger input with CMOS levels
I = Input
O = Output
P = Power
OD = Open-drain (no diode to V_{DD})

Note 1: Alternate assignment for CCP2 when CCP2MX is cleared.
2: Default assignment for CCP2 when CCP2MX (CONFIG3H<0>) is set.

TABLE 1-3: PIC18F4220/4320 PINOUT I/O DESCRIPTIONS (CONTINUED)

Pin Name	Pin Number			Pin Type	Buffer Type	Description
	PDIP	TQFP	QFN			
						PORTE is a bidirectional I/O port.
RE0/AN5/$\overline{RD}$	8	25	25			
RE0				I/O	ST	Digital I/O.
AN5				I	Analog	Analog input 5.
$\overline{RD}$				I	TTL	Read control for Parallel Slave Port (see also $\overline{WR}$ and $\overline{CS}$ pins).
RE1/AN6/$\overline{WR}$	9	26	26			
RE1				I/O	ST	Digital I/O.
AN6				I	Analog	Analog input 6.
$\overline{WR}$				I	TTL	Write control for Parallel Slave Port (see $\overline{CS}$ and $\overline{RD}$ pins).
RE2/AN7/$\overline{CS}$	10	27	27			
RE2				I/O	ST	Digital I/O.
AN7				I	Analog	Analog input 7.
$\overline{CS}$				I	TTL	Chip select control for Parallel Slave Port (see related $\overline{RD}$ and $\overline{WR}$).
RE3	1	18	18	—	—	See $\overline{MCLR}$/VPP/RE3 pin.
VSS	12, 31	6, 29	6, 30, 31	P	—	Ground reference for logic and I/O pins.
VDD	11, 32	7, 28	7, 8 29	P	—	Positive supply for logic and I/O pins.
NC	—	—	13, 28	NC	NC	No connect.

Legend: TTL = TTL compatible input; CMOS = CMOS compatible input or output; ST = Schmitt Trigger input with CMOS levels; I = Input; O = Output; P = Power; OD = Open-drain (no diode to VDD)

Note 1: Alternate assignment for CCP2 when CCP2MX is cleared.

2: Default assignment for CCP2 when CCP2MX (CONFIG3H<0>) is set.

© 2007 Microchip Technology Inc.

2.0 OSCILLATOR CONFIGURATIONS

2.1 Oscillator Types

The PIC18F2X20 and PIC18F4X20 devices can be operated in ten different oscillator modes. The user can program the Configuration bits, FOSC3:FOSC0, in Configuration Register 1H to select one of these ten modes:

1. LP Low-Power Crystal
2. XT Crystal/Resonator
3. HS High-Speed Crystal/Resonator
4. HSPLL High-Speed Crystal/Resonator with PLL Enabled
5. RC External Resistor/Capacitor with FOSC/4 Output on RA6
6. RCIO External Resistor/Capacitor with I/O on RA6
7. INTIO1 Internal Oscillator with FOSC/4 Output on RA6 and I/O on RA7
8. INTIO2 Internal Oscillator with I/O on RA6 and RA7
9. EC External Clock with FOSC/4 Output
10. ECIO External Clock with I/O on RA6

2.2 Crystal Oscillator/Ceramic Resonators

In XT, LP, HS or HSPLL Oscillator modes, a crystal or ceramic resonator is connected to the OSC1 and OSC2 pins to establish oscillation. Figure 2-1 shows the pin connections.

The oscillator design requires the use of a parallel cut crystal.

Note:	Use of a series cut crystal may give a frequency out of the crystal manufacturers specifications.

FIGURE 2-1: CRYSTAL/CERAMIC RESONATOR OPERATION (XT, LP, HS OR HSPLL CONFIGURATION)

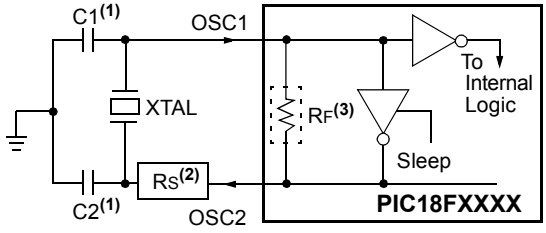

Note 1: See Table 2-1 and Table 2-2 for initial values of C1 and C2.
2: A series resistor (RS) may be required for AT strip cut crystals.
3: RF varies with the oscillator mode chosen.

TABLE 2-1: CAPACITOR SELECTION FOR CERAMIC RESONATORS

Typical Capacitor Values Used:			
Mode	**Freq**	**OSC1**	**OSC2**
XT	455 kHz 2.0 MHz 4.0 MHz	56 pF 47 pF 33 pF	56 pF 47 pF 33 pF
HS	8.0 MHz 16.0 MHz	27 pF 22 pF	27 pF 22 pF

Capacitor values are for design guidance only.

These capacitors were tested with the resonators listed below for basic start-up and operation. **These values are not optimized**.

Different capacitor values may be required to produce acceptable oscillator operation. The user should test the performance of the oscillator over the expected VDD and temperature range for the application.

See the notes on page 20 for additional information.

Resonators Used:	
455 kHz	4.0 MHz
2.0 MHz	8.0 MHz
16.0 MHz	

TABLE 2-2: CAPACITOR SELECTION FOR CRYSTAL OSCILLATOR

Osc Type	Crystal Freq	Typical Capacitor Values Tested:	
		C1	C2
LP	32 kHz	33 pF	33 pF
	200 kHz	15 pF	15 pF
XT	1 MHz	33 pF	33 pF
	4 MHz	27 pF	27 pF
HS	4 MHz	27 pF	27 pF
	8 MHz	22 pF	22 pF
	20 MHz	15 pF	15 pF

Capacitor values are for design guidance only.

These capacitors were tested with the crystals listed below for basic start-up and operation. **These values are not optimized.**

Different capacitor values may be required to produce acceptable oscillator operation. The user should test the performance of the oscillator over the expected VDD and temperature range for the application.

See the notes following this table for additional information.

Crystals Used:	
32 kHz	4 MHz
200 kHz	8 MHz
1 MHz	20 MHz

Note 1: Higher capacitance increases the stability of the oscillator, but also increases the start-up time.

2: When operating below 3V VDD, or when using certain ceramic resonators at any voltage, it may be necessary to use the HS mode or switch to a crystal oscillator.

3: Since each resonator/crystal has its own characteristics, the user should consult the resonator/crystal manufacturer for appropriate values of external components.

4: RS may be required to avoid overdriving crystals with low drive level specification.

5: Always verify oscillator performance over the VDD and temperature range that is expected for the application.

An external clock source may also be connected to the OSC1 pin in the HS mode, as shown in Figure 2-2.

FIGURE 2-2: EXTERNAL CLOCK INPUT OPERATION (HS OSC CONFIGURATION)

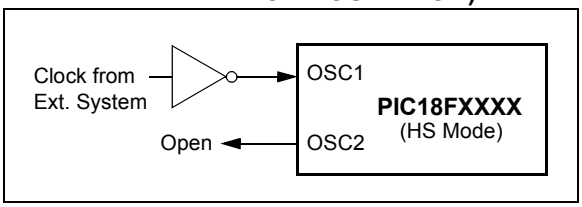

2.3 HSPLL

A Phase Locked Loop (PLL) circuit is provided as an option for users who wish to use a lower frequency crystal oscillator circuit, or to clock the device up to its highest rated frequency from a crystal oscillator. This may be useful for customers who are concerned with EMI due to high-frequency crystals.

The HSPLL mode makes use of the HS mode oscillator for frequencies up to 10 MHz. A PLL then multiplies the oscillator output frequency by 4 to produce an internal clock frequency up to 40 MHz.

The PLL is enabled only when the oscillator Configuration bits are programmed for HSPLL mode. If programmed for any other mode, the PLL is not enabled.

FIGURE 2-3: PLL BLOCK DIAGRAM

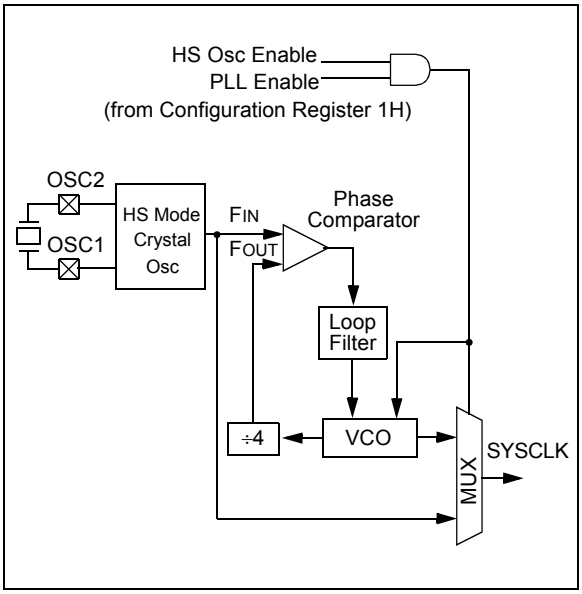

© 2007 Microchip Technology Inc.

2.4 External Clock Input

The EC and ECIO Oscillator modes require an external clock source to be connected to the OSC1 pin. There is no oscillator start-up time required after a Power-on Reset or after an exit from Sleep mode.

In the EC Oscillator mode, the oscillator frequency divided by 4 is available on the OSC2 pin. This signal may be used for test purposes or to synchronize other logic. Figure 2-4 shows the pin connections for the EC Oscillator mode.

FIGURE 2-4: EXTERNAL CLOCK INPUT OPERATION (EC CONFIGURATION)

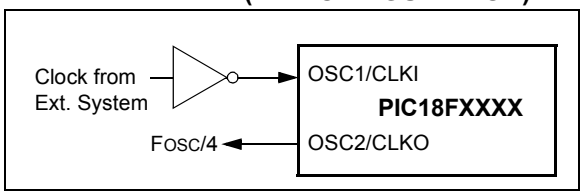

The ECIO Oscillator mode functions like the EC mode, except that the OSC2 pin becomes an additional general purpose I/O pin. The I/O pin becomes bit 6 of PORTA (RA6). Figure 2-5 shows the pin connections for the ECIO Oscillator mode.

FIGURE 2-5: EXTERNAL CLOCK INPUT OPERATION (ECIO CONFIGURATION)

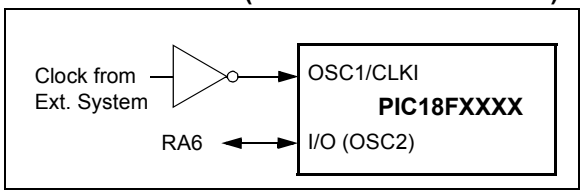

2.5 RC Oscillator

For timing insensitive applications, the "RC" and "RCIO" device options offer additional cost savings. The RC oscillator frequency is a function of the supply voltage, the resistor (REXT) and capacitor (CEXT) values and the operating temperature. In addition to this, the oscillator frequency will vary from unit to unit due to normal manufacturing variation. Furthermore, the difference in lead frame capacitance between package types will also affect the oscillation frequency, especially for low CEXT values. The user also needs to take into account variation due to tolerance of external R and C components used. Figure 2-6 shows how the R/C combination is connected.

In the RC Oscillator mode, the oscillator frequency divided by 4 is available on the OSC2 pin. This signal may be used for test purposes or to synchronize other logic.

FIGURE 2-6: RC OSCILLATOR MODE

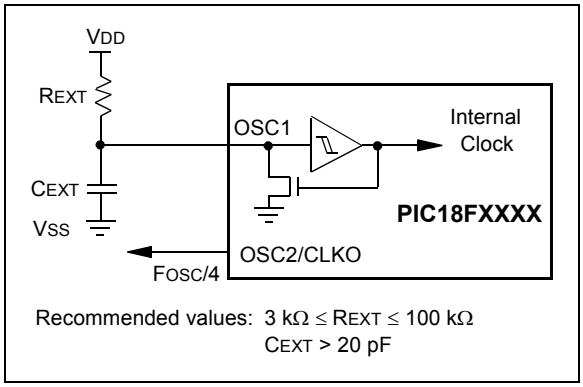

The RCIO Oscillator mode (Figure 2-7) functions like the RC mode, except that the OSC2 pin becomes an additional general purpose I/O pin. The I/O pin becomes bit 6 of PORTA (RA6).

FIGURE 2-7: RCIO OSCILLATOR MODE

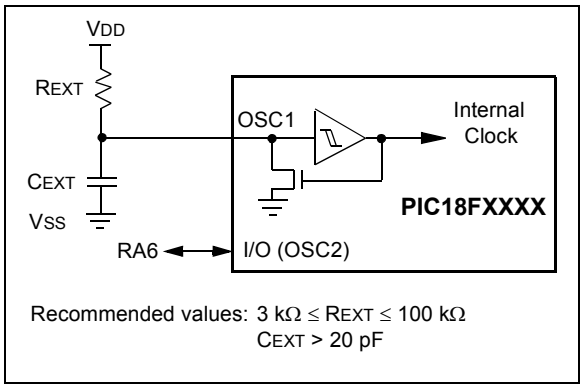

2.6 Internal Oscillator Block

The PIC18F2X20/4X20 devices include an internal oscillator block that generates two independent clock signals. Either can be used as the system's clock source. This can eliminate the need for external oscillator circuits on the OSC1 or OSC2 pins.

The main output (INTOSC) is an 8-MHz clock source that can be used to directly drive the system clock. It also drives a post-scaler that can provide a range of clock frequencies from 125 kHz to 4 MHz. The INTOSC output is enabled when the system clock frequency is set from 125 kHz to 8 MHz.

The other clock source is the internal RC oscillator (INTRC) that provides a 31-kHz output. The INTRC oscillator is enabled by selecting the internal oscillator block as the system clock source or by enabling any of the following:

- Power-up Timer
- Fail-Safe Clock Monitor
- Watchdog Timer
- Two-Speed Start-up

These features are discussed in greater detail in **Section 23.0 "Special Features of the CPU"**.

The clock source frequency (INTOSC direct, INTRC direct or INTOSC post-scaler) is selected by configuring the IRCF bits of the OSCCON register (Register 2-2).

2.6.1 INTIO MODES

Using the internal oscillator as the clock source can eliminate the need for up to two external oscillator pins. This frees the pins to be used for digital I/O.

Two configurations are available:

- INTIO1 mode – The OSC2 pin outputs FOSC/4 while OSC1 functions as RA7 for digital input and output.
- INTIO2 mode – OSC1 functions as RA7 and OSC2 functions as RA6, both for digital input and output.

© 2007 Microchip Technology Inc.

2.6.2 OSCTUNE REGISTER

The internal oscillator block is calibrated at the factory to produce an INTOSC output frequency of approximately 8 MHz. (See parameters F14–F19 in Table 26-8.)

The INTOSC frequency can be adjusted using the TUN5:TUN1 bits in the OSCTUNE register OSCTUNE<5:1>. OSCTUNE<0> has no effect, but is readable and writable, enabling changes of the INTOSC frequency using two increment or decrement instructions.

The internal oscillator's output can be adjusted in the user's application. This is done by writing to the OSCTUNE register (Register 2-1). The tuning sensitivity is constant throughout the tuning range.

When the OSCTUNE register is modified, the INTOSC and INTRC frequencies begin shifting to the new frequency. The INTOSC and INTRC clocks will stabilize at the new frequency within 100 μs. Code execution continues during this shift.

There is no indication when the shift occurs. Operation of features that depend on the INTRC clock source frequency also will be affected by the change in frequency. This includes the WDT, Fail-Safe Clock Monitor and peripherals.

REGISTER 2-1: OSCTUNE: OSCILLATOR TUNING REGISTER

U-0	U-0	R/W-0	R/W-0	R/W-0	R/W-0	R/W-0	R/W-0
—	—	TUN5	TUN4	TUN3	TUN2	TUN1	TUN0
bit 7							bit 0

Legend:			
R = Readable bit	W = Writable bit	U = Unimplemented bit, read as '0'	
-n = Value at POR	'1' = Bit is set	'0' = Bit is cleared	x = Bit is unknown

bit 7-6 **Unimplemented:** Read as '0'

bit 5-1 **TUN<5:1>:** Frequency Tuning bits – Adjusts the frequency of INTOSC. Can adjust INTRC, depending on TUNSEL (OSCTUN2<7>)

011111 = Maximum frequency
•
•
000001
000000 = Center frequency. Oscillator module is running at the calibrated frequency.
111111
•
•
100000 = Minimum frequency

bit 0 **TUN<0>:** A placeholder with no effect on the INTRC frequency. Provided to facilitate incrementation and decrementation of the OSCTUN2 register and adjustment of the INTRC frequency.

2.6.3 OSCTUN2 REGISTER

The internal oscillator block is calibrated at the factory to produce an INTRC output frequency of approximately 31 kHz. (See parameters F20 and F21 in Table 26-8.)

The INTRC frequency can be adjusted two ways:

- If TUNSEL (OSCTUN2<7>) is clear – TUN5:TUN1 in OSCTUNE<5:1> adjusts the INTRC clock frequency and also can adjust the INTOSC clock frequency. (See Register 2-1, OSCTUNE.)
- If TUNSEL (OSCTUN2<7>) is set – TUN5:TUN1 in OSCTUN2<5:1> adjusts the INTRC clock frequency *without* affecting the INTOSC frequency. (See Register 2-2, OSCTUN2.)

In OSCTUN2, the OSCTUN2<0> bit has no effect, but is readable and writable, enabling changes of the INTRC frequency using two increment or decrement instructions.

When the OSCTUN2 register is modified, the INTRC frequency will begin shifting to the new frequency, and will stabilize at the new frequency within 100 μs. Code execution continues during this shift.

There is no indication when the shift occurs. Operation of features that depend on the INTRC clock source frequency also will be affected by the change in frequency. This includes the WDT, Fail-Safe Clock Monitor and peripherals.

REGISTER 2-2: OSCTUN2: INTRC OSCILLATOR TUNING REGISTER

R/W-0	U-0	R/W-0	R/W-0	R/W-0	R/W-0	R/W-0	R/W-0
TUNSEL	—	TUN5	TUN4	TUN3	TUN2	TUN1	TUN0
bit 7							bit 0

Legend:			
R = Readable bit	W = Writable bit	U = Unimplemented bit, read as ‘0’	
-n = Value at POR	‘1’ = Bit is set	‘0’ = Bit is cleared	x = Bit is unknown

bit 7 **TUNSEL:** Enables tuning of INTRC using OCSTUN2<5:1>
1 = INTRC adjusted by OSCTUN2<5:1>
0 = INTRC adjusted by OSCTUNE<5:1>

bit 6 **Unimplemented:** Read as ‘0’

bit 5-1 **TUN<5:1>:** Frequency Tuning bits – Adjusts the frequency of INTRC when TUNSEL is set
011111 = Maximum frequency
• •
• •
000001
000000 = Center frequency. Oscillator module is running at the calibrated frequency.
111111
• •
• •
100000 = Minimum frequency

bit 0 **TUN<0>:** A placeholder with no effect on the INTRC frequency. Provided to facilitate incrementation and decrementation of the OSCTUN2 register and adjustment of the INTRC frequency.

© 2007 Microchip Technology Inc.

2.7 Clock Sources and Oscillator Switching

Like previous PIC18 devices, the PIC18F2X20 and PIC18F4X20 devices include a feature that allows the system clock source to be switched from the main oscillator to an alternate, low-frequency clock source. PIC18F2X20/4X20 devices offer two alternate clock sources. When enabled, these give additional options for switching to the various power-managed operating modes.

Essentially, there are three clock sources for these devices:

- Primary oscillators
- Secondary oscillators
- Internal oscillator block

The **primary oscillators** include the External Crystal and Resonator modes, the External RC modes, the External Clock modes and the internal oscillator block. The particular mode is defined on POR by the contents of Configuration Register 1H. The details of these modes are covered earlier in this chapter.

The **secondary oscillators** are those external sources not connected to the OSC1 or OSC2 pins. These sources may continue to operate even after the controller is placed in a power-managed mode.

PIC18F2X20/4X20 devices offer only the Timer1 oscillator as a secondary oscillator. This oscillator, in all power-managed modes, is often the time base for functions such as a Real-Time Clock (RTC).

Most often, a 32.768 kHz watch crystal is connected between the RC0/T1OSO/T1CKI and RC1/T1OSI pins. Like the LP Oscillator mode circuit, loading capacitors are also connected from each pin to ground.

The Timer1 oscillator is discussed in greater detail in **Section 12.2 "Timer1 Oscillator"**.

In addition to being a primary clock source, the **internal oscillator block** is available as a power-managed mode clock source. The INTRC source is also used as the clock source for several special features, such as the WDT and Fail-Safe Clock Monitor.

The clock sources for the PIC18F2X20/4X20 devices are shown in Figure 2-8. See **Section 12.0 "Timer1 Module"** for further details of the Timer1 oscillator. See **Section 23.1 "Configuration Bits"** for Configuration register details.

2.7.1 OSCILLATOR CONTROL REGISTER

The OSCCON register (Register 2-3) controls several aspects of the system clock's operation, both in full-power operation and in power-managed modes.

The System Clock Select bits, SCS1:SCS0, select the clock source that is used when the device is operating in power-managed modes. The available clock sources are the primary clock (defined in Configuration Register 1H), the secondary clock (Timer1 oscillator) and the internal oscillator block. The clock selection has no effect until a `SLEEP` instruction is executed and the device enters a power-managed mode of operation. The SCS bits are cleared on all forms of Reset.

The Internal Oscillator Select bits, IRCF2:IRCF0, select the frequency output of the internal oscillator block that is used to drive the system clock. The choices are the INTRC source, the INTOSC source (8 MHz) or one of the six frequencies derived from the INTOSC postscaler (125 kHz to 4 MHz). If the internal oscillator block is supplying the system clock, changing the states of these bits will have an immediate change on the internal oscillator's output.

The OSTS, IOFS and T1RUN bits indicate which clock source is currently providing the system clock. The OSTS indicates that the Oscillator Start-up Timer (OST) has timed out and the primary clock is providing the system clock in primary clock modes. The IOFS bit indicates when the internal oscillator block has stabilized and is providing the system clock in RC Clock modes. The T1RUN bit (T1CON<6>) indicates when the Timer1 oscillator is providing the system clock in secondary clock modes. If none of these bits are set, the INTRC is providing the system clock, or the internal oscillator block has just started and is not yet stable.

The IDLEN bit controls the selective shutdown of the controller's CPU in power-managed modes. The use of these bits is discussed in more detail in **Section 3.0 "Power-Managed Modes"**.

Note 1:	The Timer1 oscillator must be enabled to select the secondary clock source. The Timer1 oscillator is enabled by setting the T1OSCEN bit in the Timer1 Control register (T1CON<3>). If the Timer1 oscillator is not enabled, then any attempt to set the SCS0 bit will be ignored.
2:	It is recommended that the Timer1 oscillator be operating and stable before executing the `SLEEP` instruction or a very long delay may occur while the Timer1 oscillator starts.

FIGURE 2-8: PIC18F2X20/4X20 CLOCK DIAGRAM

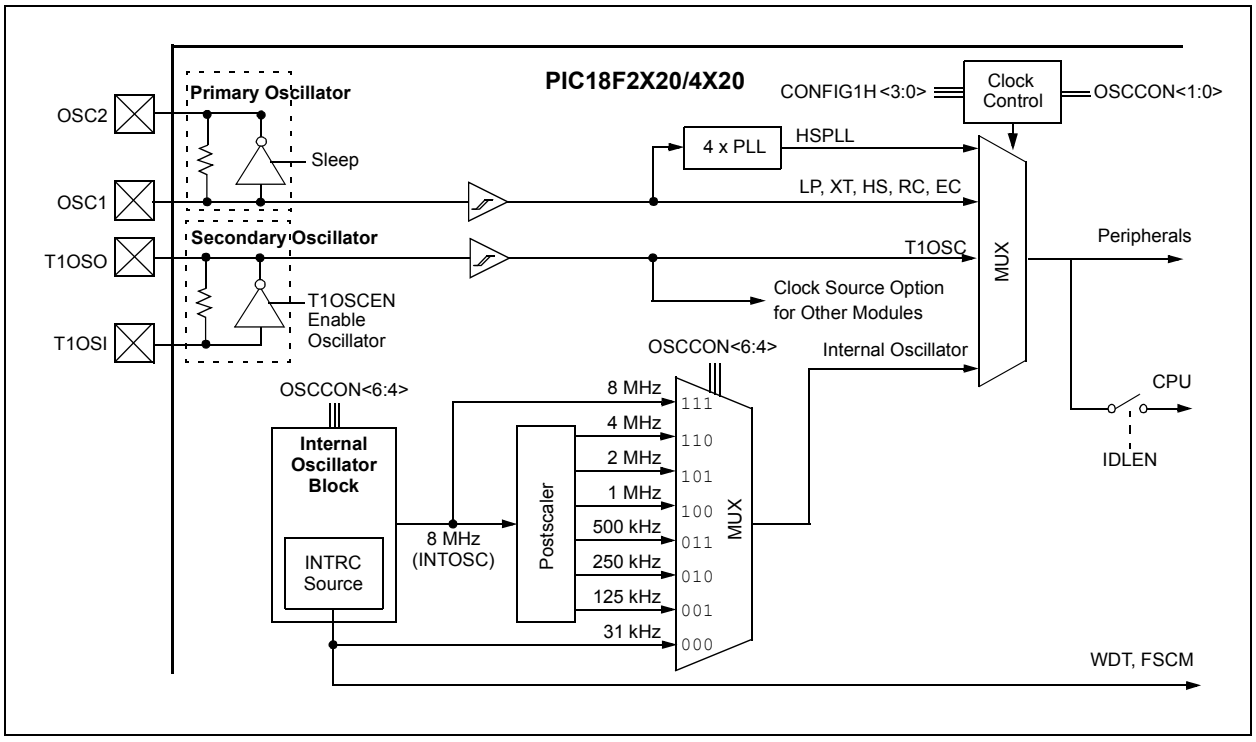

© 2007 Microchip Technology Inc.

REGISTER 2-3: OSCCON: OSCILLATOR CONTROL REGISTER

R/W-0	R/W-0	R/W-0	R/W-0	R[(1)]	R-0	R/W-0	R/W-0
IDLEN	IRCF2	IRCF1	IRCF0	OSTS	IOFS	SCS1	SCS0
bit 7							bit 0

Legend:			
R = Readable bit	W = Writable bit	U = Unimplemented bit, read as '0'	
-n = Value at POR	'1' = Bit is set	'0' = Bit is cleared	x = Bit is unknown

bit 7 **IDLEN:** Idle Enable bit
- 1 = Idle mode enabled; CPU core is not clocked in power-managed modes
- 0 = Run mode enabled; CPU core is clocked in power-managed modes

bit 6-4 **IRCF2:IRCF0:** Internal Oscillator Frequency Select bits
- 111 = 8 MHz (8 MHz source drives clock directly)
- 110 = 4 MHz
- 101 = 2 MHz
- 100 = 1 MHz
- 011 = 500 kHz
- 010 = 250 kHz
- 001 = 125 kHz
- 000 = 31 kHz (INTRC source drives clock directly)

bit 3 **OSTS:** Oscillator Start-up Time-out Status bit[(1)]
- 1 = Oscillator Start-up Timer time-out has expired; primary oscillator is running
- 0 = Oscillator Start-up Timer time-out is running; primary oscillator is not ready

bit 2 **IOFS:** INTOSC Frequency Stable bit
- 1 = INTOSC frequency is stable
- 0 = INTOSC frequency is not stable

bit 1-0 **SCS1:SCS0:** System Clock Select bits
- 1x = Internal oscillator block (RC modes)
- 01 = Timer1 oscillator (Secondary modes)[(2)]
- 00 = Primary oscillator (Sleep and PRI_IDLE modes)

Note 1: Depends on state of IESO bit in Configuration Register 1H.

2: SCS0 may not be set while T1OSCEN (T1CON<3>) is clear.

2.7.2 OSCILLATOR TRANSITIONS

The PIC18F2X20/4X20 devices contain circuitry to prevent clocking “glitches” when switching between clock sources. A short pause in the system clock occurs during the clock switch. The length of this pause is between 8 and 9 clock periods of the new clock source. This ensures that the new clock source is stable and that its pulse width will not be less than the shortest pulse width of the two clock sources.

Clock transitions are discussed in greater detail in **Section 3.1.2 “Entering Power-Managed Modes”**.

2.8 Effects of Power-Managed Modes on the Various Clock Sources

When the device executes a SLEEP instruction, the system is switched to one of the power-managed modes, depending on the state of the IDLEN and SCS1:SCS0 bits of the OSCCON register. See **Section 3.0 “Power-Managed Modes”** for details.

When PRI_IDLE mode is selected, the designated primary oscillator continues to run without interruption. For all other power-managed modes, the oscillator using the OSC1 pin is disabled. The OSC1 pin (and OSC2 pin, if used by the oscillator) will stop oscillating.

In secondary clock modes (SEC_RUN and SEC_IDLE), the Timer1 oscillator is operating and providing the system clock. The Timer1 oscillator may also run in all power-managed modes if required to clock Timer1 or Timer3.

In internal oscillator modes (RC_RUN and RC_IDLE), the internal oscillator block provides the system clock source. The INTRC output can be used directly to provide the system clock and may be enabled to support various special features, regardless of the power-managed mode (see **Section 23.2 “Watchdog Timer (WDT)”** through **Section 23.4 “Fail-Safe Clock Monitor”**). The INTOSC output at 8 MHz may be used directly to clock the system or may be divided down first. The INTOSC output is disabled if the system clock is provided directly from the INTRC output.

If the Sleep mode is selected, all clock sources are stopped. Since all the transistor switching currents have been stopped, Sleep mode achieves the lowest current consumption of the device (only leakage currents).

Enabling any on-chip feature that will operate during Sleep will increase the current consumed during Sleep. The INTRC is required to support WDT operation. The Timer1 oscillator may be operating to support a Real-Time Clock. Other features may be operating that do not require a system clock source (i.e., MSSP slave, PSP, INTx pins, A/D conversions and others).

2.9 Power-up Delays

Power-up delays are controlled by two timers so that no external Reset circuitry is required for most applications. The delays ensure that the device is kept in Reset until the device power supply is stable under normal circumstances and the primary clock is operating and stable. For additional information on power-up delays, see **Section 4.1 “Power-on Reset (POR)”** through **Section 4.5 “Brown-out Reset (BOR)”**.

The first timer is the Power-up Timer (PWRT) which provides a fixed delay on power-up (parameter 33, Table 26-10), if enabled, in Configuration Register 2L. The second timer is the Oscillator Start-up Timer (OST), intended to keep the chip in Reset until the crystal oscillator is stable (LP, XT and HS modes). The OST does this by counting 1024 oscillator cycles before allowing the oscillator to clock the device.

When the HSPLL Oscillator mode is selected, the device is kept in Reset for an additional 2 ms, following the HS mode OST delay, so the PLL can lock to the incoming clock frequency.

There is a delay of 5 to 10 μs, following POR, while the controller becomes ready to execute instructions. This delay runs concurrently with any other delays. This may be the only delay that occurs when any of the EC, RC or INTIO modes are used as the primary clock source.

TABLE 2-3: OSC1 AND OSC2 PIN STATES IN SLEEP MODE

OSC Mode	OSC1 Pin	OSC2 Pin
RC, INTIO1	Floating, external resistor should pull high	At logic low (clock/4 output)
RCIO, INTIO2	Floating, external resistor should pull high	Configured as PORTA, bit 6
ECIO	Floating, pulled by external clock	Configured as PORTA, bit 6
EC	Floating, pulled by external clock	At logic low (clock/4 output)
LP, XT, and HS	Feedback inverter disabled at quiescent voltage level	Feedback inverter disabled at quiescent voltage level

Note: See Table 4-1 in **Section 4.0 “Reset”** for time-outs due to Sleep and $\overline{\text{MCLR}}$ Reset.

© 2007 Microchip Technology Inc.

3.0 POWER-MANAGED MODES

The PIC18F2X20 and PIC18F4X20 devices offer a total of six operating modes for more efficient power management (see Table 3-1). These operating modes provide a variety of options for selective power conservation in applications where resources may be limited (i.e., battery-powered devices).

There are three categories of power-managed modes:

- Sleep mode
- Idle modes
- Run modes

These categories define which portions of the device are clocked and sometimes, what speed. The Run and Idle modes may use any of the three available clock sources (primary, secondary or INTOSC multiplexer); the Sleep mode does not use a clock source.

The clock switching feature offered in other PIC18 devices (i.e., using the Timer1 oscillator in place of the primary oscillator) and the Sleep mode offered by all PIC® devices (where all system clocks are stopped) are both offered in the PIC18F2X20/4X20 devices (SEC_RUN and Sleep modes, respectively). However, additional power-managed modes are available that allow the user greater flexibility in determining what portions of the device are operating. The power-managed modes are event driven; that is, some specific event must occur for the device to enter or (more particularly) exit these operating modes.

For PIC18F2X20/4X20 devices, the power-managed modes are invoked by using the existing `SLEEP` instruction. All modes exit to PRI_RUN mode when triggered by an interrupt, a Reset, or a WDT time-out (PRI_RUN mode is the normal full-power execution mode; the CPU and peripherals are clocked by the primary oscillator source). In addition, power-managed Run modes may also exit to Sleep mode or their corresponding Idle mode.

3.1 Selecting Power-Managed Modes

Selecting a power-managed mode requires deciding if the CPU is to be clocked or not and selecting a clock source. The IDLEN bit controls CPU clocking while the SC1:SCS0 bits select a clock source. The individual modes, bit settings, clock sources and affected modules are summarized in Table 3-1.

3.1.1 CLOCK SOURCES

The clock source is selected by setting the SCS bits of the OSCCON register. Three clock sources are available for use in power-managed Idle modes: the primary clock (as configured in Configuration Register 1H), the secondary clock (Timer1 oscillator) and the internal oscillator block. The secondary and internal oscillator block sources are available for the power-managed modes (PRI_RUN mode is the normal full-power execution mode; the CPU and peripherals are clocked by the primary oscillator source).

TABLE 3-1: POWER-MANAGED MODES

Mode	OSCCON<7,1:0>		Module Clocking		Available Clock and Oscillator Source
	IDLEN	SCS1:SCS0	CPU	Peripherals	
Sleep	0	00	Off	Off	None – All clocks are disabled
PRI_RUN	0	00	Clocked	Clocked	Primary – LP, XT, HS, HSPLL, RC, EC, INTRC(1). This is the normal full-power execution mode.
SEC_RUN	0	01	Clocked	Clocked	Secondary – Timer1 Oscillator
RC_RUN	0	1x	Clocked	Clocked	Internal Oscillator Block(1)
PRI_IDLE	1	00	Off	Clocked	Primary – LP, XT, HS, HSPLL, RC, EC
SEC_IDLE	1	01	Off	Clocked	Secondary – Timer1 Oscillator
RC_IDLE	1	1x	Off	Clocked	Internal Oscillator Block(1)

Note 1: Includes INTOSC and INTOSC postscaler, as well as the INTRC source.

3.1.2 ENTERING POWER-MANAGED MODES

In general, entry, exit and switching between power-managed clock sources requires clock source switching. In each case, the sequence of events is the same.

Any change in the power-managed mode begins with loading the OSCCON register and executing a SLEEP instruction. The SCS1:SCS0 bits select one of three power-managed clock sources; the primary clock (as defined in Configuration Register 1H), the secondary clock (the Timer1 oscillator) and the internal oscillator block (used in RC modes). Modifying the SCS bits will have no effect until a SLEEP instruction is executed. Entry to the power-managed mode is triggered by the execution of a SLEEP instruction.

Figure 3-5 shows how the system is clocked while switching from the primary clock to the Timer1 oscillator. When the SLEEP instruction is executed, clocks to the device are stopped at the beginning of the next instruction cycle. Eight clock cycles from the new clock source are counted to synchronize with the new clock source. After eight clock pulses from the new clock source are counted, clocks from the new clock source resume clocking the system. The actual length of the pause is between eight and nine clock periods from the new clock source. This ensures that the new clock source is stable and that its pulse width will not be less than the shortest pulse width of the two clock sources.

Three bits indicate the current clock source: OSTS and IOFS in the OSCCON register and T1RUN in the T1CON register. Only one of these bits will be set while in a power-managed mode other than PRI_RUN. When the OSTS bit is set, the primary clock is providing the system clock. When the IOFS bit is set, the INTOSC output is providing a stable 8 MHz clock source and is providing the system clock. When the T1RUN bit is set, the Timer1 oscillator is providing the system clock. If none of these bits are set, then either the INTRC clock source is clocking the system or the INTOSC source is not yet stable.

If the internal oscillator block is configured as the primary clock source in Configuration Register 1H, then both the OSTS and IOFS bits may be set when in PRI_RUN or PRI_IDLE modes. This indicates that the primary clock (INTOSC output) is generating a stable 8 MHz output. Entering a power-managed RC mode (same frequency) would clear the OSTS bit.

Note 1: Caution should be used when modifying a single IRCF bit. If V_{DD} is less than 3V, it is possible to select a higher clock speed than is supported by the low V_{DD}. Improper device operation may result if the V_{DD}/F_{OSC} specifications are violated.

2: Executing a SLEEP instruction does not necessarily place the device into Sleep mode; executing a SLEEP instruction is simply a trigger to place the controller into a power-managed mode selected by the OSCCON register, one of which is Sleep mode.

3.1.3 MULTIPLE SLEEP COMMANDS

The power-managed mode that is invoked with the SLEEP instruction is determined by the settings of the IDLEN and SCS bits at the time the instruction is executed. If another SLEEP instruction is executed, the device will enter the power-managed mode specified by these same bits at that time. If the bits have changed, the device will enter the new power-managed mode specified by the new bit settings.

3.1.4 COMPARISONS BETWEEN RUN AND IDLE MODES

Clock source selection for the Run modes is identical to the corresponding Idle modes. When a SLEEP instruction is executed, the SCS bits in the OSCCON register are used to switch to a different clock source. As a result, if there is a change of clock source at the time a SLEEP instruction is executed, a clock switch will occur.

In Idle modes, the CPU is not clocked and is not running. In Run modes, the CPU is clocked and executing code. This difference modifies the operation of the WDT when it times out. In Idle modes, a WDT time-out results in a wake from power-managed modes. In Run modes, a WDT time-out results in a WDT Reset (see Table 3-2).

During a wake-up from an Idle mode, the CPU starts executing code by entering the corresponding Run mode until the primary clock becomes ready. When the primary clock becomes ready, the clock source is automatically switched to the primary clock. The IDLEN and SCS bits are unchanged during and after the wake-up.

Figure 3-2 shows how the system is clocked during the clock source switch. The example assumes the device was in SEC_IDLE or SEC_RUN mode when a wake is triggered (the primary clock was configured in HSPLL mode).

© 2007 Microchip Technology Inc.

TABLE 3-2: COMPARISON BETWEEN POWER-MANAGED MODES

Power-Managed Mode	CPU is Clocked by ...	WDT Time-out Causes a ...	Peripherals are Clocked by ...	Clock During Wake-up (while primary becomes ready)
Sleep	Not clocked (not running)	Wake-up	Not clocked	None or INTOSC multiplexer if Two-Speed Start-up or Fail-Safe Clock Monitor is enabled.
Any Idle mode	Not clocked (not running)	Wake-up	Primary, Secondary or INTOSC multiplexer	Unchanged from Idle mode (CPU operates as in corresponding Run mode).
Any Run mode	Secondary or INTOSC multiplexer	Reset	Secondary or INTOSC multiplexer	Unchanged from Run mode.

3.2 Sleep Mode

The power-managed Sleep mode in the PIC18F2X20/4X20 devices is identical to that offered in all other PIC microcontrollers. It is entered by clearing the IDLEN and SCS1:SCS0 bits (this is the Reset state) and executing the `SLEEP` instruction. This shuts down the primary oscillator and the OSTS bit is cleared (see Figure 3-1).

When a wake event occurs in Sleep mode (by interrupt, Reset or WDT time-out), the system will not be clocked until the primary clock source becomes ready (see Figure 3-2), or it will be clocked from the internal oscillator block if either the Two-Speed Start-up or the Fail-Safe Clock Monitor are enabled (see **Section 23.0 "Special Features of the CPU"**). In either case, the OSTS bit is set when the primary clock is providing the system clocks. The IDLEN and SCS bits are not affected by the wake-up.

3.3 Idle Modes

The IDLEN bit allows the controller's CPU to be selectively shut down while the peripherals continue to operate. Clearing IDLEN allows the CPU to be clocked. Setting IDLEN disables clocks to the CPU, effectively stopping program execution (see Register 2-3). The peripherals continue to be clocked regardless of the setting of the IDLEN bit.

There is one exception to how the IDLEN bit functions. When all the low-power OSCCON bits are cleared (IDLEN:SCS1:SCS0 = `000`), the device enters Sleep mode upon the execution of the `SLEEP` instruction. This is both the Reset state of the OSCCON register and the setting that selects Sleep mode. This maintains compatibility with other PIC devices that do not offer power-managed modes.

If the Idle Enable bit, IDLEN (OSCCON<7>), is set to a '`1`' when a `SLEEP` instruction is executed, the peripherals will be clocked from the clock source selected using the SCS1:SCS0 bits; however, the CPU will not be clocked. Since the CPU is not executing instructions, the only exits from any of the Idle modes are by interrupt, WDT time-out or a Reset.

When a wake-up event occurs, CPU execution is delayed approximately 10 μs while it becomes ready to execute code. When the CPU begins executing code, it is clocked by the same clock source as was selected in the power-managed mode (i.e., when waking from RC_IDLE mode, the internal oscillator block will clock the CPU and peripherals until the primary clock source becomes ready – this is essentially RC_RUN mode). This continues until the primary clock source becomes ready. When the primary clock becomes ready, the OSTS bit is set and the system clock source is switched to the primary clock (see Figure 3-4). The IDLEN and SCS bits are not affected by the wake-up.

While in any Idle mode or Sleep mode, a WDT time-out will result in a WDT wake-up to full-power operation.

FIGURE 3-1: TIMING TRANSITION FOR ENTRY TO SLEEP MODE

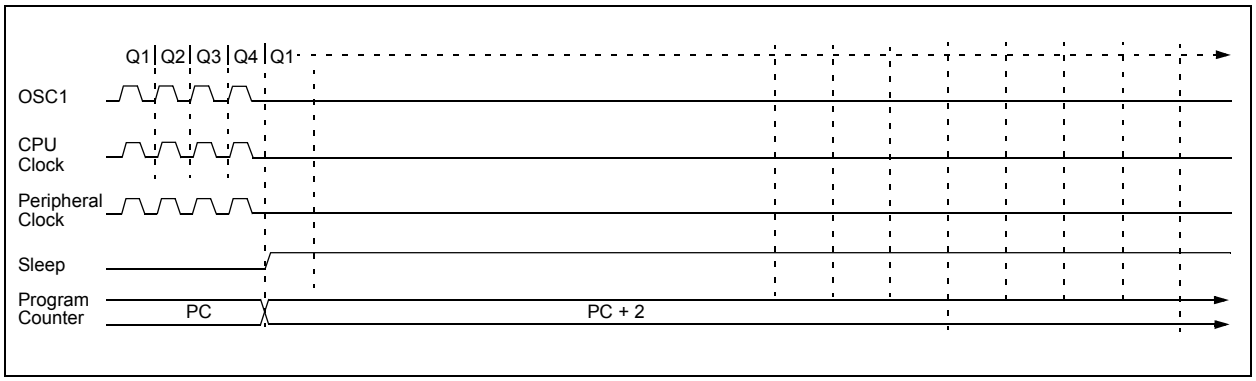

FIGURE 3-2: TRANSITION TIMING FOR WAKE FROM SLEEP (HSPLL)

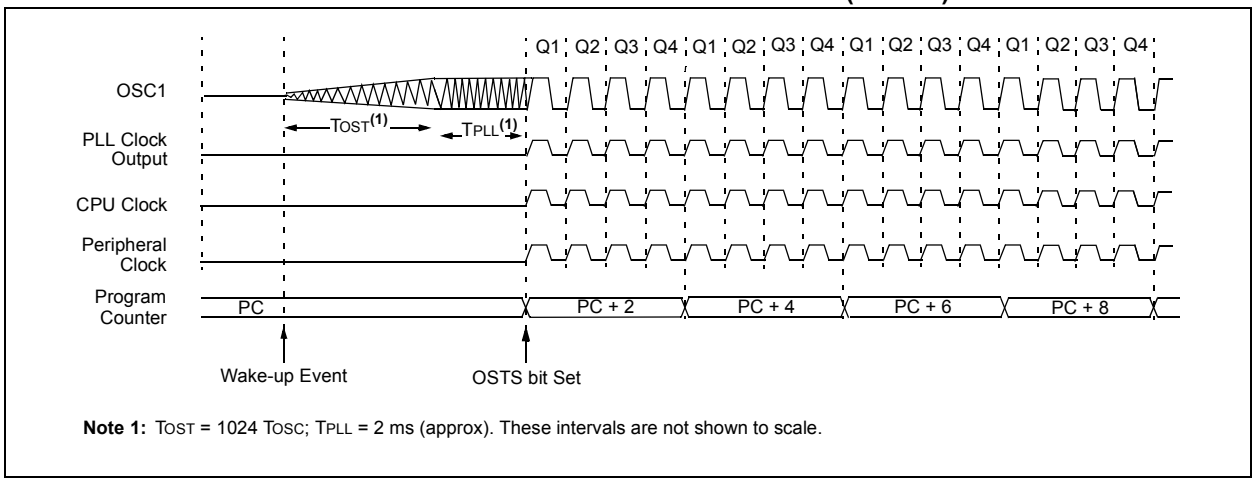

Note 1: TOST = 1024 TOSC; TPLL = 2 ms (approx). These intervals are not shown to scale.

© 2007 Microchip Technology Inc.

3.3.1 PRI_IDLE MODE

This mode is unique among the three low-power Idle modes in that it does not disable the primary system clock. For timing sensitive applications, this allows for the fastest resumption of device operation, with its more accurate primary clock source, since the clock source does not have to “warm up” or transition from another oscillator.

PRI_IDLE mode is entered by setting the IDLEN bit, clearing the SCS bits and executing a `SLEEP` instruction. Although the CPU is disabled, the peripherals continue to be clocked from the primary clock source specified in Configuration Register 1H. The OSTS bit remains set in PRI_IDLE mode (see Figure 3-3).

When a wake-up event occurs, the CPU is clocked from the primary clock source. A delay of approximately 10 μs is required between the wake-up event and when code execution starts. This is required to allow the CPU to become ready to execute instructions. After the wake-up, the OSTS bit remains set. The IDLEN and SCS bits are not affected by the wake-up (see Figure 3-4).

FIGURE 3-3: TRANSITION TIMING TO PRI_IDLE MODE

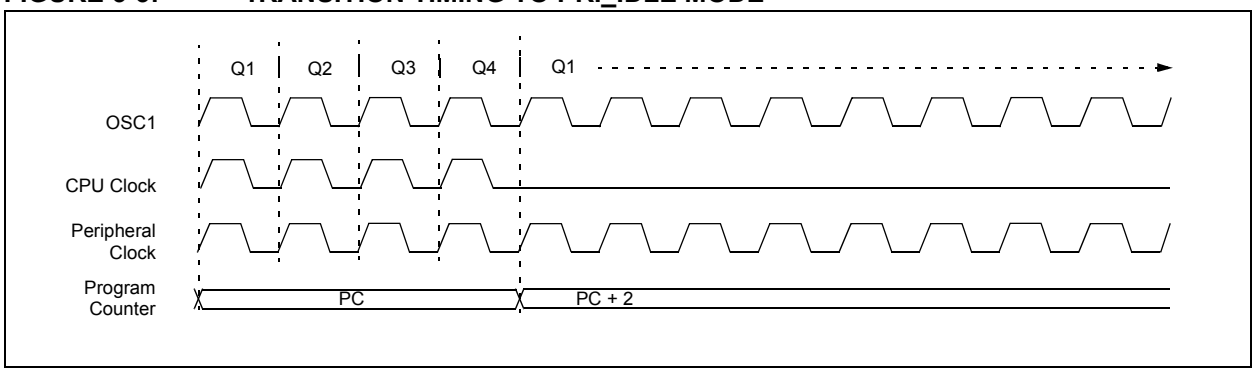

FIGURE 3-4: TRANSITION TIMING FOR WAKE FROM PRI_IDLE MODE

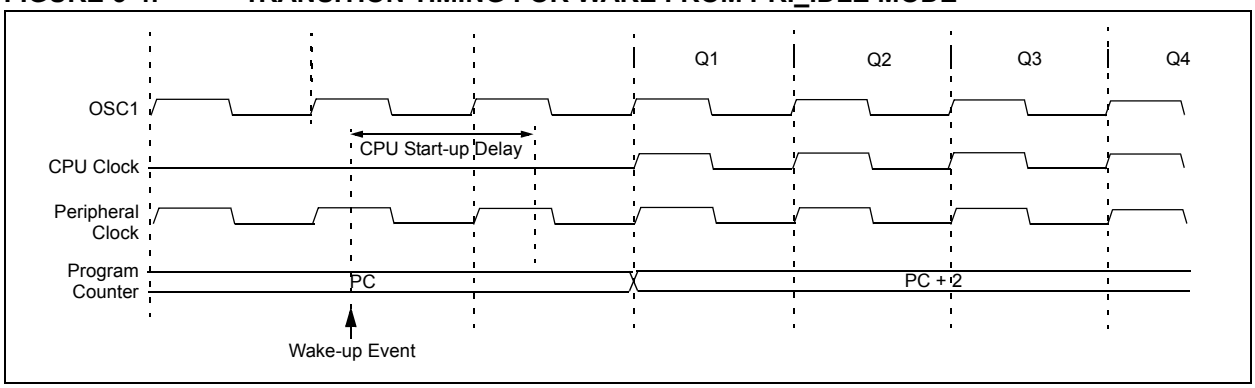

3.3.2 SEC_IDLE MODE

In SEC_IDLE mode, the CPU is disabled but the peripherals continue to be clocked from the Timer1 oscillator. This mode is entered by setting the IDLEN bit, modifying to SCS1:SCS0 = 01 and executing a SLEEP instruction. When the clock source is switched to the Timer1 oscillator (see Figure 3-5), the primary oscillator is shut down, the OSTS bit is cleared and the T1RUN bit is set.

Note:	The Timer1 oscillator should already be running prior to entering SEC_IDLE mode. **If the T1OSCEN bit is not set when trying to set the SCS0 bit (OSCCON<0>), the write to SCS0 will not occur.** If the Timer1 oscillator is enabled but not yet running, peripheral clocks will be delayed until the oscillator has started; in such situations, initial oscillator operation is far from stable and unpredictable operation may result.

When a wake-up event occurs, the peripherals continue to be clocked from the Timer1 oscillator. After a 10 μs delay following the wake-up event, the CPU begins executing code, being clocked by the Timer1 oscillator. The microcontroller operates in SEC_RUN mode until the primary clock becomes ready. When the primary clock becomes ready, a clock switch back to the primary clock occurs (see Figure 3-6). When the clock switch is complete, the T1RUN bit is cleared, the OSTS bit is set and the primary clock is providing the system clock. The IDLEN and SCS bits are not affected by the wake-up; the Timer1 oscillator continues to run.

FIGURE 3-5: TIMING TRANSITION FOR ENTRY TO SEC_IDLE MODE

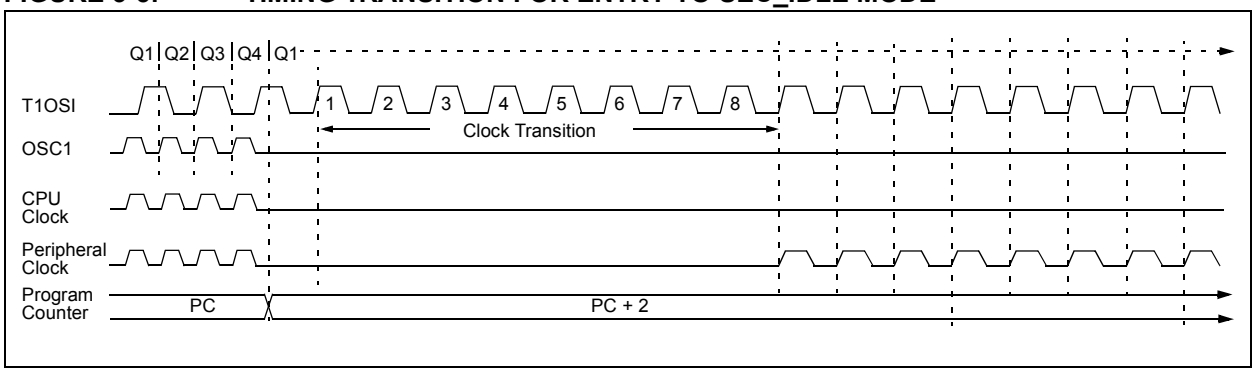

FIGURE 3-6: TIMING TRANSITION FOR WAKE FROM SEC_RUN MODE (HSPLL)

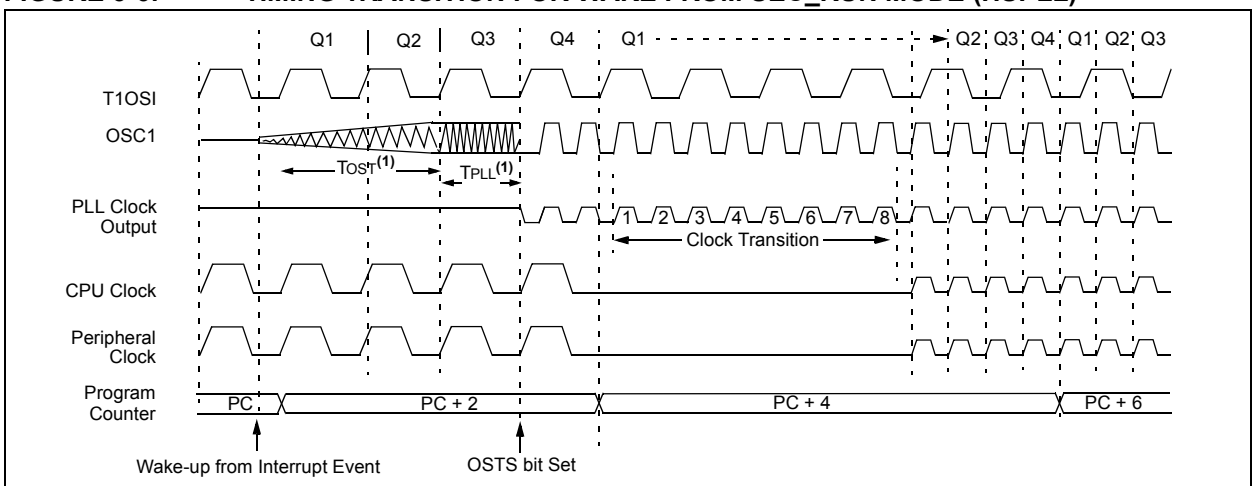

Note 1: TOST = 1024 TOSC; TPLL = 2 ms (approx). These intervals are not shown to scale.

© 2007 Microchip Technology Inc.

3.3.3 RC_IDLE MODE

In RC_IDLE mode, the CPU is disabled but the peripherals continue to be clocked from the internal oscillator block using the INTOSC multiplexer. This mode allows for controllable power conservation during Idle periods.

This mode is entered by setting the IDLEN bit, setting SCS1 (SCS0 is ignored) and executing a SLEEP instruction. The INTOSC multiplexer may be used to select a higher clock frequency by modifying the IRCF bits before executing the SLEEP instruction. When the clock source is switched to the INTOSC multiplexer (see Figure 3-7), the primary oscillator is shut down and the OSTS bit is cleared.

If the IRCF bits are set to a non-zero value (thus enabling the INTOSC output), the IOFS bit becomes set after the INTOSC output becomes stable, in about 1 ms. Clocks to the peripherals continue while the INTOSC source stabilizes. If the IRCF bits were previously at a non-zero value before the SLEEP instruction was executed and the INTOSC source was already stable, the IOFS bit will remain set. If the IRCF bits are all clear, the INTOSC output is not enabled and the IOFS bit will remain clear; there will be no indication of the current clock source.

When a wake-up event occurs, the peripherals continue to be clocked from the INTOSC multiplexer. After a 10 μs delay following the wake-up event, the CPU begins executing code, being clocked by the INTOSC multiplexer. The microcontroller operates in RC_RUN mode until the primary clock becomes ready. When the primary clock becomes ready, a clock switch back to the primary clock occurs (see Figure 3-8). When the clock switch is complete, the IOFS bit is cleared, the OSTS bit is set and the primary clock is providing the system clock. The IDLEN and SCS bits are not affected by the wake-up. The INTRC source will continue to run if either the WDT or the Fail-Safe Clock Monitor is enabled.

FIGURE 3-7: TIMING TRANSITION TO RC_IDLE MODE

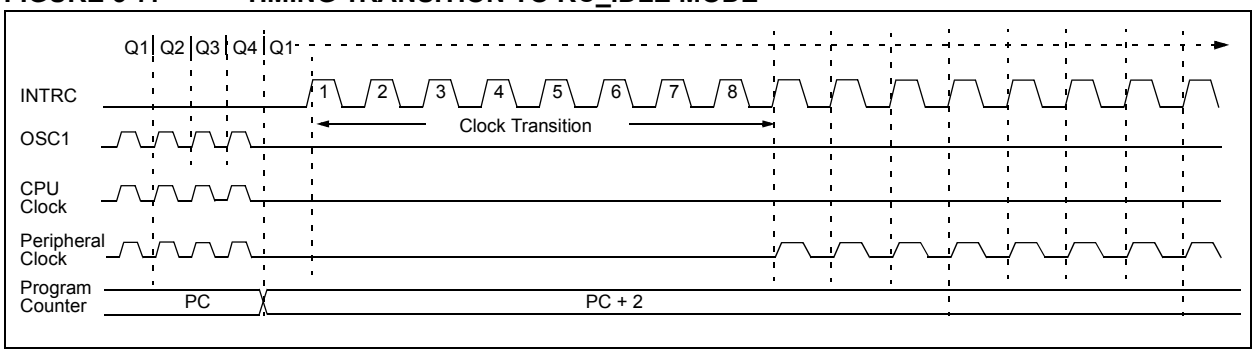

FIGURE 3-8: TIMING TRANSITION FOR WAKE FROM RC_RUN MODE (RC_RUN TO PRI_RUN)

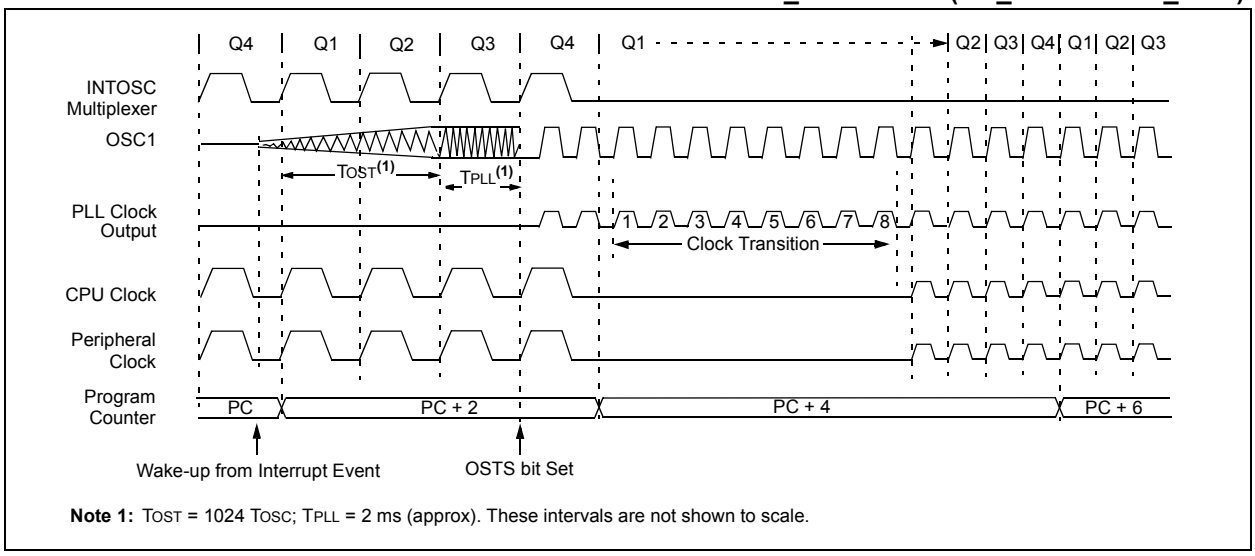

Note 1: TOST = 1024 TOSC; TPLL = 2 ms (approx). These intervals are not shown to scale.

3.4 Run Modes

If the IDLEN bit is clear when a SLEEP instruction is executed, the CPU and peripherals are both clocked from the source selected using the SCS1:SCS0 bits. While these operating modes may not afford the power conservation of Idle or Sleep modes, they do allow the device to continue executing instructions by using a lower frequency clock source. RC_RUN mode also offers the possibility of executing code at a frequency greater than the primary clock.

Wake-up from a power-managed Run mode can be triggered by an interrupt, or any Reset, to return to full-power operation. As the CPU is executing code in Run modes, several additional exits from Run modes are possible. They include exit to Sleep mode, exit to a corresponding Idle mode, and exit by executing a RESET instruction. While the device is in any of the power-managed Run modes, a WDT time-out will result in a WDT Reset.

3.4.1 PRI_RUN MODE

The PRI_RUN mode is the normal full-power execution mode. If the SLEEP instruction is never executed, the microcontroller operates in this mode (a SLEEP instruction is executed to enter all other power-managed modes). All other power-managed modes exit to PRI_RUN mode when an interrupt or WDT time-out occur.

There is no entry to PRI_RUN mode. The OSTS bit is set. The IOFS bit may be set if the internal oscillator block is the primary clock source (see **Section 2.7.1 "Oscillator Control Register"**).

3.4.2 SEC_RUN MODE

The SEC_RUN mode is the compatible mode to the "clock switching" feature offered in other PIC18 devices. In this mode, the CPU and peripherals are clocked from the Timer1 oscillator. This gives users the option of lower power consumption while still using a high-accuracy clock source.

SEC_RUN mode is entered by clearing the IDLEN bit, setting SCS1:SCS0 = 01 and executing a SLEEP instruction. The system clock source is switched to the Timer1 oscillator (see Figure 3-9), the primary oscillator is shut down, the T1RUN bit (T1CON<6>) is set and the OSTS bit is cleared.

Note:	The Timer1 oscillator should already be running prior to entering SEC_RUN mode. **If the T1OSCEN bit is not set when trying to set the SCS0 bit, the write to SCS0 will not occur.** If the Timer1 oscillator is enabled, but not yet running, system clocks will be delayed until the oscillator has started; in such situations, initial oscillator operation is far from stable and unpredictable operation may result.

When a wake-up event occurs, the peripherals and CPU continue to be clocked from the Timer1 oscillator while the primary clock is started. When the primary clock becomes ready, a clock switch back to the primary clock occurs (see Figure 3-6). When the clock switch is complete, the T1RUN bit is cleared, the OSTS bit is set and the primary clock is providing the system clock. The IDLEN and SCS bits are not affected by the wake-up; the Timer1 oscillator continues to run.

Firmware can force an exit from SEC_RUN mode. By clearing the T1OSCEN bit (T1CON<3>), an exit from SEC_RUN back to normal full-power operation is triggered. The Timer1 oscillator will continue to run and provide the system clock even though the T1OSCEN bit is cleared. The primary clock is started. When the primary clock becomes ready, a clock switch back to the primary clock occurs (see Figure 3-6). When the clock switch is complete, the Timer1 oscillator is disabled, the T1RUN bit is cleared, the OSTS bit is set and the primary clock is providing the system clock. The IDLEN and SCS bits are not affected by the wake-up.

FIGURE 3-9: TIMING TRANSITION FOR ENTRY TO SEC_RUN MODE

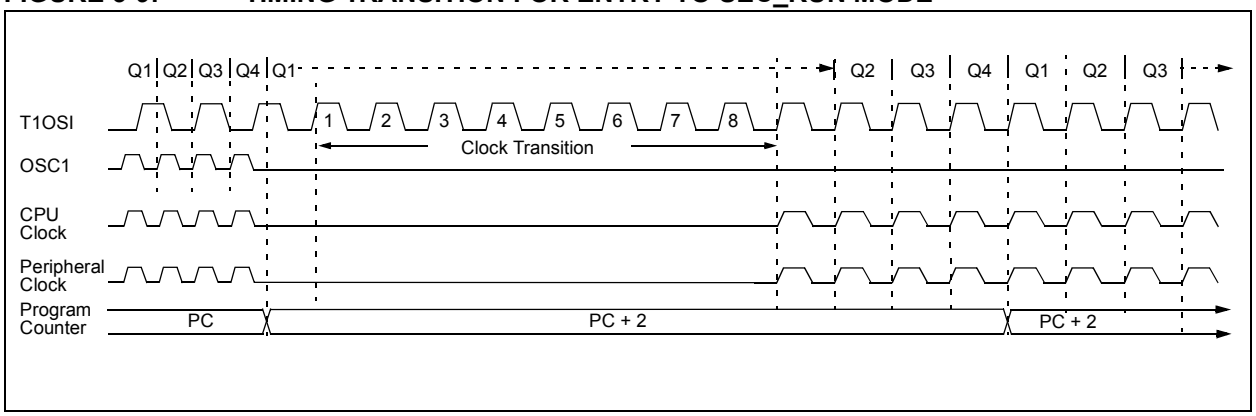

© 2007 Microchip Technology Inc.

3.4.3 RC_RUN MODE

In RC_RUN mode, the CPU and peripherals are clocked from the internal oscillator block using the INTOSC multiplexer and the primary clock is shut down. When using the INTRC source, this mode provides the best power conservation of all the Run modes while still executing code. It works well for user applications which are not highly timing sensitive or do not require high-speed clocks at all times.

If the primary clock source is the internal oscillator block (either of the INTIO1 or INTIO2 oscillators), there are no distinguishable differences between PRI_RUN and RC_RUN modes during execution. However, a clock switch delay will occur during entry to, and exit from, RC_RUN mode. Therefore, if the primary clock source is the internal oscillator block, the use of RC_RUN mode is not recommended.

This mode is entered by clearing the IDLEN bit, setting SCS1 (SCS0 is ignored) and executing a `SLEEP` instruction. The IRCF bits may select the clock frequency before the `SLEEP` instruction is executed. When the clock source is switched to the INTOSC multiplexer (see Figure 3-10), the primary oscillator is shut down and the OSTS bit is cleared.

The IRCF bits may be modified at any time to immediately change the system clock speed. Executing a `SLEEP` instruction is not required to select a new clock frequency from the INTOSC multiplexer.

Note:	Caution should be used when modifying a single IRCF bit. If VDD is less than 3V, it is possible to select a higher clock speed than is supported by the low VDD. Improper device operation may result if the VDD/FOSC specifications are violated.

If the IRCF bits are all clear, the INTOSC output is not enabled and the IOFS bit will remain clear; there will be no indication of the current clock source. The INTRC source is providing the system clocks.

If the IRCF bits are changed from all clear (thus enabling the INTOSC output), the IOFS bit becomes set after the INTOSC output becomes stable. Clocks to the system continue while the INTOSC source stabilizes in approximately 1 ms.

If the IRCF bits were previously at a non-zero value before the `SLEEP` instruction was executed and the INTOSC source was already stable, the IOFS bit will remain set.

When a wake-up event occurs, the system continues to be clocked from the INTOSC multiplexer while the primary clock is started. When the primary clock becomes ready, a clock switch to the primary clock occurs (see Figure 3-8). When the clock switch is complete, the IOFS bit is cleared, the OSTS bit is set and the primary clock is providing the system clock. The IDLEN and SCS bits are not affected by the wake-up. The INTRC source will continue to run if either the WDT or the Fail-Safe Clock Monitor is enabled.

FIGURE 3-10: TIMING TRANSITION TO RC_RUN MODE

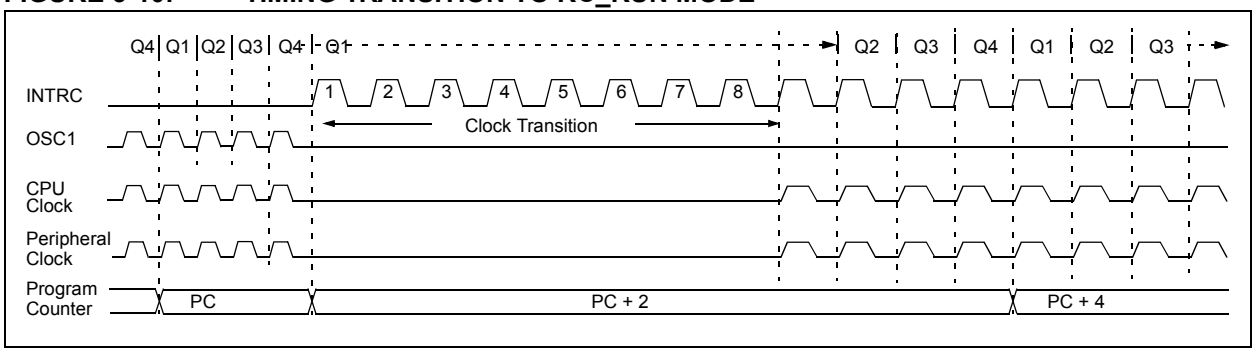

3.4.4 EXIT TO IDLE MODE

An exit from a power-managed Run mode to its corresponding Idle mode is executed by setting the IDLEN bit and executing a SLEEP instruction. The CPU is halted at the beginning of the instruction following the SLEEP instruction. There are no changes to any of the clock source status bits (OSTS, IOFS or T1RUN). While the CPU is halted, the peripherals continue to be clocked from the previously selected clock source.

3.4.5 EXIT TO SLEEP MODE

An exit from a power-managed Run mode to Sleep mode is executed by clearing the IDLEN and SCS1:SCS0 bits and executing a SLEEP instruction. The code is no different than the method used to invoke Sleep mode from the normal operating (full power) mode.

The primary clock and internal oscillator block are disabled. The INTRC will continue to operate if the WDT is enabled. The Timer1 oscillator will continue to run, if enabled, in the T1CON register. All clock source status bits are cleared (OSTS, IOFS and T1RUN).

3.5 Wake-up From Power-Managed Modes

An exit from any of the power-managed modes is triggered by an interrupt, a Reset, or a WDT time-out. This section discusses the triggers that cause exits from power-managed modes. The clocking subsystem actions are discussed in each of the power-managed modes (see **Section 3.2 “Sleep Mode”** through **Section 3.4 “Run Modes”**).

Note:	If application code is timing sensitive, it should wait for the OSTS bit to become set before continuing. Use the interval during the low-power exit sequence (before OSTS is set) to perform timing insensitive “housekeeping” tasks.

Device behavior during Low-Power mode exits is summarized in Table 3-3.

3.5.1 EXIT BY INTERRUPT

Any of the available interrupt sources can cause the device to exit a power-managed mode and resume full-power operation. To enable this functionality, an interrupt source must be enabled by setting its enable bit in one of the INTCON or PIE registers. The exit sequence is initiated when the corresponding interrupt flag bit is set. On all exits from Lower Power mode by interrupt, code execution branches to the interrupt vector if the GIE/GIEH bit (INTCON<7>) is set. Otherwise, code execution continues or resumes without branching (see **Section 9.0 “Interrupts”**).

© 2007 Microchip Technology Inc.

TABLE 3-3: ACTIVITY AND EXIT DELAY ON WAKE-UP FROM SLEEP MODE OR ANY IDLE MODE (BY CLOCK SOURCES)

Clock in Power-Managed Mode	Primary System Clock	Power-Managed Mode Exit Delay	Clock Ready Status Bit (OSCCON)	Activity During Wake-up from Power-Managed Mode	
				Exit by Interrupt	Exit by Reset
Primary System Clock (PRI_IDLE mode)	LP, XT, HS	5-10 μs(5)	OSTS	CPU and peripherals clocked by primary clock and executing instructions.	Not clocked or Two-Speed Start-up (if enabled)(3).
	HSPLL				
	EC, RC, INTRC(1)		—		
	INTOSC(2)		IOFS		
T1OSC or INTRC(1)	LP, XT, HS	OST	OSTS	CPU and peripherals clocked by selected power-managed mode clock and executing instructions until primary clock source becomes ready.	
	HSPLL	OST + 2 ms			
	EC, RC, INTRC(1)	5-10 μs(5)	—		
	INTOSC(2)	5-10 μs(4)	IOFS		
INTOSC(2)	LP, XT, HS	OST	OSTS		
	HSPLL	OST + 2 ms			
	EC, RC, INTRC(1)	5-10 μs(5)	—		
	INTOSC(2)	None	IOFS		
Sleep mode	LP, XT, HS	OST	OSTS	Not clocked or Two-Speed Start-up (if enabled) until primary clock source becomes ready(3).	
	HSPLL	OST + 2 ms			
	EC, RC, INTRC(1)	5-10 μs(5)	—		
	INTOSC(2)	5-10 μs(4)	IOFS		

Note 1: In this instance, refers specifically to the INTRC clock source.

2: Includes both the INTOSC 8 MHz source and postscaler derived frequencies.

3: Two-Speed Start-up is covered in greater detail in **Section 23.3 "Two-Speed Start-up"**.

4: Execution continues during the INTOSC stabilization period.

5: Required delay when waking from Sleep and all Idle modes. This delay runs concurrently with any other required delays (see **Section 3.3 "Idle Modes"**).

3.5.2 EXIT BY RESET

Normally, the device is held in Reset by the Oscillator Start-up Timer (OST) until the primary clock (defined in Configuration Register 1H) becomes ready. At that time, the OSTS bit is set and the device begins executing code.

Code execution can begin before the primary clock becomes ready. If either the Two-Speed Start-up (see **Section 23.3 "Two-Speed Start-up"**) or Fail-Safe Clock Monitor (see **Section 23.4 "Fail-Safe Clock Monitor"**) are enabled in Configuration Register 1H, the device may begin execution as soon as the Reset source has cleared. Execution is clocked by the INTOSC multiplexer driven by the internal oscillator block. Since the OSCCON register is cleared following all Resets, the INTRC clock source is selected. A higher speed clock may be selected by modifying the IRCF bits in the OSCCON register. Execution is clocked by the internal oscillator block until either the primary clock becomes ready, or a power-managed mode is entered before the primary clock becomes ready; the primary clock is then shut down.

3.5.3 EXIT BY WDT TIME-OUT

A WDT time-out will cause different actions depending on which power-managed mode the device is in when the time-out occurs.

If the device is not executing code (all Idle modes and Sleep mode), the time-out will result in a wake-up from the power-managed mode (see **Section 3.2 "Sleep Mode"** through **Section 3.4 "Run Modes"**).

If the device is executing code (all Run modes), the time-out will result in a WDT Reset (see **Section 23.2 "Watchdog Timer (WDT)"**).

The WDT timer and postscaler are cleared by executing a `SLEEP` or `CLRWDT` instruction, the loss of a currently selected clock source (if the Fail-Safe Clock Monitor is enabled) and modifying the IRCF bits in the OSCCON register if the internal oscillator block is the system clock source.

3.5.4 EXIT WITHOUT AN OSCILLATOR START-UP DELAY

Certain exits from power-managed modes do not invoke the OST at all. These are:

- PRI_IDLE mode, where the primary clock source is not stopped; and
- the primary clock source is not any of the LP, XT, HS or HSPLL modes.

In these cases, the primary clock source either does not require an oscillator start-up delay, since it is already running (PRI_IDLE), or normally does not require an oscillator start-up delay (RC, EC and INTIO Oscillator modes).

However, a fixed delay (approximately 10 μs) following the wake-up event is required when leaving Sleep and Idle modes. This delay is required for the CPU to prepare for execution. Instruction execution resumes on the first clock cycle following this delay.

3.6 INTOSC Frequency Drift

The factory calibrates the internal oscillator block output (INTOSC) for 8 MHz. However, this frequency may drift as V_{DD} or temperature changes, which can affect the controller operation in a variety of ways.

It is possible to adjust the INTOSC frequency by modifying the value in the OSCTUNE register. This has the side effect that the INTRC clock source frequency is also affected. However, the features that use the INTRC source often do not require an exact frequency. These features include the Fail-Safe Clock Monitor, the Watchdog Timer and the RC_RUN/RC_IDLE modes when the INTRC clock source is selected.

Being able to adjust the INTOSC requires knowing when an adjustment is required, in which direction it should be made and in some cases, how large a change is needed. Three examples are shown but other techniques may be used.

© 2007 Microchip Technology Inc.

3.6.1 EXAMPLE – USART

An adjustment may be indicated when the USART begins to generate framing errors or receives data with errors while in Asynchronous mode. Framing errors indicate that the system clock frequency is too high – try decrementing the value in the OSCTUNE register to reduce the system clock frequency. Errors in data may suggest that the system clock speed is too low – increment OSCTUNE.

3.6.2 EXAMPLE – TIMERS

This technique compares system clock speed to some reference clock. Two timers may be used; one timer is clocked by the peripheral clock, while the other is clocked by a fixed reference source, such as the Timer1 oscillator.

Both timers are cleared but the timer clocked by the reference generates interrupts. When an interrupt occurs, the internally clocked timer is read and both timers are cleared. If the internally clocked timer value is greater than expected, then the internal oscillator block is running too fast – decrement OSCTUNE.

3.6.3 EXAMPLE – CCP IN CAPTURE MODE

A CCP module can use free-running Timer1 (or Timer3), clocked by the internal oscillator block and an external event with a known period (i.e., AC power frequency). The time of the first event is captured in the CCPRxH:CCPRxL registers and is recorded for use later. When the second event causes a capture, the time of the first event is subtracted from the time of the second event. Since the period of the external event is known, the time difference between events can be calculated.

If the measured time is much greater than the calculated time, the internal oscillator block is running too fast – decrement OSCTUNE. If the measured time is much less than the calculated time, the internal oscillator block is running too slow – increment OSCTUNE.

NOTES:

© 2007 Microchip Technology Inc.

4.0 RESET

The PIC18F2X20/4X20 devices differentiate between various kinds of Reset:

a) Power-on Reset (POR)
b) $\overline{\text{MCLR}}$ Reset while executing instructions
c) $\overline{\text{MCLR}}$ Reset when not executing instructions
d) Watchdog Timer (WDT) Reset (during execution)
e) Programmable Brown-out Reset (BOR)
f) RESET Instruction
g) Stack Full Reset
h) Stack Underflow Reset

Most registers are unaffected by a Reset. Their status is unknown on POR and unchanged by all other Resets. The other registers are forced to a "Reset state" depending on the type of Reset that occurred.

Most registers are not affected by a WDT wake-up since this is viewed as the resumption of normal operation. Status bits from the RCON register, $\overline{\text{RI}}$, $\overline{\text{TO}}$, $\overline{\text{PD}}$, $\overline{\text{POR}}$ and $\overline{\text{BOR}}$, are set or cleared differently in different Reset situations as indicated in Table 4-2. These bits are used in software to determine the nature of the Reset. See Table 4-3 for a full description of the Reset states of all registers.

A simplified block diagram of the on-chip Reset circuit is shown in Figure 4-1.

The enhanced MCU devices have a $\overline{\text{MCLR}}$ noise filter in the $\overline{\text{MCLR}}$ Reset path. The filter will detect and ignore small pulses.

The $\overline{\text{MCLR}}$ pin is not driven low by any internal Resets, including the WDT.

The $\overline{\text{MCLR}}$ input provided by the $\overline{\text{MCLR}}$ pin can be disabled with the MCLRE bit in Configuration Register 3H (CONFIG3H<7>). See **Section 23.1 "Configuration Bits"** for more information.

FIGURE 4-1: SIMPLIFIED BLOCK DIAGRAM OF ON-CHIP RESET CIRCUIT

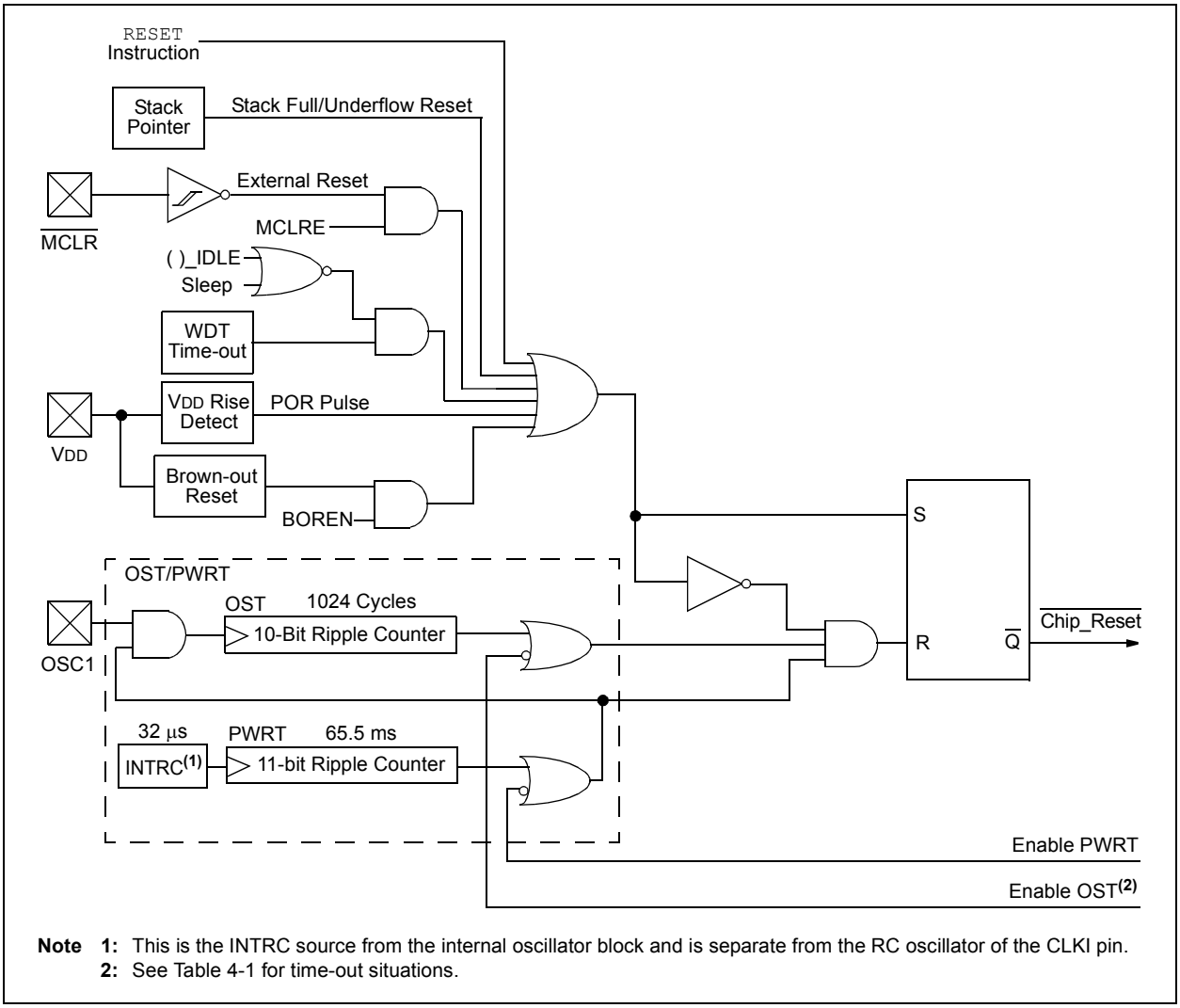

Note 1: This is the INTRC source from the internal oscillator block and is separate from the RC oscillator of the CLKI pin.
2: See Table 4-1 for time-out situations.

4.1 Power-on Reset (POR)

A Power-on Reset pulse is generated on-chip when VDD rise is detected. To take advantage of the POR circuitry, just tie the MCLR pin through a resistor (1k to 10 kΩ) to VDD. This will eliminate external RC components usually needed to create a Power-on Reset delay. A minimum rise rate for VDD is specified (parameter D004). For a slow rise time, see Figure 4-2.

When the device starts normal operation (i.e., exits the Reset condition), device operating parameters (voltage, frequency, temperature, etc.) must be met to ensure operation. If these conditions are not met, the device must be held in Reset until the operating conditions are met.

FIGURE 4-2: EXTERNAL POWER-ON RESET CIRCUIT (FOR SLOW VDD POWER-UP)

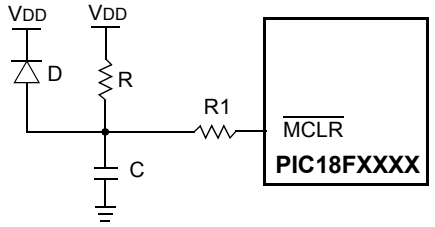

Note 1: External Power-on Reset circuit is required only if the VDD power-up slope is too slow. The diode D helps discharge the capacitor quickly when VDD powers down.

2: R < 40 kΩ is recommended to make sure that the voltage drop across R does not violate the device's electrical specification.

3: R1 ≥ 1 kΩ will limit any current flowing into MCLR from external capacitor C, in the event of MCLR/VPP pin breakdown, due to Electrostatic Discharge (ESD) or Electrical Overstress (EOS).

4.2 Power-up Timer (PWRT)

The Power-up Timer (PWRT) of the PIC18F2X20/4X20 devices is an 11-bit counter, which uses the INTRC source as the clock input. This yields a count of 2048 x 32 μs = 65.6 ms. While the PWRT is counting, the device is held in Reset.

The power-up time delay depends on the INTRC clock and will vary from chip-to-chip due to temperature and process variation. See DC parameter #33 for details.

The PWRT is enabled by clearing Configuration bit, PWRTEN.

4.3 Oscillator Start-up Timer (OST)

The Oscillator Start-up Timer (OST) provides a 1024 oscillator cycle (from OSC1 input) delay after the PWRT delay is over (parameter #33). This ensures that the crystal oscillator or resonator has started and stabilized.

The OST time-out is invoked only for XT, LP, HS and HSPLL modes and only on Power-on Reset, or on exit from most power-managed modes.

4.4 PLL Lock Time-out

With the PLL enabled in its PLL mode, the time-out sequence following a Power-on Reset is slightly different from other oscillator modes. A portion of the Power-up Timer is used to provide a fixed time-out that is sufficient for the PLL to lock to the main oscillator frequency. This PLL lock time-out (TPLL) is typically 2 ms and follows the oscillator start-up time-out.

4.5 Brown-out Reset (BOR)

A Configuration bit, BOREN, can disable (if clear/programmed) or enable (if set) the Brown-out Reset circuitry. If VDD falls below VBOR (parameter D005) for greater than TBOR (parameter #35), the brown-out situation will reset the chip. A Reset may not occur if VDD falls below VBOR for less than TBOR. The chip will remain in Brown-out Reset until VDD rises above VBOR. If the Power-up Timer is enabled, it will be invoked after VDD rises above VBOR; it then will keep the chip in Reset for an additional time delay TPWRT (parameter #33). If VDD drops below VBOR while the Power-up Timer is running, the chip will go back into a Brown-out Reset and the Power-up Timer will be initialized. Once VDD rises above VBOR, the Power-up Timer will execute the additional time delay. Enabling BOR Reset does not automatically enable the PWRT.

4.6 Time-out Sequence

On power-up, the time-out sequence is as follows: First, after the POR pulse has cleared, PWRT time-out is invoked (if enabled). Then, the OST is activated. The total time-out will vary based on oscillator configuration and the status of the PWRT. For example, in RC mode with the PWRT disabled, there will be no time-out at all. Figure 4-3, Figure 4-4, Figure 4-5, Figure 4-6 and Figure 4-7 depict time-out sequences on power-up.

Since the time-outs occur from the POR pulse, if MCLR is kept low long enough, all time-outs will expire. Bringing MCLR high will begin execution immediately (Figure 4-5). This is useful for testing purposes or to synchronize more than one PIC18FXXXX device operating in parallel.

Table 4-2 shows the Reset conditions for some Special Function Registers, while Table 4-3 shows the Reset conditions for all the registers.

© 2007 Microchip Technology Inc.

TABLE 4-1: TIME-OUT IN VARIOUS SITUATIONS

Oscillator Configuration	Power-up[2] and Brown-out		Exit from Power-Managed Mode
	$\overline{\text{PWRTEN}}$ = 0	$\overline{\text{PWRTEN}}$ = 1	
HSPLL	66 ms[1] + 1024 TOSC + 2 ms[2]	1024 TOSC + 2 ms[2]	1024 TOSC + 2 ms[2]
HS, XT, LP	66 ms[1] + 1024 TOSC	1024 TOSC	1024 TOSC
EC, ECIO	66 ms[1]	—	—
RC, RCIO	66 ms[1]	—	—
INTIO1, INTIO2	66 ms[1]	—	—

Note 1: 66 ms (65.5 ms) is the nominal Power-up Timer (PWRT) delay.

2: 2 ms is the nominal time required for the 4x PLL to lock.

REGISTER 4-1: RCON REGISTER BITS AND POSITIONS

R/W-0	U-0	U-0	R/W-1	R-1	R-1	R/W-0	R/W-0
IPEN	—	—	$\overline{\text{RI}}$	$\overline{\text{TO}}$	$\overline{\text{PD}}$	$\overline{\text{POR}}$	$\overline{\text{BOR}}$
bit 7							bit 0

Note: Refer to **Section 5.14 "RCON Register"** for bit definitions.

TABLE 4-2: STATUS BITS, THEIR SIGNIFICANCE AND THE INITIALIZATION CONDITION FOR RCON REGISTER

Condition	Program Counter	RCON Register	$\overline{\text{RI}}$	$\overline{\text{TO}}$	$\overline{\text{PD}}$	$\overline{\text{POR}}$	$\overline{\text{BOR}}$	STKFUL	STKUNF
Power-on Reset	0000h	0--1 1100	1	1	1	0	0	0	0
RESET Instruction	0000h	0--0 uuuu	0	u	u	u	u	u	u
Brown-out Reset	0000h	0--1 11u-	1	1	1	u	0	u	u
$\overline{\text{MCLR}}$ Reset during power-managed Run modes	0000h	0--u 1uuu	u	1	u	u	u	u	u
$\overline{\text{MCLR}}$ Reset during power-managed Idle modes and Sleep mode	0000h	0--u 10uu	u	1	0	u	u	u	u
WDT time-out during full power or power-managed Run mode	0000h	0--u 0uuu	u	0	u	u	u	u	u
$\overline{\text{MCLR}}$ Reset during full-power execution	0000h	0--u uuuu	u	u	u	u	u	u	u
Stack Full Reset (STVREN = 1)								1	u
Stack Underflow Reset (STVREN = 1)								u	1
Stack Underflow Error (not an actual Reset, STVREN = 0)	0000h	u--u uuuu	u	u	u	u	u	u	1
WDT time-out during power-managed Idle or Sleep modes	PC + 2	u--u 00uu	u	0	0	u	u	u	u
Interrupt exit from power-managed modes	PC + 2	u--u u0uu	u	u	0	u	u	u	u

Legend: u = unchanged, x = unknown, - = unimplemented bit, read as '0'

Note 1: When the wake-up is due to an interrupt and the GIEH or GIEL bits are set, the PC is loaded with the interrupt vector (0x000008h or 0x000018h).

TABLE 4-3: INITIALIZATION CONDITIONS FOR ALL REGISTERS

Register	Applicable Devices				Power-on Reset, Brown-out Reset	MCLR Resets WDT Reset RESET Instruction Stack Resets	Wake-up via WDT or Interrupt
TOSU	2220	2320	4220	4320	---0 0000	---0 0000	---0 uuuu(3)
TOSH	2220	2320	4220	4320	0000 0000	0000 0000	uuuu uuuu(3)
TOSL	2220	2320	4220	4320	0000 0000	0000 0000	uuuu uuuu(3)
STKPTR	2220	2320	4220	4320	uu-0 0000	00-0 0000	uu-u uuuu(3)
PCLATU	2220	2320	4220	4320	---0 0000	---0 0000	---u uuuu
PCLATH	2220	2320	4220	4320	0000 0000	0000 0000	uuuu uuuu
PCL	2220	2320	4220	4320	0000 0000	0000 0000	PC + 2(2)
TBLPTRU	2220	2320	4220	4320	--00 0000	--00 0000	--uu uuuu
TBLPTRH	2220	2320	4220	4320	0000 0000	0000 0000	uuuu uuuu
TBLPTRL	2220	2320	4220	4320	0000 0000	0000 0000	uuuu uuuu
TABLAT	2220	2320	4220	4320	0000 0000	0000 0000	uuuu uuuu
PRODH	2220	2320	4220	4320	xxxx xxxx	uuuu uuuu	uuuu uuuu
PRODL	2220	2320	4220	4320	xxxx xxxx	uuuu uuuu	uuuu uuuu
INTCON	2220	2320	4220	4320	0000 000x	0000 000u	uuuu uuuu(1)
INTCON2	2220	2320	4220	4320	1111 -1-1	1111 -1-1	uuuu -u-u(1)
INTCON3	2220	2320	4220	4320	11-0 0-00	11-0 0-00	uu-u u-uu(1)
INDF0	2220	2320	4220	4320	N/A	N/A	N/A
POSTINC0	2220	2320	4220	4320	N/A	N/A	N/A
POSTDEC0	2220	2320	4220	4320	N/A	N/A	N/A
PREINC0	2220	2320	4220	4320	N/A	N/A	N/A
PLUSW0	2220	2320	4220	4320	N/A	N/A	N/A
FSR0H	2220	2320	4220	4320	---- xxxx	---- uuuu	---- uuuu
FSR0L	2220	2320	4220	4320	xxxx xxxx	uuuu uuuu	uuuu uuuu
WREG	2220	2320	4220	4320	xxxx xxxx	uuuu uuuu	uuuu uuuu
INDF1	2220	2320	4220	4320	N/A	N/A	N/A
POSTINC1	2220	2320	4220	4320	N/A	N/A	N/A
POSTDEC1	2220	2320	4220	4320	N/A	N/A	N/A
PREINC1	2220	2320	4220	4320	N/A	N/A	N/A
PLUSW1	2220	2320	4220	4320	N/A	N/A	N/A

Legend: u = unchanged, x = unknown, - = unimplemented bit, read as '0', q = value depends on condition. Shaded cells indicate conditions do not apply for the designated device.

Note 1: One or more bits in the INTCONx or PIRx registers will be affected (to cause wake-up).

2: When the wake-up is due to an interrupt and the GIEL or GIEH bit is set, the PC is loaded with the interrupt vector (0008h or 0018h).

3: When the wake-up is due to an interrupt and the GIEL or GIEH bit is set, the TOSU, TOSH and TOSL are updated with the current value of the PC. The STKPTR is modified to point to the next location in the hardware stack.

4: See Table 4-2 for Reset value for specific condition.

5: Bits 6 and 7 of PORTA, LATA and TRISA are enabled, depending on the oscillator mode selected. When not enabled as PORTA pins, they are disabled and read '0'.

© 2007 Microchip Technology Inc.

TABLE 4-3: INITIALIZATION CONDITIONS FOR ALL REGISTERS (CONTINUED)

Register	Applicable Devices				Power-on Reset, Brown-out Reset	$\overline{\text{MCLR}}$ Resets WDT Reset RESET Instruction Stack Resets	Wake-up via WDT or Interrupt
FSR1H	2220	2320	4220	4320	---- xxxx	---- uuuu	---- uuuu
FSR1L	2220	2320	4220	4320	xxxx xxxx	uuuu uuuu	uuuu uuuu
BSR	2220	2320	4220	4320	---- 0000	---- 0000	---- uuuu
INDF2	2220	2320	4220	4320	N/A	N/A	N/A
POSTINC2	2220	2320	4220	4320	N/A	N/A	N/A
POSTDEC2	2220	2320	4220	4320	N/A	N/A	N/A
PREINC2	2220	2320	4220	4320	N/A	N/A	N/A
PLUSW2	2220	2320	4220	4320	N/A	N/A	N/A
FSR2H	2220	2320	4220	4320	---- xxxx	---- uuuu	---- uuuu
FSR2L	2220	2320	4220	4320	xxxx xxxx	uuuu uuuu	uuuu uuuu
STATUS	2220	2320	4220	4320	---x xxxx	---u uuuu	---u uuuu
TMR0H	2220	2320	4220	4320	0000 0000	0000 0000	uuuu uuuu
TMR0L	2220	2320	4220	4320	xxxx xxxx	uuuu uuuu	uuuu uuuu
T0CON	2220	2320	4220	4320	1111 1111	1111 1111	uuuu uuuu
OSCCON	2220	2320	4220	4320	0000 q000	0000 q000	uuuu qquu
LVDCON	2220	2320	4220	4320	--00 0101	--00 0101	--uu uuuu
WDTCON	2220	2320	4220	4320	---- ---0	---- ---0	---- ---u
RCON(4)	2220	2320	4220	4320	0--1 11q0	0--q qquu	u--u qquu
TMR1H	2220	2320	4220	4320	xxxx xxxx	uuuu uuuu	uuuu uuuu
TMR1L	2220	2320	4220	4320	xxxx xxxx	uuuu uuuu	uuuu uuuu
T1CON	2220	2320	4220	4320	0000 0000	u0uu uuuu	uuuu uuuu
TMR2	2220	2320	4220	4320	0000 0000	0000 0000	uuuu uuuu
PR2	2220	2320	4220	4320	1111 1111	1111 1111	1111 1111
T2CON	2220	2320	4220	4320	-000 0000	-000 0000	-uuu uuuu
SSPBUF	2220	2320	4220	4320	xxxx xxxx	uuuu uuuu	uuuu uuuu
SSPADD	2220	2320	4220	4320	0000 0000	0000 0000	uuuu uuuu
SSPSTAT	2220	2320	4220	4320	0000 0000	0000 0000	uuuu uuuu
SSPCON1	2220	2320	4220	4320	0000 0000	0000 0000	uuuu uuuu
SSPCON2	2220	2320	4220	4320	0000 0000	0000 0000	uuuu uuuu

Legend: u = unchanged, x = unknown, - = unimplemented bit, read as '0', q = value depends on condition. Shaded cells indicate conditions do not apply for the designated device.

Note 1: One or more bits in the INTCONx or PIRx registers will be affected (to cause wake-up).

2: When the wake-up is due to an interrupt and the GIEL or GIEH bit is set, the PC is loaded with the interrupt vector (0008h or 0018h).

3: When the wake-up is due to an interrupt and the GIEL or GIEH bit is set, the TOSU, TOSH and TOSL are updated with the current value of the PC. The STKPTR is modified to point to the next location in the hardware stack.

4: See Table 4-2 for Reset value for specific condition.

5: Bits 6 and 7 of PORTA, LATA and TRISA are enabled, depending on the oscillator mode selected. When not enabled as PORTA pins, they are disabled and read '0'.

TABLE 4-3: INITIALIZATION CONDITIONS FOR ALL REGISTERS (CONTINUED)

Register	Applicable Devices				Power-on Reset, Brown-out Reset	$\overline{\text{MCLR}}$ Resets WDT Reset RESET Instruction Stack Resets	Wake-up via WDT or Interrupt
ADRESH	2220	2320	4220	4320	xxxx xxxx	uuuu uuuu	uuuu uuuu
ADRESL	2220	2320	4220	4320	xxxx xxxx	uuuu uuuu	uuuu uuuu
ADCON0	2220	2320	4220	4320	--00 0000	--00 0000	--uu uuuu
ADCON1	2220	2320	4220	4320	--00 0000	--00 0000	--uu uuuu
ADCON2	2220	2320	4220	4320	0-00 0000	0-00 0000	u-uu uuuu
CCPR1H	2220	2320	4220	4320	xxxx xxxx	uuuu uuuu	uuuu uuuu
CCPR1L	2220	2320	4220	4320	xxxx xxxx	uuuu uuuu	uuuu uuuu
CCP1CON	2220	2320	4220	4320	0000 0000	0000 0000	uuuu uuuu
	2220	2320	4220	4320	--00 0000	--00 0000	--uu uuuu
CCPR2H	2220	2320	4220	4320	xxxx xxxx	uuuu uuuu	uuuu uuuu
CCPR2L	2220	2320	4220	4320	xxxx xxxx	uuuu uuuu	uuuu uuuu
CCP2CON	2220	2320	4220	4320	--00 0000	--00 0000	--uu uuuu
PWM1CON	2220	2320	4220	4320	0000 0000	0000 0000	uuuu uuuu
ECCPAS	2220	2320	4220	4320	0000 0000	0000 0000	uuuu uuuu
CVRCON	2220	2320	4220	4320	000- 0000	000- 0000	uuu- uuuu
CMCON	2220	2320	4220	4320	0000 0111	0000 0111	uuuu uuuu
TMR3H	2220	2320	4220	4320	xxxx xxxx	uuuu uuuu	uuuu uuuu
TMR3L	2220	2320	4220	4320	xxxx xxxx	uuuu uuuu	uuuu uuuu
T3CON	2220	2320	4220	4320	0000 0000	uuuu uuuu	uuuu uuuu
SPBRG	2220	2320	4220	4320	0000 0000	0000 0000	uuuu uuuu
RCREG	2220	2320	4220	4320	0000 0000	0000 0000	uuuu uuuu
TXREG	2220	2320	4220	4320	0000 0000	0000 0000	uuuu uuuu
TXSTA	2220	2320	4220	4320	0000 -010	0000 -010	uuuu -uuu
RCSTA	2220	2320	4220	4320	0000 000x	0000 000x	uuuu uuuu
EEADR	2220	2320	4220	4320	0000 0000	0000 0000	uuuu uuuu
EEDATA	2220	2320	4220	4320	0000 0000	0000 0000	uuuu uuuu
EECON1	2220	2320	4220	4320	xx-0 x000	uu-0 u000	uu-0 u000
EECON2	2220	2320	4220	4320	0000 0000	0000 0000	0000 0000

Legend: u = unchanged, x = unknown, - = unimplemented bit, read as '0', q = value depends on condition. Shaded cells indicate conditions do not apply for the designated device.

Note 1: One or more bits in the INTCONx or PIRx registers will be affected (to cause wake-up).

2: When the wake-up is due to an interrupt and the GIEL or GIEH bit is set, the PC is loaded with the interrupt vector (0008h or 0018h).

3: When the wake-up is due to an interrupt and the GIEL or GIEH bit is set, the TOSU, TOSH and TOSL are updated with the current value of the PC. The STKPTR is modified to point to the next location in the hardware stack.

4: See Table 4-2 for Reset value for specific condition.

5: Bits 6 and 7 of PORTA, LATA and TRISA are enabled, depending on the oscillator mode selected. When not enabled as PORTA pins, they are disabled and read '0'.

© 2007 Microchip Technology Inc.

TABLE 4-3: INITIALIZATION CONDITIONS FOR ALL REGISTERS (CONTINUED)

Register	Applicable Devices				Power-on Reset, Brown-out Reset	$\overline{\text{MCLR}}$ Resets WDT Reset RESET Instruction Stack Resets	Wake-up via WDT or Interrupt
IPR2	2220	2320	4220	4320	11-1 1111	11-1 1111	uu-u uuuu
PIR2	2220	2320	4220	4320	00-0 0000	00-0 0000	uu-u uuuu(1)
PIE2	2220	2320	4220	4320	00-0 0000	00-0 0000	uu-u uuuu
IPR1	2220	2320	4220	4320	1111 1111	1111 1111	uuuu uuuu
	2220	2320	4220	4320	-111 1111	-111 1111	-uuu uuuu
PIR1	2220	2320	4220	4320	0000 0000	0000 0000	uuuu uuuu(1)
	2220	2320	4220	4320	-000 0000	-000 0000	-uuu uuuu(1)
PIE1	2220	2320	4220	4320	0000 0000	0000 0000	uuuu uuuu
	2220	2320	4220	4320	-000 0000	-000 0000	-uuu uuuu
OSCTUNE	2220	2320	4220	4320	--00 0000	--00 0000	--uu uuuu
OSCTUN2	2220	2320	4220	4320	0-00 0000	0-00 0000	u-uu uuuu
TRISE	2220	2320	4220	4320	0000 -111	0000 -111	uuuu -uuu
TRISD	2220	2320	4220	4320	1111 1111	1111 1111	uuuu uuuu
TRISC	2220	2320	4220	4320	1111 1111	1111 1111	uuuu uuuu
TRISB	2220	2320	4220	4320	1111 1111	1111 1111	uuuu uuuu
TRISA(5)	2220	2320	4220	4320	1111 1111(5)	1111 1111(5)	uuuu uuuu(5)
LATE	2220	2320	4220	4320	---- -xxx	---- -uuu	---- -uuu
LATD	2220	2320	4220	4320	xxxx xxxx	uuuu uuuu	uuuu uuuu
LATC	2220	2320	4220	4320	xxxx xxxx	uuuu uuuu	uuuu uuuu
LATB	2220	2320	4220	4320	xxxx xxxx	uuuu uuuu	uuuu uuuu
LATA(5)	2220	2320	4220	4320	xxxx xxxx(5)	uuuu uuuu(5)	uuuu uuuu(5)
PORTE	2220	2320	4220	4320	---- xxxx	---- xxxx	---- uuuu
PORTD	2220	2320	4220	4320	xxxx xxxx	uuuu uuuu	uuuu uuuu
PORTC	2220	2320	4220	4320	xxxx xxxx	uuuu uuuu	uuuu uuuu
PORTB	2220	2320	4220	4320	xxxx xxxx	uuuu uuuu	uuuu uuuu
PORTA(5)	2220	2320	4220	4320	xx0x 0000(5)	uu0u 0000(5)	uuuu uuuu(5)

Legend: u = unchanged, x = unknown, - = unimplemented bit, read as '0', q = value depends on condition. Shaded cells indicate conditions do not apply for the designated device.

Note 1: One or more bits in the INTCONx or PIRx registers will be affected (to cause wake-up).

2: When the wake-up is due to an interrupt and the GIEL or GIEH bit is set, the PC is loaded with the interrupt vector (0008h or 0018h).

3: When the wake-up is due to an interrupt and the GIEL or GIEH bit is set, the TOSU, TOSH and TOSL are updated with the current value of the PC. The STKPTR is modified to point to the next location in the hardware stack.

4: See Table 4-2 for Reset value for specific condition.

5: Bits 6 and 7 of PORTA, LATA and TRISA are enabled, depending on the oscillator mode selected. When not enabled as PORTA pins, they are disabled and read '0'.

FIGURE 4-3: TIME-OUT SEQUENCE ON POWER-UP (MCLR TIED TO VDD, VDD RISE < TPWRT)

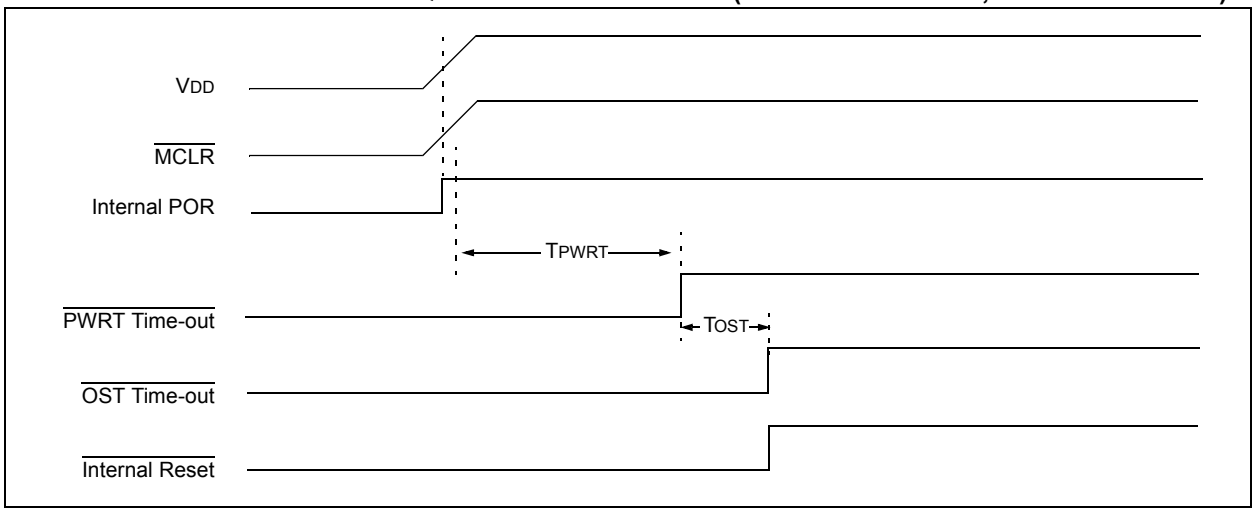

FIGURE 4-4: TIME-OUT SEQUENCE ON POWER-UP (MCLR NOT TIED TO VDD): CASE 1

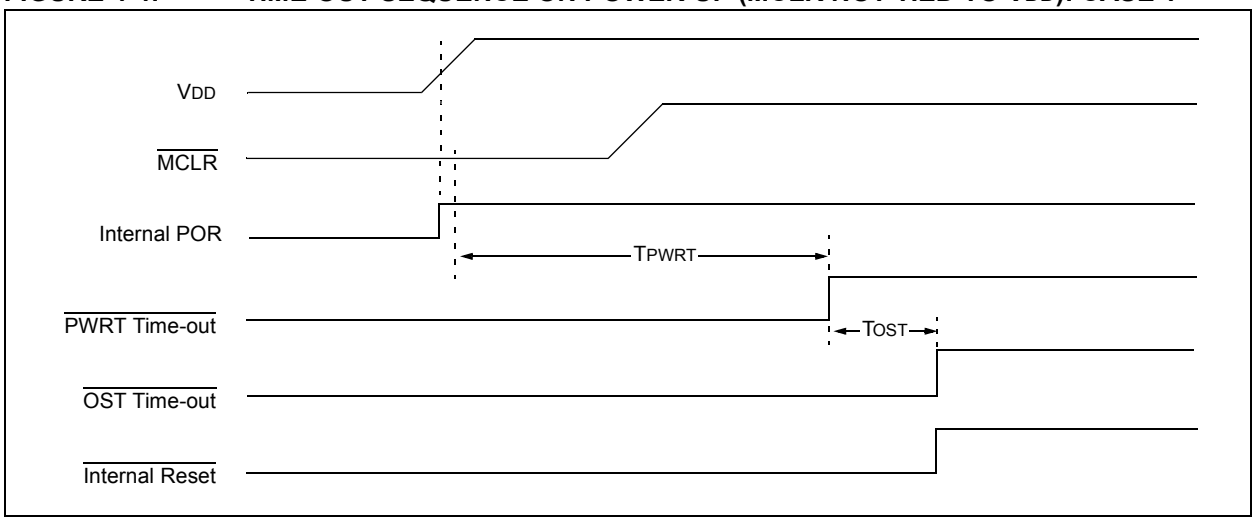

FIGURE 4-5: TIME-OUT SEQUENCE ON POWER-UP (MCLR NOT TIED TO VDD): CASE 2

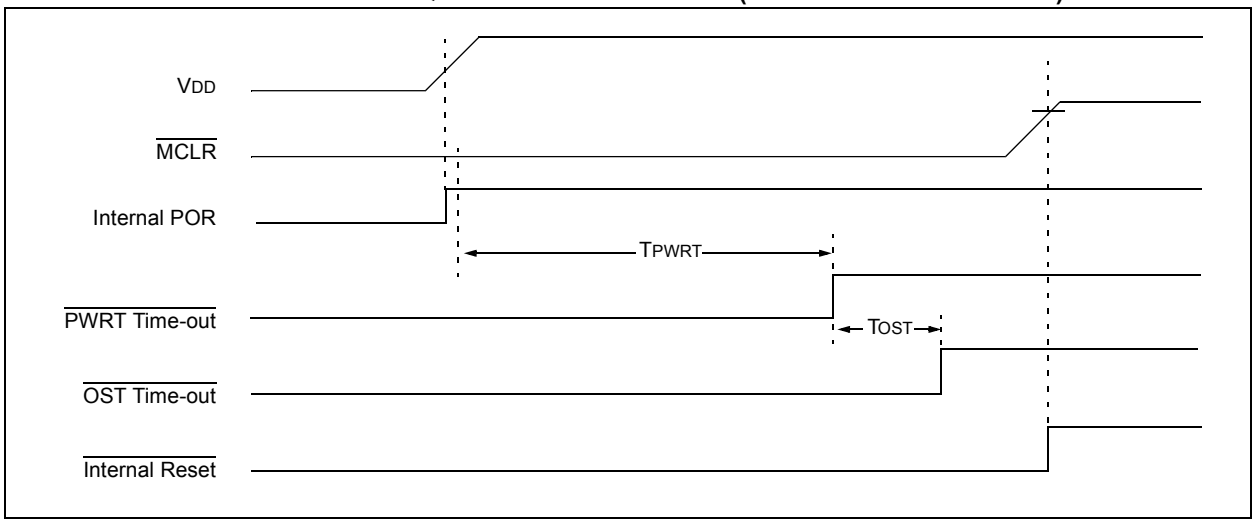

© 2007 Microchip Technology Inc.

FIGURE 4-6: SLOW RISE TIME ($\overline{MCLR}$ TIED TO V_{DD}, V_{DD} RISE > T_{PWRT})

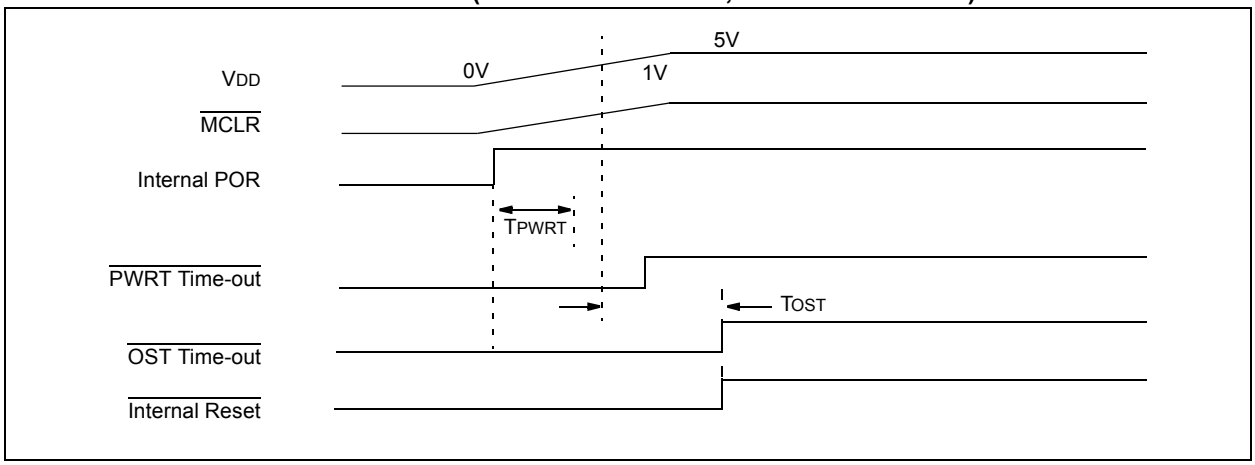

FIGURE 4-7: TIME-OUT SEQUENCE ON POR W/ PLL ENABLED ($\overline{MCLR}$ TIED TO V_{DD})

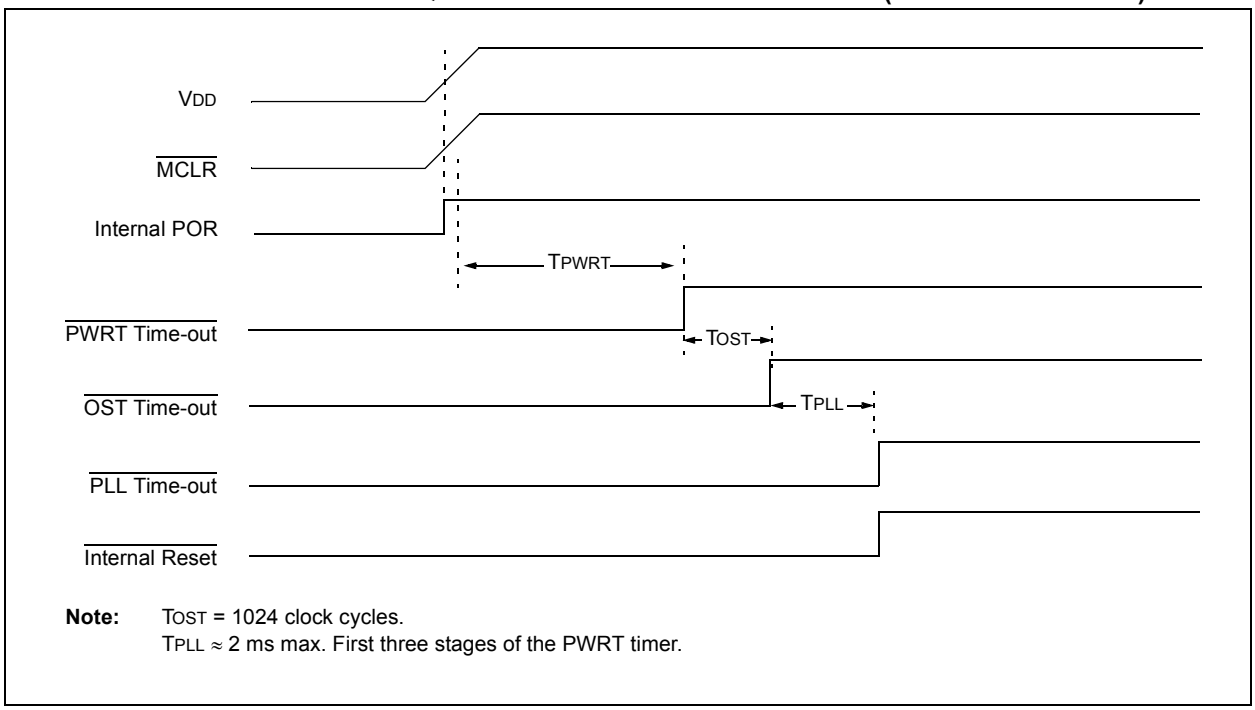

Note: T_{OST} = 1024 clock cycles.
$T_{PLL} \approx$ 2 ms max. First three stages of the PWRT timer.

NOTES:

© 2007 Microchip Technology Inc.

5.0 MEMORY ORGANIZATION

There are three memory types in enhanced MCU devices. These memory types are:

- Program Memory
- Data RAM
- Data EEPROM

Data and program memory use separate busses which allow for concurrent access of these types.

Additional detailed information for Flash program memory and data EEPROM is provided in **Section 6.0 "Flash Program Memory"** and **Section 7.0 "Data EEPROM Memory"**, respectively.

5.1 Program Memory Organization

A 21-bit program counter is capable of addressing the 2-Mbyte program memory space. Accessing a location between the physically implemented memory and the 2-Mbyte address will cause a read of all '0's (a NOP instruction).

The PIC18F2220 and PIC18F4220 each have 4 Kbytes of Flash memory and can store up to 2,048 single-word instructions.

The PIC18F2320 and PIC18F4320 each have 8 Kbytes of Flash memory and can store up to 4,096 single-word instructions.

The Reset vector address is at 0000h and the interrupt vector addresses are at 0008h and 0018h.

The Program Memory Maps for PIC18F2220/4220 and PIC18F2320/4320 devices are shown in Figure 5-1 and Figure 5-2, respectively.

FIGURE 5-1: PROGRAM MEMORY MAP AND STACK FOR PIC18F2220/4220

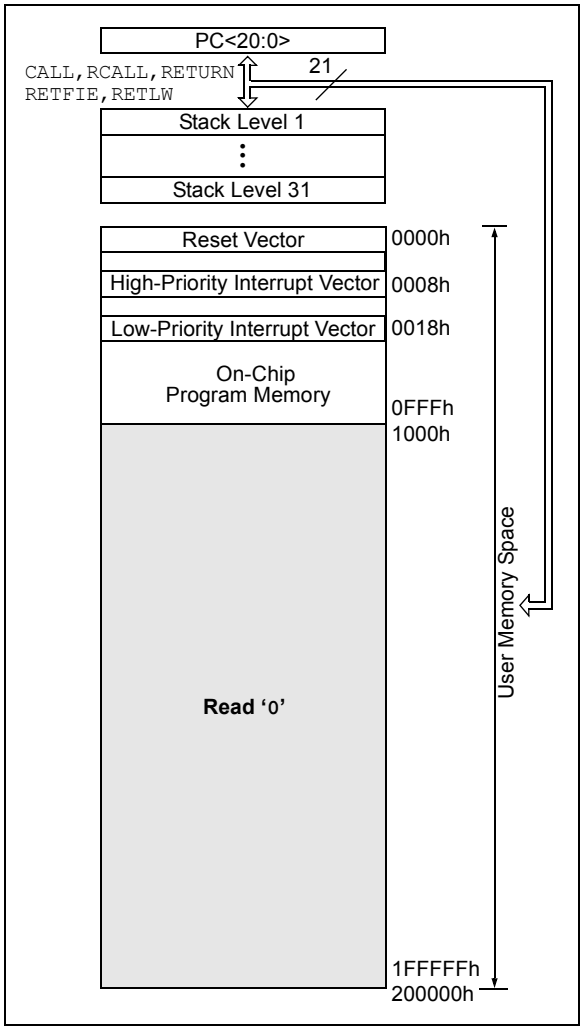

FIGURE 5-2: PROGRAM MEMORY MAP AND STACK FOR PIC18F2320/4320

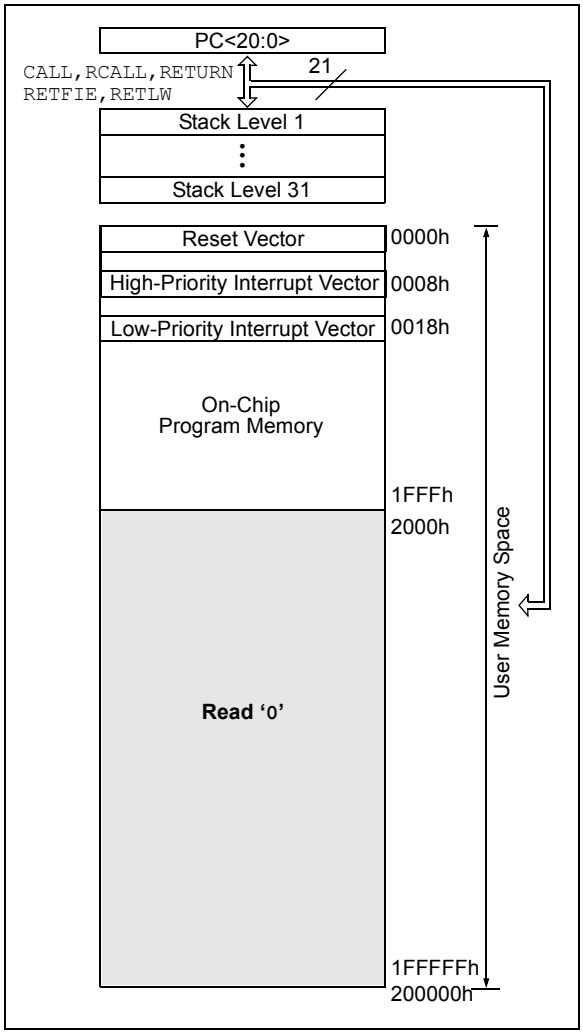

5.2 Return Address Stack

The return address stack allows any combination of up to 31 program calls and interrupts to occur. The PC (Program Counter) is pushed onto the stack when a CALL or RCALL instruction is executed or an interrupt is Acknowledged. The PC value is pulled off the stack on a RETURN, RETLW or a RETFIE instruction. PCLATU and PCLATH are not affected by any of the RETURN or CALL instructions.

The stack operates as a 31-word by 21-bit RAM and a 5-bit Stack Pointer, with the Stack Pointer initialized to 00000b after all Resets. There is no RAM associated with Stack Pointer, 00000b. This is only a Reset value. During a CALL type instruction, causing a push onto the stack, the Stack Pointer is first incremented and the RAM location pointed to by the Stack Pointer is written with the contents of the PC (already pointing to the instruction following the CALL). During a RETURN type instruction, causing a pop from the stack, the contents of the RAM location pointed to by the STKPTR are transferred to the PC and then the Stack Pointer is decremented.

The stack space is not part of either program or data space. The Stack Pointer is readable and writable and the address on the top of the stack is readable and writable through the top-of-stack Special File Registers. Data can also be pushed to, or popped from, the stack using the top-of-stack SFRs. Status bits indicate if the stack is full, has overflowed or underflowed.

5.2.1 TOP-OF-STACK ACCESS

The top of the stack is readable and writable. Three register locations, TOSU, TOSH and TOSL, hold the contents of the stack location pointed to by the STKPTR register (Figure 5-3). This allows users to implement a software stack if necessary. After a CALL, RCALL or interrupt, the software can read the pushed value by reading the TOSU, TOSH and TOSL registers. These values can be placed on a user-defined software stack. At return time, the software can replace the TOSU, TOSH and TOSL and do a return.

The user must disable the global interrupt enable bits while accessing the stack to prevent inadvertent stack corruption.

5.2.2 RETURN STACK POINTER (STKPTR)

The STKPTR register (Register 5-1) contains the Stack Pointer value, the STKFUL (Stack Full) status bit and the STKUNF (Stack Underflow) status bits. The value of the Stack Pointer can be 0 through 31. The Stack Pointer increments before values are pushed onto the stack and decrements after values are popped off the stack. At Reset, the Stack Pointer value will be zero. The user may read and write the Stack Pointer value. This feature can be used by a Real-Time Operating System for return stack maintenance.

After the PC is pushed onto the stack 31 times (without popping any values off the stack), the STKFUL bit is set. The STKFUL bit is cleared by software or by a POR.

The action that takes place when the stack becomes full depends on the state of the STVREN (Stack Overflow Reset Enable) Configuration bit. (Refer to **Section 23.1 "Configuration Bits"** for a description of the device Configuration bits.) If STVREN is set (default), the 31st push will push the (PC + 2) value onto the stack, set the STKFUL bit and reset the device. The STKFUL bit will remain set and the Stack Pointer will be set to zero.

If STVREN is cleared, the STKFUL bit will be set on the 31st push and the Stack Pointer will increment to 31. Any additional pushes will not overwrite the 31st push, and STKPTR will remain at 31.

When the stack has been popped enough times to unload the stack, the next pop will return a value of zero to the PC and sets the STKUNF bit, while the Stack Pointer remains at zero. The STKUNF bit will remain set until cleared by software or a POR occurs.

Note:	Returning a value of zero to the PC on an underflow has the effect of vectoring the program to the Reset vector, where the stack conditions can be verified and appropriate actions can be taken. This is not the same as a Reset, as the contents of the SFRs are not affected.

FIGURE 5-3: RETURN ADDRESS STACK AND ASSOCIATED REGISTERS

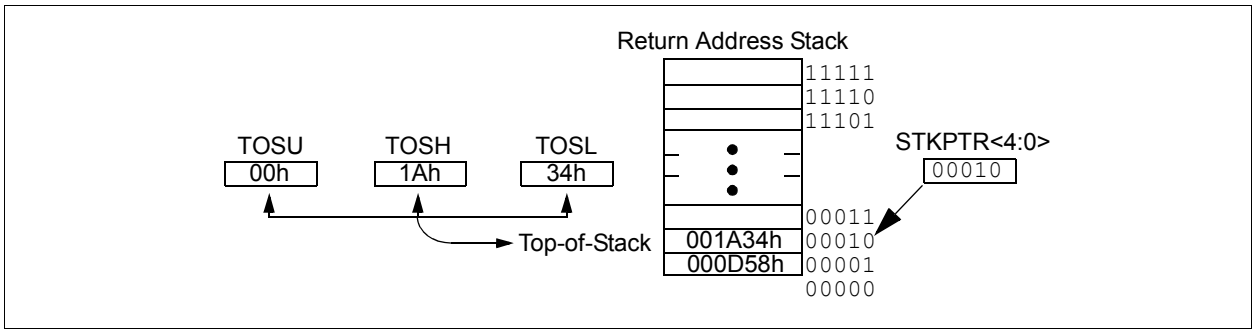

© 2007 Microchip Technology Inc.

REGISTER 5-1: STKPTR: STACK POINTER REGISTER

R/C-0	R/C-0	U-0	R/W-0	R/W-0	R/W-0	R/W-0	R/W-0
STKFUL(1)	STKUNF(1)	—	SP4	SP3	SP2	SP1	SP0
bit 7							bit 0

Legend:	C = Clearable bit		
R = Readable bit	W = Writable bit	U = Unimplemented bit, read as '0'	
-n = Value at POR	'1' = Bit is set	'0' = Bit is cleared	x = Bit is unknown

bit 7 **STKFUL:** Stack Full Flag bit(1)
1 = Stack became full or overflowed
0 = Stack has not become full or overflowed

bit 6 **STKUNF:** Stack Underflow Flag bit(1)
1 = Stack underflow occurred
0 = Stack underflow did not occur

bit 5 **Unimplemented:** Read as '0'

bit 4-0 **SP4:SP0:** Stack Pointer Location bits

Note 1: Bit 7 and bit 6 are cleared by user software or by a POR.

5.2.3 PUSH AND POP INSTRUCTIONS

Since the Top-of-Stack (TOS) is readable and writable, the ability to push values onto the stack and pull values off the stack, without disturbing normal program execution, is a desirable option. To push the current PC value onto the stack, a PUSH instruction can be executed. This will increment the Stack Pointer and load the current PC value onto the stack. TOSU, TOSH and TOSL can then be modified to place data or a return address on the stack.

The ability to pull the TOS value off of the stack and replace it with the value that was previously pushed onto the stack, without disturbing normal execution, is achieved by using the POP instruction. The POP instruction discards the current TOS by decrementing the Stack Pointer. The previous value pushed onto the stack then becomes the TOS value.

5.2.4 STACK FULL/UNDERFLOW RESETS

These Resets are enabled by programming the STVREN bit in Configuration Register 4L. When the STVREN bit is cleared, a full or underflow condition will set the appropriate STKFUL or STKUNF bit but not cause a device Reset. When the STVREN bit is set, a full or underflow condition will set the appropriate STKFUL or STKUNF bit and then cause a device Reset. The STKFUL or STKUNF bits are cleared by the user software or a POR Reset.

5.3 Fast Register Stack

A “fast return” option is available for interrupts. A Fast Register Stack is provided for the STATUS, WREG and BSR registers and are only one in depth. The stack is not readable or writable and is loaded with the current value of the corresponding register when the processor vectors for an interrupt. The values in the registers are then loaded back into the working registers if the RETFIE, FAST instruction is used to return from the interrupt.

All interrupt sources will push values into the stack registers. If both low and high-priority interrupts are enabled, the stack registers cannot be used reliably to return from low-priority interrupts. If a high-priority interrupt occurs while servicing a low-priority interrupt, the stack register values stored by the low-priority interrupt will be overwritten. Users must save the key registers in software during a low-priority interrupt.

If interrupt priority is not used, all interrupts may use the Fast Register Stack for returns from interrupt.

If no interrupts are used, the Fast Register Stack can be used to restore the STATUS, WREG and BSR registers at the end of a subroutine call. To use the Fast Register Stack for a subroutine call, a CALL label, FAST instruction must be executed to save the STATUS, WREG and BSR registers to the Fast Register Stack. A RETURN, FAST instruction is then executed to restore these registers from the Fast Register Stack.

Example 5-1 shows a source code example that uses the Fast Register Stack during a subroutine call and return.

EXAMPLE 5-1: FAST REGISTER STACK CODE EXAMPLE

```
CALL SUB1, FAST    ;STATUS, WREG, BSR
                   ;SAVED IN FAST REGISTER
                   ;STACK
       •
       •

SUB1   •
       •
   RETURN FAST     ;RESTORE VALUES SAVED
                   ;IN FAST REGISTER STACK
```

5.4 PCL, PCLATH and PCLATU

The Program Counter (PC) specifies the address of the instruction to fetch for execution. The PC is 21-bits wide. The low byte, known as the PCL register, is both readable and writable. The high byte, or PCH register, contains the PC<15:8> bits and is not directly readable or writable. Updates to the PCH register may be performed through the PCLATH register. The upper byte is called PCU. This register contains the PC<20:16> bits and is not directly readable or writable. Updates to the PCU register may be performed through the PCLATU register.

The contents of PCLATH and PCLATU will be transferred to the program counter by any operation that writes PCL. Similarly, the upper two bytes of the program counter will be transferred to PCLATH and PCLATU by an operation that reads PCL. This is useful for computed offsets to the PC (see **Section 5.8.1 “Computed GOTO”**).

The PC addresses bytes in the program memory. To prevent the PC from becoming misaligned with word instructions, the LSB of PCL is fixed to a value of ‘0’. The PC increments by 2 to address sequential instructions in the program memory.

The CALL, RCALL, GOTO and program branch instructions write to the program counter directly. For these instructions, the contents of PCLATH and PCLATU are not transferred to the program counter.

© 2007 Microchip Technology Inc.

5.5 Clocking Scheme/Instruction Cycle

The clock input (from OSC1) is internally divided by four to generate four non-overlapping quadrature clocks, namely Q1, Q2, Q3 and Q4. Internally, the Program Counter (PC) is incremented every Q1, the instruction is fetched from the program memory and latched into the instruction register in Q4. The instruction is decoded and executed during the following Q1 through Q4. The clocks and instruction execution flow are shown in Figure 5-4.

5.6 Instruction Flow/Pipelining

An “Instruction Cycle” consists of four Q cycles (Q1, Q2, Q3 and Q4). The instruction fetch and execute are pipelined such that fetch takes one instruction cycle, while decode and execute take another instruction cycle. However, due to the pipelining, each instruction effectively executes in one cycle. If an instruction causes the program counter to change (e.g., `GOTO`), then two cycles are required to complete the instruction (Example 5-2).

A fetch cycle begins with the Program Counter (PC) incrementing in Q1.

In the execution cycle, the fetched instruction is latched into the “Instruction Register” (IR) in cycle Q1. This instruction is then decoded and executed during the Q2, Q3 and Q4 cycles. Data memory is read during Q2 (operand read) and written during Q4 (destination write).

FIGURE 5-4: CLOCK/INSTRUCTION CYCLE

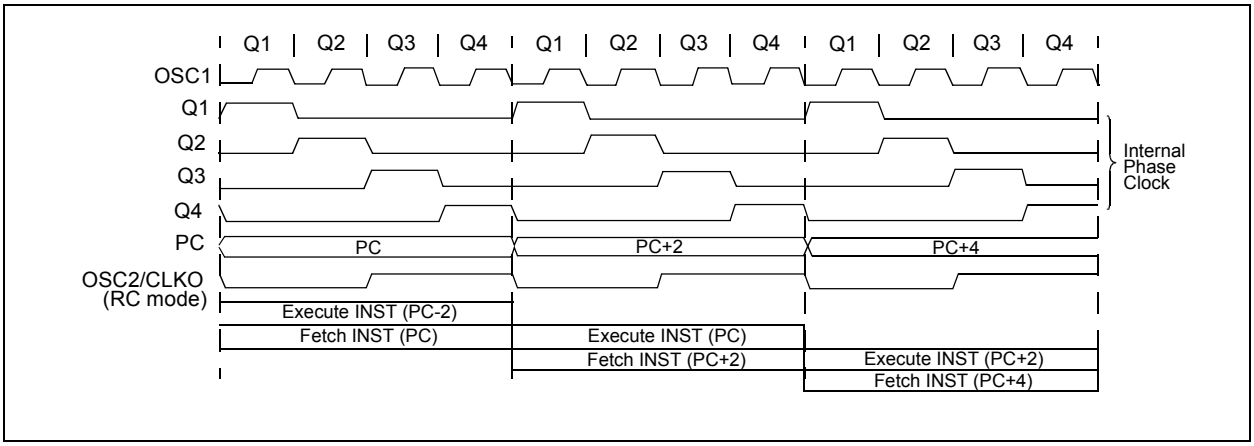

EXAMPLE 5-2: INSTRUCTION PIPELINE FLOW

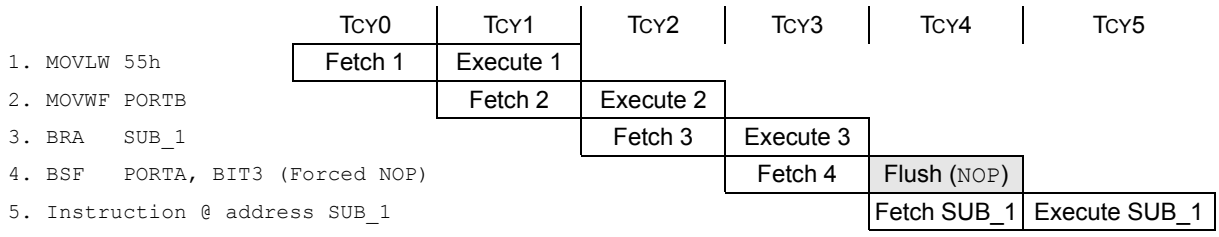

All instructions are single cycle, except for any program branches. These take two cycles since the fetch instruction is “flushed” from the pipeline while the new instruction is being fetched and then executed.

5.7 Instructions in Program Memory

The program memory is addressed in bytes. Instructions are stored as two bytes or four bytes in program memory. The Least Significant Byte of an instruction word is always stored in a program memory location with an even address (LSB = 0). Figure 5-5 shows an example of how instruction words are stored in the program memory. To maintain alignment with instruction boundaries, the PC increments in steps of 2 and the LSB will always read '0' (see **Section 5.4 "PCL, PCLATH and PCLATU"**).

The CALL and GOTO instructions have the absolute program memory address embedded into the instruction. Since instructions are always stored on word boundaries, the data contained in the instruction is a word address. The word address is written to PC<20:1>, which accesses the desired byte address in program memory. Instruction #2 in Figure 5-5 shows how the instruction 'GOTO 000006h' is encoded in the program memory. Program branch instructions, which encode a relative address offset, operate in the same manner. The offset value stored in a branch instruction represents the number of single-word instructions that the PC will be offset by. **Section 24.0 "Instruction Set Summary"** provides further details of the instruction set.

FIGURE 5-5: INSTRUCTIONS IN PROGRAM MEMORY

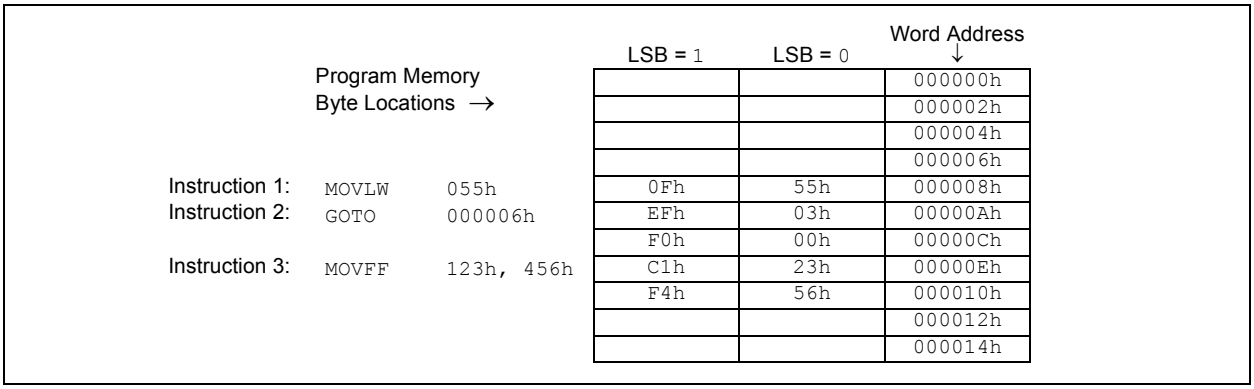

5.7.1 TWO-WORD INSTRUCTIONS

PIC18F2X20/4X20 devices have four two-word instructions: MOVFF, CALL, GOTO and LFSR. The second word of these instructions has the 4 MSBs set to '1's and is decoded as a NOP instruction. The lower 12 bits of the second word contain data to be used by the instruction. If the first word of the instruction is executed, the data in the second word is accessed. If the second word of the instruction is executed by itself (first word was skipped), it will execute as a NOP. This action is necessary when the two-word instruction is preceded by a conditional instruction that results in a skip operation. A program example that demonstrates this concept is shown in Example 5-3. Refer to **Section 24.0 "Instruction Set Summary"** for further details of the instruction set.

EXAMPLE 5-3: TWO-WORD INSTRUCTIONS

CASE 1:

Object Code	Source Code	
0110 0110 0000 0000	TSTFSZ REG1	; is RAM location 0?
1100 0001 0010 0011	MOVFF REG1, REG2	; No, skip this word
1111 0100 0101 0110		; Execute this word as a NOP
0010 0100 0000 0000	ADDWF REG3	; continue code

CASE 2:

Object Code	Source Code	
0110 0110 0000 0000	TSTFSZ REG1	; is RAM location 0?
1100 0001 0010 0011	MOVFF REG1, REG2	; Yes, execute this word
1111 0100 0101 0110		; 2nd word of instruction
0010 0100 0000 0000	ADDWF REG3	; continue code

© 2007 Microchip Technology Inc.

5.8 Look-up Tables

Look-up tables are implemented two ways:

- Computed GOTO
- Table Reads

5.8.1 COMPUTED GOTO

A computed GOTO is accomplished by adding an offset to the program counter. An example is shown in Example 5-4.

A look-up table can be formed with an ADDWF PCL instruction and a group of RETLW 0xnn instructions. WREG is loaded with an offset into the table before executing a call to that table. The first instruction of the called routine is the ADDWF PCL instruction. The next instruction executed will be one of the RETLW 0xnn instructions that returns the value 0xnn to the calling function.

The offset value (in WREG) specifies the number of bytes that the program counter should advance and should be multiples of 2 (LSB = 0).

In this method, only one data byte may be stored in each instruction location and room on the return address stack is required.

EXAMPLE 5-4: COMPUTED GOTO USING AN OFFSET VALUE

```
        MOVFW   OFFSET
        CALL    TABLE
ORG     0xnn00
TABLE   ADDWF   PCL
        RETLW   0xnn
        RETLW   0xnn
        RETLW   0xnn
        •
        •
        •
```

5.8.2 TABLE READS/TABLE WRITES

A better method of storing data in program memory allows two bytes of data to be stored in each instruction location.

Look-up table data may be stored two bytes per program word by using table reads and writes. The Table Pointer (TBLPTR) specifies the byte address and the Table Latch (TABLAT) contains the data that is read from, or written to program memory. Data is transferred to/from program memory, one byte at a time.

The Table Read/Table Write operation is discussed further in **Section 6.1 "Table Reads and Table Writes"**.

5.9 Data Memory Organization

The data memory is implemented as static RAM. Each register in the data memory has a 12-bit address, allowing up to 4096 bytes of data memory. Figure 5-6 shows the data memory organization for the PIC18F2X20/4X20 devices.

The data memory map is divided into as many as 16 banks that contain 256 bytes each. The lower 4 bits of the Bank Select Register (BSR<3:0>) select which bank will be accessed. The upper 4 bits of the BSR are not implemented.

The data memory contains Special Function Registers (SFR) and General Purpose Registers (GPR). The SFRs are used for control and status of the controller and peripheral functions, while GPRs are used for data storage and scratch pad operations in the user's application. The SFRs start at the last location of Bank 15 (FFFh) and extend towards F80h. Any remaining space beyond the SFRs in the bank may be implemented as GPRs. GPRs start at the first location of Bank 0 and grow upwards. Any read of an unimplemented location will read as '0's.

The entire data memory may be accessed directly or indirectly. Direct addressing may require the use of the BSR register. Indirect addressing requires the use of a File Select Register (FSRn) and a corresponding Indirect File Operand (INDFn). Each FSR holds a 12-bit address value that can be used to access any location in the data memory map without banking. See **Section 5.12 "Indirect Addressing, INDF and FSR Registers"** for indirect addressing details.

The instruction set and architecture allow operations across all banks. This may be accomplished by indirect addressing or by the use of the MOVFF instruction. The MOVFF instruction is a two-word/two-cycle instruction that moves a value from one register to another.

To ensure that commonly used registers (SFRs and select GPRs) can be accessed in a single cycle, regardless of the current BSR values, an Access Bank is implemented. A segment of Bank 0 and a segment of Bank 15 comprise the Access RAM. **Section 5.10 "Access Bank"** provides a detailed description of the Access RAM.

5.9.1 GENERAL PURPOSE REGISTER FILE

Enhanced MCU devices may have banked memory in the GPR area. GPRs are not initialized by a Power-on Reset and are unchanged on all other Resets.

Data RAM is available for use as GPR registers by all instructions. The second half of Bank 15 (F80h to FFFh) contains SFRs. All other banks of data memory contain GPRs, starting with Bank 0.

FIGURE 5-6: DATA MEMORY MAP FOR PIC18F2X20/4X20 DEVICES

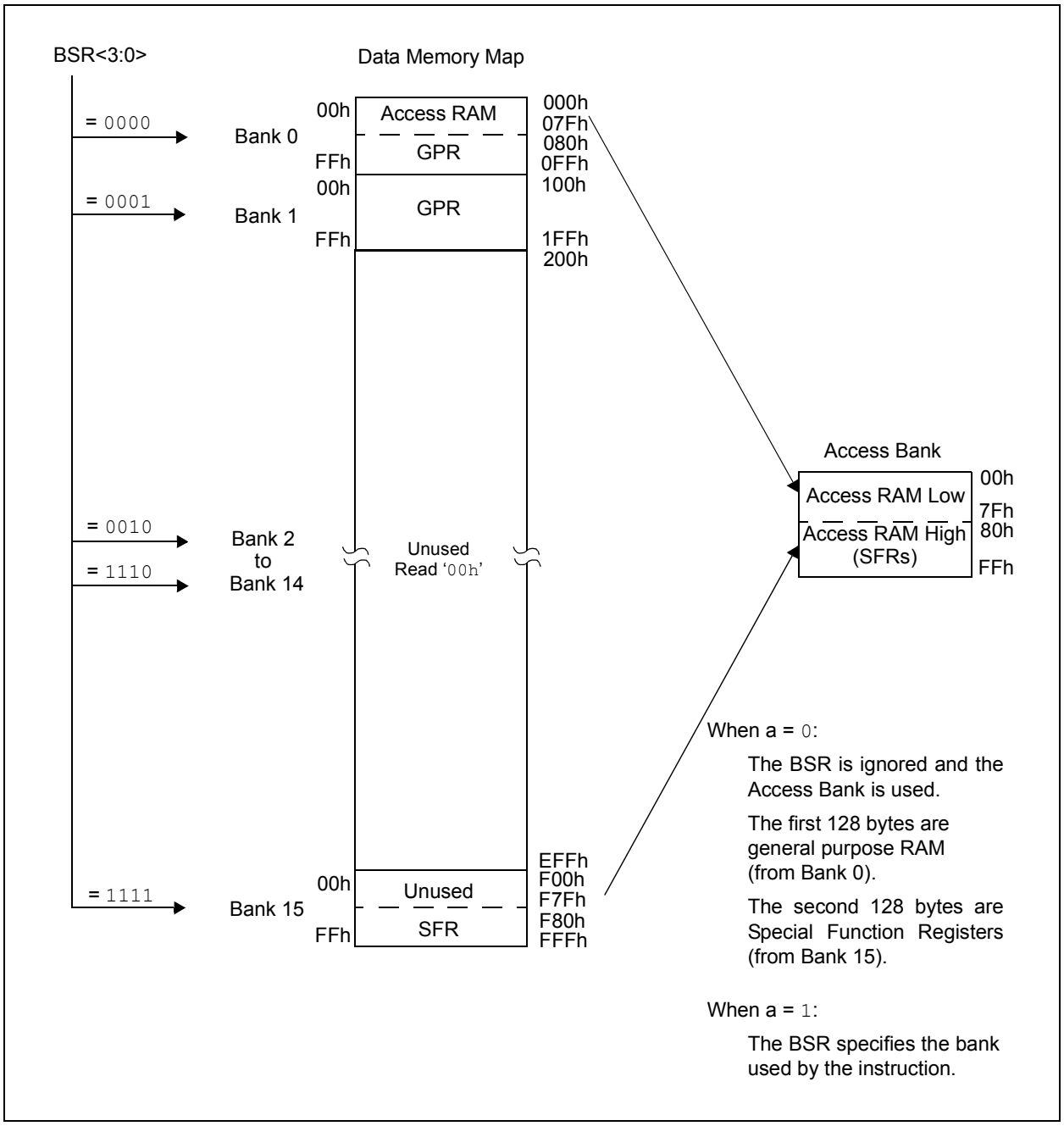

© 2007 Microchip Technology Inc.

5.9.2 SPECIAL FUNCTION REGISTERS

The Special Function Registers (SFRs) are registers used by the CPU and peripheral modules for controlling the desired operation of the device. These registers are implemented as static RAM. A list of these registers is given in Table 5-1 and Table 5-2.

The SFRs can be classified into two sets: those associated with the "core" function and those related to the peripheral functions. Those registers related to the "core" are described in this section, while those related to the operation of the peripheral features are described in the section of that peripheral feature.

The SFRs are typically distributed among the peripherals whose functions they control.

The unused SFR locations will be unimplemented and read as '0's.

TABLE 5-1: SPECIAL FUNCTION REGISTER MAP FOR PIC18F2X20/4X20 DEVICES

Address	Name	Address	Name	Address	Name	Address	Name
FFFh	TOSU	FDFh	INDF2(2)	FBFh	CCPR1H	F9Fh	IPR1
FFEh	TOSH	FDEh	POSTINC2(2)	FBEh	CCPR1L	F9Eh	PIR1
FFDh	TOSL	FDDh	POSTDEC2(2)	FBDh	CCP1CON	F9Dh	PIE1
FFCh	STKPTR	FDCh	PREINC2(2)	FBCh	CCPR2H	F9Ch	—
FFBh	PCLATU	FDBh	PLUSW2(2)	FBBh	CCPR2L	F9Bh	OSCTUNE
FFAh	PCLATH	FDAh	FSR2H	FBAh	CCP2CON	F9Ah	OSCTUN2
FF9h	PCL	FD9h	FSR2L	FB9h	—	F99h	—
FF8h	TBLPTRU	FD8h	STATUS	FB8h	—	F98h	—
FF7h	TBLPTRH	FD7h	TMR0H	FB7h	PWM1CON(1)	F97h	—
FF6h	TBLPTRL	FD6h	TMR0L	FB6h	ECCPAS(1)	F96h	TRISE(1)
FF5h	TABLAT	FD5h	T0CON	FB5h	CVRCON	F95h	TRISD(1)
FF4h	PRODH	FD4h	—	FB4h	CMCON	F94h	TRISC
FF3h	PRODL	FD3h	OSCCON	FB3h	TMR3H	F93h	TRISB
FF2h	INTCON	FD2h	LVDCON	FB2h	TMR3L	F92h	TRISA
FF1h	INTCON2	FD1h	WDTCON	FB1h	T3CON	F91h	—
FF0h	INTCON3	FD0h	RCON	FB0h	—	F90h	—
FEFh	INDF0(2)	FCFh	TMR1H	FAFh	SPBRG	F8Fh	—
FEEh	POSTINC0(2)	FCEh	TMR1L	FAEh	RCREG	F8Eh	—
FEDh	POSTDEC0(2)	FCDh	T1CON	FADh	TXREG	F8Dh	LATE(1)
FECh	PREINC0(2)	FCCh	TMR2	FACh	TXSTA	F8Ch	LATD(1)
FEBh	PLUSW0(2)	FCBh	PR2	FABh	RCSTA	F8Bh	LATC
FEAh	FSR0H	FCAh	T2CON	FAAh	—	F8Ah	LATB
FE9h	FSR0L	FC9h	SSPBUF	FA9h	EEADR	F89h	LATA
FE8h	WREG	FC8h	SSPADD	FA8h	EEDATA	F88h	—
FE7h	INDF1(2)	FC7h	SSPSTAT	FA7h	EECON2	F87h	—
FE6h	POSTINC1(2)	FC6h	SSPCON1	FA6h	EECON1	F86h	—
FE5h	POSTDEC1(2)	FC5h	SSPCON2	FA5h	—	F85h	—
FE4h	PREINC1(2)	FC4h	ADRESH	FA4h	—	F84h	PORTE(1)
FE3h	PLUSW1(2)	FC3h	ADRESL	FA3h	—	F83h	PORTD(1)
FE2h	FSR1H	FC2h	ADCON0	FA2h	IPR2	F82h	PORTC
FE1h	FSR1L	FC1h	ADCON1	FA1h	PIR2	F81h	PORTB
FE0h	BSR	FC0h	ADCON2	FA0h	PIE2	F80h	PORTA

Legend: — = Unimplemented registers, read as '0'.

Note 1: This register is not available on PIC18F2X20 devices.

2: This is not a physical register.

TABLE 5-2: REGISTER FILE SUMMARY (PIC18F2220/2320/4220/4320)

File Name	Bit 7	Bit 6	Bit 5	Bit 4	Bit 3	Bit 2	Bit 1	Bit 0	Value on POR, BOR	Details on page:
TOSU	—	—	—	Top-of-Stack Upper Byte (TOS<20:16>)					---0 0000	46, 54
TOSH	Top-of-Stack High Byte (TOS<15:8>)								0000 0000	46, 54
TOSL	Top-of-Stack Low Byte (TOS<7:0>)								0000 0000	46, 54
STKPTR	STKFUL	STKUNF	—	Return Stack Pointer					00-0 0000	46, 55
PCLATU	—	—	bit 21(3)	Holding Register for PC<20:16>					---0 0000	46, 56
PCLATH	Holding Register for PC<15:8>								0000 0000	46, 56
PCL	PC Low Byte (PC<7:0>)								0000 0000	46, 56
TBLPTRU	—	—	bit 21	Program Memory Table Pointer Upper Byte (TBLPTR<20:16>)					--00 0000	46, 74
TBLPTRH	Program Memory Table Pointer High Byte (TBLPTR<15:8>)								0000 0000	46, 74
TBLPTRL	Program Memory Table Pointer Low Byte (TBLPTR<7:0>)								0000 0000	46, 74
TABLAT	Program Memory Table Latch								0000 0000	46, 74
PRODH	Product Register High Byte								xxxx xxxx	46, 85
PRODL	Product Register Low Byte								xxxx xxxx	46, 85
INTCON	GIE/GIEH	PEIE/GIEL	TMR0IE	INT0IE	RBIE	TMR0IF	INT0IF	RBIF	0000 000x	46, 89
INTCON2	$\overline{\text{RBPU}}$	INTEDG0	INTEDG1	INTEDG2	—	TMR0IP	—	RBIP	1111 -1-1	46, 90
INTCON3	INT2IP	INT1IP	—	INT2IE	INT1IE	—	INT2IF	INT1IF	11-0 0-00	46, 91
INDF0	Uses contents of FSR0 to address data memory – value of FSR0 not changed (not a physical register)								n/a	46, 66
POSTINC0	Uses contents of FSR0 to address data memory – value of FSR0 post-incremented (not a physical register)								n/a	46, 66
POSTDEC0	Uses contents of FSR0 to address data memory – value of FSR0 post-decremented (not a physical register)								n/a	46, 66
PREINC0	Uses contents of FSR0 to address data memory – value of FSR0 pre-incremented (not a physical register)								n/a	46, 66
PLUSW0	Uses contents of FSR0 to address data memory – value of FSR0 offset by W (not a physical register)								n/a	46, 66
FSR0H	—	—	—	—	Indirect Data Memory Address Pointer 0 High				---- 0000	46, 66
FSR0L	Indirect Data Memory Address Pointer 0 Low Byte								xxxx xxxx	46, 66
WREG	Working Register								xxxx xxxx	46
INDF1	Uses contents of FSR1 to address data memory – value of FSR1 not changed (not a physical register)								n/a	46, 66
POSTINC1	Uses contents of FSR1 to address data memory – value of FSR1 post-incremented (not a physical register)								n/a	46, 66
POSTDEC1	Uses contents of FSR1 to address data memory – value of FSR1 post-decremented (not a physical register)								n/a	46, 66
PREINC1	Uses contents of FSR1 to address data memory – value of FSR1 pre-incremented (not a physical register)								n/a	46, 66
PLUSW1	Uses contents of FSR1 to address data memory – value of FSR1 offset by W (not a physical register)								n/a	46, 66
FSR1H	—	—	—	—	Indirect Data Memory Address Pointer 1 High				---- 0000	47, 66
FSR1L	Indirect Data Memory Address Pointer 1 Low Byte								xxxx xxxx	47, 66
BSR	—	—	—	—	Bank Select Register				---- 0000	47, 65
INDF2	Uses contents of FSR2 to address data memory – value of FSR2 not changed (not a physical register)								n/a	47, 66
POSTINC2	Uses contents of FSR2 to address data memory – value of FSR2 post-incremented (not a physical register)								n/a	47, 66
POSTDEC2	Uses contents of FSR2 to address data memory – value of FSR2 post-decremented (not a physical register)								n/a	47, 66
PREINC2	Uses contents of FSR2 to address data memory – value of FSR2 pre-incremented (not a physical register)								n/a	47, 66
PLUSW2	Uses contents of FSR2 to address data memory – value of FSR2 offset by W (not a physical register)								n/a	47, 66
FSR2H	—	—	—	—	Indirect Data Memory Address Pointer 2 High				---- 0000	47, 66
FSR2L	Indirect Data Memory Address Pointer 2 Low Byte								xxxx xxxx	47, 66
STATUS	—	—	—	N	OV	Z	DC	C	---x xxxx	47, 68
TMR0H	Timer0 Register High Byte								0000 0000	47, 119
TMR0L	Timer0 Register Low Byte								xxxx xxxx	47, 119
T0CON	TMR0ON	T08BIT	T0CS	T0SE	PSA	T0PS2	T0PS1	T0PS0	1111 1111	47, 117

Legend: x = unknown, u = unchanged, - = unimplemented, q = value depends on condition

Note 1: RA6 and associated bits are configured as port pins in RCIO, ECIO and INTIO2 (with port function on RA6) Oscillator mode only and read as '0' in all other oscillator modes.

2: RA7 and associated bits are configured as port pins in INTIO2 Oscillator mode only and read as '0' in all other modes.

3: Bit 21 of the PC is only available in Test mode and Serial Programming modes.

4: If PBADEN = 0, PORTB<4:0> are configured as digital inputs and read unknown and if PBADEN = 1, PORTB<4:0> are configured as analog inputs and read as '0' following a Reset.

5: These registers and/or bits are not implemented on the PIC18F2X20 devices and read as 0x00.

6: The RE3 port bit is available as an input only pin only in 40-pin devices when Master Clear functionality is disabled (CONFIG3H<7> = 0).

© 2007 Microchip Technology Inc.

TABLE 5-2: REGISTER FILE SUMMARY (PIC18F2220/2320/4220/4320) (CONTINUED)

File Name	Bit 7	Bit 6	Bit 5	Bit 4	Bit 3	Bit 2	Bit 1	Bit 0	Value on POR, BOR	Details on page:
OSCCON	IDLEN	IRCF2	IRCF1	IRCF0	OSTS	IOFS	SCS1	SCS0	0000 q000	27, 47
LVDCON	—	—	IRVST	LVDEN	LVDL3	LVDL2	LVDL1	LVDL0	--00 0101	47, 233
WDTCON	—	—	—	—	—	—	—	SWDTEN	--- ---0	47, 247
RCON	IPEN	—	—	$\overline{RI}$	$\overline{TO}$	$\overline{PD}$	$\overline{POR}$	$\overline{BOR}$	0--1 11q0	45, 69, 98
TMR1H	Timer1 Register High Byte								xxxx xxxx	47, 125
TMR1L	Timer1 Register Low Byte								xxxx xxxx	47, 125
T1CON	RD16	T1RUN	T1CKPS1	T1CKPS0	T1OSCEN	$\overline{T1SYNC}$	TMR1CS	TMR1ON	0000 0000	47, 121
TMR2	Timer2 Register								0000 0000	47, 127
PR2	Timer2 Period Register								1111 1111	47, 127
T2CON	—	TOUTPS3	TOUTPS2	TOUTPS1	TOUTPS0	TMR2ON	T2CKPS1	T2CKPS0	-000 0000	47, 127
SSPBUF	MSSP Receive Buffer/Transmit Register								xxxx xxxx	47, 156, 164
SSPADD	MSSP Address Register in I^2C™ Slave mode. MSSP Baud Rate Reload Register in I^2C Master mode.								0000 0000	47, 164
SSPSTAT	SMP	CKE	D/$\overline{A}$	P	S	R/$\overline{W}$	UA	BF	0000 0000	47, 156, 165
SSPCON1	WCOL	SSPOV	SSPEN	CKP	SSPM3	SSPM2	SSPM1	SSPM0	0000 0000	47, 157, 166
SSPCON2	GCEN	ACKSTAT	ACKDT	ACKEN	RCEN	PEN	RSEN	SEN	0000 0000	47, 167
ADRESH	A/D Result Register High Byte								xxxx xxxx	48, 220
ADRESL	A/D Result Register Low Byte								xxxx xxxx	48, 220
ADCON0	—	—	CHS3	CHS2	CHS1	CHS0	GO/$\overline{DONE}$	ADON	--00 0000	48, 211
ADCON1	—	—	VCFG1	VCFG0	PCFG3	PCFG2	PCFG1	PCFG0	--00 0qqq	48, 212
ADCON2	ADFM	—	ACQT2	ACQT1	ACQT0	ADCS2	ADCS1	ADCS0	0-00 0000	48, 213
CCPR1H	Capture/Compare/PWM Register 1 High Byte								xxxx xxxx	48, 134
CCPR1L	Capture/Compare/PWM Register 1 Low Byte								xxxx xxxx	48, 134
CCP1CON	P1M1(5)	P1M0(5)	DC1B1	DC1B0	CCP1M3	CCP1M2	CCP1M1	CCP1M0	0000 0000	48, 133, 141
CCPR2H	Capture/Compare/PWM Register 2 High Byte								xxxx xxxx	48, 134
CCPR2L	Capture/Compare/PWM Register 2 Low Byte								xxxx xxxx	48, 134
CCP2CON	—	—	DC2B1	DC2B0	CCP2M3	CCP2M2	CCP2M1	CCP2M0	--00 0000	48, 133
PWM1CON(5)	PRSEN	PDC6	PDC5	PDC4	PDC3	PDC2	PDC1	PDC0	0000 0000	48, 149
ECCPAS(5)	ECCPASE	ECCPAS2	ECCPAS1	ECCPAS0	PSSAC1	PSSAC0	PSSBD1	PSSBD0	0000 0000	48, 150
CVRCON	CVREN	CVROE	CVRR	—	CVR3	CVR2	CVR1	CVR0	000- 0000	48, 227
CMCON	C2OUT	C1OUT	C2INV	C1INV	CIS	CM2	CM1	CM0	0000 0111	48, 221
TMR3H	Timer3 Register High Byte								xxxx xxxx	48, 131
TMR3L	Timer3 Register Low Byte								xxxx xxxx	48, 131
T3CON	RD16	T3CCP2	T3CKPS1	T3CKPS0	T3CCP1	$\overline{T3SYNC}$	TMR3CS	TMR3ON	0000 0000	48, 129
SPBRG	USART Baud Rate Generator								0000 0000	48, 198
RCREG	USART Receive Register								0000 0000	48, 204, 203
TXREG	USART Transmit Register								0000 0000	48, 202, 203
TXSTA	CSRC	TX9	TXEN	SYNC	—	BRGH	TRMT	TX9D	0000 -010	48, 196
RCSTA	SPEN	RX9	SREN	CREN	ADDEN	FERR	OERR	RX9D	0000 000x	48, 197

Legend: x = unknown, u = unchanged, - = unimplemented, q = value depends on condition

Note 1: RA6 and associated bits are configured as port pins in RCIO, ECIO and INTIO2 (with port function on RA6) Oscillator mode only and read as '0' in all other oscillator modes.

2: RA7 and associated bits are configured as port pins in INTIO2 Oscillator mode only and read as '0' in all other modes.

3: Bit 21 of the PC is only available in Test mode and Serial Programming modes.

4: If PBADEN = 0, PORTB<4:0> are configured as digital inputs and read unknown and if PBADEN = 1, PORTB<4:0> are configured as analog inputs and read as '0' following a Reset.

5: These registers and/or bits are not implemented on the PIC18F2X20 devices and read as 0x00.

6: The RE3 port bit is available as an input only pin only in 40-pin devices when Master Clear functionality is disabled (CONFIG3H<7> = 0).

TABLE 5-2: REGISTER FILE SUMMARY (PIC18F2220/2320/4220/4320) (CONTINUED)

File Name	Bit 7	Bit 6	Bit 5	Bit 4	Bit 3	Bit 2	Bit 1	Bit 0	Value on POR, BOR	Details on page:
EEADR	EEPROM Address Register								0000 0000	48, 81
EEDATA	EEPROM Data Register								0000 0000	48, 84
EECON2	EEPROM Control Register 2 (not a physical register)								0000 0000	48, 72, 81
EECON1	EEPGD	CFGS	—	FREE	WRERR	WREN	WR	RD	xx-0 x000	48, 73, 82
IPR2	OSCFIP	CMIP	—	EEIP	BCLIP	LVDIP	TMR3IP	CCP2IP	11-1 1111	49, 97
PIR2	OSCFIF	CMIF	—	EEIF	BCLIF	LVDIF	TMR3IF	CCP2IF	00-0 0000	49, 93
PIE2	OSCFIE	CMIE	—	EEIE	BCLIE	LVDIE	TMR3IE	CCP2IE	00-0 0000	49, 95
IPR1	PSPIP(5)	ADIP	RCIP	TXIP	SSPIP	CCP1IP	TMR2IP	TMR1IP	1111 1111	49, 96
PIR1	PSPIF(5)	ADIF	RCIF	TXIF	SSPIF	CCP1IF	TMR2IF	TMR1IF	0000 0000	49, 92
PIE1	PSPIE(5)	ADIE	RCIE	TXIE	SSPIE	CCP1IE	TMR2IE	TMR1IE	0000 0000	49, 94
OSCTUNE	—	—	TUN5	TUN4	TUN3	TUN2	TUN1	TUN0	--00 0000	23, 49
TRISE(5)	IBF	OBF	IBOV	PSPMODE	—	Data Direction bits for PORTE			0000 -111	49, 112
TRISD(5)	Data Direction Control Register for PORTD								1111 1111	49, 110
TRISC	Data Direction Control Register for PORTC								1111 1111	49, 108
TRISB	Data Direction Control Register for PORTB								1111 1111	49, 106
TRISA	TRISA7(2)	TRISA6(1)	Data Direction Control Register for PORTA						1111 1111	49, 103
LATE(5)	—	—	—	—	—	Read/Write PORTE Data Latch			---- -xxx	49, 113
LATD(5)	Read/Write PORTD Data Latch								xxxx xxxx	49, 110
LATC	Read/Write PORTC Data Latch								xxxx xxxx	49, 108
LATB	Read/Write PORTB Data Latch								xxxx xxxx	49, 106
LATA	LATA<7>(2)	LATA<6>(1)	Read/Write PORTA Data Latch						xxxx xxxx	49, 103
PORTE(5)	—	—	—	—	RE3(6)	Read PORTE pins, Write PORTE Data Latch			---- qxxx	49, 113
PORTD(5)	Read PORTD pins, Write PORTD Data Latch								xxxx xxxx	49, 110
PORTC	Read PORTC pins, Write PORTC Data Latch								xxxx xxxx	49, 108
PORTB	Read PORTB pins, Write PORTB Data Latch(4)								xxxx xxxx	49, 106
PORTA	RA7(2)	RA6(1)	Read PORTA pins, Write PORTA Data Latch						xx0x 0000	49, 103

Legend: x = unknown, u = unchanged, - = unimplemented, q = value depends on condition

Note 1: RA6 and associated bits are configured as port pins in RCIO, ECIO and INTIO2 (with port function on RA6) Oscillator mode only and read as '0' in all other oscillator modes.

2: RA7 and associated bits are configured as port pins in INTIO2 Oscillator mode only and read as '0' in all other modes.

3: Bit 21 of the PC is only available in Test mode and Serial Programming modes.

4: If PBADEN = 0, PORTB<4:0> are configured as digital inputs and read unknown and if PBADEN = 1, PORTB<4:0> are configured as analog inputs and read as '0' following a Reset.

5: These registers and/or bits are not implemented on the PIC18F2X20 devices and read as 0x00.

6: The RE3 port bit is available as an input only pin only in 40-pin devices when Master Clear functionality is disabled (CONFIG3H<7> = 0).

© 2007 Microchip Technology Inc.

5.10 Access Bank

The Access Bank is an architectural enhancement which is very useful for C compiler code optimization. The techniques used by the C compiler may also be useful for programs written in assembly.

This data memory region can be used for:

- Intermediate computational values
- Local variables of subroutines
- Faster context saving/switching of variables
- Common variables
- Faster evaluation/control of SFRs (no banking)

The Access Bank is comprised of the last 128 bytes in Bank 15 (SFRs) and the first 128 bytes in Bank 0. These two sections will be referred to as Access RAM High and Access RAM Low, respectively. Figure 5-6 indicates the Access RAM areas.

A bit in the instruction word specifies if the operation is to occur in the bank specified by the BSR register or in the Access Bank. This bit is denoted as the 'a' bit (for access bit).

When forced in the Access Bank (a = 0), the last address in Access RAM Low is followed by the first address in Access RAM High. Access RAM High maps the Special Function Registers, so these registers can be accessed without any software overhead. This is useful for testing status flags and modifying control bits.

5.11 Bank Select Register (BSR)

The need for a large general purpose memory space dictates a RAM banking scheme. The data memory is partitioned into as many as sixteen banks. When using direct addressing, the BSR should be configured for the desired bank.

BSR<3:0> holds the upper 4 bits of the 12-bit RAM address. The BSR<7:4> bits will always read '0's and writes will have no effect (see Figure 5-7).

A MOVLB instruction has been provided in the instruction set to assist in selecting banks.

If the currently selected bank is not implemented, any read will return all '0's and all writes are ignored. The STATUS register bits will be set/cleared as appropriate for the instruction performed.

Each Bank extends up to FFh (256 bytes). All data memory is implemented as static RAM.

A MOVFF instruction ignores the BSR since the 12-bit addresses are embedded into the instruction word.

Section 5.12 "Indirect Addressing, INDF and FSR Registers" provides a description of indirect addressing which allows linear addressing of the entire RAM space.

FIGURE 5-7: DIRECT ADDRESSING

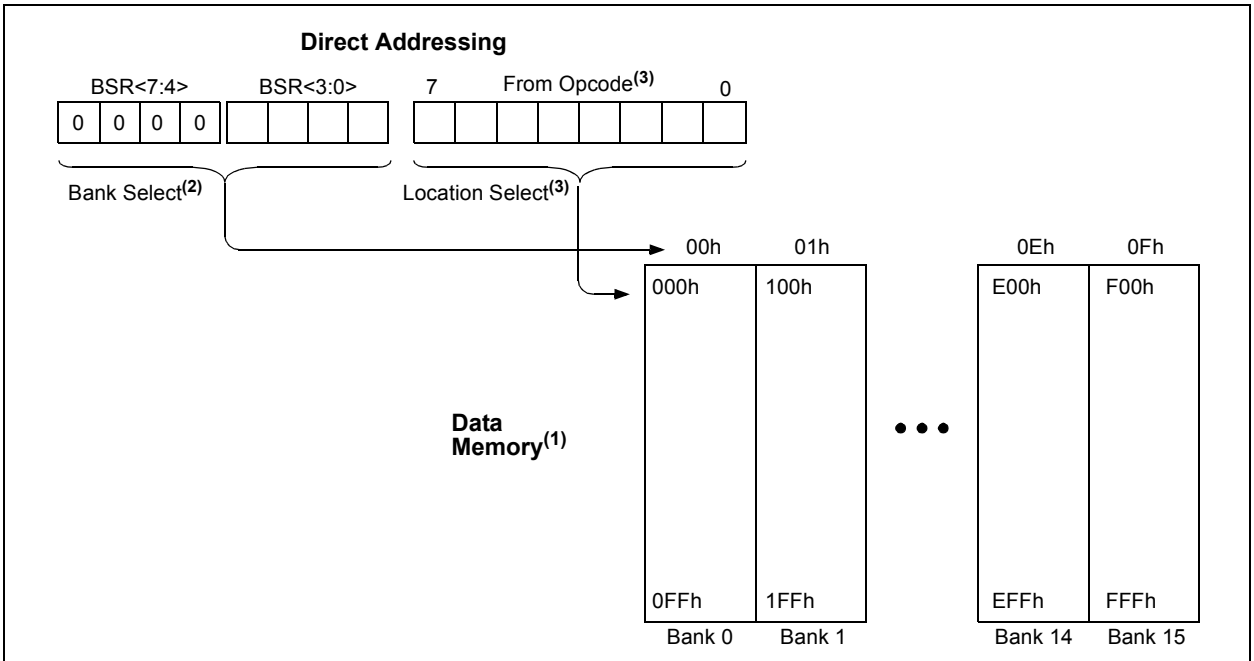

Note 1: For register file map detail, see Table 5-1.
2: The access bit of the instruction can be used to force an override of the selected bank (BSR<3:0>) to the registers of the Access Bank.
3: The MOVFF instruction embeds the entire 12-bit address in the instruction.

5.12 Indirect Addressing, INDF and FSR Registers

Indirect Addressing is a mode of addressing data memory, where the data memory address in the instruction is not fixed. An FSR register is used as a pointer to the data memory location that is to be read or written. Since this pointer is in RAM, the contents can be modified by the program. This can be useful for data tables in the data memory and for software stacks. Figure 5-8 shows how the fetched instruction is modified prior to being executed.

Indirect Addressing is possible by using one of the INDF registers. Any instruction using the INDF register actually accesses the register pointed to by the File Select Register, FSR. Reading the INDF register itself, indirectly (FSR = 0), will read 00h. Writing to the INDF register indirectly, results in a no operation. The FSR register contains a 12-bit address which is shown in Figure 5-9.

The INDFn register is not a physical register. Addressing INDFn actually addresses the register whose address is contained in the FSRn register (FSRn is a pointer); this is indirect addressing.

Example 5-5 shows a simple use of indirect addressing to clear the RAM in Bank 1 (locations 100h-1FFh) in a minimum number of instructions.

EXAMPLE 5-5: HOW TO CLEAR RAM (BANK 1) USING INDIRECT ADDRESSING

```
          LFSR   FSR0,0x100 ;
NEXT      CLRF   POSTINC0   ; Clear INDF
                            ; register then
                            ; inc pointer
          BTFSS  FSR0H, 1   ; All done with
                            ; Bank1?
          GOTO   NEXT       ; NO, clear next
CONTINUE                    ; YES, continue
```

There are three Indirect Addressing registers. To address the entire data memory space (4096 bytes), these registers are 12 bits wide. To store the 12 bits of addressing information, two 8-bit registers are required:

1. FSR0: composed of FSR0H:FSR0L
2. FSR1: composed of FSR1H:FSR1L
3. FSR2: composed of FSR2H:FSR2L

In addition, there are registers INDF0, INDF1 and INDF2, which are not physically implemented. Reading or writing to these registers activates Indirect Addressing with the value in the corresponding FSR register being the address of the data. If an instruction writes a value to INDF0, the value will be written to the address pointed to by FSR0H:FSR0L. A read from INDF1 reads the data from the address pointed to by FSR1H:FSR1L. INDFn can be used in code anywhere an operand can be used.

If INDF0, INDF1 or INDF2 are read indirectly via an FSR, all '0's are read (zero bit is set). Similarly, if INDF0, INDF1 or INDF2 are written to indirectly, the operation will be equivalent to a NOP instruction and the Status bits are not affected.

5.12.1 INDIRECT ADDRESSING OPERATION

Each FSR register has an INDF register associated with it, plus four additional register addresses. Performing an operation using one of these five registers determines how the FSR will be modified during indirect addressing.

When data access is performed using one of the five INDFn locations, the address selected will configure the FSRn register to:

- Do nothing to FSRn after an indirect access (no change) – INDFn
- Auto-decrement FSRn after an indirect access (post-decrement) – POSTDECn
- Auto-increment FSRn after an indirect access (post-increment) – POSTINCn
- Auto-increment FSRn before an indirect access (pre-increment) – PREINCn
- Use the value in the WREG register as an offset to FSRn. Do not modify the value of the WREG or the FSRn register after an indirect access (no change) – PLUSWn

When using the auto-increment or auto-decrement features, the effect on the FSR is not reflected in the STATUS register. For example, if the indirect address causes the FSR to equal '0', the Z bit will not be set.

Auto-incrementing or auto-decrementing an FSR affects all 12 bits. That is, when FSRnL overflows from an increment, FSRnH will be incremented automatically.

Adding these features allows the FSRn to be used as a Stack Pointer, in addition to its use for table operations in data memory.

Each FSR has an address associated with it that performs an indexed indirect access. When a data access to this INDFn location (PLUSWn) occurs, the FSRn is configured to add the signed value in the WREG register and the value in FSR to form the address before an indirect access. The FSR value is not changed. The WREG offset range is -128 to +127.

If an FSR register contains a value that points to one of the INDFn, an indirect read will read 00h (zero bit is set) while an indirect write will be equivalent to a NOP (Status bits are not affected).

If an Indirect Addressing write is performed when the target address is an FSRnH or FSRnL register, the data is written to the FSR register but no pre- or post-increment/decrement is performed.

© 2007 Microchip Technology Inc.

FIGURE 5-8: INDIRECT ADDRESSING OPERATION

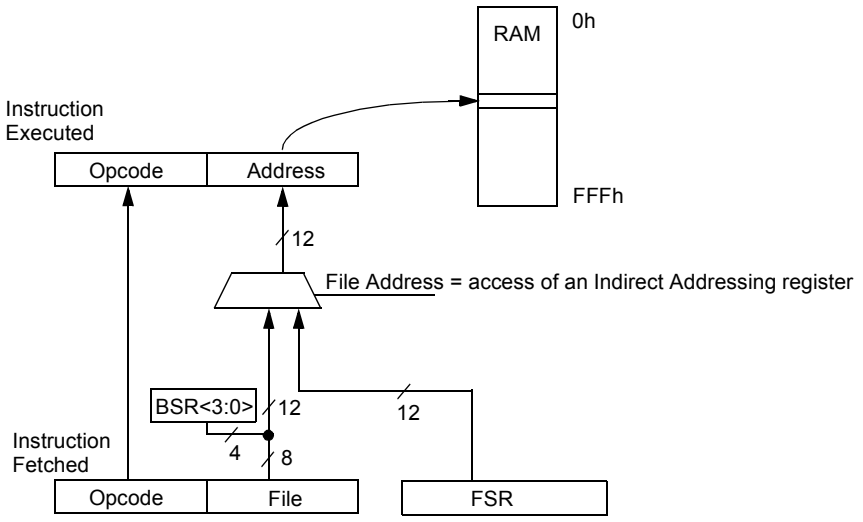

FIGURE 5-9: INDIRECT ADDRESSING

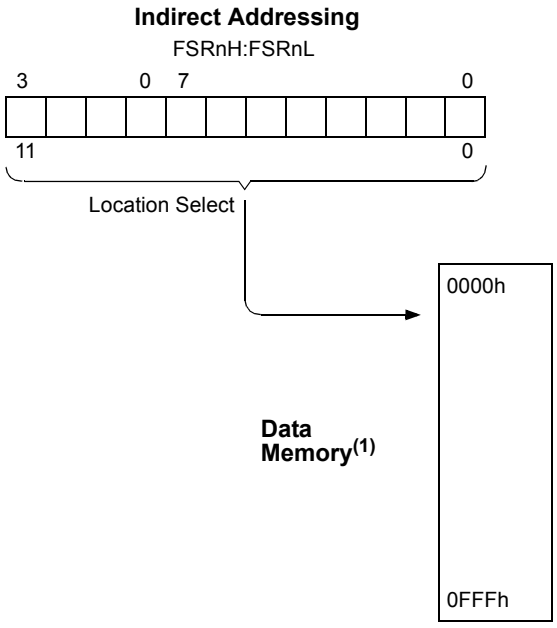

Note 1: For register file map detail, see Table 5-1.

5.13 STATUS Register

The STATUS register, shown in Register 5-2, contains the arithmetic status of the ALU. The STATUS register can be the operand for any instruction as with any other register. If the STATUS register is the destination for an instruction that affects the Z, DC, C, OV or N bits, then the write to these five bits is disabled. These bits are set or cleared according to the device logic. Therefore, the result of an instruction with the STATUS register as destination may be different than intended.

For example, `CLRF STATUS` will clear the upper three bits and set the Z bit. This leaves the STATUS register as `000u u1uu` (where `u` = unchanged).

It is recommended, therefore, that only `BCF`, `BSF`, `SWAPF`, `MOVFF` and `MOVWF` instructions are used to alter the STATUS register, because these instructions do not affect the Z, C, DC, OV or N bits in the STATUS register. For other instructions not affecting any Status bits (see Table 24-2).

Note: The C and DC bits operate as a $\overline{\text{borrow}}$ and digit $\overline{\text{borrow}}$ bit respectively, in subtraction.

REGISTER 5-2: STATUS REGISTER

U-0	U-0	U-0	R/W-x	R/W-x	R/W-x	R/W-x	R/W-x
—	—	—	N	OV	Z	DC(1)	C(2)
bit 7							bit 0

Legend:			
R = Readable bit	W = Writable bit	U = Unimplemented bit, read as '0'	
-n = Value at POR	'1' = Bit is set	'0' = Bit is cleared	x = Bit is unknown

bit 7-5 **Unimplemented:** Read as '0'

bit 4 **N:** Negative bit
This bit is used for signed arithmetic (2's complement). It indicates whether the result was negative (ALU MSB = 1).
1 = Result was negative
0 = Result was positive

bit 3 **OV:** Overflow bit
This bit is used for signed arithmetic (2's complement). It indicates an overflow of the 7-bit magnitude which causes the sign bit (bit 7 of the result) to change state.
1 = Overflow occurred for signed arithmetic (in this arithmetic operation)
0 = No overflow occurred

bit 2 **Z:** Zero bit
1 = The result of an arithmetic or logic operation is zero
0 = The result of an arithmetic or logic operation is not zero

bit 1 **DC:** Digit Carry/$\overline{\text{Borrow}}$ bit(1)
For `ADDWF`, `ADDLW`, `SUBLW` and `SUBWF` instructions:
1 = A carry-out from the 4th low-order bit of the result occurred
0 = No carry-out from the 4th low-order bit of the result

bit 0 **C:** Carry/$\overline{\text{Borrow}}$ bit(2)
For `ADDWF`, `ADDLW`, `SUBLW` and `SUBWF` instructions:
1 = A carry-out from the Most Significant bit of the result occurred
0 = No carry-out from the Most Significant bit of the result occurred

Note 1: For $\overline{\text{Borrow}}$, the polarity is reversed. A subtraction is executed by adding the 2's complement of the second operand. For rotate (`RRF`, `RLF`) instructions, this bit is loaded with either bit 4 or bit 3 of the source register.

2: For $\overline{\text{Borrow}}$, the polarity is reversed. A subtraction is executed by adding the 2's complement of the second operand. For rotate (`RRF`, `RLF`) instructions, this bit is loaded with either the high or low-order bit of the source register.

© 2007 Microchip Technology Inc.

5.14 RCON Register

The Reset Control (RCON) register contains flag bits that allow differentiation between the sources of a device Reset. These flags include the $\overline{TO}$, $\overline{PD}$, $\overline{POR}$, $\overline{BOR}$ and $\overline{RI}$ bits. This register is readable and writable.

Note 1: If the BOREN Configuration bit is set (Brown-out Reset enabled), the $\overline{BOR}$ bit is '1' on a Power-on Reset. After a Brown-out Reset has occurred, the $\overline{BOR}$ bit will be cleared and must be set by firmware to indicate the occurrence of the next Brown-out Reset.

2: It is recommended that the $\overline{POR}$ bit be set after a Power-on Reset has been detected so that subsequent Power-on Resets may be detected.

REGISTER 5-3: RCON: RESET CONTROL REGISTER

R/W-0	U-0	U-0	R/W-1	R-1	R-1	R/W-0	R/W-0
IPEN	—	—	$\overline{RI}$	$\overline{TO}$	$\overline{PD}$	$\overline{POR}$	$\overline{BOR}$
bit 7							bit 0

Legend:			
R = Readable bit	W = Writable bit	U = Unimplemented bit, read as '0'	
-n = Value at POR	'1' = Bit is set	'0' = Bit is cleared	x = Bit is unknown

bit 7 **IPEN:** Interrupt Priority Enable bit
- 1 = Enable priority levels on interrupts
- 0 = Disable priority levels on interrupts (PIC16CXXX Compatibility mode)

bit 6-5 **Unimplemented:** Read as '0'

bit 4 **$\overline{RI}$:** RESET Instruction Flag bit
- 1 = The RESET instruction was not executed (set by firmware only)
- 0 = The RESET instruction was executed causing a device Reset (must be set in software after a Brown-out Reset occurs)

bit 3 **$\overline{TO}$:** Watchdog Time-out Flag bit
- 1 = Set by power-up, CLRWDT instruction or SLEEP instruction
- 0 = A WDT time-out occurred

bit 2 **$\overline{PD}$:** Power-down Detection Flag bit
- 1 = Set by power-up or by the CLRWDT instruction
- 0 = Cleared by execution of the SLEEP instruction

bit 1 **$\overline{POR}$:** Power-on Reset Status bit
- 1 = A Power-on Reset has not occurred (set by firmware only)
- 0 = A Power-on Reset occurred (must be set in software after a Power-on Reset occurs)

bit 0 **$\overline{BOR}$:** Brown-out Reset Status bit
- 1 = A Brown-out Reset has not occurred (set by firmware only)
- 0 = A Brown-out Reset occurred (must be set in software after a Brown-out Reset occurs)

NOTES:

© 2007 Microchip Technology Inc.

6.0 FLASH PROGRAM MEMORY

The Flash program memory is readable, writable and erasable during normal operation over the entire VDD range.

A read from program memory is executed on one byte at a time. A write to program memory is executed on blocks of 8 bytes at a time. Program memory is erased in blocks of 64 bytes at a time. A bulk erase operation may not be issued from user code.

While writing or erasing program memory, instruction fetches cease until the operation is complete. The program memory cannot be accessed during the write or erase, therefore, code cannot execute. An internal programming timer terminates program memory writes and erases.

A value written to program memory does not need to be a valid instruction. Executing a program memory location that forms an invalid instruction results in a NOP.

6.1 Table Reads and Table Writes

In order to read and write program memory, there are two operations that allow the processor to move bytes between the program memory space and the data RAM:

- Table Read (TBLRD)
- Table Write (TBLWT)

The program memory space is 16 bits wide while the data RAM space is 8 bits wide. Table reads and table writes move data between these two memory spaces through an 8-bit register (TABLAT).

Table read operations retrieve data from program memory and place it into TABLAT in the data RAM space. Figure 6-1 shows the operation of a table read with program memory and data RAM.

Table write operations store data from TABLAT in the data memory space into holding registers in program memory. The procedure to write the contents of the holding registers into program memory is detailed in **Section 6.5 "Writing to Flash Program Memory"**. Figure 6-2 shows the operation of a table write with program memory and data RAM.

Table operations work with byte entities. A table block containing data, rather than program instructions, is not required to be word aligned. Therefore, a table block can start and end at any byte address. If a table write is being used to write executable code into program memory, program instructions will need to be word-aligned (TBLPTRL<0> = 0).

The EEPROM on-chip timer controls the write and erase times. The write and erase voltages are generated by an on-chip charge pump rated to operate over the voltage range of the device for byte or word operations.

FIGURE 6-1: TABLE READ OPERATION

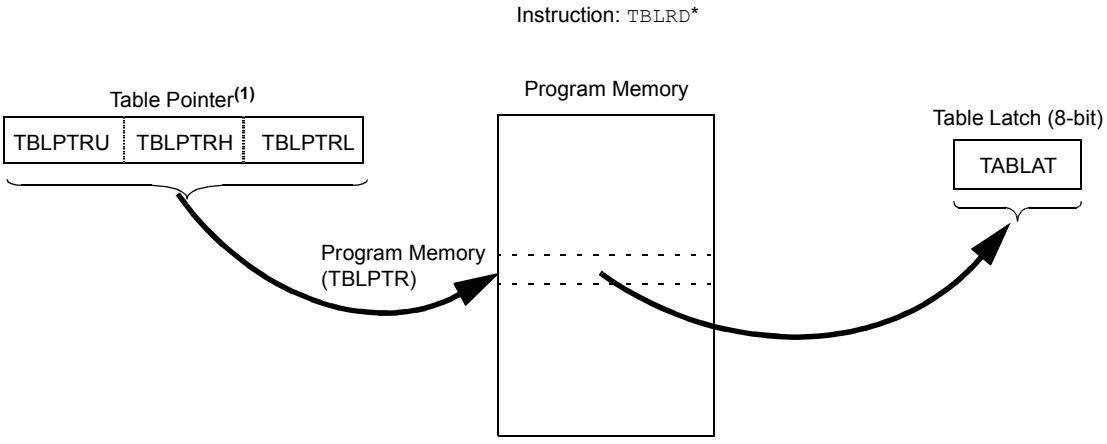

Note 1: Table Pointer points to a byte in program memory.

FIGURE 6-2: TABLE WRITE OPERATION

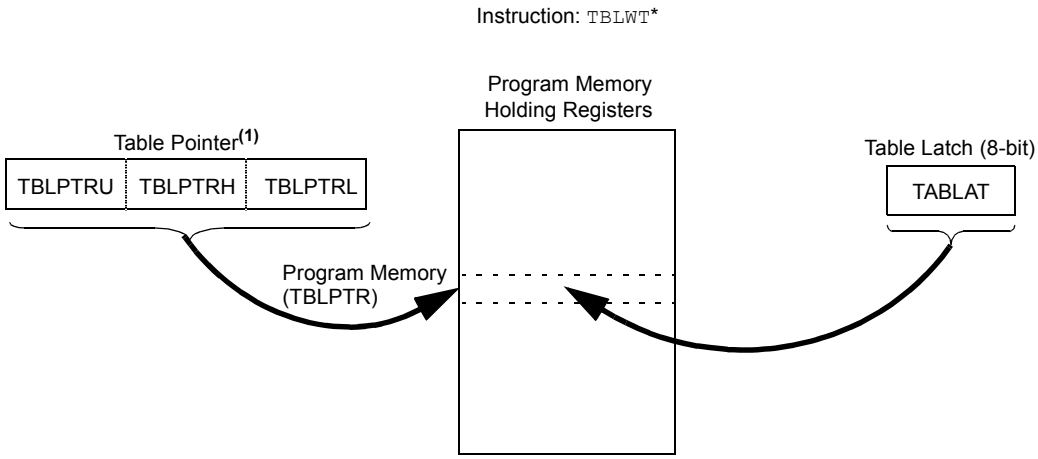

Note 1: Table Pointer actually points to one of eight holding registers, the address of which is determined by TBLPTRL<2:0>. The process for physically writing data to the program memory array is discussed in **Section 6.5 "Writing to Flash Program Memory"**.

6.2 Control Registers

Several control registers are used in conjunction with the TBLRD and TBLWT instructions. These include the:

- EECON1 register
- EECON2 register
- TABLAT register
- TBLPTR registers

6.2.1 EECON1 AND EECON2 REGISTERS

EECON1 is the control register for memory accesses.

EECON2 is not a physical register. Reading EECON2 will read all '0's. The EECON2 register is used exclusively in the memory write and erase sequences.

Control bit, EEPGD, determines if the access will be to program or data EEPROM memory. When clear, operations will access the data EEPROM memory. When set, program memory is accessed.

Control bit, CFGS, determines if the access will be to the Configuration registers or to program memory/data EEPROM memory. When set, subsequent operations access Configuration registers. When CFGS is clear, the EEPGD bit selects either program Flash or data EEPROM memory.

The FREE bit controls program memory erase operations. When the FREE bit is set, the erase operation is initiated on the next WR command. When FREE is clear, only writes are enabled.

The WREN bit enables and disables erase and write operations. When set, erase and write operations are allowed. When clear, erase and write operations are disabled – the WR bit cannot be set while the WREN bit is clear. This process helps to prevent accidental writes to memory due to errant (unexpected) code execution.

Firmware should keep the WREN bit clear at all times except when starting erase or write operations. Once firmware has set the WR bit, the WREN bit may be cleared. Clearing the WREN bit will not affect the operation in progress.

The WRERR bit is set when a write operation is interrupted by a Reset. In these situations, the user can check the WRERR bit and rewrite the location. It will be necessary to reload the data and address registers (EEDATA and EEADR) as these registers have cleared as a result of the Reset.

Control bits, RD and WR, start read and erase/write operations, respectively. These bits are set by firmware and cleared by hardware at the completion of the operation.

The RD bit cannot be set when accessing program memory (EEPGD = 1). Program memory is read using table read instructions. See **Section 6.3 "Reading the Flash Program Memory"** regarding table reads.

Note:	Interrupt flag bit, EEIF in the PIR2 register, is set when the write is complete. It must be cleared in software.

© 2007 Microchip Technology Inc.

REGISTER 6-1: EECON1: DATA EEPROM CONTROL REGISTER 1

R/W-x	R/W-x	U-0	R/W-0	R/W-x	R/W-0	R/S-0	R/S-0
EEPGD	CFGS	—	FREE	WRERR(1)	WREN	WR	RD
bit 7							bit 0

Legend:	S = Settable bit		
R = Readable bit	W = Writable bit	U = Unimplemented bit, read as '0'	
-n = Value at POR	'1' = Bit is set	'0' = Bit is cleared	x = Bit is unknown

bit 7 **EEPGD:** Flash Program or Data EEPROM Memory Select bit
1 = Access Flash program memory
0 = Access data EEPROM memory

bit 6 **CFGS:** Flash Program/Data EEPROM or Configuration Select bit
1 = Access Configuration registers
0 = Access Flash program or data EEPROM memory

bit 5 **Unimplemented:** Read as '0'

bit 4 **FREE:** Flash Row Erase Enable bit
1 = Erase the program memory row addressed by TBLPTR on the next WR command (cleared by completion of erase operation)
0 = Perform write-only

bit 3 **WRERR:** EEPROM Error Flag bit(1)
1 = A write operation was prematurely terminated (any Reset during self-timed programming)
0 = The write operation completed normally

bit 2 **WREN:** Write Enable bit
1 = Allows write cycles to Flash program/data EEPROM
0 = Inhibits write cycles to Flash program/data EEPROM

bit 1 **WR:** Write Control bit
1 = Initiates a data EEPROM erase/write cycle or a program memory erase cycle or write cycle (The operation is self-timed and the bit is cleared by hardware once write is complete. The WR bit can only be set (not cleared) in software.)
0 = Write cycle completed

bit 0 **RD:** Read Control bit
1 = Initiates a memory read (Read takes one cycle. RD is cleared in hardware. The RD bit can only be set (not cleared) in software. RD bit cannot be set when EEPGD = 1.)
0 = Read completed

Note 1: When a WRERR occurs, the EEPGD and CFGS bits are not cleared. This allows tracing of the error condition.

6.2.2 TABLAT – TABLE LATCH REGISTER

The Table Latch (TABLAT) is an 8-bit register mapped into the SFR space. The Table Latch register is used to hold 8-bit data during data transfers between program memory and data RAM.

6.2.3 TBLPTR – TABLE POINTER REGISTER

The Table Pointer (TBLPTR) register addresses a byte within the program memory. The TBLPTR is comprised of three SFR registers: Table Pointer Upper Byte, Table Pointer High Byte and Table Pointer Low Byte (TBLPTRU:TBLPTRH:TBLPTRL). These three registers join to form a 22-bit wide pointer. The low-order 21 bits allow the device to address up to 2 Mbytes of program memory space. Setting the 22nd bit allows access to the Device ID, the user ID and the Configuration bits.

The Table Pointer, TBLPTR, is used by the `TBLRD` and `TBLWT` instructions. These instructions can update the TBLPTR in one of four ways based on the table operation. These operations are shown in Table 6-1. These operations on the TBLPTR only affect the low-order 21 bits.

6.2.4 TABLE POINTER BOUNDARIES

TBLPTR is used in reads, writes and erases of the Flash program memory.

When a `TBLRD` is executed, all 22 bits of the Table Pointer determine which byte is read from program or configuration memory into TABLAT.

When a `TBLWT` is executed, the three LSbs of the Table Pointer (TBLPTR<2:0>) determine which of the eight program memory holding registers is written to. When the timed write to program memory (long write) begins, the 19 MSbs of the TBLPTR (TBLPTR<21:3>) will determine which program memory block of 8 bytes is written to (TBLPTR<2:0> are ignored). For more detail, see **Section 6.5 “Writing to Flash Program Memory”**.

When an erase of program memory is executed, the 16 MSbs of the Table Pointer (TBLPTR<21:6>) point to the 64-byte block that will be erased. The Least Significant bits (TBLPTR<5:0>) are ignored.

Figure 6-3 describes the relevant boundaries of TBLPTR based on Flash program memory operations.

TABLE 6-1: TABLE POINTER OPERATIONS WITH `TBLRD` AND `TBLWT` INSTRUCTIONS

Example	Operation on Table Pointer
`TBLRD*` `TBLWT*`	TBLPTR is not modified
`TBLRD*+` `TBLWT*+`	TBLPTR is incremented after the read/write
`TBLRD*-` `TBLWT*-`	TBLPTR is decremented after the read/write
`TBLRD+*` `TBLWT+*`	TBLPTR is incremented before the read/write

FIGURE 6-3: TABLE POINTER BOUNDARIES BASED ON OPERATION

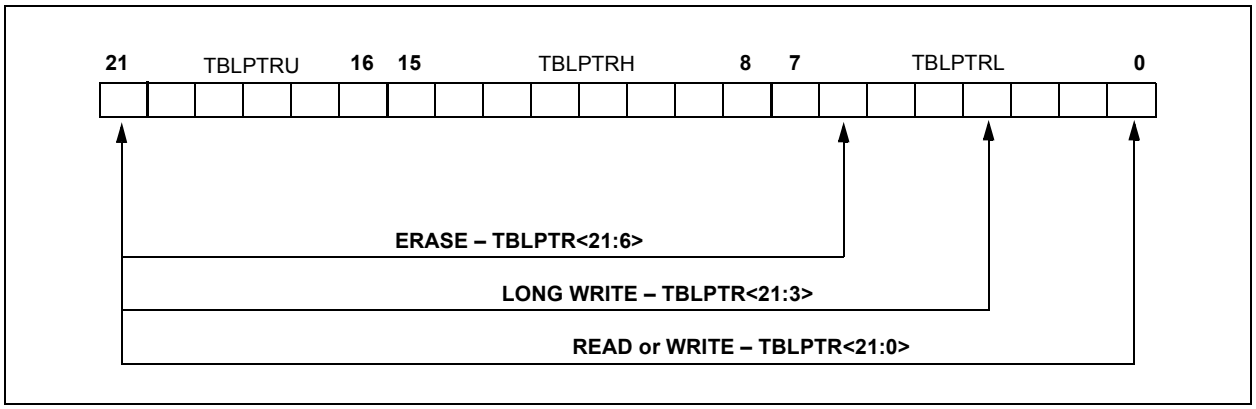

© 2007 Microchip Technology Inc.

6.3 Reading the Flash Program Memory

The TBLRD instruction is used to retrieve data from program memory and place it into data RAM. Table reads from program memory are performed one byte at a time.

TBLPTR points to a byte address in program space. Executing a TBLRD instruction places the byte pointed to into TABLAT. In addition, TBLPTR can be modified automatically for the next table read operation.

The internal program memory is typically organized by words. The Least Significant bit of the address selects between the high and low bytes of the word. Figure 6-4 shows the interface between the internal program memory and the TABLAT.

FIGURE 6-4: READS FROM FLASH PROGRAM MEMORY

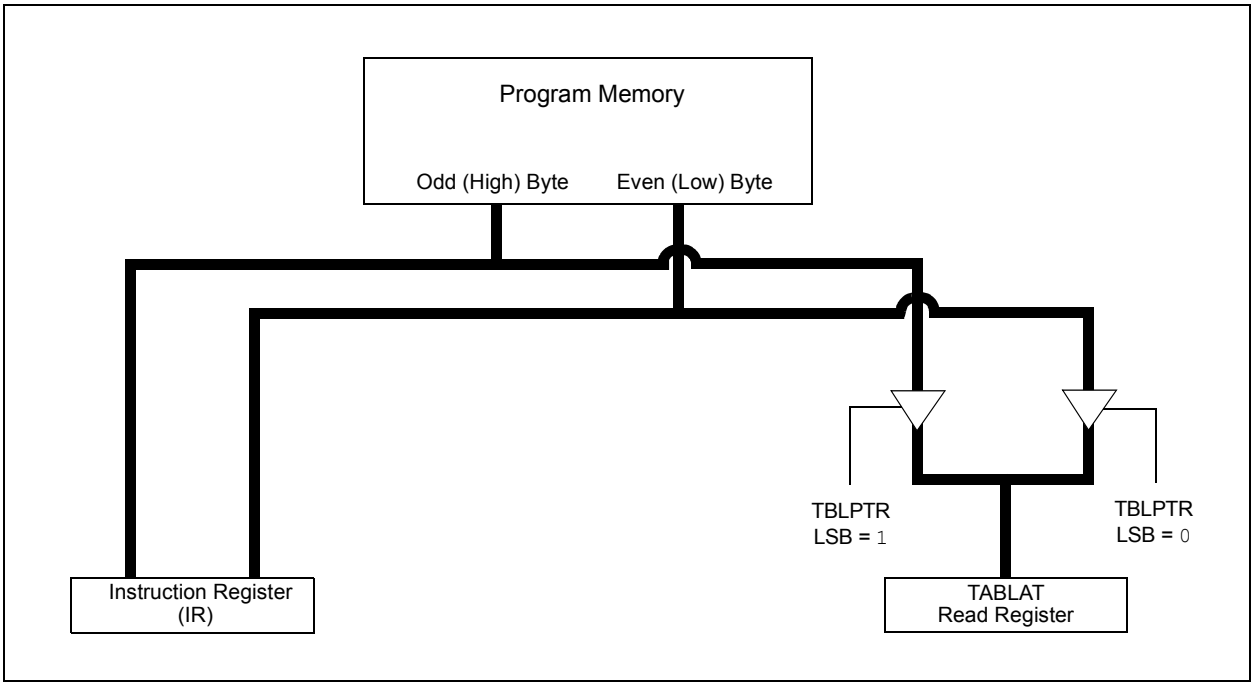

EXAMPLE 6-1: READING A FLASH PROGRAM MEMORY WORD

```
            MOVLW    CODE_ADDR_UPPER          ; Load TBLPTR with the base
            MOVWF    TBLPTRU                  ; address of the word
            MOVLW    CODE_ADDR_HIGH
            MOVWF    TBLPTRH
            MOVLW    CODE_ADDR_LOW
            MOVWF    TBLPTRL
READ_WORD
            TBLRD*+                           ; read into TABLAT and increment TBLPTR
            MOVFW    TABLAT                   ; get data
            MOVWF    WORD_EVEN
            TBLRD*+                           ; read into TABLAT and increment TBLPTR
            MOVFW    TABLAT                   ; get data
            MOVWF    WORD_ODD
```

6.4 Erasing Flash Program Memory

The minimum erase block size is 32 words or 64 bytes under firmware control. Only through the use of an external programmer, or through ICSP control, can larger blocks of program memory be bulk erased. Word erase in Flash memory is not supported.

When initiating an erase sequence from the microcontroller itself, a block of 64 bytes of program memory is erased. The Most Significant 16 bits of the TBLPTR<21:6> point to the block being erased; TBLPTR<5:0> are ignored.

The EECON1 register commands the erase operation. The EEPGD bit must be set to point to the Flash program memory. The CFGS bit must be clear to access program Flash and data EEPROM memory. The WREN bit must be set to enable write operations. The FREE bit is set to select an erase operation. The WR bit is set as part of the required instruction sequence (as shown in Example 6-2) and starts the actual erase operation. It is not necessary to load the TABLAT register with any data as it is ignored.

For protection, the write initiate sequence using EECON2 must be used.

A long write is necessary for erasing the internal Flash. Instruction execution is halted while in a long write cycle. The long write will be terminated by the internal programming timer.

6.4.1 FLASH PROGRAM MEMORY ERASE SEQUENCE

The sequence of events for erasing a block of internal program memory location is:

1. Load Table Pointer with address of row being erased.
2. Set the EECON1 register for the erase operation:
   - set EEPGD bit to point to program memory;
   - clear the CFGS bit to access program memory;
   - set WREN bit to enable writes;
   - set FREE bit to enable the erase.
3. Disable interrupts.
4. Write 55h to EECON2.
5. Write AAh to EECON2.
6. Set the WR bit. This will begin the row erase cycle.
7. The CPU will stall for duration of the erase (about 2 ms using internal timer).
8. Execute a NOP.
9. Re-enable interrupts.

EXAMPLE 6-2: ERASING A FLASH PROGRAM MEMORY ROW

```
                MOVLW   CODE_ADDR_UPPER       ; load TBLPTR with the base
                MOVWF   TBLPTRU               ; address of the memory block
                MOVLW   CODE_ADDR_HIGH
                MOVWF   TBLPTRH
                MOVLW   CODE_ADDR_LOW
                MOVWF   TBLPTRL
    ERASE_ROW
                BSF     EECON1,EEPGD          ; point to Flash program memory
                BSF     EECON1,WREN           ; enable write to memory
                BSF     EECON1,FREE           ; enable Row Erase operation
                BCF     INTCON,GIE            ; disable interrupts
                MOVLW   55h
                MOVWF   EECON2                ; write 55H
Required        MOVLW   AAh
Sequence        MOVWF   EECON2                ; write AAH
                BSF     EECON2,WR             ; start erase (CPU stall)
                NOP
                BSF     INTCON,GIE            ; re-enable interrupts
```


© 2007 Microchip Technology Inc.

6.5 Writing to Flash Program Memory

The programming block size is 4 words or 8 bytes. Word or byte programming is not supported.

Table writes are used internally to load the holding registers needed to program the Flash memory. There are 8 holding registers used by the table writes for programming.

Since the Table Latch (TABLAT) is only a single byte, the TBLWT instruction has to be executed 8 times for each programming operation. All of the table write operations will essentially be short writes because only the holding registers are written. At the end of updating 8 registers, the EECON1 register must be written to, to start the programming operation with a long write.

The long write is necessary for programming the internal Flash. Instruction execution is halted while in a long write cycle. The long write will be terminated by the internal programming timer.

FIGURE 6-5: TABLE WRITES TO FLASH PROGRAM MEMORY

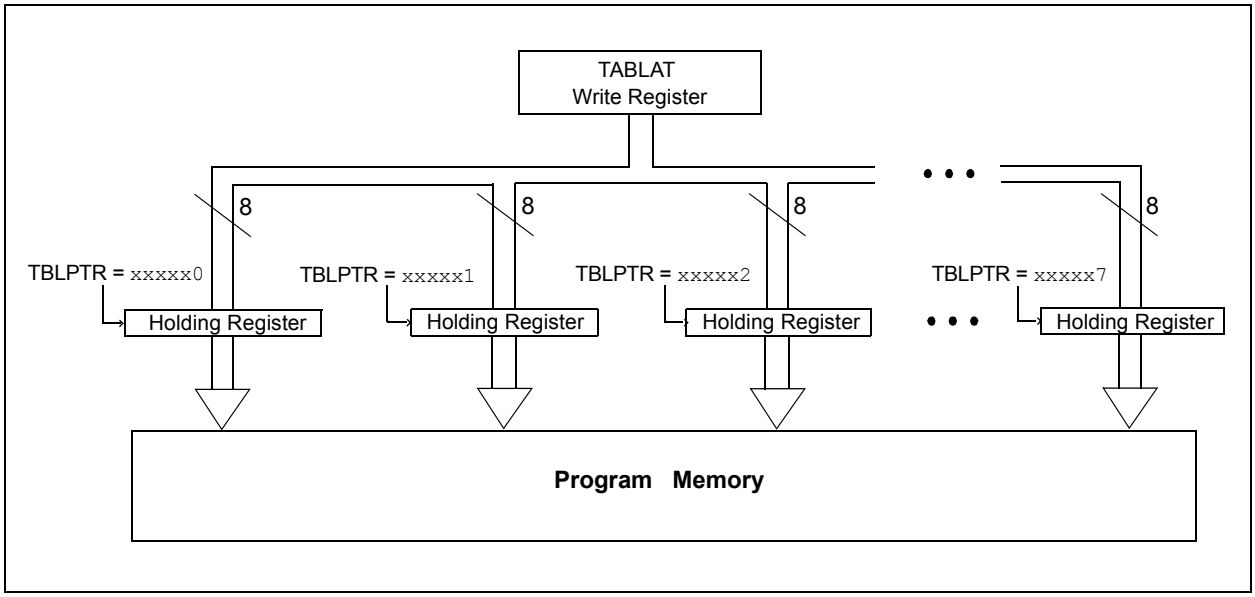

6.5.1 FLASH PROGRAM MEMORY WRITE SEQUENCE

The sequence of events for programming an internal program memory location should be:

1. Read 64 bytes into RAM.
2. Update data values in RAM as necessary.
3. Load Table Pointer with address being erased.
4. Do the row erase procedure (see **Section 6.4.1 "Flash Program Memory Erase Sequence"**).
5. Load Table Pointer with address of first byte being written.
6. Write the first 8 bytes into the holding registers with auto-increment.
7. Set the EECON1 register for the write operation:
   - set EEPGD bit to point to program memory;
   - clear the CFGS bit to access program memory;
   - set WREN bit to enable byte writes.
8. Disable interrupts.
9. Write 55h to EECON2.
10. Write AAh to EECON2.
11. Set the WR bit. This will begin the write cycle.
12. The CPU will stall for duration of the write (about 2 ms using internal timer).
13. Execute a NOP.
14. Re-enable interrupts.
15. Repeat steps 6-14 seven times, to write 64 bytes.
16. Verify the memory (table read).

This procedure will require about 18 ms to update one row of 64 bytes of memory. An example of the required code is given in Example 6-3.

EXAMPLE 6-3: WRITING TO FLASH PROGRAM MEMORY

```
                MOVLW   D'64                    ; number of bytes in erase block
                MOVWF   COUNTER
                MOVLW   BUFFER_ADDR_HIGH        ; point to buffer
                MOVWF   FSR0H
                MOVLW   BUFFER_ADDR_LOW
                MOVWF   FSR0L
                MOVLW   CODE_ADDR_UPPER         ; Load TBLPTR with the base
                MOVWF   TBLPTRU                 ; address of the memory block
                MOVLW   CODE_ADDR_HIGH
                MOVWF   TBLPTRH
                MOVLW   CODE_ADDR_LOW           ; 6 LSB = 0
                MOVWF   TBLPTRL
READ_BLOCK
                TBLRD*+                         ; read into TABLAT, and inc
                MOVFW   TABLAT                  ; get data
                MOVWF   POSTINC0                ; store data and increment FSR0
                DECFSZ  COUNTER                 ; done?
                GOTO    READ_BLOCK              ; repeat
MODIFY_WORD
                MOVLW   DATA_ADDR_HIGH          ; point to buffer
                MOVWF   FSR0H
                MOVLW   DATA_ADDR_LOW
                MOVWF   FSR0L
                MOVLW   NEW_DATA_LOW            ; update buffer word and increment FSR0
                MOVWF   POSTINC0
                MOVLW   NEW_DATA_HIGH           ; update buffer word
                MOVWF   INDF0
ERASE_BLOCK
                MOVLW   CODE_ADDR_UPPER         ; load TBLPTR with the base
                MOVWF   TBLPTRU                 ; address of the memory block
                MOVLW   CODE_ADDR_HIGH
                MOVWF   TBLPTRH
                MOVLW   CODE_ADDR_LOW           ; 6 LSB = 0
                MOVWF   TBLPTRL
                BCF     EECON1,CFGS             ; point to PROG/EEPROM memory
                BSF     EECON1,EEPGD            ; point to Flash program memory
                BSF     EECON1,WREN             ; enable write to memory
                BSF     EECON1,FREE             ; enable Row Erase operation
                BCF     INTCON,GIE              ; disable interrupts
                MOVLW   55h                     ; Required sequence
                MOVWF   EECON2                  ; write 55H
                MOVLW   AAh
                MOVWF   EECON2                  ; write AAH
                BSF     EECON1,WR               ; start erase (CPU stall)
                NOP
                BSF     INTCON,GIE              ; re-enable interrupts
WRITE_BUFFER_BACK
                MOVLW   8                       ; number of write buffer groups of 8 bytes
                MOVWF   COUNTER_HI
                MOVLW   BUFFER_ADDR_HIGH        ; point to buffer
                MOVWF   FSR0H
                MOVLW   BUFFER_ADDR_LOW
                MOVWF   FSR0L
PROGRAM_LOOP
                MOVLW   8                       ; number of bytes in holding register
                MOVWF   COUNTER
WRITE_WORD_TO_HREGS
                MOVFW   POSTINC0                ; get low byte of buffer data and increment FSR0
                MOVWF   TABLAT                  ; present data to table latch
                TBLWT+*                         ; short write
                                                ; to internal TBLWT holding register, increment
                                                  TBLPTR
                DECFSZ  COUNTER                 ; loop until buffers are full
                GOTO    WRITE_WORD_TO_HREGS
```


© 2007 Microchip Technology Inc.

EXAMPLE 6-3: WRITING TO FLASH PROGRAM MEMORY (CONTINUED)

```
PROGRAM_MEMORY
                BCF     INTCON,GIE          ; disable interrupts
                MOVLW   55h                 ; required sequence
                MOVWF   EECON2              ; write 55H
                MOVLW   AAh
                MOVWF   EECON2              ; write AAH
                BSF     EECON1,WR           ; start program (CPU stall)
                NOP
                BSF     INTCON,GIE          ; re-enable interrupts
                DECFSZ  COUNTER_HI          ; loop until done
                GOTO    PROGRAM_LOOP
                BCF     EECON1,WREN         ; disable write to memory
```

6.5.2 WRITE VERIFY

Depending on the application, good programming practice may dictate that the value written to the memory should be verified against the original value. This should be used in applications where excessive writes can stress bits near the specification limit.

6.5.3 UNEXPECTED TERMINATION OF WRITE OPERATION

If a write is terminated by an unplanned event, such as loss of power or an unexpected Reset, the memory location just programmed should be verified and reprogrammed if needed. The WRERR bit is set when a write operation is interrupted by a $\overline{\text{MCLR}}$ Reset, or a WDT Time-out Reset, during normal operation. In these situations, users can check the WRERR bit and rewrite the location.

6.6 Flash Program Operation During Code Protection

See **Section 23.0 “Special Features of the CPU”** (**Section 23.5 “Program Verification and Code Protection”**) for details on code protection of Flash program memory.

TABLE 6-2: REGISTERS ASSOCIATED WITH PROGRAM FLASH MEMORY

Name	Bit 7	Bit 6	Bit 5	Bit 4	Bit 3	Bit 2	Bit 1	Bit 0	Value on: POR, BOR	Value on all other Resets
TBLPTRU	—	—	bit 21	Program Memory Table Pointer Upper Byte (TBLPTR<20:16>)					--00 0000	--00 0000
TBPLTRH	Program Memory Table Pointer High Byte (TBLPTR<15:8>)								0000 0000	0000 0000
TBLPTRL	Program Memory Table Pointer High Byte (TBLPTR<7:0>)								0000 0000	0000 0000
TABLAT	Program Memory Table Latch								0000 0000	0000 0000
INTCON	GIE/GIEH	PEIE/GIEL	TMR0IE	INTE	RBIE	TMR0IF	INTF	RBIF	0000 000x	0000 000u
EECON2	EEPROM Control Register 2 (not a physical register)								—	—
EECON1	EEPGD	CFGS	—	FREE	WRERR	WREN	WR	RD	xx-0 x000	uu-0 u000
IPR2	OSCFIP	CMIP	—	EEIP	BCLIP	LVDIP	TMR3IP	CCP2IP	11-1 1111	---1 1111
PIR2	OSCFIF	CMIF	—	EEIF	BCLIF	LVDIF	TMR3IF	CCP2IF	00-0 0000	---0 0000
PIE2	OSCFIE	CMIE	—	EEIE	BCLIE	LVDIE	TMR3IE	CCP2IE	00-0 0000	---0 0000

Legend: x = unknown, u = unchanged, r = reserved, - = unimplemented, read as ‘0’.
Shaded cells are not used during Flash/EEPROM access.

NOTES:

© 2007 Microchip Technology Inc.

7.0 DATA EEPROM MEMORY

The data EEPROM is readable and writable during normal operation over the entire VDD range. The data memory is not directly mapped in the register file space. Instead, it is indirectly addressed through the Special Function Registers (SFR).

There are four SFRs used to read and write the program and data EEPROM memory. These registers are:

- EECON1
- EECON2
- EEDATA
- EEADR

The EEPROM data memory allows byte read and write. When interfacing to the data memory block, EEDATA holds the 8-bit data for read/write and EEADR holds the address of the EEPROM location being accessed. These devices have 256 bytes of data EEPROM with an address range from 00h to FFh.

The EEPROM data memory is rated for high erase/write cycle endurance. A byte write automatically erases the location and writes the new data (erase-before-write). The write time is controlled by an on-chip timer. The write time will vary with voltage and temperature, as well as from chip to chip. Please refer to parameter D122 (Table 26-1 in **Section 26.0 "Electrical Characteristics"**) for exact limits.

7.1 EEADR

The address register can address 256 bytes of data EEPROM.

7.2 EECON1 and EECON2 Registers

EECON1 is the control register for memory accesses.

EECON2 is not a physical register. Reading EECON2 will read all '0's. The EECON2 register is used exclusively in the memory write and erase sequences.

Control bit EEPGD determines if the access will be to program or data EEPROM memory. When clear, operations will access the data EEPROM memory. When set, program memory is accessed.

Control bit, CFGS, determines if the access will be to the Configuration registers or to program memory/data EEPROM memory. When set, subsequent operations access Configuration registers. When CFGS is clear, the EEPGD bit selects either Flash program or data EEPROM memory.

The WREN bit enables and disables erase and write operations. When set, erase and write operations are allowed. When clear, erase and write operations are disabled; the WR bit cannot be set while the WREN bit is clear. This mechanism helps to prevent accidental writes to memory due to errant (unexpected) code execution.

Firmware should keep the WREN bit clear at all times except when starting erase or write operations. Once firmware has set the WR bit, the WREN bit may be cleared. Clearing the WREN bit will not affect the operation in progress.

The WRERR bit is set when a write operation is interrupted by a Reset. In these situations, the user can check the WRERR bit and rewrite the location. It is necessary to reload the data and address registers (EEDATA and EEADR), as these registers have cleared as a result of the Reset.

Control bits, RD and WR, start read and erase/write operations, respectively. These bits are set by firmware and cleared by hardware at the completion of the operation.

The RD bit cannot be set when accessing program memory (EEPGD = 1). Program memory is read using table read instructions. See **Section 6.1 "Table Reads and Table Writes"** regarding table reads.

Note:	Interrupt flag bit, EEIF in the PIR2 register, is set when write is complete. It must be cleared in software.

REGISTER 7-1: EECON1: DATA EEPROM CONTROL REGISTER 1

R/W-x	R/W-x	U-0	R/W-0	R/W-x	R/W-0	R/S-0	R/S-0
EEPGD	CFGS	—	FREE	WRERR(1)	WREN	WR	RD
bit 7							bit 0

Legend:	S = Settable bit		
R = Readable bit	W = Writable bit	U = Unimplemented bit, read as '0'	
-n = Value at POR	'1' = Bit is set	'0' = Bit is cleared	x = Bit is unknown

bit 7 **EEPGD:** Flash Program or Data EEPROM Memory Select bit
1 = Access Flash program memory
0 = Access data EEPROM memory

bit 6 **CFGS:** Flash Program/Data EEPROM or Configuration Select bit
1 = Access Configuration or Calibration registers
0 = Access Flash program or data EEPROM memory

bit 5 **Unimplemented:** Read as '0'

bit 4 **FREE:** Flash Row Erase Enable bit
1 = Erase the program memory row addressed by TBLPTR on the next WR command (cleared by completion of erase operation)
0 = Perform write-only

bit 3 **WRERR:** EEPROM Error Flag bit(1)
1 = A write operation was prematurely terminated ($\overline{\text{MCLR}}$ or WDT Reset during self-timed erase or program operation)
0 = The write operation completed normally

bit 2 **WREN:** Erase/Write Enable bit
1 = Allows write cycles
0 = Inhibits write cycles

bit 1 **WR:** Write Control bit
1 = Initiates a data EEPROM erase/write cycle or a program memory erase cycle or write cycle (The operation is self-timed and the bit is cleared by hardware once write is complete. The WR bit can only be set (not cleared) in software.)
0 = Write cycle is completed

bit 0 **RD:** Read Control bit
1 = Initiates a memory read (Read takes one cycle. RD is cleared in hardware. The RD bit can only be set (not cleared) in software. RD bit cannot be set when EEPGD = 1.)
0 = Read completed

Note 1: When a WRERR occurs, the EEPGD or FREE bits are not cleared. This allows tracing of the error condition.

© 2007 Microchip Technology Inc.

7.3 Reading the Data EEPROM Memory

To read a data memory location, the user must write the address to the EEADR register, clear the EEPGD control bit (EECON1<7>) and then set control bit, RD (EECON1<0>). The data is available for the very next instruction cycle; therefore, the EEDATA register can be read by the next instruction. EEDATA will hold this value until another read operation or until it is written to by the user (during a write operation).

7.4 Writing to the Data EEPROM Memory

To write an EEPROM data location, the address must first be written to the EEADR register and the data written to the EEDATA register. The sequence in Example 7-2 must be followed to initiate the write cycle.

The write will not begin if this sequence is not exactly followed (write 55h to EECON2, write AAh to EECON2, then set WR bit) for each byte. It is strongly recommended that interrupts be disabled during this code segment.

Additionally, the WREN bit in EECON1 must be set to enable writes. This mechanism prevents accidental writes to data EEPROM due to unexpected code execution (i.e., runaway programs). The WREN bit should be kept clear at all times except when updating the EEPROM. The WREN bit is not cleared by hardware.

After a write sequence has been initiated, EECON1, EEADR and EEDATA cannot be modified. The WR bit will be inhibited from being set unless the WREN bit is set. The WREN bit must be set on a previous instruction. Both WR and WREN cannot be set with the same instruction.

At the completion of the write cycle, the WR bit is cleared in hardware and the EEPROM Interrupt Flag bit (EEIF) is set. The user may either enable this interrupt or poll this bit. EEIF must be cleared by software.

7.5 Write Verify

Depending on the application, good programming practice may dictate that the value written to the memory should be verified against the original value. This should be used in applications where excessive writes can stress bits near the specification limit.

7.6 Protection Against Spurious Write

There are conditions when the device may not want to write to the data EEPROM memory. To protect against spurious EEPROM writes, various mechanisms have been built-in. On power-up, the WREN bit is cleared. Also, the Power-up Timer (72 ms duration) prevents EEPROM write.

The write initiate sequence and the WREN bit together help prevent an accidental write during brown-out, power glitch, or software malfunction.

EXAMPLE 7-1: DATA EEPROM READ

```
        MOVLW   DATA_EE_ADDR        ;
        MOVWF   EEADR               ; Data Memory Address to read
        BCF     EECON1, EEPGD       ; Point to DATA memory
        BSF     EECON1, RD          ; EEPROM Read
        MOVF    EEDATA, W           ; W = EEDATA
```

EXAMPLE 7-2: DATA EEPROM WRITE

```
            MOVLW   DATA_EE_ADDR        ;
            MOVWF   EEADR               ; Data Memory Address to write
            MOVLW   DATA_EE_DATA        ;
            MOVWF   EEDATA              ; Data Memory Value to write
            BCF     EECON1, EEPGD       ; Point to DATA memory
            BSF     EECON1, WREN        ; Enable writes
            BCF     INTCON, GIE         ; Disable Interrupts
            MOVLW   55h                 ;
Required    MOVWF   EECON2              ; Write 55h
Sequence    MOVLW   AAh                 ;
            MOVWF   EECON2              ; Write AAh
            BSF     EECON1, WR          ; Set WR bit to begin write
            BSF     INTCON, GIE         ; Enable Interrupts

            SLEEP                       ; Wait for interrupt to signal write complete
            BCF     EECON1, WREN        ; Disable writes
```

7.7 Operation During Code-Protect

Data EEPROM memory has its own code-protect bits in Configuration Words. External read and write operations are disabled if either of these mechanisms are enabled.

The microcontroller itself can both read and write to the internal Data EEPROM regardless of the state of the code-protect Configuration bit. Refer to **Section 23.0 "Special Features of the CPU"** for additional information.

7.8 Using the Data EEPROM

The data EEPROM is a high-endurance, byte addressable array that has been optimized for the storage of frequently changing information (e.g., program variables or other data that are updated often). Frequently changing values will typically be updated more often than specification D124 or D124A. If this is not the case, an array refresh must be performed. For this reason, variables that change infrequently (such as constants, IDs, calibration, etc.) should be stored in Flash program memory.

A simple data EEPROM refresh routine is shown in Example 7-3.

Note:	If data EEPROM is only used to store constants and/or data that changes rarely, an array refresh is likely not required. See specification D124 or D124A.

EXAMPLE 7-3: DATA EEPROM REFRESH ROUTINE

```
        CLRF    EEADR                   ; Start at address 0
        BCF     EECON1, CFGS            ; Set for memory
        BCF     EECON1, EEPGD           ; Set for Data EEPROM
        BCF     INTCON, GIE             ; Disable interrupts
        BSF     EECON1, WREN            ; Enable writes
LOOP                                    ; Loop to refresh array
        BSF     EECON1, RD              ; Read current address
        MOVLW   55h                     ;
        MOVWF   EECON2                  ; Write 55h
        MOVLW   AAh                     ;
        MOVWF   EECON2                  ; Write AAh
        BSF     EECON1, WR              ; Set WR bit to begin write
        BTFSC   EECON1, WR              ; Wait for write to complete
        BRA     $-2
        INCFSZ  EEADR, F                ; Increment address
        BRA     Loop                    ; Not zero, do it again

        BCF     EECON1, WREN            ; Disable writes
        BSF     INTCON, GIE             ; Enable interrupts
```

TABLE 7-1: REGISTERS ASSOCIATED WITH DATA EEPROM MEMORY

Name	Bit 7	Bit 6	Bit 5	Bit 4	Bit 3	Bit 2	Bit 1	Bit 0	Value on: POR, BOR	Value on all other Resets
INTCON	GIE/GIEH	PEIE/GIEL	TMR0IE	INTE	RBIE	TMR0IF	INTF	RBIF	0000 000x	0000 000u
EEADR	EEPROM Address Register								0000 0000	0000 0000
EEDATA	EEPROM Data Register								0000 0000	0000 0000
EECON2	EEPROM Control Register 2 (not a physical register)								—	—
EECON1	EEPGD	CFGS	—	FREE	WRERR	WREN	WR	RD	xx-0 x000	uu-0 u000
IPR2	OSCFIP	CMIP	—	EEIP	BCLIP	LVDIP	TMR3IP	CCP2IP	11-1 1111	---1 1111
PIR2	OSCFIF	CMIF	—	EEIF	BCLIF	LVDIF	TMR3IF	CCP2IF	00-0 0000	---0 0000
PIE2	OSCFIE	CMIE	—	EEIE	BCLIE	LVDIE	TMR3IE	CCP2IE	00-0 0000	---0 0000

Legend: x = unknown, u = unchanged, r = reserved, - = unimplemented, read as '0'.
Shaded cells are not used during Flash/EEPROM access.

© 2007 Microchip Technology Inc.

8.0 8 X 8 HARDWARE MULTIPLIER

8.1 Introduction

An 8 x 8 hardware multiplier is included in the ALU of the PIC18F2X20/4X20 devices. By making the multiply a hardware operation, it completes in a single instruction cycle. This is an unsigned multiply that gives a 16-bit result. The result is stored into the 16-bit product register pair (PRODH:PRODL). The multiplier does not affect any flags in the STATUS register.

Making the 8 x 8 multiplier execute in a single-cycle gives the following advantages:

- Higher computational throughput
- Reduces code size requirements for multiply algorithms

The performance increase allows the device to be used in applications previously reserved for Digital Signal Processors.

Table 8-1 shows a performance comparison between enhanced devices using the single-cycle hardware multiply and performing the same function without the hardware multiply.

8.2 Operation

Example 8-1 shows the sequence to do an 8 x 8 unsigned multiply. Only one instruction is required when one argument of the multiply is already loaded in the WREG register.

Example 8-2 shows the sequence to do an 8 x 8 signed multiply. To account for the sign bits of the arguments, each argument's Most Significant bit (MSb) is tested and the appropriate subtractions are done.

EXAMPLE 8-1: 8 x 8 UNSIGNED MULTIPLY ROUTINE

```
MOVF        ARG1, W     ;
MULWF       ARG2        ; ARG1 * ARG2 ->
                        ;   PRODH:PRODL
```

EXAMPLE 8-2: 8 x 8 SIGNED MULTIPLY ROUTINE

```
MOVF        ARG1, W
MULWF       ARG2        ; ARG1 * ARG2 ->
                        ; PRODH:PRODL
BTFSC       ARG2, SB    ; Test Sign Bit
SUBWF       PRODH, F    ; PRODH = PRODH
                        ;         - ARG1
MOVF        ARG2, W
BTFSC       ARG1, SB    ; Test Sign Bit
SUBWF       PRODH, F    ; PRODH = PRODH
                        ;         - ARG2
```

TABLE 8-1: PERFORMANCE COMPARISON

Routine	Multiply Method	Program Memory (Words)	Cycles (Max)	Time		
				@ 40 MHz	@ 10 MHz	@ 4 MHz
8 x 8 unsigned	Without hardware multiply	13	69	6.9 μs	27.6 μs	69 μs
	Hardware multiply	1	1	100 ns	400 ns	1 μs
8 x 8 signed	Without hardware multiply	33	91	9.1 μs	36.4 μs	91 μs
	Hardware multiply	6	6	600 ns	2.4 μs	6 μs
16 x 16 unsigned	Without hardware multiply	21	242	24.2 μs	96.8 μs	242 μs
	Hardware multiply	28	28	2.8 μs	11.2 μs	28 μs
16 x 16 signed	Without hardware multiply	52	254	25.4 μs	102.6 μs	254 μs
	Hardware multiply	35	40	4.0 μs	16.0 μs	40 μs

Example 8-3 shows the sequence to do a 16 x 16 unsigned multiply. Equation 8-1 shows the algorithm that is used. The 32-bit result is stored in four registers, RES3:RES0.

EQUATION 8-1: 16 x 16 UNSIGNED MULTIPLICATION ALGORITHM

$$
\begin{aligned}
RES3:RES0 &= ARG1H:ARG1L \bullet ARG2H:ARG2L \\
&= (ARG1H \bullet ARG2H \bullet 2^{16}) + \\
&\quad (ARG1H \bullet ARG2L \bullet 2^{8}) + \\
&\quad (ARG1L \bullet ARG2H \bullet 2^{8}) + \\
&\quad (ARG1L \bullet ARG2L)
\end{aligned}
$$

EXAMPLE 8-3: 16 x 16 UNSIGNED MULTIPLY ROUTINE

```
    MOVF    ARG1L, W
    MULWF   ARG2L         ; ARG1L * ARG2L ->
                          ; PRODH:PRODL
    MOVFF   PRODH, RES1   ;
    MOVFF   PRODL, RES0   ;
;
    MOVF    ARG1H, W
    MULWF   ARG2H         ; ARG1H * ARG2H ->
                          ; PRODH:PRODL
    MOVFF   PRODH, RES3   ;
    MOVFF   PRODL, RES2   ;
;
    MOVF    ARG1L, W
    MULWF   ARG2H         ; ARG1L * ARG2H ->
                          ; PRODH:PRODL
    MOVF    PRODL, W      ;
    ADDWF   RES1, F       ; Add cross
    MOVF    PRODH, W      ; products
    ADDWFC  RES2, F       ;
    CLRF    WREG          ;
    ADDWFC  RES3, F       ;
;
    MOVF    ARG1H, W      ;
    MULWF   ARG2L         ; ARG1H * ARG2L ->
                          ; PRODH:PRODL
    MOVF    PRODL, W      ;
    ADDWF   RES1, F       ; Add cross
    MOVF    PRODH, W      ; products
    ADDWFC  RES2, F       ;
    CLRF    WREG          ;
    ADDWFC  RES3, F       ;
```

Example 8-4 shows the sequence to do a 16 x 16 signed multiply. Equation 8-2 shows the algorithm used. The 32-bit result is stored in four registers, RES3:RES0. To account for the sign bits of the arguments, each argument pairs' Most Significant bit (MSb) is tested and the appropriate subtractions are done.

EQUATION 8-2: 16 x 16 SIGNED MULTIPLICATION ALGORITHM

$$
\begin{aligned}
RES3:RES0 &= ARG1H:ARG1L \bullet ARG2H:ARG2L \\
&= (ARG1H \bullet ARG2H \bullet 2^{16}) + \\
&\quad (ARG1H \bullet ARG2L \bullet 2^{8}) + \\
&\quad (ARG1L \bullet ARG2H \bullet 2^{8}) + \\
&\quad (ARG1L \bullet ARG2L) + \\
&\quad (-1 \bullet ARG2H\langle 7\rangle \bullet ARG1H:ARG1L \bullet 2^{16}) + \\
&\quad (-1 \bullet ARG1H\langle 7\rangle \bullet ARG2H:ARG2L \bullet 2^{16})
\end{aligned}
$$

EXAMPLE 8-4: 16 x 16 SIGNED MULTIPLY ROUTINE

```
    MOVF    ARG1L, W
    MULWF   ARG2L         ; ARG1L * ARG2L ->
                          ; PRODH:PRODL
    MOVFF   PRODH, RES1   ;
    MOVFF   PRODL, RES0   ;
;
    MOVF    ARG1H, W
    MULWF   ARG2H         ; ARG1H * ARG2H ->
                          ; PRODH:PRODL
    MOVFF   PRODH, RES3   ;
    MOVFF   PRODL, RES2   ;
;
    MOVF    ARG1L, W
    MULWF   ARG2H         ; ARG1L * ARG2H ->
                          ; PRODH:PRODL
    MOVF    PRODL, W      ;
    ADDWF   RES1, F       ; Add cross
    MOVF    PRODH, W      ; products
    ADDWFC  RES2, F       ;
    CLRF    WREG          ;
    ADDWFC  RES3, F       ;
;
    MOVF    ARG1H, W      ;
    MULWF   ARG2L         ; ARG1H * ARG2L ->
                          ; PRODH:PRODL
    MOVF    PRODL, W      ;
    ADDWF   RES1, F       ; Add cross
    MOVF    PRODH, W      ; products
    ADDWFC  RES2, F       ;
    CLRF    WREG          ;
    ADDWFC  RES3, F       ;
;
    BTFSS   ARG2H, 7      ; ARG2H:ARG2L neg?
    BRA     SIGN_ARG1     ; no, check ARG1
    MOVF    ARG1L, W      ;
    SUBWF   RES2          ;
    MOVF    ARG1H, W      ;
    SUBWFB  RES3
;
SIGN_ARG1
    BTFSS   ARG1H, 7      ; ARG1H:ARG1L neg?
    BRA     CONT_CODE     ; no, done
    MOVF    ARG2L, W      ;
    SUBWF   RES2          ;
    MOVF    ARG2H, W      ;
    SUBWFB  RES3
;
CONT_CODE
   :
```


© 2007 Microchip Technology Inc.

9.0 INTERRUPTS

The PIC18F2320/4320 devices have multiple interrupt sources and an interrupt priority feature that allows each interrupt source to be assigned a high-priority level or a low-priority level. The high-priority interrupt vector is at 000008h and the low-priority interrupt vector is at 000018h. High-priority interrupt events will interrupt any low-priority interrupts that may be in progress.

There are ten registers which are used to control interrupt operation. These registers are:

- RCON
- INTCON
- INTCON2
- INTCON3
- PIR1, PIR2
- PIE1, PIE2
- IPR1, IPR2

It is recommended that the Microchip header files supplied with MPLAB® IDE be used for the symbolic bit names in these registers. This allows the assembler/compiler to automatically take care of the placement of these bits within the specified register.

In general, each interrupt source has three bits to control its operation. The functions of these bits are:

- Flag bit to indicate that an interrupt event occurred
- Enable bit that allows program execution to branch to the interrupt vector address when the flag bit is set
- Priority bit to select high priority or low priority (most interrupt sources have priority bits)

The interrupt priority feature is enabled by setting the IPEN bit (RCON<7>). When interrupt priority is enabled, there are two bits which enable interrupts globally. Setting the GIEH bit (INTCON<7>) enables all interrupts that have the priority bit set (high priority). Setting the GIEL bit (INTCON<6>) enables all interrupts that have the priority bit cleared (low priority). When the interrupt flag, enable bit and appropriate global interrupt enable bit are set, the interrupt will vector immediately to address 000008h or 000018h, depending on the priority bit setting. Individual interrupts can be disabled through their corresponding enable bits.

When the IPEN bit is cleared (default state), the interrupt priority feature is disabled and interrupts are compatible with PIC® mid-range devices. In Compatibility mode, the interrupt priority bits for each source have no effect. INTCON<6> is the PEIE bit which enables/disables all peripheral interrupt sources. INTCON<7> is the GIE bit which enables/disables all interrupt sources. All interrupts branch to address 000008h in Compatibility mode.

When an interrupt is responded to, the global interrupt enable bit is cleared to disable further interrupts. If the IPEN bit is cleared, this is the GIE bit. If interrupt priority levels are used, this will be either the GIEH or GIEL bit. High-priority interrupt sources can interrupt a low-priority interrupt. Low-priority interrupts are not processed while high-priority interrupts are in progress.

The return address is pushed onto the stack and the PC is loaded with the interrupt vector address (000008h or 000018h). Once in the Interrupt Service Routine, the source(s) of the interrupt can be determined by polling the interrupt flag bits. The interrupt flag bits must be cleared in software before re-enabling interrupts to avoid recursive interrupts.

The “return from interrupt” instruction, `RETFIE`, exits the interrupt routine and sets the GIE bit (GIEH or GIEL if priority levels are used) which re-enables interrupts.

For external interrupt events, such as the INTx pins or the PORTB input change interrupt, the interrupt latency will be three to four instruction cycles. The exact latency is the same for one or two-cycle instructions. Individual interrupt flag bits are set regardless of the status of their corresponding enable bit or the GIE bit.

Note:	Do not use the `MOVFF` instruction to modify any of the interrupt control registers while **any** interrupt is enabled. Doing so may cause erratic microcontroller behavior.

FIGURE 9-1: INTERRUPT LOGIC

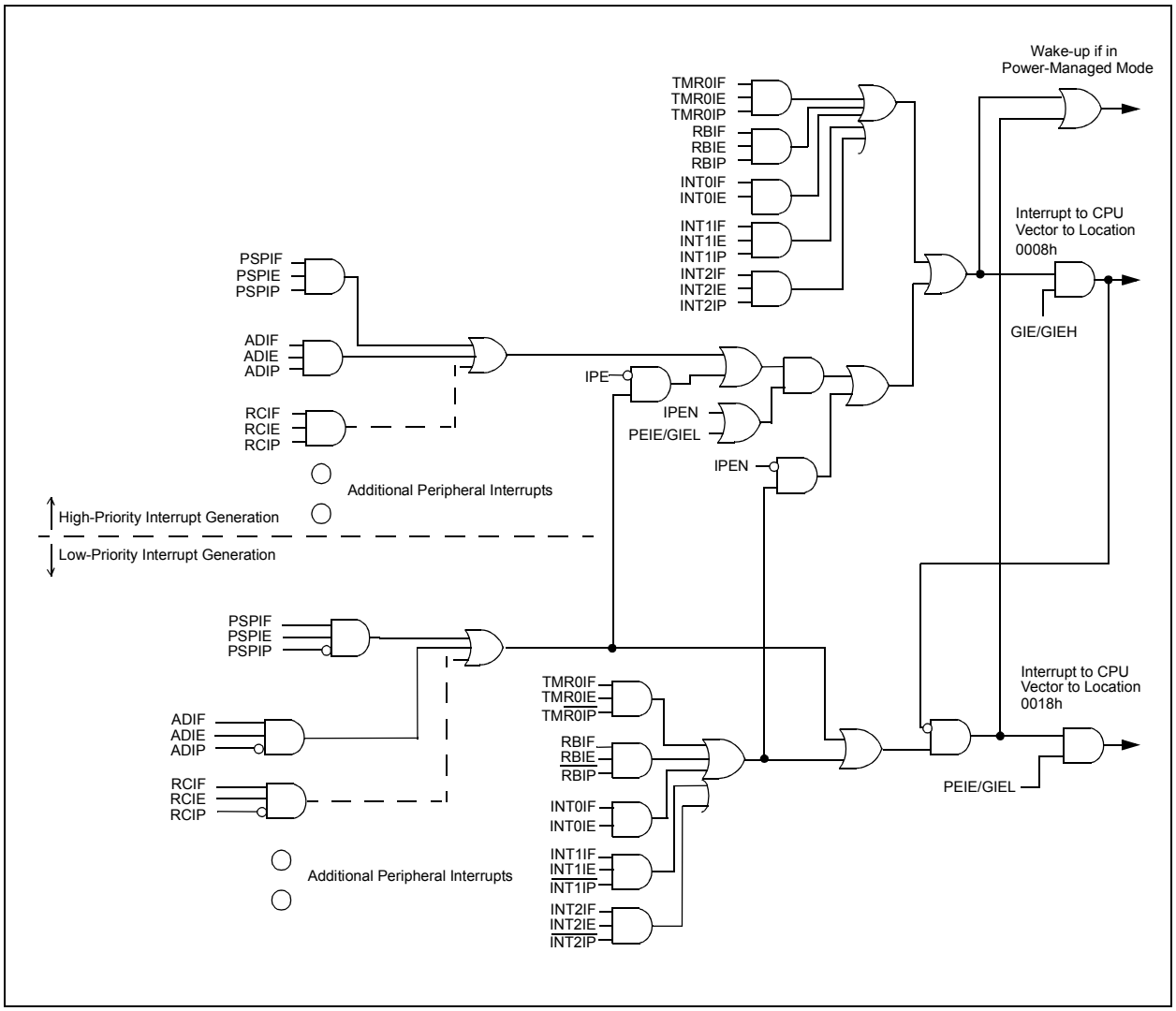

© 2007 Microchip Technology Inc.

9.1 INTCON Registers

The INTCON registers are readable and writable registers which contain various enable, priority and flag bits.

Note: Interrupt flag bits are set when an interrupt condition occurs regardless of the state of its corresponding enable bit or the global enable bit. User software should ensure the appropriate interrupt flag bits are clear prior to enabling an interrupt. This feature allows for software polling.

REGISTER 9-1: INTCON: INTERRUPT CONTROL REGISTER

R/W-0	R/W-0	R/W-0	R/W-0	R/W-0	R/W-0	R/W-0	R/W-x
GIE/GIEH	PEIE/GIEL	TMR0IE	INT0IE	RBIE	TMR0IF	INT0IF	RBIF(1)
bit 7							bit 0

Legend:			
R = Readable bit	W = Writable bit	U = Unimplemented bit, read as '0'	
-n = Value at POR	'1' = Bit is set	'0' = Bit is cleared	x = Bit is unknown

bit 7 **GIE/GIEH:** Global Interrupt Enable bit
When IPEN = 0:
1 = Enables all unmasked interrupts
0 = Disables all interrupts
When IPEN = 1:
1 = Enables all high-priority interrupts
0 = Disables all high-priority interrupts

bit 6 **PEIE/GIEL:** Peripheral Interrupt Enable bit
When IPEN = 0:
1 = Enables all unmasked peripheral interrupts
0 = Disables all peripheral interrupts
When IPEN = 1:
1 = Enables all low-priority peripheral interrupts
0 = Disables all low-priority peripheral interrupts

bit 5 **TMR0IE:** TMR0 Overflow Interrupt Enable bit
1 = Enables the TMR0 overflow interrupt
0 = Disables the TMR0 overflow interrupt

bit 4 **INT0IE:** INT0 External Interrupt Enable bit
1 = Enables the INT0 external interrupt
0 = Disables the INT0 external interrupt

bit 3 **RBIE:** RB Port Change Interrupt Enable bit
1 = Enables the RB port change interrupt
0 = Disables the RB port change interrupt

bit 2 **TMR0IF:** TMR0 Overflow Interrupt Flag bit
1 = TMR0 register has overflowed (must be cleared in software)
0 = TMR0 register did not overflow

bit 1 **INT0IF:** INT0 External Interrupt Flag bit
1 = The INT0 external interrupt occurred (must be cleared in software)
0 = The INT0 external interrupt did not occur

bit 0 **RBIF:** RB Port Change Interrupt Flag bit(1)
1 = At least one of the RB7:RB4 pins changed state (must be cleared in software)
0 = None of the RB7:RB4 pins have changed state

Note 1: A mismatch condition will continue to set this bit. Reading PORTB will end the mismatch condition and allow the bit to be cleared.

REGISTER 9-2: INTCON2: INTERRUPT CONTROL REGISTER 2

R/W-1	R/W-1	R/W-1	R/W-1	U-0	R/W-1	U-0	R/W-1
$\overline{\text{RBPU}}$	INTEDG0	INTEDG1	INTEDG2	—	TMR0IP	—	RBIP
bit 7							bit 0

Legend:			
R = Readable bit	W = Writable bit	U = Unimplemented bit, read as '0'	
-n = Value at POR	'1' = Bit is set	'0' = Bit is cleared	x = Bit is unknown

bit 7 **$\overline{\text{RBPU}}$:** PORTB Pull-up Enable bit
1 = All PORTB pull-ups are disabled
0 = PORTB pull-ups are enabled by individual port latch values

bit 6 **INTEDG0:** External Interrupt 0 Edge Select bit
1 = Interrupt on rising edge
0 = Interrupt on falling edge

bit 5 **INTEDG1:** External Interrupt 1 Edge Select bit
1 = Interrupt on rising edge
0 = Interrupt on falling edge

bit 4 **INTEDG2:** External Interrupt 2 Edge Select bit
1 = Interrupt on rising edge
0 = Interrupt on falling edge

bit 3 **Unimplemented:** Read as '0'

bit 2 **TMR0IP:** TMR0 Overflow Interrupt Priority bit
1 = High priority
0 = Low priority

bit 1 **Unimplemented:** Read as '0'

bit 0 **RBIP:** RB Port Change Interrupt Priority bit
1 = High priority
0 = Low priority

Note: Interrupt flag bits are set when an interrupt condition occurs regardless of the state of its corresponding enable bit or the global enable bit. User software should ensure the appropriate interrupt flag bits are clear prior to enabling an interrupt. This feature allows for software polling.

© 2007 Microchip Technology Inc.

REGISTER 9-3: INTCON3: INTERRUPT CONTROL REGISTER 3

R/W-1	R/W-1	U-0	R/W-0	R/W-0	U-0	R/W-0	R/W-0
INT2IP	INT1IP	—	INT2IE	INT1IE	—	INT2IF	INT1IF
bit 7							bit 0

Legend:			
R = Readable bit	W = Writable bit	U = Unimplemented bit, read as '0'	
-n = Value at POR	'1' = Bit is set	'0' = Bit is cleared	x = Bit is unknown

bit 7 **INT2IP:** INT2 External Interrupt Priority bit
1 = High priority
0 = Low priority

bit 6 **INT1IP:** INT1 External Interrupt Priority bit
1 = High priority
0 = Low priority

bit 5 **Unimplemented:** Read as '0'

bit 4 **INT2IE:** INT2 External Interrupt Enable bit
1 = Enables the INT2 external interrupt
0 = Disables the INT2 external interrupt

bit 3 **INT1IE:** INT1 External Interrupt Enable bit
1 = Enables the INT1 external interrupt
0 = Disables the INT1 external interrupt

bit 2 **Unimplemented:** Read as '0'

bit 1 **INT2IF:** INT2 External Interrupt Flag bit
1 = The INT2 external interrupt occurred (must be cleared in software)
0 = The INT2 external interrupt did not occur

bit 0 **INT1IF:** INT1 External Interrupt Flag bit
1 = The INT1 external interrupt occurred (must be cleared in software)
0 = The INT1 external interrupt did not occur

Note: Interrupt flag bits are set when an interrupt condition occurs regardless of the state of its corresponding enable bit or the global enable bit. User software should ensure the appropriate interrupt flag bits are clear prior to enabling an interrupt. This feature allows for software polling.

9.2 PIR Registers

The PIR registers contain the individual flag bits for the peripheral interrupts. Due to the number of peripheral interrupt sources, there are two Peripheral Interrupt Flag registers (PIR1, PIR2).

Note 1: Interrupt flag bits are set when an interrupt condition occurs regardless of the state of its corresponding enable bit or the global enable bit, GIE (INTCON<7>).

2: User software should ensure the appropriate interrupt flag bits are cleared prior to enabling an interrupt and after servicing that interrupt.

REGISTER 9-4: PIR1: PERIPHERAL INTERRUPT REQUEST (FLAG) REGISTER 1

R/W-0	R/W-0	R-0	R-0	R/W-0	R/W-0	R/W-0	R/W-0
PSPIF(1)	ADIF	RCIF	TXIF	SSPIF	CCP1IF	TMR2IF	TMR1IF
bit 7							bit 0

Legend:			
R = Readable bit	W = Writable bit	U = Unimplemented bit, read as '0'	
-n = Value at POR	'1' = Bit is set	'0' = Bit is cleared	x = Bit is unknown

bit 7 **PSPIF:** Parallel Slave Port Read/Write Interrupt Flag bit(1)
1 = A read or a write operation has taken place (must be cleared in software)
0 = No read or write has occurred

bit 6 **ADIF:** A/D Converter Interrupt Flag bit
1 = An A/D conversion completed (must be cleared in software)
0 = The A/D conversion is not complete

bit 5 **RCIF:** USART Receive Interrupt Flag bit
1 = The USART receive buffer, RCREG, is full (cleared when RCREG is read)
0 = The USART receive buffer is empty

bit 4 **TXIF:** USART Transmit Interrupt Flag bit
1 = The USART transmit buffer, TXREG, is empty (cleared when TXREG is written)
0 = The USART transmit buffer is full

bit 3 **SSPIF:** Master Synchronous Serial Port Interrupt Flag bit
1 = The transmission/reception is complete (must be cleared in software)
0 = Waiting to transmit/receive

bit 2 **CCP1IF:** CCP1 Interrupt Flag bit
Capture mode:
1 = A TMR1 register capture occurred (must be cleared in software)
0 = No TMR1 register capture occurred
Compare mode:
1 = A TMR1 register compare match occurred (must be cleared in software)
0 = No TMR1 register compare match occurred
PWM mode:
Unused in this mode.

bit 1 **TMR2IF:** TMR2 to PR2 Match Interrupt Flag bit
1 = TMR2 to PR2 match occurred (must be cleared in software)
0 = No TMR2 to PR2 match occurred

bit 0 **TMR1IF:** TMR1 Overflow Interrupt Flag bit
1 = TMR1 register overflowed (must be cleared in software)
0 = TMR1 register did not overflow

Note 1: This bit is reserved on PIC18F2X20 devices; always maintain this bit clear.

© 2007 Microchip Technology Inc.

REGISTER 9-5: PIR2: PERIPHERAL INTERRUPT REQUEST (FLAG) REGISTER 2

R/W-0	R/W-0	U-0	R/W-0	R/W-0	R/W-0	R/W-0	R/W-0
OSCFIF	CMIF	—	EEIF	BCLIF	LVDIF	TMR3IF	CCP2IF
bit 7							bit 0

Legend:			
R = Readable bit	W = Writable bit	U = Unimplemented bit, read as '0'	
-n = Value at POR	'1' = Bit is set	'0' = Bit is cleared	x = Bit is unknown

bit 7 **OSCFIF:** Oscillator Fail Interrupt Flag bit
1 = System oscillator failed, clock input has changed to INTOSC (must be cleared in software)
0 = System clock operating

bit 6 **CMIF:** Comparator Interrupt Flag bit
1 = Comparator input has changed (must be cleared in software)
0 = Comparator input has not changed

bit 5 **Unimplemented:** Read as '0'

bit 4 **EEIF:** Data EEPROM/Flash Write Operation Interrupt Flag bit
1 = The write operation is complete (must be cleared in software)
0 = The write operation is not complete or has not been started

bit 3 **BCLIF:** Bus Collision Interrupt Flag bit
1 = A bus collision has occurred (must be cleared in software)
0 = No bus collision occurred

bit 2 **LVDIF:** Low-Voltage Detect Interrupt Flag bit
1 = A low-voltage condition occurred (must be cleared in software)
0 = The device voltage is above the Low-Voltage Detect trip point

bit 1 **TMR3IF:** TMR3 Overflow Interrupt Flag bit
1 = TMR3 register overflowed (must be cleared in software)
0 = TMR3 register did not overflow

bit 0 **CCP2IF:** CCP2 Interrupt Flag bit
Capture mode:
1 = A TMR1 or TMR3 register capture occurred (must be cleared in software)
0 = No TMR1 or TMR3 register capture occurred
Compare mode:
1 = A TMR1 or TMR3 register compare match occurred (must be cleared in software)
0 = No TMR1 or TMR3 register compare match occurred
PWM mode:
Unused in this mode.

9.3 PIE Registers

The PIE registers contain the individual enable bits for the peripheral interrupts. Due to the number of peripheral interrupt sources, there are two Peripheral Interrupt Enable registers (PIE1, PIE2). When IPEN = 0, the PEIE bit must be set to enable any of these peripheral interrupts.

REGISTER 9-6: PIE1: PERIPHERAL INTERRUPT ENABLE REGISTER 1

R/W-0	R/W-0	R/W-0	R/W-0	R/W-0	R/W-0	R/W-0	R/W-0
PSPIE(1)	ADIE	RCIE	TXIE	SSPIE	CCP1IE	TMR2IE	TMR1IE
bit 7							bit 0

Legend:			
R = Readable bit	W = Writable bit	U = Unimplemented bit, read as '0'	
-n = Value at POR	'1' = Bit is set	'0' = Bit is cleared	x = Bit is unknown

bit 7 **PSPIE:** Parallel Slave Port Read/Write Interrupt Enable bit(1)
1 = Enables the PSP read/write interrupt
0 = Disables the PSP read/write interrupt

bit 6 **ADIE:** A/D Converter Interrupt Enable bit
1 = Enables the A/D interrupt
0 = Disables the A/D interrupt

bit 5 **RCIE:** USART Receive Interrupt Enable bit
1 = Enables the USART receive interrupt
0 = Disables the USART receive interrupt

bit 4 **TXIE:** USART Transmit Interrupt Enable bit
1 = Enables the USART transmit interrupt
0 = Disables the USART transmit interrupt

bit 3 **SSPIE:** Master Synchronous Serial Port Interrupt Enable bit
1 = Enables the MSSP interrupt
0 = Disables the MSSP interrupt

bit 2 **CCP1IE:** CCP1 Interrupt Enable bit
1 = Enables the CCP1 interrupt
0 = Disables the CCP1 interrupt

bit 1 **TMR2IE:** TMR2 to PR2 Match Interrupt Enable bit
1 = Enables the TMR2 to PR2 match interrupt
0 = Disables the TMR2 to PR2 match interrupt

bit 0 **TMR1IE:** TMR1 Overflow Interrupt Enable bit
1 = Enables the TMR1 overflow interrupt
0 = Disables the TMR1 overflow interrupt

Note 1: This bit is reserved on PIC18F2X20 devices; always maintain this bit clear.

© 2007 Microchip Technology Inc.

REGISTER 9-7: PIE2: PERIPHERAL INTERRUPT ENABLE REGISTER 2

R/W-0	R/W-0	U-0	R/W-0	R/W-0	R/W-0	R/W-0	R/W-0
OSCFIE	CMIE	—	EEIE	BCLIE	LVDIE	TMR3IE	CCP2IE
bit 7							bit 0

Legend:			
R = Readable bit	W = Writable bit	U = Unimplemented bit, read as '0'	
-n = Value at POR	'1' = Bit is set	'0' = Bit is cleared	x = Bit is unknown

bit 7 **OSCFIE:** Oscillator Fail Interrupt Enable bit
1 = Enabled
0 = Disabled

bit 6 **CMIE:** Comparator Interrupt Enable bit
1 = Enabled
0 = Disabled

bit 5 **Unimplemented:** Read as '0'

bit 4 **EEIE:** Data EEPROM/Flash Write Operation Interrupt Enable bit
1 = Enabled
0 = Disabled

bit 3 **BCLIE:** Bus Collision Interrupt Enable bit
1 = Enabled
0 = Disabled

bit 2 **LVDIE:** Low-Voltage Detect Interrupt Enable bit
1 = Enabled
0 = Disabled

bit 1 **TMR3IE:** TMR3 Overflow Interrupt Enable bit
1 = Enabled
0 = Disabled

bit 0 **CCP2IE:** CCP2 Interrupt Enable bit
1 = Enabled
0 = Disabled

9.4 IPR Registers

The IPR registers contain the individual priority bits for the peripheral interrupts. Due to the number of peripheral interrupt sources, there are two Peripheral Interrupt Priority registers (IPR1, IPR2). Using the priority bits requires that the Interrupt Priority Enable (IPEN) bit be set.

REGISTER 9-8: IPR1: PERIPHERAL INTERRUPT PRIORITY REGISTER 1

R/W-1	R/W-1	R/W-1	R/W-1	R/W-1	R/W-1	R/W-1	R/W-1
PSPIP(1)	ADIP	RCIP	TXIP	SSPIP	CCP1IP	TMR2IP	TMR1IP
bit 7							bit 0

Legend:			
R = Readable bit	W = Writable bit	U = Unimplemented bit, read as '0'	
-n = Value at POR	'1' = Bit is set	'0' = Bit is cleared	x = Bit is unknown

bit 7 **PSPIP:** Parallel Slave Port Read/Write Interrupt Priority bit(1)
1 = High priority
0 = Low priority

bit 6 **ADIP:** A/D Converter Interrupt Priority bit
1 = High priority
0 = Low priority

bit 5 **RCIP:** USART Receive Interrupt Priority bit
1 = High priority
0 = Low priority

bit 4 **TXIP:** USART Transmit Interrupt Priority bit
1 = High priority
0 = Low priority

bit 3 **SSPIP:** Master Synchronous Serial Port Interrupt Priority bit
1 = High priority
0 = Low priority

bit 2 **CCP1IP:** CCP1 Interrupt Priority bit
1 = High priority
0 = Low priority

bit 1 **TMR2IP:** TMR2 to PR2 Match Interrupt Priority bit
1 = High priority
0 = Low priority

bit 0 **TMR1IP:** TMR1 Overflow Interrupt Priority bit
1 = High priority
0 = Low priority

Note 1: This bit is reserved on PIC18F2X20 devices; always maintain this bit set.

© 2007 Microchip Technology Inc.

REGISTER 9-9: IPR2: PERIPHERAL INTERRUPT PRIORITY REGISTER 2

R/W-1	R/W-1	U-0	R/W-1	R/W-1	R/W-1	R/W-1	R/W-1
OSCFIP	CMIP	—	EEIP	BCLIP	LVDIP	TMR3IP	CCP2IP
bit 7							bit 0

Legend:			
R = Readable bit	W = Writable bit	U = Unimplemented bit, read as '0'	
-n = Value at POR	'1' = Bit is set	'0' = Bit is cleared	x = Bit is unknown

bit 7 **OSCFIP:** Oscillator Fail Interrupt Priority bit
1 = High priority
0 = Low priority

bit 6 **CMIP:** Comparator Interrupt Priority bit
1 = High priority
0 = Low priority

bit 5 **Unimplemented:** Read as '0'

bit 4 **EEIP:** Data EEPROM/Flash Write Operation Interrupt Priority bit
1 = High priority
0 = Low priority

bit 3 **BCLIP:** Bus Collision Interrupt Priority bit
1 = High priority
0 = Low priority

bit 2 **LVDIP:** Low-Voltage Detect Interrupt Priority bit
1 = High priority
0 = Low priority

bit 1 **TMR3IP:** TMR3 Overflow Interrupt Priority bit
1 = High priority
0 = Low priority

bit 0 **CCP2IP:** CCP2 Interrupt Priority bit
1 = High priority
0 = Low priority

9.5 RCON Register

The RCON register contains bits used to determine the cause of the last Reset or wake-up from power-managed mode. RCON also contains the bit that enables interrupt priorities (IPEN).

REGISTER 9-10: RCON: RESET CONTROL REGISTER

R/W-0	U-0	U-0	R/W-1	R-1	R-1	R/W-0	R/W-0
IPEN	—	—	$\overline{RI}$	$\overline{TO}$	$\overline{PD}$	$\overline{POR}$	$\overline{BOR}$
bit 7							bit 0

Legend:			
R = Readable bit	W = Writable bit	U = Unimplemented bit, read as '0'	
-n = Value at POR	'1' = Bit is set	'0' = Bit is cleared	x = Bit is unknown

bit 7 **IPEN:** Interrupt Priority Enable bit
1 = Enable priority levels on interrupts
0 = Disable priority levels on interrupts (PIC16CXXX Compatibility mode)

bit 6-5 **Unimplemented:** Read as '0'

bit 4 **$\overline{RI}$:** RESET Instruction Flag bit
1 = The RESET instruction was not executed (set by firmware only)
0 = The RESET instruction was executed causing a device Reset (must be set in software after a Brown-out Reset occurs)

bit 3 **$\overline{TO}$:** Watchdog Time-out Flag bit
1 = Set by power-up, CLRWDT instruction or SLEEP instruction
0 = A WDT time-out occurred

bit 2 **$\overline{PD}$:** Power-Down Detection Flag bit
1 = Set by power-up or by the CLRWDT instruction
0 = Cleared by execution of the SLEEP instruction

bit 1 **$\overline{POR}$:** Power-on Reset Status bit
1 = A Power-on Reset has not occurred (set by firmware only)
0 = A Power-on Reset occurred (must be set in software after a Power-on Reset occurs)

bit 0 **$\overline{BOR}$:** Brown-out Reset Status bit
1 = A Brown-out Reset has not occurred (set by firmware only)
0 = A Brown-out Reset occurred (must be set in software after a Brown-out Reset occurs)

© 2007 Microchip Technology Inc.

9.6 INTx Pin Interrupts

External interrupts on the RB0/INT0, RB1/INT1 and RB2/INT2 pins are edge triggered: either rising if the corresponding INTEDGx bit is set in the INTCON2 register, or falling if the INTEDGx bit is clear. When a valid edge appears on the RBx/INTx pin, the corresponding flag bit, INTxIF, is set. This interrupt can be disabled by clearing the corresponding enable bit, INTxIE. Flag bit, INTxIF, must be cleared in software in the Interrupt Service Routine before re-enabling the interrupt. All external interrupts (INT0, INT1 and INT2) can wake-up the processor from the power-managed modes if bit INTxIE was set prior to going into power-managed modes. If the global interrupt enable bit GIE is set, the processor will branch to the interrupt vector following wake-up.

Interrupt priority for INT1 and INT2 is determined by the value contained in the Interrupt Priority bits, INT1IP (INTCON3<6>) and INT2IP (INTCON3<7>). There is no priority bit associated with INT0. It is always a high-priority interrupt source.

9.7 TMR0 Interrupt

In 8-bit mode (which is the default), an overflow (FFh $\rightarrow$ 00h) in the TMR0 register will set flag bit TMR0IF. In 16-bit mode, an overflow (FFFFh $\rightarrow$ 0000h) in the TMR0H:TMR0L registers will set flag bit TMR0IF. The interrupt can be enabled/disabled by setting/clearing enable bit, TMR0IE (INTCON<5>). Interrupt priority for Timer0 is determined by the value contained in the interrupt priority bit, TMR0IP (INTCON2<2>). See **Section 11.0 "Timer0 Module"** for further details on the Timer0 module.

9.8 PORTB Interrupt-on-Change

An input change on PORTB<7:4> sets flag bit, RBIF (INTCON<0>). The interrupt can be enabled/disabled by setting/clearing enable bit, RBIE (INTCON<3>). Interrupt priority for PORTB interrupt-on-change is determined by the value contained in the interrupt priority bit, RBIP (INTCON2<0>).

9.9 Context Saving During Interrupts

During interrupts, the return PC address is saved on the stack. Additionally, the WREG, STATUS and BSR registers are saved on the Fast Return Stack. If a fast return from interrupt is not used (See **Section 5.3 "Fast Register Stack"**), the user may need to save the WREG, STATUS and BSR registers on entry to the Interrupt Service Routine. Depending on the user's application, other registers may also need to be saved. Example 9-1 saves and restores the WREG, STATUS and BSR registers during an Interrupt Service Routine.

EXAMPLE 9-1: SAVING STATUS, WREG AND BSR REGISTERS IN RAM

```
MOVWF   W_TEMP                  ; W_TEMP is in virtual bank
MOVFF   STATUS, STATUS_TEMP     ; STATUS_TEMP located anywhere
MOVFF   BSR, BSR_TEMP           ; BSR_TMEP located anywhere
;
; USER ISR CODE
;
MOVFF   BSR_TEMP, BSR           ; Restore BSR
MOVF    W_TEMP, W               ; Restore WREG
MOVFF   STATUS_TEMP, STATUS     ; Restore STATUS
```

NOTES:

© 2007 Microchip Technology Inc.

10.0 I/O PORTS

Depending on the device selected and features enabled, there are up to five ports available. Some pins of the I/O ports are multiplexed with an alternate function from the peripheral features on the device. In general, when a peripheral is enabled, that pin may not be used as a general purpose I/O pin.

Each port has three registers for its operation. These registers are:

- TRIS register (Data Direction register)
- PORT register (reads the levels on the pins of the device)
- LAT register (Data Latch)

The Data Latch (LAT register) is useful for read-modify-write operations on the value that the I/O pins are driving.

A simplified model of a generic I/O port without the interfaces to other peripherals is shown in Figure 10-1.

FIGURE 10-1: GENERIC I/O PORT OPERATION

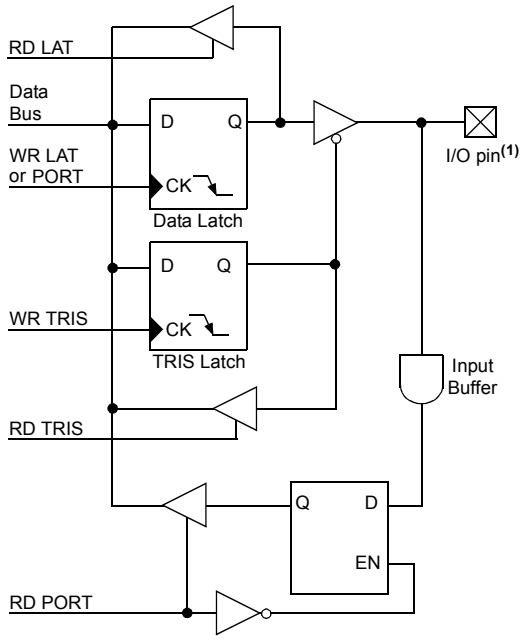

Note 1: I/O pins have diode protection to VDD and VSS.

10.1 PORTA, TRISA and LATA Registers

PORTA is an 8-bit wide, bidirectional port. The corresponding Data Direction register is TRISA. Setting a TRISA bit (= 1) will make the corresponding PORTA pin an input (i.e., put the corresponding output driver in a high-impedance mode). Clearing a TRISA bit (= 0) will make the corresponding PORTA pin an output (i.e., put the contents of the output latch on the selected pin).

Reading the PORTA register reads the status of the pins, whereas writing to it, will write to the port latch.

The Data Latch register (LATA) is also memory mapped. Read-modify-write operations on the LATA register read and write the latched output value for PORTA.

The RA4 pin is multiplexed with the Timer0 module clock input and one of the comparator outputs to become the RA4/T0CKI/C1OUT pin. Pins RA6 and RA7 are multiplexed with the main oscillator pins; they are enabled as oscillator or I/O pins by the selection of the main oscillator in Configuration Register 1H (see **Section 23.1 "Configuration Bits"** for details). When they are not used as port pins, RA6 and RA7 and their associated TRIS and LAT bits are read as '0'.

The other PORTA pins are multiplexed with analog inputs, the analog VREF+ and VREF- inputs and the comparator voltage reference output. The operation of pins, RA3:RA0 and RA5, as A/D converter inputs is selected by clearing/setting the control bits in the ADCON1 register (A/D Control Register 1). Pins RA0 through RA5 may also be used as comparator inputs or outputs by setting the appropriate bits in the CMCON register.

Note:	On a Power-on Reset, RA5 and RA3:RA0 are configured as analog inputs and read as '0'. RA4 is configured as a digital input.

The RA4/T0CKI/C1OUT pin is a Schmitt Trigger input and an open-drain output. All other PORTA pins have TTL input levels and full CMOS output drivers.

The TRISA register controls the direction of the RA pins even when they are being used as analog inputs. The user must ensure the bits in the TRISA register are maintained set when using them as analog inputs.

EXAMPLE 10-1: INITIALIZING PORTA

```
CLRF    PORTA   ;   Initialize PORTA by
                ;   clearing output
                ;   data latches
CLRF    LATA    ;   Alternate method
                ;   to clear output
                ;   data latches
MOVLW   0x0F    ;   Set all A/D pins as
MOVWF   ADCON1  ;   digital I/O pins
MOVLW   0xCF    ;   Value used to
                ;   initialize data
                ;   direction
MOVWF   TRISA   ;   Set RA<3:0> as inputs
                ;   RA<5:4> as outputs
```

FIGURE 10-2: BLOCK DIAGRAM OF RA3:RA0 AND RA5 PINS

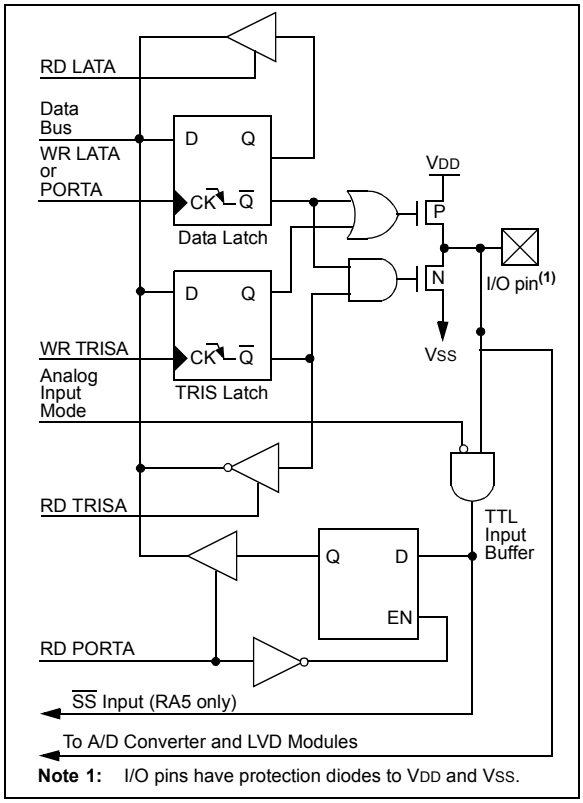

Note 1: I/O pins have protection diodes to VDD and VSS.

FIGURE 10-3: BLOCK DIAGRAM OF RA6 PIN

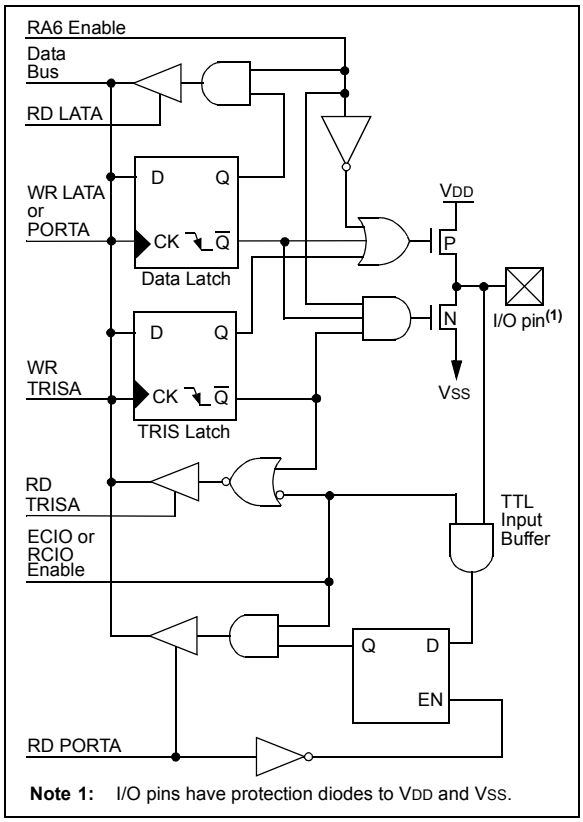

Note 1: I/O pins have protection diodes to VDD and VSS.

FIGURE 10-4: BLOCK DIAGRAM OF RA4/T0CKI PIN

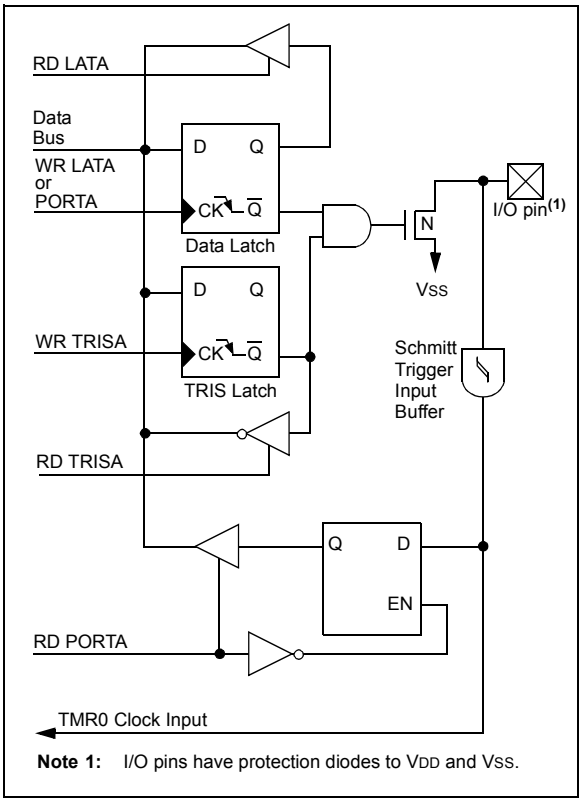

Note 1: I/O pins have protection diodes to VDD and VSS.

FIGURE 10-5: BLOCK DIAGRAM OF RA7 PIN

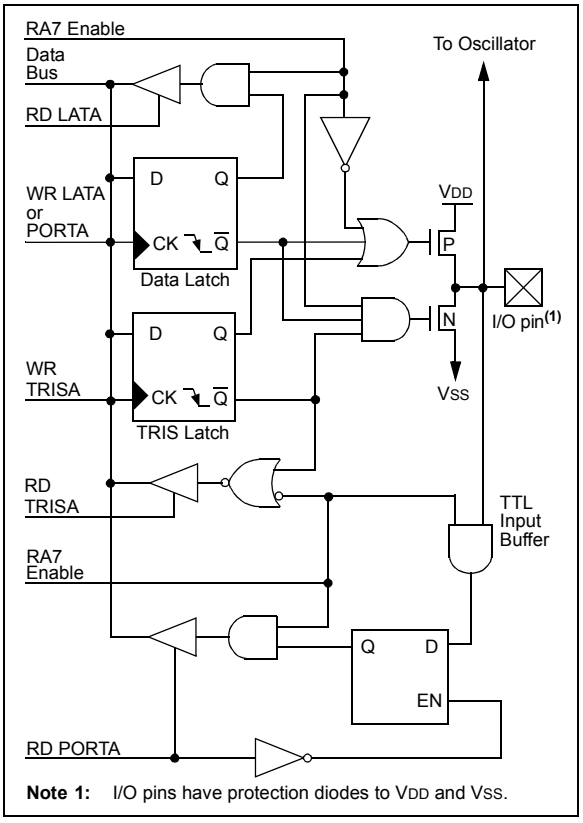

Note 1: I/O pins have protection diodes to VDD and VSS.

© 2007 Microchip Technology Inc.

TABLE 10-1: PORTA FUNCTIONS

Name	Bit#	Buffer	Function
RA0/AN0	bit 0	TTL	Input/output or analog input.
RA1/AN1	bit 1	TTL	Input/output or analog input.
RA2/AN2/VREF-/CVREF	bit 2	TTL	Input/output, analog input, VREF- or comparator VREF output.
RA3/AN3/VREF+	bit 3	TTL	Input/output, analog input or VREF+.
RA4/T0CKI/C1OUT	bit 4	ST	Input/output, external clock input for Timer0 or Comparator 1 output. Output is open-drain type.
RA5/AN4/$\overline{SS}$/LVDIN/C2OUT	bit 5	TTL	Input/output, analog input, slave select input for Master Synchronous Serial Port, Low-Voltage Detect input or Comparator 2 output.
OSC2/CLKO/RA6	bit 6	TTL	OSC2, clock output or I/O pin.
OSC1/CLKI/RA7	bit 7	TTL	OSC1, clock input or I/O pin.

Legend: TTL = TTL input, ST = Schmitt Trigger input

TABLE 10-2: SUMMARY OF REGISTERS ASSOCIATED WITH PORTA

Name	Bit 7	Bit 6	Bit 5	Bit 4	Bit 3	Bit 2	Bit 1	Bit 0	Value on POR, BOR	Value on all other Resets
PORTA	RA7(1)	RA6(1)	RA5	RA4	RA3	RA2	RA1	RA0	xx0x 0000	uu0u 0000
LATA	LATA7(1)	LATA6(1)	LATA Data Latch Register						xxxx xxxx	uuuu uuuu
TRISA	TRISA7(1)	TRISA6(1)	PORTA Data Direction Register						1111 1111	1111 1111
ADCON1	—	—	VCFG1	VCFG0	PCFG3	PCFG2	PCFG1	PCFG0	--00 0000	--00 0000
CMCON	C2OUT	C1OUT	C2INV	C1INV	CIS	CM2	CM1	CM0	0000 0111	0000 0111
CVRCON	CVREN	CVROE	CVRR	—	CVR3	CVR2	CVR1	CVR0	000- 0000	000- 0000

Legend: x = unknown, u = unchanged, - = unimplemented locations read as '0'. Shaded cells are not used by PORTA.

Note 1: RA7:RA6 and their associated latch and data direction bits are enabled as I/O pins based on oscillator configuration; otherwise, they are read as '0'.

10.2 PORTB, TRISB and LATB Registers

PORTB is an 8-bit wide, bidirectional port. The corresponding Data Direction register is TRISB. Setting a TRISB bit (= 1) will make the corresponding PORTB pin an input (i.e., put the corresponding output driver in a high-impedance mode). Clearing a TRISB bit (= 0) will make the corresponding PORTB pin an output (i.e., put the contents of the output latch on the selected pin).

The Data Latch register (LATB) is also memory mapped. Read-modify-write operations on the LATB register read and write the latched output value for PORTB.

EXAMPLE 10-2: INITIALIZING PORTB

```
CLRF    PORTB   ;   Initialize PORTB by
                ;   clearing output
                ;   data latches
CLRF    LATB    ;   Alternate method
                ;   to clear output
                ;   data latches
MOVLW   0x07    ;   Set RB<4:0> as
MOVWF   ADCON1  ;   digital I/O pins
MOVLW   0xCF    ;   Value used to
                ;   initialize data
                ;   direction
MOVWF   TRISB   ;   Set RB<3:0> as inputs
                ;   RB<5:4> as outputs
                ;   RB<7:6> as inputs
```

Each of the PORTB pins has a weak internal pull-up. A single control bit can turn on all the pull-ups. This is performed by clearing bit RBPU (INTCON2<7>). The weak pull-up is automatically turned off when the port pin is configured as an output. The pull-ups are disabled on a Power-on Reset.

Note:	On a Power-on Reset, RB4:RB0 are configured as analog inputs by default and read as '0'; RB7:RB5 are configured as digital inputs. By programming the Configuration bit, PBADEN (CONFIG3H<1>), RB4:RB0 will alternatively be configured as digital inputs on POR.

Four of the PORTB pins (RB7:RB4) have an interrupt-on-change feature. Only pins configured as inputs can cause this interrupt to occur (i.e., any RB7:RB4 pin configured as an output is excluded from the interrupt-on-change comparison). The input pins (of RB7:RB4) are compared with the old value latched on the last read of PORTB. The "mismatch" outputs of RB7:RB4 are OR'ed together to generate the RB Port Change Interrupt with Flag bit, RBIF (INTCON<0>).

This interrupt can wake the device from Sleep. The user, in the Interrupt Service Routine, can clear the interrupt in the following manner:

a) Any read or write of PORTB (except with the MOVFF (ANY), PORTB instruction). This will end the mismatch condition.

b) Clear flag bit RBIF.

A mismatch condition will continue to set flag bit RBIF. Reading PORTB will end the mismatch condition and allow flag bit RBIF to be cleared.

The interrupt-on-change feature is recommended for wake-up on key depression operation and operations where PORTB is only used for the interrupt-on-change feature. Polling of PORTB is not recommended while using the interrupt-on-change feature.

RB3 can be configured by the Configuration bit, CCP2MX, as the alternate peripheral pin for the CCP2 module (CCP2MX = 0).

FIGURE 10-6: BLOCK DIAGRAM OF RB7:RB5 PINS

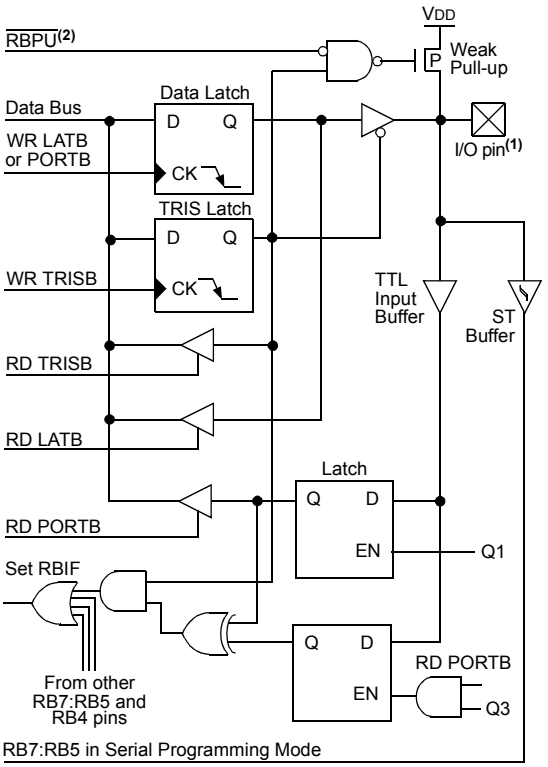

Note 1: I/O pins have diode protection to VDD and VSS.

2: To enable weak pull-ups, set the appropriate TRIS bit(s) and clear the RBPU bit (INTCON2<7>).

© 2007 Microchip Technology Inc.

FIGURE 10-7: BLOCK DIAGRAM OF RB2:RB0 PINS

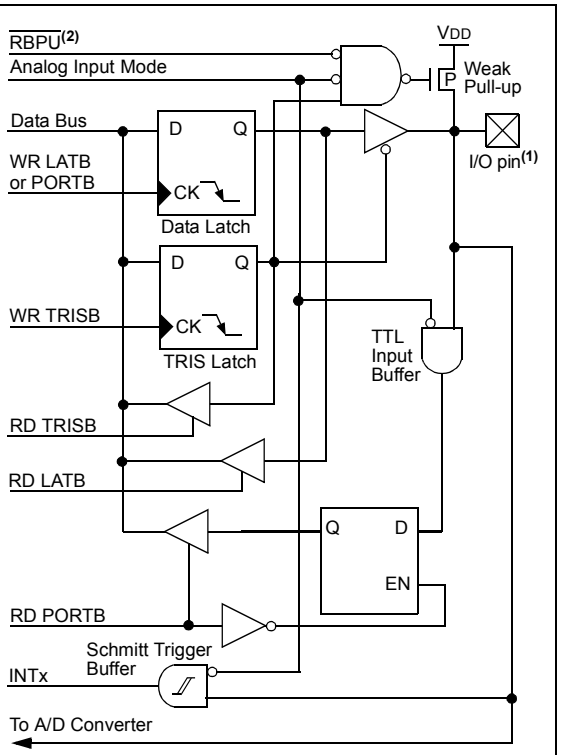

Note 1: I/O pins have diode protection to VDD and VSS.
2: To enable weak pull-ups, set the appropriate TRIS bit(s) and clear the RBPU bit (INTCON2<7>).

FIGURE 10-8: BLOCK DIAGRAM OF RB4 PIN

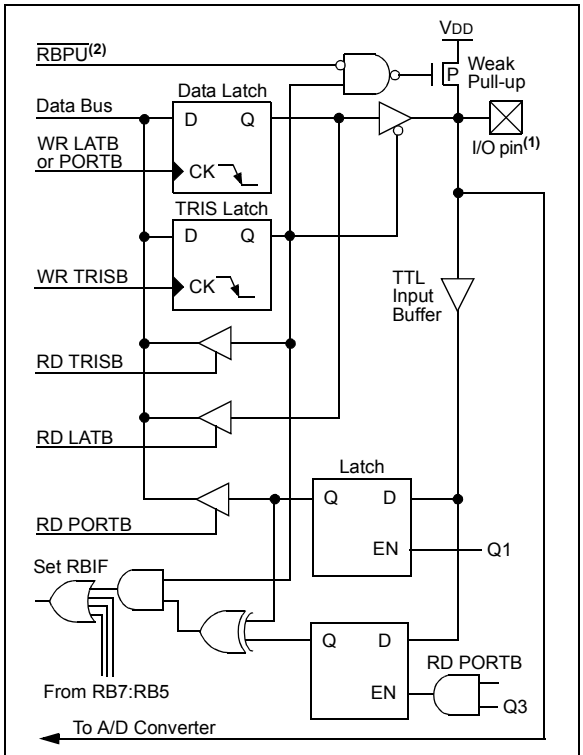

Note 1: I/O pins have diode protection to VDD and VSS.
2: To enable weak pull-ups, set the appropriate TRIS bit(s) and clear the RBPU bit (INTCON2<7>).

FIGURE 10-9: BLOCK DIAGRAM OF RB3/CCP2 PIN

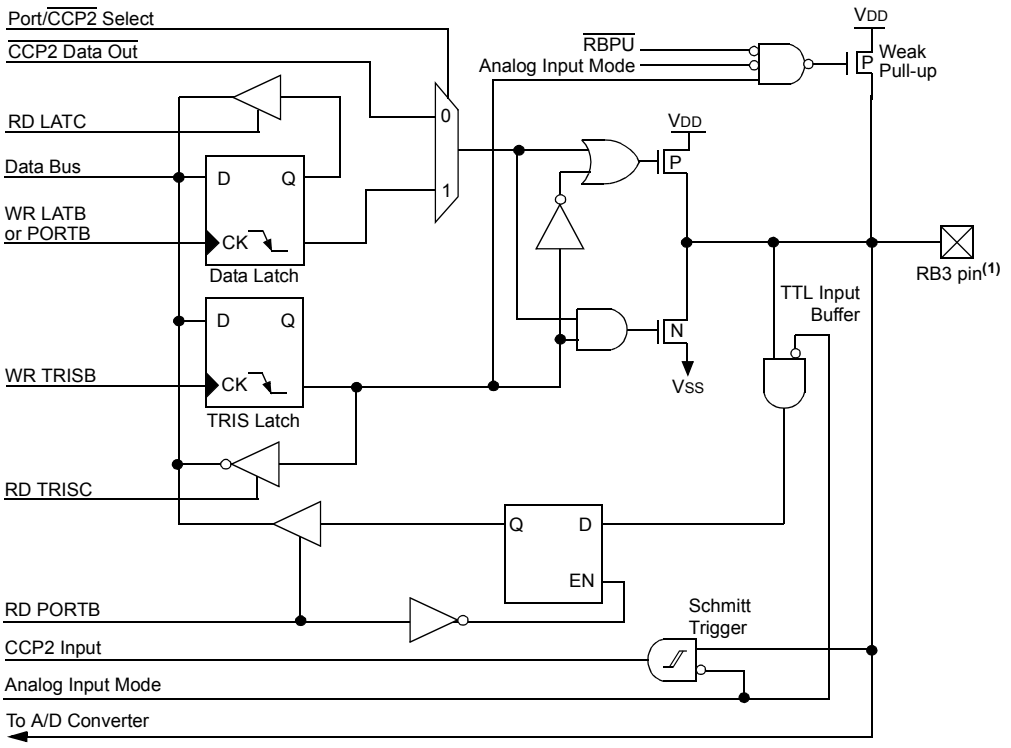

Note 1: I/O pins have diode protection to VDD and VSS.

TABLE 10-3: PORTB FUNCTIONS

Name	Bit#	Buffer	Function
RB0/AN12/INT0	bit 0	TTL(1)/ST(2)	Input/output pin, analog input or external interrupt input 0. Internal software programmable weak pull-up.
RB1/AN10/INT1	bit 1	TTL(1)/ST(2)	Input/output pin, analog input or external interrupt input 1. Internal software programmable weak pull-up.
RB2/AN8/INT2	bit 2	TTL(1)/ST(2)	Input/output pin, analog input or external interrupt input 2. Internal software programmable weak pull-up.
RB3/AN9/CCP2	bit 3	TTL(1)/ST(3)	Input/output pin or analog input. Capture 2 input/Compare 2 output/ PWM output when CCP2MX Configuration bit is set(4). Internal software programmable weak pull-up.
RB4/AN11/KBI0	bit 4	TTL	Input/output pin (with interrupt-on-change) or analog input. Internal software programmable weak pull-up.
RB5/KBI1/PGM	bit 5	TTL/ST(5)	Input/output pin (with interrupt-on-change). Internal software programmable weak pull-up. Low-voltage ICSP™ enable pin.
RB6/KBI2/PGC	bit 6	TTL/ST(5)	Input/output pin (with interrupt-on-change). Internal software programmable weak pull-up. Serial programming clock.
RB7/KBI3/PGD	bit 7	TTL/ST(5)	Input/output pin (with interrupt-on-change). Internal software programmable weak pull-up. Serial programming data.

Legend: TTL = TTL input, ST = Schmitt Trigger input

Note 1: This buffer is a TTL input when configured as digital I/O.

2: This buffer is a Schmitt Trigger input when configured as the external interrupt.

3: This buffer is a Schmitt Trigger input when configured as the CCP2 input.

4: A device Configuration bit selects which I/O pin the CCP2 pin is multiplexed on.

5: This buffer is a Schmitt Trigger input when used in Serial Programming mode.

TABLE 10-4: SUMMARY OF REGISTERS ASSOCIATED WITH PORTB

Name	Bit 7	Bit 6	Bit 5	Bit 4	Bit 3	Bit 2	Bit 1	Bit 0	Value on POR, BOR	Value on all other Resets
PORTB	RB7	RB6	RB5	RB4	RB3	RB2	RB1	RB0	xxxx xxxx	uuuu uuuu
LATB	LATB Data Latch Register								xxxx xxxx	uuuu uuuu
TRISB	PORTB Data Direction Register								1111 1111	1111 1111
INTCON	GIE/GIEH	PEIE/GIEL	TMR0IE	INT0IE	RBIE	TMR0IF	INT0IF	RBIF	0000 000x	0000 000u
INTCON2	$\overline{\text{RBPU}}$	INTEDG0	INTEDG1	INTEDG2	—	TMR0IP	—	RBIP	1111 -1-1	1111 -1-1
INTCON3	INT2IP	INT1IP	—	INT2IE	INT1IE	—	INT2IF	INT1IF	11-0 0-00	11-0 0-00
ADCON1	—	—	VCFG1	VCFG0	PCFG3	PCFG2	PCFG1	PCFG0	--00 0000	--00 0000

Legend: x = unknown, u = unchanged, — = unimplemented locations read as '0'. Shaded cells are not used by PORTB.

© 2007 Microchip Technology Inc.

10.3 PORTC, TRISC and LATC Registers

PORTC is an 8-bit wide, bidirectional port. The corresponding Data Direction register is TRISC. Setting a TRISC bit (= 1) will make the corresponding PORTC pin an input (i.e., put the corresponding output driver in a high-impedance mode). Clearing a TRISC bit (= 0) will make the corresponding PORTC pin an output (i.e., put the contents of the output latch on the selected pin).

The Data Latch register (LATC) is also memory mapped. Read-modify-write operations on the LATC register read and write the latched output value for PORTC.

PORTC is multiplexed with several peripheral functions (Table 10-5). The pins have Schmitt Trigger input buffers. RC1 is normally configured by Configuration bit, CCP2MX (CONFIG3H<0>), as the default peripheral pin of the CCP2 module (default/erased state, CCP2MX = 1).

When enabling peripheral functions, care should be taken in defining TRIS bits for each PORTC pin. Some peripherals override the TRIS bit to make a pin an output, while other peripherals override the TRIS bit to make a pin an input. The user should refer to the corresponding peripheral section for the correct TRIS bit settings.

Note:	On a Power-on Reset, these pins are configured as digital inputs.

The contents of the TRISC register are affected by peripheral overrides. Reading TRISC always returns the current contents even though a peripheral device may be overriding one or more of the pins.

EXAMPLE 10-3: INITIALIZING PORTC

```
CLRF    PORTC       ; Initialize PORTC by
                    ; clearing output
                    ; data latches
CLRF    LATC        ; Alternate method
                    ; to clear output
                    ; data latches
MOVLW   0xCF        ; Value used to
                    ; initialize data
                    ; direction
MOVWF   TRISC       ; Set RC<3:0> as inputs
                    ; RC<5:4> as outputs
                    ; RC<7:6> as inputs
```

FIGURE 10-10: PORTC BLOCK DIAGRAM (PERIPHERAL OUTPUT OVERRIDE)

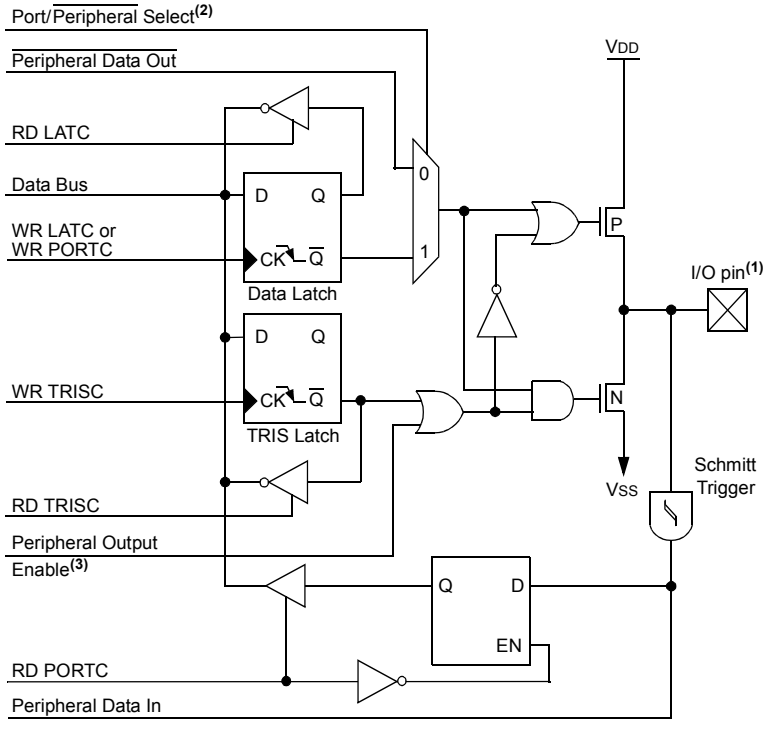

Note 1: I/O pins have diode protection to VDD and VSS.

2: Port/Peripheral Select signal selects between port data (output) and peripheral output.

3: Peripheral Output Enable is only active if Peripheral Select is active.

TABLE 10-5: PORTC FUNCTIONS

Name	Bit#	Buffer Type	Function
RC0/T1OSO/T1CKI	bit 0	ST	Input/output port pin or Timer1 oscillator output/Timer1 clock input.
RC1/T1OSI/CCP2	bit 1	ST	Input/output port pin, Timer1 oscillator input or Capture 2 input/ Compare 2 output/PWM output when CCP2MX Configuration bit is disabled.
RC2/CCP1/P1A(1)	bit 2	ST	Input/output port pin, Capture 1 input/Compare 1 output/PWM1 output or Enhanced PWM output A(1).
RC3/SCK/SCL	bit 3	ST	RC3 can also be the synchronous serial clock for both SPI and I^2C™ modes.
RC4/SDI/SDA	bit 4	ST	RC4 can also be the SPI data in (SPI mode) or data I/O (I^2C mode).
RC5/SDO	bit 5	ST	Input/output port pin or Master Synchronous Serial Port data output.
RC6/TX/CK	bit 6	ST	Input/output port pin, addressable USART asynchronous transmit or addressable USART synchronous clock.
RC7/RX/DT	bit 7	ST	Input/output port pin, addressable USART asynchronous receive or addressable USART synchronous data.

Legend: ST = Schmitt Trigger input

Note 1: Enhanced PWM output is available only on PIC18F4X20 devices.

TABLE 10-6: SUMMARY OF REGISTERS ASSOCIATED WITH PORTC

Name	Bit 7	Bit 6	Bit 5	Bit 4	Bit 3	Bit 2	Bit 1	Bit 0	Value on POR, BOR	Value on all other Resets
PORTC	RC7	RC6	RC5	RC4	RC3	RC2	RC1	RC0	xxxx xxxx	uuuu uuuu
LATC	LATC Data Latch Register								xxxx xxxx	uuuu uuuu
TRISC	PORTC Data Direction Register								1111 1111	1111 1111

Legend: x = unknown, u = unchanged

© 2007 Microchip Technology Inc.

10.4 PORTD, TRISD and LATD Registers

Note:	PORTD is only available on PIC18F4X20 devices.

PORTD is an 8-bit wide, bidirectional port. The corresponding Data Direction register is TRISD. Setting a TRISD bit (= 1) will make the corresponding PORTD pin an input (i.e., put the corresponding output driver in a high-impedance mode). Clearing a TRISD bit (= 0) will make the corresponding PORTD pin an output (i.e., put the contents of the output latch on the selected pin).

The Data Latch register (LATD) is also memory mapped. Read-modify-write operations on the LATD register read and write the latched output value for PORTD.

All pins on PORTD are implemented with Schmitt Trigger input buffers. Each pin is individually configurable as an input or output.

Three of the PORTD pins are multiplexed with outputs P1B, P1C and P1D of the Enhanced CCP module. The operation of these additional PWM output pins is covered in greater detail in **Section 16.0 "Enhanced Capture/Compare/PWM (ECCP) Module"**.

Note:	On a Power-on Reset, these pins are configured as digital inputs.

PORTD can also be configured as an 8-bit wide microprocessor port (Parallel Slave Port) by setting control bit, PSPMODE (TRISE<4>). In this mode, the input buffers are TTL. See **Section 10.6 "Parallel Slave Port"** for additional information on the Parallel Slave Port (PSP).

Note:	When the enhanced PWM mode is used with either dual or quad outputs, the PSP functions of PORTD are automatically disabled.

EXAMPLE 10-4: INITIALIZING PORTD

```
CLRF    PORTD   ; Initialize PORTD by
                ; clearing output
                ; data latches
CLRF    LATD    ; Alternate method
                ; to clear output
                ; data latches
MOVLW   0xCF    ; Value used to
                ; initialize data
                ; direction
MOVWF   TRISD   ; Set RD<3:0> as inputs
                ; RD<5:4> as outputs
                ; RD<7:6> as inputs
```

FIGURE 10-11: BLOCK DIAGRAM OF RD7:RD5 PINS

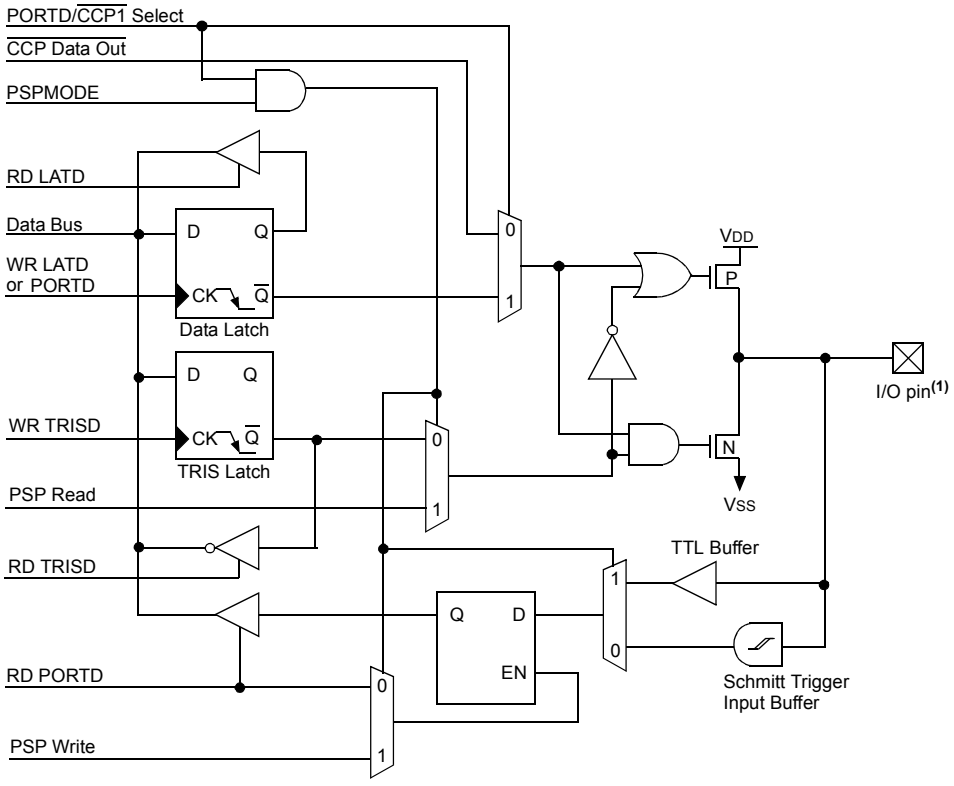

Note 1: I/O pins have diode protection to VDD and VSS.

FIGURE 10-12: BLOCK DIAGRAM OF RD4:RD0 PINS

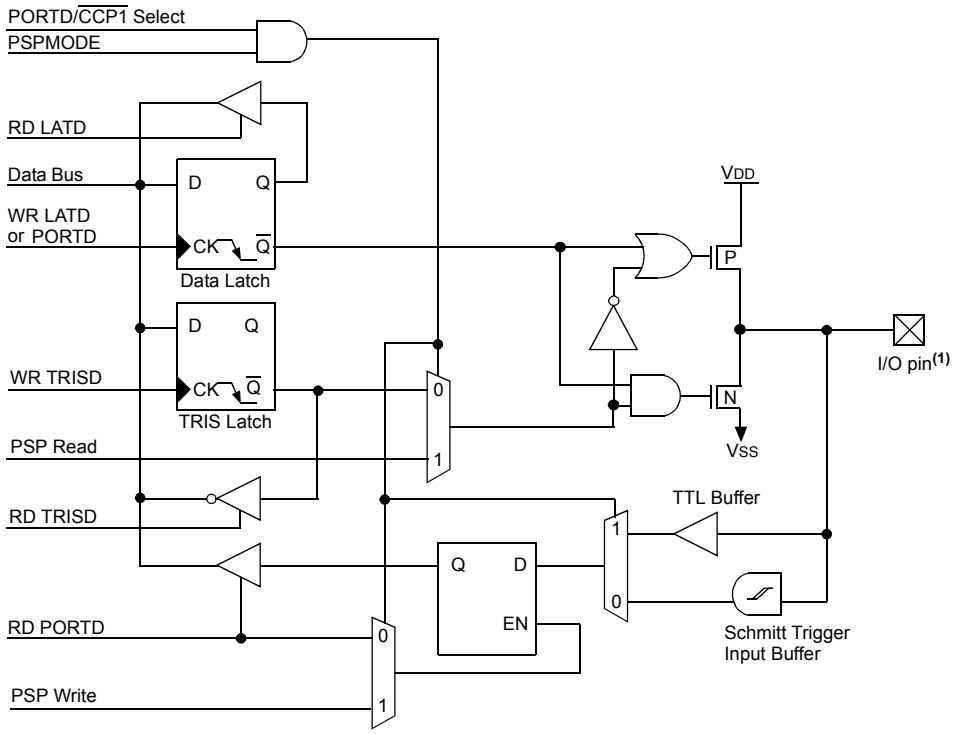

Note 1: I/O pins have diode protection to VDD and VSS.

TABLE 10-7: PORTD FUNCTIONS

Name	Bit#	Buffer Type	Function
RD0/PSP0	bit 0	ST/TTL(1)	Input/output port pin or Parallel Slave Port bit 0.
RD1/PSP1	bit 1	ST/TTL(1)	Input/output port pin or Parallel Slave Port bit 1.
RD2/PSP2	bit 2	ST/TTL(1)	Input/output port pin or Parallel Slave Port bit 2.
RD3/PSP3	bit 3	ST/TTL(1)	Input/output port pin or Parallel Slave Port bit 3.
RD4/PSP4	bit 4	ST/TTL(1)	Input/output port pin or Parallel Slave Port bit 4.
RD5/PSP5/P1B	bit 5	ST/TTL(1)	Input/output port pin, Parallel Slave Port bit 5 or Enhanced PWM output P1B.
RD6/PSP6/P1C	bit 6	ST/TTL(1)	Input/output port pin, Parallel Slave Port bit 6 or Enhanced PWM output P1C.
RD7/PSP7/P1D	bit 7	ST/TTL(1)	Input/output port pin, Parallel Slave Port bit 7 or Enhanced PWM output P1D.

Legend: ST = Schmitt Trigger input, TTL = TTL input

Note 1: Input buffers are Schmitt Triggers when in I/O mode and TTL buffers when in Parallel Slave Port mode.

TABLE 10-8: SUMMARY OF REGISTERS ASSOCIATED WITH PORTD

Name	Bit 7	Bit 6	Bit 5	Bit 4	Bit 3	Bit 2	Bit 1	Bit 0	Value on POR, BOR	Value on all other Resets
PORTD	RD7	RD6	RD5	RD4	RD3	RD2	RD1	RD0	xxxx xxxx	uuuu uuuu
LATD	LATD Data Latch Register								xxxx xxxx	uuuu uuuu
TRISD	PORTD Data Direction Register								1111 1111	1111 1111
TRISE	IBF	OBF	IBOV	PSPMODE	—	PORTE Data Direction bits			0000 -111	0000 -111
CCP1CON	P1M1	P1M0	DC1B1	DC1B0	CCP1M3	CCP1M2	CCP1M1	CCP1M0	0000 0000	0000 0000

Legend: x = unknown, u = unchanged, - = unimplemented, read as '0'. Shaded cells are not used by PORTD.

© 2007 Microchip Technology Inc.

10.5 PORTE, TRISE and LATE Registers

PORTE is available only in PIC18F4X20 devices. PIC18F2X20 devices always will read back 0x00 from PORTE.

For PIC18F4X20 devices, PORTE is a 4-bit wide port. Three pins (RE0/AN5/$\overline{RD}$, RE1/AN6/$\overline{WR}$ and RE2/AN7/$\overline{CS}$) are individually configurable as inputs or outputs. These pins have Schmitt Trigger input buffers. When selected as an analog input, these pins will read as '0's.

The corresponding Data Direction register is TRISE. Setting a TRISE bit (= 1) will make the corresponding PORTE pin an input (i.e., put the corresponding output driver in a high-impedance mode). Clearing a TRISE bit (= 0) will make the corresponding PORTE pin an output (i.e., put the contents of the output latch on the selected pin).

TRISE controls the direction of the RE pins even when they are being used as analog inputs. The user must make sure to keep the pins configured as inputs when using them as analog inputs.

Note:	On a Power-on Reset, RE2:RE0 are configured as analog inputs.

The upper four bits of the TRISE register also control the operation of the Parallel Slave Port. Their operation is explained in Register 10-1.

The Data Latch register (LATE) is also memory mapped. Read-modify-write operations on the LATE register read and write the latched output value for PORTE.

The fourth pin of PORTE ($\overline{MCLR}$/VPP/RE3) is an input only pin. Its operation is controlled by the MCLRE Configuration bit in Configuration Register 3H (CONFIG3H<7>). When selected as a port pin (MCLRE = 0), it functions as a digital input only pin; as such, it does not have TRIS or LAT bits associated with its operation. Otherwise, it functions as the device's Master Clear input. In either configuration, RE3 also functions as the programming voltage input during programming.

Note:	On a Power-on Reset, RE3 is enabled as a digital input only if Master Clear functionality is disabled.

EXAMPLE 10-5: INITIALIZING PORTE

```
CLRF    PORTE   ; Initialize PORTE by
                ; clearing output
                ; data latches
CLRF    LATE    ; Alternate method
                ; to clear output
                ; data latches
MOVLW   0x0A    ; Configure A/D
MOVWF   ADCON1  ; for digital inputs
MOVLW   0x03    ; Value used to
                ; initialize data
                ; direction
MOVWF   TRISC   ; Set RE<0> as inputs
                ; RE<1> as outputs
                ; RE<2> as inputs
```

FIGURE 10-13: BLOCK DIAGRAM OF RE2:RE0 PINS

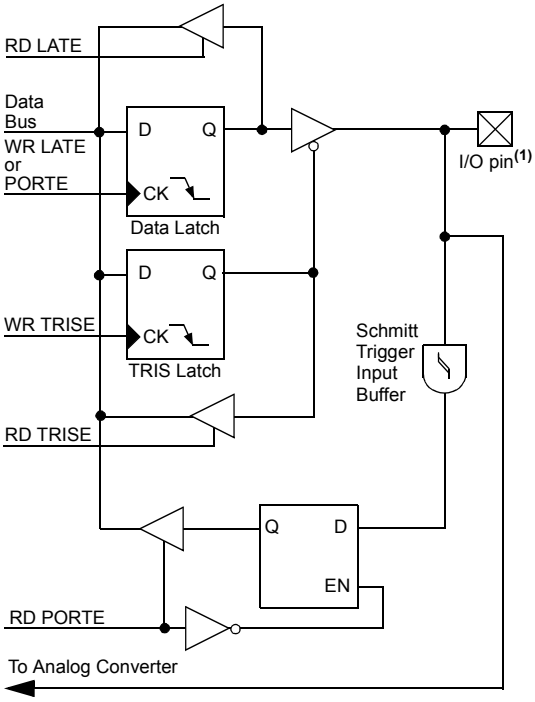

Note 1: I/O pins have diode protection to VDD and VSS.

FIGURE 10-14: BLOCK DIAGRAM OF MCLR/VPP/RE3 PIN

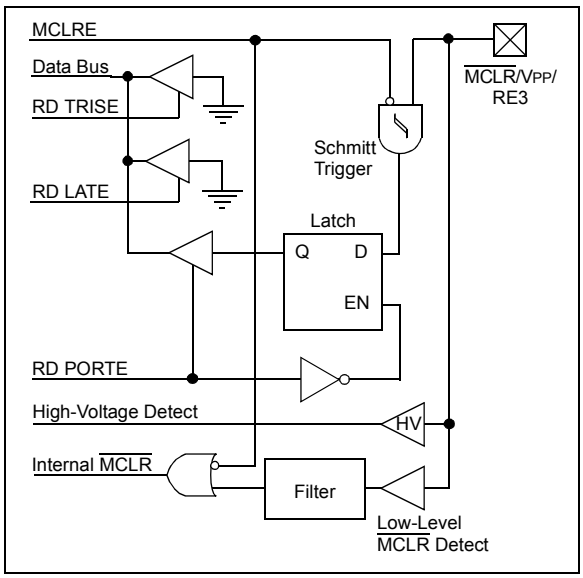

REGISTER 10-1: TRISE REGISTER

R-0	R-0	R/W-0	R/W-0	U-0	R/W-1	R/W-1	R/W-1
IBF	OBF	IBOV	PSPMODE	—	TRISE2	TRISE1	TRISE0
bit 7							bit 0

Legend:			
R = Readable bit	W = Writable bit	U = Unimplemented bit, read as '0'	
-n = Value at POR	'1' = Bit is set	'0' = Bit is cleared	x = Bit is unknown

bit 7 **IBF:** Input Buffer Full Status bit
1 = A word has been received and waiting to be read by the CPU
0 = No word has been received

bit 6 **OBF**: Output Buffer Full Status bit
1 = The output buffer still holds a previously written word
0 = The output buffer has been read

bit 5 **IBOV**: Input Buffer Overflow Detect bit (in Microprocessor mode)
1 = A write occurred when a previously input word has not been read (must be cleared in software)
0 = No overflow occurred

bit 4 **PSPMODE**: Parallel Slave Port Mode Select bit
1 = Parallel Slave Port mode
0 = General Purpose I/O mode

bit 3 **Unimplemented:** Read as '0'

bit 2 **TRISE2**: RE2 Direction Control bit
1 = Input
0 = Output

bit 1 **TRISE1**: RE1 Direction Control bit
1 = Input
0 = Output

bit 0 **TRISE0**: RE0 Direction Control bit
1 = Input
0 = Output

© 2007 Microchip Technology Inc.

TABLE 10-9: PORTE FUNCTIONS

Name	Bit#	Buffer Type	Function
RE0/AN5/$\overline{RD}$	bit 0	ST/TTL(1)	Input/output port pin, analog input or read control input in Parallel Slave Port mode. For $\overline{RD}$ (PSP Control mode): 1 = PSP is Idle 0 = Read operation. Reads PORTD register (if chip selected).
RE1/AN6/$\overline{WR}$	bit 1	ST/TTL(1)	Input/output port pin, analog input or write control input in Parallel Slave Port mode. For $\overline{WR}$ (PSP Control mode): 1 = PSP is Idle 0 = Write operation. Writes PORTD register (if chip selected).
RE2/AN7/$\overline{CS}$	bit 2	ST/TTL(1)	Input/output port pin, analog input or chip select control input in Parallel Slave Port mode. For $\overline{CS}$ (PSP Control mode): 1 = PSP is Idle 0 = External device is selected
$\overline{MCLR}$/VPP/RE3(2)	bit 3	ST	Input only port pin or programming voltage input (if $\overline{MCLR}$ is disabled); Master Clear input or programming voltage input (if $\overline{MCLR}$ is enabled).

Legend: ST = Schmitt Trigger input, TTL = TTL input

Note 1: Input buffers are Schmitt Triggers when in I/O mode and TTL buffers when in Parallel Slave Port mode.

2: The RE3 port bit is available as an input-only pin only in 40-pin devices and when Master Clear functionality is disabled (CONFIG3H<7>=0).

TABLE 10-10: SUMMARY OF REGISTERS ASSOCIATED WITH PORTE

Name	Bit 7	Bit 6	Bit 5	Bit 4	Bit 3	Bit 2	Bit 1	Bit 0	Value on POR, BOR	Value on all other Resets
PORTE	—	—	—	—	RE3(1)	RE2	RE1	RE0	---- qxxx	---- quuu
LATE	—	—	—	—	—	LATE Data Latch Register			---- -xxx	---- -uuu
TRISE	IBF	OBF	IBOV	PSPMODE	—	PORTE Data Direction bits			0000 -111	0000 -111
ADCON1	—	—	VCFG1	VCFG0	PCFG3	PCFG2	PCFG1	PCFG0	--00 0000	--00 0000

Legend: x = unknown, u = unchanged, - = unimplemented, read as '0', q = value depends on condition.
Shaded cells are not used by PORTE.

Note 1: The RE3 port bit is available as an input-only pin only in 40-pin devices and when Master Clear functionality is disabled (CONFIG3H<7>=0).

10.6 Parallel Slave Port

Note:	The Parallel Slave Port is only available on PIC18F4X20 devices.

In addition to its function as a general I/O port, PORTD can also operate as an 8-bit wide Parallel Slave Port (PSP) or microprocessor port. PSP operation is controlled by the 4 upper bits of the TRISE register (Register 10-1). Setting control bit, PSPMODE (TRISE<4>), enables PSP operation, as long as the Enhanced CCP module is not operating in dual output or quad output PWM mode. In Slave mode, the port is asynchronously readable and writable by the external world.

The PSP can directly interface to an 8-bit microprocessor data bus. The external microprocessor can read or write the PORTD latch as an 8-bit latch. Setting the control bit, PSPMODE, enables the PORTE I/O pins to become control inputs for the microprocessor port. When set, port pin RE0 is the $\overline{RD}$ input, RE1 is the $\overline{WR}$ input and RE2 is the $\overline{CS}$ (Chip Select) input. For this functionality, the corresponding data direction bits of the TRISE register (TRISE<2:0>) must be configured as inputs (set). The A/D port configuration bits PFCG3:PFCG0 (ADCON1<3:0>) must also be set to '1010'.

A write to the PSP occurs when both the $\overline{CS}$ and $\overline{WR}$ lines are first detected low and ends when either are detected high. The PSPIF and IBF flag bits are both set when the write ends.

A read from the PSP occurs when both the $\overline{CS}$ and $\overline{RD}$ lines are first detected low. The data in PORTD is read out and the OBF bit is set. If the user writes new data to PORTD to set OBF, the data is immediately read out; however, the OBF bit is not set.

When either the $\overline{CS}$ or $\overline{RD}$ lines are detected high, the PORTD pins return to the input state and the PSPIF bit is set. User applications should wait for PSPIF to be set before servicing the PSP; when this happens, the IBF and OBF bits can be polled and the appropriate action taken.

The timing for the control signals in Write and Read modes is shown in Figure 10-16 and Figure 10-17, respectively.

FIGURE 10-15: PORTD AND PORTE BLOCK DIAGRAM (PARALLEL SLAVE PORT)

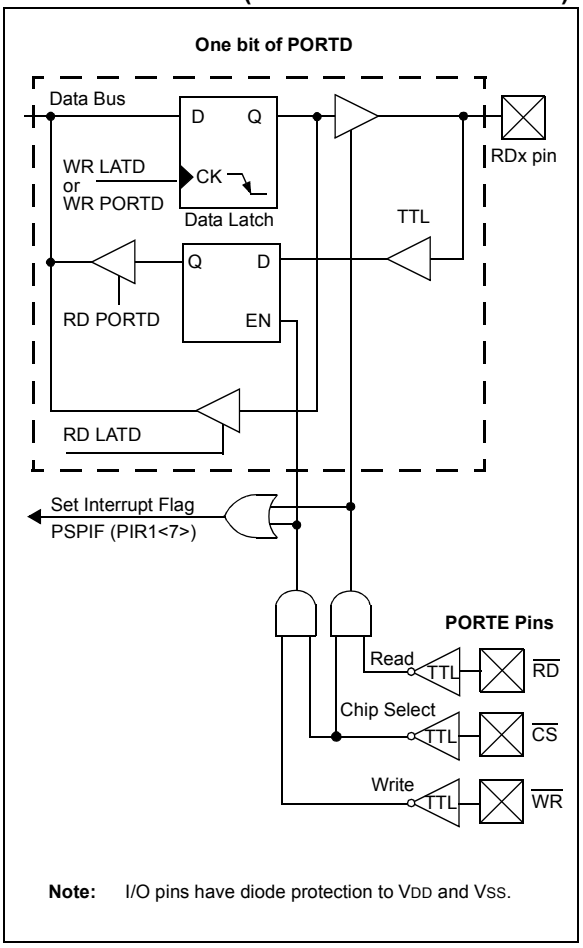

Note: I/O pins have diode protection to VDD and VSS.

© 2007 Microchip Technology Inc.

FIGURE 10-16: PARALLEL SLAVE PORT WRITE WAVEFORMS

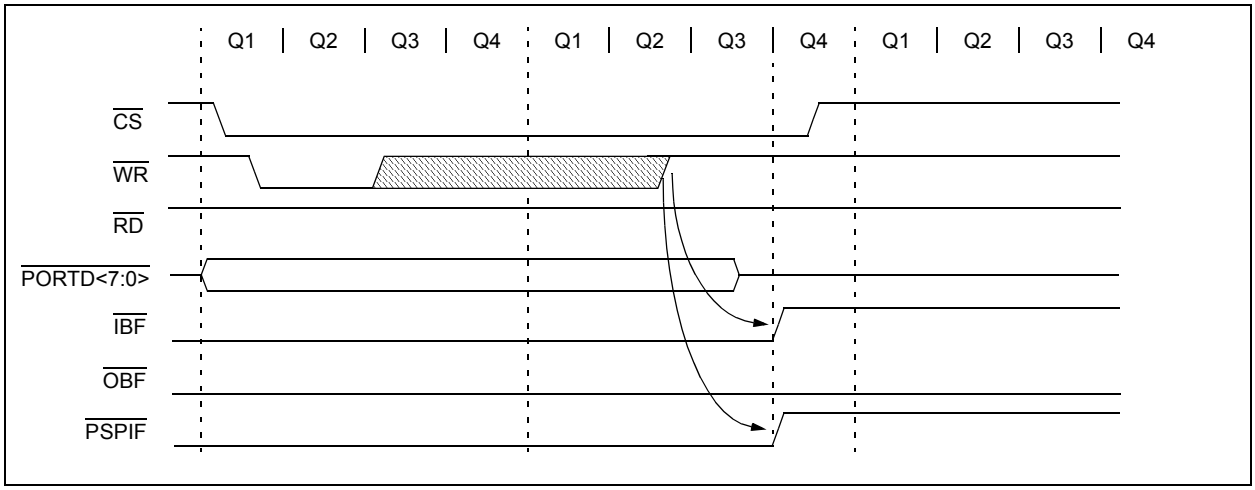

FIGURE 10-17: PARALLEL SLAVE PORT READ WAVEFORMS

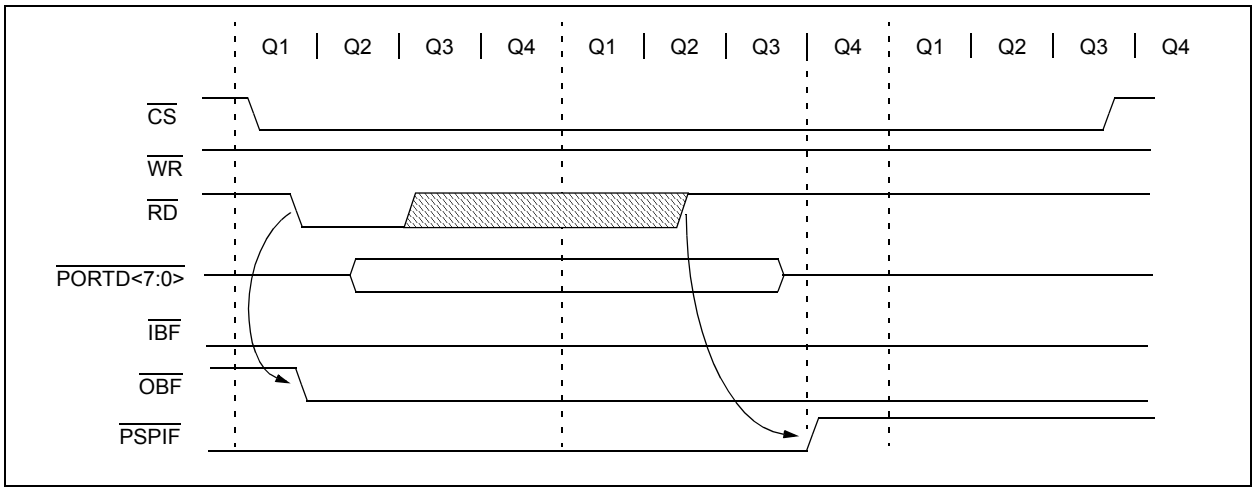

TABLE 10-11: REGISTERS ASSOCIATED WITH PARALLEL SLAVE PORT

Name	Bit 7	Bit 6	Bit 5	Bit 4	Bit 3	Bit 2	Bit 1	Bit 0	Value on POR, BOR	Value on all other Resets
PORTD	Port Data Latch when written; Port pins when read								xxxx xxxx	uuuu uuuu
LATD	LATD Data Latch bits								xxxx xxxx	uuuu uuuu
TRISD	PORTD Data Direction bits								1111 1111	1111 1111
PORTE	—	—	—	—	RE3	RE2	RE1	RE0	---- qxxx	---- quuu
LATE	—	—	—	—	—	LATE Data Latch bits			---- -xxx	---- -uuu
TRISE	IBF	OBF	IBOV	PSPMODE	—	PORTE Data Direction bits			0000 -111	0000 -111
INTCON	GIE/ GIEH	PEIE/ GIEL	TMR0IF	INT0IE	RBIE	TMR0IF	INT0IF	RBIF	0000 000x	0000 000u
PIR1	PSPIF	ADIF	RCIF	TXIF	SSPIF	CCP1IF	TMR2IF	TMR1IF	0000 0000	0000 0000
PIE1	PSPIE	ADIE	RCIE	TXIE	SSPIE	CCP1IE	TMR2IE	TMR1IE	0000 0000	0000 0000
IPR1	PSPIP	ADIP	RCIP	TXIP	SSPIP	CCP1IP	TMR2IP	TMR1IP	1111 1111	1111 1111
ADCON1	—	—	VCFG1	VCFG0	PCFG3	PCFG2	PCFG1	PCFG0	--00 0000	--00 0000

Legend: x = unknown, u = unchanged, - = unimplemented, read as '0'. Shaded cells are not used by the Parallel Slave Port.

NOTES:

© 2007 Microchip Technology Inc.

11.0 TIMER0 MODULE

The Timer0 module has the following features:

- Software selectable as an 8-bit or 16-bit timer/counter
- Readable and writable
- Dedicated 8-bit software programmable prescaler
- Clock source selectable to be external or internal
- Interrupt-on-overflow from FFh to 00h in 8-bit mode and FFFFh to 0000h in 16-bit mode
- Edge select for external clock

Figure 11-1 shows a simplified block diagram of the Timer0 module in 8-bit mode and Figure 11-2 shows a simplified block diagram of the Timer0 module in 16-bit mode.

The T0CON register (Register 11-1) is a readable and writable register that controls all the aspects of Timer0, including the prescale selection.

REGISTER 11-1: T0CON: TIMER0 CONTROL REGISTER

R/W-1	R/W-1	R/W-1	R/W-1	R/W-1	R/W-1	R/W-1	R/W-1
TMR0ON	T08BIT	T0CS	T0SE	PSA	T0PS2	T0PS1	T0PS0
bit 7							bit 0

Legend:			
R = Readable bit	W = Writable bit	U = Unimplemented bit, read as ‘0’	
-n = Value at POR	‘1’ = Bit is set	‘0’ = Bit is cleared	x = Bit is unknown

bit 7 **TMR0ON:** Timer0 On/Off Control bit
1 = Enables Timer0
0 = Stops Timer0

bit 6 **T08BIT**: Timer0 8-Bit/16-Bit Control bit
1 = Timer0 is configured as an 8-bit timer/counter
0 = Timer0 is configured as a 16-bit timer/counter

bit 5 **T0CS**: Timer0 Clock Source Select bit
1 = Transition on T0CKI pin
0 = Internal instruction cycle clock (CLKO)

bit 4 **T0SE**: Timer0 Source Edge Select bit
1 = Increment on high-to-low transition on T0CKI pin
0 = Increment on low-to-high transition on T0CKI pin

bit 3 **PSA**: Timer0 Prescaler Assignment bit
1 = TImer0 prescaler is not assigned. Timer0 clock input bypasses prescaler.
0 = Timer0 prescaler is assigned. Timer0 clock input comes from prescaler output.

bit 2-0 **T0PS2:T0PS0**: Timer0 Prescaler Select bits
111 = 1:256 Prescale value
110 = 1:128 Prescale value
101 = 1:64 Prescale value
100 = 1:32 Prescale value
011 = 1:16 Prescale value
010 = 1:8 Prescale value
001 = 1:4 Prescale value
000 = 1:2 Prescale value

FIGURE 11-1: TIMER0 BLOCK DIAGRAM IN 8-BIT MODE

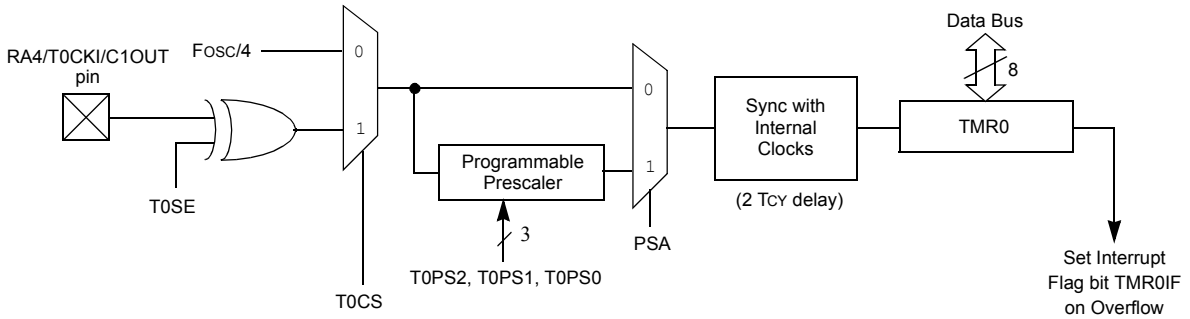

Note: Upon Reset, Timer0 is enabled in 8-bit mode with clock input from T0CKI maximum prescale.

FIGURE 11-2: TIMER0 BLOCK DIAGRAM IN 16-BIT MODE

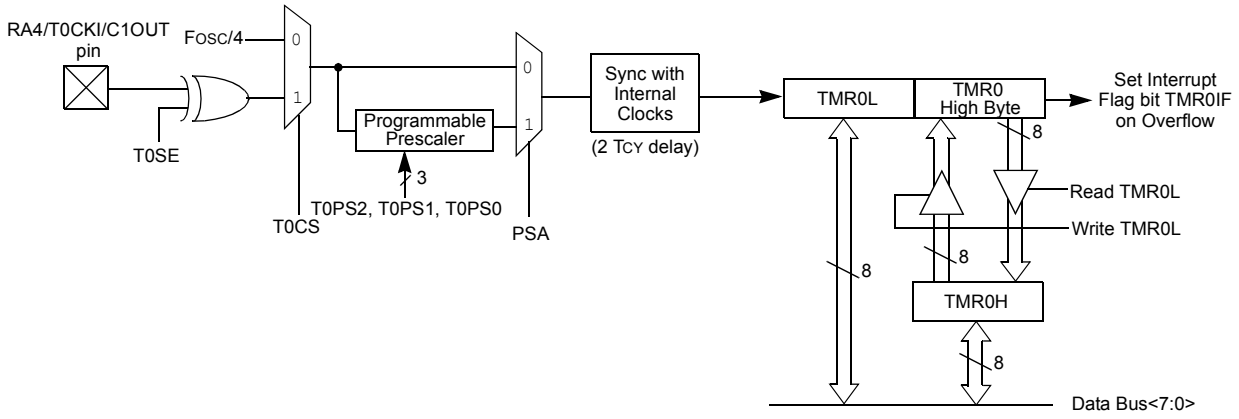

Note: Upon Reset, Timer0 is enabled in 8-bit mode with clock input from T0CKI maximum prescale.

© 2007 Microchip Technology Inc.

11.1 Timer0 Operation

Timer0 can operate as a timer or as a counter.

Timer mode is selected by clearing the T0CS bit. In Timer mode, the Timer0 module will increment every instruction cycle (without prescaler). If the TMR0 register is written, the increment is inhibited for the following two instruction cycles. The user can work around this by writing an adjusted value to the TMR0 register.

Counter mode is selected by setting the T0CS bit. In Counter mode, Timer0 will increment, either on every rising or falling edge of pin RA4/T0CKI/C1OUT. The incrementing edge is determined by the Timer0 Source Edge Select bit (T0SE). Clearing the T0SE bit selects the rising edge.

When an external clock input is used for Timer0, it must meet certain requirements. The requirements ensure the external clock can be synchronized with the internal phase clock (TOSC). Also, there is a delay in the actual incrementing of Timer0 after synchronization.

11.2 Prescaler

An 8-bit counter is available as a prescaler for the Timer0 module. The prescaler is not readable or writable.

The PSA and T0PS2:T0PS0 bits determine the prescaler assignment and prescale ratio.

Clearing bit PSA will assign the prescaler to the Timer0 module. When the prescaler is assigned to the Timer0 module, prescale values of 1:2, 1:4,..., 1:256 are selectable.

When assigned to the Timer0 module, all instructions writing to the TMR0 register (e.g., `CLRF TMR0`, `MOVWF TMR0`, `BSF TMR0, x`....etc.) will clear the prescaler count.

Note:	Writing to TMR0 when the prescaler is assigned to Timer0 will clear the prescaler count but will not change the prescaler assignment.

11.2.1 SWITCHING PRESCALER ASSIGNMENT

The prescaler assignment is fully under software control (i.e., it can be changed “on-the-fly” during program execution).

11.3 Timer0 Interrupt

The TMR0 interrupt is generated when the TMR0 register overflows from FFh to 00h in 8-bit mode, or FFFFh to 0000h in 16-bit mode. This overflow sets the TMR0IF bit. The interrupt can be masked by clearing the TMR0IE bit. The TMR0IF bit must be cleared in software by the Timer0 module Interrupt Service Routine before re-enabling this interrupt. The TMR0 interrupt cannot awaken the processor from Sleep mode, since the timer requires clock cycles, even when T0CS is set.

11.4 16-Bit Mode Timer Reads and Writes

TMR0H is not the high byte of the timer/counter in 16-bit mode but is actually a buffered version of the high byte of Timer0 (refer to Figure 11-2). The high byte of the Timer0 counter/timer is not directly readable nor writable. TMR0H is updated with the contents of the high byte of Timer0 during a read of TMR0L. This provides the ability to read all 16 bits of Timer0, without having to verify that the read of the high and low byte were valid, due to a rollover between successive reads of the high and low byte.

A write to the high byte of Timer0 must also take place through the TMR0H Buffer register. Timer0 high byte is updated with the contents of TMR0H when a write occurs to TMR0L. This allows all 16 bits of Timer0 to be updated at once.

TABLE 11-1: REGISTERS ASSOCIATED WITH TIMER0

Name	Bit 7	Bit 6	Bit 5	Bit 4	Bit 3	Bit 2	Bit 1	Bit 0	Value on POR, BOR	Value on all other Resets
TMR0L	Timer0 Low Byte Register								xxxx xxxx	uuuu uuuu
TMR0H	Timer0 High Byte Register								0000 0000	0000 0000
INTCON	GIE/GIEH	PEIE/GIEL	TMR0IE	INT0IE	RBIE	TMR0IF	INT0IF	RBIF	0000 000x	0000 000u
T0CON	TMR0ON	T08BIT	T0CS	T0SE	PSA	T0PS2	T0PS1	T0PS0	1111 1111	1111 1111
TRISA	RA7(1)	RA6(1)	PORTA Data Direction Register						1111 1111	1111 1111

Legend: x = unknown, u = unchanged, – = unimplemented locations read as ‘0’. Shaded cells are not used by Timer0.

Note 1: RA6 and RA7 are enabled as I/O pins depending on the oscillator mode selected in Configuration Word 1H.

NOTES:

© 2007 Microchip Technology Inc.

12.0 TIMER1 MODULE

The Timer1 module timer/counter has the following features:

- 16-bit timer/counter (two 8-bit registers: TMR1H and TMR1L)
- Readable and writable (both registers)
- Internal or external clock select
- Interrupt-on-overflow from FFFFh to 0000h
- Reset from CCP module Special Event Trigger
- Status of system clock operation

Figure 12-1 is a simplified block diagram of the Timer1 module.

Register 12-1 details the Timer1 Control register. This register controls the operating mode of the Timer1 module and contains the Timer1 Oscillator Enable bit (T1OSCEN). Timer1 can be enabled or disabled by setting or clearing control bit, TMR1ON (T1CON<0>).

The Timer1 oscillator can be used as a secondary clock source in power-managed modes. When the T1RUN bit is set, the Timer1 oscillator is providing the system clock. If the Fail-Safe Clock Monitor is enabled and the Timer1 oscillator fails while providing the system clock, polling the T1RUN bit will indicate whether the clock is being provided by the Timer1 oscillator or another source.

Timer1 can also be used to provide Real-Time Clock (RTC) functionality to applications with only a minimal addition of external components and code overhead.

REGISTER 12-1: T1CON: TIMER1 CONTROL REGISTER

R/W-0	R-0	R/W-0	R/W-0	R/W-0	R/W-0	R/W-0	R/W-0
RD16	T1RUN	T1CKPS1	T1CKPS0	T1OSCEN	$\overline{\text{T1SYNC}}$	TMR1CS	TMR1ON
bit 7							bit 0

Legend:			
R = Readable bit	W = Writable bit	U = Unimplemented bit, read as '0'	
-n = Value at POR	'1' = Bit is set	'0' = Bit is cleared	x = Bit is unknown

bit 7 **RD16:** 16-Bit Read/Write Mode Enable bit
1 = Enables register read/write of Timer1 in one 16-bit operation
0 = Enables register read/write of Timer1 in two 8-bit operations

bit 6 **T1RUN:** Timer1 System Clock Status bit
1 = Device clock is derived from Timer1 oscillator
0 = Device clock is derived from another source

bit 5-4 **T1CKPS1:T1CKPS0:** Timer1 Input Clock Prescale Select bits
11 = 1:8 Prescale value
10 = 1:4 Prescale value
01 = 1:2 Prescale value
00 = 1:1 Prescale value

bit 3 **T1OSCEN:** Timer1 Oscillator Enable bit
1 = Timer1 oscillator is enabled
0 = Timer1 oscillator is shut off
The oscillator inverter and feedback resistor are turned off to eliminate power drain.

bit 2 **$\overline{\text{T1SYNC}}$:** Timer1 External Clock Input Synchronization Select bit
When TMR1CS = 1 (External Clock):
1 = Do not synchronize external clock input
0 = Synchronize external clock input
When TMR1CS = 0 (Internal Clock):
This bit is ignored. Timer1 uses the internal clock when TMR1CS = 0.

bit 1 **TMR1CS:** Timer1 Clock Source Select bit
1 = External clock from RC0/T1OSO/T13CKI pin (on the rising edge)
0 = Internal clock (FOSC/4)

bit 0 **TMR1ON:** Timer1 On bit
1 = Enables Timer1
0 = Stops Timer1

12.1 Timer1 Operation

Timer1 can operate in one of these modes:

- As a timer
- As a synchronous counter
- As an asynchronous counter

The operating mode is determined by the Clock Select bit, TMR1CS (T1CON<1>).

When TMR1CS = 0, Timer1 increments every instruction cycle. When TMR1CS = 1, Timer1 increments on every rising edge of the external clock input, or the Timer1 oscillator, if enabled.

When the Timer1 oscillator is enabled (T1OSCEN is set), the RC1/T1OSI/CCP2 and RC0/T1OSO/T1CKI pins become inputs. The TRISC1:TRISC0 values are ignored and the pins read as '0'.

Timer1 also has an internal "Reset input". This Reset can be generated by the CCP module (see **Section 15.4.4 "Special Event Trigger"**).

FIGURE 12-1: TIMER1 BLOCK DIAGRAM

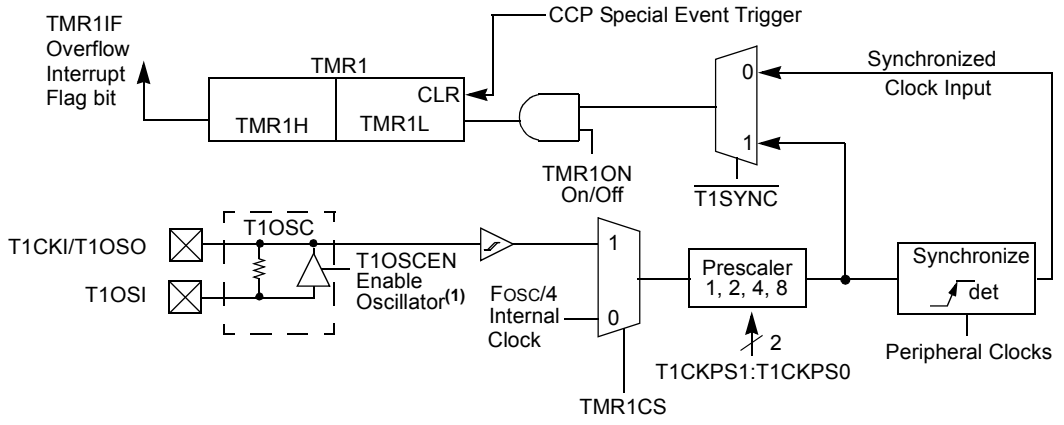

Note 1: When enable bit T1OSCEN is cleared, the inverter and feedback resistor are turned off. This eliminates power drain.

FIGURE 12-2: TIMER1 BLOCK DIAGRAM: 16-BIT READ/WRITE MODE

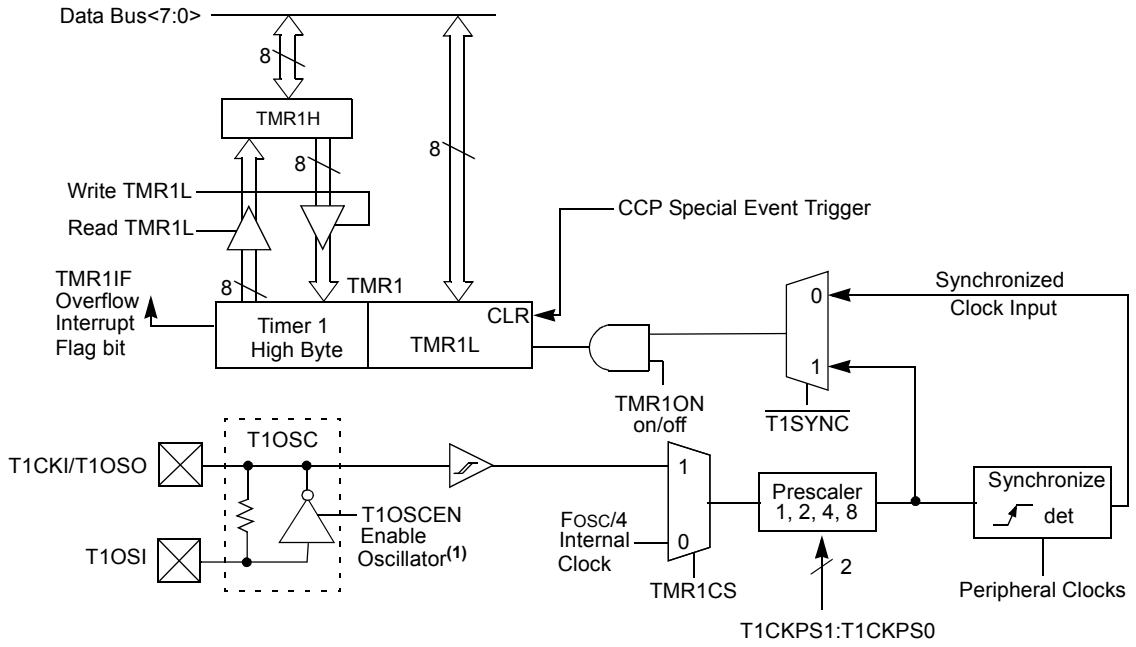

Note 1: When enable bit T1OSCEN is cleared, the inverter and feedback resistor are turned off. This eliminates power drain.

© 2007 Microchip Technology Inc.

12.2 Timer1 Oscillator

A crystal oscillator circuit is built-in between pins, T1OSI (input) and T1OSO (amplifier output). It is enabled by setting control bit, T1OSCEN (T1CON<3>). The oscillator is a low-power oscillator rated for 32 kHz crystals. It will continue to run during all power-managed modes. The circuit for a typical LP oscillator is shown in Figure 12-3. Table 12-1 shows the capacitor selection for the Timer1 oscillator.

The user must provide a software time delay to ensure proper start-up of the Timer1 oscillator.

FIGURE 12-3: EXTERNAL COMPONENTS FOR THE TIMER1 LP OSCILLATOR

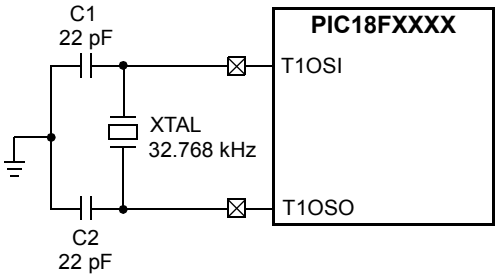

Note: See the Notes with Table 12-1 for additional information about capacitor selection.

TABLE 12-1: CAPACITOR SELECTION FOR THE TIMER OSCILLATOR(2,3,4)

Osc Type	Freq	C1	C2
LP	32 kHz	22 pF(1)	22 pF(1)

Note 1: Microchip suggests this value as a starting point in validating the oscillator circuit.

2: Higher capacitance increases the stability of the oscillator but also increases the start-up time.

3: Since each resonator/crystal has its own characteristics, the user should consult the resonator/crystal manufacturer for appropriate values of external components.

4: Capacitor values are for design guidance only.

12.3 Timer1 Oscillator Layout Considerations

The Timer1 oscillator circuit draws very little power during operation. Due to the low-power nature of the oscillator, it may also be sensitive to rapidly changing signals in close proximity.

The oscillator circuit, shown in Figure 12-3, should be located as close as possible to the microcontroller. There should be no circuits passing within the oscillator circuit boundaries other than VSS or VDD.

If a high-speed circuit must be located near the oscillator (such as the CCP1 pin in output compare or PWM mode, or the primary oscillator using the OSC2 pin), a grounded guard ring around the oscillator circuit, as shown in Figure 12-4, may be helpful when used on a single-sided PCB or in addition to a ground plane.

FIGURE 12-4: OSCILLATOR CIRCUIT WITH GROUNDED GUARD RING

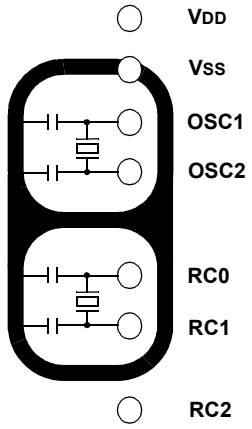

Note: Not drawn to scale.

12.4 Timer1 Interrupt

The TMR1 register pair (TMR1H:TMR1L) increments from 0000h to FFFFh and rolls over to 0000h. The Timer1 interrupt, if enabled, is generated on overflow which is latched in interrupt flag bit, TMR1IF (PIR1<0>). This interrupt can be enabled/disabled by setting/clearing Timer1 interrupt enable bit, TMR1IE (PIE1<0>).

12.5 Resetting Timer1 Using a CCP Trigger Output

If the CCP module is configured in Compare mode to generate a "Special Event Trigger" (CCP1M3:CCP1M0 = 1011), this signal will reset Timer1 and start an A/D conversion if the A/D module is enabled (see **Section 15.4.4 "Special Event Trigger"** for more information).

Note:	The Special Event Triggers from the CCP1 module will not set interrupt flag bit, TMR1IF (PIR1<0>).

Timer1 must be configured for either Timer or Synchronized Counter mode to take advantage of this feature. If Timer1 is running in Asynchronous Counter mode, this Reset operation may not work.

In the event that a write to Timer1 coincides with a Special Event Trigger from CCP1, the write will take precedence.

In this mode of operation, the CCPR1H:CCPR1L register pair effectively becomes the period register for Timer1.

12.6 Timer1 16-Bit Read/Write Mode

Timer1 can be configured for 16-bit reads and writes (see Figure 12-2). When the RD16 control bit (T1CON<7>) is set, the address for TMR1H is mapped to a buffer register for the high byte of Timer1. A read from TMR1L will load the contents of the high byte of Timer1 into the Timer1 high byte buffer. This provides the user with the ability to accurately read all 16 bits of Timer1 without having to determine whether a read of the high byte, followed by a read of the low byte, is valid due to a rollover between reads.

A write to the high byte of Timer1 must also take place through the TMR1H Buffer register. Timer1 high byte is updated with the contents of TMR1H when a write occurs to TMR1L. This allows a user to write all 16 bits to both the high and low bytes of Timer1 at once.

The high byte of Timer1 is not directly readable or writable in this mode. All reads and writes must take place through the Timer1 High Byte Buffer register. Writes to TMR1H do not clear the Timer1 prescaler. The prescaler is only cleared on writes to TMR1L.

12.7 Using Timer1 as a Real-Time Clock

Adding an external LP oscillator to Timer1 (such as the one described in **Section 12.2 "Timer1 Oscillator"** above), gives users the option to include RTC functionality to their applications. This is accomplished with an inexpensive watch crystal to provide an accurate time base and several lines of application code to calculate the time. When operating in Sleep mode and using a battery or supercapacitor as a power source, it can completely eliminate the need for a separate RTC device and battery backup.

The application code routine, `RTCisr`, shown in Example 12-1, demonstrates a simple method to increment a counter at one-second intervals using an Interrupt Service Routine. Incrementing the TMR1 register pair to overflow, triggers the interrupt and calls the routine, which increments the seconds counter by one; additional counters for minutes and hours are incremented as the previous counter overflow.

Since the register pair is 16 bits wide, counting up to overflow the register directly from a 32.768 kHz clock would take 2 seconds. To force the overflow at the required one-second intervals, it is necessary to preload it; the simplest method is to set the MSbit of TMR1H with a `BSF` instruction. Note that the TMR1L register is never preloaded or altered; doing so may introduce cumulative error over many cycles.

For this method to be accurate, Timer1 must operate in Asynchronous mode and the Timer1 overflow interrupt must be enabled (PIE1<0> = 1) as shown in the routine, `RTCinit`. The Timer1 oscillator must also be enabled and running at all times.

© 2007 Microchip Technology Inc.

EXAMPLE 12-1: IMPLEMENTING A REAL-TIME CLOCK USING A TIMER1 INTERRUPT SERVICE

```
RTCinit
            MOVLW   0x80            ; Preload TMR1 register pair
            MOVWF   TMR1H           ; for 1 second overflow
            CLRF    TMR1L
            MOVLW   b'00001111'     ; Configure for external clock,
            MOVWF   T1OSC           ; Asynchronous operation, external oscillator
            CLRF    secs            ; Initialize timekeeping registers
            CLRF    mins            ;
            MOVLW   .12
            MOVWF   hours
            BSF     PIE1, TMR1IE    ; Enable Timer1 interrupt
            RETURN
RTCisr
            BSF     TMR1H,7         ; Preload for 1 sec overflow
            BCF     PIR1,TMR1IF     ; Clear interrupt flag
            INCF    secs,F          ; Increment seconds
            MOVLW   .59             ; 60 seconds elapsed?
            CPFSGT  secs
            RETURN                  ; No, done
            CLRF    secs            ; Clear seconds
            INCF    mins,F          ; Increment minutes
            MOVLW   .59             ; 60 minutes elapsed?
            CPFSGT  mins
            RETURN                  ; No, done
            CLRF    mins            ; clear minutes
            INCF    hours,F         ; Increment hours
            MOVLW   .23             ; 24 hours elapsed?
            CPFSGT  hours
            RETURN                  ; No, done
            MOVLW   .01             ; Reset hours to 1
            MOVWF   hours
            RETURN                  ; Done
```

TABLE 12-2: REGISTERS ASSOCIATED WITH TIMER1 AS A TIMER/COUNTER

Name	Bit 7	Bit 6	Bit 5	Bit 4	Bit 3	Bit 2	Bit 1	Bit 0	Value on POR, BOR	Value on all other Resets
INTCON	GIE/GIEH	PEIE/GIEL	TMR0IE	INT0IE	RBIE	TMR0IF	INT0IF	RBIF	0000 000x	0000 000u
PIR1	PSPIF(1)	ADIF	RCIF	TXIF	SSPIF	CCP1IF	TMR2IF	TMR1IF	0000 0000	0000 0000
PIE1	PSPIE(1)	ADIE	RCIE	TXIE	SSPIE	CCP1IE	TMR2IE	TMR1IE	0000 0000	0000 0000
IPR1	PSPIP(1)	ADIP	RCIP	TXIP	SSPIP	CCP1IP	TMR2IP	TMR1IP	1111 1111	1111 1111
TMR1L	Timer1 Low Byte Register								xxxx xxxx	uuuu uuuu
TMR1H	Timer1 High Byte Register								xxxx xxxx	uuuu uuuu
T1CON	RD16	T1RUN	T1CKPS1	T1CKPS0	T1OSCEN	T1SYNC	TMR1CS	TMR1ON	0000 0000	u0uu uuuu

Legend: x = unknown, u = unchanged, – = unimplemented, read as '0'. Shaded cells are not used by the Timer1 module.
Note 1: The PSPIF, PSPIE and PSPIP bits are reserved on the PIC18F2X20 devices; always maintain these bits clear.

NOTES:

© 2007 Microchip Technology Inc.

13.0 TIMER2 MODULE

The Timer2 module timer has the following features:

- 8-bit Timer register (TMR2)
- 8-bit Period register (PR2)
- Readable and writable (both registers)
- Software programmable prescaler (1:1, 1:4, 1:16)
- Software programmable postscaler (1:1 to 1:16)
- Interrupt on TMR2 match with PR2
- MSSP module optional use of TMR2 output to generate clock shift

Timer2 has a control register shown in Register 13-1. TMR2 can be shut-off by clearing control bit, TMR2ON (T2CON<2>), to minimize power consumption. Figure 13-1 is a simplified block diagram of the Timer2 module. Register 13-1 shows the Timer2 Control register. The prescaler and postscaler selection of Timer2 are controlled by this register.

13.1 Timer2 Operation

Timer2 can be used as the PWM time base for the PWM mode of the CCP module. The TMR2 register is readable and writable and is cleared on any device Reset. The input clock (FOSC/4) has a prescale option of 1:1, 1:4 or 1:16, selected by control bits, T2CKPS1:T2CKPS0 (T2CON<1:0>). The match output of TMR2 goes through a 4-bit postscaler (which gives a 1:1 to 1:16 scaling inclusive) to generate a TMR2 interrupt (latched in flag bit, TMR2IF (PIR1<1>)).

The prescaler and postscaler counters are cleared when any of the following occurs:

- A write to the TMR2 register
- A write to the T2CON register
- Any device Reset (Power-on Reset, $\overline{\text{MCLR}}$ Reset, Watchdog Timer Reset or Brown-out Reset)

TMR2 is not cleared when T2CON is written.

REGISTER 13-1: T2CON: TIMER2 CONTROL REGISTER

U-0	R/W-0	R/W-0	R/W-0	R/W-0	R/W-0	R/W-0	R/W-0
—	TOUTPS3	TOUTPS2	TOUTPS1	TOUTPS0	TMR2ON	T2CKPS1	T2CKPS0
bit 7							bit 0

Legend:			
R = Readable bit	W = Writable bit	U = Unimplemented bit, read as ‘0’	
-n = Value at POR	‘1’ = Bit is set	‘0’ = Bit is cleared	x = Bit is unknown

bit 7 **Unimplemented:** Read as ‘0’

bit 6-3 **TOUTPS3:TOUTPS0**: Timer2 Output Postscale Select bits
0000 = 1:1 Postscale
0001 = 1:2 Postscale
•
•
•
1111 = 1:16 Postscale

bit 2 **TMR2ON**: Timer2 On bit
1 = Timer2 is on
0 = Timer2 is off

bit 1-0 **T2CKPS1:T2CKPS0**: Timer2 Clock Prescale Select bits
00 = Prescaler is 1
01 = Prescaler is 4
1x = Prescaler is 16

13.2 Timer2 Interrupt

The Timer2 module has an 8-bit Period register, PR2. Timer2 increments from 00h until it matches PR2 and then resets to 00h on the next increment cycle. PR2 is a readable and writable register. The PR2 register is initialized to FFh upon Reset.

13.3 Output of TMR2

The output of TMR2 (before the postscaler) is fed to the Synchronous Serial Port module which optionally uses it to generate the shift clock.

FIGURE 13-1: TIMER2 BLOCK DIAGRAM

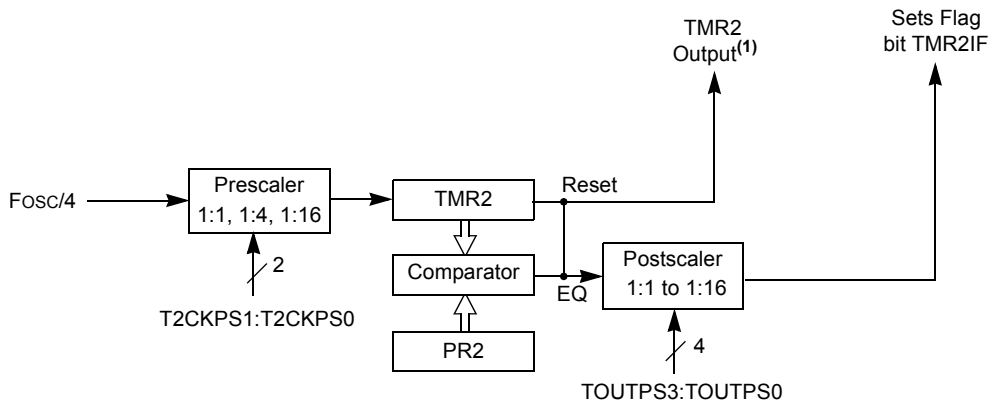

Note 1: TMR2 register output can be software selected by the MSSP module as a baud clock.

TABLE 13-1: REGISTERS ASSOCIATED WITH TIMER2 AS A TIMER/COUNTER

Name	Bit 7	Bit 6	Bit 5	Bit 4	Bit 3	Bit 2	Bit 1	Bit 0	Value on POR, BOR	Value on all other Resets
INTCON	GIE/GIEH	PEIE/GIEL	TMR0IE	INT0IE	RBIE	TMR0IF	INT0IF	RBIF	0000 000x	0000 000u
PIR1	PSPIF(1)	ADIF	RCIF	TXIF	SSPIF	CCP1IF	TMR2IF	TMR1IF	0000 0000	0000 0000
PIE1	PSPIE(1)	ADIE	RCIE	TXIE	SSPIE	CCP1IE	TMR2IE	TMR1IE	0000 0000	0000 0000
IPR1	PSPIP(1)	ADIP	RCIP	TXIP	SSPIP	CCP1IP	TMR2IP	TMR1IP	1111 1111	1111 1111
TMR2	Timer2 Module Register								0000 0000	0000 0000
T2CON	—	TOUTPS3	TOUTPS2	TOUTPS1	TOUTPS0	TMR2ON	T2CKPS1	T2CKPS0	-000 0000	-000 0000
PR2	Timer2 Period Register								1111 1111	1111 1111
OSCCON	IDLEN	IRCF2	IRCF1	IRCF0	OSTS	IOFS	SCS1	SCS0	0000 qq00	0000 qq00

Legend: x = unknown, u = unchanged, - = unimplemented, read as '0'. Shaded cells are not used by the Timer2 module.

Note 1: The PSPIF, PSPIE and PSPIP bits are reserved on the PIC18F2X2 devices; always maintain these bits clear.

© 2007 Microchip Technology Inc.

14.0 TIMER3 MODULE

The Timer3 module timer/counter has the following features:

- 16-bit timer/counter (two 8-bit registers: TMR3H and TMR3L)
- Readable and writable (both registers)
- Internal or external clock select
- Interrupt-on-overflow from FFFFh to 0000h
- Reset from CCP module trigger

Figure 14-1 is a simplified block diagram of the Timer3 module.

Register 14-1 shows the Timer3 Control register. This register controls the operating mode of the Timer3 module and sets the CCP clock source.

Register 12-1 shows the Timer1 Control register. This register controls the operating mode of the Timer1 module, as well as contains the Timer1 Oscillator Enable bit (T1OSCEN) which can be a clock source for Timer3.

REGISTER 14-1: T3CON: TIMER3 CONTROL REGISTER

R/W-0	R/W-0	R/W-0	R/W-0	R/W-0	R/W-0	R/W-0	R/W-0
RD16	T3CCP2	T3CKPS1	T3CKPS0	T3CCP1	$\overline{\text{T3SYNC}}$	TMR3CS	TMR3ON
bit 7							bit 0

Legend:			
R = Readable bit	W = Writable bit	U = Unimplemented bit, read as ‘0’	
-n = Value at POR	‘1’ = Bit is set	‘0’ = Bit is cleared	x = Bit is unknown

bit 7 **RD16:** 16-Bit Read/Write Mode Enable bit
1 = Enables register read/write of Timer3 in one 16-bit operation
0 = Enables register read/write of Timer3 in two 8-bit operations

bit 6, 3 **T3CCP2:T3CCP1:** Timer3 and Timer1 to CCPx Enable bits
1x = Timer3 is the capture/compare clock source for both CCP modules
01 = Timer3 is the capture/compare clock source for CCP2;
Timer1 is the capture/compare clock source for CCP1
00 = Timer1 is the capture/compare clock source for both CCP modules

bit 5-4 **T3CKPS1:T3CKPS0:** Timer3 Input Clock Prescale Select bits
11 = 1:8 Prescale value
10 = 1:4 Prescale value
01 = 1:2 Prescale value
00 = 1:1 Prescale value

bit 2 **$\overline{\text{T3SYNC}}$:** Timer3 External Clock Input Synchronization Control bit
(Not usable if the device clock comes from Timer1/Timer3.)
When TMR3CS = 1:
1 = Do not synchronize external clock input
0 = Synchronize external clock input
When TMR3CS = 0:
This bit is ignored. Timer3 uses the internal clock when TMR3CS = 0.

bit 1 **TMR3CS:** Timer3 Clock Source Select bit
1 = External clock input from Timer1 oscillator or T13CKI (on the rising edge after the first falling edge)
0 = Internal clock (FOSC/4)

bit 0 **TMR3ON:** Timer3 On bit
1 = Enables Timer3
0 = Stops Timer3

14.1 Timer3 Operation

Timer3 can operate in one of these modes:

- As a timer
- As a synchronous counter
- As an asynchronous counter

The operating mode is determined by the clock select bit, TMR3CS (T3CON<1>).

When TMR3CS = 0, Timer3 increments every instruction cycle. When TMR3CS = 1, Timer3 increments on every rising edge of the Timer1 external clock input or the Timer1 oscillator if enabled.

When the Timer1 oscillator is enabled (T1OSCEN is set), the RC1/T1OSI/CCP2 and RC0/T1OSO/T1CKI pins become inputs. That is, the TRISC1:TRISC0 value is ignored and the pins are read as '0'.

Timer3 also has an internal "Reset input". This Reset can be generated by the CCP module (see **Section 15.4.4 "Special Event Trigger"**).

FIGURE 14-1: TIMER3 BLOCK DIAGRAM

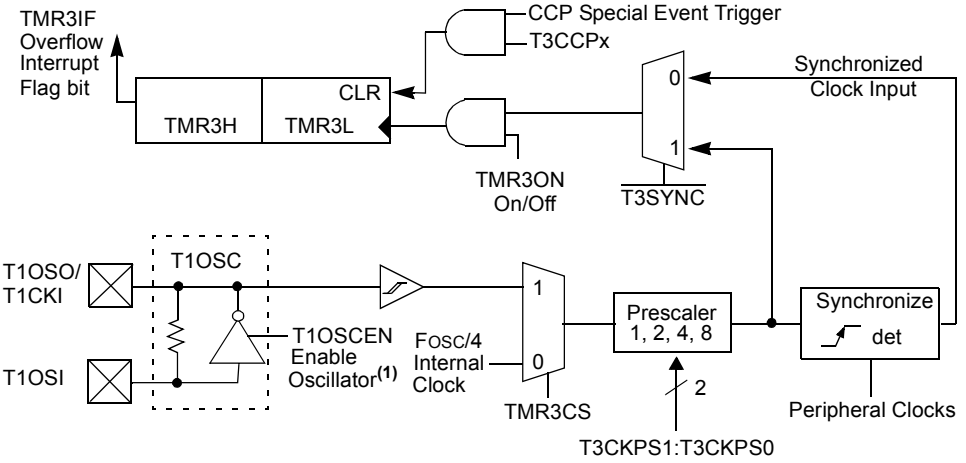

Note 1: When enable bit T1OSCEN is cleared, the inverter and feedback resistor are turned off. This eliminates power drain.

FIGURE 14-2: TIMER3 BLOCK DIAGRAM CONFIGURED IN 16-BIT READ/WRITE MODE

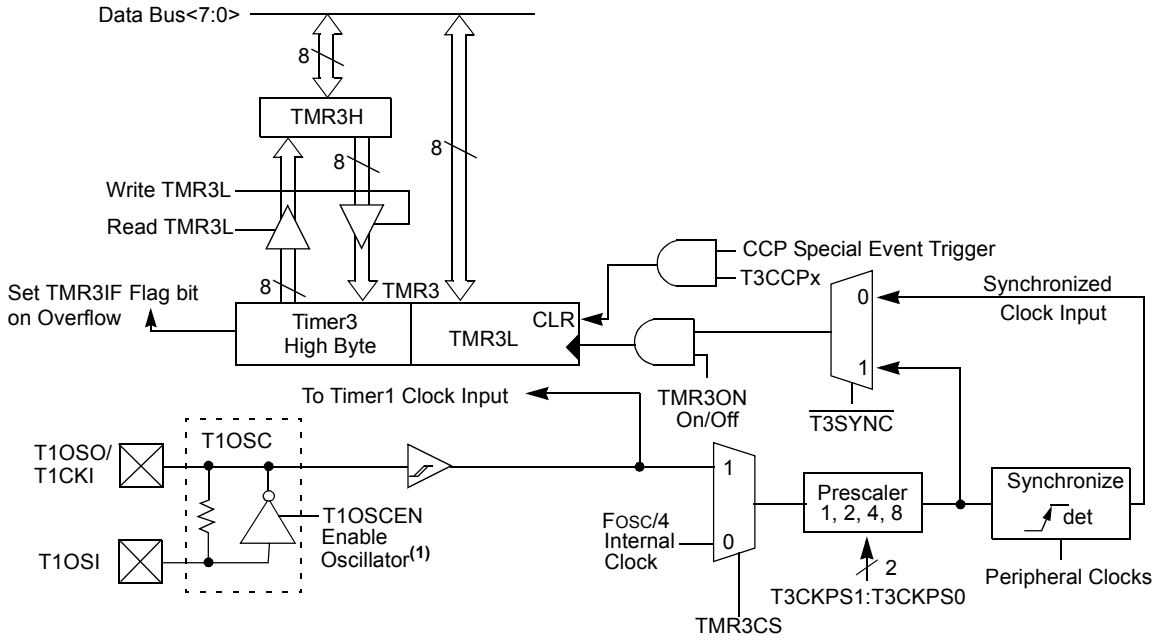

Note 1: When the T1OSCEN bit is cleared, the inverter and feedback resistor are turned off. This eliminates power drain.

© 2007 Microchip Technology Inc.

14.2 Timer1 Oscillator

The Timer1 oscillator may be used as the clock source for Timer3. The Timer1 oscillator is enabled by setting the T1OSCEN (T1CON<3>) bit. The oscillator is a low-power oscillator rated for 32 kHz crystals. See **Section 12.2 "Timer1 Oscillator"** for further details.

14.3 Timer3 Interrupt

The TMR3 register pair (TMR3H:TMR3L) increments from 0000h to FFFFh and rolls over to 0000h. The TMR3 interrupt, if enabled, is generated on overflow which is latched in interrupt flag bit, TMR3IF (PIR2<1>). This interrupt can be enabled/disabled by setting/clearing TMR3 Interrupt Enable bit, TMR3IE (PIE2<1>).

14.4 Resetting Timer3 Using a CCP Trigger Output

If the CCP module is configured in Compare mode to generate a "Special Event Trigger" (CCP1M3:CCP1M0 = 1011), this signal will reset Timer3. See **Section 15.4.4 "Special Event Trigger"** for more information.

Note:	The Special Event Triggers from the CCP module will not set interrupt flag bit, TMR3IF (PIR1<0>).

Timer3 must be configured for either Timer or Synchronized Counter mode to take advantage of this feature. If Timer3 is running in Asynchronous Counter mode, this Reset operation may not work. In the event that a write to Timer3 coincides with a Special Event Trigger from CCP1, the write will take precedence. In this mode of operation, the CCPR1H:CCPR1L register pair effectively becomes the period register for Timer3.

TABLE 14-1: REGISTERS ASSOCIATED WITH TIMER3 AS A TIMER/COUNTER

Name	Bit 7	Bit 6	Bit 5	Bit 4	Bit 3	Bit 2	Bit 1	Bit 0	Value on POR, BOR	Value on all other Resets
INTCON	GIE/ GIEH	PEIE/ GIEL	TMR0IE	INT0IE	RBIE	TMR0IF	INT0IF	RBIF	0000 000x	0000 000u
PIR2	OSCIF	CMIF	—	EEIF	BCLIF	LVDIF	TMR3IF	CCP2IF	00-0 0000	00-0 0000
PIE2	OSCIE	CMIE	—	EEIE	BCLIE	LVDIE	TMR3IE	CCP2IE	00-0 0000	00-0 0000
IPR2	OSCIP	CMIP	—	EEIP	BCLIP	LVDIP	TMR3IP	CCP2IP	11-1 1111	11-1 1111
TMR3L	Timer3 Low Byte Register								xxxx xxxx	uuuu uuuu
TMR3H	Timer3 High Byte Register								xxxx xxxx	uuuu uuuu
T1CON	RD16	T1RUN	T1CKPS1	T1CKPS0	T1OSCEN	$\overline{\text{T1SYNC}}$	TMR1CS	TMR1ON	0000 0000	u0uu uuuu
T3CON	RD16	T3CCP2	T3CKPS1	T3CKPS0	T3CCP1	$\overline{\text{T3SYNC}}$	TMR3CS	TMR3ON	0000 0000	uuuu uuuu

Legend: x = unknown, u = unchanged, – = unimplemented, read as '0'. Shaded cells are not used by the Timer3 module.

NOTES:

© 2007 Microchip Technology Inc.

15.0 CAPTURE/COMPARE/PWM (CCP) MODULES

The standard CCP (Capture/Compare/PWM) module contains a 16-bit register that can operate as a 16-bit Capture register, a 16-bit Compare register or a PWM Master/Slave Duty Cycle register. Table 15-1 shows the timer resources required for each of the CCP module modes.

The operation of CCP1 is identical to that of CCP2, with the exception of the Special Event Trigger. Therefore, operation of a CCP module is described with respect to CCP1 except where noted. Table 15-2 shows the interaction of the CCP modules.

Note: In 28-pin devices, both CCP1 and CCP2 function as standard CCP modules. In 40-pin devices, CCP1 is implemented as an Enhanced CCP module, offering additional capabilities in PWM mode. Capture and Compare modes are identical in all modules regardless of the device.

Please see **Section 16.0 "Enhanced Capture/Compare/PWM (ECCP) Module"** for a discussion of the enhanced PWM capabilities of the CCP1 module.

REGISTER 15-1: CCPxCON: CCPx CONTROL REGISTER

U-0	U-0	R/W-0	R/W-0	R/W-0	R/W-0	R/W-0	R/W-0
—	—	DCxB1	DCxB0	CCPxM3	CCPxM2	CCPxM1	CCPxM0
bit 7							bit 0

Legend:			
R = Readable bit	W = Writable bit	U = Unimplemented bit, read as '0'	
-n = Value at POR	'1' = Bit is set	'0' = Bit is cleared	x = Bit is unknown

bit 7-6 **Unimplemented:** Read as '0'

bit 5-4 **DCxB1:DCxB0**: PWM Duty Cycle Bit 1 and Bit 0 for CCPx Module

Capture mode:
Unused.

Compare mode:
Unused.

PWM mode:
These bits are the two LSbs (bit 1 and bit 0) of the 10-bit PWM duty cycle. The eight MSbs of the duty cycle are found in CCPR1L.

bit 3-0 **CCPxM3:CCPxM0**: CCPx Mode Select bits

0000 = Capture/Compare/PWM disabled (resets CCPx module)
0001 = Reserved
0010 = Compare mode: toggle output on match (CCPxIF bit is set)
0011 = Reserved
0100 = Capture mode: every falling edge
0101 = Capture mode: every rising edge
0110 = Capture mode: every 4th rising edge
0111 = Capture mode: every 16th rising edge
1000 = Compare mode: initialize CCPx pin low; on compare match, force CCPx pin high (CCPxIF bit is set)
1001 = Compare mode: initialize CCPx pin high; on compare match, force CCPx pin low (CCPxIF bit is set)
1010 = Compare mode: generate software interrupt on compare match (CCPxIF bit is set, CCPx pin operates as a port pin for input and output)
1011 = Compare mode: trigger special event (CCPxIF bit is set)
11xx = PWM mode

15.1 CCP1 Module

Capture/Compare/PWM Register 1 (CCPR1) is comprised of two 8-bit registers: CCPR1L (low byte) and CCPR1H (high byte). The CCP1CON register controls the operation of CCP1. All are readable and writable.

TABLE 15-1: CCP MODE - TIMER RESOURCE

CCP Mode	Timer Resource
Capture	Timer1 or Timer3
Compare	Timer1 or Timer3
PWM	Timer2

15.2 CCP2 Module

Capture/Compare/PWM Register 2 (CCPR2) is comprised of two 8-bit registers: CCPR2L (low byte) and CCPR2H (high byte). The CCP2CON register controls the operation of CCP2. All are readable and writable.

CCP2 functions identically to CCP1 except for the enhanced PWM modes offered by CCP2

TABLE 15-2: INTERACTION OF TWO CCP MODULES

CCPx Mode	CCPy Mode	Interaction
Capture	Capture	TMR1 or TMR3 time base. Time base can be different for each CCP.
Capture	Compare	The compare could be configured for the Special Event Trigger which clears either TMR1 or TMR3 depending upon which time base is used.
Compare	Compare	The compare(s) could be configured for the Special Event Trigger which clears TMR1 or TMR3 depending upon which time base is used.
PWM	PWM	The PWMs will have the same frequency and update rate (TMR2 interrupt).
PWM	Capture	None.
PWM	Compare	None.

© 2007 Microchip Technology Inc.

15.3 Capture Mode

In Capture mode, CCPR1H:CCPR1L captures the 16-bit value of the TMR1 or TMR3 registers when an event occurs on pin RC2/CCP1/P1A. An event is defined as one of the following:

- every falling edge
- every rising edge
- every 4th rising edge
- every 16th rising edge

The event is selected by control bits, CCP1M3:CCP1M0 (CCP1CON<3:0>). When a capture is made, the interrupt request flag bit, CCP1IF (PIR1<2>), is set; it must be cleared in software. If another capture occurs before the value in register CCPR1 is read, the old captured value is overwritten by the new captured value.

15.3.1 CCP PIN CONFIGURATION

In Capture mode, the RC2/CCP1/P1A pin should be configured as an input by setting the TRISC<2> bit.

Note:	If the RC2/CCP1/P1A is configured as an output, a write to the port can cause a capture condition.

15.3.2 TIMER1/TIMER3 MODE SELECTION

The timers that are to be used with the capture feature (either Timer1 and/or Timer3) must be running in Timer mode or Synchronized Counter mode. In Asynchronous Counter mode, the capture operation may not work. The timer to be used with each CCP module is selected in the T3CON register.

15.3.3 SOFTWARE INTERRUPT

When the Capture mode is changed, a false capture interrupt may be generated. The user should keep bit CCP1IE (PIE1<2>) clear to avoid false interrupts and should clear the flag bit, CCP1IF, following any such change in operating mode.

15.3.4 CCP PRESCALER

There are four prescaler settings specified by bits CCP1M3:CCP1M0. Whenever the CCP module is turned off, or the CCP module is not in Capture mode, the prescaler counter is cleared. This means that any Reset will clear the prescaler counter.

Switching from one capture prescaler to another may generate an interrupt. Also, the prescaler counter will not be cleared, therefore, the first capture may be from a non-zero prescaler. Example 15-1 shows the recommended method for switching between capture prescalers. This example also clears the prescaler counter and will not generate the “false” interrupt.

EXAMPLE 15-1: CHANGING BETWEEN CAPTURE PRESCALERS

```
CLRF    CCP1CON, F      ; Turn CCP module off
MOVLW   NEW_CAPT_PS     ; Load WREG with the
                        ; new prescaler mode
                        ; value and CCP ON
MOVWF   CCP1CON         ; Load CCP1CON with
                        ; this value
```

FIGURE 15-1: CAPTURE MODE OPERATION BLOCK DIAGRAM

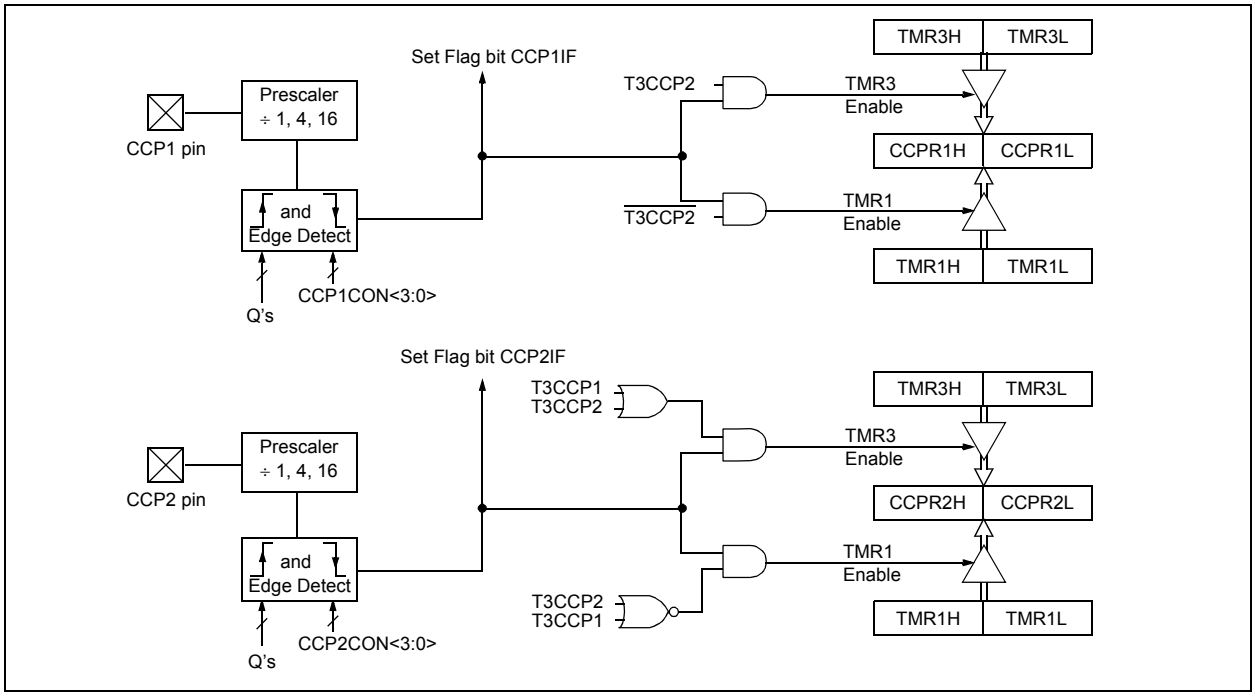

15.4 Compare Mode

In Compare mode, the 16-bit CCPR1 (CCPR2) register value is constantly compared against either the TMR1 register pair value, or the TMR3 register pair value. When a match occurs, the RC2/CCP1/P1A (RC1/T1OSI/CCP2) pin:

- Is driven high
- Is driven low
- Toggles output (high-to-low or low-to-high)
- Remains unchanged (interrupt only)

The action on the pin is based on the value of control bits, CCP1M3:CCP1M0 (CCP2M3:CCP2M0). At the same time, interrupt flag bit, CCP1IF (CCP2IF), is set.

15.4.1 CCP PIN CONFIGURATION

The user must configure the CCPx pin as an output by clearing the appropriate TRISC bit.

Note:	Clearing the CCP1CON register will force the RC2/CCP1/P1A compare output latch to the default low level. This is not the PORTC I/O data latch.

15.4.2 TIMER1/TIMER3 MODE SELECTION

Timer1 and/or Timer3 must be running in Timer mode, or Synchronized Counter mode, if the CCP module is using the compare feature. In Asynchronous Counter mode, the compare operation may not work.

15.4.3 SOFTWARE INTERRUPT MODE

When generate software interrupt is chosen, the CCP1 pin is not affected. Only a CCP interrupt is generated (if enabled).

15.4.4 SPECIAL EVENT TRIGGER

In this mode, an internal hardware trigger is generated which may be used to initiate an action.

The Special Event Trigger output of CCP1 resets the TMR1 register pair. This allows the CCPR1 register to effectively be a 16-bit programmable Period register for Timer1.

The special trigger output of CCP2 resets either the TMR1 or TMR3 register pair. Additionally, the CCP2 Special Event Trigger will start an A/D conversion if the A/D module is enabled.

Note:	The Special Event Trigger from the CCP2 module will not set the Timer1 or Timer3 interrupt flag bits.

FIGURE 15-2: COMPARE MODE OPERATION BLOCK DIAGRAM

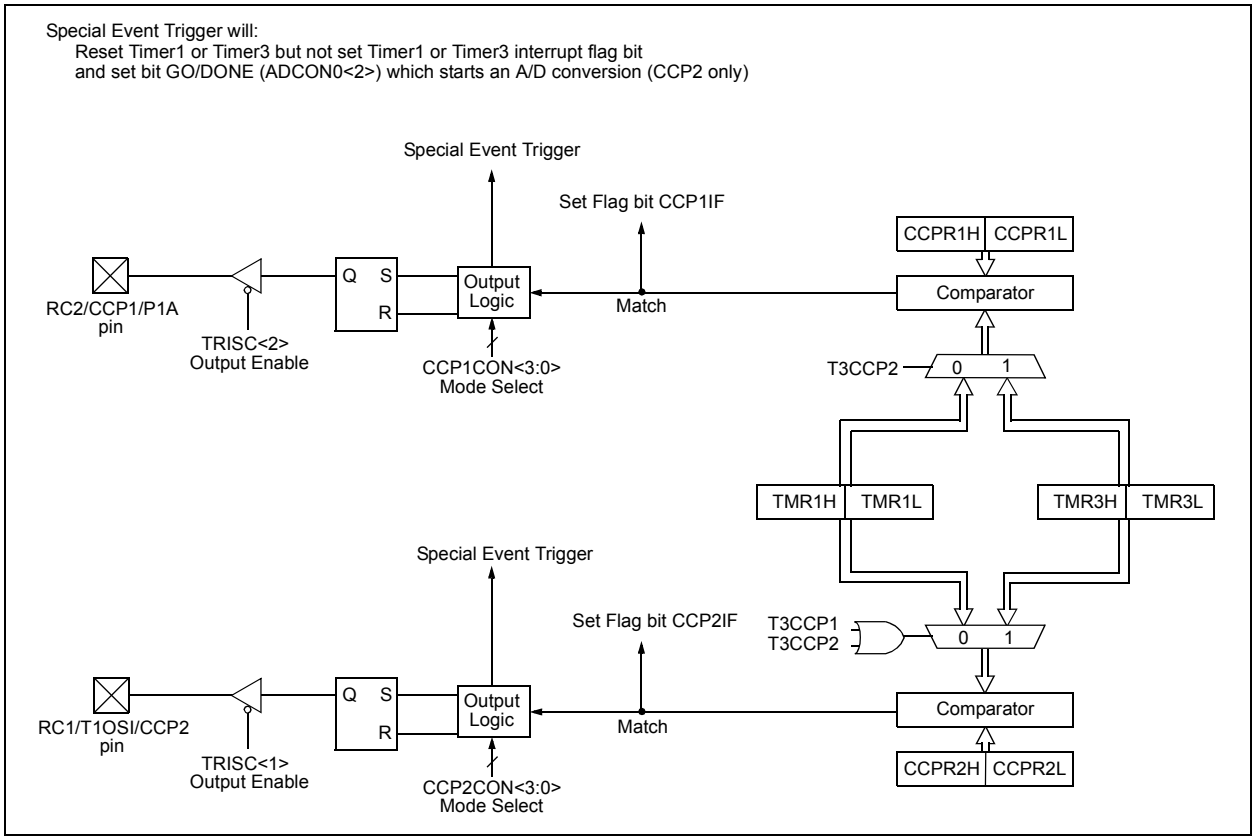

© 2007 Microchip Technology Inc.

TABLE 15-3: REGISTERS ASSOCIATED WITH CAPTURE, COMPARE, TIMER1 AND TIMER3

Name	Bit 7	Bit 6	Bit 5	Bit 4	Bit 3	Bit 2	Bit 1	Bit 0	Value on POR, BOR	Value on all other Resets
INTCON	GIE/GIEH	PEIE/GIEL	TMR0IE	INT0IE	RBIE	TMR0IF	INT0IF	RBIF	0000 000x	0000 000u
PIR1	PSPIF(1)	ADIF	RCIF	TXIF	SSPIF	CCP1IF	TMR2IF	TMR1IF	0000 0000	0000 0000
PIE1	PSPIE(1)	ADIE	RCIE	TXIE	SSPIE	CCP1IE	TMR2IE	TMR1IE	0000 0000	0000 0000
IPR1	PSPIP(1)	ADIP	RCIP	TXIP	SSPIP	CCP1IP	TMR2IP	TMR1IP	1111 1111	1111 1111
TRISC	PORTC Data Direction Register								1111 1111	1111 1111
TMR1L	Holding Register for the Least Significant Byte of the 16-bit TMR1 Register								xxxx xxxx	uuuu uuuu
TMR1H	Holding Register for the Most Significant Byte of the 16-bit TMR1 Register								xxxx xxxx	uuuu uuuu
T1CON	RD16	T1RUN	T1CKPS1	T1CKPS0	T1OSCEN	$\overline{\text{T1SYNC}}$	TMR1CS	TMR1ON	0000 0000	uuuu uuuu
CCPR1L	Capture/Compare/PWM Register 1 (LSB)								xxxx xxxx	uuuu uuuu
CCPR1H	Capture/Compare/PWM Register 1 (MSB)								xxxx xxxx	uuuu uuuu
CCP1CON	—	—	DC1B1	DC1B0	CCP1M3	CCP1M2	CCP1M1	CCP1M0	--00 0000	--00 0000
CCPR2L	Capture/Compare/PWM Register 2 (LSB)								xxxx xxxx	uuuu uuuu
CCPR2H	Capture/Compare/PWM Register 2 (MSB)								xxxx xxxx	uuuu uuuu
CCP2CON	—	—	DC2B1	DC2B0	CCP2M3	CCP2M2	CCP2M1	CCP2M0	--00 0000	--00 0000
PIR2	OSCFIF	CMIF	—	EEIF	BCLIF	LVDIF	TMR3IF	CCP2IF	00-0 0000	00-0 0000
PIE2	OSCFIE	CMIE	—	EEIE	BCLIE	LVDIE	TMR3IE	CCP2IE	00-0 0000	00-0 0000
IPR2	OSCFIP	CMIP	—	EEIP	BCLIP	LVDIP	TMR3IP	CCP2IP	11-1 1111	11-1 1111
TMR3L	Holding Register for the Least Significant Byte of the 16-bit TMR3 Register								xxxx xxxx	uuuu uuuu
TMR3H	Holding Register for the Most Significant Byte of the 16-bit TMR3 Register								xxxx xxxx	uuuu uuuu
T3CON	RD16	T3CCP2	T3CKPS1	T3CKPS0	T3CCP1	$\overline{\text{T3SYNC}}$	TMR3CS	TMR3ON	0000 0000	uuuu uuuu

Legend: x = unknown, u = unchanged, - = unimplemented, read as '0'. Shaded cells are not used by Capture and Timer1.
Note 1: These bits are reserved on the PIC18F2X20 devices; always maintain these bits clear.

15.5 PWM Mode

In Pulse Width Modulation (PWM) mode, the CCP1 pin produces up to a 10-bit resolution PWM output. Since the CCP1 pin is multiplexed with the PORTC data latch, the TRISC<2> bit must be cleared to make the CCP1 pin an output.

Note:	Clearing the CCP1CON register will force the CCP1 PWM output latch to the default low level. This is not the PORTC I/O data latch.

Figure 15-3 shows a simplified block diagram of the CCP module in PWM mode.

For a step-by-step procedure on how to set up the CCP module for PWM operation, see **Section 15.5.3 "Setup for PWM Operation"**.

FIGURE 15-3: SIMPLIFIED PWM BLOCK DIAGRAM

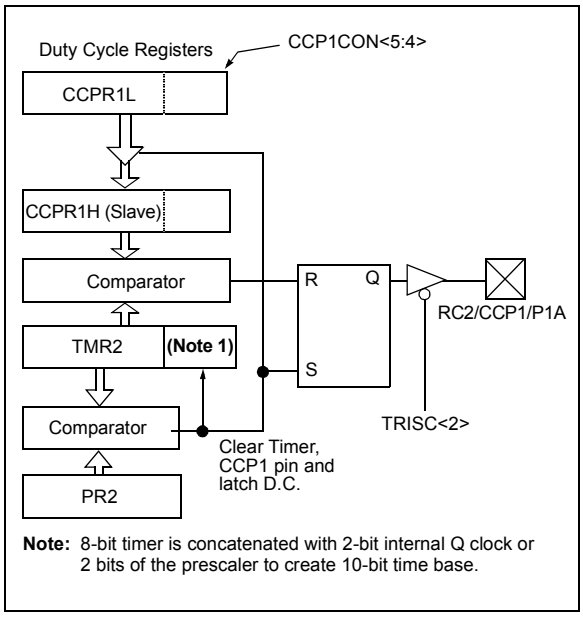

Note: 8-bit timer is concatenated with 2-bit internal Q clock or 2 bits of the prescaler to create 10-bit time base.

A PWM output (Figure 15-4) has a time base (*period*) and a time that the output is high (*duty cycle*). The frequency of the PWM is the inverse of the period (1/period).

FIGURE 15-4: PWM OUTPUT

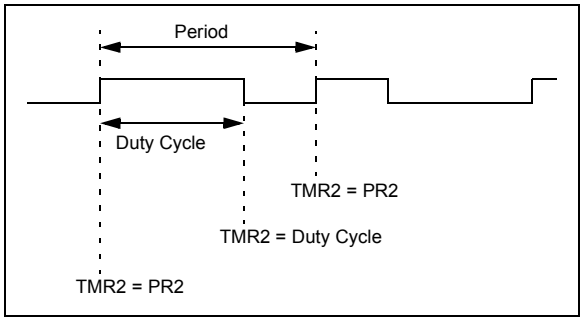

15.5.1 PWM PERIOD

The PWM period is specified by writing to the PR2 register. The PWM period can be calculated using the following equation.

EQUATION 15-1:

$$\text{PWM Period} = [(PR2) + 1] \cdot 4 \cdot T_{OSC} \cdot (\text{TMR2 Prescale Value})$$

PWM frequency is defined as 1/[PWM period]. When TMR2 is equal to PR2, the following three events occur on the next increment cycle:

- TMR2 is cleared
- The CCP1 pin is set (if PWM duty cycle = 0%, the CCP1 pin will not be set)
- The PWM duty cycle is copied from CCPR1L into CCPR1H

Note:	The Timer2 postscaler (see **Section 13.0 "Timer2 Module"**) is not used in the determination of the PWM frequency. The postscaler could be used to have a servo update rate at a different frequency than the PWM output.

15.5.2 PWM DUTY CYCLE

The PWM duty cycle is specified by writing to the CCPR1L register and to the CCP1CON<5:4> bits. Up to 10-bit resolution is available. The CCPR1L contains the eight MSbs and the CCP1CON<5:4> contains the two LSbs. This 10-bit value is represented by CCPR1L:CCP1CON<5:4>. The PWM duty cycle is calculated by the following equation.

EQUATION 15-2:

$$\text{PWM Duty Cycle} = (\text{CCPR1L:CCP1CON<5:4>}) \cdot T_{OSC} \cdot (\text{TMR2 Prescale Value})$$

CCPR1L and CCP1CON<5:4> can be written to at any time but the duty cycle value is not copied into CCPR1H until a match between PR2 and TMR2 occurs (i.e., the period is complete). In PWM mode, CCPR1H is a read-only register.

© 2007 Microchip Technology Inc.

The CCPR1H register and a 2-bit internal latch are used to double-buffer the PWM duty cycle. This double-buffering is essential for glitchless PWM operation. When the CCPR1H and 2-bit latch match TMR2, concatenated with an internal 2-bit Q clock or two bits of the TMR2 prescaler, the CCP1 pin is cleared. The maximum PWM resolution (bits) for a given PWM frequency is given by the following equation.

EQUATION 15-3:

$$\text{PWM Resolution (max)} = \frac{\log\left(\frac{FOSC}{FPWM}\right)}{\log(2)} \text{ bits}$$

Note:	If the PWM duty cycle value is longer than the PWM period, the CCP1 pin will not be cleared.

15.5.3 SETUP FOR PWM OPERATION

The following steps should be taken when configuring the CCP module for PWM operation:

1. Set the PWM period by writing to the PR2 register.
2. Set the PWM duty cycle by writing to the CCPR1L register and the CCP1CON<5:4> bits.
3. Make the CCP1 pin an output by clearing the TRISC<2> bit.
4. Set the TMR2 prescale value and enable Timer2 by writing to T2CON.
5. Configure the CCP1 module for PWM operation.

TABLE 15-4: EXAMPLE PWM FREQUENCIES AND RESOLUTIONS AT 40 MHz

PWM Frequency	2.44 kHz	9.77 kHz	39.06 kHz	156.25 kHz	312.50 kHz	416.67 kHz
Timer Prescaler (1, 4, 16)	16	4	1	1	1	1
PR2 Value	FFh	FFh	FFh	3Fh	1Fh	17h
Maximum Resolution (bits)	10	10	10	8	7	6.58

TABLE 15-5: REGISTERS ASSOCIATED WITH PWM AND TIMER2

Name	Bit 7	Bit 6	Bit 5	Bit 4	Bit 3	Bit 2	Bit 1	Bit 0	Value on POR, BOR	Value on all other Resets
INTCON	GIE/GIEH	PEIE/GIEL	TMR0IE	INT0IE	RBIE	TMR0IF	INT0IF	RBIF	0000 000x	0000 000u
PIR1	PSPIF(1)	ADIF	RCIF	TXIF	SSPIF	CCP1IF	TMR2IF	TMR1IF	0000 0000	0000 0000
PIE1	PSPIE(1)	ADIE	RCIE	TXIE	SSPIE	CCP1IE	TMR2IE	TMR1IE	0000 0000	0000 0000
IPR1	PSPIP(1)	ADIP	RCIP	TXIP	SSPIP	CCP1IP	TMR2IP	TMR1IP	1111 1111	1111 1111
TRISC	PORTC Data Direction Register								1111 1111	1111 1111
TMR2	Timer2 Module Register								0000 0000	0000 0000
PR2	Timer2 Module Period Register								1111 1111	1111 1111
T2CON	—	TOUTPS3	TOUTPS2	TOUTPS1	TOUTPS0	TMR2ON	T2CKPS1	T2CKPS0	-000 0000	-000 0000
CCPR1L	Capture/Compare/PWM Register 1 (LSB)								xxxx xxxx	uuuu uuuu
CCPR1H	Capture/Compare/PWM Register 1 (MSB)								xxxx xxxx	uuuu uuuu
CCP1CON	—	—	DC1B1	DC1B0	CCP1M3	CCP1M2	CCP1M1	CCP1M0	--00 0000	--00 0000
CCPR2L	Capture/Compare/PWM Register 2 (LSB)								xxxx xxxx	uuuu uuuu
CCPR2H	Capture/Compare/PWM Register 2 (MSB)								xxxx xxxx	uuuu uuuu
CCP2CON	—	—	DC2B1	DC2B0	CCP2M3	CCP2M2	CCP2M1	CCP2M0	--00 0000	--00 0000
OSCCON	IDLEN	IRCF2	IRCF1	IRCF0	OSTS	IOFS	SCS1	SCS0	0000 qq00	0000 qq00

Legend: x = unknown, u = unchanged, - = unimplemented, read as '0'. Shaded cells are not used by PWM and Timer2.
Note 1: The PSPIF, PSPIE and PSPIP bits are reserved on the PIC18F2X20 devices; always maintain these bits clear.

NOTES:

© 2007 Microchip Technology Inc.

16.0 ENHANCED CAPTURE/ COMPARE/PWM (ECCP) MODULE

Note:	The ECCP (Enhanced Capture/ Compare/ PWM) module is only available on PIC18F4X20 devices.

In 40 and 44-pin devices, the CCP1 module is implemented as a standard CCP module with enhanced PWM capabilities. Operation of the Capture, Compare and standard single output PWM modes is described in **Section 15.0 "Capture/Compare/PWM (CCP) Modules"**. Discussion in that section relating to PWM frequency and duty cycle also apply to the enhanced PWM mode.

The ECCP module differs from the CCP with the addition of an enhanced PWM mode which allows for 2 or 4 output channels, user-selectable polarity, dead band control and automatic shutdown and restart. These features are discussed in detail in **Section 16.4 "Enhanced PWM Mode"**.

The control register for CCP1 is shown in Register 16-1. It differs from the CCP1CON register of PIC18F2X20 devices in that the two Most Significant bits are implemented to control enhanced PWM functionality.

REGISTER 16-1: CCP1CON: ECCP CONTROL REGISTER (40/44-PIN DEVICES)

R/W-0	R/W-0	R/W-0	R/W-0	R/W-0	R/W-0	R/W-0	R/W-0
P1M1	P1M0	DC1B1	DC1B0	CCP1M3	CCP1M2	CCP1M1	CCP1M0
bit 7							bit 0

Legend:			
R = Readable bit	W = Writable bit	U = Unimplemented bit, read as '0'	
-n = Value at POR	'1' = Bit is set	'0' = Bit is cleared	x = Bit is unknown

bit 7-6 **P1M1:P1M0:** PWM Output Configuration bits

If CCP1M3:CCP1M2 = 00, 01, 10 (Capture, Compare or disabled):

xx = P1A assigned as Capture/Compare input; P1B, P1C, P1D assigned as port pins

If CCP1M3:CCP1M2 = 11 (PWM modes):

00 = Single output: P1A modulated; P1B, P1C, P1D assigned as port pins

01 = Full-bridge output forward: P1D modulated; P1A active; P1B, P1C inactive

10 = Half-bridge output: P1A, P1B modulated with dead-band control; P1C, P1D assigned as port pins

11 = Full-bridge output reverse: P1B modulated; P1C active; P1A, P1D inactive

bit 5-4 **DC1B1:DC1B0**: PWM Duty Cycle Least Significant bits

Capture mode:

Unused.

Compare mode:

Unused.

PWM mode:

These bits are the two LSbs of the 10-bit PWM duty cycle. The eight MSbs of the duty cycle are found in CCPR1L.

REGISTER 16-1: CCP1CON: ECCP CONTROL REGISTER (40/44-PIN DEVICES) (CONTINUED)

bit 3-0 **CCP1M3:CCP1M0:** ECCP Mode Select bits

0000 = Capture/Compare/PWM off (resets ECCP module)
0001 = Unused (reserved)
0010 = Compare mode, toggle output on match (CCP1IF bit is set)
0011 = Unused (reserved)
0100 = Capture mode, every falling edge
0101 = Capture mode, every rising edge
0110 = Capture mode, every 4th rising edge
0111 = Capture mode, every 16th rising edge
1000 = Compare mode, set output on match (CCP1IF bit is set)
1001 = Compare mode, clear output on match (CCP1IF bit is set)
1010 = Compare mode, generate software interrupt on match (CCP1IF bit is set, CCP1 pin operates as a port pin for input and output)
1011 = Compare mode, trigger special event (CCP1IF bit is set, ECCP resets TMR1or TMR2 and starts an A/D conversion if the A/D module is enabled)
1100 = PWM mode, P1A, P1C active-high, P1B, P1D active-high
1101 = PWM mode, P1A, P1C active-high, P1B, P1D active-low
1110 = PWM mode, P1A, P1C active-low, P1B, P1D active-high
1111 = PWM mode, P1A, P1C active-low, P1B, P1D active-low

In addition to the expanded functions of the CCP1CON register, the ECCP module has two additional registers associated with enhanced PWM operation and Auto-Shutdown features:

- PWM1CON
- ECCPAS

All other registers associated with the ECCP module are identical to those used for the CCP1 module in PIC18F2X20 devices, including register and individual bit names. Likewise, the timer assignments and interactions between the two CCP modules are identical, regardless of whether CCP1 is a standard or enhanced module.

16.1 ECCP Outputs

The Enhanced CCP module may have up to four outputs depending on the selected operating mode. These outputs, designated P1A through P1D, are multiplexed with I/O pins on PORTC and PORTD. The pin assignments are summarized in Table 16-1.

To configure I/O pins as PWM outputs, the proper PWM mode must be selected by setting the P1Mx and CCP1Mx bits (CCP1CON<7:6> and <3:0>, respectively). The appropriate TRISC and TRISD direction bits for the port pins must also be set as outputs.

16.2 Capture and Compare Modes

The Capture and Compare modes of the ECCP module are identical in operation to that of CCP1, as discussed in **Section 15.3 "Capture Mode"** and **Section 15.4 "Compare Mode"**. No changes are required when moving between these modules on PIC18F2X20 and PIC18F4X20 devices.

16.3 Standard PWM Mode

When configured in Single Output mode, the ECCP module functions identically to the standard CCP module in PWM mode, as described in **Section 15.4 "Compare Mode"**.

Note:	When setting up single output PWM operations, users are free to use either of the processes described in **Section 15.5.3 "Setup for PWM Operation"** or **Section 16.4.7 "Setup for PWM Operation"**. The latter is more generic but will work for either single or multi output PWM.

TABLE 16-1: PIN ASSIGNMENTS FOR VARIOUS ECCP MODES

ECCP Mode	CCP1CON Configuration	RC2	RD5	RD6	RD7
Compatible CCP	00xx11xx	CCP1	RD5/PSP5	RD6/PSP6	RD7/PSP7
Dual PWM	10xx11xx	P1A	P1B	RD6/PSP6	RD6/PSP6
Quad PWM	x1xx11xx	P1A	P1B	P1C	P1D

Legend: x = Don't care. Shaded cells indicate pin assignments not used by ECCP in a given mode.

Note 1: TRIS register values must be configured appropriately.

2: With ECCP in Dual or Quad PWM mode, the PSP input/output control of PORTD is overridden by P1B, P1C and P1D.

© 2007 Microchip Technology Inc.

16.4 Enhanced PWM Mode

The Enhanced PWM mode provides additional PWM output options for a broader range of control applications. The module is an upwardly compatible version of the standard CCP module and offers up to four outputs, designated P1A through P1D. Users are also able to select the polarity of the signal (either active-high or active-low). The module's output mode and polarity are configured by setting the P1M1:P1M0 and CCP1M3:CCP1M0 bits of the CCP1CON register (CCP1CON<7:6> and CCP1CON<3:0>, respectively).

Figure 16-1 shows a simplified block diagram of PWM operation. All control registers are double-buffered and are loaded at the beginning of a new PWM cycle (the period boundary when Timer2 resets) in order to prevent glitches on any of the outputs. The exception is the PWM Delay register, ECCP1DEL, which is loaded at either the duty cycle boundary or the boundary period (whichever comes first). Because of the buffering, the module waits until the assigned timer resets instead of starting immediately. This means that enhanced PWM waveforms do not exactly match the standard PWM waveforms but are instead offset by one full instruction cycle (4 TOSC).

As before, the user must manually configure the appropriate TRISD bits for output.

16.4.1 PWM OUTPUT CONFIGURATIONS

The P1M1:P1M0 bits in the CCP1CON register allow one of four configurations:

- Single Output
- Half-Bridge Output
- Full-Bridge Output, Forward mode
- Full-Bridge Output, Reverse mode

The Single Output mode is the Standard PWM mode discussed in **Section 15.5 "PWM Mode"**. The Half-Bridge and Full-Bridge Output modes are covered in detail in the sections that follow.

The general relationship of the outputs in all configurations is summarized in Figure 16-2.

FIGURE 16-1: SIMPLIFIED BLOCK DIAGRAM OF THE ENHANCED PWM MODULE

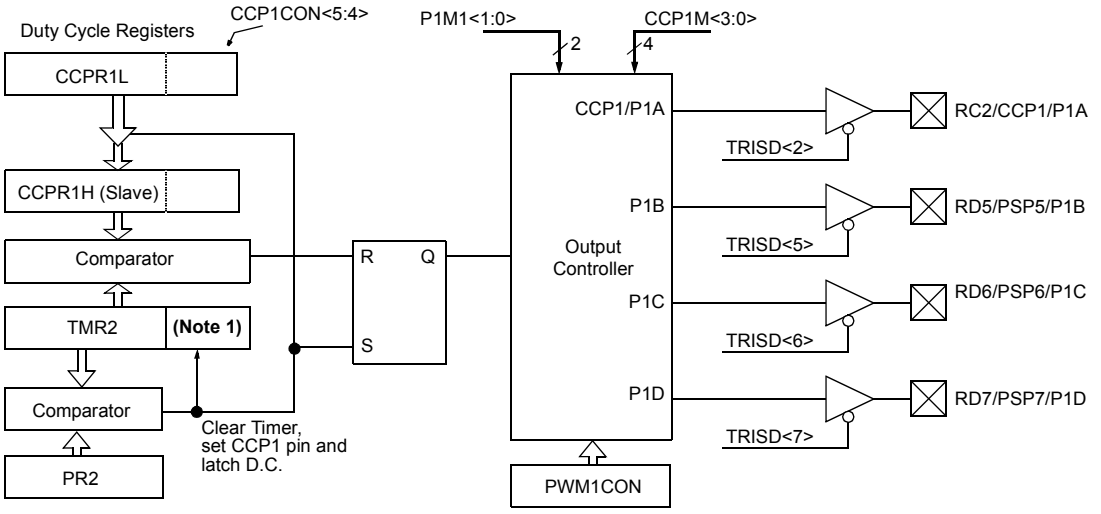

Note: The 8-bit timer TMR2 register is concatenated with the 2-bit internal Q clock or 2 bits of the prescaler to create the 10-bit time base.

FIGURE 16-2: PWM OUTPUT RELATIONSHIPS (ACTIVE-HIGH STATE)

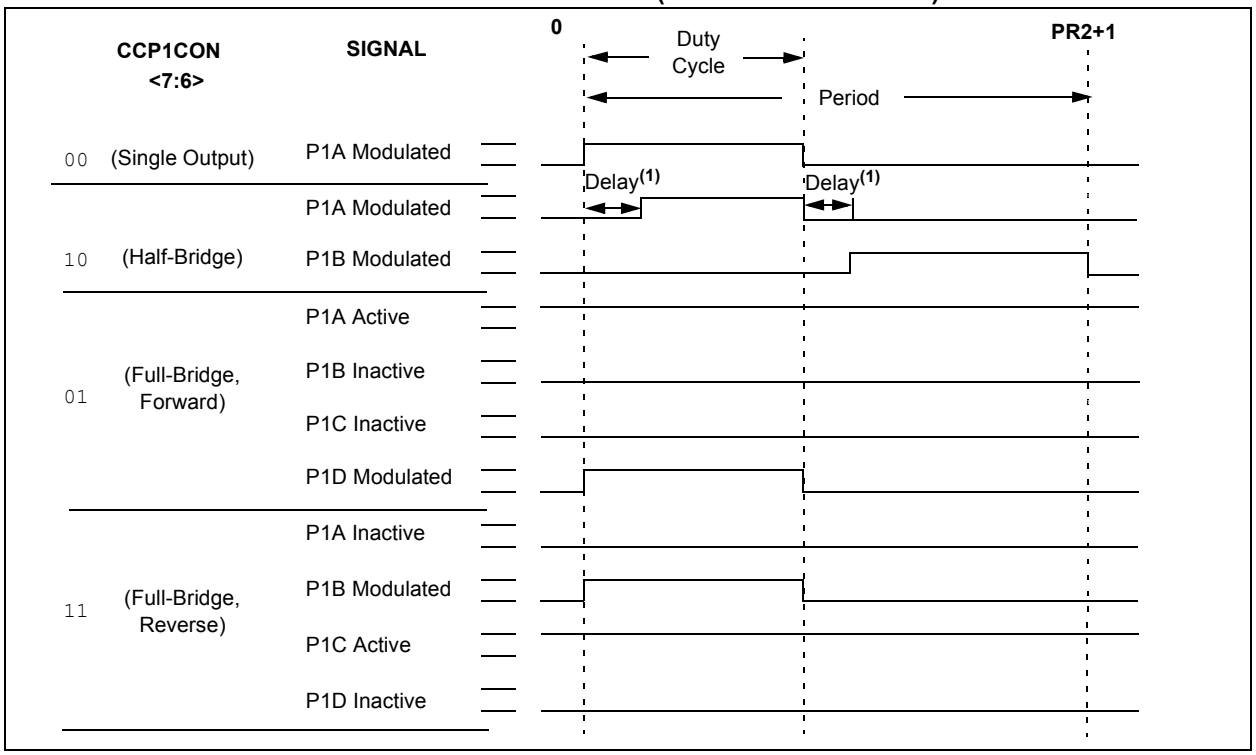

FIGURE 16-3: PWM OUTPUT RELATIONSHIPS (ACTIVE-LOW STATE)

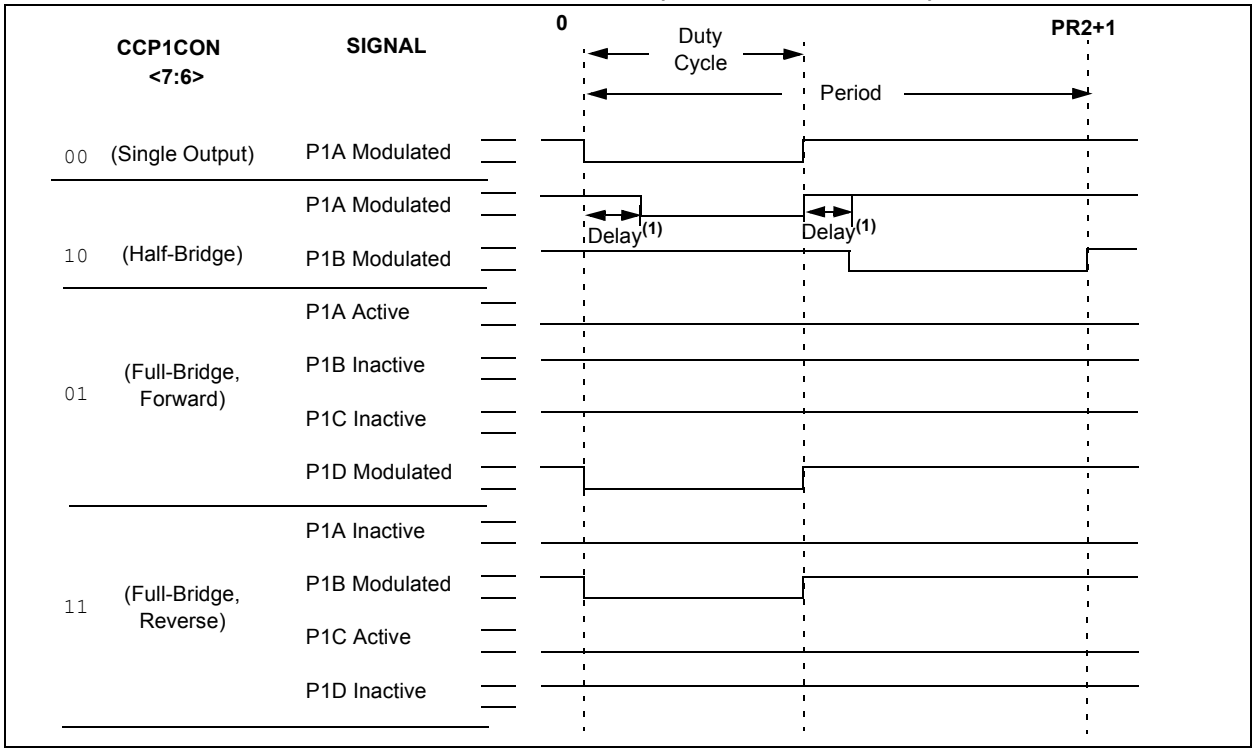

Relationships:

- Period = 4 * TOSC * (PR2 + 1) * (TMR2 Prescale Value)
- Duty Cycle = TOSC * (CCPR1L<7:0>:CCP1CON<5:4>) * (TMR2 Prescale Value)
- Delay = 4 * TOSC * (PWM1CON<6:0>)

Note 1: Dead band delay is programmed using the PWM1CON register (see **Section 16.4.4 "Programmable Dead-Band Delay"**).

© 2007 Microchip Technology Inc.

16.4.2 HALF-BRIDGE MODE

In the Half-Bridge Output mode, two pins are used as outputs to drive push-pull loads. The PWM output signal is output on the RC2/CCP1/P1A pin, while the complementary PWM output signal is output on the RD5/PSP5/P1B pin (Figure 16-4). This mode can be used for half-bridge applications, as shown in Figure 16-5, or for full-bridge applications where four power switches are being modulated with two PWM signals.

In Half-Bridge Output mode, the programmable dead band delay can be used to prevent shoot-through current in half-bridge power devices. The value of bits PDC6:PDC0 sets the number of instruction cycles before the output is driven active. If the value is greater than the duty cycle, the corresponding output remains inactive during the entire cycle. See **Section 16.4.4 "Programmable Dead-Band Delay"** for more details of the dead band delay operations.

Since the P1A and P1B outputs are multiplexed with the PORTC<2> and PORTD<5> data latches, the TRISC<2> and TRISD<5> bits must be cleared to configure P1A and P1B as outputs.

FIGURE 16-4: HALF-BRIDGE PWM OUTPUT

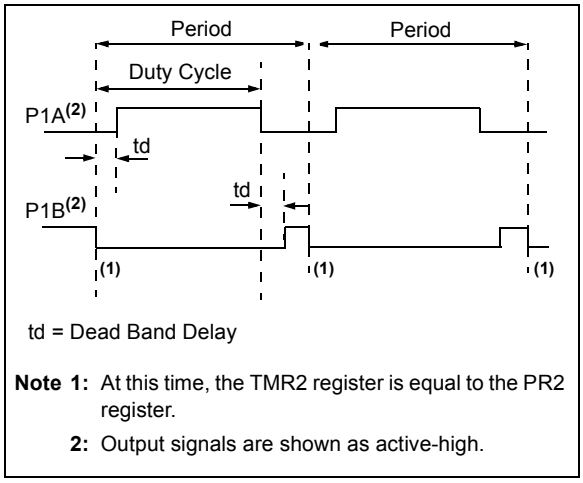

td = Dead Band Delay

Note 1: At this time, the TMR2 register is equal to the PR2 register.

2: Output signals are shown as active-high.

FIGURE 16-5: EXAMPLES OF HALF-BRIDGE OUTPUT MODE APPLICATIONS

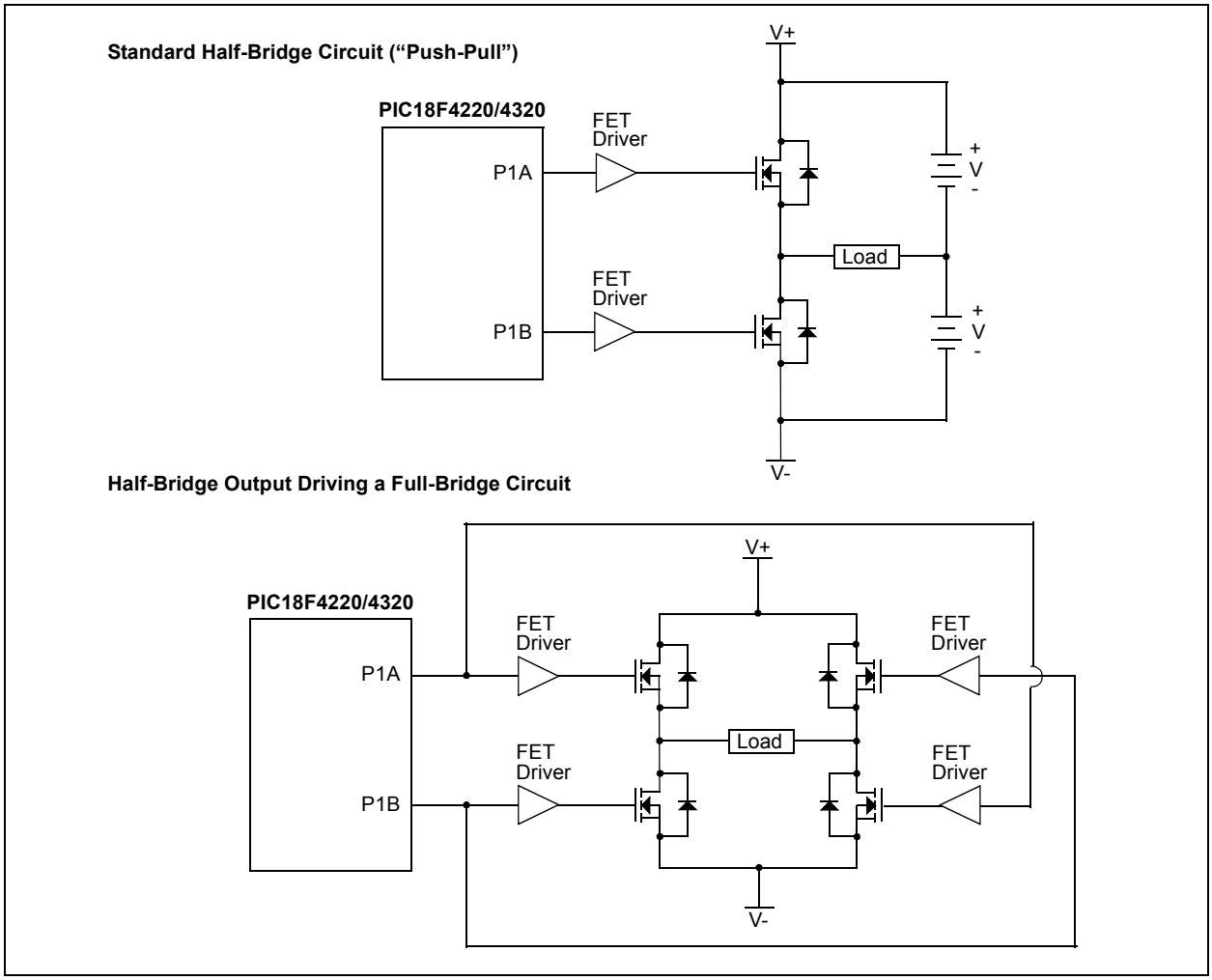

16.4.3 FULL-BRIDGE MODE

In Full-Bridge Output mode, four pins are used as outputs; however, only two outputs are active at a time. In the Forward mode, pin RC2/CCP1/P1A is continuously active and pin RD7/PSP7/P1D is modulated. In the Reverse mode, RD6/PSP6/P1C pin is continuously active and RD5/PSP5/P1B pin is modulated. These are illustrated in Figure 16-6.

P1A, P1B, P1C and P1D outputs are multiplexed with the PORTC<2> and PORTD<5:7> data latches. The TRISC<2> and TRISD<5:7> bits must be cleared to make the P1A, P1B, P1C and P1D pins output.

FIGURE 16-6: FULL-BRIDGE PWM OUTPUT

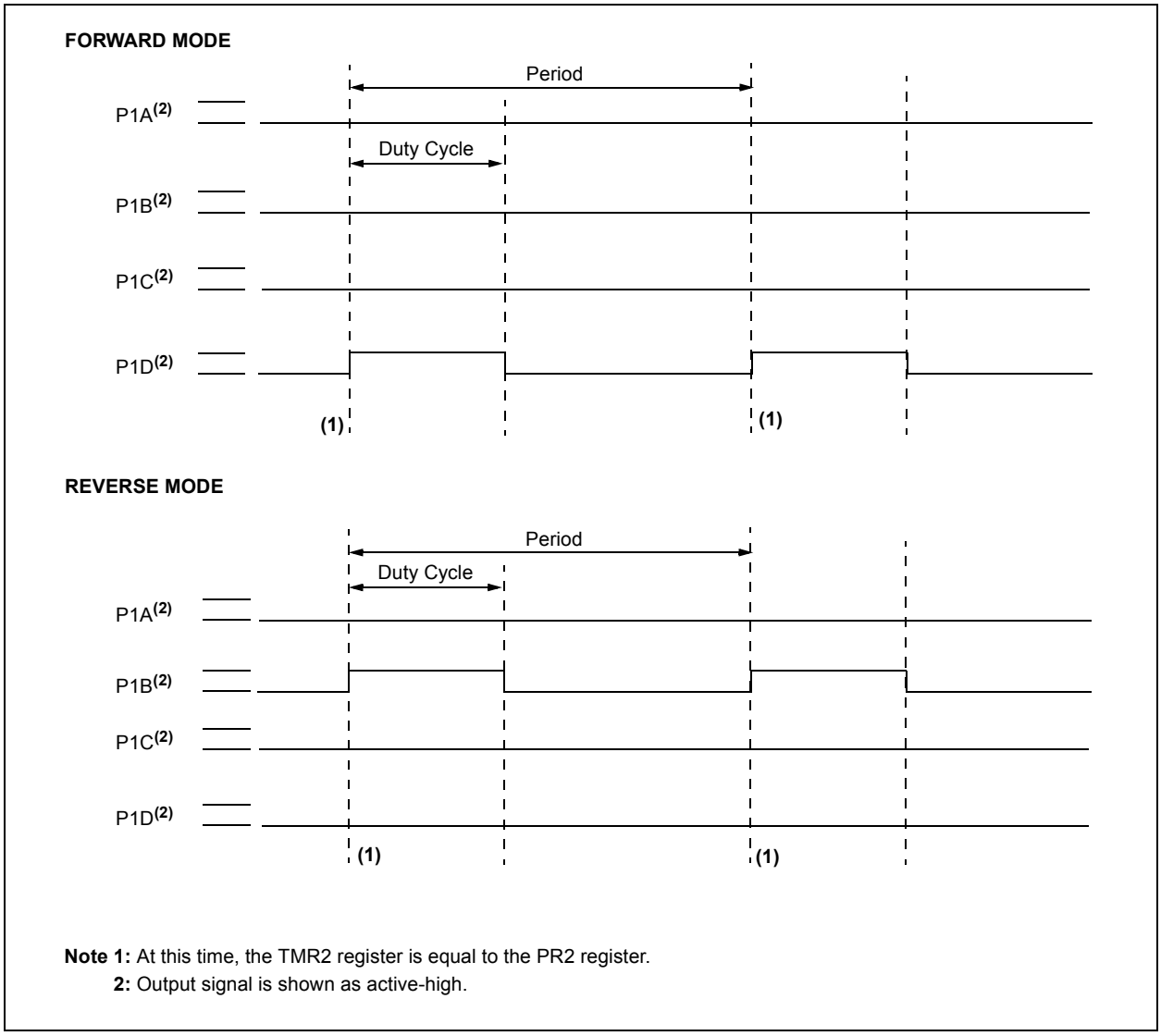

Note 1: At this time, the TMR2 register is equal to the PR2 register.
2: Output signal is shown as active-high.

© 2007 Microchip Technology Inc.

FIGURE 16-7: EXAMPLE OF FULL-BRIDGE APPLICATION

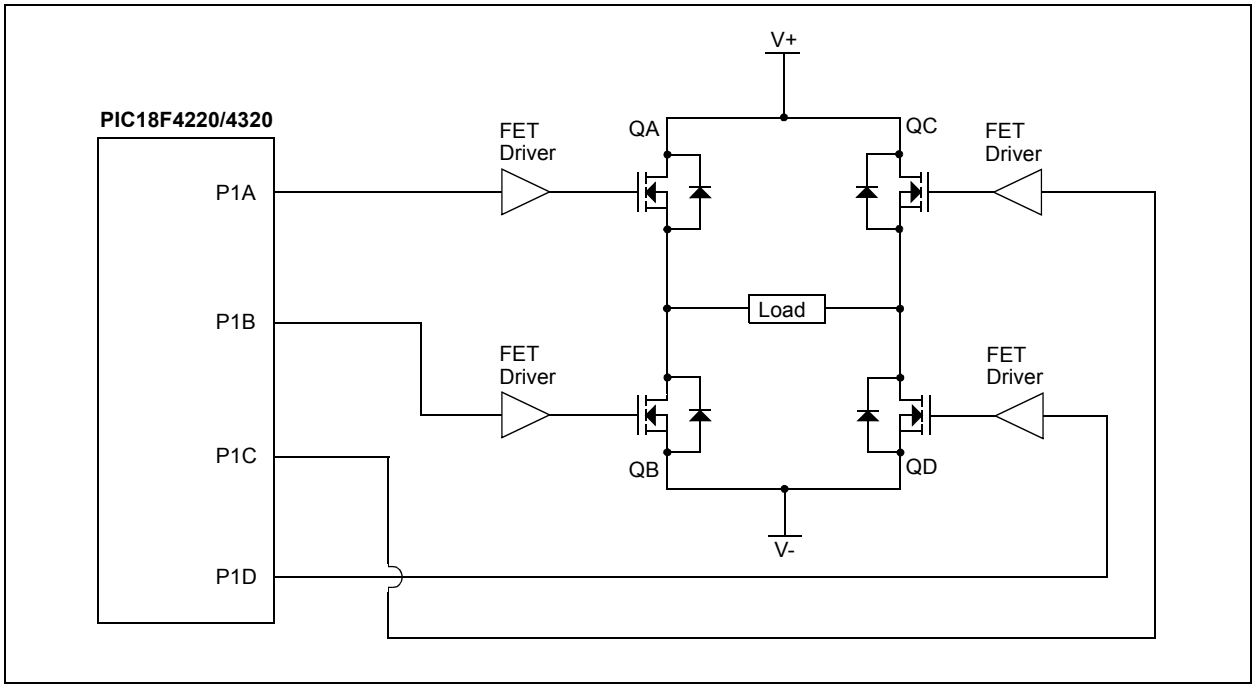

16.4.3.1 Direction Change in Full-Bridge Mode

In the Full-Bridge Output mode, the P1M1 bit in the CCP1CON register allows users to control the forward/ reverse direction. When the application firmware changes this direction control bit, the module will assume the new direction on the next PWM cycle.

Just before the end of the current PWM period, the modulated outputs (P1B and P1D) are placed in their inactive state, while the unmodulated outputs (P1A and P1C) are switched to drive in the opposite direction. This occurs in a time interval of 4 TOSC * (Timer2 Prescale Value) before the next PWM period begins. The Timer2 prescaler will be either 1, 4 or 16, depending on the value of the T2CKPS bit (T2CON<1:0>). During the interval from the switch of the unmodulated outputs to the beginning of the next period, the modulated outputs (P1B and P1D) remain inactive. This relationship is shown in Figure 16-8.

Note that in the Full-Bridge Output mode, the ECCP module does not provide any dead band delay. In general, since only one output is modulated at all times, dead band delay is not required. However, there is a situation where a dead band delay might be required. This situation occurs when both of the following conditions are true:

1. The direction of the PWM output changes when the duty cycle of the output is at or near 100%.
2. The turn-off time of the power switch, including the power device and driver circuit, is greater than the turn-on time.

Figure 16-9 shows an example where the PWM direction changes from forward to reverse at a near 100% duty cycle. At time t1, the outputs P1A and P1D become inactive, while output P1C becomes active. In this example, since the turn-off time of the power devices is longer than the turn-on time, a shoot-through current may flow through power devices QC and QD (see Figure 16-7) for the duration of ‘t’. The same phenomenon will occur to power devices QA and QB for PWM direction change from reverse to forward.

If changing PWM direction at high duty cycle is required for an application, one of the following requirements must be met:

1. Reduce PWM for a PWM period before changing directions.
2. Use switch drivers that can drive the switches off faster than they can drive them on.

Other options to prevent shoot-through current may exist.

FIGURE 16-8: PWM DIRECTION CHANGE

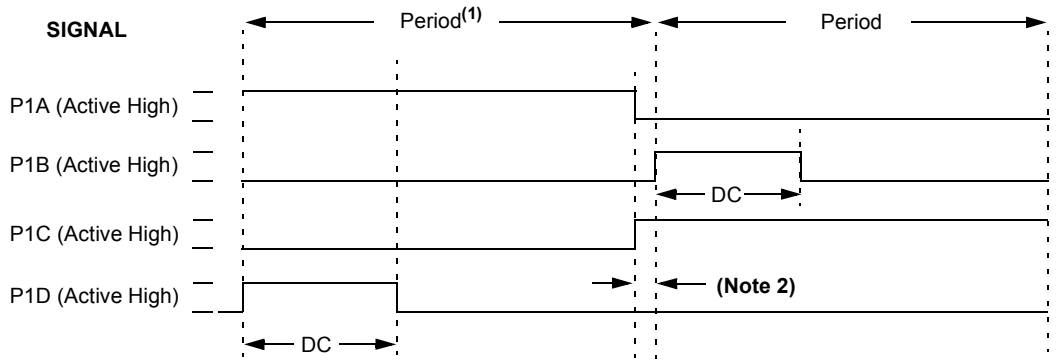

Note 1: The direction bit in the CCP1 Control register (CCP1CON<7>) is written any time during the PWM cycle.
2: When changing directions, the P1A and P1C signals switch before the end of the current PWM cycle at intervals of 4 TOSC, 16 TOSC or 64 TOSC, depending on the Timer2 prescaler value. The modulated P1B and P1D signals are inactive at this time.

FIGURE 16-9: PWM DIRECTION CHANGE AT NEAR 100% DUTY CYCLE(1)

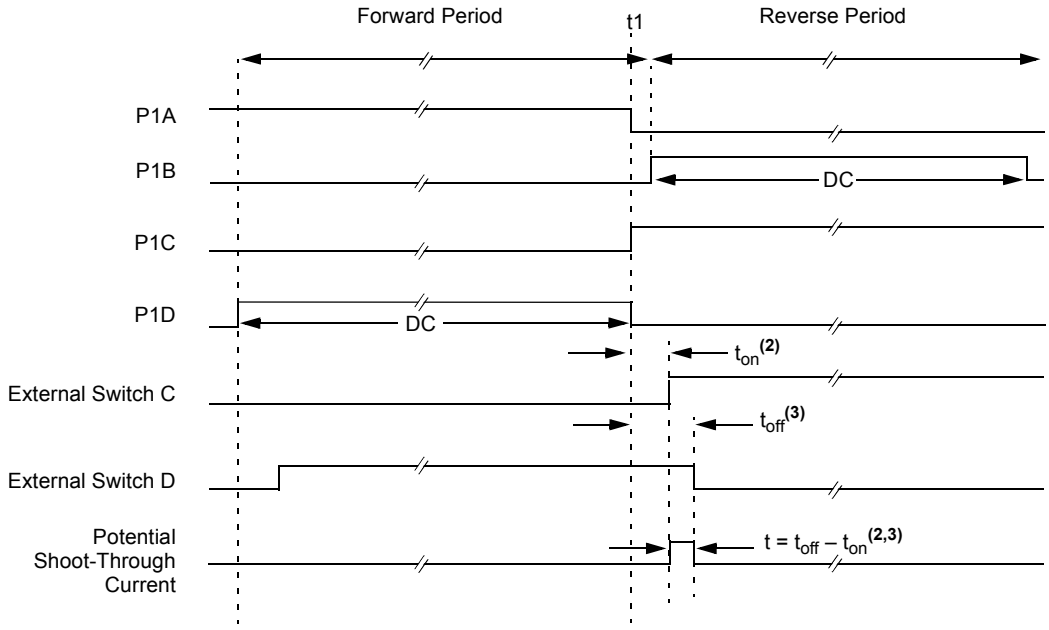

Note 1: All signals are shown as active-high.
2: t_{on} is the turn-on delay of power switch QC and its driver.
3: t_{off} is the turn-off delay of power switch QD and its driver.

© 2007 Microchip Technology Inc.

16.4.4 PROGRAMMABLE DEAD-BAND DELAY

In half-bridge applications, where all power switches are modulated at the PWM frequency at all times, the power switches normally require more time to turn off than to turn on. If both the upper and lower power switches are switched at the same time (one turned on and the other turned off), both switches may be on for a short period of time until one switch completely turns off. During this brief interval, a very high current (*shoot-through current*) may flow through both power switches, shorting the bridge supply. To avoid this potentially destructive shoot-through current from flowing during switching, turning on either of the power switches is normally delayed to allow the other switch to completely turn off.

In the Half-Bridge Output mode, a digitally programmable dead band delay is available to avoid shoot-through current from destroying the bridge power switches. The delay occurs at the signal transition from the non-active state to the active state. See Figure 16-4 for illustration. The lower seven bits of the PWM1CON register (Register 16-2) set the delay period in terms of microcontroller instruction cycles (TCY or 4 TOSC).

16.4.5 ENHANCED PWM AUTO-SHUTDOWN

When the ECCP is programmed for any of the enhanced PWM modes, the active output pins may be configured for auto-shutdown. Auto-shutdown immediately places the enhanced PWM output pins into a defined shutdown state when a shutdown event occurs.

A shutdown event can be caused by either of the two comparator modules or the INT0 pin (or any combination of these three sources). The comparators may be used to monitor a voltage input proportional to a current being monitored in the bridge circuit. If the voltage exceeds a threshold, the comparator switches state and triggers a shutdown. Alternatively, a digital signal on the INT0 pin can also trigger a shutdown. The auto-shutdown feature can be disabled by not selecting any auto-shutdown sources. The auto-shutdown sources to be used are selected using the ECCPAS2:ECCPAS0 bits (ECCPAS<6:4>).

When a shutdown occurs, the output pins are asynchronously placed in their shutdown states, specified by the PSSAC1:PSSAC0 and PSSBD1:PSSBD0 bits (ECCPAS<3:0>). Each pin pair (P1A/P1C and P1B/P1D) may be set to drive high, drive low or be tri-stated (not driving). The ECCPASE bit (ECCPAS<7>) is also set to hold the enhanced PWM outputs in their shutdown states.

The ECCPASE bit is set by hardware when a shutdown event occurs. If automatic restarts are not enabled, the ECCPASE bit is cleared by firmware when the cause of the shutdown clears. If automatic restarts are enabled, the ECCPASE bit is automatically cleared when the cause of the auto-shutdown has cleared.

If the ECCPASE bit is set when a PWM period begins, the PWM outputs remain in their shutdown state for that entire PWM period. When the ECCPASE bit is cleared, the PWM outputs will return to normal operation at the beginning of the next PWM period.

Note:	Writing to the ECCPASE bit is disabled while a shutdown condition is active.

REGISTER 16-2: PWM1CON: PWM CONFIGURATION REGISTER

R/W-0	R/W-0	R/W-0	R/W-0	R/W-0	R/W-0	R/W-0	R/W-0
PRSEN	PDC6	PDC5	PDC4	PDC3	PDC2	PDC1	PDC0
bit 7							bit 0

Legend:			
R = Readable bit	W = Writable bit	U = Unimplemented bit, read as ‘0’	
-n = Value at POR	‘1’ = Bit is set	‘0’ = Bit is cleared	x = Bit is unknown

bit 7 **PRSEN:** PWM Restart Enable bit

1 = Upon auto-shutdown, the ECCPASE bit clears automatically once the shutdown event goes away; the PWM restarts automatically

0 = Upon auto-shutdown, ECCPASE must be cleared in software to restart the PWM

bit 6-0 **PDC6:PDC0:** PWM Delay Count bits

Delay time, in number of FOSC/4 (4 * TOSC) cycles, between the scheduled time when a PWM signal should transition to active and the actual time it transitions active.

REGISTER 16-3: ECCPAS: ENHANCED CAPTURE/COMPARE/PWM AUTO-SHUTDOWN CONTROL REGISTER

R/W-0	R/W-0	R/W-0	R/W-0	R/W-0	R/W-0	R/W-0	R/W-0
ECCPASE	ECCPAS2	ECCPAS1	ECCPAS0	PSSAC1	PSSAC0	PSSBD1	PSSBD0
bit 7							bit 0

Legend:			
R = Readable bit	W = Writable bit	U = Unimplemented bit, read as '0'	
-n = Value at POR	'1' = Bit is set	'0' = Bit is cleared	x = Bit is unknown

bit 7 **ECCPASE:** ECCP Auto-Shutdown Event Status bit
1 = A shutdown event has occurred; ECCP outputs are in shutdown state
0 = ECCP outputs are operating

bit 6-4 **ECCPAS<2:0>:** ECCP Auto-Shutdown Source Select bits
000 = Auto-shutdown is disabled
001 = Comparator 1 output
010 = Comparator 2 output
011 = Either Comparator 1 or 2
100 = INT0
101 = INT0 or Comparator 1
110 = INT0 or Comparator 2
111 = INT0 or Comparator 1 or Comparator 2

bit 3-2 **PSSAC<1:0>:** Pin A and C Shutdown State Control bits
00 = Drive Pins A and C to '0'
01 = Drive Pins A and C to '1'
1x = Pins A and C tri-state

bit 1-0 **PSSBD<1:0>:** Pin B and D Shutdown State Control bits
00 = Drive Pins B and D to '0'
01 = Drive Pins B and D to '1'
1x = Pins B and D tri-state

© 2007 Microchip Technology Inc.

16.4.5.1 Auto-Shutdown and Automatic Restart

The auto-shutdown feature can be configured to allow automatic restarts of the module following a shutdown event. This is enabled by setting the PRSEN bit of the PWM1CON register (PWM1CON<7>).

In Shutdown mode with PRSEN = 1 (Figure 16-10), the ECCPASE bit will remain set for as long as the cause of the shutdown continues. When the shutdown condition clears, the ECCPASE bit is cleared. If PRSEN = 0 (Figure 16-11), once a shutdown condition occurs, the ECCPASE bit will remain set until it is cleared by firmware. Once ECCPASE is cleared, the enhanced PWM will resume at the beginning of the next PWM period.

Note:	Writing to the ECCPASE bit is disabled while a shutdown condition is active.

Independent of the PRSEN bit setting, if the auto-shutdown source is one of the comparators, the shutdown condition is a level. The ECCPASE bit cannot be cleared as long as the cause of the shutdown persists.

The Auto-Shutdown mode can be forced by writing a '1' to the ECCPASE bit.

16.4.6 START-UP CONSIDERATIONS

When the ECCP module is used in the PWM mode, the application hardware must use the proper external pull-up and/or pull-down resistors on the PWM output pins. When the microcontroller is released from Reset, all of the I/O pins are in the high-impedance state. The external circuits must keep the power switch devices in the off state until the microcontroller drives the I/O pins with the proper signal levels or activates the PWM output(s).

The CCP1M1:CCP1M0 bits (CCP1CON<1:0>) allow the user to choose whether the PWM output signals are active-high or active-low for each pair of PWM output pins (P1A/P1C and P1B/P1D). The PWM output polarities must be selected before the PWM pins are configured as outputs. Changing the polarity configuration while the PWM pins are configured as outputs is not recommended since it may result in damage to the application circuits.

The P1A, P1B, P1C and P1D output latches may not be in the proper states when the PWM module is initialized. Enabling the PWM pins for output at the same time as the ECCP module may cause damage to the application circuit. The ECCP module must be enabled in the proper output mode and complete a full PWM cycle before configuring the PWM pins as outputs. The completion of a full PWM cycle is indicated by the TMR2IF bit being set as the second PWM period begins.

FIGURE 16-10: PWM AUTO-SHUTDOWN (PRSEN = 1, AUTO-RESTART ENABLED)

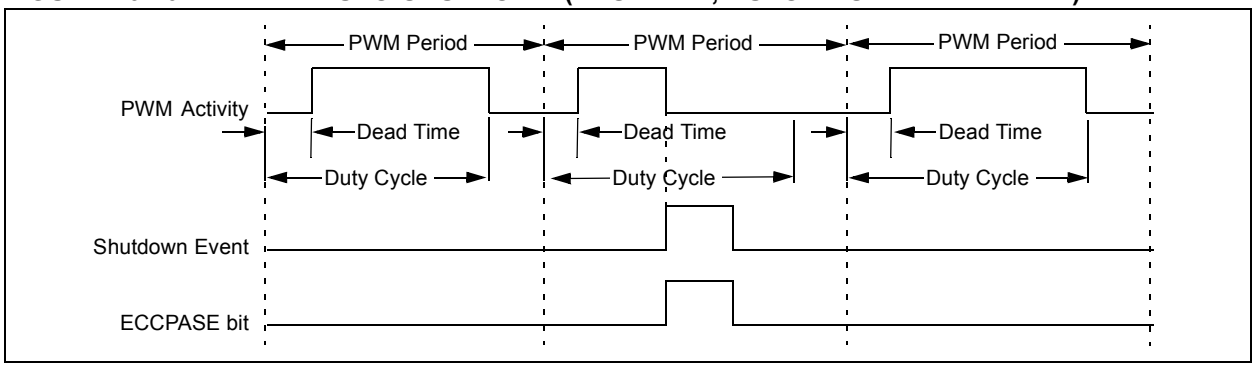

FIGURE 16-11: PWM AUTO-SHUTDOWN (PRSEN = 0, AUTO-RESTART DISABLED)

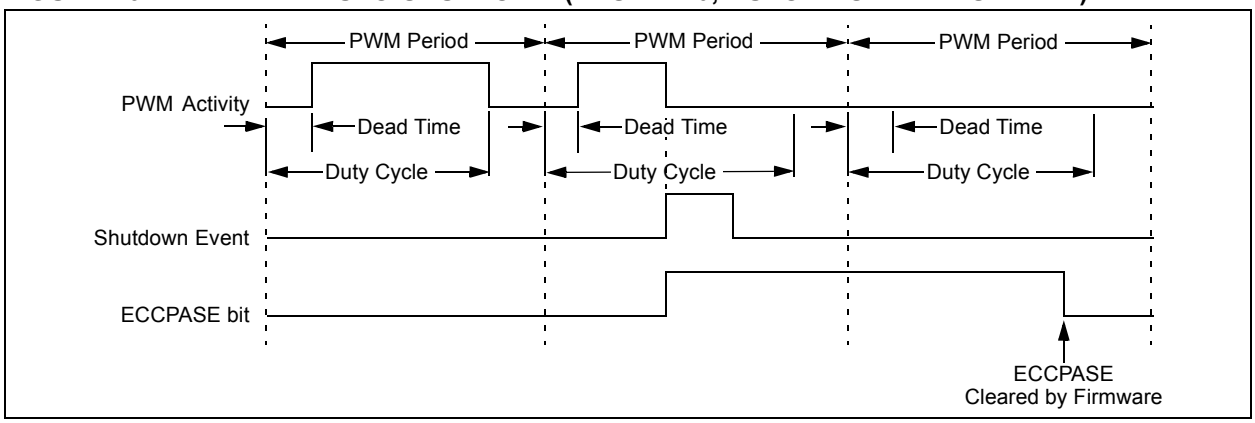

16.4.7 SETUP FOR PWM OPERATION

The following steps should be taken when configuring the ECCP module for PWM operation:

1. Configure the PWM pins P1A and P1B (and P1C and P1D, if used) as inputs by setting the corresponding TRISC and TRISD bits.
2. Set the PWM period by loading the PR2 register.
3. Configure the ECCP module for the desired PWM mode and configuration by loading the CCP1CON register with the appropriate values:
   - Select one of the available output configurations and direction with the P1M1:P1M0 bits.
   - Select the polarities of the PWM output signals with the CCP1M3:CCP1M0 bits.
4. Set the PWM duty cycle by loading the CCPR1L register and CCP1CON<5:4> bits.
5. For Half-Bridge Output mode, set the dead band delay by loading PWM1CON<6:0> with the appropriate value.
6. If auto-shutdown operation is required, load the ECCPAS register:
   - Select the auto-shutdown sources using the ECCPAS<2:0> bits.
   - Select the shutdown states of the PWM output pins using PSSAC1:PSSAC0 and PSSBD1:PSSBD0 bits.
   - Set the ECCPASE bit (ECCPAS<7>).
   - Configure the comparators using the CMCON register.
   - Configure the comparator inputs as analog inputs.
7. If auto-restart operation is required, set the PRSEN bit (PWM1CON<7>).
8. Configure and start TMR2:
   - Clear the TMR2 interrupt flag bit by clearing the TMR2IF bit (PIR1<1>).
   - Set the TMR2 prescale value by loading the T2CKPS bits (T2CON<1:0>).
   - Enable Timer2 by setting the TMR2ON bit (T2CON<2>).
9. Enable PWM outputs after a new PWM cycle has started:
   - Wait until TMR2 overflows (TMR2IF bit is set).
   - Enable the CCP1/P1A, P1B, P1C and/or P1D pin outputs by clearing the respective TRISC and TRISD bits.
   - Clear the ECCPASE bit (ECCPAS<7>).

16.4.8 OPERATION IN POWER-MANAGED MODES

In Sleep mode, all clock sources are disabled. Timer2 will not increment and the state of the module will not change. If the ECCP pin is driving a value, it will continue to drive that value. When the device wakes up, it will continue from this state. If Two-Speed Start-ups are enabled, the initial start-up frequency from INTOSC and the postscaler may not be stable immediately.

In PRI_IDLE mode, the primary clock will continue to clock the ECCP module without change.

In all other power-managed modes, the selected power-managed mode clock will clock Timer2. Other power-managed mode clocks will most likely be different than the primary clock frequency.

16.4.8.1 OPERATION WITH FAIL-SAFE CLOCK MONITOR

If the Fail-Safe Clock Monitor is enabled (CONFIG1H<6> is programmed), a clock failure will force the device into the power-managed RC_RUN mode and the OSCFIF bit (PIR2<7>) will be set. The ECCP will then be clocked from the internal oscillator clock source which may have a different clock frequency than the primary clock. By loading the IRCF2:IRCF0 bits on Resets, the user can obtain a frequency higher than the default INTRC clock source in the event of a clock failure.

See the previous section for additional details.

16.4.9 EFFECTS OF A RESET

Both Power-on and subsequent Resets will force all ports to Input mode and the CCP registers to their Reset states.

This forces the Enhanced CCP module to reset to a state compatible with the standard CCP module.

© 2007 Microchip Technology Inc.

TABLE 16-2: REGISTERS ASSOCIATED WITH ENHANCED PWM AND TIMER2

Name	Bit 7	Bit 6	Bit 5	Bit 4	Bit 3	Bit 2	Bit 1	Bit 0	Value on POR, BOR	Value on all other Resets
INTCON	GIE/GIEH	PEIE/GIEL	TMR0IE	INT0IE	RBIE	TMR0IF	INT0IF	RBIF	0000 000x	0000 000u
RCON	IPEN	—	—	$\overline{RI}$	$\overline{TO}$	$\overline{PD}$	$\overline{POR}$	$\overline{BOR}$	0--1 11q0	0--q qquu
PIR1	PSPIF	ADIF	RCIF	TXIF	SSPIF	CCP1IF	TMR2IF	TMR1IF	0000 0000	0000 0000
PIE1	PSPIE	ADIE	RCIE	TXIE	SSPIE	CCP1IE	TMR2IE	TMR1IE	0000 0000	0000 0000
IPR1	PSPIP	ADIP	RCIP	TXIP	SSPIP	CCP1IP	TMR2IP	TMR1IP	1111 1111	1111 1111
TMR2	Timer2 Module Register								0000 0000	0000 0000
PR2	Timer2 Module Period Register								1111 1111	1111 1111
T2CON	—	TOUTPS3	TOUTPS2	TOUTPS1	TOUTPS0	TMR2ON	T2CKPS1	T2CKPS0	-000 0000	-000 0000
TRISC	PORTC Data Direction Register								1111 1111	1111 1111
TRISD	PORTD Data Direction Register								1111 1111	1111 1111
CCPR1H	Enhanced Capture/Compare/PWM Register 1 High Byte								xxxx xxxx	uuuu uuuu
CCPR1L	Enhanced Capture/Compare/PWM Register 1 Low Byte								xxxx xxxx	uuuu uuuu
CCP1CON	P1M1	P1M0	DC1B1	DC1B0	CCP1M3	CCP1M2	CCP1M1	CCP1M0	0000 0000	0000 0000
ECCPAS	ECCPASE	ECCPAS2	ECCPAS1	ECCPAS0	PSSAC1	PSSAC0	PSSBD1	PSSBD0	0000 0000	0000 0000
PWM1CON	PRSEN	PDC6	PDC5	PDC4	PDC3	PDC2	PDC1	PDC0	0000 0000	0000 0000
OSCCON	IDLEN	IRCF2	IRCF1	IRCF0	OSTS	IOFS	SCS1	SCS0	0000 q000	0000 q000

Legend: x = unknown, u = unchanged, – = unimplemented, read as '0'.
Shaded cells are not used by the ECCP module in enhanced PWM mode.

NOTES:

© 2007 Microchip Technology Inc.

17.0 MASTER SYNCHRONOUS SERIAL PORT (MSSP) MODULE

17.1 Master SSP (MSSP) Module Overview

The Master Synchronous Serial Port (MSSP) module is a serial interface useful for communicating with other peripheral or microcontroller devices. These peripheral devices may be serial EEPROMs, shift registers, display drivers, A/D converters, etc. The MSSP module can operate in one of two modes:

- Serial Peripheral Interface (SPI)
- Inter-Integrated Circuit (I^2C)
  - Full Master mode
  - Slave mode (with general address call)

The I^2C interface supports the following modes in hardware:

- Master mode
- Multi-Master mode
- Slave mode

17.2 Control Registers

The MSSP module has three associated registers. These include a status register (SSPSTAT) and two control registers (SSPCON1 and SSPCON2). The use of these registers and their individual Configuration bits differ significantly, depending on whether the MSSP module is operated in SPI or I^2C mode.

Additional details are provided under the individual sections.

17.3 SPI Mode

The SPI mode allows 8 bits of data to be synchronously transmitted and received, simultaneously. All four modes of SPI are supported. To accomplish communication, typically three pins are used:

- Serial Data Out (SDO) – RC5/SDO
- Serial Data In (SDI) – RC4/SDI/SDA
- Serial Clock (SCK) – RC3/SCK/SCL

Additionally, a fourth pin may be used when in a Slave mode of operation:

- Slave Select ($\overline{SS}$) – RA5/AN4/$\overline{SS}$/LVDIN/C2OUT

Register 17-1 shows the block diagram of the MSSP module when operating in SPI mode.

FIGURE 17-1: MSSP BLOCK DIAGRAM (SPI MODE)

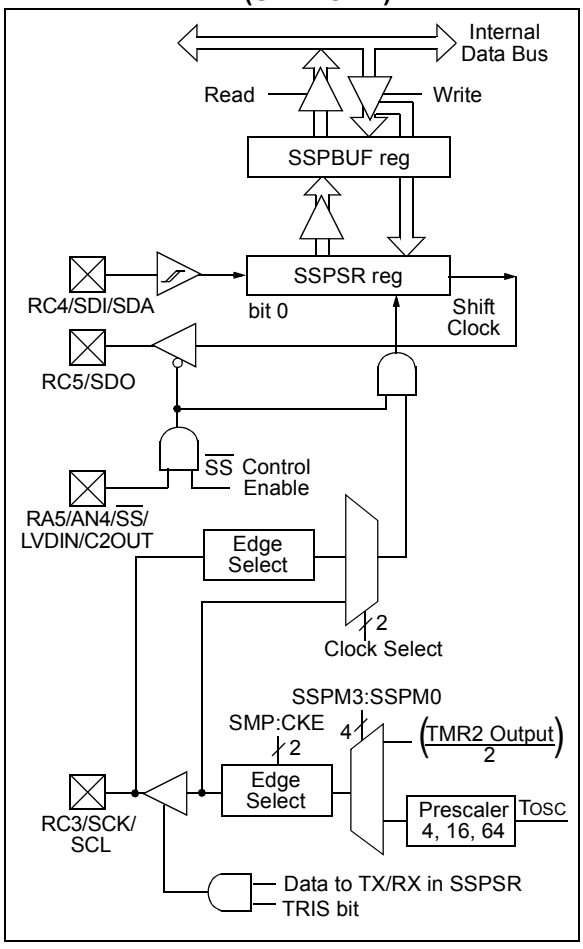

17.3.1 REGISTERS

The MSSP module has four registers for SPI mode operation. These are:

- MSSP Control Register 1 (SSPCON1)
- MSSP Status Register (SSPSTAT)
- Serial Receive/Transmit Buffer (SSPBUF)
- MSSP Shift Register (SSPSR) – Not directly accessible

SSPCON1 and SSPSTAT are the control and status registers in SPI mode operation. The SSPCON1 register is readable and writable. The lower six bits of the SSPSTAT are read-only. The upper two bits of the SSPSTAT are read/write.

SSPSR is the shift register used for shifting data in or out. SSPBUF is the buffer register to which data bytes are written to or read from.

In receive operations, SSPSR and SSPBUF together create a double-buffered receiver. When SSPSR receives a complete byte, it is transferred to SSPBUF and the SSPIF interrupt is set.

During transmission, the SSPBUF is not double-buffered. A write to SSPBUF will write to both SSPBUF and SSPSR.

REGISTER 17-1: SSPSTAT: MSSP STATUS REGISTER (SPI MODE)

R/W-0	R/W-0	R-0	R-0	R-0	R-0	R-0	R-0
SMP	CKE	D/$\overline{A}$	P	S	R/$\overline{W}$	UA	BF
bit 7							bit 0

Legend:			
R = Readable bit	W = Writable bit	U = Unimplemented bit, read as ‘0’	
-n = Value at POR	‘1’ = Bit is set	‘0’ = Bit is cleared	x = Bit is unknown

bit 7 **SMP:** Sample bit
SPI Master mode:
1 = Input data sampled at end of data output time
0 = Input data sampled at middle of data output time
SPI Slave mode:
SMP must be cleared when SPI is used in Slave mode.

bit 6 **CKE:** SPI Clock Edge Select bit
When CKP = 0:
1 = Data transmitted on rising edge of SCK
0 = Data transmitted on falling edge of SCK
When CKP = 1:
1 = Data transmitted on falling edge of SCK
0 = Data transmitted on rising edge of SCK

bit 5 **D/$\overline{A}$:** Data/$\overline{\text{Address}}$ bit
Used in I^2C mode only.

bit 4 **P:** Stop bit
Used in I^2C mode only.

bit 3 **S:** Start bit
Used in I^2C mode only.

bit 2 **R/$\overline{W}$:** Read/$\overline{\text{Write}}$ Information bit
Used in I^2C mode only.

bit 1 **UA:** Update Address bit
Used in I^2C mode only.

bit 0 **BF:** Buffer Full Status bit (Receive mode only)
1 = Receive complete, SSPBUF is full
0 = Receive not complete, SSPBUF is empty

© 2007 Microchip Technology Inc.

REGISTER 17-2: SSPCON1: MSSP CONTROL REGISTER 1 (SPI MODE)

R/W-0	R/W-0	R/W-0	R/W-0	R/W-0	R/W-0	R/W-0	R/W-0
WCOL	SSPOV(1)	SSPEN(2)	CKP	SSPM3(3)	SSPM2(3)	SSPM1(3)	SSPM0(3)
bit 7							bit 0

Legend:			
R = Readable bit	W = Writable bit	U = Unimplemented bit, read as '0'	
-n = Value at POR	'1' = Bit is set	'0' = Bit is cleared	x = Bit is unknown

bit 7 **WCOL:** Write Collision Detect bit (Transmit mode only)
- 1 = The SSPBUF register is written while it is still transmitting the previous word (must be cleared in software)
- 0 = No collision

bit 6 **SSPOV:** Receive Overflow Indicator bit(1)

SPI Slave mode:
- 1 = A new byte is received while the SSPBUF register is still holding the previous data. In case of overflow, the data in SSPSR is lost. Overflow can only occur in Slave mode. The user must read the SSPBUF, even if only transmitting data, to avoid setting overflow (must be cleared in software).
- 0 = No overflow

bit 5 **SSPEN:** Master Synchronous Serial Port Enable bit(2)
- 1 = Enables serial port and configures SCK, SDO, SDI and $\overline{SS}$ as serial port pins
- 0 = Disables serial port and configures these pins as I/O port pins

bit 4 **CKP:** Clock Polarity Select bit
- 1 = Idle state for clock is a high level
- 0 = Idle state for clock is a low level

bit 3-0 **SSPM3:SSPM0:** Master Synchronous Serial Port Mode Select bits(3)
- 0101 = SPI Slave mode, clock = SCK pin, $\overline{SS}$ pin control disabled, $\overline{SS}$ can be used as I/O pin
- 0100 = SPI Slave mode, clock = SCK pin, $\overline{SS}$ pin control enabled
- 0011 = SPI Master mode, clock = TMR2 output/2
- 0010 = SPI Master mode, clock = FOSC/64
- 0001 = SPI Master mode, clock = FOSC/16
- 0000 = SPI Master mode, clock = FOSC/4

Note 1: In Master mode, the overflow bit is not set since each new reception (and transmission) is initiated by writing to the SSPBUF register.

2: When the MSSP is enabled in SPI mode, these pins must be properly configured as input or output.

3: Bit combinations not specifically listed here are either reserved or implemented in I^2C™ mode only.

17.3.2 OPERATION

When initializing the SPI, several options need to be specified. This is done by programming the appropriate control bits (SSPCON1<5:0> and SSPSTAT<7:6>). These control bits allow the following to be specified:

- Master mode (SCK is the clock output)
- Slave mode (SCK is the clock input)
- Clock Polarity (Idle state of SCK)
- Data Input Sample Phase (middle or end of data output time)
- Clock Edge (output data on rising/falling edge of SCK)
- Clock Rate (Master mode only)
- Slave Select mode (Slave mode only)

The MSSP consists of a Transmit/Receive Shift register (SSPSR) and a Buffer register (SSPBUF). The SSPSR shifts the data in and out of the device, MSb first. The SSPBUF holds the data that was written to the SSPSR until the received data is ready. Once the 8 bits of data have been received, that byte is moved to the SSPBUF register. Then the Buffer Full Detect bit, BF (SSPSTAT<0>), and the interrupt flag bit, SSPIF, are set. This double-buffering of the received data (SSPBUF) allows the next byte to start reception before reading the data that was just received. Any write to the SSPBUF register during transmission/reception of data will be ignored and the Write Collision Detect bit, WCOL (SSPCON1<7>), will be set. User software must clear the WCOL bit so that it can be determined if the following write(s) to the SSPBUF register completed successfully.

When the application software is expecting to receive valid data, the SSPBUF should be read before the next byte of data to transfer is written to the SSPBUF. Buffer Full bit, BF (SSPSTAT<0>), indicates when SSPBUF has been loaded with the received data (transmission is complete). When the SSPBUF is read, the BF bit is cleared. This data may be irrelevant if the SPI is only a transmitter. Generally, the MSSP interrupt is used to determine when the transmission/reception has completed. The SSPBUF must be read and/or written. If the interrupt method is not going to be used, then software polling can be done to ensure that a write collision does not occur. Example 17-1 shows the loading of the SSPBUF (SSPSR) for data transmission.

The SSPSR is not directly readable or writable and can only be accessed by addressing the SSPBUF register. Additionally, the MSSP Status register (SSPSTAT) indicates the various status conditions.

EXAMPLE 17-1: LOADING THE SSPBUF (SSPSR) REGISTER

```
LOOP    BTFSS   SSPSTAT, BF     ;Has data been received(transmit complete)?
        BRA     LOOP            ;No
        MOVF    SSPBUF, W       ;WREG reg = contents of SSPBUF

        MOVWF   RXDATA          ;Save in user RAM, if data is meaningful

        MOVF    TXDATA, W       ;W reg = contents of TXDATA
        MOVWF   SSPBUF          ;New data to xmit
```


© 2007 Microchip Technology Inc.

17.3.3 ENABLING SPI I/O

To enable the serial port, MSSP Enable bit, SSPEN (SSPCON1<5>), must be set. To reset or reconfigure SPI mode, clear the SSPEN bit, re-initialize the SSPCON registers and then set the SSPEN bit. This configures the SDI, SDO, SCK and $\overline{SS}$ pins as serial port pins. For the pins to behave as the serial port function, some must have their data direction bits (in the TRIS register) appropriately programmed. That is:

- SDI must have TRISC<4> bit cleared
- SDO must have TRISC<5> bit cleared
- SCK (Master mode) must have TRISC<3> bit cleared
- SCK (Slave mode) must have TRISC<3> bit set
- $\overline{SS}$ must have TRISA<5> bit set

Any serial port function that is not desired may be overridden by programming the corresponding data direction (TRIS) register to the opposite value.

17.3.4 TYPICAL CONNECTION

Register 17-2 shows a typical connection between two microcontrollers. The master controller (Processor 1) initiates the data transfer by sending the SCK signal. Data is shifted out of both shift registers on their programmed clock edge and latched on the opposite edge of the clock. Both processors should be programmed to the same Clock Polarity (CKP), then both controllers would send and receive data at the same time. Whether the data is meaningful (or dummy data) depends on the application software. This leads to three scenarios for data transmission:

- Master sends data – Slave sends dummy data
- Master sends data – Slave sends data
- Master sends dummy data – Slave sends data

FIGURE 17-2: SPI MASTER/SLAVE CONNECTION

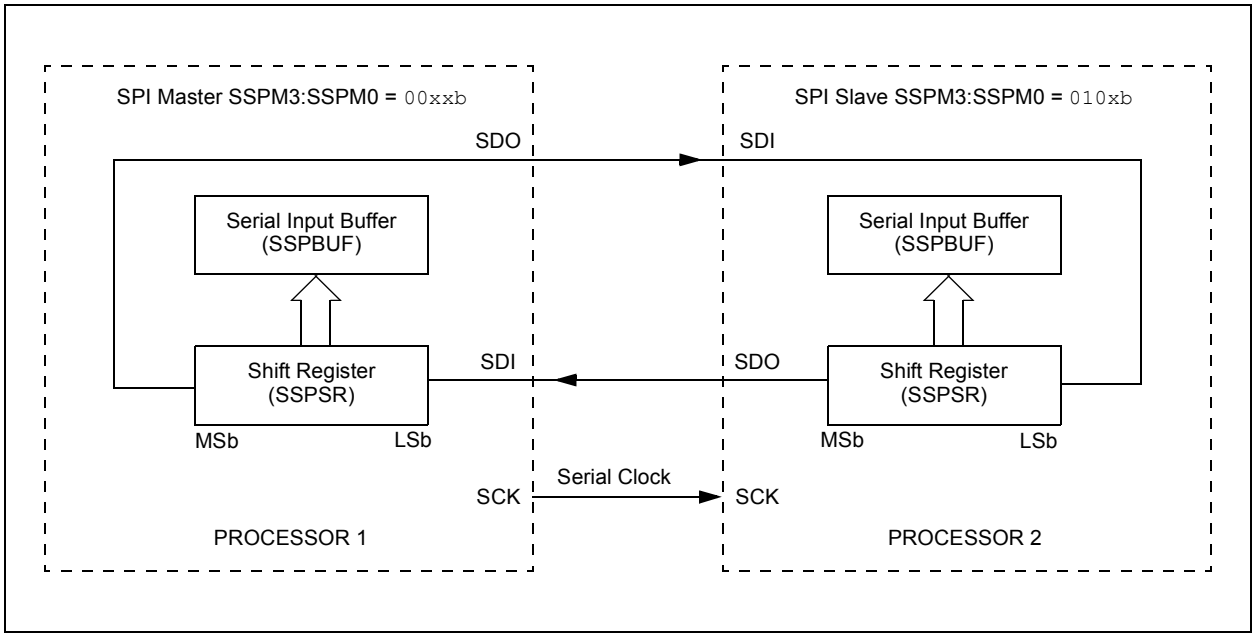

17.3.5 MASTER MODE

The master can initiate the data transfer at any time because it controls the SCK. The master determines when the slave (Processor 2, Figure 17-2) is to broadcast data by the software protocol.

In Master mode, the data is transmitted/received as soon as the SSPBUF register is written to. If the SPI is only going to receive, the SDO output could be disabled (programmed as an input). The SSPSR register will continue to shift in the signal present on the SDI pin at the programmed clock rate. As each byte is received, it will be loaded into the SSPBUF register as if a normal received byte (interrupts and status bits appropriately set). This could be useful in receiver applications as a “Line Activity Monitor” mode.

The clock polarity is selected by appropriately programming the CKP bit (SSPCON1<4>). This then, would give waveforms for SPI communication, as shown in Figure 17-3, Figure 17-5 and Figure 17-6, where the MSB is transmitted first. In Master mode, the SPI clock rate (bit rate) is user-programmable to be one of the following:

- FOSC/4 (or TCY)
- FOSC/16 (or 4 • TCY)
- FOSC/64 (or 16 • TCY)
- (Timer2 output)/2

The maximum data rate is approximately 3.0 Mbps, limited by timing requirements (see Table 26-14 through Table 26-17).

Figure 17-3 shows the waveforms for Master mode. When the CKE bit is set, the SDO data is valid before there is a clock edge on SCK. The change of the input sample is shown based on the state of the SMP bit. The time when the SSPBUF is loaded with the received data is shown.

FIGURE 17-3: SPI MODE WAVEFORM (MASTER MODE)

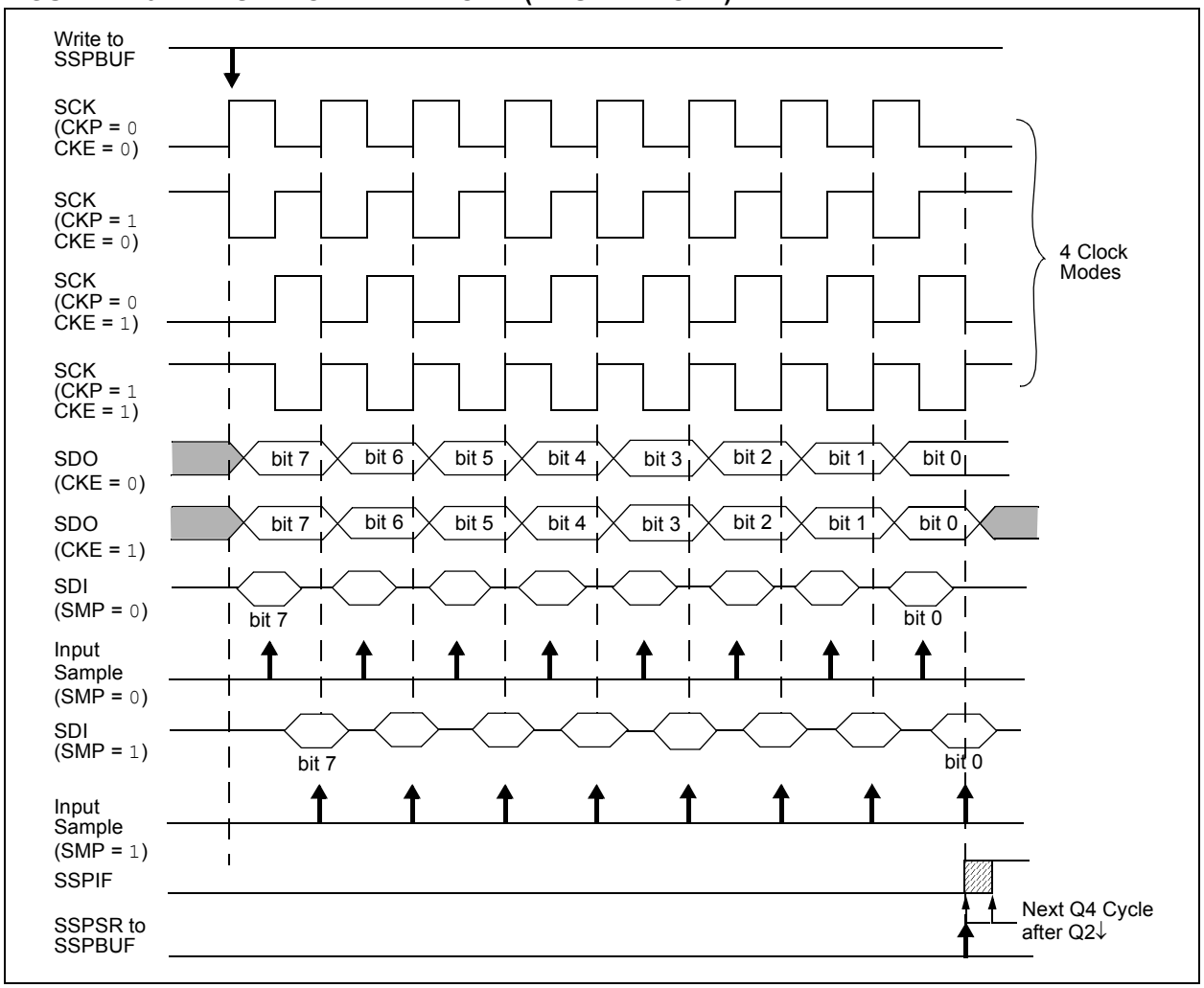

© 2007 Microchip Technology Inc.

17.3.6 SLAVE MODE

In Slave mode, the data is transmitted and received as the external clock pulses appear on SCK. When the last bit is latched, the SSPIF interrupt flag bit is set.

While in Slave mode, the external clock is supplied by the external clock source on the SCK pin. This external clock must meet the minimum high and low times as specified in the electrical specifications.

While in power-managed modes, the slave can transmit/receive data. When a byte is received, the device will wake-up from power-managed modes.

17.3.7 SLAVE SELECT CONTROL

The $\overline{SS}$ pin allows a master controller to select one of several slave controllers for communications in systems with more than one slave. The SPI must be in Slave mode with $\overline{SS}$ pin control enabled (SSPCON1<3:0> = 04h). The $\overline{SS}$ pin is configured for input by setting TRISA<5>. When the $\overline{SS}$ pin is low, transmission and reception are enabled and the SDO pin is driven. When the $\overline{SS}$ pin goes high, the SDO pin is tri-stated, even if in the middle of a transmitted byte. External pull-up/pull-down resistors may be desirable, depending on the application.

Note 1:	When the SPI is in Slave mode with $\overline{SS}$ pin control enabled (SSPCON1<3:0> = 0100), the SPI module will reset when the $\overline{SS}$ pin is set high.
2:	If the SPI is used in Slave mode with CKE set, then the $\overline{SS}$ pin control must be enabled.

When the SPI module resets, SSPSR is cleared. This can be done by either driving the $\overline{SS}$ pin to a high level or clearing the SSPEN bit.

To emulate two-wire communication, the SDO pin can be connected to the SDI pin. When the SPI needs to operate as a receiver the SDO pin can be configured as an input. This disables transmissions from the SDO. The SDI can always be left as an input (SDI function) since it cannot create a bus conflict.

FIGURE 17-4: SLAVE SYNCHRONIZATION WAVEFORM

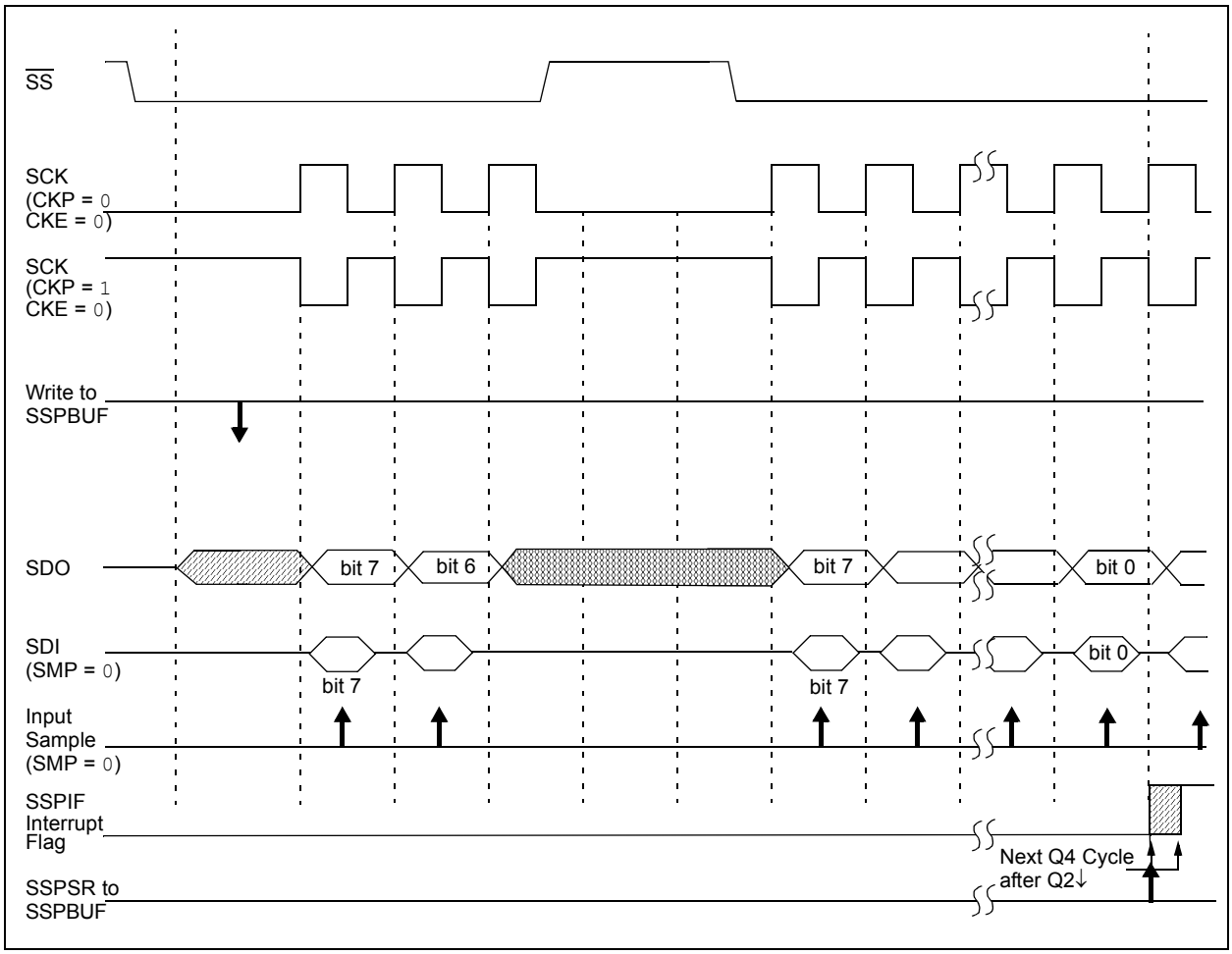

FIGURE 17-5: SPI MODE WAVEFORM (SLAVE MODE WITH CKE = 0)

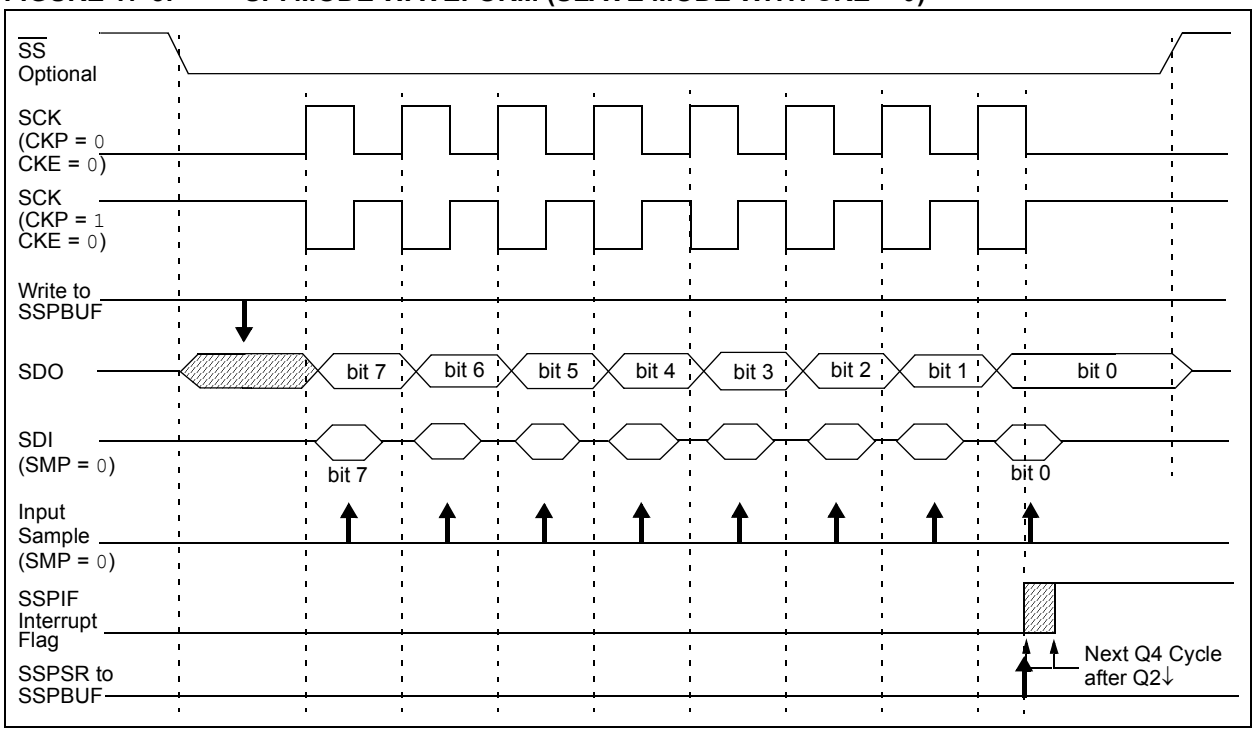

FIGURE 17-6: SPI MODE WAVEFORM (SLAVE MODE WITH CKE = 1)

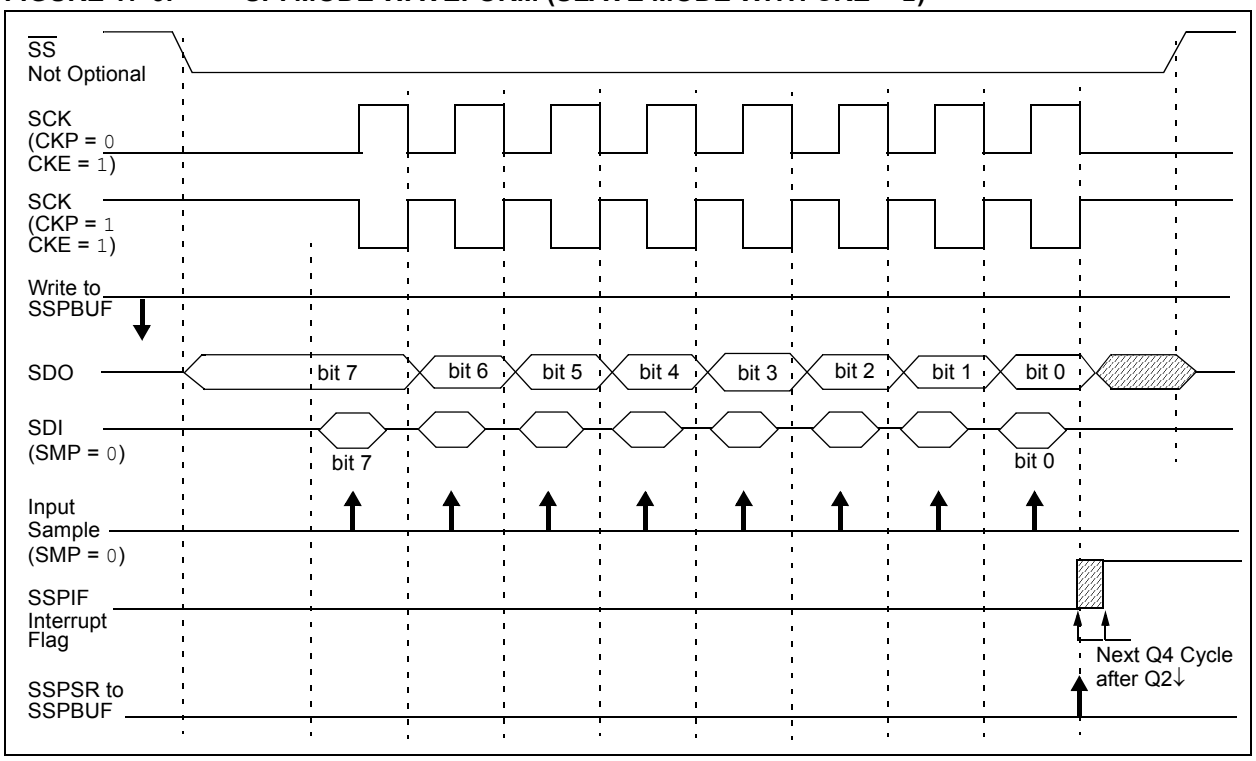

© 2007 Microchip Technology Inc.

17.3.8 MASTER IN POWER-MANAGED MODES

In Master mode, module clocks may be operating at a different speed than when in full-power mode, or in the case of the power-managed Sleep mode, all clocks are halted.

In most power-managed modes, a clock is provided to the peripherals and is derived from the primary clock source, the secondary clock (Timer1 oscillator at 32.768 kHz) or the internal oscillator block (one of eight frequencies between 31 kHz and 8 MHz). See **Section 2.7 "Clock Sources and Oscillator Switching"** for additional information.

In most cases, the speed that the master clocks SPI data is not important; however, this should be evaluated for each system.

If MSSP interrupts are enabled, they can wake the controller from a power-managed mode when the master completes sending data. If an exit from a power-managed mode is not desired, MSSP interrupts should be disabled.

If the Sleep mode is selected, all module clocks are halted and the transmission/reception will pause until the device wakes from the power-managed mode. After the device returns to full-power mode, the module will resume transmitting and receiving data.

17.3.8.1 Slave in Power-Managed Modes

In Slave mode, the SPI Transmit/Receive Shift register operates asynchronously to the device. This allows the device to be placed in any power-managed mode and data to be shifted into the SPI Transmit/Receive Shift register. When all 8 bits have been received, the MSSP interrupt flag bit will be set and if MSSP interrupts are enabled, will wake the device from a power-managed mode.

17.3.9 EFFECTS OF A RESET

A Reset disables the MSSP module and terminates the current transfer.

17.3.10 BUS MODE COMPATIBILITY

Table 17-1 shows the compatibility between the standard SPI modes and the states of the CKP and CKE control bits.

TABLE 17-1: SPI BUS MODES

Standard SPI Mode Terminology	Control Bits State	
	CKP	CKE
0, 0	0	1
0, 1	0	0
1, 0	1	1
1, 1	1	0

There is also an SMP bit which controls when the data is sampled.

TABLE 17-2: REGISTERS ASSOCIATED WITH SPI OPERATION

Name	Bit 7	Bit 6	Bit 5	Bit 4	Bit 3	Bit 2	Bit 1	Bit 0	Value on POR, BOR	Value on all other Resets
INTCON	GIE/GIEH	PEIE/ GIEL	TMR0IE	INT0IE	RBIE	TMR0IF	INT0IF	RBIF	0000 000x	0000 000u
PIR1	PSPIF(1)	ADIF	RCIF	TXIF	SSPIF	CCP1IF	TMR2IF	TMR1IF	0000 0000	0000 0000
PIE1	PSPIE(1)	ADIE	RCIE	TXIE	SSPIE	CCP1IE	TMR2IE	TMR1IE	0000 0000	0000 0000
IPR1	PSPIP(1)	ADIP	RCIP	TXIP	SSPIP	CCP1IP	TMR2IP	TMR1IP	1111 1111	1111 1111
TRISC	PORTC Data Direction Register								1111 1111	1111 1111
SSPBUF	MSSP Receive Buffer/Transmit Register								xxxx xxxx	uuuu uuuu
SSPCON1	WCOL	SSPOV	SSPEN	CKP	SSPM3	SSPM2	SSPM1	SSPM0	0000 0000	0000 0000
TRISA	TRISA7(1)	TRISA6(1)	PORTA Data Direction Register						--11 1111	--11 1111
SSPSTAT	SMP	CKE	D/$\overline{A}$	P	S	R/$\overline{W}$	UA	BF	0000 0000	0000 0000

Legend: x = unknown, u = unchanged, - = unimplemented, read as '0'. Shaded cells are not used by the MSSP in SPI mode.
Note 1: The PSPIF, PSPIE and PSPIP bits are reserved on the PIC18F2X20 devices; always maintain these bits clear.

17.4 I²C Mode

The MSSP module in I²C mode fully implements all master and slave functions (including general call support) and provides interrupts on Start and Stop bits in hardware to determine a free bus (multi-master function). The MSSP module implements the standard mode specifications, as well as 7-bit and 10-bit addressing.

Two pins are used for data transfer:

- Serial Clock (SCL) – RC3/SCK/SCL
- Serial Data (SDA) – RC4/SDI/SDA

The user must configure these pins as inputs using the TRISC<4:3> bits.

FIGURE 17-7: MSSP BLOCK DIAGRAM (I²C MODE)

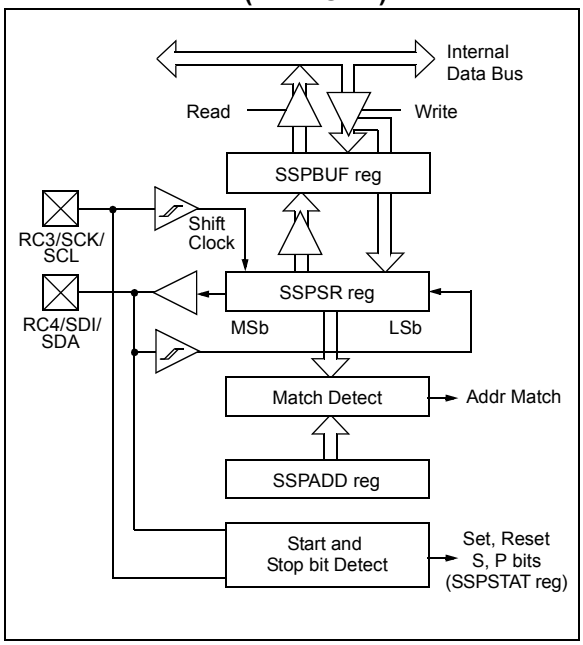

17.4.1 REGISTERS

The MSSP module has six registers for I²C operation. These are:

- MSSP Control Register 1 (SSPCON1)
- MSSP Control Register 2 (SSPCON2)
- MSSP Status Register (SSPSTAT)
- Serial Receive/Transmit Buffer (SSPBUF)
- MSSP Shift Register (SSPSR) – Not directly accessible
- MSSP Address Register (SSPADD)

SSPCON1, SSPCON2 and SSPSTAT are the control and status registers in I²C mode operation. The SSPCON1 and SSPCON2 registers are readable and writable. The lower six bits of the SSPSTAT are read-only. The upper two bits of the SSPSTAT are read/write.

SSPSR is the shift register used for shifting data in or out. SSPBUF is the buffer register to which data bytes are written to or read from.

SSPADD register holds the slave device address when the MSSP is configured in I²C Slave mode. When the MSSP is configured in Master mode, the lower seven bits of SSPADD act as the Baud Rate Generator reload value.

In receive operations, SSPSR and SSPBUF together create a double-buffered receiver. When SSPSR receives a complete byte, it is transferred to SSPBUF and the SSPIF interrupt is set.

During transmission, the SSPBUF is not double-buffered. A write to SSPBUF will write to both SSPBUF and SSPSR.

© 2007 Microchip Technology Inc.

REGISTER 17-3: SSPSTAT: MSSP STATUS REGISTER (I²C™ MODE)

R/W-0	R/W-0	R-0	R-0	R-0	R-0	R-0	R-0
SMP	CKE	D/$\overline{A}$	P(1)	S(2)	R/$\overline{W}$	UA	BF
bit 7							bit 0

Legend:			
R = Readable bit	W = Writable bit	U = Unimplemented bit, read as '0'	
-n = Value at POR	'1' = Bit is set	'0' = Bit is cleared	x = Bit is unknown

bit 7 **SMP:** Slew Rate Control bit

In Master or Slave mode:
1 = Slew rate control disabled
0 = Slew rate control enabled

bit 6 **CKE:** SMBus Select bit

In Master or Slave mode:
1 = Enable SMBus specific inputs
0 = Disable SMBus specific inputs

bit 5 **D/$\overline{A}$:** Data/$\overline{\text{Address}}$ bit

In Master mode:
Reserved.

In Slave mode:
1 = Indicates that the last byte received or transmitted was data
0 = Indicates that the last byte received or transmitted was address

bit 4 **P:** Stop bit(1)

1 = Indicates that a Stop bit has been detected last
0 = Stop bit was not detected last

bit 3 **S:** Start bit(2)

1 = Indicates that a Start bit has been detected last
0 = Start bit was not detected last

bit 2 **R/$\overline{W}$:** Read/$\overline{\text{Write}}$ bit Information (I²C mode only)

In Slave mode:(3)
1 = Read
0 = Write

In Master mode:(4)
1 = Transmit is in progress
0 = Transmit is not in progress

bit 1 **UA:** Update Address bit (10-Bit Slave mode only)

1 = Indicates that the user needs to update the address in the SSPADD register
0 = Address does not need to be updated

bit 0 **BF:** Buffer Full Status bit

In Transmit mode:
1 = Data transmit in progress (does not include the $\overline{\text{ACK}}$ and Stop bits), SSPBUF is full
0 = Data transmit complete (does not include the $\overline{\text{ACK}}$ and Stop bits), SSPBUF is empty

In Receive mode:
1 = Receive complete, SSPBUF is full
0 = Receive not complete, SSPBUF is empty

Note 1: This bit is cleared on Reset when SSPEN is cleared or a Start bit has been detected.

2: This bit is cleared on Reset when SSPEN is cleared or a Stop bit has been detected.

3: This bit holds the R/W bit information following the last address match. This bit is only valid from the address match to the next Start bit, Stop bit or not $\overline{\text{ACK}}$ bit.

4: ORing this bit with the SSPCON2 bits, SEN, RSEN, PEN, RCEN or ACKEN will indicate if the MSSP is in Idle mode.

REGISTER 17-4: SSPCON1: MSSP CONTROL REGISTER 1 (I²C™ MODE)

R/W-0	R/W-0	R/W-0	R/W-0	R/W-0	R/W-0	R/W-0	R/W-0
WCOL	SSPOV	SSPEN(1)	CKP	SSPM3(2)	SSPM2(2)	SSPM1(2)	SSPM0(2)
bit 7							bit 0

Legend:			
R = Readable bit	W = Writable bit	U = Unimplemented bit, read as '0'	
-n = Value at POR	'1' = Bit is set	'0' = Bit is cleared	x = Bit is unknown

bit 7 **WCOL:** Write Collision Detect bit

In Master Transmit mode:
1 = A write to the SSPBUF register was attempted while the I²C conditions were not valid for a transmission to be started (must be cleared in software)
0 = No collision

In Slave Transmit mode:
1 = The SSPBUF register is written while it is still transmitting the previous word (must be cleared in software)
0 = No collision

In Receive mode (Master or Slave modes):
This is a "don't care" bit.

bit 6 **SSPOV:** Receive Overflow Indicator bit

In Receive mode:
1 = A byte is received while the SSPBUF register is still holding the previous byte (must be cleared in software)
0 = No overflow

In Transmit mode:
This is a "don't care" bit in Transmit mode.

bit 5 **SSPEN:** Master Synchronous Serial Port Enable bit(1)
1 = Enables the serial port and configures the SDA and SCL pins as the serial port pins
0 = Disables serial port and configures these pins as I/O port pins

bit 4 **CKP:** SCK Release Control bit

In Slave mode:
1 = Release clock
0 = Holds clock low (clock stretch), used to ensure data setup time

In Master mode:
Unused in this mode.

bit 3-0 **SSPM3:SSPM0:** Master Synchronous Serial Port Mode Select bits(2)
1111 = I²C Slave mode, 10-bit address with Start and Stop bit interrupts enabled
1110 = I²C Slave mode, 7-bit address with Start and Stop bit interrupts enabled
1011 = I²C Firmware Controlled Master mode (slave Idle)
1000 = I²C Master mode, clock = FOSC/(4 * (SSPADD + 1))
0111 = I²C Slave mode, 10-bit address(2)
0110 = I²C Slave mode, 7-bit address(2)

Note 1: When enabled, the SDA and SCL pins must be properly configured as input or output.
2: Bit combinations not specifically listed here are either reserved or implemented in SPI mode only.

© 2007 Microchip Technology Inc.

REGISTER 17-5: SSPCON2: MSSP CONTROL REGISTER 2 (I^2C™ MODE)

R/W-0	R/W-0	R/W-0	R/W-0	R/W-0	R/W-0	R/W-0	R/W-0
GCEN	ACKSTAT	ACKDT(1)	ACKEN	RCEN	PEN	RSEN	SEN
bit 7							bit 0

Legend:			
R = Readable bit	W = Writable bit	U = Unimplemented bit, read as '0'	
-n = Value at POR	'1' = Bit is set	'0' = Bit is cleared	x = Bit is unknown

bit 7 **GCEN:** General Call Enable bit (Slave mode only)
1 = Enable interrupt when a general call address (0000h) is received in the SSPSR
0 = General call address disabled

bit 6 **ACKSTAT:** Acknowledge Status bit (Master Transmit mode only)
1 = Acknowledge was not received from slave
0 = Acknowledge was received from slave

bit 5 **ACKDT:** Acknowledge Data bit (Master Receive mode only)(1)
1 = Not Acknowledge
0 = Acknowledge

bit 4 **ACKEN:** Acknowledge Sequence Enable bit (Master Receive mode only)
1 = Initiate Acknowledge sequence on SDA and SCL pins and transmit ACKDT data bit. Automatically cleared by hardware.
0 = Acknowledge sequence Idle

bit 3 **RCEN:** Receive Enable bit (Master Receive mode only)
1 = Enables Receive mode for I^2C
0 = Receive Idle

bit 2 **PEN:** Stop Condition Enable bit (Master mode only)
1 = Initiate Stop condition on SDA and SCL pins. Automatically cleared by hardware.
0 = Stop condition Idle

bit 1 **RSEN:** Repeated Start Condition Enabled bit (Master mode only)
1 = Initiate Repeated Start condition on SDA and SCL pins. Automatically cleared by hardware.
0 = Repeated Start condition Idle

bit 0 **SEN:** Start Condition Enabled/Stretch Enabled bit
In Master mode:
1 = Initiate Start condition on SDA and SCL pins. Automatically cleared by hardware.
0 = Start condition Idle
In Slave mode:
1 = Clock stretching is enabled for both Slave Transmit and Slave Receive (stretch enabled)
0 = Clock stretching is disabled

Note 1: Value that will be transmitted when the user initiates an Acknowledge sequence at the end of a receive.

17.4.2 OPERATION

The MSSP module functions are enabled by setting MSSP Enable bit, SSPEN (SSPCON1<5>).

The SSPCON1 register allows control of the I^2C operation. Four mode selection bits (SSPCON1<3:0>) allow one of the following I^2C modes to be selected:

- I^2C Master mode, clock = FOSC/(4 * (SSPADD + 1))
- I^2C Slave mode (7-bit address)
- I^2C Slave mode (10-bit address)
- I^2C Slave mode (7-bit address), with Start and Stop bit interrupts enabled
- I^2C Slave mode (10-bit address), with Start and Stop bit interrupts enabled
- I^2C Firmware Controlled Master mode, slave is Idle

Selection of any I^2C mode, with the SSPEN bit set, forces the SCL and SDA pins to be open-drain, provided these pins are programmed to inputs by setting the appropriate TRISC bits. To ensure proper operation of the module, pull-up resistors must be provided externally to the SCL and SDA pins.

17.4.3 SLAVE MODE

In Slave mode, the SCL and SDA pins must be configured as inputs (TRISC<4:3> set). The MSSP module will override the input state with the output data when required (slave-transmitter).

The I^2C Slave mode hardware will always generate an interrupt on an address match. Through the mode select bits, the user can also choose to interrupt on Start and Stop bits.

When an address is matched, or the data transfer after an address match is received, the hardware automatically will generate the Acknowledge ($\overline{ACK}$) pulse and load the SSPBUF register with the received value currently in the SSPSR register.

Any combination of the following conditions will cause the MSSP module not to give this $\overline{ACK}$ pulse:

- The Buffer Full bit, BF (SSPSTAT<0>), was set before the transfer was received.
- The overflow bit, SSPOV (SSPCON1<6>), was set before the transfer was received.

In this case, the SSPSR register value is not loaded into the SSPBUF but bit SSPIF (PIR1<3>) is set. The BF bit is cleared by reading the SSPBUF register, while bit SSPOV is cleared by software.

The SCL clock input must have a minimum high and low for proper operation. The high and low times of the I^2C specification, as well as the requirement of the MSSP module, are shown in timing parameter #100 and parameter #101.

17.4.3.1 Addressing

Once the MSSP module has been enabled, it waits for a Start condition to occur. Following the Start condition, the 8 bits are shifted into the SSPSR register. All incoming bits are sampled with the rising edge of the clock (SCL) line. The value of register SSPSR<7:1> is compared to the value of the SSPADD register. The address is compared on the falling edge of the eighth clock (SCL) pulse. If the addresses match and the BF and SSPOV bits are clear, the following events occur:

1. The SSPSR register value is loaded into the SSPBUF register.
2. The Buffer Full bit, BF, is set.
3. An $\overline{ACK}$ pulse is generated.
4. MSSP Interrupt Flag bit, SSPIF (PIR1<3>), is set (interrupt is generated if enabled) on the falling edge of the ninth SCL pulse.

In 10-Bit Addressing mode, two address bytes need to be received by the slave. The five Most Significant bits (MSbs) of the first address byte specify if this is a 10-bit address. Bit R/$\overline{W}$ (SSPSTAT<2>) must specify a write so the slave device will receive the second address byte. For a 10-bit address, the first byte would equal '11110 A9 A8 0', where 'A9' and 'A8' are the two MSbs of the address. The sequence of events for 10-bit addressing is as follows, with steps 7 through 9 for the slave-transmitter:

1. Receive first (high) byte of address (bits SSPIF, BF and bit UA (SSPSTAT<1>) are set).
2. Update the SSPADD register with second (low) byte of Address (clears bit, UA, and releases the SCL line).
3. Read the SSPBUF register (clears bit, BF) and clear flag bit, SSPIF.
4. Receive second (low) byte of address (bits, SSPIF, BF and UA, are set).
5. Update the SSPADD register with the first (high) byte of address. If match releases SCL line, this will clear bit, UA.
6. Read the SSPBUF register (clears bit, BF) and clear flag bit, SSPIF.
7. Receive Repeated Start condition.
8. Receive first (high) byte of address (bits, SSPIF and BF, are set).
9. Read the SSPBUF register (clears bit, BF) and clear flag bit, SSPIF.

© 2007 Microchip Technology Inc.

17.4.3.2 Reception

When the R/$\overline{W}$ bit of the address byte is clear and an address match occurs, the R/$\overline{W}$ bit of the SSPSTAT register is cleared. The received address is loaded into the SSPBUF register and the SDA line is held low ($\overline{ACK}$).

When the address byte overflow condition exists, then the no Acknowledge ($\overline{ACK}$) pulse is given. An overflow condition is defined as either bit, BF (SSPSTAT<0>), is set or bit, SSPOV (SSPCON1<6>), is set.

An MSSP interrupt is generated for each data transfer byte. Flag bit, SSPIF (PIR1<3>), must be cleared in software. The SSPSTAT register is used to determine the status of the byte.

If SEN is enabled (SSPCON2<0> = 1), RC3/SCK/SCL will be held low (clock stretch) following each data transfer. The clock must be released by setting bit, CKP (SSPCON1<4>). See **Section 17.4.4 "Clock Stretching"** for more detail.

17.4.3.3 Transmission

When the R/$\overline{W}$ bit of the incoming address byte is set and an address match occurs, the R/$\overline{W}$ bit of the SSPSTAT register is set. The received address is loaded into the SSPBUF register. The $\overline{ACK}$ pulse will be sent on the ninth bit and pin RC3/SCK/SCL is held low regardless of SEN (see **Section 17.4.4 "Clock Stretching"** for more detail). By stretching the clock, the master will be unable to assert another clock pulse until the slave is done preparing the transmit data. The transmit data must be loaded into the SSPBUF register which also loads the SSPSR register. Then the RC3/SCK/SCL pin should be enabled by setting bit, CKP (SSPCON1<4>). The eight data bits are shifted out on the falling edge of the SCL input. This ensures that the SDA signal is valid during the SCL high time (Figure 17-9).

The $\overline{ACK}$ pulse from the master-receiver is latched on the rising edge of the ninth SCL input pulse. If the SDA line is high (not $\overline{ACK}$), then the data transfer is complete. In this case, when the $\overline{ACK}$ is latched by the slave, the slave logic is reset (resets SSPSTAT register) and the slave monitors for another occurrence of the Start bit. If the SDA line was low ($\overline{ACK}$), the next transmit data must be loaded into the SSPBUF register. Again, the RC3/SCK/SCL pin must be enabled by setting bit, CKP.

An MSSP interrupt is generated for each data transfer byte. The SSPIF bit must be cleared in software and the SSPSTAT register is used to determine the status of the byte. The SSPIF bit is set on the falling edge of the ninth clock pulse.

FIGURE 17-8: I²C™ SLAVE MODE TIMING WITH SEN = 0 (RECEPTION, 7-BIT ADDRESS)

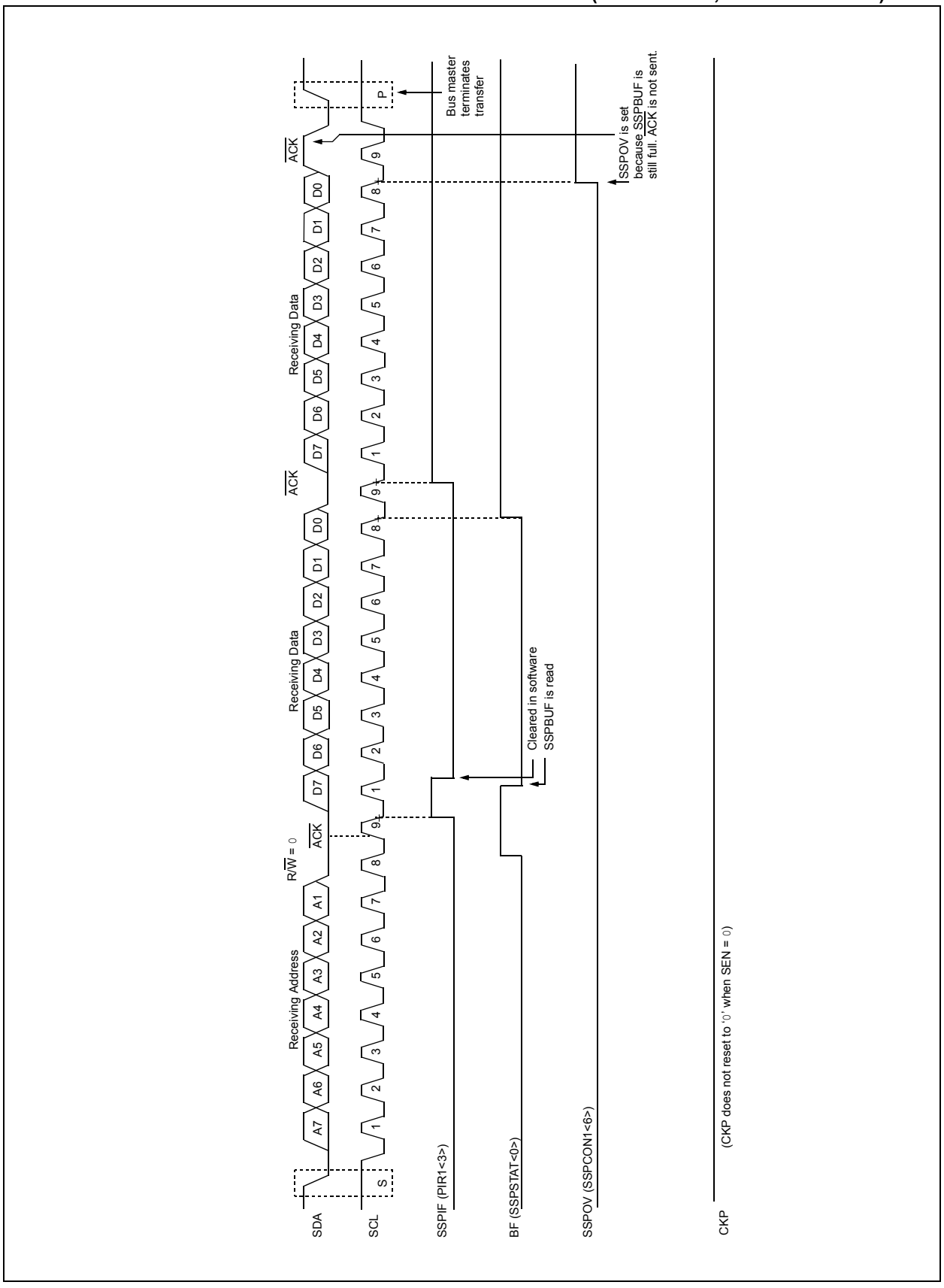

© 2007 Microchip Technology Inc.

FIGURE 17-9: I²C™ SLAVE MODE TIMING (TRANSMISSION, 7-BIT ADDRESS)

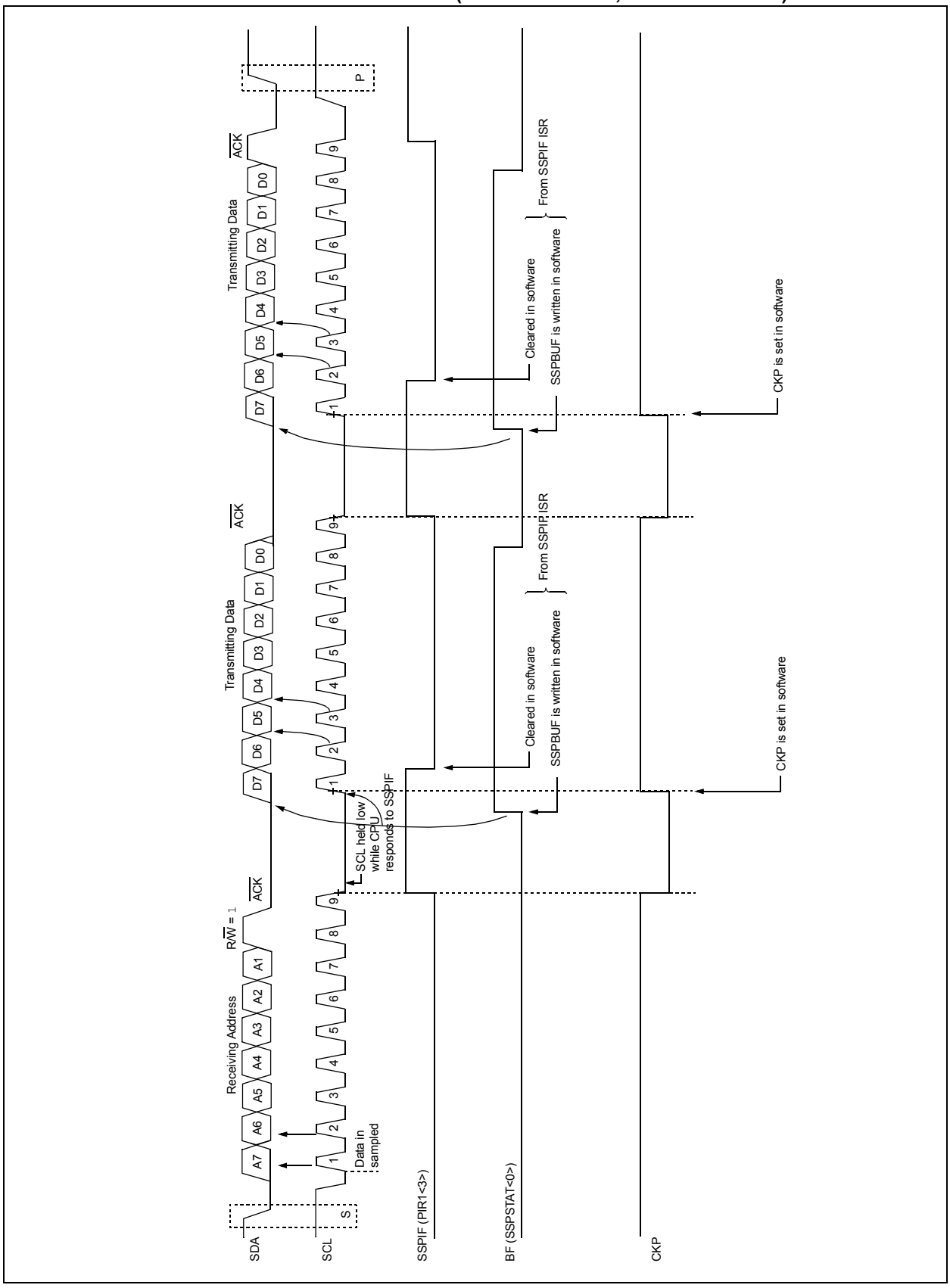

FIGURE 17-10: I²C™ SLAVE MODE TIMING WITH SEN = 0 (RECEPTION, 10-BIT ADDRESS)

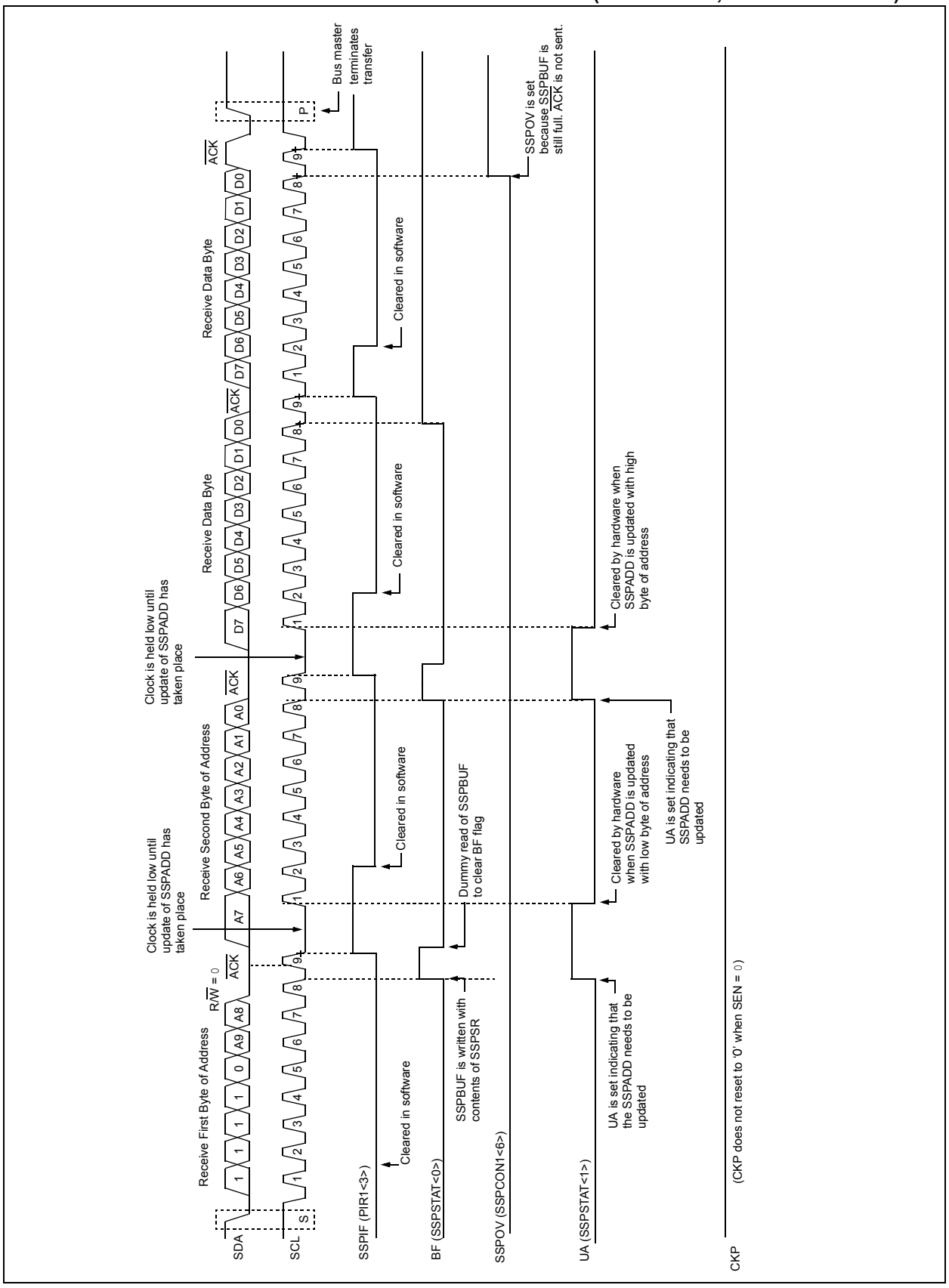

© 2007 Microchip Technology Inc.

FIGURE 17-11: I²C™ SLAVE MODE TIMING (TRANSMISSION, 10-BIT ADDRESS)

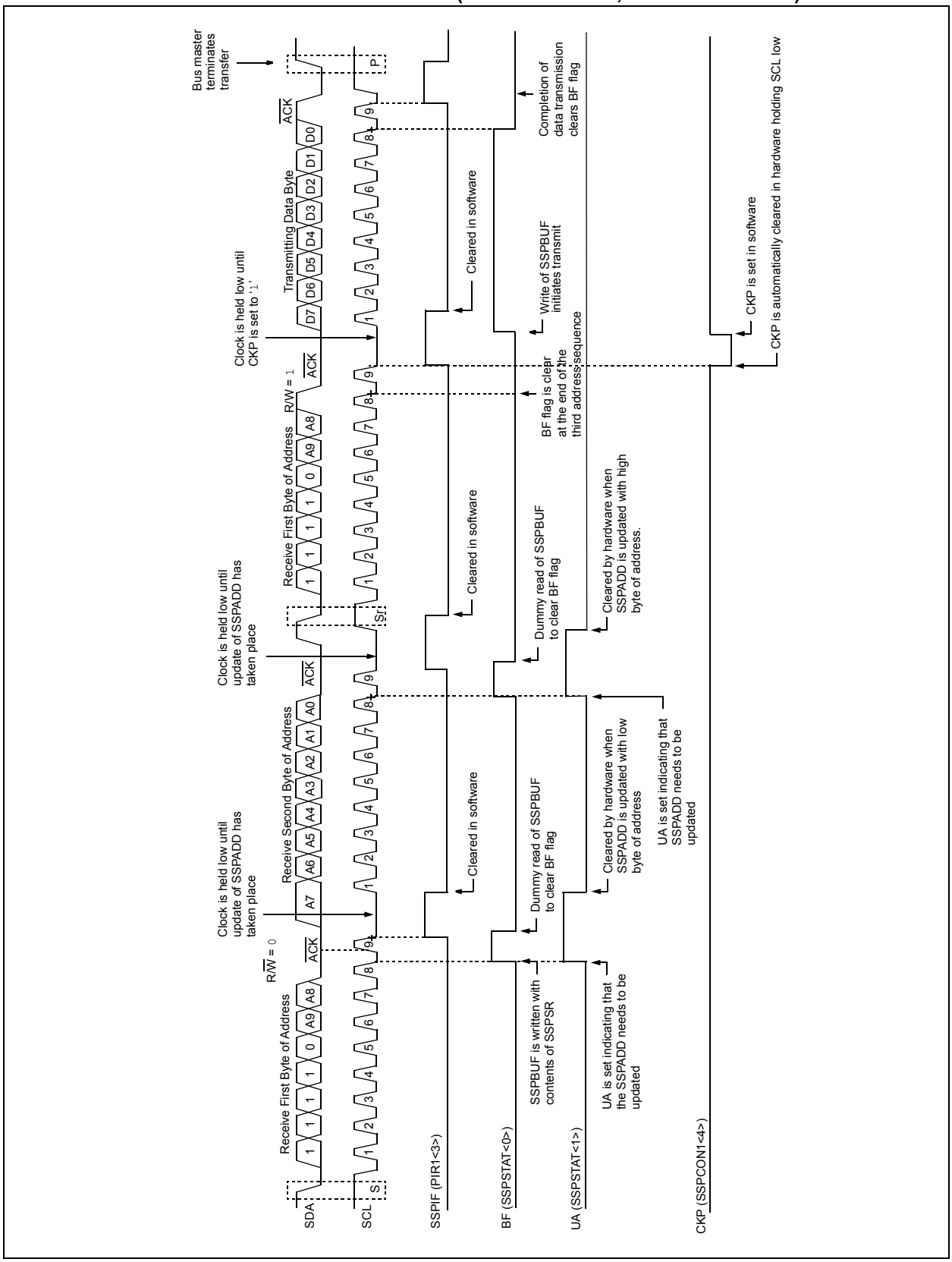

17.4.4 CLOCK STRETCHING

Both 7 and 10-bit Slave modes implement automatic clock stretching during a transmit sequence.

The SEN bit (SSPCON2<0>) allows clock stretching to be enabled during receives. Setting SEN will cause the SCL pin to be held low at the end of each data receive sequence.

17.4.4.1 Clock Stretching for 7-Bit Slave Receive Mode (SEN = 1)

In 7-Bit Slave Receive mode, on the falling edge of the ninth clock at the end of the ACK sequence if the BF bit is set, the CKP bit in the SSPCON1 register is automatically cleared, forcing the SCL output to be held low. The CKP being cleared to '0' will assert the SCL line low. The CKP bit must be set in the user's ISR before reception is allowed to continue. By holding the SCL line low, the user has time to service the ISR and read the contents of the SSPBUF before the master device can initiate another receive sequence. This will prevent buffer overruns from occurring (see Figure 17-13).

Note 1: If the user reads the contents of the SSPBUF before the falling edge of the ninth clock, thus clearing the BF bit, the CKP bit will not be cleared and clock stretching will not occur.

2: The CKP bit can be set in software regardless of the state of the BF bit. The user should be careful to clear the BF bit in the ISR before the next receive sequence in order to prevent an overflow condition.

17.4.4.2 Clock Stretching for 10-Bit Slave Receive Mode (SEN = 1)

In 10-Bit Slave Receive mode, during the address sequence, clock stretching automatically takes place but the CKP bit is not cleared. During this time, if the UA bit is set after the ninth clock, clock stretching is initiated. The UA bit is set after receiving the upper byte of the 10-bit address and following the receive of the second byte of the 10-bit address with the R/$\overline{W}$ bit cleared to '0'. The release of the clock line occurs upon updating SSPADD. Clock stretching will occur on each data receive sequence as described in 7-bit mode.

Note: If the user polls the UA bit and clears it by updating the SSPADD register before the falling edge of the ninth clock occurs and if the user hasn't cleared the BF bit by reading the SSPBUF register before that time, then the CKP bit will still NOT be asserted low. Clock stretching on the basis of the state of the BF bit only occurs during a data sequence, not an address sequence.

17.4.4.3 Clock Stretching for 7-Bit Slave Transmit Mode

7-Bit Slave Transmit mode implements clock stretching by clearing the CKP bit after the falling edge of the ninth clock if the BF bit is clear. This occurs regardless of the state of the SEN bit.

The user's ISR must set the CKP bit before transmission is allowed to continue. By holding the SCL line low, the user has time to service the ISR and load the contents of the SSPBUF before the master device can initiate another transmit sequence (see Figure 17-9).

Note 1: If the user loads the contents of SSPBUF, setting the BF bit before the falling edge of the ninth clock, the CKP bit will not be cleared and clock stretching will not occur.

2: The CKP bit can be set in software regardless of the state of the BF bit.

17.4.4.4 Clock Stretching for 10-Bit Slave Transmit Mode

In 10-Bit Slave Transmit mode, clock stretching is controlled during the first two address sequences by the state of the UA bit, just as it is in 10-Bit Slave Receive mode. The first two addresses are followed by a third address sequence which contains the high-order bits of the 10-bit address and the R/$\overline{W}$ bit set to '1'. After the third address sequence is performed, the UA bit is not set, the module is now configured in Transmit mode and clock stretching is controlled by the BF flag as in 7-Bit Slave Transmit mode (see Figure 17-11).

© 2007 Microchip Technology Inc.

17.4.4.5 Clock Synchronization and the CKP bit (SEN = 1)

The SEN bit is also used to synchronize writes to the CKP bit. If a user clears the CKP bit, the SCL output is forced to '0'. When the SEN bit is set to '1', setting the CKP bit will not assert the SCL output low until the SCL output is already sampled low. If the user attempts to drive SCL low, the CKP bit will not assert the SCL line until an external I^2C master device has already asserted the SCL line. The SCL output will remain low until the CKP bit is set and all other devices on the I^2C bus have deasserted SCL. This ensures that a write to the CKP bit will not violate the minimum high time requirement for SCL (see Figure 17-12).

Note:	If the SEN bit is '0', clearing the CKP bit will result in immediately driving the SCL output to '0' regardless of the current state.

FIGURE 17-12: CLOCK SYNCHRONIZATION TIMING

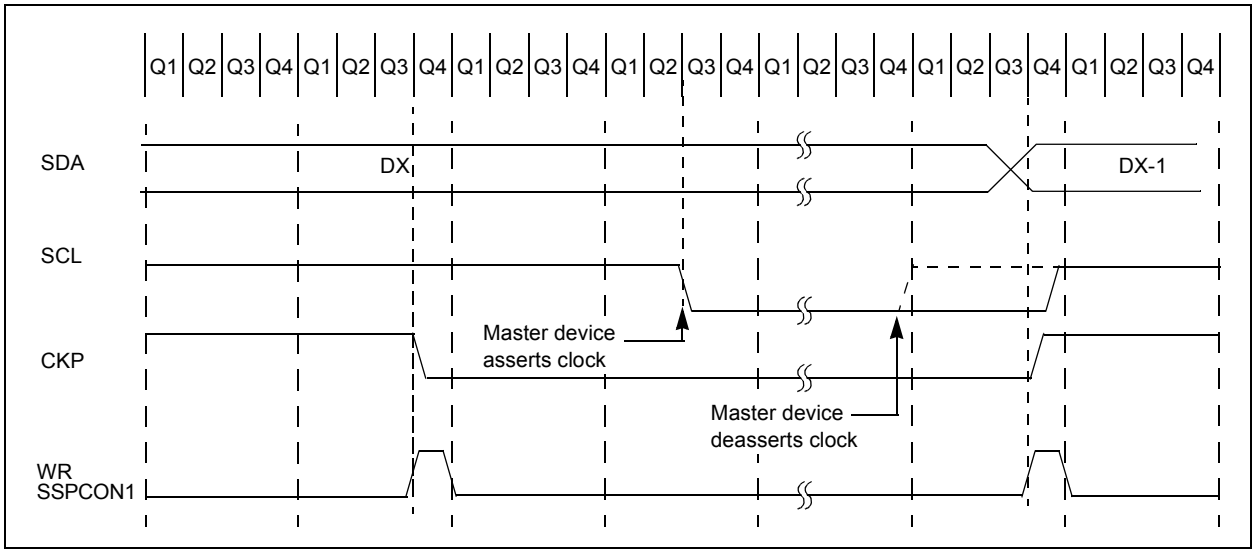

FIGURE 17-13: I^2C™ SLAVE MODE TIMING WITH SEN = 1 (RECEPTION, 7-BIT ADDRESS)

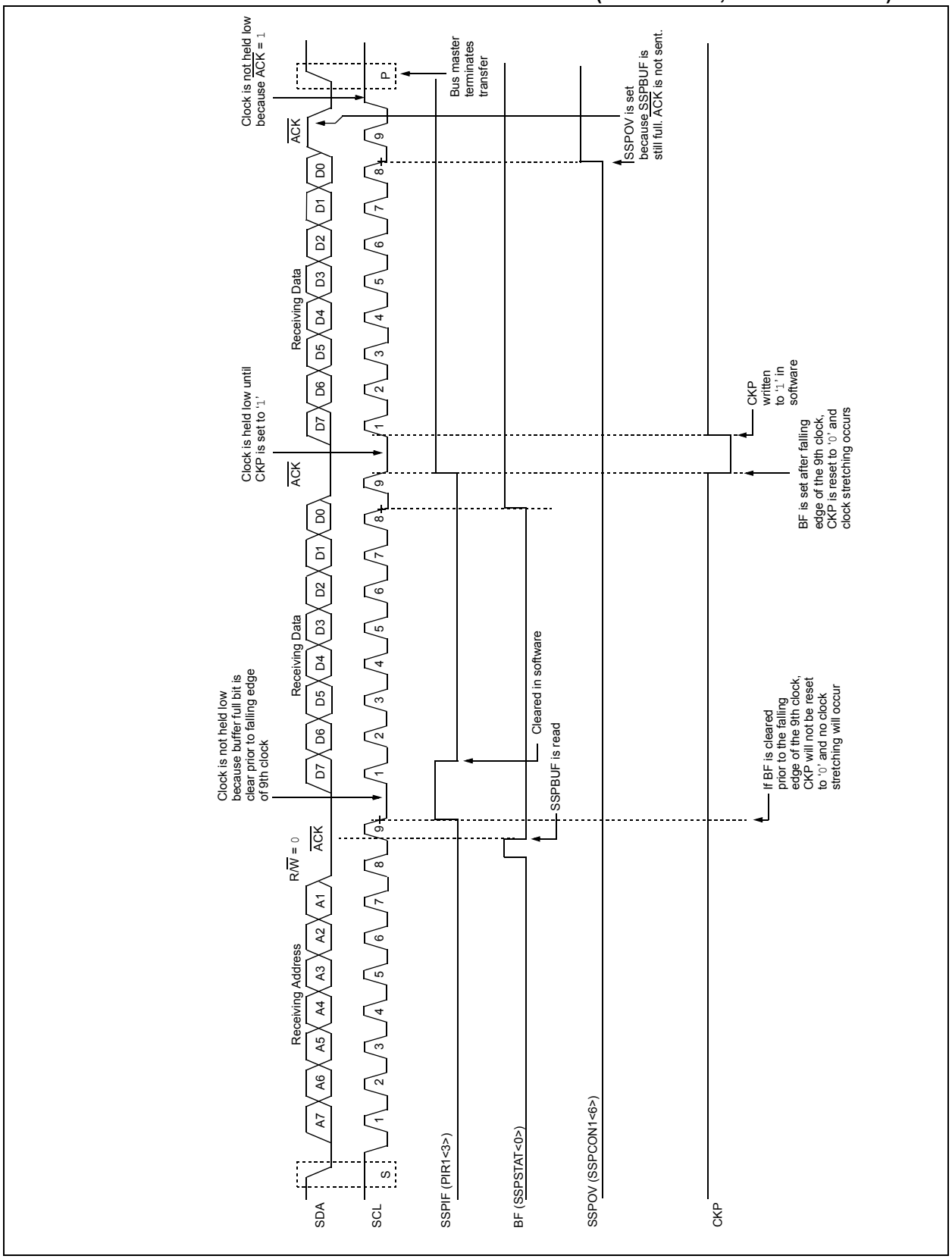

© 2007 Microchip Technology Inc.

FIGURE 17-14: I²C™ SLAVE MODE TIMING WITH SEN = 1 (RECEPTION, 10-BIT ADDRESS)

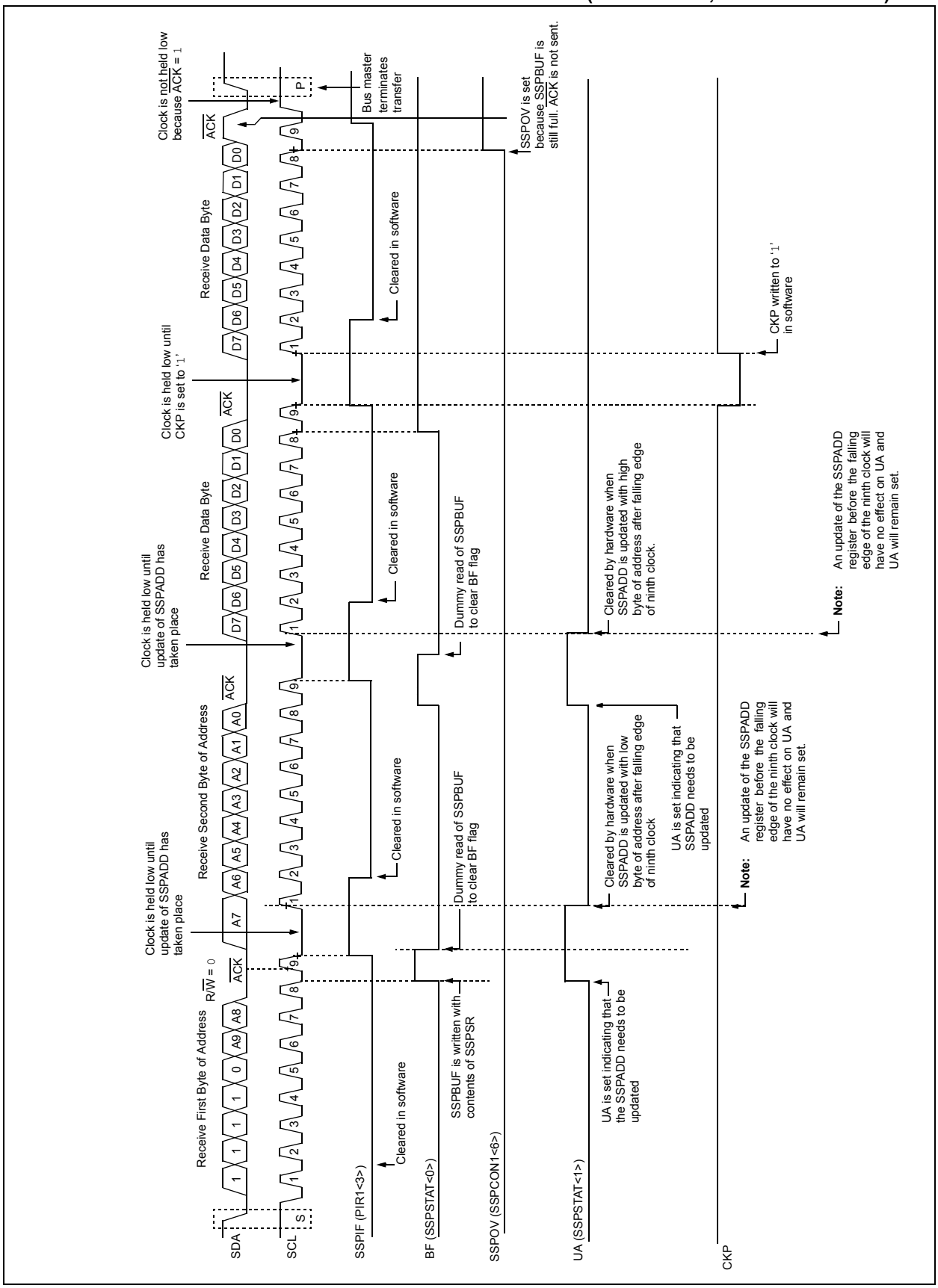

17.4.5 GENERAL CALL ADDRESS SUPPORT

The addressing procedure for the I^2C bus is such that the first byte after the Start condition usually determines which device will be the slave addressed by the master. The exception is the general call address, which can address all devices. When this address is used, all devices should, in theory, respond with an Acknowledge.

The general call address is one of eight addresses reserved for specific purposes by the I^2C protocol. It consists of all '0's with R/$\overline{W}$ = 0.

The general call address is recognized when the General Call Enable bit (GCEN) is enabled (SSPCON2<7> set). Following a Start bit detect, 8 bits are shifted into the SSPSR and the address is compared against the SSPADD. It is also compared to the general call address and fixed in hardware.

If the general call address matches, the SSPSR is transferred to the SSPBUF, the BF flag bit is set (eighth bit) and on the falling edge of the ninth bit ($\overline{ACK}$ bit), the SSPIF interrupt flag bit is set.

When the interrupt is serviced, the source for the interrupt can be checked by reading the contents of the SSPBUF. The value can be used to determine if the address was device specific or a general call address.

In 10-bit mode, the SSPADD is required to be updated for the second half of the address to match and the UA bit is set (SSPSTAT<1>). If the general call address is sampled when the GCEN bit is set while the slave is configured in 10-Bit Addressing mode, then the second half of the address is not necessary, the UA bit will not be set and the slave will begin receiving data after the Acknowledge (Figure 17-15).

FIGURE 17-15: SLAVE MODE GENERAL CALL ADDRESS SEQUENCE (7 OR 10-BIT ADDRESSING MODE)

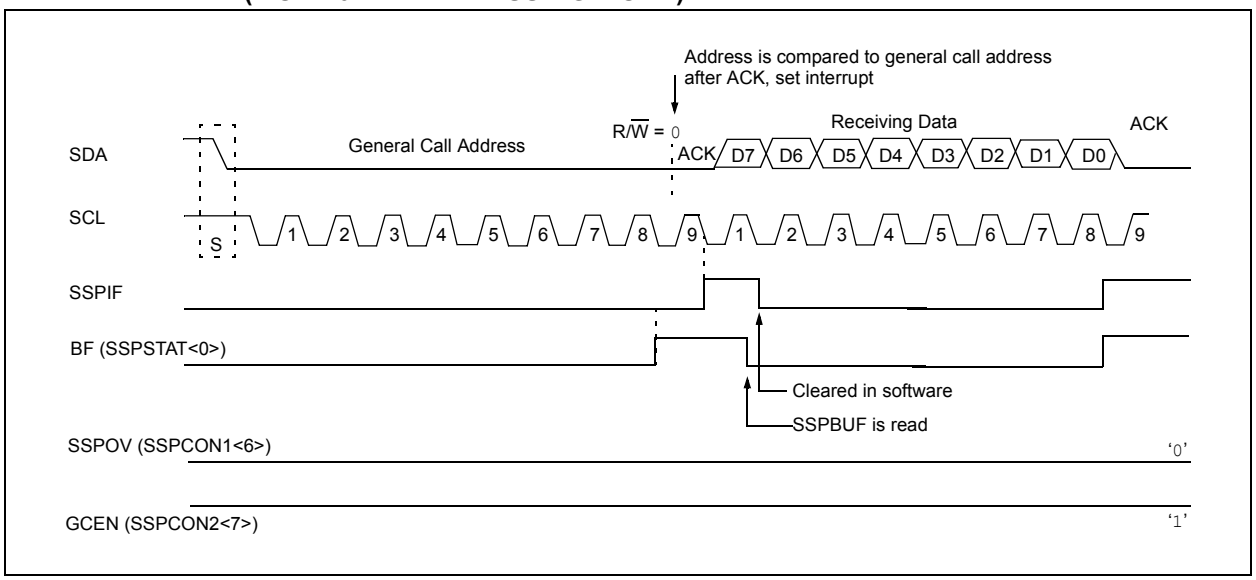

© 2007 Microchip Technology Inc.

17.4.6 MASTER MODE

Master mode is enabled by setting and clearing the appropriate SSPM bits in SSPCON1 and by setting the SSPEN bit. In Master mode, the SCL and SDA lines are manipulated by the MSSP hardware.

Master mode of operation is supported by interrupt generation on the detection of the Start and Stop conditions. The Stop (P) and Start (S) bits are cleared from a Reset or when the MSSP module is disabled. Control of the I^2C bus may be taken when the P bit is set or the bus is Idle, with both the S and P bits clear.

In Firmware Controlled Master mode, user code conducts all I^2C bus operations based on Start and Stop bit conditions.

Once Master mode is enabled, the user has six options.

1. Assert a Start condition on SDA and SCL.
2. Assert a Repeated Start condition on SDA and SCL.
3. Write to the SSPBUF register initiating transmission of data/address.
4. Configure the I^2C port to receive data.
5. Generate an Acknowledge condition at the end of a received byte of data.
6. Generate a Stop condition on SDA and SCL.

Note: The MSSP module, when configured in I^2C Master mode, does not allow queueing of events. For instance, the user is not allowed to initiate a Start condition and immediately write the SSPBUF register to initiate transmission before the Start condition is complete. In this case, the SSPBUF will not be written to and the WCOL bit will be set, indicating that a write to the SSPBUF did not occur.

The following events will cause MSSP Interrupt Flag bit, SSPIF, to be set (MSSP interrupt if enabled):

- Start Condition
- Stop Condition
- Data Transfer Byte Transmitted/Received
- Acknowledge Transmit
- Repeated Start

FIGURE 17-16: MSSP BLOCK DIAGRAM (I^2C MASTER MODE)

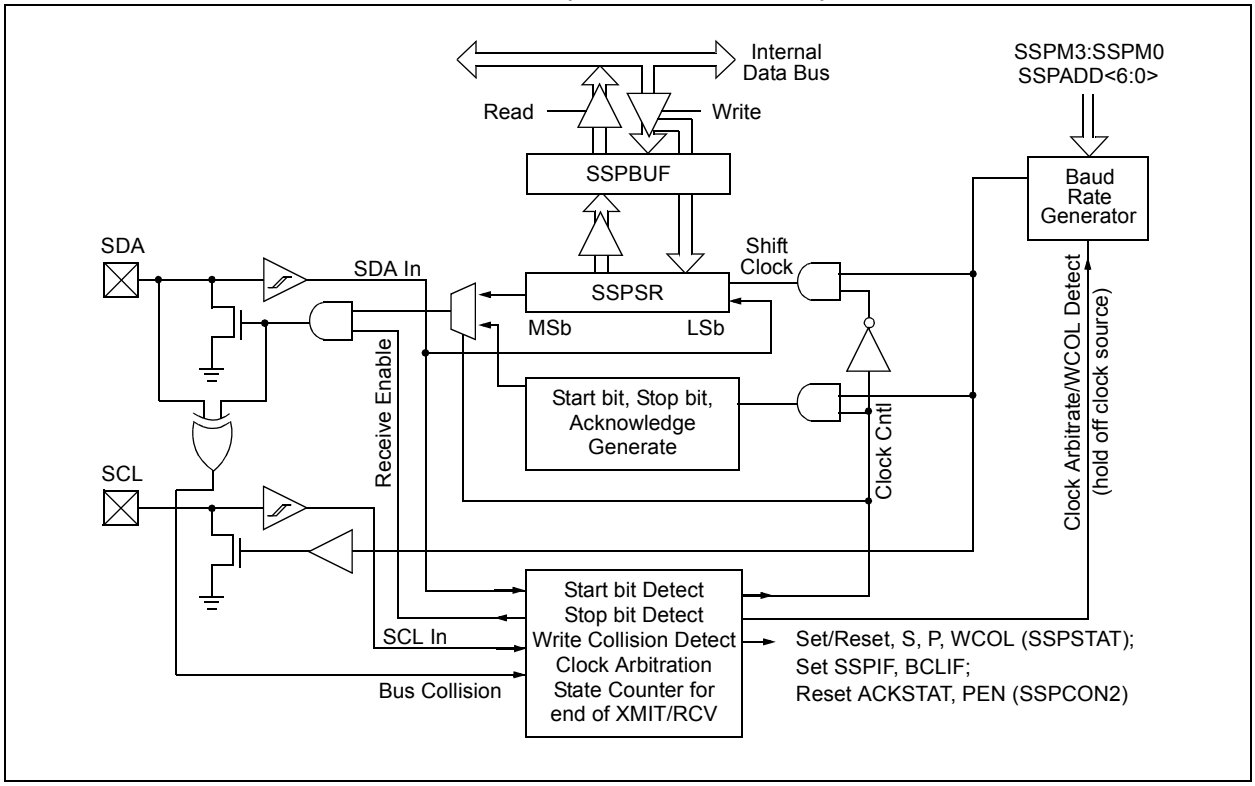

17.4.6.1 I²C Master Mode Operation

The master device generates all of the serial clock pulses and the Start and Stop conditions. A transfer is ended with a Stop condition or with a Repeated Start condition. Since the Repeated Start condition is also the beginning of the next serial transfer, the I²C bus will not be released.

In Master Transmitter mode, serial data is output through SDA, while SCL outputs the serial clock. The first byte transmitted contains the slave address of the receiving device (7 bits) and the Read/Write (R/$\overline{W}$) bit. In this case, the R/$\overline{W}$ bit will be logic '0'. Serial data is transmitted 8 bits at a time. After each byte is transmitted, an Acknowledge bit is received. Start and Stop conditions are output to indicate the beginning and the end of a serial transfer.

In Master Receive mode, the first byte transmitted contains the slave address of the transmitting device (7 bits) and the R/$\overline{W}$ bit. In this case, the R/$\overline{W}$ bit will be logic '1'. Thus, the first byte transmitted is a 7-bit slave address followed by a '1' to indicate the receive bit. Serial data is received via SDA, while SCL outputs the serial clock. Serial data is received 8 bits at a time. After each byte is received, an Acknowledge bit is transmitted. Start and Stop conditions indicate the beginning and end of transmission.

The Baud Rate Generator used for the SPI mode operation is used to set the SCL clock frequency for either 100 kHz, 400 kHz or 1 MHz I²C operation. See **Section 17.4.7 "Baud Rate"** for more detail.

A typical transmit sequence would go as follows:

1. The user generates a Start condition by setting the Start enable bit, SEN (SSPCON2<0>).
2. SSPIF is set. The MSSP module will wait the required start time before any other operation takes place.
3. The user loads the SSPBUF with the slave address to transmit.
4. Address is shifted out the SDA pin until all 8 bits are transmitted.
5. The MSSP module shifts in the ACK bit from the slave device and writes its value into the SSPCON2 register (SSPCON2<6>).
6. The MSSP module generates an interrupt at the end of the ninth clock cycle by setting the SSPIF bit.
7. The user loads the SSPBUF with eight bits of data.
8. Data is shifted out the SDA pin until all 8 bits are transmitted.
9. The MSSP module shifts in the ACK bit from the slave device and writes its value into the SSPCON2 register (SSPCON2<6>).
10. The MSSP module generates an interrupt at the end of the ninth clock cycle by setting the SSPIF bit.
11. The user generates a Stop condition by setting the Stop Enable bit, PEN (SSPCON2<2>).
12. Interrupt is generated once the Stop condition is complete.

© 2007 Microchip Technology Inc.

17.4.7 BAUD RATE

In I^2C Master mode, the Baud Rate Generator (BRG) reload value is placed in the lower 7 bits of the SSPADD register (Register 17-17). When a write occurs to SSPBUF, the Baud Rate Generator will automatically begin counting. The BRG counts down to '0' and stops until another reload has taken place. The BRG count is decremented twice per instruction cycle (T_{CY}) on the Q2 and Q4 clocks. In I^2C Master mode, the BRG is reloaded automatically.

Once the given operation is complete (i.e., transmission of the last data bit is followed by $\overline{ACK}$), the internal clock will automatically stop counting and the SCL pin will remain in its last state.

Table 17-3 demonstrates clock rates based on instruction cycles and the BRG value loaded into SSPADD.

17.4.7.1 Baud Rate Generation in Power-Managed Modes

When the device is operating in a power-managed mode, the clock source to the Baud Rate Generator may change frequency or stop, depending on the power-managed mode and clock source selected.

In most power modes, the Baud Rate Generator continues to be clocked but may be clocked from the primary clock (selected in a Configuration Word), the secondary clock (Timer1 oscillator at 32.768 kHz) or the internal oscillator block (one of eight frequencies between 31 kHz and 8 MHz). If the Sleep mode is selected, all clocks are stopped and the Baud Rate Generator will not be clocked.

FIGURE 17-17: BAUD RATE GENERATOR BLOCK DIAGRAM

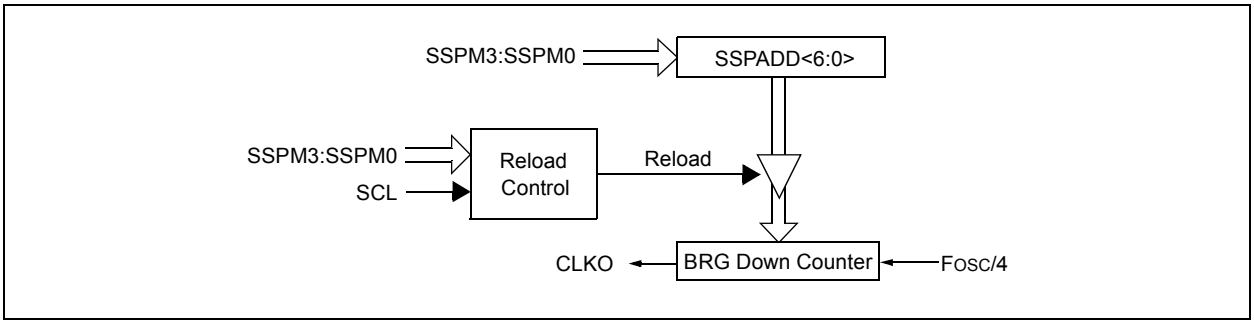

TABLE 17-3: I^2C CLOCK RATE W/BRG

FOSC	FCY	FCY * 2	SSPADD VALUE (See Register 17-4, Mode 1000)	FSCL(2) (2 Rollovers of BRG)
40 MHz	10 MHz	20 MHz	18h	400 kHz(1)
40 MHz	10 MHz	20 MHz	1Fh	312.5 kHz
40 MHz	10 MHz	20 MHz	63h	100 kHz
16 MHz	4 MHz	8 MHz	09h	400 kHz(1)
16 MHz	4 MHz	8 MHz	0Bh	308 kHz
16 MHz	4 MHz	8 MHz	27h	100 kHz
4 MHz	1 MHz	2 MHz	02h	333 kHz(1)
4 MHz	1 MHz	2 MHz	09h	100kHz
4 MHz	1 MHz	2 MHz	00h	1 MHz(1)

Note 1: The I^2C interface does not conform to the 400 kHz I^2C specification (which applies to rates greater than 100 kHz) in all details, but may be used with care where higher rates are required by the application.

2: Actual clock rate will depend on bus conditions. Bus capacitance can increase rise time and extend the low time of the clock period, reducing the effective clock frequency (see **Section 17.4.7.2 "Clock Arbitration"**).

17.4.7.2 Clock Arbitration

Clock arbitration occurs when the master, during any receive, transmit or Repeated Start/Stop condition, deasserts the SCL pin (SCL allowed to float high). When the SCL pin is allowed to float high, the Baud Rate Generator (BRG) is suspended from counting until the SCL pin is actually sampled high. When the SCL pin is sampled high, the Baud Rate Generator is reloaded with the contents of SSPADD<6:0> and begins counting. This ensures that the SCL high time will always be at least one BRG rollover count in the event that the clock is held low by an external device (Figure 17-18).

FIGURE 17-18: BAUD RATE GENERATOR TIMING WITH CLOCK ARBITRATION

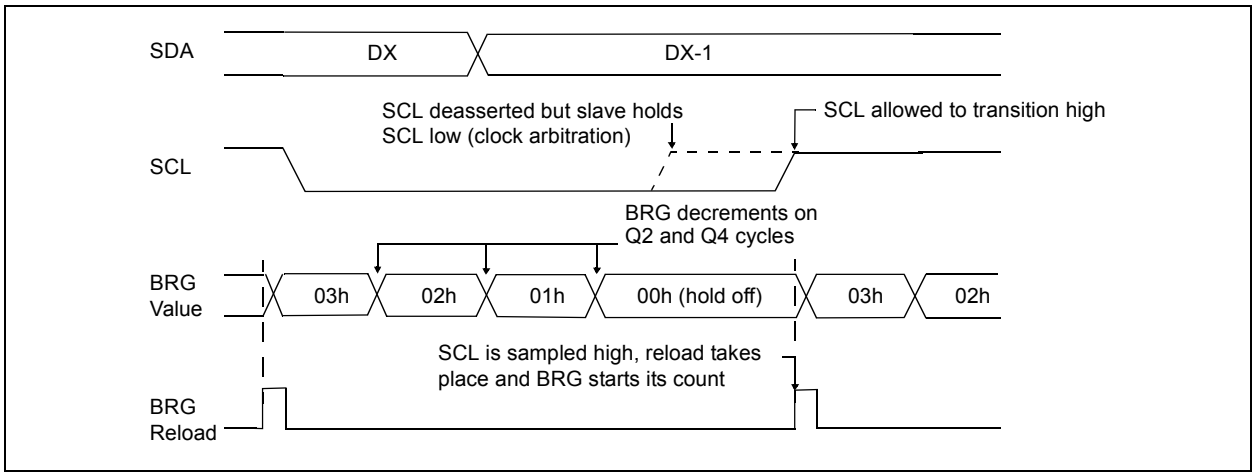

© 2007 Microchip Technology Inc.

17.4.8 I²C MASTER MODE START CONDITION TIMING

To initiate a Start condition, the user sets the Start Condition Enable bit, SEN (SSPCON2<0>). If the SDA and SCL pins are sampled high, the Baud Rate Generator is reloaded with the contents of SSPADD<6:0> and starts its count. If SCL and SDA are both sampled high when the Baud Rate Generator times out (TBRG), the SDA pin is driven low. The action of the SDA being driven low while SCL is high is the Start condition and causes the S bit (SSPSTAT<3>) to be set. Following this, the Baud Rate Generator is reloaded with the contents of SSPADD<6:0> and resumes its count. When the Baud Rate Generator times out (TBRG), the SEN bit (SSPCON2<0>) will be automatically cleared by hardware, the Baud Rate Generator is suspended, leaving the SDA line held low and the Start condition is complete.

Note:	If, at the beginning of the Start condition, the SDA and SCL pins are already sampled low or if during the Start condition, the SCL line is sampled low before the SDA line is driven low, a bus collision occurs, the Bus Collision Interrupt Flag, BCLIF, is set, the Start condition is aborted and the I²C module is reset into its Idle state.

17.4.8.1 WCOL Status Flag

If the user writes the SSPBUF when a Start sequence is in progress, the WCOL is set and the contents of the buffer are unchanged (the write doesn't occur).

Note:	Because queueing of events is not allowed, writing to the lower 5 bits of SSPCON2 is disabled until the Start condition is complete.

FIGURE 17-19: FIRST START BIT TIMING

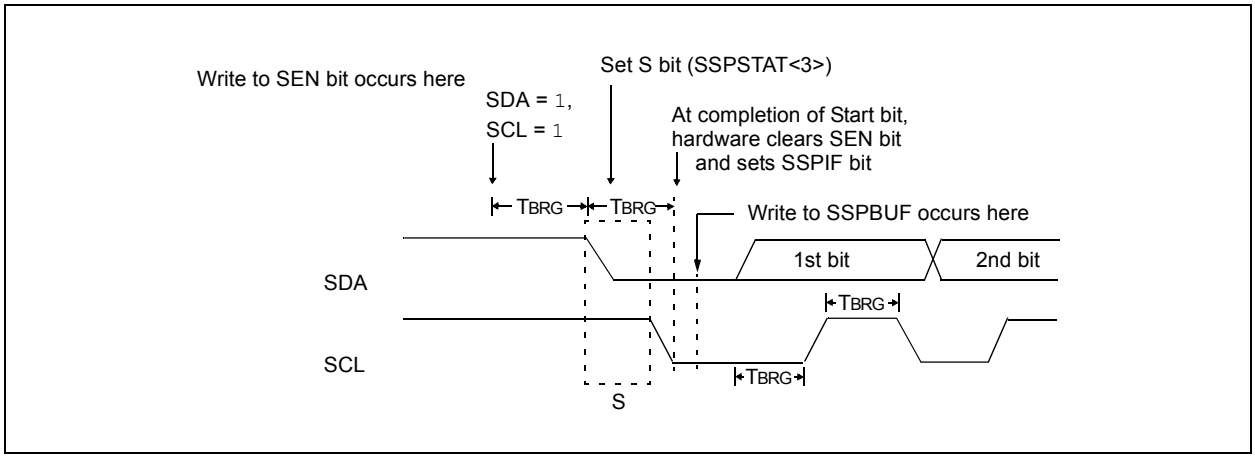

17.4.9 I²C MASTER MODE REPEATED START CONDITION TIMING

A Repeated Start condition occurs when the RSEN bit (SSPCON2<1>) is programmed high and the I²C logic module is in the Idle state. When the RSEN bit is set, the SCL pin is asserted low. When the SCL pin is sampled low, the Baud Rate Generator is loaded with the contents of SSPADD<5:0> and begins counting. The SDA pin is released (brought high) for one Baud Rate Generator count (TBRG). When the Baud Rate Generator times out, if SDA is sampled high, the SCL pin will be deasserted (brought high). When SCL is sampled high, the Baud Rate Generator is reloaded with the contents of SSPADD<6:0> and begins counting. SDA and SCL must be sampled high for one TBRG. This action is then followed by assertion of the SDA pin (SDA = 0) for one TBRG while SCL is high. Following this, the RSEN bit (SSPCON2<1>) will be automatically cleared and the Baud Rate Generator will not be reloaded, leaving the SDA pin held low. As soon as a Start condition is detected on the SDA and SCL pins, the S bit (SSPSTAT<3>) will be set. The SSPIF bit will not be set until the Baud Rate Generator has timed out.

Note 1: If RSEN is programmed while any other event is in progress, it will not take effect.

2: A bus collision during the Repeated Start condition occurs if:

- SDA is sampled low when SCL goes from low-to-high.
- SCL goes low before SDA is asserted low. This may indicate that another master is attempting to transmit a data '1'.

Immediately following the SSPIF bit getting set, the user may write the SSPBUF with the 7-bit address in 7-bit mode, or the default first address in 10-bit mode. After the first eight bits are transmitted and an ACK is received, the user may then transmit an additional eight bits of address (10-bit mode) or eight bits of data (7-bit mode).

17.4.9.1 WCOL Status Flag

If the user writes the SSPBUF when a Repeated Start sequence is in progress, the WCOL is set and the contents of the buffer are unchanged (the write doesn't occur).

Note: Because queueing of events is not allowed, writing of the lower 5 bits of SSPCON2 is disabled until the Repeated Start condition is complete.

FIGURE 17-20: REPEAT START CONDITION WAVEFORM

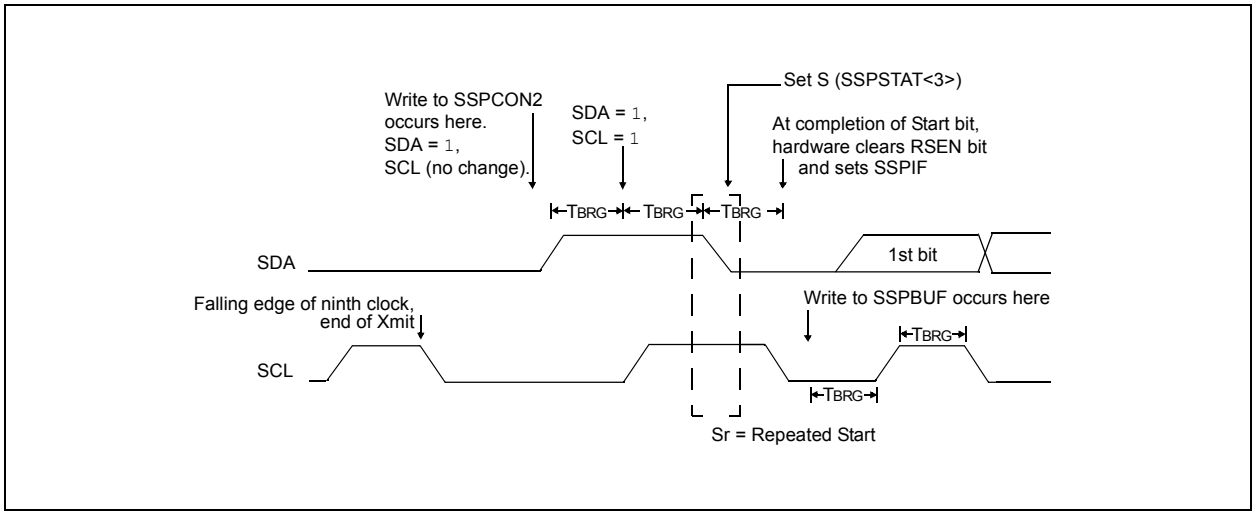

© 2007 Microchip Technology Inc.

17.4.10 I²C MASTER MODE TRANSMISSION

Transmission of a data byte, a 7-bit address or the other half of a 10-bit address is accomplished by simply writing a value to the SSPBUF register. This action will set the Buffer Full Flag bit, BF, and allow the Baud Rate Generator to begin counting and start the next transmission. Each bit of address/data will be shifted out onto the SDA pin after the falling edge of SCL is asserted (see data hold time specification parameter #106). SCL is held low for one Baud Rate Generator rollover count (TBRG). Data should be valid before SCL is released high (see data setup time specification parameter #107). When the SCL pin is released high, it is held that way for TBRG. The data on the SDA pin must remain stable for that duration and some hold time after the next falling edge of SCL. After the eighth bit is shifted out (the falling edge of the eighth clock), the BF flag is cleared and the master releases SDA. This allows the slave device being addressed to respond with an $\overline{\text{ACK}}$ bit, during the ninth bit time, if an address match occurred or if data was received properly. The status of $\overline{\text{ACK}}$ is written into the ACKDT bit on the falling edge of the ninth clock. If the master receives an Acknowledge, the Acknowledge Status bit, ACKSTAT, is cleared; if not, the bit is set. After the ninth clock, the SSPIF bit is set and the master clock (Baud Rate Generator) is suspended until the next data byte is loaded into the SSPBUF, leaving SCL low and SDA unchanged (Figure 17-21).

After the write to the SSPBUF, each bit of address will be shifted out on the falling edge of SCL until all seven address bits and the R/$\overline{\text{W}}$ bit are completed. On the falling edge of the eighth clock, the master will deassert the SDA pin, allowing the slave to respond with an Acknowledge. On the falling edge of the ninth clock, the master will sample the SDA pin to see if the address was recognized by a slave. The status of the ACK bit is loaded into the ACKSTAT status bit (SSPCON2<6>). Following the falling edge of the ninth clock transmission of the address, the SSPIF is set, the BF flag is cleared and the Baud Rate Generator is turned off until another write to the SSPBUF takes place, holding SCL low and allowing SDA to float.

17.4.10.1 BF Status Flag

In Transmit mode, the BF bit (SSPSTAT<0>) is set when the CPU writes to SSPBUF and is cleared when all 8 bits are shifted out.

17.4.10.2 WCOL Status Flag

If the user writes the SSPBUF when a transmit is already in progress (i.e., SSPSR is still shifting out a data byte), the WCOL is set and the contents of the buffer are unchanged (the write doesn't occur).

WCOL must be cleared in software.

17.4.10.3 ACKSTAT Status Flag

In Transmit mode, the ACKSTAT bit (SSPCON2<6>) is cleared when the slave has sent an Acknowledge ($\overline{\text{ACK}}$ = 0) and is set when the slave does not Acknowledge ($\overline{\text{ACK}}$ = 1). A slave sends an Acknowledge when it has recognized its address (including a general call) or when the slave has properly received its data.

17.4.11 I²C MASTER MODE RECEPTION

Master mode reception is enabled by programming the Receive Enable bit, RCEN (SSPCON2<3>).

Note:	The MSSP module must be in an Idle state before the RCEN bit is set or the RCEN bit will be disregarded.

The Baud Rate Generator begins counting and on each rollover, the state of the SCL pin changes (high-to-low/low-to-high) and data is shifted into the SSPSR. After the falling edge of the eighth clock, the receive enable flag is automatically cleared, the contents of the SSPSR are loaded into the SSPBUF, the BF flag bit is set, the SSPIF flag bit is set and the Baud Rate Generator is suspended from counting, holding SCL low. The MSSP is now in Idle state, awaiting the next command. When the buffer is read by the CPU, the BF flag bit is automatically cleared. The user can then send an Acknowledge bit at the end of reception by setting the Acknowledge Sequence Enable bit, ACKEN (SSPCON2<4>).

17.4.11.1 BF Status Flag

In receive operation, the BF bit is set when an address or data byte is loaded into SSPBUF from SSPSR. It is cleared when the SSPBUF register is read.

17.4.11.2 SSPOV Status Flag

In receive operation, the SSPOV bit is set when 8 bits are received into the SSPSR and the BF flag bit is already set from a previous reception.

17.4.11.3 WCOL Status Flag

If the user writes the SSPBUF when a receive is already in progress (i.e., SSPSR is still shifting in a data byte), the WCOL bit is set and the contents of the buffer are unchanged (the write doesn't occur).

FIGURE 17-21: I²C™ MASTER MODE WAVEFORM (TRANSMISSION, 7 OR 10-BIT ADDRESS)

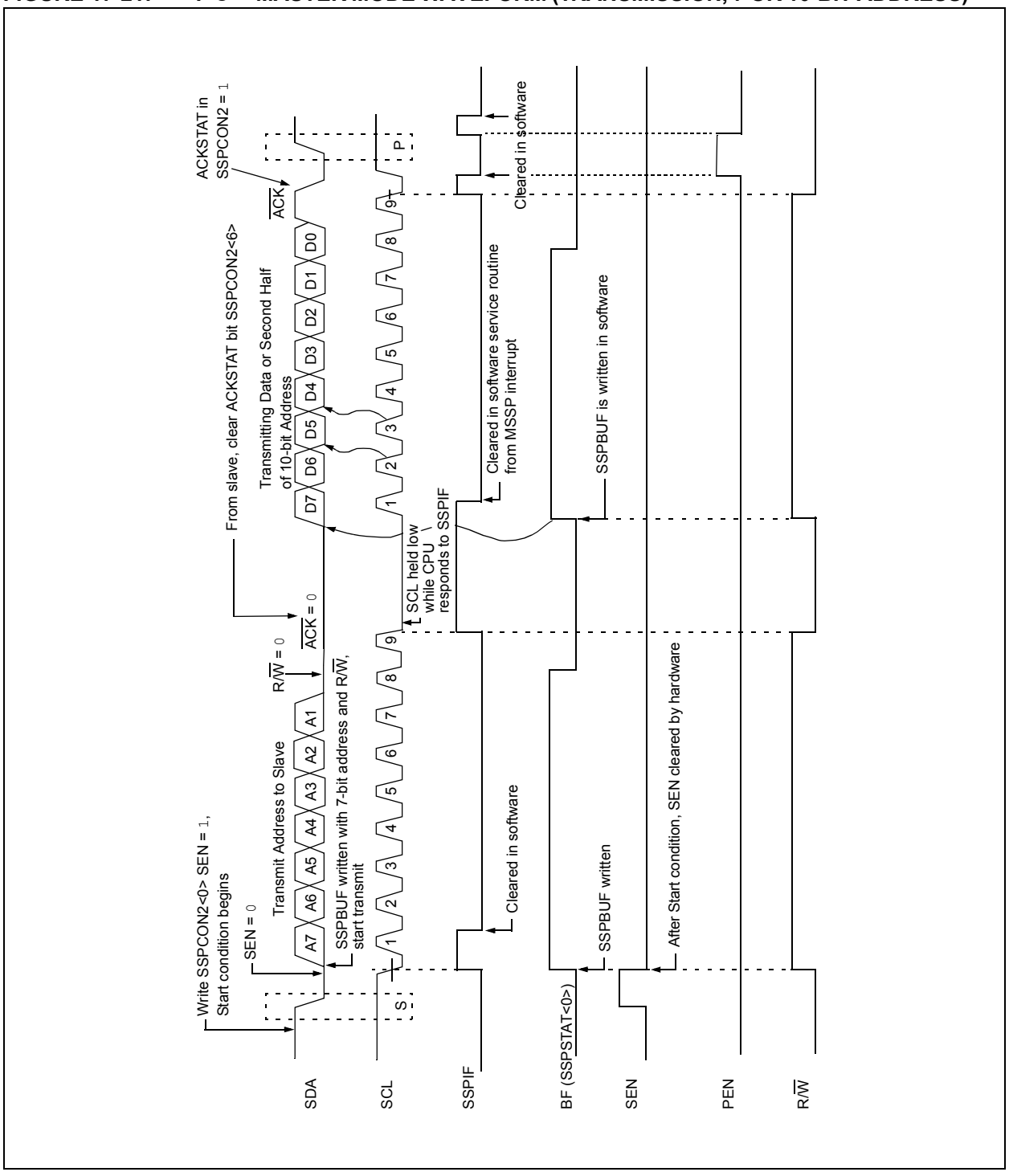

© 2007 Microchip Technology Inc.

FIGURE 17-22: I²C™ MASTER MODE WAVEFORM (RECEPTION, 7-BIT ADDRESS)

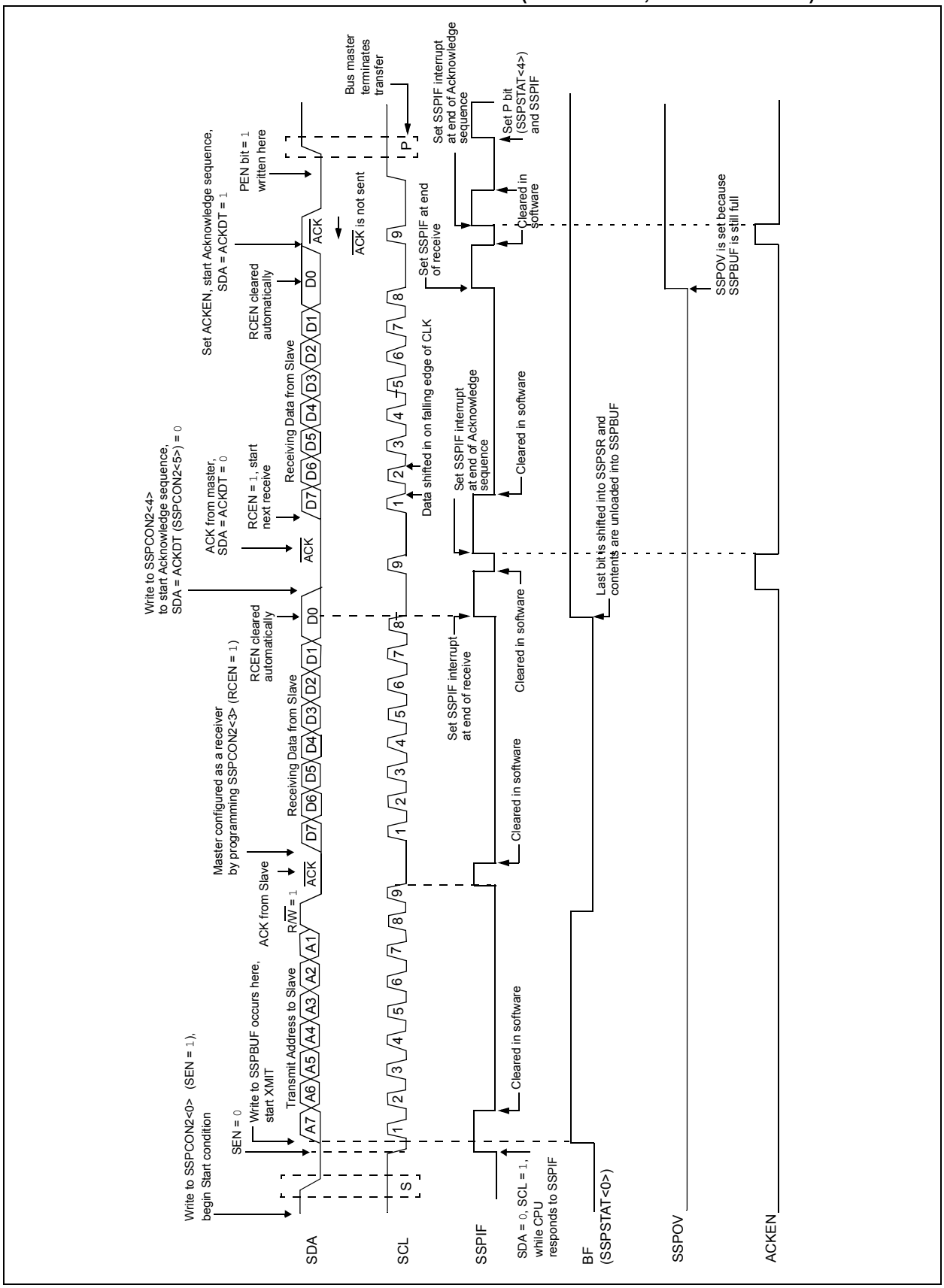

17.4.12 ACKNOWLEDGE SEQUENCE TIMING

An Acknowledge sequence is enabled by setting the Acknowledge Sequence Enable bit, ACKEN (SSPCON2<4>). When this bit is set, the SCL pin is pulled low and the contents of the Acknowledge data bit are presented on the SDA pin. If the user wishes to generate an Acknowledge, then the ACKDT bit should be cleared. If not, the user should set the ACKDT bit before starting an Acknowledge sequence. The Baud Rate Generator then counts for one rollover period (TBRG) and the SCL pin is deasserted (pulled high). When the SCL pin is sampled high (clock arbitration), the Baud Rate Generator counts for TBRG. The SCL pin is then pulled low. Following this, the ACKEN bit is automatically cleared, the Baud Rate Generator is turned off and the MSSP module then goes into Idle mode (Figure 17-23).

17.4.12.1 WCOL Status Flag

If the user writes the SSPBUF when an Acknowledge sequence is in progress, then WCOL is set and the contents of the buffer are unchanged (the write doesn't occur).

17.4.13 STOP CONDITION TIMING

A Stop bit is asserted on the SDA pin at the end of a receive/transmit by setting the Stop Sequence Enable bit, PEN (SSPCON2<2>). At the end of a receive/transmit, the SCL line is held low after the falling edge of the ninth clock. When the PEN bit is set, the master will assert the SDA line low. When the SDA line is sampled low, the Baud Rate Generator is reloaded and counts down to 0. When the Baud Rate Generator times out, the SCL pin will be brought high and one TBRG (Baud Rate Generator rollover count) later, the SDA pin will be deasserted. When the SDA pin is sampled high while SCL is high, the P bit (SSPSTAT<4>) is set. A TBRG later, the PEN bit is cleared and the SSPIF bit is set (Figure 17-24).

17.4.13.1 WCOL Status Flag

If the user writes the SSPBUF when a Stop sequence is in progress, then the WCOL bit is set and the contents of the buffer are unchanged (the write doesn't occur).

FIGURE 17-23: ACKNOWLEDGE SEQUENCE WAVEFORM

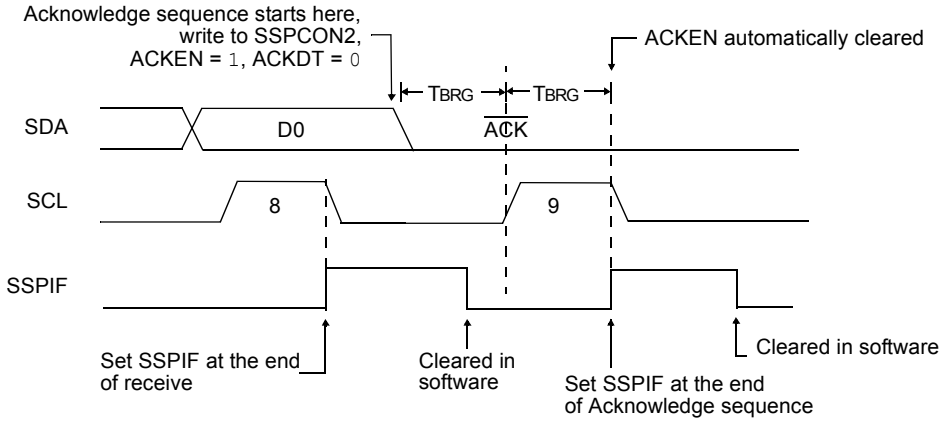

Note: TBRG = one Baud Rate Generator period.

FIGURE 17-24: STOP CONDITION RECEIVE OR TRANSMIT MODE

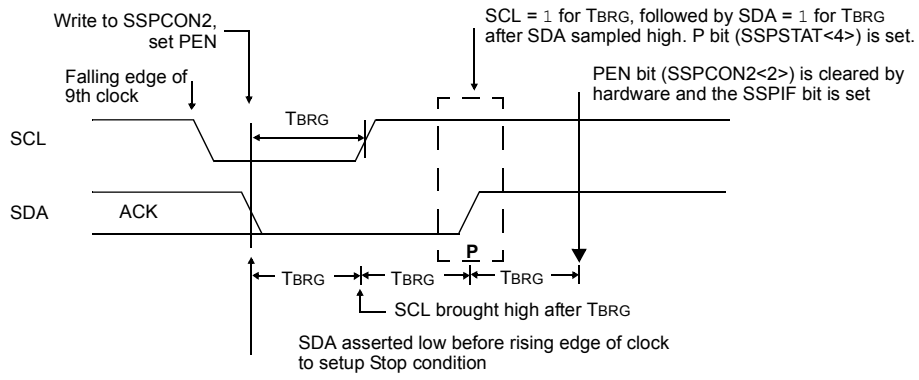

Note: TBRG = one Baud Rate Generator period.

© 2007 Microchip Technology Inc.

17.4.14 POWER-MANAGED MODE OPERATION

While in any power-managed mode, the I²C module can receive addresses or data and when an address match or complete byte transfer occurs, wake the processor from Sleep (if the MSSP interrupt is enabled).

17.4.15 EFFECT OF A RESET

A Reset disables the MSSP module and terminates the current transfer.

17.4.16 MULTI-MASTER MODE

In Multi-Master mode, the interrupt generation on the detection of the Start and Stop conditions allows the determination of when the bus is free. The Stop (P) and Start (S) bits are cleared from a Reset or when the MSSP module is disabled. Control of the I²C bus may be taken when the P bit (SSPSTAT<4>) is set or the bus is idle with both the S and P bits clear. When the bus is busy, enabling the MSSP interrupt will generate the interrupt when the Stop condition occurs.

In multi-master operation, the SDA line must be monitored for arbitration to see if the signal level is the expected output level. This check is performed in hardware with the result placed in the BCLIF bit.

The states where arbitration can be lost are:

- Address Transfer
- Data Transfer
- A Start Condition
- A Repeated Start Condition
- An Acknowledge Condition

17.4.17 MULTI -MASTER COMMUNICATION, BUS COLLISION AND BUS ARBITRATION

Multi-Master mode support is achieved by bus arbitration. When the master outputs address/data bits onto the SDA pin, arbitration takes place when the master outputs a '1' on SDA by letting SDA float high and another master asserts a '0'. When the SCL pin floats high, data should be stable. If the expected data on SDA is a '1' and the data sampled on the SDA pin = 0, then a bus collision has taken place. The master will set the Bus Collision Interrupt Flag, BCLIF, and reset the I²C port to its Idle state (Figure 17-25).

If a transmit was in progress when the bus collision occurred, the transmission is halted, the BF flag is cleared, the SDA and SCL lines are deasserted and the SSPBUF can be written to. When the user services the bus collision Interrupt Service Routine, and if the I²C bus is free, the user can resume communication by asserting a Start condition.

If a Start, Repeated Start, Stop or Acknowledge condition was in progress when the bus collision occurred, the condition is aborted, the SDA and SCL lines are deasserted, and the respective control bits in the SSPCON2 register are cleared. When the user services the bus collision Interrupt Service Routine, and if the I²C bus is free, the user can resume communication by asserting a Start condition.

The master will continue to monitor the SDA and SCL pins. If a Stop condition occurs, the SSPIF bit will be set.

A write to the SSPBUF will start the transmission of data at the first data bit regardless of where the transmitter left off when the bus collision occurred.

In Multi-Master mode, the interrupt generation on the detection of Start and Stop conditions allows the determination of when the bus is free. Control of the I²C bus can be taken when the P bit is set in the SSPSTAT register or the bus is Idle and the S and P bits are cleared.

FIGURE 17-25: BUS COLLISION TIMING FOR TRANSMIT AND ACKNOWLEDGE

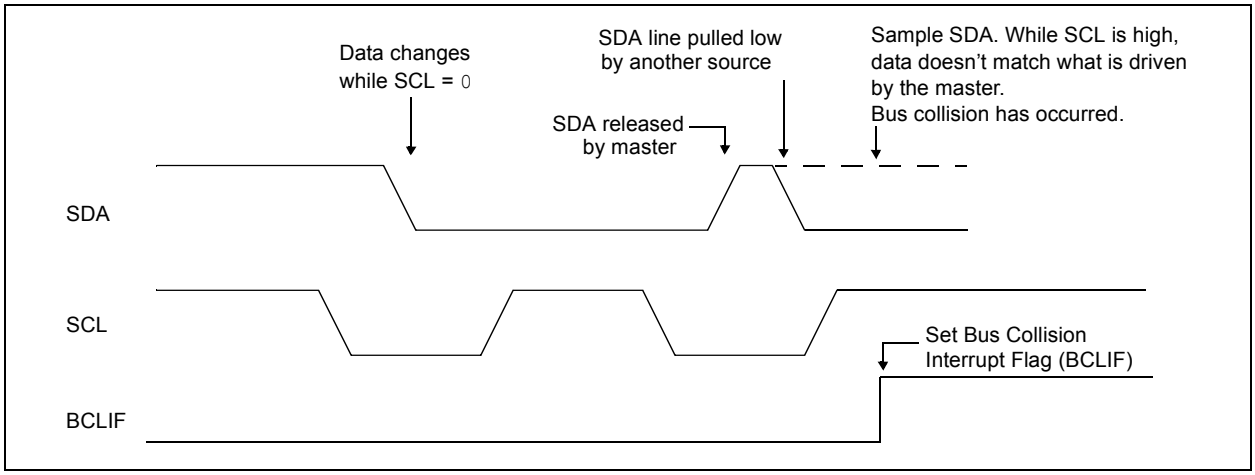

17.4.17.1 Bus Collision During a Start Condition

During a Start condition, a bus collision occurs if:

a) SDA or SCL is sampled low at the beginning of the Start condition (Figure 17-26).

b) SCL is sampled low before SDA is asserted low (Figure 17-27).

During a Start condition, both the SDA and the SCL pins are monitored.

If the SDA pin is already low or the SCL pin is already low, then all of the following occur:

- The Start condition is aborted
- The BCLIF flag is set
- The MSSP module is reset to its Idle state (Figure 17-26)

The Start condition begins with the SDA and SCL pins deasserted. When the SDA pin is sampled high, the Baud Rate Generator is loaded from SSPADD<6:0> and counts down to 0. If the SCL pin is sampled low while SDA is high, a bus collision occurs because it is assumed that another master is attempting to drive a data '1' during the Start condition.

If the SDA pin is sampled low during this count, the BRG is reset and the SDA line is asserted early (Figure 17-28). If, however, a '1' is sampled on the SDA pin, the SDA pin is asserted low at the end of the BRG count. The Baud Rate Generator is then reloaded and counts down to 0 and during this time, if the SCL pins are sampled as '0', a bus collision does not occur. At the end of the BRG count, the SCL pin is asserted low.

Note:	The reason that bus collision is not a factor during a Start condition is that no two bus masters can assert a Start condition at the exact same time. Therefore, one master will always assert SDA before the other. This condition does not cause a bus collision because the two masters must be allowed to arbitrate the first address following the Start condition. If the address is the same, arbitration must be allowed to continue into the data portion, Repeated Start or Stop conditions.

FIGURE 17-26: BUS COLLISION DURING START CONDITION (SDA ONLY)

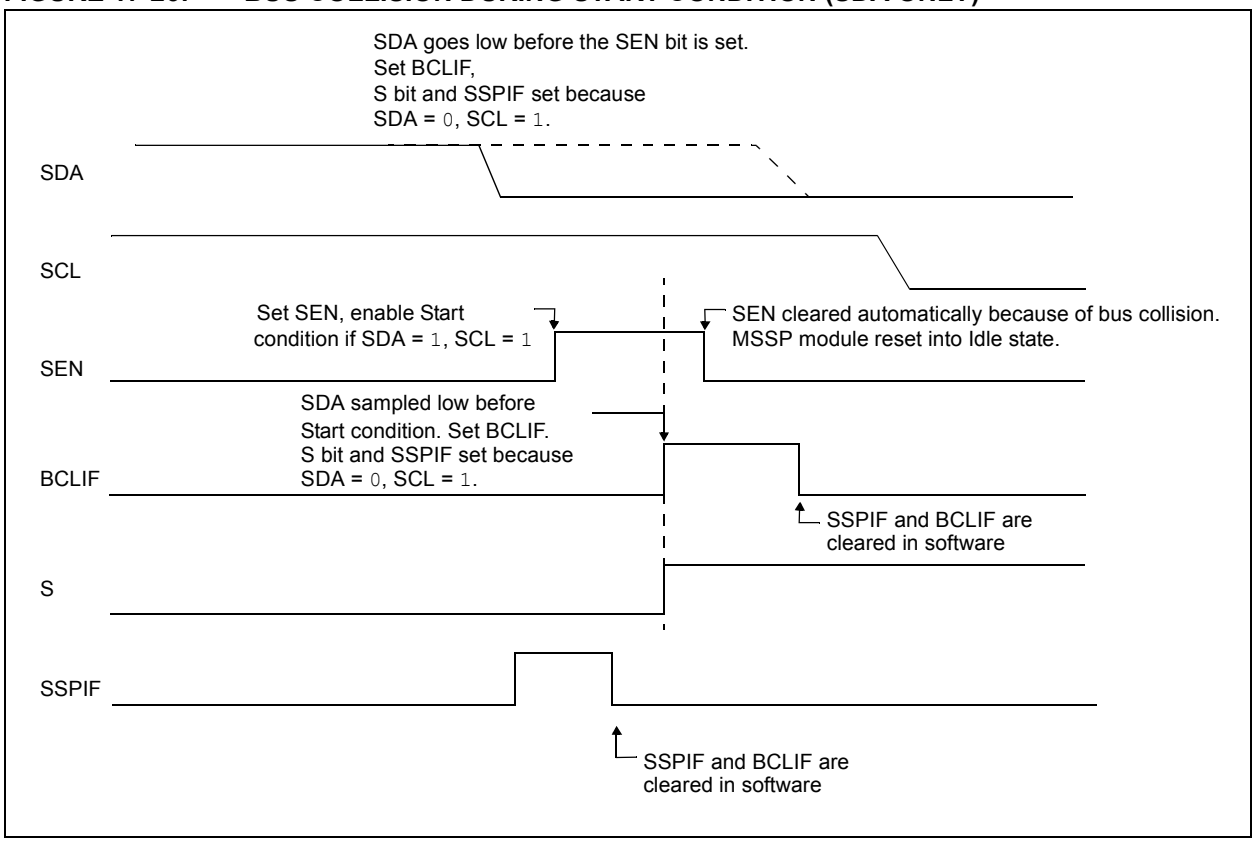

© 2007 Microchip Technology Inc.

FIGURE 17-27: BUS COLLISION DURING START CONDITION (SCL = 0)

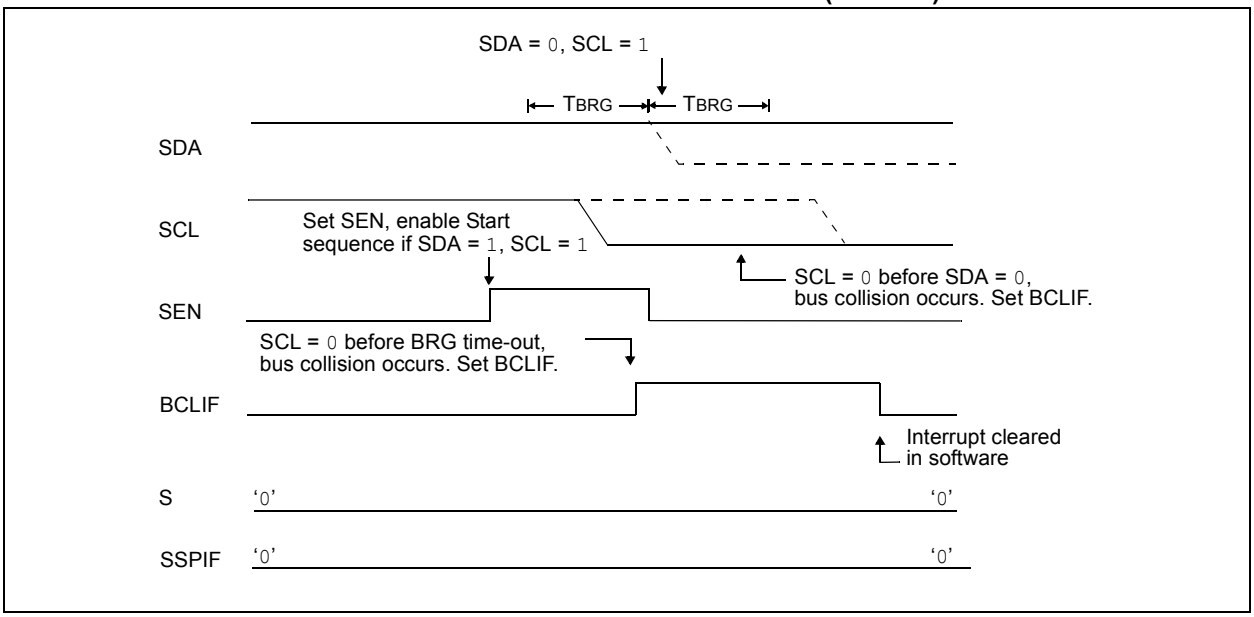

FIGURE 17-28: BRG RESET DUE TO SDA ARBITRATION DURING START CONDITION

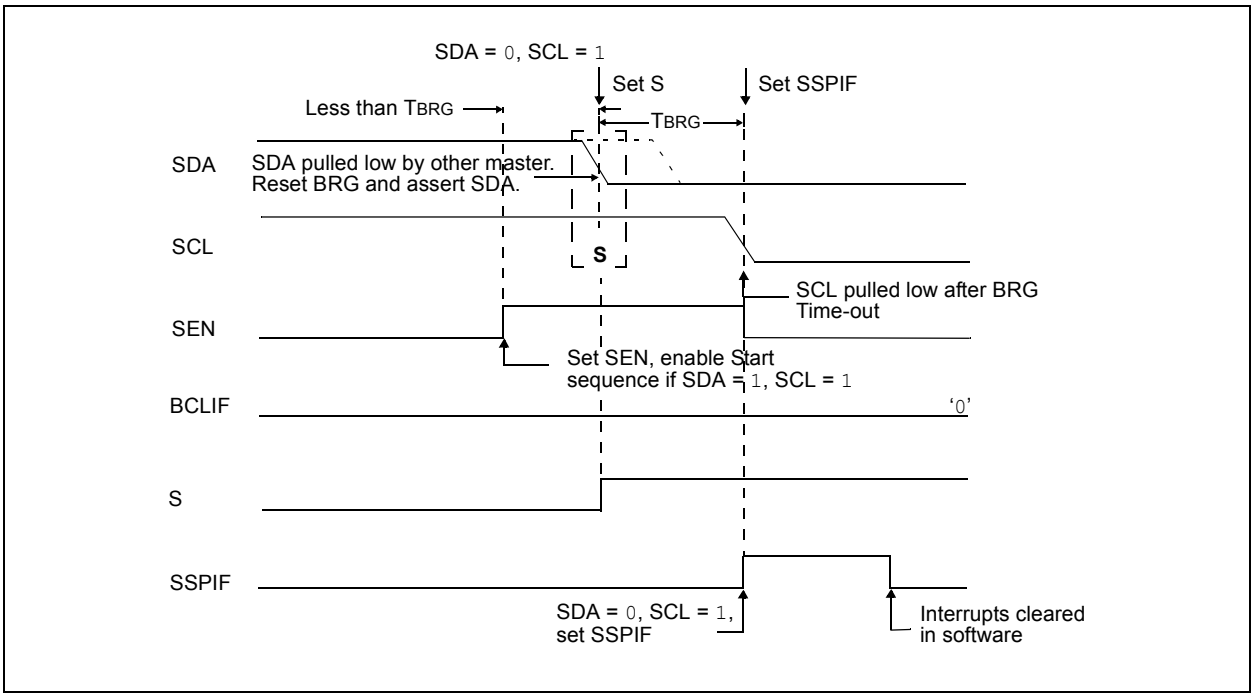

17.4.17.2 Bus Collision During a Repeated Start Condition

During a Repeated Start condition, a bus collision occurs if:

a) A low level is sampled on SDA when SCL goes from low level to high level.

b) SCL goes low before SDA is asserted low, indicating that another master is attempting to transmit a data '1'.

When the user deasserts SDA and the pin is allowed to float high, the BRG is loaded with SSPADD<6:0> and counts down to 0. The SCL pin is then deasserted and when sampled high, the SDA pin is sampled.

If SDA is low, a bus collision has occurred (i.e., another master is attempting to transmit a data '0', Figure 17-29). If SDA is sampled high, the BRG is reloaded and begins counting. If SDA goes from high-to-low before the BRG times out, no bus collision occurs because no two masters can assert SDA at exactly the same time.

If SCL goes from high-to-low before the BRG times out and SDA has not already been asserted, a bus collision occurs. In this case, another master is attempting to transmit a data '1' during the Repeated Start condition (see Figure 17-30).

If at the end of the BRG time-out, both SCL and SDA are still high, the SDA pin is driven low and the BRG is reloaded and begins counting. At the end of the count regardless of the status of the SCL pin, the SCL pin is driven low and the Repeated Start condition is complete.

FIGURE 17-29: BUS COLLISION DURING A REPEATED START CONDITION (CASE 1)

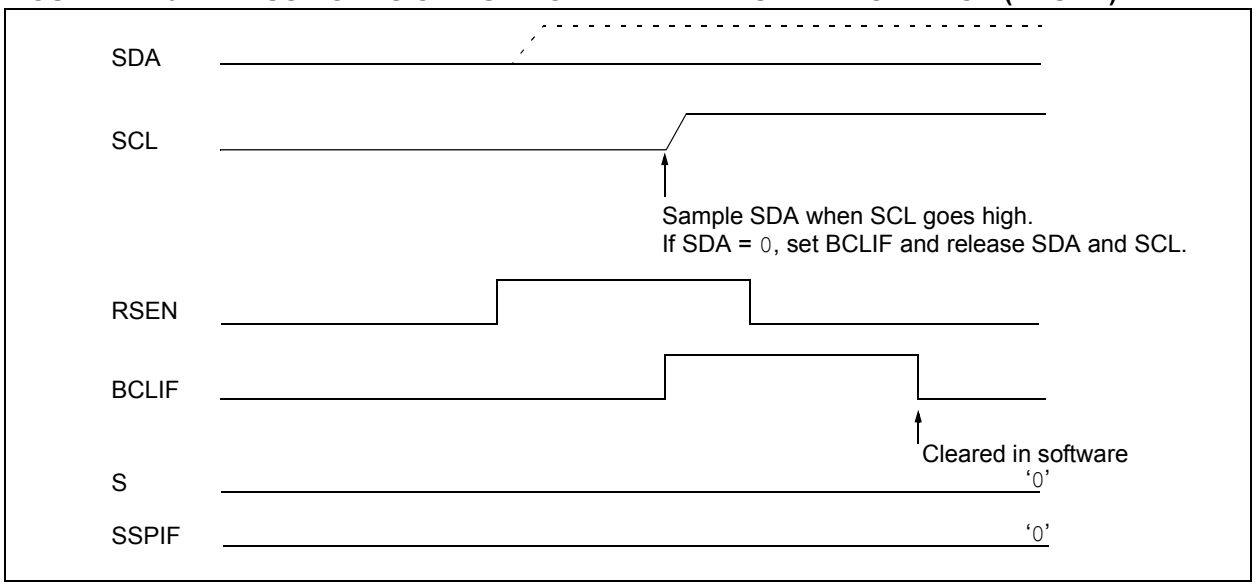

FIGURE 17-30: BUS COLLISION DURING A REPEATED START CONDITION (CASE 2)

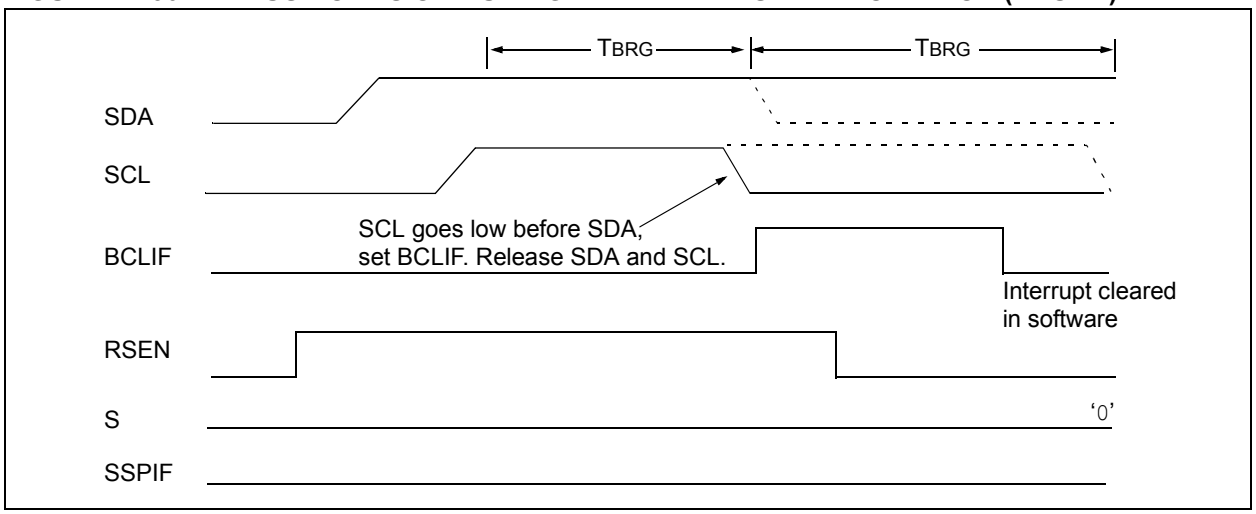

© 2007 Microchip Technology Inc.

17.4.17.3 Bus Collision During a Stop Condition

Bus collision occurs during a Stop condition if:

a) After the SDA pin has been deasserted and allowed to float high, SDA is sampled low after the BRG has timed out.

b) After the SCL pin is deasserted, SCL is sampled low before SDA goes high.

The Stop condition begins with SDA asserted low. When SDA is sampled low, the SCL pin is allowed to float. When the pin is sampled high (clock arbitration), the Baud Rate Generator is loaded with SSPADD<6:0> and counts down to 0. After the BRG times out, SDA is sampled. If SDA is sampled low, a bus collision has occurred. This is due to another master attempting to drive a data '0' (Register 17-31). If the SCL pin is sampled low before SDA is allowed to float high, a bus collision occurs. This is another case of another master attempting to drive a data '0' (Figure 17-32).

FIGURE 17-31: BUS COLLISION DURING A STOP CONDITION (CASE 1)

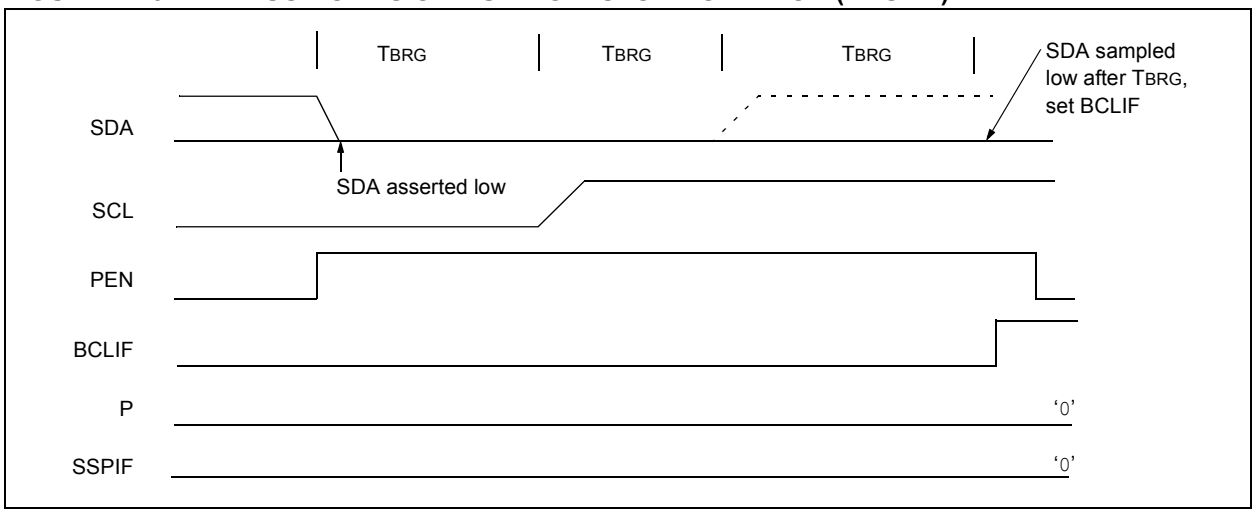

FIGURE 17-32: BUS COLLISION DURING A STOP CONDITION (CASE 2)

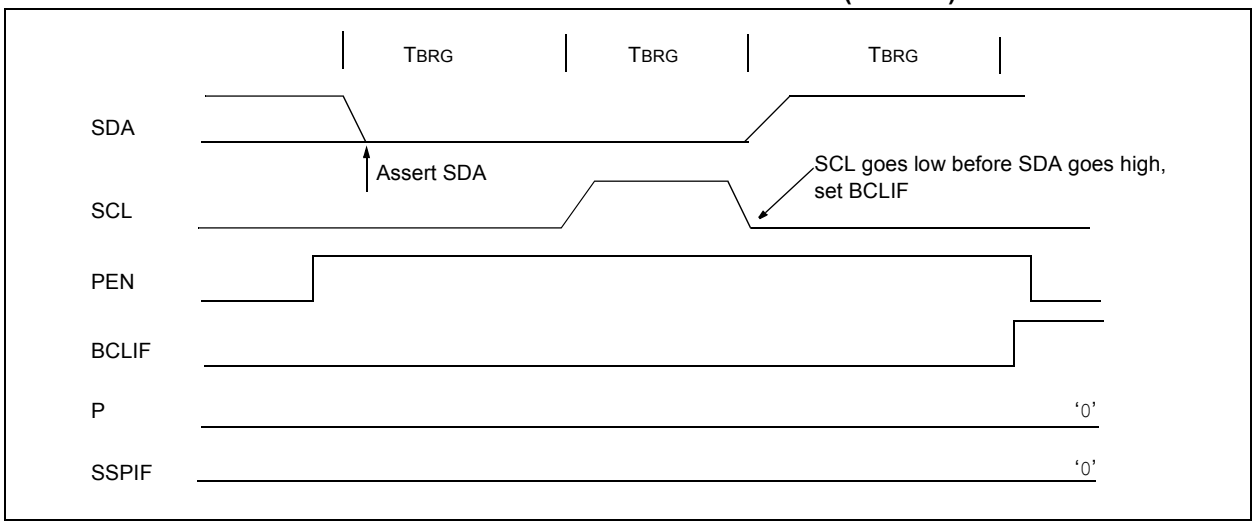

NOTES:

© 2007 Microchip Technology Inc.

18.0 ADDRESSABLE UNIVERSAL SYNCHRONOUS ASYNCHRONOUS RECEIVER TRANSMITTER (USART)

The Universal Synchronous Asynchronous Receiver Transmitter (USART) module is one of the two serial I/O modules available in the PIC18F2X20/4X20 family of microcontrollers. (USART is also known as a Serial Communications Interface or SCI.) The USART can be configured as a full-duplex asynchronous system that can communicate with peripheral devices, such as CRT terminals and personal computers, or it can be configured as a half-duplex synchronous system that can communicate with peripheral devices, such as A/D or D/A integrated circuits, serial EEPROMs, etc.

The USART can be configured in the following modes:

- Asynchronous (full-duplex)
- Synchronous – Master (half-duplex)
- Synchronous – Slave (half-duplex)

The RC6/TX/CK and RC7/RX/DT pins must be configured as shown for use with the Universal Synchronous Asynchronous Receiver Transmitter:

- SPEN (RCSTA<7>) bit must be set (= 1)
- TRISC<7> bit must be set (= 1)
- TRISC<6> bit must be cleared (= 0)

Register 18-1 shows the Transmit Status and Control register (TXSTA) and Register 18-2 shows the Receive Status and Control register (RCSTA).

18.1 Asynchronous Operation in Power-Managed Modes

The USART may operate in Asynchronous mode while the peripheral clocks are being provided by the internal oscillator block. This mode makes it possible to remove the crystal or resonator that is commonly connected as the primary clock on the OSC1 and OSC2 pins.

The factory calibrates the internal oscillator block output (INTOSC) for 8 MHz. However, this frequency may drift as V_{DD} or temperature changes and this directly affects the asynchronous baud rate. Two methods may be used to adjust the baud rate clock, but both require a reference clock source of some kind.

The first (preferred) method uses the OSCTUNE register to adjust the INTOSC output back to 8 MHz. Adjusting the value in the OSCTUNE register allows for fine resolution changes to the system clock source (see **Section 3.6 "INTOSC Frequency Drift"** for more information).

The other method adjusts the value in the Baud Rate Generator since there may be not be fine enough resolution when adjusting the Baud Rate Generator to compensate for a gradual change in the peripheral clock frequency.

REGISTER 18-1: TXSTA: TRANSMIT STATUS AND CONTROL REGISTER

R/W-0	R/W-0	R/W-0	R/W-0	U-0	R/W-0	R-1	R/W-0
CSRC	TX9	TXEN(1)	SYNC	—	BRGH	TRMT	TX9D
bit 7							bit 0

Legend:			
R = Readable bit	W = Writable bit	U = Unimplemented bit, read as '0'	
-n = Value at POR	'1' = Bit is set	'0' = Bit is cleared	x = Bit is unknown

bit 7 **CSRC:** Clock Source Select bit
Asynchronous mode:
Don't care.
Synchronous mode:
1 = Master mode (clock generated internally from BRG)
0 = Slave mode (clock from external source)

bit 6 **TX9:** 9-Bit Transmit Enable bit
1 = Selects 9-bit transmission
0 = Selects 8-bit transmission

bit 5 **TXEN:** Transmit Enable bit(1)
1 = Transmit enabled
0 = Transmit disabled

bit 4 **SYNC:** EUSART Mode Select bit
1 = Synchronous mode
0 = Asynchronous mode

bit 3 **Unimplemented:** Read as '0'

bit 2 **BRGH:** High Baud Rate Select bit
Asynchronous mode:
1 = High speed
0 = Low speed
Synchronous mode:
Unused in this mode.

bit 1 **TRMT:** Transmit Shift Register Status bit
1 = TSR empty
0 = TSR full

bit 0 **TX9D:** 9th bit of Transmit Data
Can be address/data bit or a parity bit.

Note 1: SREN/CREN overrides TXEN in Sync mode.

© 2007 Microchip Technology Inc.

REGISTER 18-2: RCSTA: RECEIVE STATUS AND CONTROL REGISTER

R/W-0	R/W-0	R/W-0	R/W-0	R/W-0	R-0	R-0	R-x
SPEN	RX9	SREN	CREN	ADDEN	FERR	OERR	RX9D
bit 7							bit 0

Legend:			
R = Readable bit	W = Writable bit	U = Unimplemented bit, read as '0'	
-n = Value at POR	'1' = Bit is set	'0' = Bit is cleared	x = Bit is unknown

bit 7 **SPEN:** Serial Port Enable bit
1 = Serial port enabled (configures RX/DT and TX/CK pins as serial port pins)
0 = Serial port disabled (held in Reset)

bit 6 **RX9:** 9-Bit Receive Enable bit
1 = Selects 9-bit reception
0 = Selects 8-bit reception

bit 5 **SREN:** Single Receive Enable bit
Asynchronous mode:
Don't care.
Synchronous mode – Master:
1 = Enables single receive
0 = Disables single receive
This bit is cleared after reception is complete.
Synchronous mode – Slave:
Don't care.

bit 4 **CREN:** Continuous Receive Enable bit
Asynchronous mode:
1 = Enables receiver
0 = Disables receiver
Synchronous mode:
1 = Enables continuous receive until enable bit, CREN, is cleared (CREN overrides SREN)
0 = Disables continuous receive

bit 3 **ADDEN:** Address Detect Enable bit
Asynchronous mode 9-bit (RX9 = 1):
1 = Enables address detection, enables interrupt and loads the receive buffer when RSR<8> is set
0 = Disables address detection, all bytes are received and ninth bit can be used as parity bit

bit 2 **FERR:** Framing Error bit
1 = Framing error (can be updated by reading RCREG register and receiving next valid byte)
0 = No framing error

bit 1 **OERR:** Overrun Error bit
1 = Overrun error (can be cleared by clearing bit CREN)
0 = No overrun error

bit 0 **RX9D:** 9th bit of Received Data
This can be address/data bit or a parity bit and must be calculated by user firmware.

18.2 USART Baud Rate Generator (BRG)

The BRG supports both the Asynchronous and Synchronous modes of the USART. It is a dedicated 8-bit Baud Rate Generator. The SPBRG register controls the period of a free-running 8-bit timer. In Asynchronous mode, bit BRGH (TXSTA<2>) also controls the baud rate. In Synchronous mode, bit BRGH is ignored. Table 18-1 shows the formula for computation of the baud rate for different USART modes which only apply in Master mode (internal clock).

Given the desired baud rate and FOSC, the nearest integer value for the SPBRG register can be calculated using the formula in Table 18-1. From this, the error in baud rate can be determined.

Example 18-1 shows the calculation of the baud rate error for the following conditions:

- FOSC = 16 MHz
- Desired Baud Rate = 9600
- BRGH = 0
- SYNC = 0

It may be advantageous to use the high baud rate (BRGH = 1), even for slower baud clocks, because the FOSC/(16 (X + 1)) equation can reduce the baud rate error in some cases.

Writing a new value to the SPBRG register causes the BRG timer to be reset (or cleared). This ensures the BRG does not wait for a timer overflow before outputting the new baud rate.

18.2.1 POWER-MANAGED MODE OPERATION

The system clock is used to generate the desired baud rate; however, when a power-managed mode is entered, the clock source may be operating at a different frequency than in PRI_RUN mode. In Sleep mode, no clocks are present and in PRI_IDLE, the primary clock source continues to provide clocks to the baud rate generator; however, in other power-managed modes, the clock frequency will probably change. This may require the value in SPBRG to be adjusted.

18.2.2 SAMPLING

The data on the RC7/RX/DT pin is sampled three times by a majority detect circuit to determine if a high or a low level is present at the RX pin.

EXAMPLE 18-1: CALCULATING BAUD RATE ERROR

Desired Baud Rate = FOSC/(64 (X + 1))

Solving for X:

X = ((FOSC/Desired Baud Rate)/64) – 1
X = ((16000000/9600)/64) – 1
X = [25.042] = 25

Calculated Baud Rate = 16000000/(64 (25 + 1))
= 9615

Error = (Calculated Baud Rate – Desired Baud Rate)

Desired Baud Rate

= (9615 – 9600)/9600
= 0.16%

TABLE 18-1: BAUD RATE FORMULA

SYNC	BRGH = 0 (Low Speed)	BRGH = 1 (High Speed)
0 (Asynchronous)	Baud Rate = FOSC/(64 (X + 1))	Baud Rate = FOSC/(16 (X + 1))
1 (Synchronous)	Baud Rate = FOSC/(4 (X + 1))	N/A

Legend: X = value in SPBRG (0 to 255)

TABLE 18-2: REGISTERS ASSOCIATED WITH BAUD RATE GENERATOR

Name	Bit 7	Bit 6	Bit 5	Bit 4	Bit 3	Bit 2	Bit 1	Bit 0	Value on POR, BOR	Value on all other Resets
TXSTA	CSRC	TX9	TXEN	SYNC	—	BRGH	TRMT	TX9D	0000 -010	0000 -010
RCSTA	SPEN	RX9	SREN	CREN	ADDEN	FERR	OERR	RX9D	0000 000x	0000 000x
SPBRG	Baud Rate Generator Register								0000 0000	0000 0000

Legend: x = unknown, - = unimplemented, read as '0'. Shaded cells are not used by the BRG.

© 2007 Microchip Technology Inc.

TABLE 18-3: BAUD RATES FOR ASYNCHRONOUS MODE (BRGH = 0, LOW SPEED)

BAUD RATE (K)	Fosc = 40.000 MHz			Fosc = 20.000 MHz			Fosc = 16.000 MHz			Fosc = 10.000 MHz		
	Actual Rate (K)	% Error	SPBRG value (decimal)	Actual Rate (K)	% Error	SPBRG value (decimal)	Actual Rate (K)	% Error	SPBRG value (decimal)	Actual Rate (K)	% Error	SPBRG value (decimal)
0.3	—	—	—	—	—	—	0.98	225.52	255	0.61	103.45	255
1.2	—	—	—	1.22	1.73	255	1.20	0.16	207	1.20	0.16	129
2.4	2.44	1.73	255	2.40	0.16	129	2.40	0.16	103	2.40	0.16	64
9.6	9.62	0.16	64	9.47	-1.36	32	9.62	0.16	25	9.77	1.73	15
19.2	18.94	-1.36	32	19.53	1.73	15	19.23	0.16	12	19.53	1.73	7
38.4	39.06	1.73	15	39.06	1.73	7	35.71	-6.99	6	39.06	1.73	3
57.6	56.82	-1.36	10	62.50	8.51	4	62.50	8.51	3	52.08	-9.58	2
76.8	78.13	1.73	7	78.13	1.73	3	83.33	8.51	2	78.13	1.73	1
96.0	89.29	-6.99	6	104.17	8.51	2	—	—	—	—	—	—
115.2	125.00	8.51	4	—	—	—	125.00	8.51	1	78.13	-32.18	1
250.0	208.33	-16.67	2	—	—		250.00	0.00	0	—	—	—
300.0	312.50	4.17	1	312.50	4.17	0	—	—	—	—	—	—
625.0	625.00	0.00	0	—	—	—	—	—	—	—	—	—

BAUD RATE (K)	Fosc = 8.000000 MHz			Fosc = 7.159090 MHz			Fosc = 5.068800 MHz			Fosc = 4.000000 MHz		
	Actual Rate (K)	% Error	SPBRG value (decimal)	Actual Rate (K)	% Error	SPBRG value (decimal)	Actual Rate (K)	% Error	SPBRG value (decimal)	Actual Rate (K)	% Error	SPBRG value (decimal)
0.3	0.49	62.76	255	0.44	45.65	255	0.31	3.13	255	0.30	0.16	207
1.2	1.20	0.16	103	1.20	0.23	92	1.20	0.00	65	1.20	0.16	51
2.4	2.40	0.16	51	2.38	-0.83	46	2.40	0.00	32	2.40	0.16	25
9.6	9.62	0.16	12	9.32	-2.90	11	9.90	3.13	7	8.93	-6.99	6
19.2	17.86	-6.99	6	18.64	-2.90	5	19.80	3.13	3	20.83	8.51	2
38.4	41.67	8.51	2	37.29	-2.90	2	39.60	3.13	1	31.25	-18.62	1
57.6	62.50	8.51	1	55.93	-2.90	1	—	—	—	62.50	8.51	0
—	—	—	—	—	—	—	79.20	3.13	0	—	—	—
115.2	125.00	8.51	0	111.86	-2.90	0	—	—	—	—	—	—

BAUD RATE (K)	Fosc = 3.579545 MHz			Fosc = 2.000000 MHz			Fosc = 1.000000 MHz			Fosc = 0.032768 MHz		
	Actual Rate (K)	% Error	SPBRG value (decimal)	Actual Rate (K)	% Error	SPBRG value (decimal)	Actual Rate (K)	% Error	SPBRG value (decimal)	Actual Rate (K)	% Error	SPBRG value (decimal)
0.3	0.30	0.23	185	0.30	0.16	103	0.30	0.16	51	0.26	-14.67	1
1.2	1.19	-0.83	46	1.20	0.16	25	1.20	0.16	12	—	—	—
2.4	2.43	1.32	22	2.40	0.16	12	2.23	-6.99	6	—	—	—
9.6	9.32	-2.90	5	10.42	8.51	2	7.81	-18.62	1	—	—	—
19.2	18.64	-2.90	2	15.63	-18.62	1	15.63	-18.62	0	—	—	—
38.4	—	—	—	31.25	-18.62	0	—	—	—	—	—	—
57.6	55.93	-2.90	0	—	—	—	—	—	—	—	—	—

TABLE 18-4: BAUD RATES FOR ASYNCHRONOUS MODE (BRGH = 1, HIGH SPEED)

BAUD RATE (K)	Fosc = 40.000 MHz			Fosc = 20.000 MHz			Fosc = 16.000 MHz			Fosc = 10.000 MHz		
	Actual Rate (K)	% Error	SPBRG value (decimal)	Actual Rate (K)	% Error	SPBRG value (decimal)	Actual Rate (K)	% Error	SPBRG value (decimal)	Actual Rate (K)	% Error	SPBRG value (decimal)
2.4	—	—	—	4.88	103.45	255	3.91	62.76	255	2.44	1.73	255
9.6	9.77	1.73	255	9.62	0.16	129	9.62	0.16	103	9.63	0.16	64
19.2	19.23	0.16	129	19.23	0.16	64	19.23	0.16	51	18.94	-1.36	32
38.4	38.46	0.16	64	37.88	-1.36	32	38.46	0.16	25	39.06	1.73	15
57.6	58.14	0.94	42	56.82	-1.36	21	58.82	2.12	16	56.82	-1.36	10
76.8	75.76	-1.36	32	78.13	1.73	15	76.92	0.16	12	78.13	1.73	7
96.0	96.15	0.16	25	96.15	0.16	12	100.00	4.17	9	89.29	-6.99	6
115.2	113.64	-1.36	21	113.64	-1.36	10	111.11	-3.55	8	125.00	8.51	4
250.0	250.00	0.00	9	250.00	0.00	4	250.00	0.00	3	208.33	-16.67	2
300.0	312.50	4.17	7	312.50	4.17	3	333.33	11.11	2	312.50	4.17	1
500.0	500.00	0.00	4	416.67	-16.67	2	500.00	0.00	1	—	—	—
625.0	625.00	0.00	3	625.00	0.00	1	—	—	—	625.00	0.00	0
1000.0	833.33	-16.67	2	—	—	—	1000.00	0.00	0	—	—	—
1250.0	1250.00	0.00	1	1250.00	0.00	0	—	—	—	—	—	—

BAUD RATE (K)	Fosc = 8.000000 MHz			Fosc = 7.159090 MHz			Fosc = 5.068800 MHz			Fosc = 4.000 MHz		
	Actual Rate (K)	% Error	SPBRG value (decimal)	Actual Rate (K)	% Error	SPBRG value (decimal)	Actual Rate (K)	% Error	SPBRG value (decimal)	Actual Rate (K)	% Error	SPBRG value (decimal)
0.3	—	—	—	—	—	—	—	—	—	0.98	225.52	255
1.2	1.95	62.76	255	1.75	45.65	255	1.24	3.13	255	1.20	0.16	207
2.4	2.40	0.16	207	2.41	0.23	185	2.40	0.00	131	2.40	0.16	103
9.6	9.62	0.16	51	9.52	-0.83	46	9.60	0.00	32	9.62	0.16	25
19.2	19.23	0.16	25	19.45	1.32	22	18.64	-2.94	16	19.23	0.16	12
38.4	38.46	0.16	12	37.29	-2.90	11	39.60	3.13	7	35.71	-6.99	6
57.6	55.56	-3.55	8	55.93	-2.90	7	52.80	-8.33	5	62.50	8.51	3
76.8	71.43	-6.99	6	74.57	-2.90	5	79.20	3.13	3	83.33	8.51	2
96.0	100.00	4.17	4	89.49	-6.78	4	—	—	—	—	—	—
115.2	125.00	8.51	3	111.86	-2.90	3	105.60	-8.33	2	125.00	8.51	1
250.0	250.00	0.00	1	223.72	-10.51	1	—	—	—	250.00	0.00	0
300.0	—	—	—	—	—	—	316.80	5.60	0	—	—	—
500.0	500.00	0.00	0	447.44	-10.51	0	—	—	—	—	—	—

BAUD RATE (K)	Fosc = 3.579545 MHz			Fosc = 2.000000 MHz			Fosc = 1.000000 MHz			Fosc = 0.032768 MHz		
	Actual Rate (K)	% Error	SPBRG value (decimal)	Actual Rate (K)	% Error	SPBRG value (decimal)	Actual Rate (K)	% Error	SPBRG value (decimal)	Actual Rate (K)	% Error	SPBRG value (decimal)
0.3	0.87	191.30	255	0.49	62.76	255	0.30	0.16	207	0.29	-2.48	6
1.2	1.20	0.23	185	1.20	0.16	103	1.20	0.16	51	1.02	-14.67	1
2.4	2.41	0.23	92	2.40	0.16	51	2.40	0.16	25	2.05	-14.67	0
9.6	9.73	1.32	22	9.62	0.16	12	8.93	-6.99	6	—	—	—
19.2	18.64	-2.90	11	17.86	-6.99	6	20.83	8.51	2	—	—	—
38.4	37.29	-2.90	5	41.67	8.51	2	31.25	-18.62	1	—	—	—
57.6	55.93	-2.90	3	62.50	8.51	1	62.50	8.51	0	—	—	—
76.8	74.57	-2.90	2	—	—	—	—	—	—	—	—	—
115.2	111.86	-2.90	1	125.00	8.51	0	—	—	—	—	—	—
250.0	223.72	-10.51	0	—	—	—	—	—	—	—	—	—

© 2007 Microchip Technology Inc.

TABLE 18-5: BAUD RATES FOR SYNCHRONOUS MODE (SYNC = 1)

BAUD RATE (K)	Fosc = 40.000 MHz			Fosc = 20.000 MHz			Fosc = 16.000 MHz			Fosc = 10.000 MHz		
	Actual Rate (K)	% Error	SPBRG value (decimal)	Actual Rate (K)	% Error	SPBRG value (decimal)	Actual Rate (K)	% Error	SPBRG value (decimal)	Actual Rate (K)	% Error	SPBRG value (decimal)
9.6	—	—	—	—	—	—	15.63	62.76	255	9.77	1.73	255
19.2	—	—	—	19.53	1.73	255	19.23	0.16	207	19.23	0.16	129
38.4	39.06	1.73	255	38.46	0.16	129	38.46	0.16	103	38.46	0.16	64
57.6	57.47	-0.22	173	57.47	-0.22	86	57.97	0.64	68	58.14	0.94	42
76.8	76.92	0.16	129	76.92	0.16	64	76.92	0.16	51	75.76	-1.36	32
96.0	96.15	0.16	103	96.15	0.16	51	95.24	-0.79	41	96.15	0.16	25
250.0	250.00	0.00	39	250.00	0.00	19	250.00	0.00	15	250.00	0.00	9
300.0	303.03	1.01	32	294.12	-1.96	16	307.69	2.56	12	312.50	4.17	7
500.0	500.00	0.00	19	500.00	0.00	9	500.00	0.00	7	500.00	0.00	4
625.0	625.00	0.00	15	625.00	0.00	7	666.67	6.67	5	625.00	0.00	3
1000.0	1000.00	0.00	9	1000.00	0.00	4	1000.00	0.00	3	833.33	-16.67	2
1250.0	1250.00	0.00	7	1250.00	0.00	3	1333.33	6.67	2	1250.00	0.00	1

BAUD RATE (K)	Fosc = 8.000000 MHz			Fosc = 7.159090 MHz			Fosc = 5.068800 MHz			Fosc = 4.000 MHz		
	Actual Rate (K)	% Error	SPBRG value (decimal)	Actual Rate (K)	% Error	SPBRG value (decimal)	Actual Rate (K)	% Error	SPBRG value (decimal)	Actual Rate (K)	% Error	SPBRG value (decimal)
2.4	7.81	225.52	255	6.99	191.30	255	4.95	106.25	255	3.91	62.76	255
9.6	9.62	0.16	207	9.62	0.23	185	9.60	0.00	131	9.62	0.16	103
19.2	19.23	0.16	103	19.24	0.23	92	19.20	0.00	65	19.23	0.16	51
38.4	38.46	0.16	51	38.08	-0.83	46	38.40	0.00	32	38.46	0.16	25
57.6	57.14	-0.79	34	57.73	0.23	30	57.60	0.00	21	58.82	2.12	16
76.8	76.92	0.16	25	77.82	1.32	22	74.54	-2.94	16	76.92	0.16	12
96.0	95.24	-0.79	20	94.20	-1.88	18	97.48	1.54	12	100.00	4.17	9
250.0	250.00	0.00	7	255.68	2.27	6	253.44	1.38	4	250.00	0.00	3
300.0	285.71	-4.76	6	298.30	-0.57	5	316.80	5.60	3	333.33	11.11	2
500.0	500.00	0.00	3	447.44	-10.51	3	422.40	-15.52	2	500.00	0.00	1
625.0	666.67	6.67	2	596.59	-4.55	2	633.60	1.38	1	—	—	—
1000.0	1000.00	0.00	1	894.89	-10.51	1	—	—	—	1000.00	0.00	0
1250.0	—	—	—	1789.77	43.18	0	1267.20	1.38	0	—	—	—

BAUD RATE (K)	Fosc = 3.579545 MHz			Fosc = 2.000000 MHz			Fosc = 1.000000 MHz			Fosc = 0.032768 MHz		
	Actual Rate (K)	% Error	SPBRG value (decimal)	Actual Rate (K)	% Error	SPBRG value (decimal)	Actual Rate (K)	% Error	SPBRG value (decimal)	Actual Rate (K)	% Error	SPBRG value (decimal)
0.3	—	—	—	—	—	—	0.98	225.52	255	0.30	1.14	26
1.2	—	—	—	1.95	62.76	255	1.20	0.16	207	1.17	-2.48	6
2.4	3.50	45.65	255	2.40	0.16	207	2.40	0.16	103	2.73	13.78	2
9.6	9.62	0.23	92	9.62	0.16	51	9.62	0.16	25	8.19	-14.67	0
19.2	19.04	-0.83	46	19.23	0.16	25	19,.23	0.16	12	—	—	—
38.4	38.91	1.32	22	38.46	0.16	12	35.71	-6.99	6	—	—	—
57.6	55.93	-2.90	15	55.56	-3.55	8	62.50	8.51	3	—	—	—
76.8	74.57	-2.90	11	71.43	-6.99	6	83.33	8.51	2	—	—	—
96.0	99.43	3.57	8	100.00	4.17	4	—	—	—	—	—	—
250.0	223.72	-10.51	3	250.00	0.00	1	250.00	0.00	0	—	—	—
500.0	447.44	-10.51	1	500.00	0.00	0	—	—	—	—	—	—

18.3 USART Asynchronous Mode

In this mode, the USART uses standard Non-Return-to-Zero (NRZ) format (one Start bit, eight or nine data bits and one Stop bit). The most common data format is 8 bits. An on-chip dedicated 8-bit Baud Rate Generator can be used to derive standard baud rate frequencies from the oscillator. The USART transmits and receives the LSb first. The USART's transmitter and receiver are functionally independent but use the same data format and baud rate. The Baud Rate Generator produces a clock, either x16 or x64 of the bit shift rate, depending on bit BRGH (TXSTA<2>). Parity is not supported by the hardware but can be implemented in software (and stored as the ninth data bit). Asynchronous mode functions in all power-managed modes except Sleep mode when call clock sources are stopped. When in PRI_IDLE mode, no changes to the Baud Rate Generator values are required; however, other power-managed mode clocks may operate at another frequency than the primary clock. Therefore, the Baud Rate generator values may need adjusting.

Asynchronous mode is selected by clearing bit, SYNC (TXSTA<4>).

The USART Asynchronous module consists of the following important elements:

- Baud Rate Generator
- Sampling Circuit
- Asynchronous Transmitter
- Asynchronous Receiver

18.3.1 USART ASYNCHRONOUS TRANSMITTER

The USART transmitter block diagram is shown in Figure 18-1. The heart of the transmitter is the Transmit (Serial) Shift Register (TSR). The shift register obtains its data from the Read/Write Transmit Buffer, TXREG. The TXREG register is loaded with data in software. The TSR register is not loaded until the Stop bit has been transmitted from the previous load. As soon as the Stop bit is transmitted, the TSR is loaded with new data from the TXREG register (if available). Once the TXREG register transfers the data to the TSR register (occurs in one TCY), the TXREG register is empty and flag bit, TXIF (PIR1<4>), is set. This interrupt can be enabled/disabled by setting/clearing enable bit, TXIE (PIE1<4>). Flag bit TXIF will be set regardless of the state of enable bit TXIE and cannot be cleared in software. Flag bit TXIF is not cleared immediately upon loading the Transmit Buffer register, TXREG. TXIF becomes valid in the second instruction cycle following the load instruction. Polling TXIF immediately following a load of TXREG will return invalid results. While flag bit TXIF indicated the status of the TXREG register, another bit, TRMT (TXSTA<1>), shows the status of the TSR register. Status bit TRMT is a read-only bit which is set when the TSR register is empty. No interrupt logic is tied to this bit, therefore, the user must poll this bit in order to determine whether the TSR register is empty.

Note 1:	The TSR register is not mapped in data memory so it is not available to the user.
2:	Flag bit, TXIF, is set when enable bit, TXEN, is set.

FIGURE 18-1: USART TRANSMIT BLOCK DIAGRAM

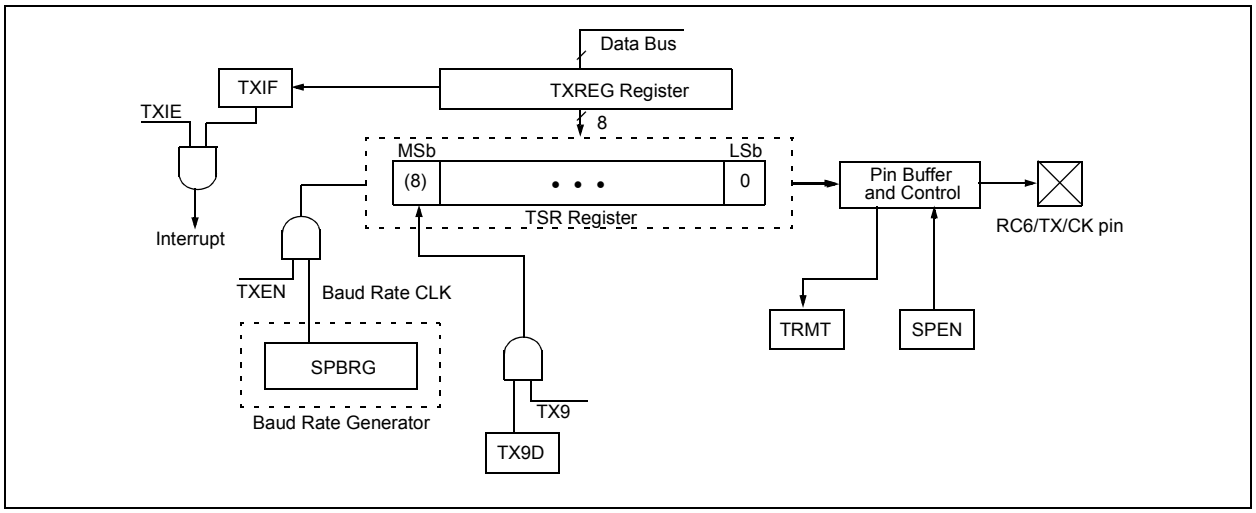

© 2007 Microchip Technology Inc.

FIGURE 18-2: ASYNCHRONOUS TRANSMISSION

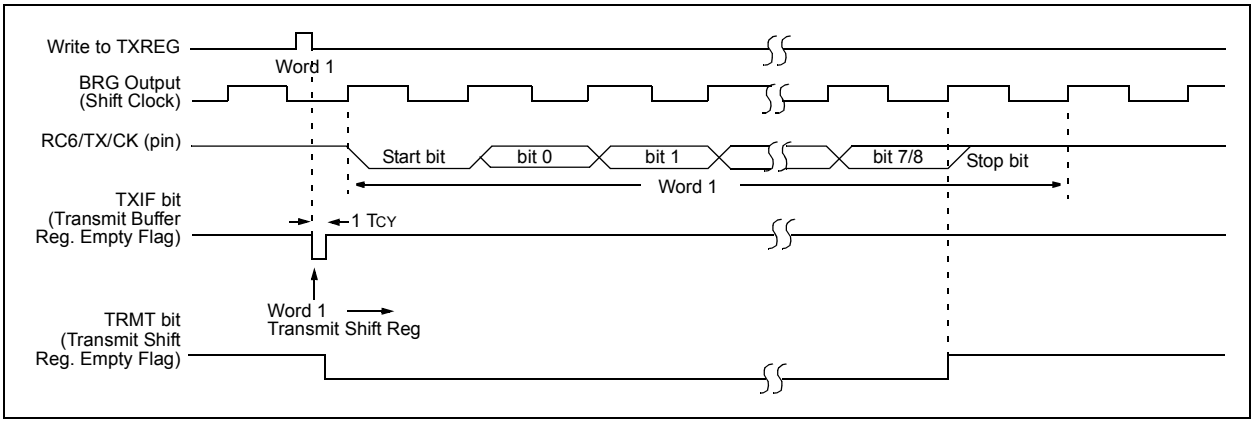

FIGURE 18-3: ASYNCHRONOUS TRANSMISSION (BACK TO BACK)

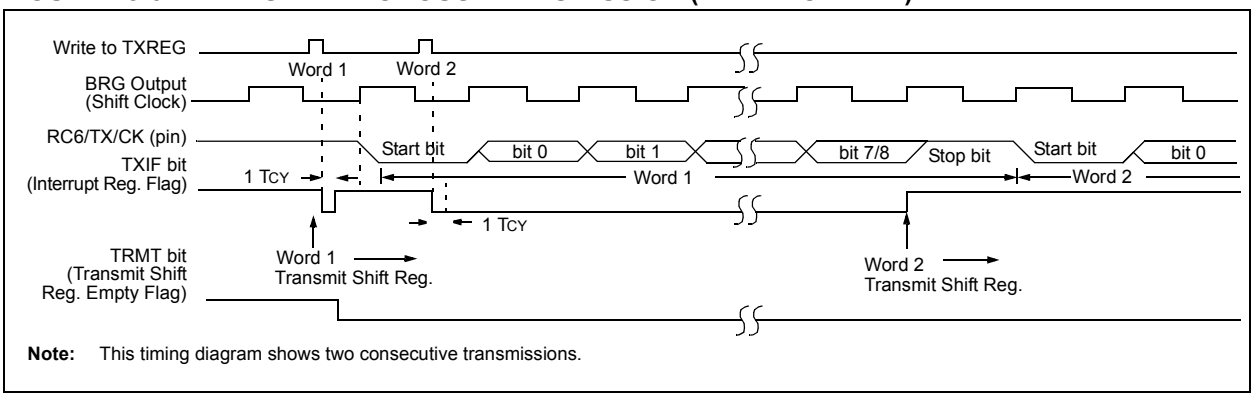

Note: This timing diagram shows two consecutive transmissions.

TABLE 18-6: REGISTERS ASSOCIATED WITH ASYNCHRONOUS TRANSMISSION

Name	Bit 7	Bit 6	Bit 5	Bit 4	Bit 3	Bit 2	Bit 1	Bit 0	Value on POR, BOR	Value on all other Resets
INTCON	GIE/GIEH	PEIE/GIEL	TMR0IE	INT0IE	RBIE	TMR0IF	INT0IF	RBIF	0000 000x	0000 000u
PIR1	PSPIF(1)	ADIF	RCIF	TXIF	SSPIF	CCP1IF	TMR2IF	TMR1IF	0000 0000	0000 0000
PIE1	PSPIE(1)	ADIE	RCIE	TXIE	SSPIE	CCP1IE	TMR2IE	TMR1IE	0000 0000	0000 0000
IPR1	PSPIP(1)	ADIP	RCIP	TXIP	SSPIP	CCP1IP	TMR2IP	TMR1IP	1111 1111	1111 1111
RCSTA	SPEN	RX9	SREN	CREN	ADDEN	FERR	OERR	RX9D	0000 000x	0000 000x
TXREG	USART Transmit Register								0000 0000	0000 0000
TXSTA	CSRC	TX9	TXEN	SYNC	—	BRGH	TRMT	TX9D	0000 -010	0000 -010
SPBRG	Baud Rate Generator Register								0000 0000	0000 0000

Legend: x = unknown, - = unimplemented locations read as '0'. Shaded cells are not used for asynchronous transmission.

Note 1: The PSPIF, PSPIE and PSPIP bits are reserved on the PIC18F2X20 devices; always maintain these bits clear.

18.3.2 USART ASYNCHRONOUS RECEIVER

The receiver block diagram is shown in Figure 18-4. The data is received on the RC7/RX/DT pin and drives the data recovery block. The data recovery block is actually a high-speed shifter, operating at x16 times the baud rate, whereas the main receive serial shifter operates at the bit rate or at FOSC. This mode would typically be used in RS-232 systems.

To set up an Asynchronous Reception:

1. Initialize the SPBRG register for the appropriate baud rate. If a high-speed baud rate is desired, set bit BRGH (**Section 18.2 "USART Baud Rate Generator (BRG)"**).
2. Enable the asynchronous serial port by clearing bit, SYNC, and setting bit, SPEN.
3. If interrupts are desired, set enable bit, RCIE.
4. If 9-bit reception is desired, set bit, RX9.
5. Enable the reception by setting bit, CREN.
6. Flag bit, RCIF, will be set when reception is complete and an interrupt will be generated if enable bit, RCIE, was set.
7. Read the RCSTA register to get the ninth bit (if enabled) and determine if any error occurred during reception.
8. Read the 8-bit received data by reading the RCREG register.
9. If any error occurred, clear the error by clearing enable bit, CREN.
10. If using interrupts, ensure that the GIE and PEIE bits in the INTCON register (INTCON<7:6>) are set.

18.3.3 SETTING UP 9-BIT MODE WITH ADDRESS DETECT

This mode would typically be used in RS-485 systems. To set up an Asynchronous Reception with address detect enable:

1. Initialize the SPBRG register for the appropriate baud rate. If a high-speed baud rate is required, set the BRGH bit.
2. Enable the asynchronous serial port by clearing the SYNC bit and setting the SPEN bit.
3. If interrupts are required, set the RCEN bit and select the desired priority level with the RCIP bit.
4. Set the RX9 bit to enable 9-bit reception.
5. Set the ADDEN bit to enable address detect.
6. Enable reception by setting the CREN bit.
7. The RCIF bit will be set when reception is complete. The interrupt will be Acknowledged if the RCIE and GIE bits are set.
8. Read the RCSTA register to determine if any error occurred during reception, as well as read bit 9 of data (if applicable).
9. Read RCREG to determine if the device is being addressed.
10. If any error occurred, clear the CREN bit.
11. If the device has been addressed, clear the ADDEN bit to allow all received data into the receive buffer and interrupt the CPU.

FIGURE 18-4: USART RECEIVE BLOCK DIAGRAM

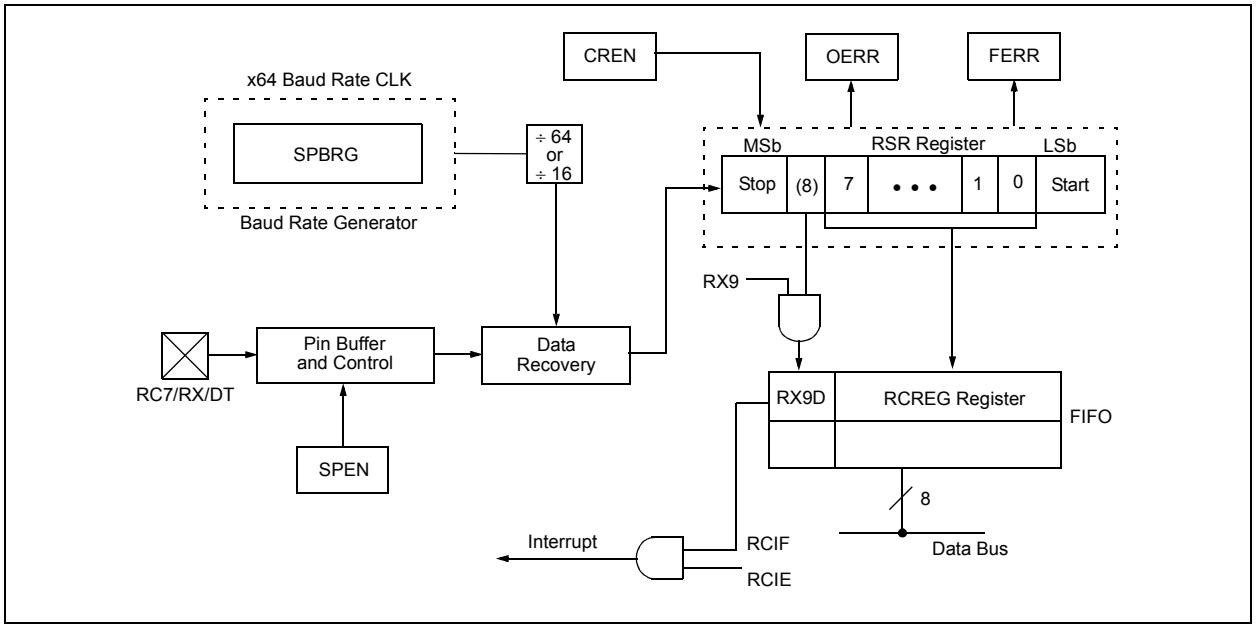

© 2007 Microchip Technology Inc.

To set up an Asynchronous Transmission:

1. Initialize the SPBRG register for the appropriate baud rate. If a high-speed baud rate is desired, set bit BRGH (**Section 18.2 "USART Baud Rate Generator (BRG)"**).
2. Enable the asynchronous serial port by clearing bit, SYNC, and setting bit, SPEN.
3. If interrupts are desired, set enable bit, TXIE.
4. If 9-bit transmission is desired, set Transmit bit, TX9. Can be used as address/data bit.
5. Enable the transmission by setting bit, TXEN, which will also set bit, TXIF.
6. If 9-bit transmission is selected, the ninth bit should be loaded in bit, TX9D.
7. Load data to the TXREG register (starts transmission).
8. If using interrupts, ensure that the GIE and PEIE bits in the INTCON register (INTCON<7:6>) are set.

FIGURE 18-5: ASYNCHRONOUS RECEPTION

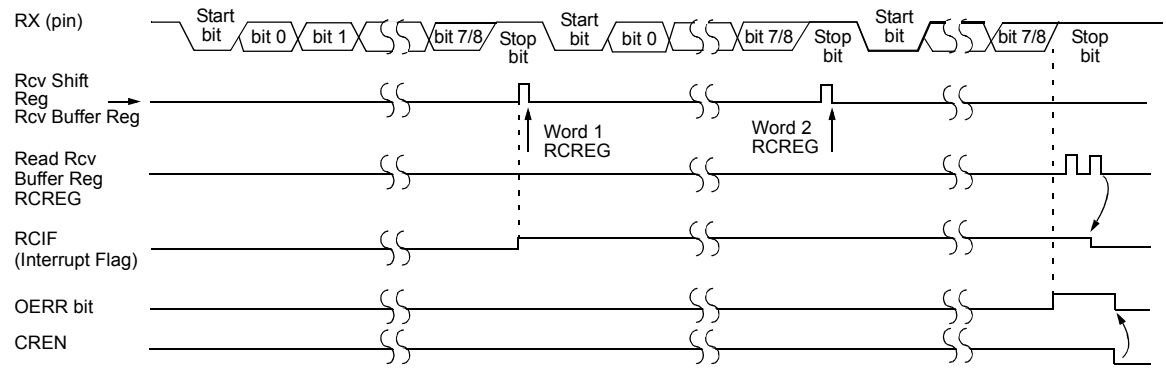

Note: This timing diagram shows three words appearing on the RX input. The RCREG (Receive Buffer) is read after the third word, causing the OERR (Overrun) bit to be set.

TABLE 18-7: REGISTERS ASSOCIATED WITH ASYNCHRONOUS RECEPTION

Name	Bit 7	Bit 6	Bit 5	Bit 4	Bit 3	Bit 2	Bit 1	Bit 0	Value on POR, BOR	Value on all other Resets
INTCON	GIE/GIEH	PEIE/ GIEL	TMR0IE	INT0IE	RBIE	TMR0IF	INT0IF	RBIF	0000 000x	0000 000u
PIR1	PSPIF(1)	ADIF	RCIF	TXIF	SSPIF	CCP1IF	TMR2IF	TMR1IF	0000 0000	0000 0000
PIE1	PSPIE(1)	ADIE	RCIE	TXIE	SSPIE	CCP1IE	TMR2IE	TMR1IE	0000 0000	0000 0000
IPR1	PSPIP(1)	ADIP	RCIP	TXIP	SSPIP	CCP1IP	TMR2IP	TMR1IP	1111 1111	1111 1111
RCSTA	SPEN	RX9	SREN	CREN	ADDEN	FERR	OERR	RX9D	0000 000x	0000 000x
RCREG	USART Receive Register								0000 0000	0000 0000
TXSTA	CSRC	TX9	TXEN	SYNC	—	BRGH	TRMT	TX9D	0000 -010	0000 -010
SPBRG	Baud Rate Generator Register								0000 0000	0000 0000

Legend: x = unknown, - = unimplemented locations read as '0'. Shaded cells are not used for asynchronous reception.

Note 1: The PSPIF, PSPIE and PSPIP bits are reserved on the PIC18F2X20 devices; always maintain these bits clear.

18.4 USART Synchronous Master Mode

In Synchronous Master mode, the data is transmitted in a half-duplex manner (i.e., transmission and reception do not occur at the same time). When transmitting data, the reception is inhibited and vice versa. Synchronous mode is entered by setting bit, SYNC (TXSTA<4>). In addition, enable bit, SPEN (RCSTA<7>), is set in order to configure the RC6/TX/CK and RC7/RX/DT I/O pins to CK (clock) and DT (data) lines, respectively. The Master mode indicates that the processor transmits the master clock on the CK line. The Master mode is entered by setting bit, CSRC (TXSTA<7>).

18.4.1 USART SYNCHRONOUS MASTER TRANSMISSION

The USART transmitter block diagram is shown in Figure 18-1. The heart of the transmitter is the Transmit (Serial) Shift Register (TSR). The shift register obtains its data from the Read/Write Transmit Buffer register, TXREG. The TXREG register is loaded with data in software. The TSR register is not loaded until the last bit has been transmitted from the previous load. As soon as the last bit is transmitted, the TSR is loaded with new data from the TXREG (if available). Once the TXREG register transfers the data to the TSR register (occurs in one TCYCLE), the TXREG is empty and interrupt bit, TXIF (PIR1<4>), is set. The interrupt can be enabled/disabled by setting/clearing enable bit, TXIE (PIE1<4>). Flag bit, TXIF, will be set regardless of the state of enable bit, TXIE, and cannot be cleared in software. It will reset only when new data is loaded into the TXREG register. While flag bit, TXIF, indicates the status of the TXREG register, another bit, TRMT (TXSTA<1>), shows the status of the TSR register. TRMT is a read-only bit which is set when the TSR is empty. No interrupt logic is tied to this bit so the user has to poll this bit in order to determine if the TSR register is empty. The TSR is not mapped in data memory so it is not available to the user.

To set up a Synchronous Master Transmission:

1. Initialize the SPBRG register for the appropriate baud rate (**Section 18.2 "USART Baud Rate Generator (BRG)"**).
2. Enable the synchronous master serial port by setting bits, SYNC, SPEN and CSRC.
3. If interrupts are desired, set enable bit, TXIE.
4. If 9-bit transmission is desired, set bit, TX9.
5. Enable the transmission by setting bit, TXEN.
6. If 9-bit transmission is selected, the ninth bit should be loaded in bit, TX9D.
7. Start transmission by loading data to the TXREG register.
8. If using interrupts, ensure that the GIE and PEIE bits in the INTCON register (INTCON<7:6>) are set.

FIGURE 18-6: SYNCHRONOUS TRANSMISSION

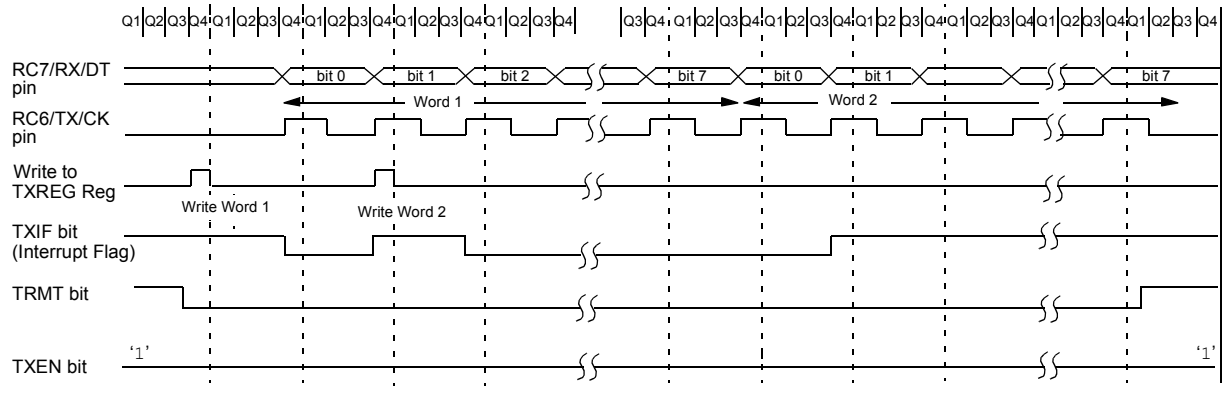

Note: Sync Master mode, SPBRG = 0; continuous transmission of two 8-bit words.

© 2007 Microchip Technology Inc.

FIGURE 18-7: SYNCHRONOUS TRANSMISSION (THROUGH TXEN)

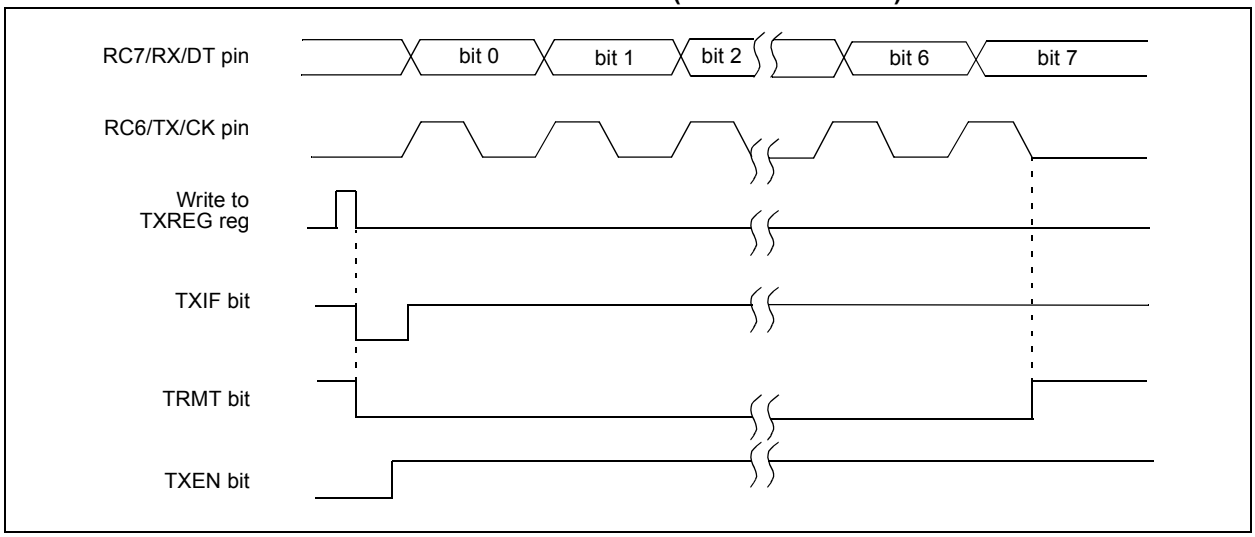

TABLE 18-8: REGISTERS ASSOCIATED WITH SYNCHRONOUS MASTER TRANSMISSION

Name	Bit 7	Bit 6	Bit 5	Bit 4	Bit 3	Bit 2	Bit 1	Bit 0	Value on POR, BOR	Value on all other Resets
INTCON	GIE/ GIEH	PEIE/ GIEL	TMR0IE	INT0IE	RBIE	TMR0IF	INT0IF	RBIF	0000 000x	0000 000u
PIR1	PSPIF(1)	ADIF	RCIF	TXIF	SSPIF	CCP1IF	TMR2IF	TMR1IF	0000 0000	0000 0000
PIE1	PSPIE(1)	ADIE	RCIE	TXIE	SSPIE	CCP1IE	TMR2IE	TMR1IE	0000 0000	0000 0000
IPR1	PSPIP(1)	ADIP	RCIP	TXIP	SSPIP	CCP1IP	TMR2IP	TMR1IP	1111 1111	1111 1111
RCSTA	SPEN	RX9	SREN	CREN	ADDEN	FERR	OERR	RX9D	0000 000x	0000 000x
TXREG	USART Transmit Register								0000 0000	0000 0000
TXSTA	CSRC	TX9	TXEN	SYNC	—	BRGH	TRMT	TX9D	0000 -010	0000 -010
SPBRG	Baud Rate Generator Register								0000 0000	0000 0000

Legend: x = unknown, - = unimplemented, read as '0'. Shaded cells are not used for synchronous master transmission.

Note 1: The PSPIF, PSPIE and PSPIP bits are reserved on the PIC18F2X20 devices; always maintain these bits clear.

18.4.2 USART SYNCHRONOUS MASTER RECEPTION

Once Synchronous mode is selected, reception is enabled by setting either enable bit, SREN (RCSTA<5>), or enable bit, CREN (RCSTA<4>). Data is sampled on the RC7/RX/DT pin on the falling edge of the clock. If enable bit, SREN, is set, only a single word is received. If enable bit, CREN, is set, the reception is continuous until CREN is cleared. If both bits are set, then CREN takes precedence.

To set up a Synchronous Master Reception:

1. Initialize the SPBRG register for the appropriate baud rate (**Section 18.2 "USART Baud Rate Generator (BRG)"**).
2. Enable the synchronous master serial port by setting bits, SYNC, SPEN and CSRC.
3. Ensure bits, CREN and SREN, are clear.
4. If interrupts are desired, set enable bit, RCIE.
5. If 9-bit reception is desired, set bit, RX9.
6. If a single reception is required, set bit, SREN. For continuous reception, set bit, CREN.
7. Interrupt flag bit, RCIF, will be set when reception is complete and an interrupt will be generated if the enable bit, RCIE, was set.
8. Read the RCSTA register to get the ninth bit (if enabled) and determine if any error occurred during reception.
9. Read the 8-bit received data by reading the RCREG register.
10. If any error occurred, clear the error by clearing bit, CREN.
11. If using interrupts, ensure that the GIE and PEIE bits in the INTCON register (INTCON<7:6>) are set.

FIGURE 18-8: SYNCHRONOUS RECEPTION (MASTER MODE, SREN)

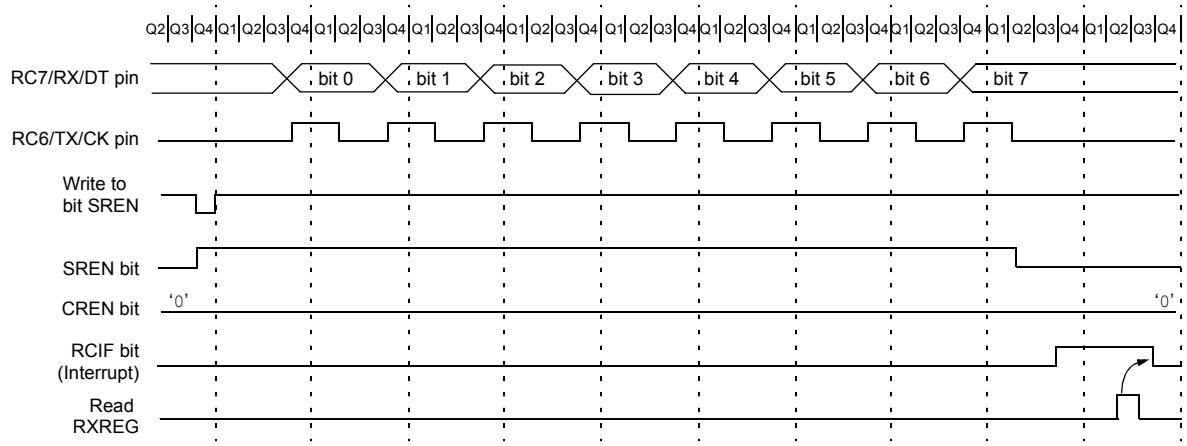

Note: Timing diagram demonstrates Sync Master mode with bit SREN = 1 and bit BRGH = 0.

TABLE 18-9: REGISTERS ASSOCIATED WITH SYNCHRONOUS MASTER RECEPTION

Name	Bit 7	Bit 6	Bit 5	Bit 4	Bit 3	Bit 2	Bit 1	Bit 0	Value on POR, BOR	Value on all other Resets
INTCON	GIE/ GIEH	PEIE/ GIEL	TMR0IE	INT0IE	RBIE	TMR0IF	INT0IF	RBIF	0000 000x	0000 000u
PIR1	PSPIF(1)	ADIF	RCIF	TXIF	SSPIF	CCP1IF	TMR2IF	TMR1IF	0000 0000	0000 0000
PIE1	PSPIE(1)	ADIE	RCIE	TXIE	SSPIE	CCP1IE	TMR2IE	TMR1IE	0000 0000	0000 0000
IPR1	PSPIP(1)	ADIP	RCIP	TXIP	SSPIP	CCP1IP	TMR2IP	TMR1IP	1111 1111	1111 1111
RCSTA	SPEN	RX9	SREN	CREN	ADDEN	FERR	OERR	RX9D	0000 000x	0000 000x
RCREG	USART Receive Register								0000 0000	0000 0000
TXSTA	CSRC	TX9	TXEN	SYNC	—	BRGH	TRMT	TX9D	0000 -010	0000 -010
SPBRG	Baud Rate Generator Register								0000 0000	0000 0000

Legend: x = unknown, - = unimplemented, read as '0'. Shaded cells are not used for synchronous master reception.

Note 1: The PSPIF, PSPIE and PSPIP bits are reserved on the PIC18F2X20 devices; always maintain these bits clear.

© 2007 Microchip Technology Inc.

18.5 USART Synchronous Slave Mode

Synchronous Slave mode differs from the Master mode in the fact that the shift clock is supplied externally at the RC6/TX/CK pin (instead of being supplied internally in Master mode). This allows the device to transfer or receive data while in any power-managed mode. Slave mode is entered by clearing bit, CSRC (TXSTA<7>).

18.5.1 USART SYNCHRONOUS SLAVE TRANSMIT

The operation of the Synchronous Master and Slave modes is identical, except in the case of the Sleep mode.

If two words are written to the TXREG and then the SLEEP instruction is executed, the following will occur:

a) The first word will immediately transfer to the TSR register and transmit.
b) The second word will remain in TXREG register.
c) Flag bit, TXIF, will not be set.
d) When the first word has been shifted out of TSR, the TXREG register will transfer the second word to the TSR and flag bit, TXIF, will now be set.
e) If enable bit, TXIE, is set, the interrupt will wake the chip from Sleep. If the global interrupt is enabled, the program will branch to the interrupt vector.

To set up a Synchronous Slave Transmission:

1. Enable the synchronous slave serial port by setting bits, SYNC and SPEN, and clearing bit, CSRC.
2. Clear bits, CREN and SREN.
3. If interrupts are desired, set enable bit, TXIE.
4. If 9-bit transmission is desired, set bit, TX9.
5. Enable the transmission by setting enable bit, TXEN.
6. If 9-bit transmission is selected, the ninth bit should be loaded in bit TX9D.
7. Start transmission by loading data to the TXREG register.
8. If using interrupts, ensure that the GIE and PEIE bits in the INTCON register (INTCON<7:6>) are set.

TABLE 18-10: REGISTERS ASSOCIATED WITH SYNCHRONOUS SLAVE TRANSMISSION

Name	Bit 7	Bit 6	Bit 5	Bit 4	Bit 3	Bit 2	Bit 1	Bit 0	Value on POR, BOR	Value on all other Resets
INTCON	GIE/ GIEH	PEIE/ GIEL	TMR0IE	INT0IE	RBIE	TMR0IF	INT0IF	RBIF	0000 000x	0000 000u
PIR1	PSPIF(1)	ADIF	RCIF	TXIF	SSPIF	CCP1IF	TMR2IF	TMR1IF	0000 0000	0000 0000
PIE1	PSPIE(1)	ADIE	RCIE	TXIE	SSPIE	CCP1IE	TMR2IE	TMR1IE	0000 0000	0000 0000
IPR1	PSPIP(1)	ADIP	RCIP	TXIP	SSPIP	CCP1IP	TMR2IP	TMR1IP	1111 1111	1111 1111
RCSTA	SPEN	RX9	SREN	CREN	ADDEN	FERR	OERR	RX9D	0000 000x	0000 000x
TXREG	USART Transmit Register								0000 0000	0000 0000
TXSTA	CSRC	TX9	TXEN	SYNC	—	BRGH	TRMT	TX9D	0000 -010	0000 -010
SPBRG	Baud Rate Generator Register								0000 0000	0000 0000

Legend: x = unknown, - = unimplemented, read as '0'. Shaded cells are not used for synchronous slave transmission.

Note 1: The PSPIF, PSPIE and PSPIP bits are reserved on the PIC18F2X20 devices; always maintain these bits clear.

18.5.2 USART SYNCHRONOUS SLAVE RECEPTION

The operation of the Synchronous Master and Slave modes is identical, except in the case of Sleep or any Idle mode and bit, SREN, which is a “don’t care” in Slave mode.

If receive is enabled by setting bit, CREN, prior to entering Sleep or any Idle mode, then a word may be received while in this power-managed mode. Once the word is received, the RSR register will transfer the data to the RCREG register and if enable bit, RCIE, is set, the interrupt generated will wake the chip from the power-managed mode. If the global interrupt is enabled, the program will branch to the interrupt vector.

To set up a Synchronous Slave Reception:

1. Enable the synchronous master serial port by setting bits, SYNC and SPEN, and clearing bit, CSRC.
2. If interrupts are desired, set enable bit, RCIE.
3. If 9-bit reception is desired, set bit, RX9.
4. To enable reception, set enable bit, CREN.
5. Flag bit, RCIF, will be set when reception is complete. An interrupt will be generated if enable bit, RCIE, was set.
6. Read the RCSTA register to get the ninth bit (if enabled) and determine if any error occurred during reception.
7. Read the 8-bit received data by reading the RCREG register.
8. If any error occurred, clear the error by clearing bit, CREN.
9. If using interrupts, ensure that the GIE and PEIE bits in the INTCON register (INTCON<7:6>) are set.

TABLE 18-11: REGISTERS ASSOCIATED WITH SYNCHRONOUS SLAVE RECEPTION

Name	Bit 7	Bit 6	Bit 5	Bit 4	Bit 3	Bit 2	Bit 1	Bit 0	Value on POR, BOR	Value on all other Resets
INTCON	GIE/ GIEH	PEIE/ GIEL	TMR0IE	INT0IE	RBIE	TMR0IF	INT0IF	RBIF	0000 000x	0000 000u
PIR1	PSPIF(1)	ADIF	RCIF	TXIF	SSPIF	CCP1IF	TMR2IF	TMR1IF	0000 0000	0000 0000
PIE1	PSPIE(1)	ADIE	RCIE	TXIE	SSPIE	CCP1IE	TMR2IE	TMR1IE	0000 0000	0000 0000
IPR1	PSPIP(1)	ADIP	RCIP	TXIP	SSPIP	CCP1IP	TMR2IP	TMR1IP	1111 1111	1111 1111
RCSTA	SPEN	RX9	SREN	CREN	ADDEN	FERR	OERR	RX9D	0000 000x	0000 000x
RCREG	USART Receive Register								0000 0000	0000 0000
TXSTA	CSRC	TX9	TXEN	SYNC	—	BRGH	TRMT	TX9D	0000 -010	0000 -010
SPBRG	Baud Rate Generator Register								0000 0000	0000 0000

Legend: x = unknown, - = unimplemented, read as ‘0’. Shaded cells are not used for synchronous slave reception.

Note 1: The PSPIF, PSPIE and PSPIP bits are reserved on the PIC18F2X20 devices; always maintain these bits clear.

© 2007 Microchip Technology Inc.

19.0 10-BIT ANALOG-TO-DIGITAL CONVERTER (A/D) MODULE

The Analog-to-Digital (A/D) converter module has 10 inputs for the PIC18F2X20 devices and 13 for the PIC18F4X20 devices. This module allows conversion of an analog input signal to a corresponding 10-bit digital number.

A new feature for the A/D converter is the addition of programmable acquisition time. This feature allows the user to select a new channel for conversion and setting the GO/DONE bit immediately. When the GO/DONE bit is set, the selected channel is sampled for the programmed acquisition time before a conversion is actually started. This removes the firmware overhead that may have been required to allow for an acquisition (sampling) period (see Register 19-3 and **Section 19.3 "Selecting and Configuring Automatic Acquisition Time"**).

The module has five registers:

- A/D Result High Register (ADRESH)
- A/D Result Low Register (ADRESL)
- A/D Control Register 0 (ADCON0)
- A/D Control Register 1 (ADCON1)
- A/D Control Register 2 (ADCON2)

The ADCON0 register, shown in Register 19-1, controls the operation of the A/D module. The ADCON1 register, shown in Register 19-2, configures the functions of the port pins. The ADCON2 register, shown in Register 19-3, configures the A/D clock source, programmed acquisition time and justification.

REGISTER 19-1: ADCON0: A/D CONTROL REGISTER 0

U-0	U-0	R/W-0	R/W-0	R/W-0	R/W-0	R/W-0	R/W-0
—	—	CHS3	CHS2	CHS1	CHS0	GO/$\overline{\text{DONE}}$	ADON
bit 7							bit 0

Legend:			
R = Readable bit	W = Writable bit	U = Unimplemented bit, read as '0'	
-n = Value at POR	'1' = Bit is set	'0' = Bit is cleared	x = Bit is unknown

bit 7-6 **Unimplemented:** Read as '0'

bit 5-2 **CHS3:CHS0:** Analog Channel Select bits
0000 = Channel 0 (AN0)
0001 = Channel 1 (AN1)
0010 = Channel 2 (AN2)
0011 = Channel 3 (AN3)
0100 = Channel 4 (AN4)
0101 = Channel 5 (AN5)**(1,2)**
0110 = Channel 6 (AN6)**(1,2)**
0111 = Channel 7 (AN7)**(1,2)**
1000 = Channel 8 (AN8)
1001 = Channel 9 (AN9)
1010 = Channel 10 (AN10)
1011 = Channel 11 (AN11)
1100 = Channel 12 (AN12)
1101 = Unimplemented**(2)**
1110 = Unimplemented**(2)**
1111 = Unimplemented**(2)**

bit 1 **GO/$\overline{\text{DONE}}$:** A/D Conversion Status bit
When ADON = 1:
1 = A/D conversion in progress
0 = A/D Idle

bit 0 **ADON:** A/D On bit
1 = A/D converter module is enabled
0 = A/D converter module is disabled

Note 1: These channels are not implemented on the PIC18F2X20 (28-pin) devices.
2: Performing a conversion on unimplemented channels returns full-scale results.

REGISTER 19-2: ADCON1: A/D CONTROL REGISTER 1

U-0	U-0	R/W-0	R/W-0	R/W-0(1)	R/W(1)	R/W(1)	R/W(1)
—	—	VCFG1	VCFG0	PCFG3	PCFG2	PCFG1	PCFG0
bit 7							bit 0

Legend:			
R = Readable bit	W = Writable bit	U = Unimplemented bit, read as '0'	
-n = Value at POR	'1' = Bit is set	'0' = Bit is cleared	x = Bit is unknown

bit 7-6 **Unimplemented:** Read as '0'

bit 5 **VCFG1:** Voltage Reference Configuration bit (V_{REF-} source)
1 = V_{REF-} (AN2)
0 = V_{SS}

bit 4 **VCFG0:** Voltage Reference Configuration bit (V_{REF+} source)
1 = V_{REF+} (AN3)
0 = V_{DD}

bit 3-0 **PCFG3:PCFG0:** A/D Port Configuration Control bits:

PCFG3: PCFG0	AN12	AN11	AN10	AN9	AN8	AN7(2)	AN6(2)	AN5(2)	AN4	AN3	AN2	AN1	AN0
0000(1)	A	A	A	A	A	A	A	A	A	A	A	A	A
0001	A	A	A	A	A	A	A	A	A	A	A	A	A
0010	A	A	A	A	A	A	A	A	A	A	A	A	A
0011	D	A	A	A	A	A	A	A	A	A	A	A	A
0100	D	D	A	A	A	A	A	A	A	A	A	A	A
0101	D	D	D	A	A	A	A	A	A	A	A	A	A
0110	D	D	D	D	A	A	A	A	A	A	A	A	A
0111(1)	D	D	D	D	D	A	A	A	A	A	A	A	A
1000	D	D	D	D	D	D	A	A	A	A	A	A	A
1001	D	D	D	D	D	D	D	A	A	A	A	A	A
1010	D	D	D	D	D	D	D	D	A	A	A	A	A
1011	D	D	D	D	D	D	D	D	D	A	A	A	A
1100	D	D	D	D	D	D	D	D	D	D	A	A	A
1101	D	D	D	D	D	D	D	D	D	D	D	A	A
1110	D	D	D	D	D	D	D	D	D	D	D	D	A
1111	D	D	D	D	D	D	D	D	D	D	D	D	D

A = Analog input D = Digital I/O

Note 1: The POR value of the PCFG bits depends on the value of the PBADEN Configuration bit. When PBADEN = 1, PCFG<3:0> = 0000; when PBADEN = 0, PCFG<3:0> = 0111.

2: AN5 through AN7 are available only in PIC18F4X20 devices.

© 2007 Microchip Technology Inc.

REGISTER 19-3: ADCON2: A/D CONTROL REGISTER 2

R/W-0	U-0	R/W-0	R/W-0	R/W-0	R/W-0	R/W-0	R/W-0
ADFM	—	ACQT2	ACQT1	ACQT0	ADCS2	ADCS1	ADCS0
bit 7							bit 0

Legend:			
R = Readable bit	W = Writable bit	U = Unimplemented bit, read as '0'	
-n = Value at POR	'1' = Bit is set	'0' = Bit is cleared	x = Bit is unknown

bit 7 **ADFM:** A/D Result Format Select bit
1 = Right justified
0 = Left justified

bit 6 **Unimplemented:** Read as '0'

bit 5-3 **ACQT2:ACQT0:** A/D Acquisition Time Select bits
111 = 20 TAD
110 = 16 TAD
101 = 12 TAD
100 = 8 TAD
011 = 6 TAD
010 = 4 TAD
001 = 2 TAD
000 = 0 TAD(1)

bit 2-0 **ADCS2:ADCS0:** A/D Conversion Clock Select bits
111 = FRC (clock derived from A/D RC oscillator)(1)
110 = FOSC/64
101 = FOSC/16
100 = FOSC/4
011 = FRC (clock derived from A/D RC oscillator)(1)
010 = FOSC/32
001 = FOSC/8
000 = FOSC/2

Note 1: If the A/D FRC clock source is selected, a delay of one TCY (instruction cycle) is added before the A/D clock starts. This allows the SLEEP instruction to be executed before starting a conversion.

The analog reference voltage is software selectable to either the device's positive and negative supply voltage (AV_{DD} and AV_{SS}), or the voltage level on the RA3/AN3/V_{REF}+ and RA2/AN2/V_{REF}-/CV_{REF} pins.

The A/D converter has a unique feature of being able to operate while the device is in Sleep mode. To operate in SLEEP, the A/D conversion clock must be derived from the A/D's internal RC oscillator.

The output of the sample and hold is the input into the converter which generates the result via successive approximation.

A device Reset forces all registers to their Reset state. This forces the A/D module to be turned off and any conversion in progress is aborted.

Each port pin associated with the A/D converter can be configured as an analog input or as a digital I/O. The ADRESH and ADRESL registers contain the result of the A/D conversion. When the A/D conversion is complete, the result is loaded into the ADRESH/ADRESL registers, the GO/$\overline{DONE}$ bit (ADCON0 register) is cleared and A/D Interrupt Flag bit, ADIF, is set. The block diagram of the A/D module is shown in Figure 19-1.

FIGURE 19-1: A/D BLOCK DIAGRAM

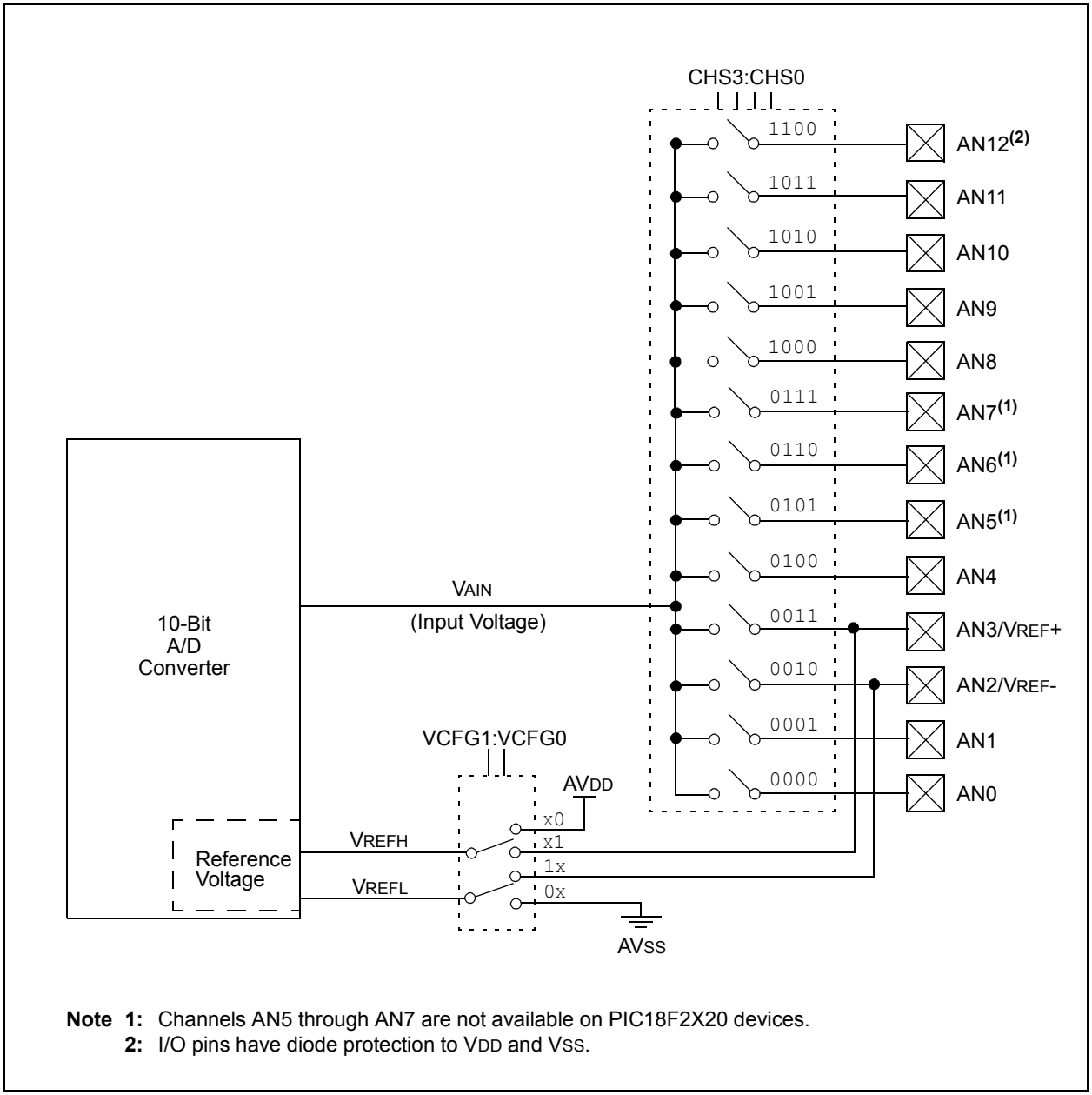

Note 1: Channels AN5 through AN7 are not available on PIC18F2X20 devices.
2: I/O pins have diode protection to V_{DD} and V_{SS}.

© 2007 Microchip Technology Inc.

The value in the ADRESH/ADRESL registers is not modified for a Power-on Reset. The ADRESH/ADRESL registers will contain unknown data after a Power-on Reset.

After the A/D module has been configured as desired, the selected channel must be acquired before the conversion is started. The analog input channels must have their corresponding TRIS bits selected as an input. To determine acquisition time, see **Section 19.1 "A/D Acquisition Requirements"**. After this acquisition time has elapsed, the A/D conversion can be started. An acquisition time can be programmed to occur between setting the GO/$\overline{\text{DONE}}$ bit and the actual start of the conversion.

The following steps should be followed to do an A/D conversion:

1. Configure the A/D module:
   - Configure analog pins, voltage reference and digital I/O (ADCON1)
   - Select A/D input channel (ADCON0)
   - Select A/D acquisition time (ADCON2)
   - Select A/D conversion clock (ADCON2)
   - Turn on A/D module (ADCON0)
2. Configure A/D interrupt (if desired):
   - Clear ADIF bit
   - Set ADIE bit
   - Set GIE bit
3. Wait the required acquisition time (if required).
4. Start conversion:
   - Set GO/$\overline{\text{DONE}}$ bit (ADCON0 register)
5. Wait for A/D conversion to complete, by either:
   - Polling for the GO/$\overline{\text{DONE}}$ bit to be cleared

   OR
   - Waiting for the A/D interrupt
6. Read A/D Result registers (ADRESH:ADRESL); clear bit ADIF if required.
7. For next conversion, go to step 1 or step 2, as required. The A/D conversion time per bit is defined as TAD. A minimum wait of 2 TAD is required before next acquisition starts.

FIGURE 19-2: ANALOG INPUT MODEL

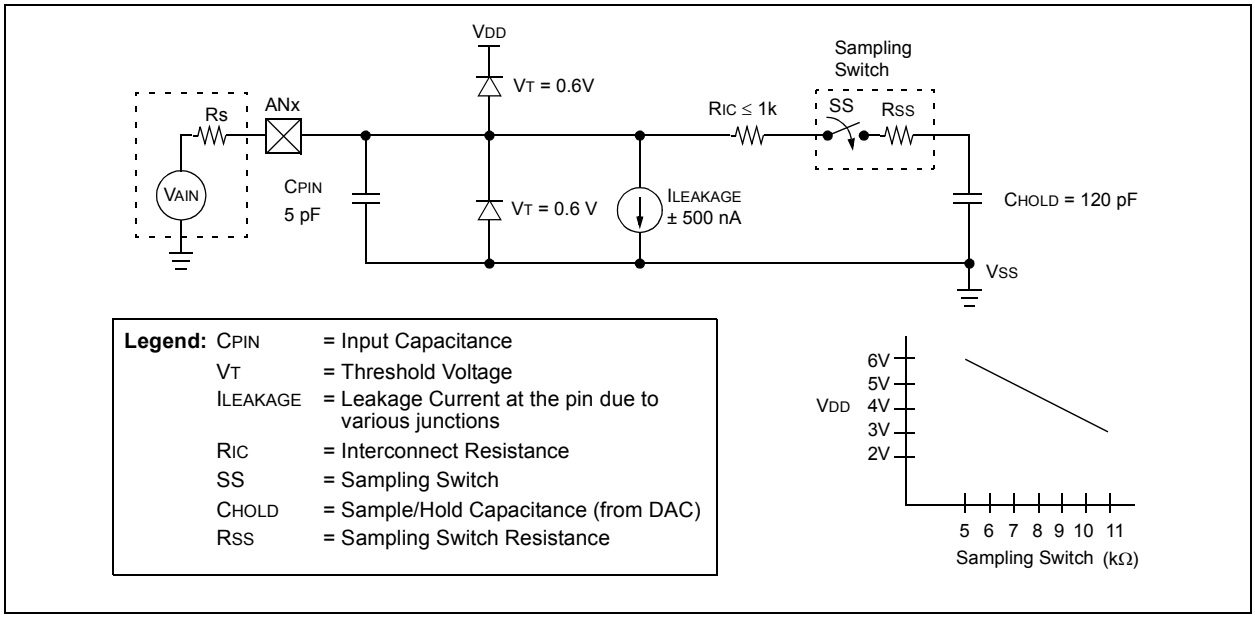

19.1 A/D Acquisition Requirements

For the A/D converter to meet its specified accuracy, the Charge Holding Capacitor (CHOLD) must be allowed to fully charge to the input channel voltage level. The analog input model is shown in Figure 19-2. The source impedance (RS) and the internal sampling switch (RSS) impedance directly affect the time required to charge the capacitor CHOLD. The sampling switch (RSS) impedance varies over the device voltage (VDD). The source impedance affects the offset voltage at the analog input (due to pin leakage current). **The maximum recommended impedance for analog sources is 2.5 kΩ.** After the analog input channel is selected (changed), the channel must be sampled for at least the minimum acquisition time before starting a conversion.

Note:	When the conversion is started, the holding capacitor is disconnected from the input pin.

To calculate the minimum acquisition time, Equation 19-1 may be used. This equation assumes that 1/2 LSb error is used (1024 steps for the A/D). The 1/2 LSb error is the maximum error allowed for the A/D to meet its specified resolution.

Example 19-1 shows the calculation of the minimum required acquisition time TACQ. This calculation is based on the following application system assumptions:

CHOLD	=	120 pF
RS	=	2.5 kΩ
Conversion Error	≤	1/2 LSb
VDD	=	5V → Rss = 7 kΩ
Temperature	=	50°C (system max.)
VHOLD	=	0V @ time = 0

19.2 A/D VREF+ and VREF- References

If external voltage references are used instead of the internal AVDD and AVSS sources, the source impedance of the VREF+ and VREF- voltage sources must be considered. During acquisition, currents supplied by these sources are insignificant. However, during conversion, the A/D module sinks and sources current through the reference sources.

In order to maintain the A/D accuracy, the voltage reference source impedances should be kept low to reduce voltage changes. These voltage changes occur as reference currents flow through the reference source impedance. **The maximum recommended impedance of the VREF+ and VREF- external reference voltage sources is 75Ω.**

Note:	When using external references, the source impedance of the external voltage references must be less than 75Ω in order to achieve the specified ADC resolution. A higher reference source impedance will increase the ADC offset and gain errors. Resistive voltage dividers will not provide a low enough source impedance. To ensure the best possible ADC performance, external VREF inputs should be buffered with an op amp or other low-impedance circuit.

EQUATION 19-1: ACQUISITION TIME

$$T_{ACQ} = \text{Amplifier Settling Time} + \text{Holding Capacitor Charging Time} + \text{Temperature Coefficient}$$
$$= T_{AMP} + T_C + T_{COFF}$$

EQUATION 19-2: MINIMUM A/D HOLDING CAPACITOR

$$V_{HOLD} = (V_{REF} - (V_{REF}/2048)) \cdot (1 - e^{(-Tc/C_{HOLD}(R_{IC} + R_{SS} + R_S))})$$

or

$$T_C = -(C_{HOLD})(R_{IC} + R_{SS} + R_S) \ln(1/2048)$$

EXAMPLE 19-1: CALCULATING THE MINIMUM REQUIRED ACQUISITION TIME

$T_{ACQ} = T_{AMP} + T_C + T_{COFF}$

$T_{AMP} = 5\ \mu s$

$T_{COFF} = (\text{Temp} - 25°C)(0.05\ \mu s/°C)$
$(50°C - 25°C)(0.05\ \mu s/°C)$
$1.25\ \mu s$

Temperature coefficient is only required for temperatures > 25°C. Below 25°C, $T_{COFF} = 0\ \mu s$.

$T_C = -(C_{HOLD})(R_{IC} + R_{SS} + R_S) \ln(1/2047)\ \mu s$
$-(120\ pF)(1\ k\Omega + 7\ k\Omega + 2.5\ k\Omega) \ln(0.0004883)\ \mu s$
$9.61\ \mu s$

$T_{ACQ} = 5\ \mu s + 1.25\ \mu s + 9.61\ \mu s$
$12.86\ \mu s$

© 2007 Microchip Technology Inc.

19.3 Selecting and Configuring Automatic Acquisition Time

The ADCON2 register allows the user to select an acquisition time that occurs each time the GO/DONE bit is set.

When the GO/DONE bit is set, sampling is stopped and a conversion begins. The user is responsible for ensuring the required acquisition time has passed between selecting the desired input channel and setting the GO/DONE bit. This occurs when the ACQT2:ACQT0 bits (ADCON2<5:3>) remain in their Reset state ('000') and is compatible with devices that do not offer programmable acquisition times.

If desired, the ACQT bits can be set to select a programmable acquisition time for the A/D module. When the GO/DONE bit is set, the A/D module continues to sample the input for the selected acquisition time, then automatically begins a conversion. Since the acquisition time is programmed, there may be no need to wait for an acquisition time between selecting a channel and setting the GO/DONE bit.

In either case, when the conversion is completed, the GO/DONE bit is cleared, the ADIF flag is set and the A/D begins sampling the currently selected channel again. If an acquisition time is programmed, there is nothing to indicate if the acquisition time has ended or if the conversion has begun.

19.4 Selecting the A/D Conversion Clock

The A/D conversion time per bit is defined as TAD. The A/D conversion requires 11 TAD per 10-bit conversion. The source of the A/D conversion clock is software selectable. There are seven possible options for TAD:

- 2 TOSC
- 4 TOSC
- 8 TOSC
- 16 TOSC
- 32 TOSC
- 64 TOSC
- Internal RC Oscillator

For correct A/D conversions, the A/D conversion clock (TAD) must be as short as possible, but greater than the minimum TAD (approximately 2 μs, see parameter #130 for more information).

Table 19-1 shows the resultant TAD times derived from the device operating frequencies and the A/D clock source selected.

TABLE 19-1: TAD vs. DEVICE OPERATING FREQUENCIES

AD Clock Source (TAD)		Maximum Device Frequency	
Operation	**ADCS2:ADCS0**	**PIC18FXX20**	**PIC18LFXX20(4)**
2 TOSC	000	1.25 MHz	666 kHz
4 TOSC	100	2.50 MHz	1.33 MHz
8 TOSC	001	5.00 MHz	2.66 MHz
16 TOSC	101	10.0 MHz	5.33 MHz
32 TOSC	010	20.0 MHz	10.65 MHz
64 TOSC	110	40.0 MHz	21.33 MHz
RC(3)	x11	1.00 MHz(1)	1.00 MHz(2)

Note 1: The RC source has a typical TAD time of 4 μs.

2: The RC source has a typical TAD time of 6 μs.

3: For device frequencies above 1 MHz, the device must be in Sleep for the entire conversion or the A/D accuracy may be out of specification.

4: Low-power devices only.

19.5 Operation in Power-Managed Modes

The selection of the automatic acquisition time and A/D conversion clock is determined in part by the clock source and frequency while in a power-managed mode.

If the A/D is expected to operate while the device is in a power-managed mode, the ACQT2:ACQT0 and ADCS2:ADCS0 bits in ADCON2 should be updated in accordance with the power-managed mode clock that will be used. After the power-managed mode is entered (either of the power-managed Run modes), an A/D acquisition or conversion may be started. Once an acquisition or conversion is started, the device should continue to be clocked by the same power-managed mode clock source until the conversion has been completed. If desired, the device may be placed into the corresponding power-managed Idle mode during the conversion.

If the power-managed mode clock frequency is less than 1 MHz, the A/D RC clock source should be selected.

Operation in Sleep mode requires the A/D RC clock to be selected. If bits ACQT2:ACQT0 are set to '000' and a conversion is started, the conversion will be delayed one instruction cycle to allow execution of the SLEEP instruction and entry to Sleep mode. The IDLEN and SCS bits in the OSCCON register must have already been cleared prior to starting the conversion.

19.6 Configuring Analog Port Pins

The ADCON1, TRISA, TRISB and TRISE registers all configure the A/D port pins. The port pins needed as analog inputs must have their corresponding TRIS bits set (input). If the TRIS bit is cleared (output), the digital output level (V_{OH} or V_{OL}) will be converted.

The A/D operation is independent of the state of the CHS3:CHS0 bits and the TRIS bits.

Note 1: When reading the PORT register, all pins configured as analog input channels will read as cleared (a low level). Pins configured as digital inputs will convert an analog input. Analog levels on a digitally configured input will be accurately converted.

2: Analog levels on any pin defined as a digital input may cause the digital input buffer to consume current out of the device's specification limits.

3: The PBADEN bit in the Configuration register configures PORTB pins to reset as analog or digital pins by controlling how the PCFG0 bits in ADCON1 are reset.

© 2007 Microchip Technology Inc.

19.7 A/D Conversions

Figure 19-3 shows the operation of the A/D converter after the GO/$\overline{\text{DONE}}$ bit has been set and the ACQT2:ACQT0 bits are cleared. A conversion is started after the following instruction to allow entry into Sleep mode before the conversion begins.

Figure 19-4 shows the operation of the A/D converter after the GO/$\overline{\text{DONE}}$ bit has been set and the ACQT2:ACQT0 bits are set to '010' and selecting a 4 TAD acquisition time before the conversion starts.

Clearing the GO/$\overline{\text{DONE}}$ bit during a conversion will abort the current conversion. The A/D Result register pair will NOT be updated with the partially completed A/D conversion sample. This means the ADRESH:ADRESL registers will continue to contain the value of the last completed conversion (or the last value written to the ADRESH:ADRESL registers).

After the A/D conversion is completed or aborted, a 2 TAD wait is required before the next acquisition can be started. After this wait, acquisition on the selected channel is automatically started.

Note:	The GO/$\overline{\text{DONE}}$ bit should **NOT** be set in the same instruction that turns on the A/D.

FIGURE 19-3: A/D CONVERSION TAD CYCLES (ACQT<2:0> = 000, TACQ = 0)

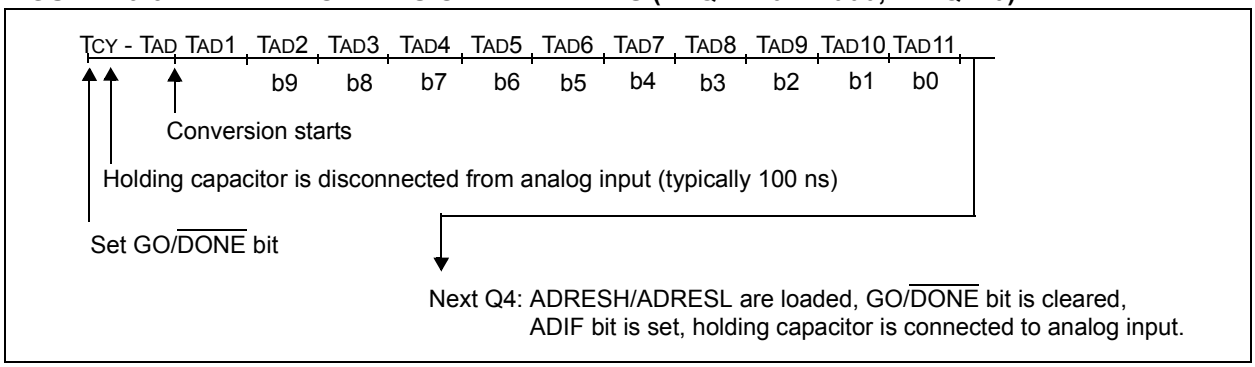

FIGURE 19-4: A/D CONVERSION TAD CYCLES (ACQT<2:0> = 010, TACQ = 4 TAD)

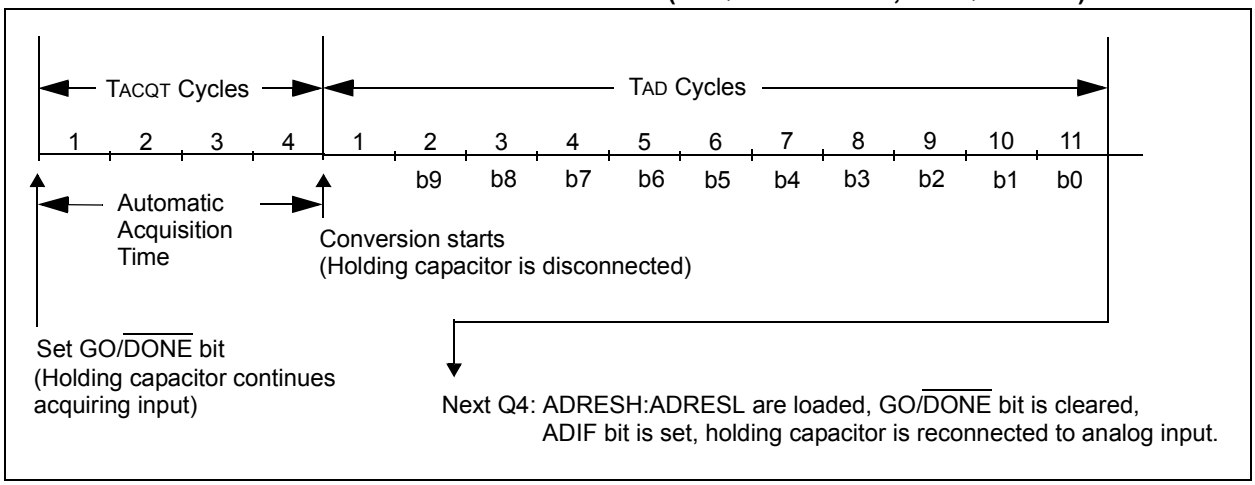

19.8 Use of the CCP2 Trigger

An A/D conversion can be started by the "Special Event Trigger" of the CCP2 module. This requires that the CCP2M3:CCP2M0 bits (CCP2CON<3:0>) be programmed as '1011' and that the A/D module is enabled (ADON bit is set). When the trigger occurs, the GO/DONE bit will be set, starting the A/D acquisition and conversion and the Timer1 (or Timer3) counter will be reset to zero. Timer1 (or Timer3) is reset to automatically repeat the A/D acquisition period with minimal software overhead (moving ADRESH/ADRESL to the desired location). The appropriate analog input channel must be selected and the minimum acquisition period is either timed by the user or an appropriate TACQ time, selected before the "Special Event Trigger", sets the GO/DONE bit (starts a conversion).

If the A/D module is not enabled (ADON is cleared), the "Special Event Trigger" will be ignored by the A/D module but will still reset the Timer1 (or Timer3) counter.

TABLE 19-2: SUMMARY OF A/D REGISTERS

Name	Bit 7	Bit 6	Bit 5	Bit 4	Bit 3	Bit 2	Bit 1	Bit 0	Value on POR, BOR	Value on all other Resets
INTCON	GIE/GIEH	PEIE/GIEL	TMR0IE	INT0IE	RBIE	TMR0IF	INT0IF	RBIF	0000 0000	0000 0000
PIR1	PSPIF	ADIF	RCIF	TXIF	SSPIF	CCP1IF	TMR2IF	TMR1IF	0000 0000	0000 0000
PIE1	PSPIE	ADIE	RCIE	TXIE	SSPIE	CCP1IE	TMR2IE	TMR1IE	0000 0000	0000 0000
IPR1	PSPIP	ADIP	RCIP	TXIP	SSPIP	CCP1IP	TMR2IP	TMR1IP	1111 1111	1111 1111
PIR2	OSCFIF	CMIF	—	EEIF	BCLIF	LVDIF	TMR3IF	CCP2IF	00-0 0000	00-0 0000
PIE2	OSCFIE	CMIE	—	EEIE	BCLIE	LVDIE	TMR3IE	CCP2IE	00-0 0000	00-0 0000
IPR2	OSCFIP	CMIP	—	EEIP	BCLIP	LVDIP	TMR3IP	CCP2IP	11-1 1111	11-1 1111
ADRESH	A/D Result Register High Byte								xxxx xxxx	uuuu uuuu
ADRESL	A/D Result Register Low Byte								xxxx xxxx	uuuu uuuu
ADCON0	—	—	CHS3	CHS3	CHS1	CHS0	GO/DONE	ADON	--00 0000	--00 0000
ADCON1	—	—	VCFG1	VCFG0	PCFG3	PCFG2	PCFG1	PCFG0	--00 0qqq	--00 0qqq
ADCON2	ADFM	—	ACQT2	ACQT1	ACQT0	ADCS2	ADCS1	ADCS0	0-00 0000	0-00 0000
PORTA	RA7(4)	RA6(4)	RA5	RA4	RA3	RA2	RA1	RA0	--0x 0000	--0u 0000
TRISA	TRISA7(4)	TRISA6(4)							--11 1111	--11 1111
PORTB	Read PORTB pins, Write LATB Latch								xxxx xxxx	uuuu uuuu
TRISB	PORTB Data Direction Register								1111 1111	1111 1111
LATB	PORTB Output Data Latch								xxxx xxxx	uuuu uuuu
PORTE(2)	—	—	—	—	RE3(1)	Read PORTE pins, Write LATE(4)			---- xxxx	---- uuuu
TRISE(2)	IBF	OBE	IBOV	PSPMODE	—	PORTE Data Direction			0000 -111	0000 -111
LATE(2)	—	—	—	—	PORTE Output Data Latch				---- -xxx	---- -uuu

Legend: x = unknown, u = unchanged, - = unimplemented, read as '0', q = value depends on condition.
Shaded cells are not used for A/D conversion.

Note 1: The RE3 port bit is available as an input-only pin only in 40-pin devices and when Master Clear functionality is disabled (CONFIG3H<7>=0).

2: This register is not implemented on PIC18F2X20 devices and reads back 0x00.

3: These pins may be configured as port pins depending on the oscillator mode selected.

© 2007 Microchip Technology Inc.

20.0 COMPARATOR MODULE

The comparator module contains two analog comparators. The inputs and outputs for the comparators are multiplexed with the RA0 through RA5 pins. The on-chip voltage reference (**Section 21.0 "Comparator Voltage Reference Module"**) can also be an input to the comparators.

The CMCON register, shown as Register 20-1, controls the comparator module's input and output multiplexers. A block diagram of the various comparator configurations is shown in Figure 20-1.

20.1 Comparator Configuration

There are eight modes of operation for the comparators. The CM bits (CMCON<2:0>) are used to select these modes. Figure 20-1 shows the eight possible modes. The TRISA register controls the data direction of the comparator pins for each mode. If the Comparator mode is changed, the comparator output level may not be valid for the specified mode change delay shown in the Electrical Specifications (see **Section 26.0 "Electrical Characteristics"**).

Note:	Comparator interrupts should be disabled during a Comparator mode change. Otherwise, a false interrupt may occur.

REGISTER 20-1: CMCON: COMPARATOR CONTROL REGISTER

R-0	R-0	R/W-0	R/W-0	R/W-0	R/W-1	R/W-1	R/W-1
C2OUT	C1OUT	C2INV	C1INV	CIS	CM2	CM1	CM0
bit 7							bit 0

Legend:			
R = Readable bit	W = Writable bit	U = Unimplemented bit, read as '0'	
-n = Value at POR	'1' = Bit is set	'0' = Bit is cleared	x = Bit is unknown

bit 7 **C2OUT**: Comparator 2 Output bit
When C2INV = 0:
1 = C2 VIN+ > C2 VIN-
0 = C2 VIN+ < C2 VIN-
When C2INV = 1:
1 = C2 VIN+ < C2 VIN-
0 = C2 VIN+ > C2 VIN-

bit 6 **C1OUT**: Comparator 1 Output bit
When C1INV = 0:
1 = C1 VIN+ > C1 VIN-
0 = C1 VIN+ < C1 VIN-
When C1INV = 1:
1 = C1 VIN+ < C1 VIN-
0 = C1 VIN+ > C1 VIN-

bit 5 **C2INV**: Comparator 2 Output Inversion bit
1 = C2 output inverted
0 = C2 output not inverted

bit 4 **C1INV**: Comparator 1 Output Inversion bit
1 = C1 output inverted
0 = C1 output not inverted

bit 3 **CIS**: Comparator Input Switch bit
When CM2:CM0 = 110:
1 = C1 VIN- connects to RA3/AN3
C2 VIN- connects to RA2/AN2
0 = C1 VIN- connects to RA0/AN0
C2 VIN- connects to RA1/AN1

bit 2-0 **CM2:CM0**: Comparator Mode bits
Figure 20-1 shows the Comparator modes and the CM2:CM0 bit settings.

FIGURE 20-1: COMPARATOR I/O OPERATING MODES

Comparators RESET
CM<2:0> = 000

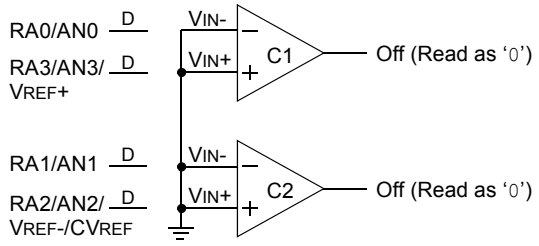

Comparators Off (POR Default Value)
CM<2:0> = 111

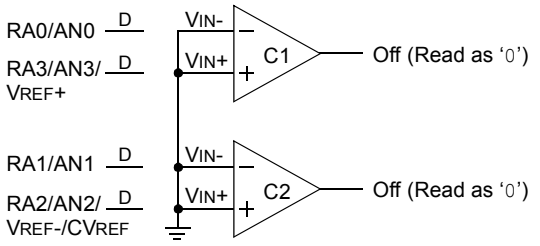

Two Independent Comparators
CM<2:0> = 010

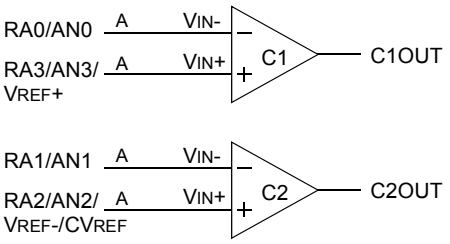

Two Independent Comparators with Outputs
CM<2:0> = 011

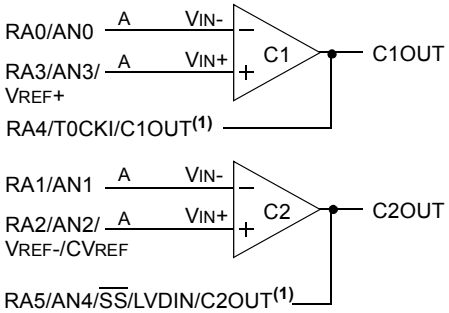

Two Common Reference Comparators
CM<2:0> = 100

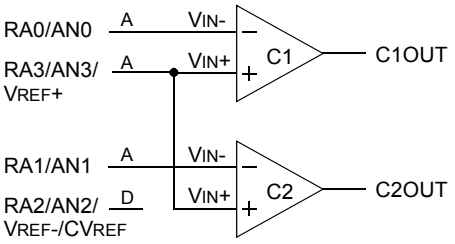

Two Common Reference Comparators with Outputs
CM<2:0> = 101

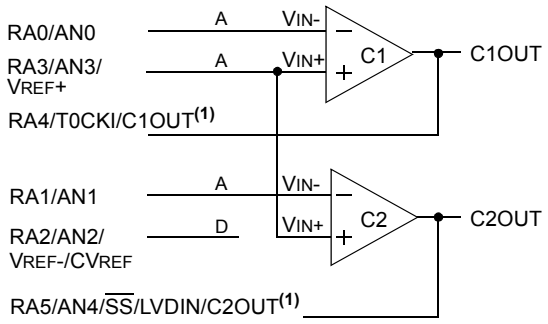

One Independent Comparator with Output
CM<2:0> = 001

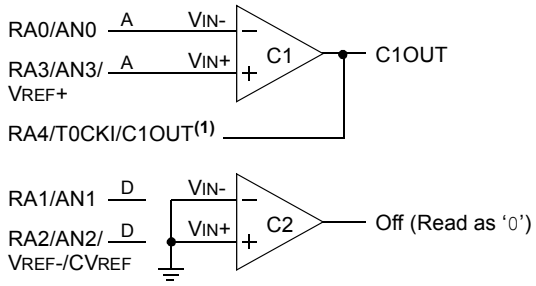

Four Inputs Multiplexed to Two Comparators
CM<2:0> = 110

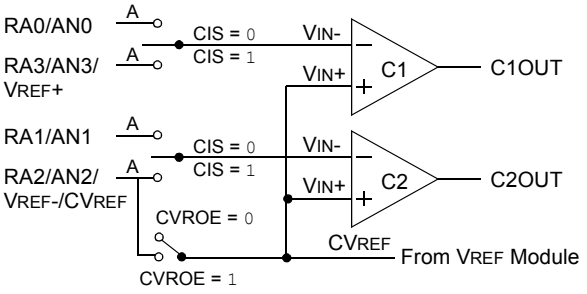

A = Analog Input, port reads zeros always, overrides TRISA bit(2).
D = Digital Input.
CIS (CMCON<3>) is the Comparator Input Switch; CVROE (CVRCON<6>) is the Voltage Reference Output Switch.

Note 1: RA4 must be configured as an output pin in TRISA<4> when used to output C1OUT. RA5 ignores TRISA<5> when used as an output for C2OUT.

2: Mode 110 is exception. Comparator input pins obey TRISA bits.

© 2007 Microchip Technology Inc.

20.2 Comparator Operation

A single comparator is shown in Figure 20-2, along with the relationship between the analog input levels and the digital output. When the analog input at VIN+ is less than the analog input VIN-, the output of the comparator is a digital low level. When the analog input at VIN+ is greater than the analog input VIN-, the output of the comparator is a digital high level. The shaded areas of the output of the comparator in Figure 20-2 represent the uncertainty due to input offsets and response time.

20.3 Comparator Reference

An external or internal reference signal may be used depending on the comparator operating mode. The analog signal present at VIN- is compared to the signal at VIN+ and the digital output of the comparator is adjusted accordingly (Figure 20-2).

FIGURE 20-2: SINGLE COMPARATOR

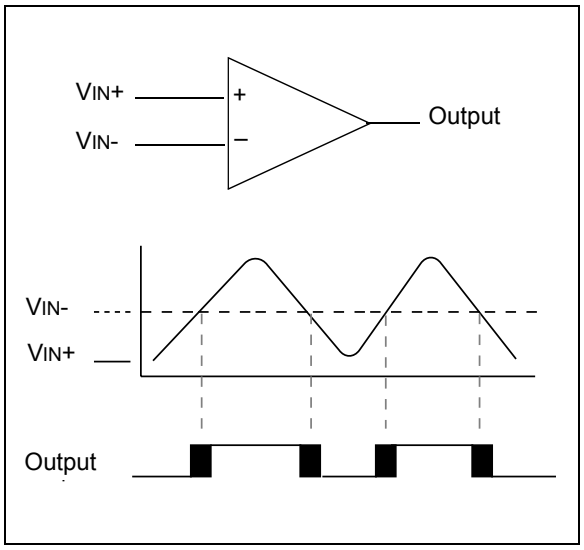

20.3.1 EXTERNAL REFERENCE SIGNAL

When external voltage references are used, the comparator module can be configured to have the comparators operate from the same or different reference sources. However, threshold detector applications may require the same reference. The reference signal must be between VSS and VDD and can be applied to either pin of the comparator(s).

20.3.2 INTERNAL REFERENCE SIGNAL

The comparator module also allows the selection of an internally generated voltage reference for the comparators. **Section 21.0 "Comparator Voltage Reference Module"** contains a detailed description of the comparator voltage reference module that provides this signal. The internal reference signal is used when comparators are in mode, CM2:CM0 = 110 (Figure 20-1). In this mode, the internal voltage reference is applied to the VIN+ pin of both comparators.

Depending on the setting of the CVROE bit (CVRCON<6>), the voltage reference may also be available on pin RA2.

20.4 Comparator Response Time

Response time is the minimum time, after selecting a new reference voltage or input source, before the comparator output has a valid level. If the internal reference is changed, the maximum delay of the internal voltage reference must be considered when using the comparator outputs. Otherwise, the maximum delay of the comparators should be used (see Table 26-2 in **Section 26.0 "Electrical Characteristics"**).

20.5 Comparator Outputs

The comparator outputs are read through the CMCON register. These bits are read-only. The comparator outputs may also be directly output to the RA4 and RA5 I/O pins. When enabled, multiplexers in the output path of the RA4 and RA5 pins will switch and the output of each pin will be the unsynchronized output of the comparator. The uncertainty of each of the comparators is related to the input offset voltage and the response time given in the specifications. Figure 20-3 shows the comparator output block diagram.

The TRISA bits will still function as an output enable/ disable for the RA4 and RA5 pins while in this mode.

The polarity of the comparator outputs can be changed using the C2INV and C1INV bits (CMCON<4:5>).

Note 1:	When reading the PORT register, all pins configured as analog inputs will read as a '0'. Pins configured as digital inputs will convert an analog input according to the Schmitt Trigger input specification.
2:	Analog levels on any pin defined as a digital input may cause the input buffer to consume more current than is specified.

FIGURE 20-3: COMPARATOR OUTPUT BLOCK DIAGRAM

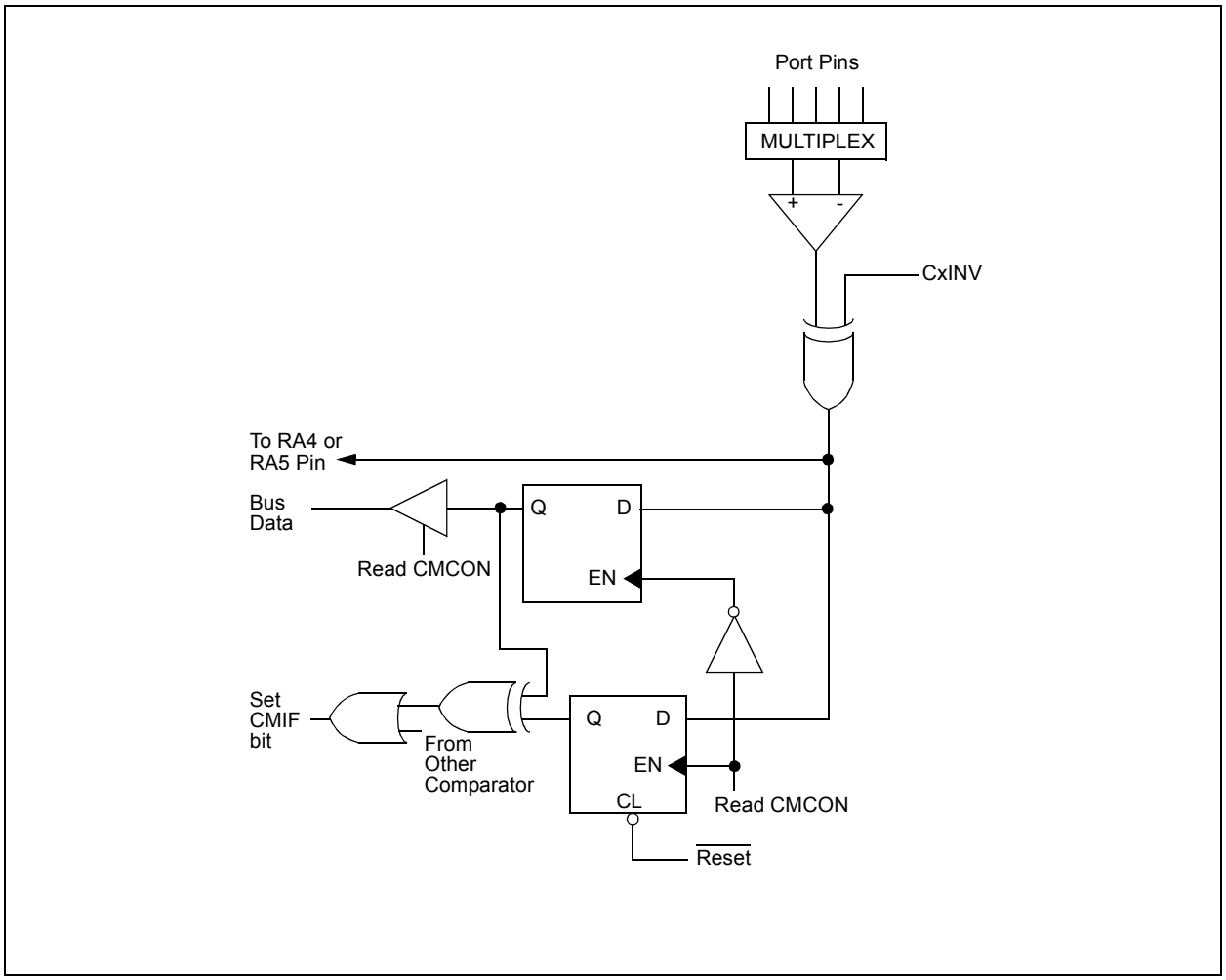

20.6 Comparator Interrupts

The comparator interrupt flag is set whenever there is a change in the output value of either comparator. Software will need to maintain information about the status of the output bits, as read from CMCON<7:6>, to determine the actual change that occurred. The CMIF bit (PIR registers) is the Comparator Interrupt Flag. The CMIF bit is cleared by firmware. Since it is also possible to write a '1' to this register, a simulated interrupt may be initiated.

The CMIE bit (PIE registers) and the PEIE bit (INTCON register) must be set to enable the interrupt. In addition, the GIE bit must also be set. If any of these bits are clear, the interrupt is not enabled, though the CMIF bit will still be set if an interrupt condition occurs.

Note:	If a change in the CMCON register (C1OUT or C2OUT) should occur when a read operation is being executed (start of the Q2 cycle), then the CMIF (PIR registers) interrupt flag may not get set.

The user, in the Interrupt Service Routine, can clear the interrupt in the following manner:

a) Any read or write of CMCON will end the mismatch condition.

b) Clear flag bit CMIF.

A mismatch condition will continue to set flag bit CMIF. Reading CMCON will end the mismatch condition and allow flag bit CMIF to be cleared.

© 2007 Microchip Technology Inc.

20.7 Comparator Operation in Power-Managed Modes

When a comparator is active and the device is placed in a power-managed mode, the comparator remains active and the interrupt is functional if enabled. This interrupt will wake-up the device from a power-managed mode when enabled. Each operational comparator will consume additional current, as shown in the comparator specifications. To minimize power consumption while in a power-managed mode, turn off the comparators (CM<2:0> = 111) before entering the power-managed modes. If the device wakes up from a power-managed mode, the contents of the CMCON register are not affected.

20.8 Effects of a Reset

A device Reset forces the CMCON register to its Reset state, causing the comparator module to be in the Comparator Reset mode (CM<2:0> = 111). This ensures that all potential inputs are analog inputs. Device current is minimized when digital inputs are present at Reset time. The comparators will be powered down during the Reset interval.

20.9 Analog Input Connection Considerations

A simplified circuit for an analog input is shown in Figure 20-4. Since the analog pins are connected to a digital output, they have reverse biased diodes to VDD and VSS. Therefore, the analog input must be between VSS and VDD. If the input voltage exceeds this range by more than 0.6V, one of the diodes is forward biased and a latch-up condition may occur. A maximum source impedance of 10 kΩ is recommended for the analog sources.

FIGURE 20-4: COMPARATOR ANALOG INPUT MODEL

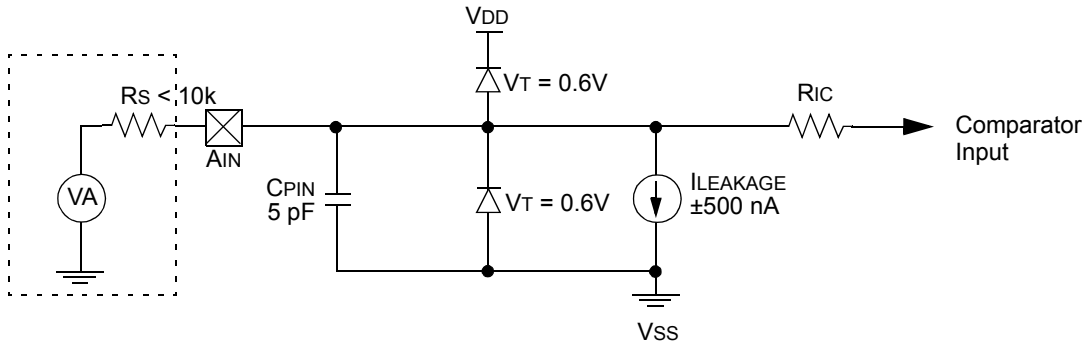

Legend:
CPIN = Input Capacitance
VT = Threshold Voltage
ILEAKAGE = Leakage Current at the pin due to various junctions
RIC = Interconnect Resistance
RS = Source Impedance
VA = Analog Voltage

TABLE 20-1: REGISTERS ASSOCIATED WITH COMPARATOR MODULE

Name	Bit 7	Bit 6	Bit 5	Bit 4	Bit 3	Bit 2	Bit 1	Bit 0	Value on POR	Value on all other Resets
CMCON	C2OUT	C1OUT	C2INV	C1INV	CIS	CM2	CM1	CM0	0000 0111	0000 0111
CVRCON	CVREN	CVROE	CVRR	—	CVR3	CVR2	CVR1	CVR0	000- 0000	000- 0000
INTCON	GIE/ GIEH	PEIE/ GIEL	TMR0IE	INT0IE	RBIE	TMR0IF	INT0IF	RBIF	0000 0000	0000 0000
PIR2	OSCFIF	CMIF	—	EEIF	BCLIF	LVDIF	TMR3IF	CCP2IF	00-0 0000	00-0 0000
PIE2	OSCFIE	CMIE	—	EEIE	BCLIE	LVDIE	TMR3IE	CCP2IE	00-0 0000	00-0 0000
IPR2	OSCFIP	CMIP	—	EEIP	BCLIP	LVDIP	TMR3IP	CCP2IP	11-1 1111	11-1 1111
PORTA	RA7(1)	RA6(1)	RA5	RA4	RA3	RA2	RA1	RA0	xx0x 0000	xx0x 0000
LATA	LATA7(1)	LATA6(1)	Data Output Register						xxxx xxxx	xxxx xxxx
TRISA	TRISA7(1)	TRISA6(1)	Data Direction Register						1111 1111	1111 1111

Legend: x = unknown, u = unchanged, - = unimplemented, read as '0'.
Shaded cells are unused by the comparator module.

Note 1: These pins are enabled based on oscillator configuration (see Configuration Register 1H).

© 2007 Microchip Technology Inc.

21.0 COMPARATOR VOLTAGE REFERENCE MODULE

The comparator voltage reference is a 16-tap resistor ladder network that provides a selectable voltage reference. The resistor ladder is segmented to provide two ranges of CVREF values and has a power-down function to conserve power when the reference is not being used. The CVRCON register controls the operation of the reference as shown in Register 21-1. The block diagram is given in Figure 21-1.

The comparator reference supply voltage comes from VDD and VSS.

21.1 Configuring the Comparator Voltage Reference

The comparator voltage reference can output 16 distinct voltage levels for each range. The equations used to calculate the output of the comparator voltage reference are as follows:

EQUATION 21-1:

$$\text{If CVRR} = 1: \quad CV_{REF} = (CVR\langle 3:0\rangle) \bullet \frac{V_{DD}}{24}$$

$$\text{If CVRR} = 0: \quad CV_{REF} = (CVR\langle 3:0\rangle + 8) \bullet \frac{V_{DD}}{32}$$

The settling time of the comparator voltage reference must be considered when changing the CVREF output (see Table 26-2 in **Section 26.0 "Electrical Characteristics"**).

REGISTER 21-1: CVRCON: COMPARATOR VOLTAGE REFERENCE CONTROL REGISTER

R/W-0	R/W-0	R/W-0	U-0	R/W-0	R/W-0	R/W-0	R/W-0
CVREN	CVROE(1)	CVRR	—	CVR3	CVR2	CVR1	CVR0
bit 7							bit 0

Legend:			
R = Readable bit	W = Writable bit	U = Unimplemented bit, read as '0'	
-n = Value at POR	'1' = Bit is set	'0' = Bit is cleared	x = Bit is unknown

bit 7 **CVREN**: Comparator Voltage Reference Enable bit
1 = CVREF circuit powered on
0 = CVREF circuit powered down

bit 6 **CVROE**: Comparator VREF Output Enable bit(1)
1 = CVREF voltage level is also output on the RA2/AN2/VREF-/CVREF pin
0 = CVREF voltage is disconnected from the RA2/AN2/VREF-/CVREF pin

bit 5 **CVRR**: Comparator VREF Range Selection bit
1 = 0.00 VDD to 0.667 VDD, with VDD/24 step size
0 = 0.25 VDD to 0.75 VDD, with VDD/32 step size

bit 4 **Unimplemented:** Read as '0'

bit 3-0 **CVR3:CVR0:** Comparator VREF Value Selection 0 ≤ VR3:VR0 ≤ 15 bits

When CVRR = 1:
$CV_{REF} = (CVR\langle 3:0\rangle) \bullet \frac{V_{DD}}{24}$

When CVRR = 0:
$CV_{REF} = 1/4 \bullet (CV_{RSRC}) + (CVR\langle 3:0\rangle + 8) \bullet \frac{V_{DD}}{32}$

Note 1: CVROE overrides the TRISA<2> bit setting.

FIGURE 21-1: COMPARATOR VOLTAGE REFERENCE BLOCK DIAGRAM

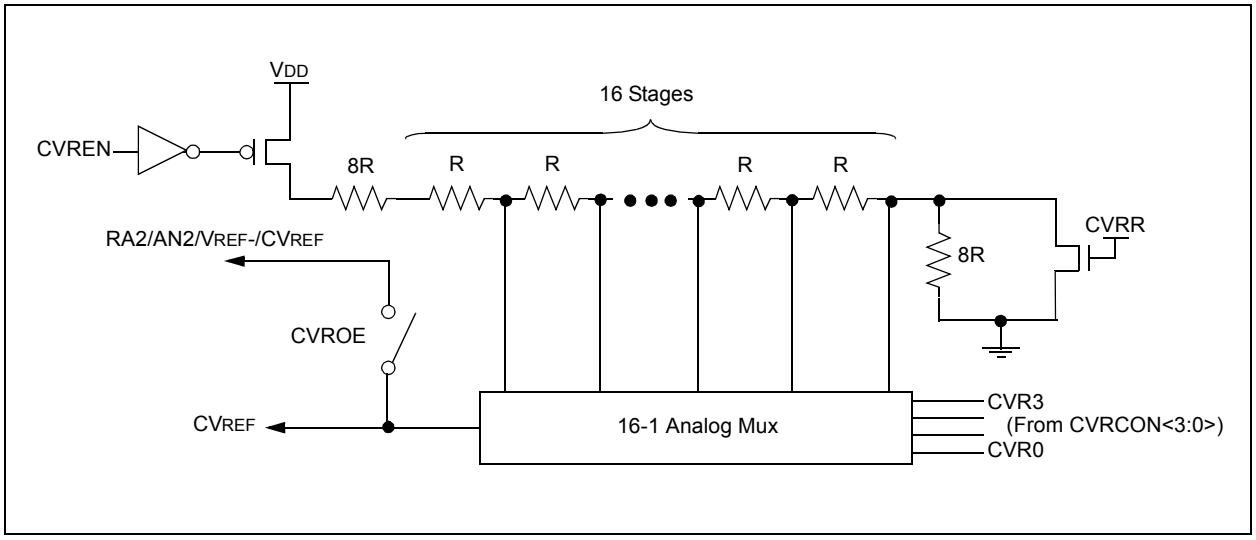

21.2 Voltage Reference Accuracy/Error

The full range of voltage reference cannot be realized due to the construction of the module. The transistors on the top and bottom of the resistor ladder network (Figure 21-1) keep CVREF from approaching the reference source rails. The voltage reference is derived from VDD; therefore, the CVREF output changes with fluctuations in VDD. The tested absolute accuracy of the voltage reference can be found in **Section 26.0 "Electrical Characteristics"**.

21.3 Operation in Power-Managed Modes

The contents of the CVRCON register are not affected by entry to or exit from power-managed modes. To minimize current consumption in power-managed modes, the voltage reference module should be disabled; however, this can cause an interrupt from the comparators so the comparator interrupt should also be disabled while the CVRCON register is being modified.

21.4 Effects of a Reset

A device Reset disables the voltage reference by clearing the CVRCON register. This also disconnects the reference from the RA2 pin, selects the high-voltage range and selects the lowest voltage tap from the resistor divider.

21.5 Connection Considerations

The voltage reference module operates independently of the comparator module. The output of the reference generator may be output using the RA2 pin if the CVROE bit is set. Enabling the voltage reference output onto the RA2 pin, with an input signal present, will increase current consumption.

The RA2 pin can be used as a simple D/A output with limited drive capability. Due to the limited current drive capability, an external buffer must be used on the voltage reference output for external connections to VREF. Figure 21-2 shows an example buffering technique.

© 2007 Microchip Technology Inc.

FIGURE 21-2: VOLTAGE REFERENCE OUTPUT BUFFER EXAMPLE

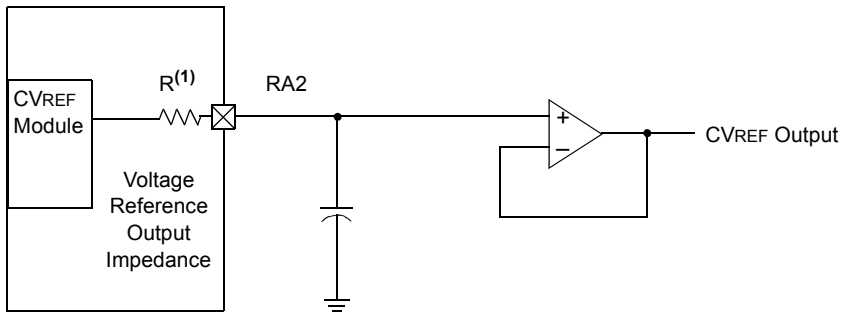

Note 1: R is dependent upon the voltage reference configuration bits (CVRCON<3:0> and CVRCON<5>).

TABLE 21-1: REGISTERS ASSOCIATED WITH COMPARATOR VOLTAGE REFERENCE

Name	Bit 7	Bit 6	Bit 5	Bit 4	Bit 3	Bit 2	Bit 1	Bit 0	Value on POR	Value on all other Resets
CVRCON	CVREN	CVROE	CVRR	—	CVR3	CVR2	CVR1	CVR0	000- 0000	000- 0000
CMCON	C2OUT	C1OUT	C2INV	C1INV	CIS	CM2	CM1	CM0	0000 0111	0000 0111
TRISA	RA7(1)	RA6(1)	RA5	RA4	RA3	RA2	RA1	RA0	1111 1111	1111 1111

Legend: x = unknown, u = unchanged, - = unimplemented, read as '0'.
Shaded cells are not used with the comparator voltage reference.

Note 1: These pins are enabled based on oscillator configuration (see Configuration Register 1H).

NOTES:

© 2007 Microchip Technology Inc.

22.0 LOW-VOLTAGE DETECT

In many applications, the ability to determine if the device voltage (V_{DD}) is below a specified voltage level is a desirable feature. A window of operation for the application can be created, where the application software can do “housekeeping tasks” before the device voltage exits the valid operating range. This can be done using the Low-Voltage Detect (LVD) module.

This module is a software programmable circuitry, where a device voltage trip point can be specified. When the voltage of the device becomes lower then the specified point, an interrupt flag is set. If the interrupt is enabled, the program execution will branch to the interrupt vector address and the software can then respond to that interrupt source.

The Low-Voltage Detect circuitry is completely under software control. This allows the circuitry to be turned off by the software which minimizes the current consumption for the device.

Figure 22-1 shows a possible application voltage curve (typically for batteries). Over time, the device voltage decreases. When the device voltage equals voltage V_A, the LVD logic generates an interrupt. This occurs at time T_A. The application software then has the time, until the device voltage is no longer in valid operating range, to shut down the system. Voltage point V_B is the minimum valid operating voltage specification. This occurs at time T_B. The difference, $T_B - T_A$, is the total time for shutdown.

The block diagram for the LVD module is shown in Figure 22-2. A comparator uses an internally generated reference voltage as the set point. When the selected tap output of the device voltage crosses the set point (is lower than), the LVDIF bit is set.

Each node in the resistor divider represents a “trip point” voltage. The “trip point” voltage is the minimum supply voltage level at which the device can operate before the LVD module asserts an interrupt. When the supply voltage is equal to the trip point, the voltage tapped off of the resistor array is equal to the 1.2V internal reference voltage generated by the voltage reference module. The comparator then generates an interrupt signal setting the LVDIF bit. This voltage is software programmable to any one of 16 values (see Figure 22-2). The trip point is selected by programming the LVDL3:LVDL0 bits (LVDCON<3:0>).

FIGURE 22-1: TYPICAL LOW-VOLTAGE DETECT APPLICATION

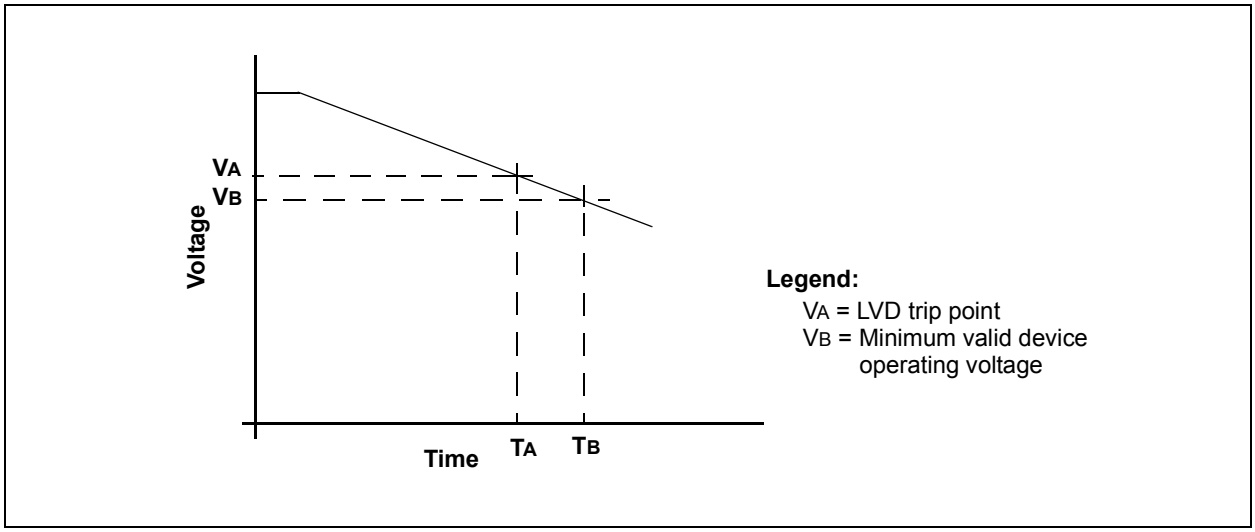

FIGURE 22-2: LOW-VOLTAGE DETECT (LVD) BLOCK DIAGRAM

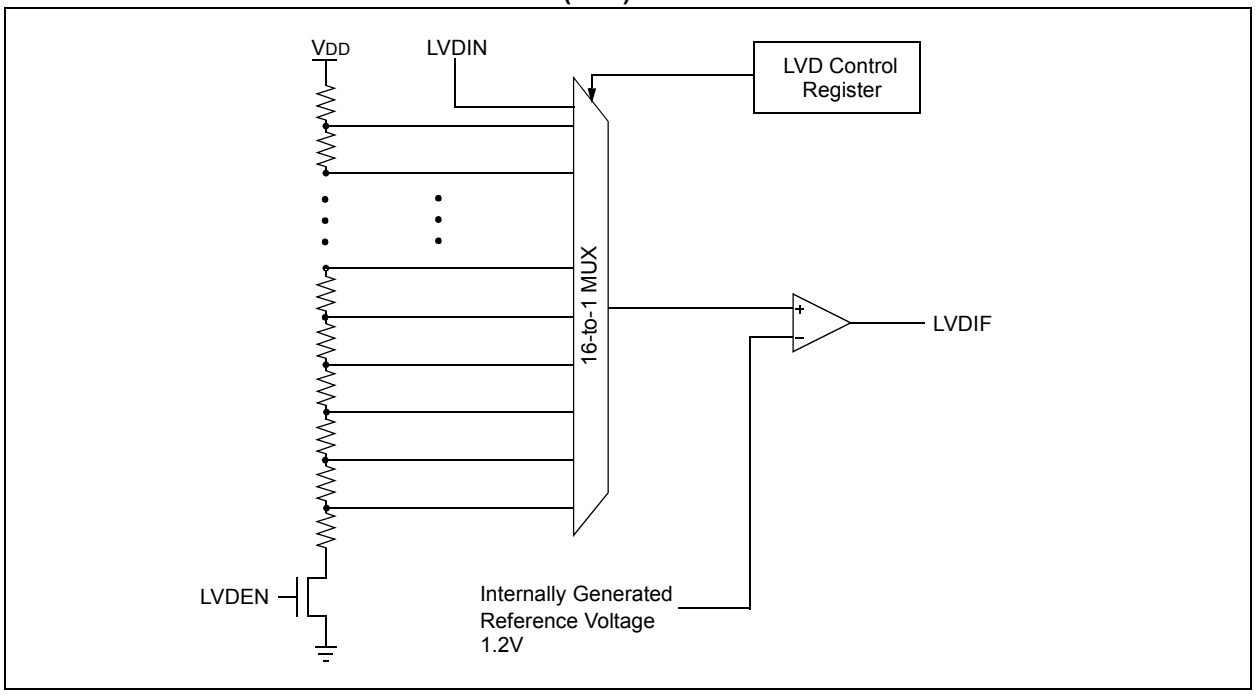

The LVD module has an additional feature that allows the user to supply the sense voltage to the module from an external source. This mode is enabled when bits LVDL3:LVDL0 are set to '1111'. In this state, the comparator input is multiplexed from the external input pin, LVDIN (Figure 22-3). This gives users flexibility because it allows them to configure the Low-Voltage Detect interrupt to occur at any voltage in the valid operating range.

FIGURE 22-3: LOW-VOLTAGE DETECT (LVD) WITH EXTERNAL INPUT BLOCK DIAGRAM

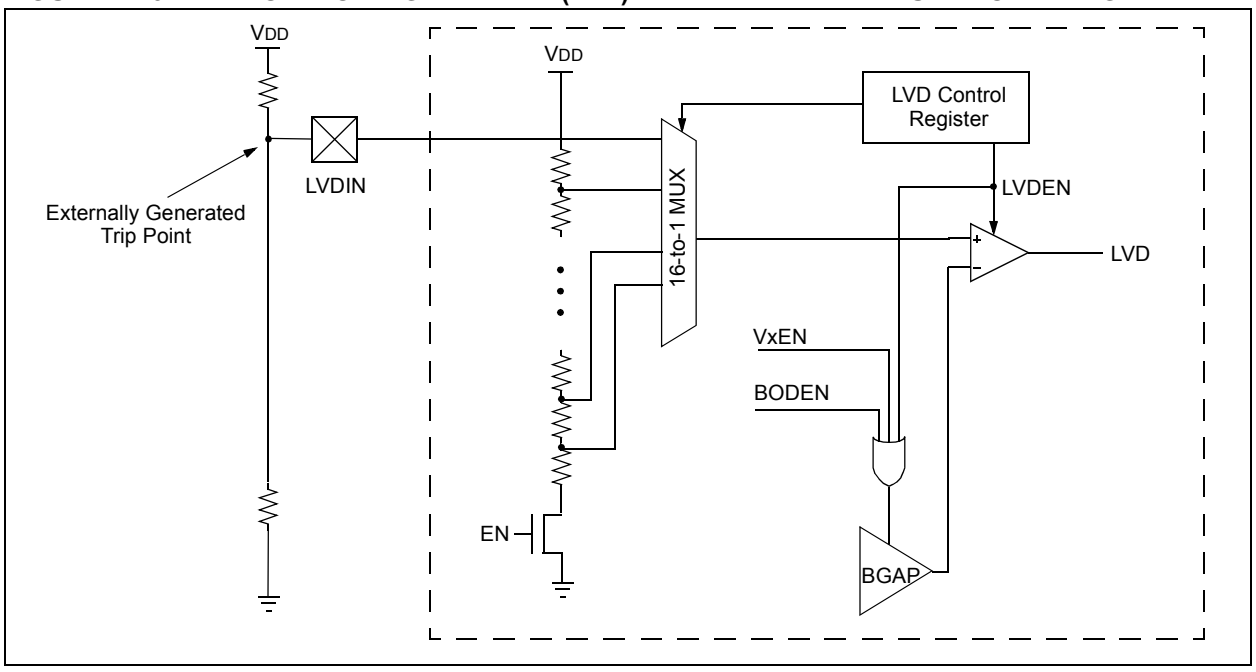

© 2007 Microchip Technology Inc.

22.1 Control Register

The Low-Voltage Detect Control register controls the operation of the Low-Voltage Detect circuitry.

REGISTER 22-1: LVDCON: LOW-VOLTAGE DETECT CONTROL REGISTER

U-0	U-0	R-0	R/W-0	R/W-0	R/W-1	R/W-0	R/W-1
—	—	IRVST	LVDEN	LVDL3(1)	LVDL2(1)	LVDL1(1)	LVDL0(1)
bit 7							bit 0

Legend:			
R = Readable bit	W = Writable bit	U = Unimplemented bit, read as '0'	
-n = Value at POR	'1' = Bit is set	'0' = Bit is cleared	x = Bit is unknown

bit 7-6 **Unimplemented:** Read as '0'

bit 5 **IRVST:** Internal Reference Voltage Stable Flag bit
- 1 = Indicates that the Low-Voltage Detect logic will generate the interrupt flag at the specified voltage range
- 0 = Indicates that the Low-Voltage Detect logic will not generate the interrupt flag at the specified voltage range and the LVD interrupt should not be enabled

bit 4 **LVDEN:** Low-Voltage Detect Power Enable bit
- 1 = Enables LVD, powers up LVD circuit
- 0 = Disables LVD, powers down LVD circuit

bit 3-0 **LVDL3:LVDL0:** Low-Voltage Detection Limit bits(1)
- 1111 = External analog input is used (input comes from the LVDIN pin)
- 1110 = 4.50V-4.78V
- 1101 = 4.20V-4.46V
- 1100 = 4.00V-4.26V
- 1011 = 3.80V-4.04V
- 1010 = 3.60V-3.84V
- 1001 = 3.50V-3.72V
- 1000 = 3.30V-3.52V
- 0111 = 3.00V-3.20V
- 0110 = 2.80V-2.98V
- 0101 = 2.70V-2.86V
- 0100 = 2.50V-2.66V
- 0011 = 2.40V-2.55V
- 0010 = 2.20V-2.34V
- 0001 = 2.00V-2.12V
- 0000 = Reserved

Note 1: LVDL3:LVDL0 modes which result in a trip point below the valid operating voltage of the device are not tested.

22.2 Operation

Depending on the power source for the device voltage, the voltage normally decreases relatively slowly. This means that the LVD module does not need to be constantly operating. To decrease the current requirements, the LVD circuitry only needs to be enabled for short periods where the voltage is checked. After doing the check, the LVD module may be disabled.

Each time that the LVD module is enabled, the circuitry requires some time to stabilize. After the circuitry has stabilized, all status flags may be cleared. The module will then indicate the proper state of the system.

The following steps are needed to set up the LVD module:

1. Write the value to the LVDL3:LVDL0 bits (LVDCON register) which selects the desired LVD trip point.
2. Ensure that LVD interrupts are disabled (the LVDIE bit is cleared or the GIE bit is cleared).
3. Enable the LVD module (set the LVDEN bit in the LVDCON register).
4. Wait for the LVD module to stabilize (the IRVST bit to become set).
5. Clear the LVD interrupt flag, which may have falsely become set, until the LVD module has stabilized (clear the LVDIF bit).
6. Enable the LVD interrupt (set the LVDIE and the GIE bits).

Figure 22-4 shows typical waveforms that the LVD module may be used to detect.

FIGURE 22-4: LOW-VOLTAGE DETECT WAVEFORMS

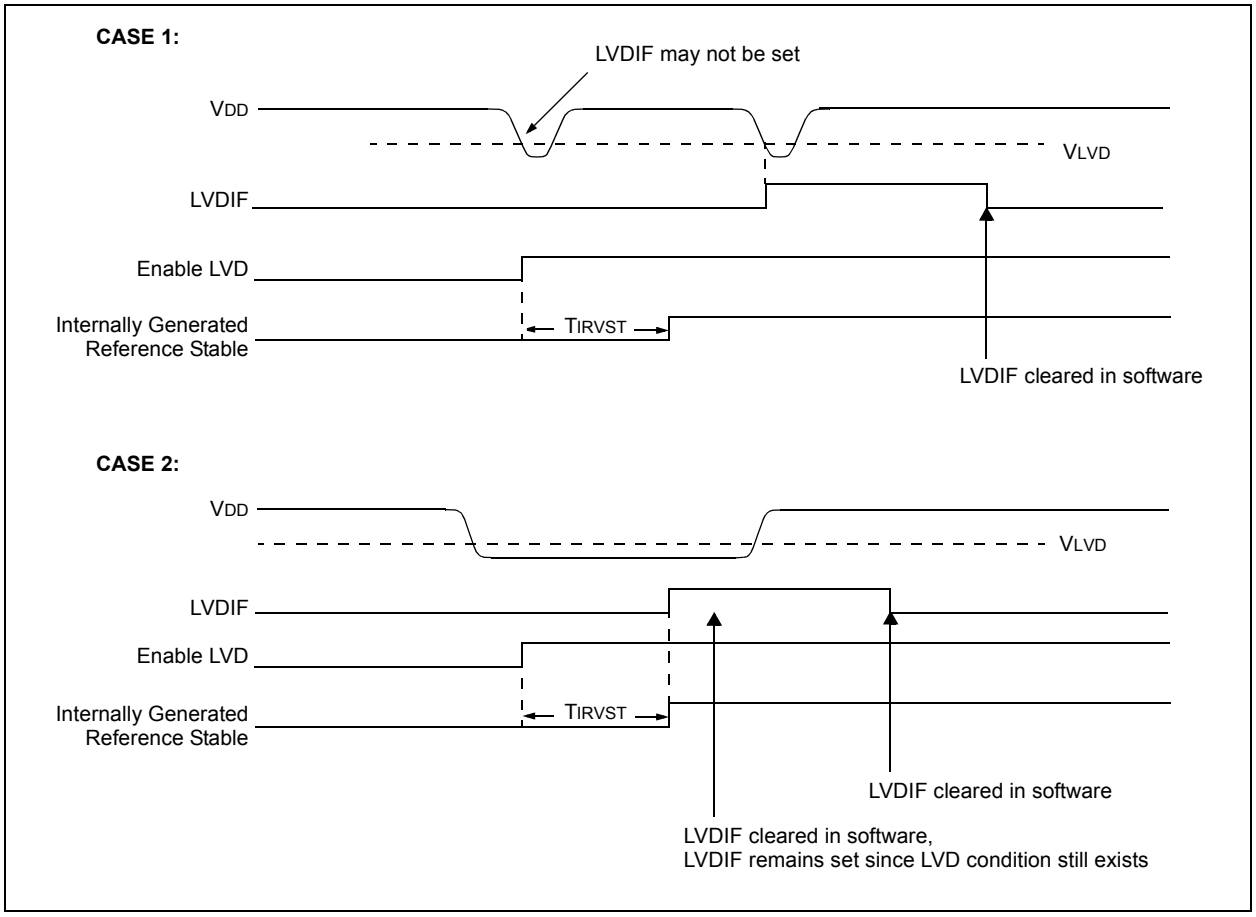

© 2007 Microchip Technology Inc.

22.2.1 REFERENCE VOLTAGE SET POINT

The internal reference voltage of the LVD module may be used by other internal circuitry (the Programmable Brown-out Reset). If these circuits are disabled (lower current consumption), the reference voltage circuit requires a time to become stable before a low-voltage condition can be reliably detected. This time is invariant of system clock speed. This start-up time is specified in electrical specification parameter #36. The low-voltage interrupt flag will not be enabled until a stable reference voltage is reached. Refer to the waveform in Figure 22-4.

22.2.2 CURRENT CONSUMPTION

When the module is enabled, the LVD comparator and voltage divider are enabled and will consume static current. The voltage divider can be tapped from multiple places in the resistor array. Total current consumption, when enabled, is specified in electrical specification parameter #D022B.

22.3 Operation During Sleep

When enabled, the LVD circuitry continues to operate during Sleep. If the device voltage crosses the trip point, the LVDIF bit will be set and the device will wake-up from Sleep. Device execution will continue from the interrupt vector address if interrupts have been globally enabled.

22.4 Effects of a Reset

A device Reset forces all registers to their Reset state. This forces the LVD module to be turned off.

NOTES:

© 2007 Microchip Technology Inc.

23.0 SPECIAL FEATURES OF THE CPU

PIC18F2X20/4X20 devices include several features intended to maximize system reliability and minimize cost through elimination of external components. These are:

- Oscillator Selection
- Resets:
  - Power-on Reset (POR)
  - Power-up Timer (PWRT)
  - Oscillator Start-up Timer (OST)
  - Brown-out Reset (BOR)
- Interrupts
- Watchdog Timer (WDT)
- Fail-Safe Clock Monitor
- Two-Speed Start-up
- Code Protection
- ID Locations
- In-Circuit Serial Programming

The oscillator can be configured for the application depending on frequency, power, accuracy and cost. All of the options are discussed in detail in **Section 2.0 "Oscillator Configurations"**.

A complete discussion of device Resets and interrupts is available in previous sections of this data sheet.

In addition to their Power-up and Oscillator Start-up Timers provided for Resets, PIC18F2X20/4X20 devices have a Watchdog Timer which is either permanently enabled via the Configuration bits or software controlled (if configured as disabled).

The inclusion of an internal RC oscillator also provides the additional benefits of a Fail-Safe Clock Monitor (FSCM) and Two-Speed Start-up. FSCM provides for background monitoring of the peripheral clock and automatic switchover in the event of its failure. Two-Speed Start-up enables code to be executed almost immediately on start-up while the primary clock source completes its start-up delays.

All of these features are enabled and configured by setting the appropriate Configuration register bits.

23.1 Configuration Bits

The Configuration bits can be programmed (read as '0') or left unprogrammed (read as '1') to select various device configurations. These bits are mapped starting at program memory location 300000h.

The user will note that address 300000h is beyond the user program memory space. In fact, it belongs to the configuration memory space (300000h-3FFFFFh) which can only be accessed using table reads and table writes.

Programming the Configuration registers is done in a manner similar to programming the Flash memory. The EECON1 register WR bit starts a self-timed write to the Configuration register. In normal operation mode, a TBLWT instruction, with the TBLPTR pointing to the Configuration register, sets up the address and the data for the Configuration register write. Setting the WR bit starts a long write to the Configuration register. The Configuration registers are written a byte at a time. To write or erase a configuration cell, a TBLWT instruction can write a '1' or a '0' into the cell. For additional details on Flash programming, refer to **Section 6.5 "Writing to Flash Program Memory"**.

TABLE 23-1: CONFIGURATION BITS AND DEVICE IDS

File Name		Bit 7	Bit 6	Bit 5	Bit 4	Bit 3	Bit 2	Bit 1	Bit 0	Default/ Unprogrammed Value
300001h	CONFIG1H	IESO	FSCM	—	—	FOSC3	FOSC2	FOSC1	FOSC0	11-- 1111
300002h	CONFIG2L	—	—	—	—	BORV1	BORV0	BOR	$\overline{\text{PWRT}}$	---- 1111
300003h	CONFIG2H	—	—	—	WDTPS3	WDTPS2	WDTPS1	WDTPS0	WDTEN	---1 1111
300005h	CONFIG3H	MCLRE	—	—	—	—	—	PBAD	CCP2MX	1--- --11
300006h	CONFIG4L	$\overline{\text{DEBUG}}$	—	—	—	—	LVP	—	STVR	1--- -1-1
300008h	CONFIG5L	—	—	—	—	CP3(2)	CP2(2)	CP1	CP0	---- 1111
300009h	CONFIG5H	CPD	CPB	—	—	—	—	—	—	11-- ----
30000Ah	CONFIG6L	—	—	—	—	WRT3(2)	WRT2(2)	WRT1	WRT0	---- 1111
30000Bh	CONFIG6H	WRTD	WRTB	WRTC	—	—	—	—	—	111- ----
30000Ch	CONFIG7L	—	—	—	—	EBTR3(2)	EBTR2(2)	EBTR1	EBTR0	---- 1111
30000Dh	CONFIG7H	—	EBTRB	—	—	—	—	—	—	-1-- ----
3FFFFEh	DEVID1(1)	DEV2	DEV1	DEV0	REV4	REV3	REV2	REV1	REV0	xxxx xxxx(1)
3FFFFFh	DEVID2(1)	DEV10	DEV9	DEV8	DEV7	DEV6	DEV5	DEV4	DEV3	0000 0101

Legend: x = unknown, u = unchanged, - = unimplemented, q = value depends on condition.
Shaded cells are unimplemented, read as '0'.

Note 1: See Register 23-12 for DEVID1 values. DEVID registers are read-only and cannot be programmed by the user.

2: Unimplemented in PIC18FX220 devices; maintain this bit set.

REGISTER 23-1: CONFIG1H: CONFIGURATION REGISTER 1 HIGH (BYTE ADDRESS 300001h)

R/P-1	R/P-1	U-0	U-0	R/P-1	R/P-1	R/P-1	R/P-1
IESO	FSCM	—	—	FOSC3	FOSC2	FOSC1	FOSC0
bit 7							bit 0

Legend:		
R = Readable bit	P = Programmable bit	U = Unimplemented bit, read as '0'
-n = Value when device is unprogrammed		u = Unchanged from programmed state

bit 7 **IESO:** Internal/External Switchover bit
1 = Internal/External Switchover mode enabled
0 = Internal/External Switchover mode disabled

bit 6 **FCMEN:** Fail-Safe Clock Monitor Enable bit
1 = Fail-Safe Clock Monitor enabled
0 = Fail-Safe Clock Monitor disabled

bit 5-4 **Unimplemented:** Read as '0'

bit 3-0 **FOSC3:FOSC0:** Oscillator Selection bits(1)
11xx = External RC oscillator, CLKO function on RA6
1001 = Internal oscillator block, CLKO function on RA6 and port function on RA7
1000 = Internal oscillator block, port function on RA6 and port function on RA7
0111 = External RC oscillator, port function on RA6
0110 = HS oscillator, PLL enabled (clock frequency = 4 x FOSC1)
0101 = EC oscillator, port function on RA6
0100 = EC oscillator, CLKO function on RA6
0010 = HS oscillator
0001 = XT oscillator
0000 = LP oscillator

© 2007 Microchip Technology Inc.

REGISTER 23-2: CONFIG2L: CONFIGURATION REGISTER 2 LOW (BYTE ADDRESS 300002h)

U-0	U-0	U-0	U-0	R/P-1	R/P-1	R/P-1	R/P-1
—	—	—	—	BORV1	BORV0	BOR(1)	$\overline{\text{PWRTEN}}$(1)
bit 7							bit 0

Legend:		
R = Readable bit	P = Programmable bit	U = Unimplemented bit, read as '0'
-n = Value when device is unprogrammed		u = Unchanged from programmed state

bit 7-4 **Unimplemented:** Read as '0'

bit 3-2 **BORV1:BORV0:** Brown-out Reset Voltage bits
11 = V_{BOR} set to 2.0V
10 = V_{BOR} set to 2.7V
01 = V_{BOR} set to 4.2V
00 = V_{BOR} set to 4.5V

bit 1 **BOR:** Brown-out Reset enable bit(1)
1 = Brown-out Reset enabled
0 = Brown-out Reset disabled

bit 0 **$\overline{\text{PWRT}}$:** Power-up Timer enable bit(1)
1 = PWRT disabled
0 = PWRT enabled

Note 1: The Power-up Timer is decoupled from Brown-out Reset, allowing these features to be independently controlled.

REGISTER 23-3: CONFIG2H: CONFIGURATION REGISTER 2 HIGH (BYTE ADDRESS 300003h)

U-0	U-0	U-0	R/P-1	R/P-1	R/P-1	R/P-1	R/P-1
—	—	—	WDTPS3	WDTPS2	WDTPS1	WDTPS0	WDTEN
bit 7							bit 0

Legend:		
R = Readable bit	P = Programmable bit	U = Unimplemented bit, read as '0'
-n = Value when device is unprogrammed		u = Unchanged from programmed state

bit 7-5 **Unimplemented:** Read as '0'

bit 4-1 **WDPS<3:0>:** Watchdog Timer Postscale Select bits

1111 = 1:32,768
1110 = 1:16,384
1101 = 1:8,192
1100 = 1:4,096
1011 = 1:2,048
1010 = 1:1,024
1001 = 1:512
1000 = 1:256
0111 = 1:128
0110 = 1:64
0101 = 1:32
0100 = 1:16
0011 = 1:8
0010 = 1:4
0001 = 1:2
0000 = 1:1

bit 0 **WDTEN:** Watchdog Timer Enable bit

1 = WDT enabled
0 = WDT disabled (control is placed on the SWDTEN bit)

© 2007 Microchip Technology Inc.

REGISTER 23-4: CONFIG3H: CONFIGURATION REGISTER 3 HIGH (BYTE ADDRESS 300005h)

R/P-1	U-0	U-0	U-0	U-0	U-0	R/P-1	R/P-1
MCLRE	—	—	—	—	—	PBAD	CCP2MX
bit 7							bit 0

Legend:		
R = Readable bit	P = Programmable bit	U = Unimplemented bit, read as '0'
-n = Value when device is unprogrammed		u = Unchanged from programmed state

bit 7 **MCLRE:** $\overline{\text{MCLR}}$ Pin Enable bit
1 = $\overline{\text{MCLR}}$ pin enabled; RE3 input pin disabled
0 = $\overline{\text{MCLR}}$ disabled; RE3 input is enabled in 40-pin devices only (PIC18F4X20)

bit 6-2 **Unimplemented:** Read as '0'

bit 1 **PBAD:** PORTB A/D Enable bit (Affects ADCON1 Reset state. ADCON1 controls PORTB<4:0> pin configuration.)
1 = PORTB<4:0> pins are configured as analog input channels on Reset
0 = PORTB<4:0> pins are configured as digital I/O on Reset

bit 0 **CCP2MX:** CCP2 MUX bit
1 = CCP2 input/output is multiplexed with RC1
0 = CCP2 input/output is multiplexed with RB3

REGISTER 23-5: CONFIG4L: CONFIGURATION REGISTER 4 LOW (BYTE ADDRESS 300006h)

R/P-1	U-0	U-0	U-0	U-0	R/P-1	U-0	R/P-1
$\overline{\text{DEBUG}}$	—	—	—	—	LVP	—	STVR
bit 7							bit 0

Legend:		
R = Readable bit	P = Programmable bit	U = Unimplemented bit, read as '0'
-n = Value when device is unprogrammed		u = Unchanged from programmed state

bit 7 **$\overline{\text{DEBUG}}$:** Background Debugger Enable bit
1 = Background debugger disabled, RB6 and RB7 configured as general purpose I/O pins
0 = Background debugger enabled, RB6 and RB7 are dedicated to In-Circuit Debug

bit 6-3 **Unimplemented:** Read as '0'

bit 2 **LVP:** Single-Supply ICSP™ Enable bit
1 = Single-Supply ICSP enabled
0 = Single-Supply ICSP disabled

bit 1 **Unimplemented:** Read as '0'

bit 0 **STVR:** Stack Full/Underflow Reset Enable bit
1 = Stack full/underflow will cause Reset
0 = Stack full/underflow will not cause Reset

REGISTER 23-6: CONFIG5L: CONFIGURATION REGISTER 5 LOW (BYTE ADDRESS 300008h)

U-0	U-0	U-0	U-0	R/C-1	R/C-1	R/C-1	R/C-1
—	—	—	—	CP3(1)	CP2(1)	CP1	CP0
bit 7							bit 0

Legend:		
R = Readable bit	C = Clearable bit	U = Unimplemented bit, read as '0'
-n = Value when device is unprogrammed		u = Unchanged from programmed state

bit 7-4 **Unimplemented:** Read as '0'

bit 3 **CP3:** Code Protection bit(1)
- 1 = Block 3 (001800-001FFFh) not code-protected
- 0 = Block 3 (001800-001FFFh) code-protected

bit 2 **CP2:** Code Protection bit(1)
- 1 = Block 2 (001000-0017FFh) not code-protected
- 0 = Block 2 (001000-0017FFh) code-protected

bit 1 **CP1:** Code Protection bit
- 1 = Block 1 (000800-000FFFh) not code-protected
- 0 = Block 1 (000800-000FFFh) code-protected

bit 0 **CP0:** Code Protection bit
- 1 = Block 0 (000200-0007FFh) not code-protected
- 0 = Block 0 (000200-0007FFh) code-protected

Note 1: Unimplemented in PIC18FX220 devices; maintain this bit set.

REGISTER 23-7: CONFIG5H: CONFIGURATION REGISTER 5 HIGH (BYTE ADDRESS 300009h)

R/C-1	R/C-1	U-0	U-0	U-0	U-0	U-0	U-0
CPD	CPB	—	—	—	—	—	—
bit 7							bit 0

Legend:		
R = Readable bit	C = Clearable bit	U = Unimplemented bit, read as '0'
-n = Value when device is unprogrammed		u = Unchanged from programmed state

bit 7 **CPD:** Data EEPROM Code Protection bit
- 1 = Data EEPROM is not code-protected
- 0 = Data EEPROM is code-protected

bit 6 **CPB:** Boot Block Code Protection bit
- 1 = Boot block (000000-0001FFh) is not code-protected
- 0 = Boot block (000000-0001FFh) is code-protected

bit 5-0 **Unimplemented:** Read as '0'

© 2007 Microchip Technology Inc.

REGISTER 23-8: CONFIG6L: CONFIGURATION REGISTER 6 LOW (BYTE ADDRESS 30000Ah)

U-0	U-0	U-0	U-0	R/P-1	R/P-1	R/P-1	R/P-1
—	—	—	—	WRT3(1)	WRT2(1)	WRT1	WRT0
bit 7							bit 0

Legend:		
R = Readable bit	P = Programmable bit	U = Unimplemented bit, read as '0'
-n = Value when device is unprogrammed		u = Unchanged from programmed state

bit 7-4 **Unimplemented:** Read as '0'

bit 3 **WRT3:** Write Protection bit(1)
1 = Block 3 (001800-001FFFh) not write-protected
0 = Block 3 (001800-001FFFh) write-protected

bit 2 **WRT2:** Write Protection bit(1)
1 = Block 2 (001000-0017FFh) not write-protected
0 = Block 2 (001000-0017FFh) write-protected

bit 1 **WRT1:** Write Protection bit
1 = Block 1 (000800-000FFFh) not write-protected
0 = Block 1 (000800-000FFFh) write-protected

bit 0 **WRT0:** Write Protection bit
1 = Block 0 (000200-0007FFh) not write-protected
0 = Block 0 (000200-0007FFh) write-protected

Note 1: Unimplemented in PIC18FX220 devices; maintain this bit set.

REGISTER 23-9: CONFIG6H: CONFIGURATION REGISTER 6 HIGH (BYTE ADDRESS 30000Bh)

R/P-1	R/P-1	R-1	U-0	U-0	U-0	U-0	U-0
WRTD	WRTB	WRTC(1)	—	—	—	—	—
bit 7							bit 0

Legend:		
R = Readable bit	P = Programmable bit	U = Unimplemented bit, read as '0'
-n = Value when device is unprogrammed		u = Unchanged from programmed state

bit 7 **WRTD:** Data EEPROM Write Protection bit
1 = Data EEPROM is not write-protected
0 = Data EEPROM is write-protected

bit 6 **WRTB:** Boot Block Write Protection bit
1 = Boot block (000000-0001FFh) is not write-protected
0 = Boot block (000000-0001FFh) is write-protected

bit 5 **WRTC:** Configuration Register Write Protection bit(1)
1 = Configuration registers (300000-3000FFh) are not write-protected
0 = Configuration registers (300000-3000FFh) are write-protected

bit 4-0 **Unimplemented:** Read as '0'

Note 1: This bit is read-only in normal execution mode; it can be written only in Program mode.

REGISTER 23-10: CONFIG7L: CONFIGURATION REGISTER 7 LOW (BYTE ADDRESS 30000Ch)

U-0	U-0	U-0	U-0	R/P-1	R/P-1	R/P-1	R/P-1
—	—	—	—	EBTR3(1)	EBTR2(1)	EBTR1	EBTR0
bit 7							bit 0

Legend:		
R = Readable bit	P = Programmable bit	U = Unimplemented bit, read as '0'
-n = Value when device is unprogrammed		u = Unchanged from programmed state

bit 7-4 **Unimplemented:** Read as '0'

bit 3 **EBTR3:** Table Read Protection bit(1)
1 = Block 3 (001800-001FFFh) not protected from table reads executed in other blocks
0 = Block 3 (001800-001FFFh) protected from table reads executed in other blocks

bit 2 **EBTR2:** Table Read Protection bit(1)
1 = Block 2 (001000-0017FFh) not protected from table reads executed in other blocks
0 = Block 2 (001000-0017FFh) protected from table reads executed in other blocks

bit 1 **EBTR1:** Table Read Protection bit
1 = Block 1 (000800-000FFFh) not protected from table reads executed in other blocks
0 = Block 1 (000800-000FFFh) protected from table reads executed in other blocks

bit 0 **EBTR0:** Table Read Protection bit
1 = Block 0 (000200-0007FFh) not protected from table reads executed in other blocks
0 = Block 0 (000200-0007FFh) protected from table reads executed in other blocks

Note 1: Unimplemented in PIC18FX220 devices; maintain this bit set.

REGISTER 23-11: CONFIG7H: CONFIGURATION REGISTER 7 HIGH (BYTE ADDRESS 30000Dh)

U-0	R/P-1	U-0	U-0	U-0	U-0	U-0	U-0
—	EBTRB	—	—	—	—	—	—
bit 7							bit 0

Legend:		
R = Readable bit	P = Programmable bit	U = Unimplemented bit, read as '0'
-n = Value when device is unprogrammed		u = Unchanged from programmed state

bit 7 **Unimplemented:** Read as '0'

bit 6 **EBTRB:** Boot Block Table Read Protection bit
1 = Boot block (000000-0001FFh) is not protected from table reads executed in other blocks
0 = Boot block (000000-0001FFh) is protected from table reads executed in other blocks

bit 5-0 **Unimplemented:** Read as '0'

© 2007 Microchip Technology Inc.

REGISTER 23-12: DEVID1: DEVICE ID REGISTER 1 FOR PIC18F2220/2320/4220/4320 DEVICES

R	R	R	R	R	R	R	R
DEV2	DEV1	DEV0	REV4	REV3	REV2	REV1	REV0
bit 7							bit 0

Legend:		
R = Read-only bit	P = Programmable bit	U = Unimplemented bit, read as '0'
-n = Value when device is unprogrammed		u = Unchanged from programmed state

bit 7-5 **DEV2:DEV0:** Device ID bits
000 = PIC18F2320
001 = PIC18F4320
100 = PIC18F2220
101 = PIC18F4220

bit 4-0 **REV3:REV0:** Revision ID bits
These bits are used to indicate the device revision.

REGISTER 23-13: DEVID2: DEVICE ID REGISTER 2 FOR PIC18F2220/2320/4220/4320 DEVICES

R	R	R	R	R	R	R	R
DEV10(1)	DEV9(1)	DEV8(1)	DEV7(1)	DEV6(1)	DEV5(1)	DEV4(1)	DEV3(1)
bit 7							bit 0

Legend:		
R = Read-only bit	P = Programmable bit	U = Unimplemented bit, read as '0'
-n = Value when device is unprogrammed		u = Unchanged from programmed state

bit 7-0 **DEV10:DEV3:** Device ID bits
These bits are used with the DEV2:DEV0 bits in the Device ID Register 1 to identify the part number.
0000 0101 = PIC18F2220/2320/4220/4320 devices

Note 1: These values for DEV10:DEV3 may be shared with other devices. The specific device is always identified by using the entire DEV10:DEV0 bit sequence.

23.2 Watchdog Timer (WDT)

For PIC18F2X20/4X20 devices, the WDT is driven by the INTRC source. When the WDT is enabled, the clock source is also enabled. The nominal WDT period is 4 ms and has the same stability as the INTRC oscillator.

The 4 ms period of the WDT is multiplied by a 16-bit postscaler. Any output of the WDT postscaler is selected by a multiplexer, controlled by bits in Configuration Register 2H. Available periods range from 4 ms to 131.072 seconds (2.18 minutes). The WDT and postscaler are cleared when any of the following events occur: execute a SLEEP or CLRWDT instruction, the IRCF bits (OSCCON<6:4>) are changed or a clock failure has occurred.

Adjustments to the internal oscillator clock period using the OSCTUNE register also affect the period of the WDT by the same factor. For example, if the INTRC period is increased by 3%, then the WDT period is increased by 3%.

Note 1:	The CLRWDT and SLEEP instructions clear the WDT and postscaler counts when executed.
2:	Changing the setting of the IRCF bits (OSCCON<6:4> clears the WDT and postscaler counts.
3:	When a CLRWDT instruction is executed, the postscaler count will be cleared.

23.2.1 CONTROL REGISTER

Register 23-14 shows the WDTCON register. This is a readable and writable register which contains a control bit that allows software to override the WDT enable Configuration bit, but only if the Configuration bit has disabled the WDT.

FIGURE 23-1: WDT BLOCK DIAGRAM

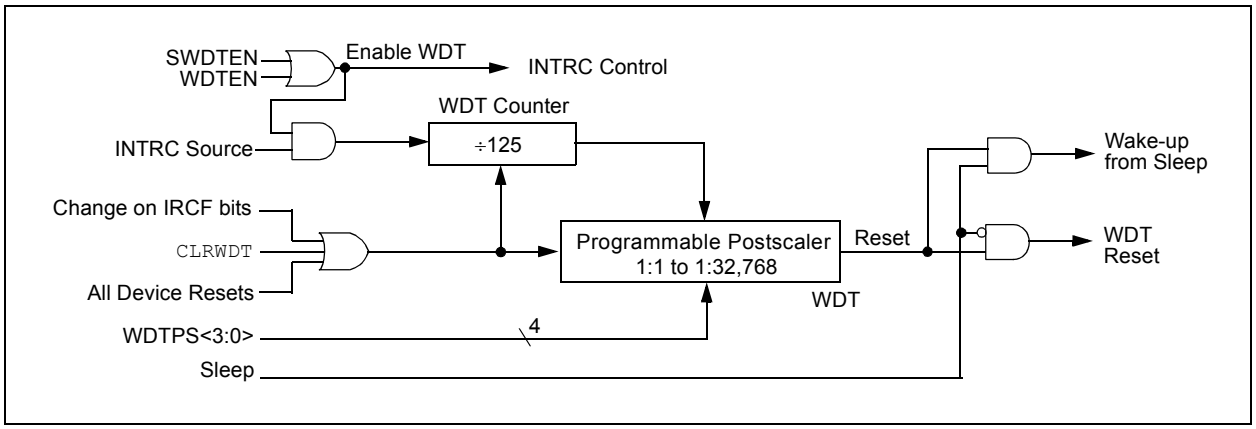

© 2007 Microchip Technology Inc.

REGISTER 23-14: WDTCON: WATCHDOG TIMER CONTROL REGISTER

U-0	U-0	U-0	U-0	U-0	U-0	U-0	R/W-0
—	—	—	—	—	—	—	SWDTEN(1)
bit 7							bit 0

Legend:			
R = Readable bit	W = Writable bit	U = Unimplemented bit, read as '0'	
-n = Value at POR	'1' = Bit is set	'0' = Bit is cleared	x = Bit is unknown

bit 7-1 **Unimplemented:** Read as '0'

bit 0 **SWDTEN:** Software Controlled Watchdog Timer Enable bit(1)
1 = Watchdog Timer is on
0 = Watchdog Timer is off

Note 1: This bit has no effect if the Configuration bit, WDTEN (CONFIG2H<0>), is enabled.

TABLE 23-2: SUMMARY OF WATCHDOG TIMER REGISTERS

Name	Bit 7	Bit 6	Bit 5	Bit 4	Bit 3	Bit 2	Bit 1	Bit 0
CONFIG2H	—	—	—	WDTPS3	WDTPS2	WDTPS2	WDTPS0	WDTEN
RCON	IPEN	—	—	$\overline{RI}$	$\overline{TO}$	$\overline{PD}$	$\overline{POR}$	$\overline{BOR}$
WDTCON	—	—	—	—	—	—	—	SWDTEN

Legend: Shaded cells are not used by the Watchdog Timer.

23.3 Two-Speed Start-up

The Two-Speed Start-up feature helps to minimize the latency period from oscillator start-up to code execution by allowing the microcontroller to use the INTRC oscillator as a clock source until the primary clock source is available. It is enabled by setting the IESO bit in Configuration Register 1H (CONFIG1H<7>).

Two-Speed Start-up is available only if the primary oscillator mode is LP, XT, HS or HSPLL (Crystal-Based modes). Other sources do not require a OST start-up delay; for these, Two-Speed Start-up is disabled.

When enabled, Resets and wake-ups from Sleep mode cause the device to configure itself to run from the internal oscillator block as the clock source, following the time-out of the Power-up Timer after a POR Reset is enabled. This allows almost immediate code execution while the primary oscillator starts and the OST is running. Once the OST times out, the device automatically switches to PRI_RUN mode.

Because the OSCCON register is cleared on Reset events, the INTOSC (or postscaler) clock source is not initially available after a Reset event; the INTRC clock is used directly at its base frequency. To use a higher clock speed on wake-up, the INTOSC or postscaler clock sources can be selected to provide a higher clock speed by setting bits IFRC2:IFRC0 immediately after Reset. For wake-ups from Sleep, the INTOSC or postscaler clock sources can be selected by setting IFRC2:IFRC0 prior to entering Sleep mode.

In all other power-managed modes, Two-Speed Start-up is not used. The device will be clocked by the currently selected clock source until the primary clock source becomes available. The setting of the IESO bit is ignored.

23.3.1 SPECIAL CONSIDERATIONS FOR USING TWO-SPEED START-UP

While using the INTRC oscillator in Two-Speed Start-up, the device still obeys the normal command sequences for entering power-managed modes, including serial SLEEP instructions (refer to **Section 3.1.3 "Multiple Sleep Commands"**). In practice, this means that user code can change the SCS1:SCS0 bit settings and issue SLEEP commands before the OST times out. This would allow an application to briefly wake-up, perform routine "housekeeping" tasks and return to Sleep before the device starts to operate from the primary oscillator.

User code can also check if the primary clock source is currently providing the system clocking by checking the status of the OSTS bit (OSCCON<3>). If the bit is set, the primary oscillator is providing the system clock. Otherwise, the internal oscillator block is providing the clock during wake-up from Reset or Sleep mode.

FIGURE 23-2: TIMING TRANSITION FOR TWO-SPEED START-UP (INTOSC TO HSPLL)

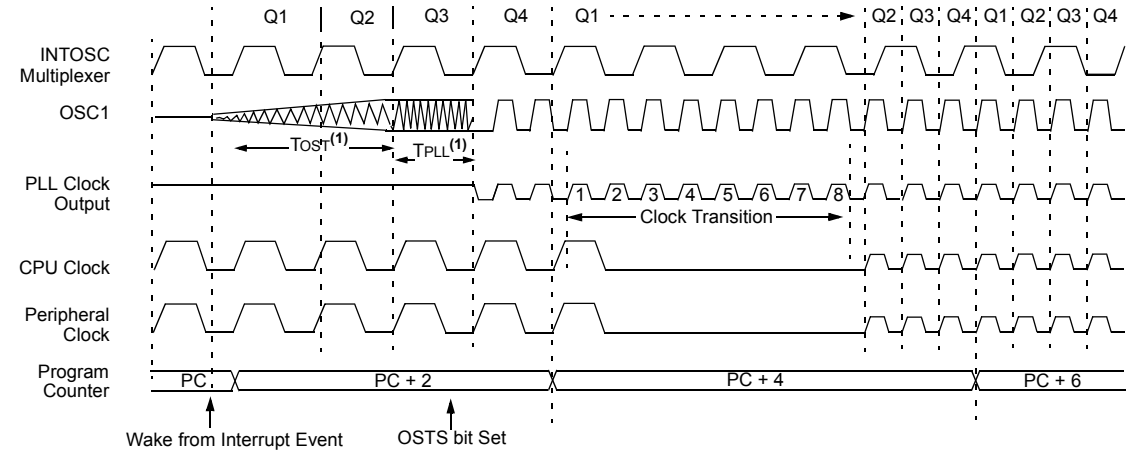

Note 1: TOST = 1024 TOSC; TPLL = 2 ms (approx). These intervals are not shown to scale.

© 2007 Microchip Technology Inc.

23.4 Fail-Safe Clock Monitor

The Fail-Safe Clock Monitor (FSCM) allows the microcontroller to continue operation, in the event of an external oscillator failure, by automatically switching the system clock to the internal oscillator block. The FSCM function is enabled by setting the Fail-Safe Clock Monitor Enable bit, FCMEN (CONFIG1H<6>).

When FSCM is enabled, the INTRC oscillator runs at all times to monitor clocks to peripherals and provide an instant backup clock in the event of a clock failure. Clock monitoring (shown in Figure 23-3) is accomplished by creating a sample clock signal, which is the INTRC output divided by 64. This allows ample time between FSCM sample clocks for a peripheral clock edge to occur. The peripheral system clock and the sample clock are presented as inputs to the Clock Monitor latch (CM). The CM is set on the falling edge of the system clock source but cleared on the rising edge of the sample clock.

FIGURE 23-3: FSCM BLOCK DIAGRAM

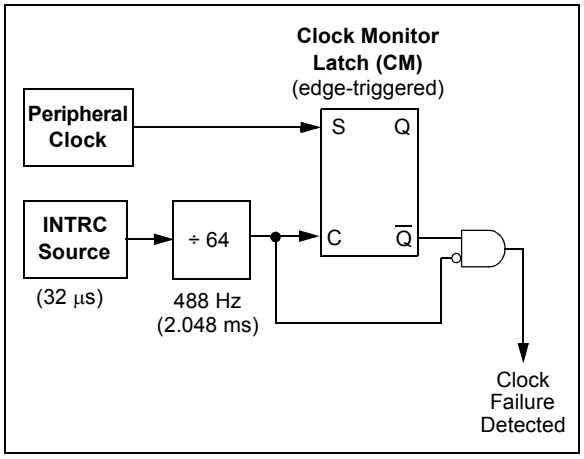

Clock failure is tested on the falling edge of the sample clock. If a sample clock falling edge occurs while CM is still set, a clock failure has been detected (Figure 23-4). This causes the following:

- The FSCM generates an oscillator fail interrupt by setting bit, OSCFIF (PIR2<7>)
- The system clock source is switched to the internal oscillator block (OSCCON is not updated to show the current clock source – this is the fail-safe condition)
- The WDT is reset

Since the postscaler frequency from the internal oscillator block may not be sufficiently stable, it may be desirable to select another clock configuration and enter an alternate power-managed mode (see **Section 23.3.1 "Special Considerations for Using Two-Speed Start-up"** and **Section 3.1.3 "Multiple Sleep Commands"** for more details). This can be done to attempt a partial recovery or execute a controlled shutdown.

To use a higher clock speed on wake-up, the INTOSC or postscaler clock sources can be selected to provide a higher clock speed by setting bits IFRC2:IFRC0 immediately after Reset. For wake-ups from Sleep, the INTOSC or postscaler clock sources can be selected by setting IFRC2:IFRC0 prior to entering Sleep mode.

Adjustments to the internal oscillator block using the OSCTUNE register also affect the period of the FSCM by the same factor. This can usually be neglected, as the clock frequency being monitored is generally much higher than the sample clock frequency.

The FSCM will detect failures of the primary or secondary clock sources only. If the internal oscillator block fails, no failure would be detected, nor would any action be possible.

23.4.1 FSCM AND THE WATCHDOG TIMER

Both the FSCM and the WDT are clocked by the INTRC oscillator. Since the WDT operates with a separate divider and counter, disabling the WDT has no effect on the operation of the INTRC oscillator when the FSCM is enabled.

As already noted, the clock source is switched to the INTOSC clock when a clock failure is detected. Depending on the frequency selected by the IRCF2:IRCF0 bits, this may mean a substantial change in the speed of code execution. If the WDT is enabled with a small prescale value, a decrease in clock speed allows a WDT time-out to occur and a subsequent device Reset. For this reason, fail-safe clock events also reset the WDT and postscaler, allowing it to start timing from when execution speed was changed and decreasing the likelihood of an erroneous time-out.

23.4.2 EXITING FAIL-SAFE OPERATION

The fail-safe condition is terminated by either a device Reset or by entering a power-managed mode. On Reset, the controller starts the primary clock source specified in Configuration Register 1H (with any required start-up delays that are required for the oscillator mode, such as OST or PLL timer). The INTOSC multiplexer provides the system clock until the primary clock source becomes ready (similar to a Two-speed Start-up). The clock system source is then switched to the primary clock (indicated by the OSTS bit in the OSCCON register becoming set). The Fail-Safe Clock Monitor then resumes monitoring the peripheral clock.

The primary clock source may never become ready during start-up. In this case, operation is clocked by the INTOSC multiplexer. The OSCCON register will remain in its Reset state until a power-managed mode is entered.

Entering a power-managed mode by loading the OSCCON register and executing a `SLEEP` instruction will clear the fail-safe condition. When the fail-safe condition is cleared, the clock monitor will resume monitoring the peripheral clock.

FIGURE 23-4: FSCM TIMING DIAGRAM

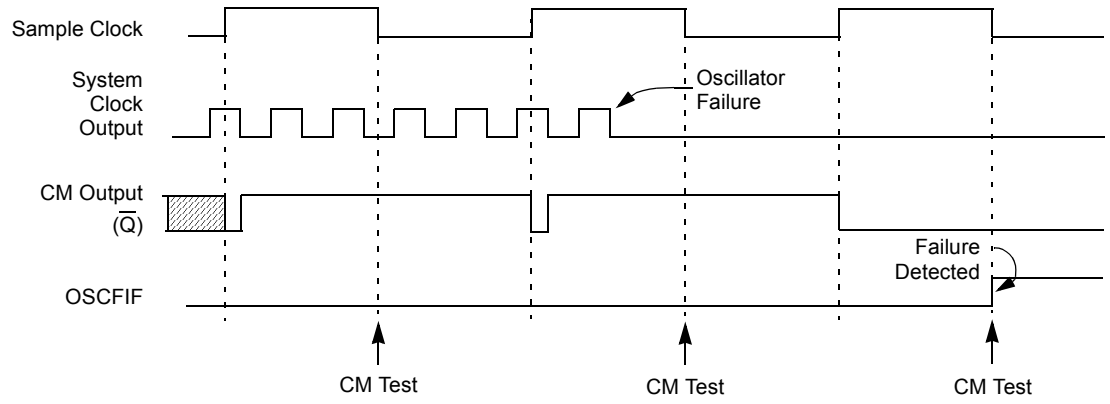

Note: The system clock is normally at a much higher frequency than the sample clock. The relative frequencies in this example have been chosen for clarity.

© 2007 Microchip Technology Inc.

23.4.3 FSCM INTERRUPTS IN POWER-MANAGED MODES

As previously mentioned, entering a power-managed mode clears the fail-safe condition. By entering a power-managed mode, the clock multiplexer selects the clock source selected by the OSCCON register. Fail-safe monitoring of the power-managed clock source resumes in the power-managed mode.

If an oscillator failure occurs during power-managed operation, the subsequent events depend on whether or not the oscillator failure interrupt is enabled. If enabled (OSCFIF = 1), code execution will be clocked by the INTOSC multiplexer. An automatic transition back to the failed clock source will not occur.

If the interrupt is disabled, the device will not exit the power-managed mode on oscillator failure. Instead, the device will continue to operate as before but clocked by the INTOSC multiplexer. While in Idle mode, subsequent interrupts will cause the CPU to begin executing instructions while being clocked by the INTOSC multiplexer. The device will not transition to a different clock source until the fail-safe condition is cleared.

23.4.4 POR OR WAKE FROM SLEEP

The FSCM is designed to detect oscillator failure at any point after the device has exited Power-on Reset (POR) or low-power Sleep mode. When the primary system clock is EC, RC or INTRC modes, monitoring can begin immediately following these events.

For oscillator modes involving a crystal or resonator (HS, HSPLL, LP or XT), the situation is somewhat different. Since the oscillator may require a start-up time considerably longer than the FCSM sample clock time, a false clock failure may be detected. To prevent this, the internal oscillator block is automatically configured as the system clock and functions until the primary clock is stable (the OST and PLL timers have timed out). This is identical to Two-Speed Start-up mode. Once the primary clock is stable, the INTRC returns to its role as the FSCM source.

Note:	The same logic that prevents false oscillator failure interrupts on POR or wake from Sleep will also prevent the detection of the oscillator's failure to start at all following these events. This can be avoided by monitoring the OSTS bit and using a timing routine to determine if the oscillator is taking too long to start. Even so, no oscillator failure interrupt will be flagged.

As noted in **Section 23.3.1 "Special Considerations for Using Two-Speed Start-up"**, it is also possible to select another clock configuration and enter an alternate power-managed mode while waiting for the primary system clock to become stable. When the new powered managed mode is selected, the primary clock is disabled.

23.5 Program Verification and Code Protection

The overall structure of the code protection on the PIC18 Flash devices differs significantly from other PIC® devices.

The user program memory is divided into five blocks. One of these is a boot block of 512 bytes. The remainder of the memory is divided into four blocks on binary boundaries.

Each of the five blocks has three code protection bits associated with them. They are:

- Code-Protect bit (CPn)
- Write-Protect bit (WRTn)
- External Block Table Read bit (EBTRn)

Figure 23-5 shows the program memory organization for 4 and 8-Kbyte devices and the specific code protection bit associated with each block. The actual locations of the bits are summarized in Table 23-3.

FIGURE 23-5: CODE-PROTECTED PROGRAM MEMORY FOR PIC18F2X20/4X20

MEMORY SIZE/DEVICE			
4 Kbytes (PIC18F2220/4220)	8 Kbytes (PIC18F2320/4320)	Address Range	Block Code Protection Controlled By:
Boot Block	Boot Block	000000h 0001FFh	CPB, WRTB, EBTRB
Block 0	Block 0	000200h 0007FFh	CP0, WRT0, EBTR0
Block 1	Block 1	000800h 000FFFh	CP1, WRT1, EBTR1
Unimplemented Read '0's	Block 2	001000h 0017FFh	CP2, WRT2, EBTR2
Unimplemented Read '0's	Block 3	001800h 001FFFh	CP3, WRT3, EBTR3
Unimplemented Read '0's	Unimplemented Read '0's	002000h 1FFFFFh	(Unimplemented Memory Space)

TABLE 23-3: SUMMARY OF CODE PROTECTION REGISTERS

File Name		Bit 7	Bit 6	Bit 5	Bit 4	Bit 3	Bit 2	Bit 1	Bit 0
300008h	CONFIG5L	—	—	—	—	CP3	CP2	CP1	CP0
300009h	CONFIG5H	CPD	CPB	—	—	—	—	—	—
30000Ah	CONFIG6L	—	—	—	—	WRT3	WRT2	WRT1	WRT0
30000Bh	CONFIG6H	WRTD	WRTB	WRTC	—	—	—	—	—
30000Ch	CONFIG7L	—	—	—	—	EBTR3	EBTR2	EBTR1	EBTR0
30000Dh	CONFIG7H	—	EBTRB	—	—	—	—	—	—

Legend: Shaded cells are unimplemented.

© 2007 Microchip Technology Inc.

23.5.1 PROGRAM MEMORY CODE PROTECTION

The program memory may be read to or written from any location using the table read and table write instructions. The Device ID may be read with table reads. The Configuration registers may be read and written with the table read and table write instructions.

In normal execution mode, the CPx bits have no direct effect. CPx bits inhibit external reads and writes. A block of user memory may be protected from table writes if the WRTx Configuration bit is '0'. The EBTRx bits control table reads. For a block of user memory with the EBTRx bit set to '0', a table read instruction that executes from within that block is allowed to read. A table read instruction that executes from a location outside of that block is not allowed to read and will result in reading '0's. Figures 23-6 through 23-8 illustrate table write and table read protection.

Note:	Code protection bits may only be written to a '0' from a '1' state. It is not possible to write a '1' to a bit in the '0' state. Code protection bits are only set to '1' by a full chip erase or block erase function. The full chip erase and block erase functions can only be initiated via ICSP or an external programmer.

FIGURE 23-6: TABLE WRITE (WRTx) DISALLOWED

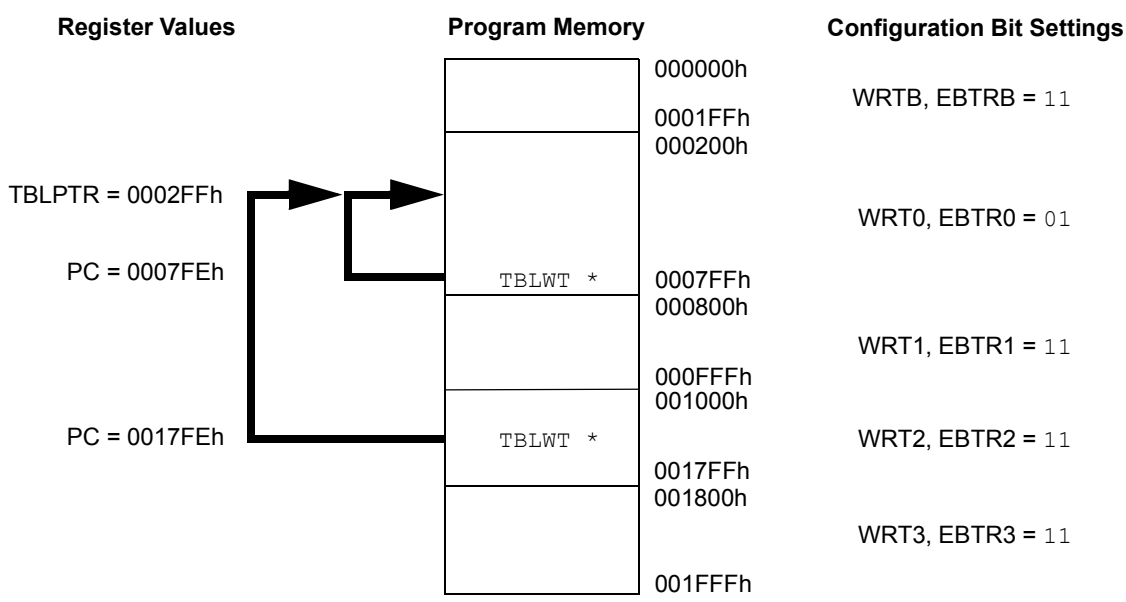

Results: All table writes disabled to Blockn whenever WRTx = 0.

FIGURE 23-7: EXTERNAL BLOCK TABLE READ (EBTRx) DISALLOWED

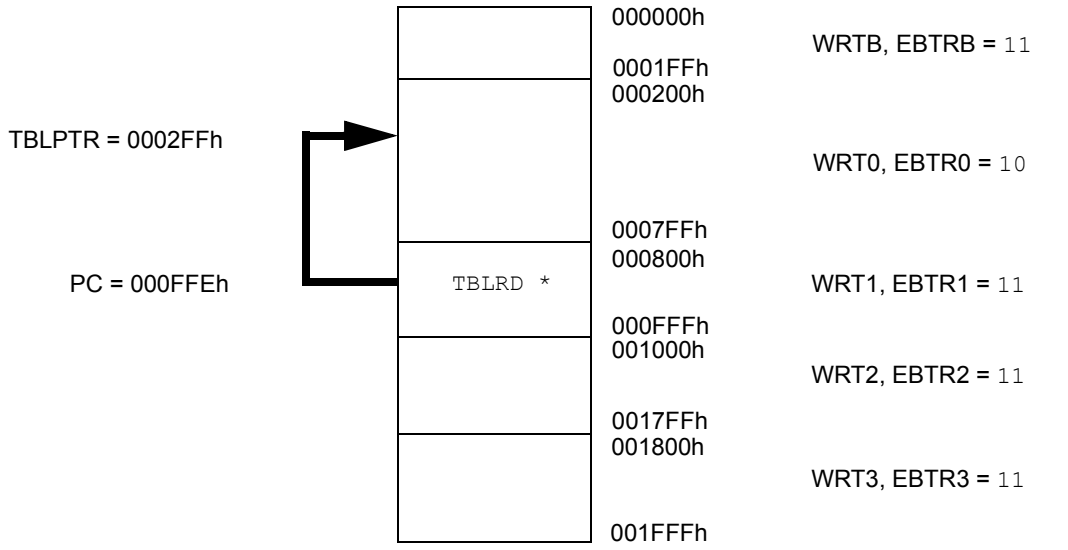

Results: All table reads from external blocks to Blockn are disabled whenever EBTRx = 0.
TABLAT register returns a value of '0'.

FIGURE 23-8: EXTERNAL BLOCK TABLE READ (EBTRx) ALLOWED

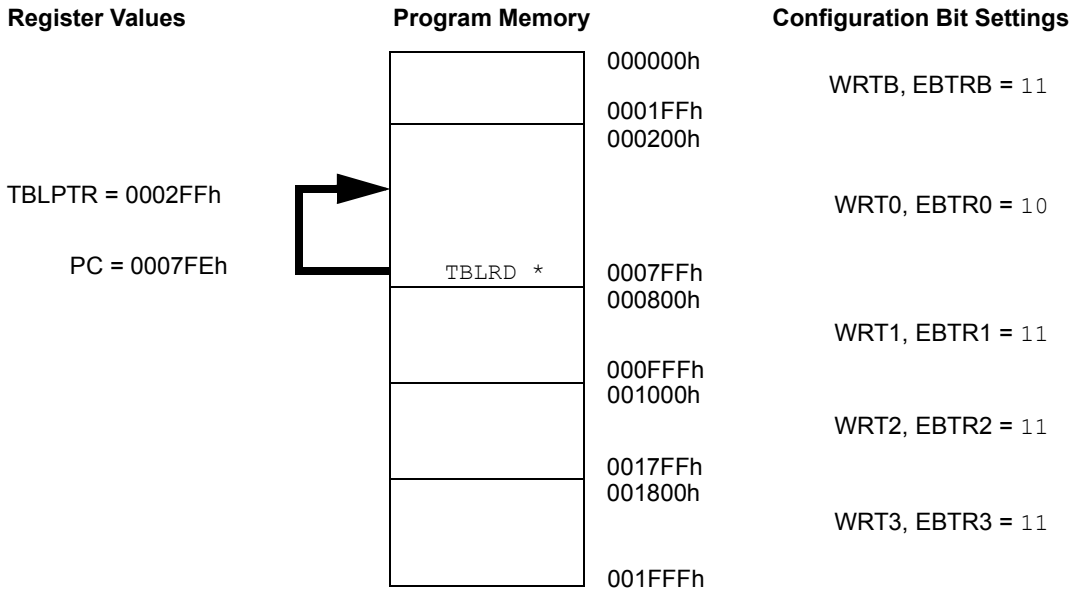

Results: Table reads permitted within Blockn, even when EBTRBx = 0.
TABLAT register returns the value of the data at the location TBLPTR.

© 2007 Microchip Technology Inc.

23.5.2 DATA EEPROM CODE PROTECTION

The entire data EEPROM is protected from external reads and writes by two bits: CPD and WRTD. CPD inhibits external reads and writes of data EEPROM. WRTD inhibits external writes to data EEPROM. The CPU can continue to read and write data EEPROM regardless of the protection bit settings.

23.5.3 CONFIGURATION REGISTER PROTECTION

The Configuration registers can be write-protected. The WRTC bit controls protection of the Configuration registers. In normal execution mode, the WRTC bit is readable only. WRTC can only be written via ICSP or an external programmer.

23.6 ID Locations

Eight memory locations (200000h-200007h) are designated as ID locations, where the user can store checksum or other code identification numbers. These locations are both readable and writable during normal execution through the TBLRD and TBLWT instructions, or during program/verify. The ID locations can be read when the device is code-protected.

23.7 In-Circuit Serial Programming

PIC18F2X20/4X20 microcontrollers can be serially programmed while in the end application circuit. This is simply done with two lines for clock and data and three other lines for power, ground and the programming voltage. This allows customers to manufacture boards with unprogrammed devices and then program the microcontroller just before shipping the product. This also allows the most recent firmware or a custom firmware to be programmed (see Table 23-5).

23.8 In-Circuit Debugger

When the $\overline{\text{DEBUG}}$ bit in Configuration register, CONFIG4L, is programmed to a '0', the In-Circuit Debugger functionality is enabled. This function allows simple debugging functions when used with MPLAB® IDE. When the microcontroller has this feature enabled, some resources are not available for general use. Table 23-4 shows which resources are required by the background debugger.

TABLE 23-4: DEBUGGER RESOURCES

I/O pins:	RB6, RB7
Stack:	2 levels
Program Memory:	512 bytes
Data Memory:	10 bytes

To use the In-Circuit Debugger function of the microcontroller, the design must implement In-Circuit Serial Programming connections to $\overline{\text{MCLR}}$/VPP, VDD, VSS, RB7 and RB6. This will interface to the In-Circuit Debugger module available from Microchip or one of the third party development tool companies.

23.9 Low-Voltage ICSP Programming

The LVP bit in Configuration Register 4L (CONFIG4L<2>) enables Low-Voltage ICSP Programming (LVP). When LVP is enabled, the microcontroller can be programmed without requiring high voltage being applied to the $\overline{\text{MCLR}}$/VPP pin, but the RB5/PGM pin is then dedicated to controlling Program mode entry and is not available as a general purpose I/O pin.

LVP is enabled in erased devices.

While programming using LVP, VDD is applied to the $\overline{\text{MCLR}}$/VPP pin as in normal execution mode. To enter Programming mode, VDD is applied to the PGM pin.

Note 1: High-voltage programming is always available, regardless of the state of the LVP bit or the PGM pin, by applying VIHH to the $\overline{\text{MCLR}}$ pin.

2: When Low-Voltage Programming is enabled, the RB5 pin can no longer be used as a general purpose I/O pin.

3: When LVP is enabled, externally pull the PGM pin to VSS to allow normal program execution.

If Low-Voltage ICSP Programming mode will not be used, the LVP bit can be cleared and RB5/PGM becomes available as the digital I/O pin, RB5. The LVP bit may be set or cleared only when using standard high-voltage programming (VIHH applied to the $\overline{\text{MCLR}}$/VPP pin). Once LVP has been disabled, only the standard high-voltage programming is available and must be used to program the device.

Memory that is not code-protected can be erased using either a block erase, or erased row by row, then written at any specified VDD. If code-protected memory is to be erased, a block erase is required. If a block erase is to be performed when using Low-Voltage Programming, the device must be supplied with VDD of 4.5V to 5.5V.

TABLE 23-5: ICSP™/ICD CONNECTIONS

Signal	Pin	Notes
PGD	RB7	May require isolation from application circuits
PGC	RB6	
$\overline{\text{MCLR}}$	$\overline{\text{MCLR}}$	
VDD	VDD	
VSS	VSS	
PGM	RB5	Pull RB5 low if LVP is enabled

NOTES:

© 2007 Microchip Technology Inc.

24.0 INSTRUCTION SET SUMMARY

The PIC18 instruction set adds many enhancements to the previous PIC MCU instruction sets, while maintaining an easy migration from these PIC MCU instruction sets.

Most instructions are a single program memory word (16 bits) but there are three instructions that require two program memory locations.

Each single-word instruction is a 16-bit word divided into an opcode, which specifies the instruction type and one or more operands, which further specify the operation of the instruction.

The instruction set is highly orthogonal and is grouped into four basic categories:

- **Byte-oriented** operations
- **Bit-oriented** operations
- **Literal** operations
- **Control** operations

The PIC18 instruction set summary in Table 24-2 lists **byte-oriented**, **bit-oriented**, **literal** and **control** operations. Table 24-1 shows the opcode field descriptions.

Most **byte-oriented** instructions have three operands:

1. The file register (specified by ‘f’)
2. The destination of the result (specified by ‘d’)
3. The accessed memory (specified by ‘a’)

The file register designator ‘f’ specifies which file register is to be used by the instruction.

The destination designator ‘d’ specifies where the result of the operation is to be placed. If ‘d’ is zero, the result is placed in the WREG register. If ‘d’ is one, the result is placed in the file register specified in the instruction.

All **bit-oriented** instructions have three operands:

1. The file register (specified by ‘f’)
2. The bit in the file register (specified by ‘b’)
3. The accessed memory (specified by ‘a’)

The bit field designator ‘b’ selects the number of the bit affected by the operation, while the file register designator ‘f’ represents the number of the file in which the bit is located.

The **literal** instructions may use some of the following operands:

- A literal value to be loaded into a file register (specified by ‘k’)
- The desired FSR register to load the literal value into (specified by ‘f’)
- No operand required (specified by ‘—’)

The **control** instructions may use some of the following operands:

- A program memory address (specified by ‘n’)
- The mode of the `CALL` or `RETURN` instructions (specified by ‘s’)
- The mode of the table read and table write instructions (specified by ‘m’)
- No operand required (specified by ‘—’)

All instructions are a single word except for three double word instructions. These three instructions were made double word instructions so that all the required information is available in these 32 bits. In the second word, the 4 MSbs are ‘1’s. If this second word is executed as an instruction (by itself), it will execute as a `NOP`.

All single-word instructions are executed in a single instruction cycle, unless a conditional test is true or the program counter is changed as a result of the instruction. In these cases, the execution takes two instruction cycles with the additional instruction cycle(s) executed as a `NOP`.

The double word instructions execute in two instruction cycles.

One instruction cycle consists of four oscillator periods. Thus, for an oscillator frequency of 4 MHz, the normal instruction execution time is 1 μs. If a conditional test is true, or the program counter is changed as a result of an instruction, the instruction execution time is 2 μs. Two-word branch instructions (if true) would take 3 μs.

Figure 24-1 shows the general formats that the instructions can have.

All examples use the format ‘nnh’ to represent a hexadecimal number, where ‘h’ signifies a hexadecimal digit.

The Instruction Set Summary, shown in Table 24-2, lists the instructions recognized by the Microchip Assembler (MPASM™). **Section 24.2 “Instruction Set”** provides a description of each instruction.

24.1 READ-MODIFY-WRITE OPERATIONS

Any instruction that specifies a file register as part of the instruction performs a Read-Modify-Write (R-M-W) operation. The register is read, the data is modified and the result is stored according to either the instruction or the destination designator ‘d’. A read operation is performed on a register even if the instruction writes to that register.

For example, a “`BCF PORTB,1`” instruction will read PORTB, clear bit 1 of the data, then write the result back to PORTB. The read operation would have the unintended result that any condition that sets the RBIF flag would be cleared. The R-M-W operation may also copy the level of an input pin to its corresponding output latch.

TABLE 24-1: OPCODE FIELD DESCRIPTIONS

Field	Description
a	RAM access bit: a = 0: RAM location in Access RAM (BSR register is ignored) a = 1: RAM bank is specified by BSR register
bbb	Bit address within an 8-bit file register (0 to 7).
BSR	Bank Select Register. Used to select the current RAM bank.
d	Destination select bit: d = 0: store result in WREG d = 1: store result in file register f
dest	Destination either the WREG register or the specified register file location.
f	8-bit register file address (0x00 to 0xFF).
fs	12-bit register file address (0x000 to 0xFFF). This is the source address.
fd	12-bit register file address (0x000 to 0xFFF). This is the destination address.
k	Literal field, constant data or label (may be either an 8-bit, 12-bit or a 20-bit value).
label	Label name.
mm * *+ *- +*	The mode of the TBLPTR register for the table read and table write instructions. Only used with table read and table write instructions: No Change to register (such as TBLPTR with table reads and writes). Post-Increment register (such as TBLPTR with table reads and writes). Post-Decrement register (such as TBLPTR with table reads and writes). Pre-Increment register (such as TBLPTR with table reads and writes).
n	The relative address (2's complement number) for relative branch instructions, or the direct address for Call/Branch and Return instructions.
PRODH	Product of Multiply High Byte.
PRODL	Product of Multiply Low Byte.
s	Fast Call/Return mode select bit: s = 0: do not update into/from shadow registers s = 1: certain registers loaded into/from shadow registers (Fast mode)
u	Unused or Unchanged.
WREG	Working register (accumulator).
x	Don't care ('0' or '1'). The assembler will generate code with x = 0. It is the recommended form of use for compatibility with all Microchip software tools.
TBLPTR	21-bit Table Pointer (points to a Program Memory location).
TABLAT	8-bit Table Latch.
TOS	Top-of-Stack.
PC	Program Counter.
PCL	Program Counter Low Byte.
PCH	Program Counter High Byte.
PCLATH	Program Counter High Byte Latch.
PCLATU	Program Counter Upper Byte Latch.
GIE	Global Interrupt Enable bit.
WDT	Watchdog Timer.
$\overline{TO}$	Time-out bit.
$\overline{PD}$	Power-down bit.
C, DC, Z, OV, N	ALU Status bits: Carry, Digit Carry, Zero, Overflow, Negative.
[ ]	Optional.
( )	Contents.
→	Assigned to.
< >	Register bit field.
∈	In the set of.
italics	User-defined term (font is Courier New).

© 2007 Microchip Technology Inc.

FIGURE 24-1: GENERAL FORMAT FOR INSTRUCTIONS

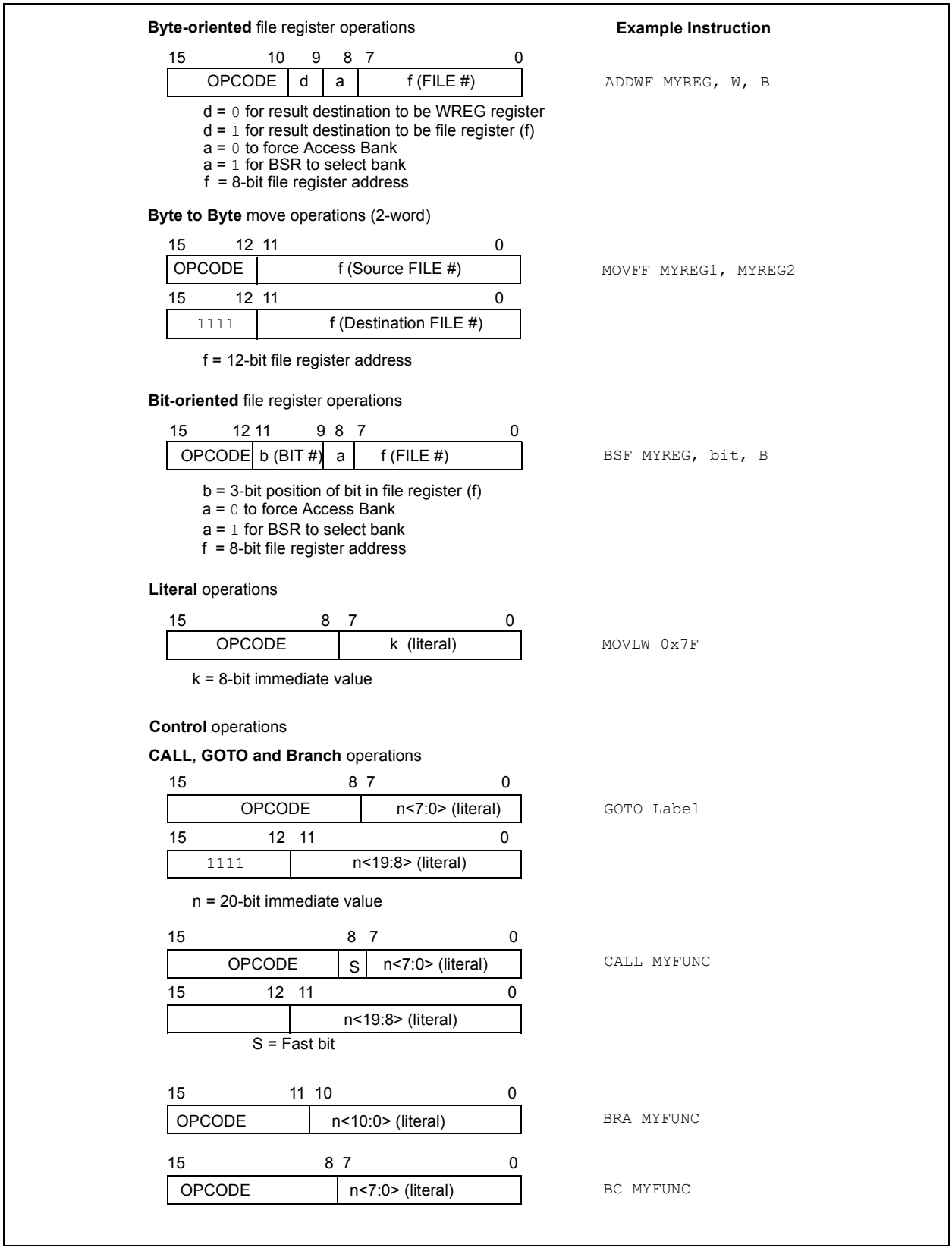

TABLE 24-2: PIC18FXXX INSTRUCTION SET

Mnemonic, Operands		Description	Cycles	16-Bit Instruction Word MSb	LSb	Status Affected	Notes
BYTE-ORIENTED FILE REGISTER OPERATIONS							
ADDWF	f, d, a	Add WREG and f	1	0010 01da	ffff ffff	C, DC, Z, OV, N	1, 2
ADDWFC	f, d, a	Add WREG and Carry bit to f	1	0010 00da	ffff ffff	C, DC, Z, OV, N	1, 2
ANDWF	f, d, a	AND WREG with f	1	0001 01da	ffff ffff	Z, N	1,2
CLRF	f, a	Clear f	1	0110 101a	ffff ffff	Z	2
COMF	f, d, a	Complement f	1	0001 11da	ffff ffff	Z, N	1, 2
CPFSEQ	f, a	Compare f with WREG, Skip =	1 (2 or 3)	0110 001a	ffff ffff	None	4
CPFSGT	f, a	Compare f with WREG, Skip >	1 (2 or 3)	0110 010a	ffff ffff	None	4
CPFSLT	f, a	Compare f with WREG, Skip <	1 (2 or 3)	0110 000a	ffff ffff	None	1, 2
DECF	f, d, a	Decrement f	1	0000 01da	ffff ffff	C, DC, Z, OV, N	1, 2, 3, 4
DECFSZ	f, d, a	Decrement f, Skip if 0	1 (2 or 3)	0010 11da	ffff ffff	None	1, 2, 3, 4
DCFSNZ	f, d, a	Decrement f, Skip if Not 0	1 (2 or 3)	0100 11da	ffff ffff	None	1, 2
INCF	f, d, a	Increment f	1	0010 10da	ffff ffff	C, DC, Z, OV, N	1, 2, 3, 4
INCFSZ	f, d, a	Increment f, Skip if 0	1 (2 or 3)	0011 11da	ffff ffff	None	4
INFSNZ	f, d, a	Increment f, Skip if Not 0	1 (2 or 3)	0100 10da	ffff ffff	None	1, 2
IORWF	f, d, a	Inclusive OR WREG with f	1	0001 00da	ffff ffff	Z, N	1, 2
MOVF	f, d, a	Move f	1	0101 00da	ffff ffff	Z, N	1
MOVFF	f_s, f_d	Move f_s (source) to 1st word f_d (destination) 2nd word	2	1100 ffff 1111 ffff	ffff ffff ffff ffff	None	
MOVWF	f, a	Move WREG to f	1	0110 111a	ffff ffff	None	
MULWF	f, a	Multiply WREG with f	1	0000 001a	ffff ffff	None	
NEGF	f, a	Negate f	1	0110 110a	ffff ffff	C, DC, Z, OV, N	1, 2
RLCF	f, d, a	Rotate Left f through Carry	1	0011 01da	ffff ffff	C, Z, N	
RLNCF	f, d, a	Rotate Left f (No Carry)	1	0100 01da	ffff ffff	Z, N	1, 2
RRCF	f, d, a	Rotate Right f through Carry	1	0011 00da	ffff ffff	C, Z, N	
RRNCF	f, d, a	Rotate Right f (No Carry)	1	0100 00da	ffff ffff	Z, N	
SETF	f, a	Set f	1	0110 100a	ffff ffff	None	
SUBFWB	f, d, a	Subtract f from WREG with Borrow	1	0101 01da	ffff ffff	C, DC, Z, OV, N	1, 2
SUBWF	f, d, a	Subtract WREG from f	1	0101 11da	ffff ffff	C, DC, Z, OV, N	
SUBWFB	f, d, a	Subtract WREG from f with Borrow	1	0101 10da	ffff ffff	C, DC, Z, OV, N	1, 2
SWAPF	f, d, a	Swap Nibbles in f	1	0011 10da	ffff ffff	None	4
TSTFSZ	f, a	Test f, Skip if 0	1 (2 or 3)	0110 011a	ffff ffff	None	1, 2
XORWF	f, d, a	Exclusive OR WREG with f	1	0001 10da	ffff ffff	Z, N	
BIT-ORIENTED FILE REGISTER OPERATIONS							
BCF	f, b, a	Bit Clear f	1	1001 bbba	ffff ffff	None	1, 2
BSF	f, b, a	Bit Set f	1	1000 bbba	ffff ffff	None	1, 2
BTFSC	f, b, a	Bit Test f, Skip if Clear	1 (2 or 3)	1011 bbba	ffff ffff	None	3, 4
BTFSS	f, b, a	Bit Test f, Skip if Set	1 (2 or 3)	1010 bbba	ffff ffff	None	3, 4
BTG	f, d, a	Bit Toggle f	1	0111 bbba	ffff ffff	None	1, 2

Note 1: When a PORT register is modified as a function of itself (e.g., `MOVF PORTB, 1, 0`), the value used will be that value present on the pins themselves. For example, if the data latch is '1' for a pin configured as input and is driven low by an external device, the data will be written back with a '0'.

2: If this instruction is executed on the TMR0 register (and where applicable, d = 1), the prescaler will be cleared if assigned.

3: If Program Counter (PC) is modified or a conditional test is true, the instruction requires two cycles. The second cycle is executed as a NOP.

4: Some instructions are 2-word instructions. The second word of these instructions will be executed as a NOP unless the first word of the instruction retrieves the information embedded in these 16 bits. This ensures that all program memory locations have a valid instruction.

5: If the table write starts the write cycle to internal memory, the write will continue until terminated.

© 2007 Microchip Technology Inc.

TABLE 24-2: PIC18FXXX INSTRUCTION SET (CONTINUED)

Mnemonic, Operands		Description	Cycles	16-Bit Instruction Word MSb LSb	Status Affected	Notes
CONTROL OPERATIONS						
BC	n	Branch if Carry	1 (2)	1110 0010 nnnn nnnn	None	
BN	n	Branch if Negative	1 (2)	1110 0110 nnnn nnnn	None	
BNC	n	Branch if Not Carry	1 (2)	1110 0011 nnnn nnnn	None	
BNN	n	Branch if Not Negative	1 (2)	1110 0111 nnnn nnnn	None	
BNOV	n	Branch if Not Overflow	1 (2)	1110 0101 nnnn nnnn	None	
BNZ	n	Branch if Not Zero	1 (2)	1110 0001 nnnn nnnn	None	
BOV	n	Branch if Overflow	1 (2)	1110 0100 nnnn nnnn	None	
BRA	n	Branch Unconditionally	2	1101 0nnn nnnn nnnn	None	
BZ	n	Branch if Zero	1 (2)	1110 0000 nnnn nnnn	None	
CALL	n, s	Call Subroutine 1st word	2	1110 110s kkkk kkkk	None	
		2nd word		1111 kkkk kkkk kkkk		
CLRWDT	—	Clear Watchdog Timer	1	0000 0000 0000 0100	$\overline{TO}$, $\overline{PD}$	
DAW	—	Decimal Adjust WREG	1	0000 0000 0000 0111	C, DC	
GOTO	n	Go to Address 1st word	2	1110 1111 kkkk kkkk	None	
		2nd word		1111 kkkk kkkk kkkk		
NOP	—	No Operation	1	0000 0000 0000 0000	None	
NOP	—	No Operation **(Note 4)**	1	1111 xxxx xxxx xxxx	None	
POP	—	Pop Top of Return Stack (TOS)	1	0000 0000 0000 0110	None	
PUSH	—	Push Top of Return Stack (TOS)	1	0000 0000 0000 0101	None	
RCALL	n	Relative Call	2	1101 1nnn nnnn nnnn	None	
RESET		Software Device Reset	1	0000 0000 1111 1111	All	
RETFIE	s	Return from Interrupt Enable	2	0000 0000 0001 000s	GIE/GIEH, PEIE/GIEL	
RETLW	k	Return with Literal in WREG	2	0000 1100 kkkk kkkk	None	
RETURN	s	Return from Subroutine	2	0000 0000 0001 001s	None	
SLEEP	—	Go into Standby mode	1	0000 0000 0000 0011	$\overline{TO}$, $\overline{PD}$	

Note 1: When a PORT register is modified as a function of itself (e.g., `MOVF PORTB, 1, 0`), the value used will be that value present on the pins themselves. For example, if the data latch is '1' for a pin configured as input and is driven low by an external device, the data will be written back with a '0'.

2: If this instruction is executed on the TMR0 register (and where applicable, d = 1), the prescaler will be cleared if assigned.

3: If Program Counter (PC) is modified or a conditional test is true, the instruction requires two cycles. The second cycle is executed as a `NOP`.

4: Some instructions are 2-word instructions. The second word of these instructions will be executed as a `NOP` unless the first word of the instruction retrieves the information embedded in these 16 bits. This ensures that all program memory locations have a valid instruction.

5: If the table write starts the write cycle to internal memory, the write will continue until terminated.

TABLE 24-2: PIC18FXXX INSTRUCTION SET (CONTINUED)

Mnemonic, Operands		Description	Cycles	16-Bit Instruction Word MSb LSb	Status Affected	Notes
LITERAL OPERATIONS						
ADDLW	k	Add Literal and WREG	1	0000 1111 kkkk kkkk	C, DC, Z, OV, N	
ANDLW	k	AND Literal with WREG	1	0000 1011 kkkk kkkk	Z, N	
IORLW	k	Inclusive OR Literal with WREG	1	0000 1001 kkkk kkkk	Z, N	
LFSR	f, k	Move Literal (12-bit) 2nd word to FSRx 1st word	2	1110 1110 00ff kkkk 1111 0000 kkkk kkkk	None	
MOVLB	k	Move Literal to BSR<3:0>	1	0000 0001 0000 kkkk	None	
MOVLW	k	Move Literal to WREG	1	0000 1110 kkkk kkkk	None	
MULLW	k	Multiply Literal with WREG	1	0000 1101 kkkk kkkk	None	
RETLW	k	Return with Literal in WREG	2	0000 1100 kkkk kkkk	None	
SUBLW	k	Subtract WREG from Literal	1	0000 1000 kkkk kkkk	C, DC, Z, OV, N	
XORLW	k	Exclusive OR Literal with WREG	1	0000 1010 kkkk kkkk	Z, N	
DATA MEMORY ↔ PROGRAM MEMORY OPERATIONS						
TBLRD*		Table Read	2	0000 0000 0000 1000	None	
TBLRD*+		Table Read with Post-Increment		0000 0000 0000 1001	None	
TBLRD*-		Table Read with Post-Decrement		0000 0000 0000 1010	None	
TBLRD+*		Table Read with Pre-Increment		0000 0000 0000 1011	None	
TBLWT*		Table Write	2 (5)	0000 0000 0000 1100	None	
TBLWT*+		Table Write with Post-Increment		0000 0000 0000 1101	None	
TBLWT*-		Table Write with Post-Decrement		0000 0000 0000 1110	None	
TBLWT+*		Table Write with Pre-Increment		0000 0000 0000 1111	None	

Note 1: When a PORT register is modified as a function of itself (e.g., `MOVF PORTB, 1, 0`), the value used will be that value present on the pins themselves. For example, if the data latch is '1' for a pin configured as input and is driven low by an external device, the data will be written back with a '0'.

2: If this instruction is executed on the TMR0 register (and where applicable, d = 1), the prescaler will be cleared if assigned.

3: If Program Counter (PC) is modified or a conditional test is true, the instruction requires two cycles. The second cycle is executed as a `NOP`.

4: Some instructions are 2-word instructions. The second word of these instructions will be executed as a `NOP` unless the first word of the instruction retrieves the information embedded in these 16 bits. This ensures that all program memory locations have a valid instruction.

5: If the table write starts the write cycle to internal memory, the write will continue until terminated.

© 2007 Microchip Technology Inc.

24.2 Instruction Set

ADDLW **ADD Literal to W**

Syntax: [*label*] ADDLW k

Operands: $0 \le k \le 255$

Operation: $(W) + k \rightarrow W$

Status Affected: N, OV, C, DC, Z

Encoding:

0000	1111	kkkk	kkkk

Description: The contents of W are added to the 8-bit literal 'k' and the result is placed in W.

Words: 1

Cycles: 1

Q Cycle Activity:

Q1	Q2	Q3	Q4
Decode	Read literal 'k'	Process Data	Write to W

Example: `ADDLW 0x15`

Before Instruction
W = 0x10

After Instruction
W = 0x25

ADDWF **ADD W to f**

Syntax: [*label*] ADDWF f [,d [,a]]

Operands: $0 \le f \le 255$
$d \in [0,1]$
$a \in [0,1]$

Operation: $(W) + (f) \rightarrow$ dest

Status Affected: N, OV, C, DC, Z

Encoding:

0010	01da	ffff	ffff

Description: Add W to register 'f'. If 'd' is '0', the result is stored in W. If 'd' is '1', the result is stored back in register 'f' (default). If 'a' is '0', the Access Bank will be selected. If 'a' is '1', the BSR is used.

Words: 1

Cycles: 1

Q Cycle Activity:

Q1	Q2	Q3	Q4
Decode	Read register 'f'	Process Data	Write to destination

Example: `ADDWF REG, W`

Before Instruction
W = 0x17
REG = 0xC2

After Instruction
W = 0xD9
REG = 0xC2

ADDWFC **ADD W and Carry bit to f**

Syntax: [*label*] ADDWFC f [,d [,a]]

Operands: $0 \le f \le 255$
$d \in [0,1]$
$a \in [0,1]$

Operation: (W) + (f) + (C) → dest

Status Affected: N, OV, C, DC, Z

Encoding:

0010	00da	ffff	ffff

Description: Add W, the Carry flag and data memory location 'f'. If 'd' is '0', the result is placed in W. If 'd' is '1', the result is placed in data memory location 'f'. If 'a' is '0', the Access Bank will be selected. If 'a' is '1', the BSR will not be overridden.

Words: 1

Cycles: 1

Q Cycle Activity:

Q1	Q2	Q3	Q4
Decode	Read register 'f'	Process Data	Write to destination

Example: `ADDWFC REG, W`

Before Instruction
Carry bit = 1
REG = 0x02
W = 0x4D

After Instruction
Carry bit = 0
REG = 0x02
W = 0x50

ANDLW **AND Literal with W**

Syntax: [*label*] ANDLW k

Operands: $0 \le k \le 255$

Operation: (W) .AND. k → W

Status Affected: N, Z

Encoding:

0000	1011	kkkk	kkkk

Description: The contents of W are ANDed with the 8-bit literal 'k'. The result is placed in W.

Words: 1

Cycles: 1

Q Cycle Activity:

Q1	Q2	Q3	Q4
Decode	Read literal 'k'	Process Data	Write to W

Example: `ANDLW 0x5F`

Before Instruction
W = 0xA3

After Instruction
W = 0x03

© 2007 Microchip Technology Inc.

ANDWF **AND W with f**

Syntax: [*label*] ANDWF f [,d [,a]]

Operands: $0 \le f \le 255$
$d \in [0,1]$
$a \in [0,1]$

Operation: (W) .AND. (f) → dest

Status Affected: N, Z

Encoding:

0001	01da	ffff	ffff

Description: The contents of W are AND'ed with register 'f'. If 'd' is '0', the result is stored in W. If 'd' is '1', the result is stored back in register 'f' (default). If 'a' is '0', the Access Bank will be selected. If 'a' is '1', the BSR will not be overridden (default).

Words: 1

Cycles: 1

Q Cycle Activity:

Q1	Q2	Q3	Q4
Decode	Read register 'f'	Process Data	Write to destination

Example: `ANDWF REG, W`

Before Instruction
W = 0x17
REG = 0xC2

After Instruction
W = 0x02
REG = 0xC2

BC **Branch if Carry**

Syntax: [*label*] BC n

Operands: $-128 \le n \le 127$

Operation: if Carry bit is '1',
(PC) + 2 + 2n → PC

Status Affected: None

Encoding:

1110	0010	nnnn	nnnn

Description: If the Carry bit is '1', then the program will branch.
The 2's complement number '2n' is added to the PC. Since the PC will have incremented to fetch the next instruction, the new address will be PC + 2 + 2n. This instruction is then a two-cycle instruction.

Words: 1

Cycles: 1(2)

Q Cycle Activity:
If Jump:

Q1	Q2	Q3	Q4
Decode	Read literal 'n'	Process Data	Write to PC
No operation	No operation	No operation	No operation

If No Jump:

Q1	Q2	Q3	Q4
Decode	Read literal 'n'	Process Data	No operation

Example: `HERE BC JUMP`

Before Instruction
PC = address `(HERE)`

After Instruction
If Carry = 1;
PC = address `(JUMP)`
If Carry = 0;
PC = address `(HERE + 2)`

BCF **Bit Clear f**

Syntax: [*label*] BCF f,b[,a]

Operands: $0 \le f \le 255$
$0 \le b \le 7$
$a \in [0,1]$

Operation: $0 \rightarrow f<b>$

Status Affected: None

Encoding:

1001	bbba	ffff	ffff

Description: Bit 'b' in register 'f' is cleared. If 'a' is '0', the Access Bank will be selected, overriding the BSR value. If 'a' = 1, then the bank will be selected as per the BSR value (default).

Words: 1

Cycles: 1

Q Cycle Activity:

Q1	Q2	Q3	Q4
Decode	Read register 'f'	Process Data	Write register 'f'

Example: `BCF FLAG_REG, 7`

Before Instruction
FLAG_REG = 0xC7
After Instruction
FLAG_REG = 0x47

BN **Branch if Negative**

Syntax: [*label*] BN n

Operands: $-128 \le n \le 127$

Operation: if Negative bit is '1',
(PC) + 2 + 2n → PC

Status Affected: None

Encoding:

1110	0110	nnnn	nnnn

Description: If the Negative bit is '1', then the program will branch.
The 2's complement number '2n' is added to the PC. Since the PC will have incremented to fetch the next instruction, the new address will be PC + 2 + 2n. This instruction is then a two-cycle instruction.

Words: 1

Cycles: 1(2)

Q Cycle Activity:
If Jump:

Q1	Q2	Q3	Q4
Decode	Read literal 'n'	Process Data	Write to PC
No operation	No operation	No operation	No operation

If No Jump:

Q1	Q2	Q3	Q4
Decode	Read literal 'n'	Process Data	No operation

Example:
```
HERE    BN   Jump
```

Before Instruction
PC = address (HERE)
After Instruction
If Negative = 1;
PC = address (Jump)
If Negative = 0;
PC = address (HERE + 2)

© 2007 Microchip Technology Inc.

BNC **Branch if Not Carry**

Syntax: [*label*] BNC n

Operands: -128 ≤ n ≤ 127

Operation: if Carry bit is '0',
(PC) + 2 + 2n → PC

Status Affected: None

Encoding:

1110	0011	nnnn	nnnn

Description: If the Carry bit is '0', then the program will branch.
The 2's complement number '2n' is added to the PC. Since the PC will have incremented to fetch the next instruction, the new address will be PC + 2 + 2n. This instruction is then a two-cycle instruction.

Words: 1

Cycles: 1(2)

Q Cycle Activity:
If Jump:

Q1	Q2	Q3	Q4
Decode	Read literal 'n'	Process Data	Write to PC
No operation	No operation	No operation	No operation

If No Jump:

Q1	Q2	Q3	Q4
Decode	Read literal 'n'	Process Data	No operation

Example: `HERE BNC Jump`

Before Instruction
PC = address `(HERE)`
After Instruction
If Carry = 0;
PC = address `(Jump)`
If Carry = 1;
PC = address `(HERE + 2)`

BNN **Branch if Not Negative**

Syntax: [*label*] BNN n

Operands: -128 ≤ n ≤ 127

Operation: if Negative bit is '0',
(PC) + 2 + 2n → PC

Status Affected: None

Encoding:

1110	0111	nnnn	nnnn

Description: If the Negative bit is '0', then the program will branch.
The 2's complement number '2n' is added to the PC. Since the PC will have incremented to fetch the next instruction, the new address will be PC + 2 + 2n. This instruction is then a two-cycle instruction.

Words: 1

Cycles: 1(2)

Q Cycle Activity:
If Jump:

Q1	Q2	Q3	Q4
Decode	Read literal 'n'	Process Data	Write to PC
No operation	No operation	No operation	No operation

If No Jump:

Q1	Q2	Q3	Q4
Decode	Read literal 'n'	Process Data	No operation

Example: `HERE BNN Jump`

Before Instruction
PC = address `(HERE)`
After Instruction
If Negative = 0;
PC = address `(Jump)`
If Negative = 1;
PC = address `(HERE + 2)`

BNOV **Branch if Not Overflow**

Syntax: [*label*] BNOV n

Operands: -128 ≤ n ≤ 127

Operation: if Overflow bit is '0',
(PC) + 2 + 2n → PC

Status Affected: None

Encoding:

1110	0101	nnnn	nnnn

Description: If the Overflow bit is '0', then the program will branch.
The 2's complement number '2n' is added to the PC. Since the PC will have incremented to fetch the next instruction, the new address will be PC + 2 + 2n. This instruction is then a two-cycle instruction.

Words: 1

Cycles: 1(2)

Q Cycle Activity:
If Jump:

Q1	Q2	Q3	Q4
Decode	Read literal 'n'	Process Data	Write to PC
No operation	No operation	No operation	No operation

If No Jump:

Q1	Q2	Q3	Q4
Decode	Read literal 'n'	Process Data	No operation

Example: `HERE BNOV Jump`

Before Instruction
PC = address `(HERE)`
After Instruction
If Overflow = 0;
PC = address `(Jump)`
If Overflow = 1;
PC = address `(HERE + 2)`

BNZ **Branch if Not Zero**

Syntax: [*label*] BNZ n

Operands: -128 ≤ n ≤ 127

Operation: if Zero bit is '0',
(PC) + 2 + 2n → PC

Status Affected: None

Encoding:

1110	0001	nnnn	nnnn

Description: If the Zero bit is '0', then the program will branch.
The 2's complement number '2n' is added to the PC. Since the PC will have incremented to fetch the next instruction, the new address will be PC + 2 + 2n. This instruction is then a two-cycle instruction.

Words: 1

Cycles: 1(2)

Q Cycle Activity:
If Jump:

Q1	Q2	Q3	Q4
Decode	Read literal 'n'	Process Data	Write to PC
No operation	No operation	No operation	No operation

If No Jump:

Q1	Q2	Q3	Q4
Decode	Read literal 'n'	Process Data	No operation

Example: `HERE BNZ Jump`

Before Instruction
PC = address `(HERE)`
After Instruction
If Zero = 0;
PC = address `(Jump)`
If Zero = 1;
PC = address `(HERE + 2)`

© 2007 Microchip Technology Inc.

BRA **Unconditional Branch**

Syntax: [*label*] BRA n

Operands: $-1024 \le n \le 1023$

Operation: $(PC) + 2 + 2n \rightarrow PC$

Status Affected: None

Encoding:

1101	0nnn	nnnn	nnnn

Description: Add the 2's complement number '2n' to the PC. Since the PC will have incremented to fetch the next instruction, the new address will be PC + 2 + 2n. This instruction is a two-cycle instruction.

Words: 1

Cycles: 2

Q Cycle Activity:

Q1	Q2	Q3	Q4
Decode	Read literal 'n'	Process Data	Write to PC
No operation	No operation	No operation	No operation

Example: `HERE BRA Jump`

Before Instruction
PC = address `(HERE)`
After Instruction
PC = address `(Jump)`

BSF **Bit Set f**

Syntax: [*label*] BSF f,b[,a]

Operands: $0 \le f \le 255$
$0 \le b \le 7$
$a \in [0,1]$

Operation: $1 \rightarrow f<b>$

Status Affected: None

Encoding:

1000	bbba	ffff	ffff

Description: Bit 'b' in register 'f' is set. If 'a' is '0', Access Bank will be selected, overriding the BSR value. If 'a' = 1, then the bank will be selected as per the BSR value.

Words: 1

Cycles: 1

Q Cycle Activity:

Q1	Q2	Q3	Q4
Decode	Read register 'f'	Process Data	Write register 'f'

Example: `BSF FLAG_REG, 7`

Before Instruction
FLAG_REG = 0x0A
After Instruction
FLAG_REG = 0x8A

BTFSC **Bit Test File, Skip if Clear**

Syntax: [*label*] BTFSC f,b[,a]

Operands: $0 \le f \le 255$
$0 \le b \le 7$
$a \in [0,1]$

Operation: skip if (f<b>) = 0

Status Affected: None

Encoding:

1011	bbba	ffff	ffff

Description: If bit 'b' in register 'f' is '0', then the next instruction is skipped.
If bit 'b' is '0', then the next instruction fetched during the current instruction execution is discarded and a NOP is executed instead, making this a two-cycle instruction. If 'a' is '0', the Access Bank will be selected, overriding the BSR value. If 'a' = 1, then the bank will be selected as per the BSR value (default).

Words: 1

Cycles: 1(2)
Note: 3 cycles if skip and followed by a 2-word instruction.

Q Cycle Activity:

Q1	Q2	Q3	Q4
Decode	Read register 'f'	Process Data	No operation

If skip:

Q1	Q2	Q3	Q4
No operation	No operation	No operation	No operation

If skip and followed by 2-word instruction:

Q1	Q2	Q3	Q4
No operation	No operation	No operation	No operation
No operation	No operation	No operation	No operation

Example:
```
HERE    BTFSC   FLAG, 1
FALSE   :
TRUE    :
```

Before Instruction
PC = address (HERE)
After Instruction
If FLAG<1> = 0;
PC = address (TRUE)
If FLAG<1> = 1;
PC = address (FALSE)

BTFSS **Bit Test File, Skip if Set**

Syntax: [*label*] BTFSS f,b[,a]

Operands: $0 \le f \le 255$
$0 \le b < 7$
$a \in [0,1]$

Operation: skip if (f<b>) = 1

Status Affected: None

Encoding:

1010	bbba	ffff	ffff

Description: If bit 'b' in register 'f' is '1', then the next instruction is skipped.
If bit 'b' is '1', then the next instruction fetched during the current instruction execution is discarded and a NOP is executed instead, making this a two-cycle instruction. If 'a' is '0', the Access Bank will be selected, overriding the BSR value. If 'a' = 1, then the bank will be selected as per the BSR value (default).

Words: 1

Cycles: 1(2)
Note: 3 cycles if skip and followed by a 2-word instruction.

Q Cycle Activity:

Q1	Q2	Q3	Q4
Decode	Read register 'f'	Process Data	No operation

If skip:

Q1	Q2	Q3	Q4
No operation	No operation	No operation	No operation

If skip and followed by 2-word instruction:

Q1	Q2	Q3	Q4
No operation	No operation	No operation	No operation
No operation	No operation	No operation	No operation

Example:
```
HERE    BTFSS   FLAG, 1
FALSE   :
TRUE    :
```

Before Instruction
PC = address (HERE)
After Instruction
If FLAG<1> = 0;
PC = address (FALSE)
If FLAG<1> = 1;
PC = address (TRUE)

© 2007 Microchip Technology Inc.

BTG **Bit Toggle f**

Syntax: [*label*] BTG f,b[,a]

Operands: $0 \le f \le 255$
$0 \le b < 7$
$a \in [0,1]$

Operation: $(\overline{f<b>}) \rightarrow f<b>$

Status Affected: None

Encoding:

0111	bbba	ffff	ffff

Description: Bit 'b' in data memory location 'f' is inverted. If 'a' is '0', the Access Bank will be selected, overriding the BSR value. If 'a' = 1, then the bank will be selected as per the BSR value (default).

Words: 1

Cycles: 1

Q Cycle Activity:

Q1	Q2	Q3	Q4
Decode	Read register 'f'	Process Data	Write register 'f'

Example: `BTG PORTC, 4`

Before Instruction:
PORTC = 0111 0101 [0x75]
After Instruction:
PORTC = 0110 0101 [0x65]

BOV **Branch if Overflow**

Syntax: [*label*] BOV n

Operands: $-128 \le n \le 127$

Operation: if Overflow bit is '1',
$(PC) + 2 + 2n \rightarrow PC$

Status Affected: None

Encoding:

1110	0100	nnnn	nnnn

Description: If the Overflow bit is '1', then the program will branch.
The 2's complement number '2n' is added to the PC. Since the PC will have incremented to fetch the next instruction, the new address will be PC + 2 + 2n. This instruction is then a two-cycle instruction.

Words: 1

Cycles: 1(2)

Q Cycle Activity:
If Jump:

Q1	Q2	Q3	Q4
Decode	Read literal 'n'	Process Data	Write to PC
No operation	No operation	No operation	No operation

If No Jump:

Q1	Q2	Q3	Q4
Decode	Read literal 'n'	Process Data	No operation

Example:
```
HERE    BOV  JUMP
```
Before Instruction
PC = address (HERE)
After Instruction
If Overflow = 1;
PC = address (JUMP)
If Overflow = 0;
PC = address (HERE + 2)

BZ **Branch if Zero**

Syntax: [*label*] BZ n

Operands: -128 ≤ n ≤ 127

Operation: if Zero bit is '1',
(PC) + 2 + 2n → PC

Status Affected: None

Encoding:

1110	0000	nnnn	nnnn

Description: If the Zero bit is '1', then the program will branch.
The 2's complement number '2n' is added to the PC. Since the PC will have incremented to fetch the next instruction, the new address will be PC + 2 + 2n. This instruction is then a two-cycle instruction.

Words: 1

Cycles: 1(2)

Q Cycle Activity:
If Jump:

Q1	Q2	Q3	Q4
Decode	Read literal 'n'	Process Data	Write to PC
No operation	No operation	No operation	No operation

If No Jump:

Q1	Q2	Q3	Q4
Decode	Read literal 'n'	Process Data	No operation

Example: `HERE BZ Jump`

Before Instruction
PC = address `(HERE)`
After Instruction
If Zero = 1;
PC = address `(Jump)`
If Zero = 0;
PC = address `(HERE + 2)`

CALL **Subroutine Call**

Syntax: [*label*] CALL k [,s]

Operands: 0 ≤ k ≤ 1048575
s ∈ [0,1]

Operation: (PC) + 4 → TOS,
k → PC<20:1>;
if s = 1,
(W) → WS,
(STATUS) → STATUSS,
(BSR) → BSRS

Status Affected: None

Encoding:

1st word (k<7:0>)	1110	110s	$k_7$kkk	kkkk$_0$
2nd word(k<19:8>)	1111	k_{19}kkk	kkkk	kkkk$_8$

Description: Subroutine call of entire 2 Mbyte memory range. First, return address (PC + 4) is pushed onto the return stack. If 's' = 1, the W, STATUS and BSR registers are also pushed into their respective shadow registers, WS, STATUSS and BSRS. If 's' = 0, no update occurs (default). Then, the 20-bit value 'k' is loaded into PC<20:1>. CALL is a two-cycle instruction.

Words: 2

Cycles: 2

Q Cycle Activity:

Q1	Q2	Q3	Q4
Decode	Read literal 'k'<7:0>,	Push PC to stack	Read literal 'k'<19:8>, Write to PC
No operation	No operation	No operation	No operation

Example: `HERE CALL THERE,FAST`

Before Instruction
PC = address `(HERE)`
After Instruction
PC = address `(THERE)`
TOS = address `(HERE + 4)`
WS = W
BSRS = BSR
STATUSS= STATUS

© 2007 Microchip Technology Inc.

CLRF **Clear f**

Syntax: [*label*] CLRF f [,a]

Operands: $0 \le f \le 255$
$a \in [0,1]$

Operation: 000h → f,
1 → Z

Status Affected: Z

Encoding:

0110	101a	ffff	ffff

Description: Clears the contents of the specified register. If 'a' is '0', the Access Bank will be selected, overriding the BSR value. If 'a' = 1, then the bank will be selected as per the BSR value (default).

Words: 1

Cycles: 1

Q Cycle Activity:

Q1	Q2	Q3	Q4
Decode	Read register 'f'	Process Data	Write register 'f'

Example: CLRF FLAG_REG

Before Instruction
FLAG_REG = 0x5A
After Instruction
FLAG_REG = 0x00

CLRWDT **Clear Watchdog Timer**

Syntax: [*label*] CLRWDT

Operands: None

Operation: 000h → WDT,
000h → WDT postscaler,
1 → $\overline{TO}$,
1 → $\overline{PD}$

Status Affected: $\overline{TO}$, $\overline{PD}$

Encoding:

0000	0000	0000	0100

Description: CLRWDT instruction resets the Watchdog Timer. It also resets the postscaler of the WDT. Status bits $\overline{TO}$ and $\overline{PD}$ are set.

Words: 1

Cycles: 1

Q Cycle Activity:

Q1	Q2	Q3	Q4
Decode	No operation	Process Data	No operation

Example: CLRWDT

Before Instruction
WDT Counter = ?
After Instruction
WDT Counter = 0x00
WDT Postscaler = 0
$\overline{TO}$ = 1
$\overline{PD}$ = 1

COMF **Complement f**

Syntax: [*label*] COMF f [,d [,a]]

Operands: $0 \le f \le 255$
$d \in [0,1]$
$a \in [0,1]$

Operation: $(\overline{f}) \rightarrow$ dest

Status Affected: N, Z

Encoding:

0001	11da	ffff	ffff

Description: The contents of register 'f' are complemented. If 'd' is '0', the result is stored in W. If 'd' is '1', the result is stored back in register 'f' (default). If 'a' is '0', the Access Bank will be selected, overriding the BSR value. If 'a' = 1, then the bank will be selected as per the BSR value (default).

Words: 1

Cycles: 1

Q Cycle Activity:

Q1	Q2	Q3	Q4
Decode	Read register 'f'	Process Data	Write to destination

Example: `COMF REG, W`

Before Instruction
REG = 0x13
After Instruction
REG = 0x13
W = 0xEC

CPFSEQ **Compare f with W, Skip if f = W**

Syntax: [*label*] CPFSEQ f [,a]

Operands: $0 \le f \le 255$
$a \in [0,1]$

Operation: (f) – (W),
skip if (f) = (W)
(unsigned comparison)

Status Affected: None

Encoding:

0110	001a	ffff	ffff

Description: Compares the contents of data memory location 'f' to the contents of W by performing an unsigned subtraction.
If 'f' = W, then the fetched instruction is discarded and a NOP is executed instead, making this a two-cycle instruction. If 'a' is '0', the Access Bank will be selected, overriding the BSR value. If 'a' = 1, then the bank will be selected as per the BSR value (default).

Words: 1

Cycles: 1(2)
Note: 3 cycles if skip and followed by a 2-word instruction.

Q Cycle Activity:

Q1	Q2	Q3	Q4
Decode	Read register 'f'	Process Data	No operation

If skip:

Q1	Q2	Q3	Q4
No operation	No operation	No operation	No operation

If skip and followed by 2-word instruction:

Q1	Q2	Q3	Q4
No operation	No operation	No operation	No operation
No operation	No operation	No operation	No operation

Example:
```
HERE    CPFSEQ REG
NEQUAL  :
EQUAL   :
```

Before Instruction
PC Address = HERE
W = ?
REG = ?
After Instruction
If REG = W;
PC = Address (EQUAL)
If REG ≠ W;
PC = Address (NEQUAL)

© 2007 Microchip Technology Inc.

CPFSGT **Compare f with W, Skip if f > W**

Syntax: [*label*] CPFSGT f [,a]

Operands: $0 \le f \le 255$
$a \in [0,1]$

Operation: (f) – (W),
skip if (f) > (W)
(unsigned comparison)

Status Affected: None

Encoding:

0110	010a	ffff	ffff

Description: Compares the contents of data memory location 'f' to the contents of the W by performing an unsigned subtraction.
If the contents of 'f' are greater than the contents of WREG, then the fetched instruction is discarded and a NOP is executed instead, making this a two-cycle instruction. If 'a' is '0', the Access Bank will be selected, overriding the BSR value. If 'a' = 1, then the bank will be selected as per the BSR value (default).

Words: 1

Cycles: 1(2)
Note: 3 cycles if skip and followed by a 2-word instruction.

Q Cycle Activity:

Q1	Q2	Q3	Q4
Decode	Read register 'f'	Process Data	No operation

If skip:

Q1	Q2	Q3	Q4
No operation	No operation	No operation	No operation

If skip and followed by 2-word instruction:

Q1	Q2	Q3	Q4
No operation	No operation	No operation	No operation
No operation	No operation	No operation	No operation

Example:
```
HERE      CPFSGT REG
NGREATER  :
GREATER   :
```
Before Instruction
PC = Address (HERE)
W = ?
After Instruction
If REG > W;
PC = Address (GREATER)
If REG ≤ W;
PC = Address (NGREATER)

CPFSLT **Compare f with W, Skip if f < W**

Syntax: [*label*] CPFSLT f [,a]

Operands: $0 \le f \le 255$
$a \in [0,1]$

Operation: (f) – (W),
skip if (f) < (W)
(unsigned comparison)

Status Affected: None

Encoding:

0110	000a	ffff	ffff

Description: Compares the contents of data memory location 'f' to the contents of W by performing an unsigned subtraction.
If the contents of 'f' are less than the contents of W, then the fetched instruction is discarded and a NOP is executed instead, making this a two-cycle instruction. If 'a' is '0', the Access Bank will be selected. If 'a' is '1', the BSR will not be overridden (default).

Words: 1

Cycles: 1(2)
Note: 3 cycles if skip and followed by a 2-word instruction.

Q Cycle Activity:

Q1	Q2	Q3	Q4
Decode	Read register 'f'	Process Data	No operation

If skip:

Q1	Q2	Q3	Q4
No operation	No operation	No operation	No operation

If skip and followed by 2-word instruction:

Q1	Q2	Q3	Q4
No operation	No operation	No operation	No operation
No operation	No operation	No operation	No operation

Example:
```
HERE    CPFSLT REG
NLESS   :
LESS    :
```
Before Instruction
PC = Address (HERE)
W = ?
After Instruction
If REG < W;
PC = Address (LESS)
If REG ≥ W;
PC = Address (NLESS)

DAW **Decimal Adjust W Register**

Syntax: [*label*] DAW

Operands: None

Operation: If [W<3:0> >9] or [DC = 1] then,
(W<3:0>) + 6 → W<3:0>;
else,
(W<3:0>) → W<3:0>;

If [W<7:4> >9] or [C = 1] then,
(W<7:4>) + 6 → W<7:4>;
else,
(W<7:4>) → W<7:4>

Status Affected: C, DC

Encoding:

0000	0000	0000	0111

Description: DAW adjusts the eight-bit value in W, resulting from the earlier addition of two variables (each in packed BCD format) and produces a correct packed BCD result. The carry bit may be set by DAW regardless of its setting prior to the DAW execution.

Words: 1

Cycles: 1

Q Cycle Activity:

Q1	Q2	Q3	Q4
Decode	Read register W	Process Data	Write W

Example1: DAW

Before Instruction
W = 0xA5
C = 0
DC = 0

After Instruction
W = 0x05
C = 1
DC = 0

Example 2:

Before Instruction
W = 0xCE
C = 0
DC = 0

After Instruction
W = 0x34
C = 1
DC = 0

DECF **Decrement f**

Syntax: [*label*] DECF f [,d [,a]]

Operands: 0 ≤ f ≤ 255
d ∈ [0,1]
a ∈ [0,1]

Operation: (f) – 1 → dest

Status Affected: C, DC, N, OV, Z

Encoding:

0000	01da	ffff	ffff

Description: Decrement register 'f'. If 'd' is '0', the result is stored in W. If 'd' is '1', the result is stored back in register 'f' (default). If 'a' is '0', the Access Bank will be selected, overriding the BSR value. If 'a' = 1, then the bank will be selected as per the BSR value (default).

Words: 1

Cycles: 1

Q Cycle Activity:

Q1	Q2	Q3	Q4
Decode	Read register 'f'	Process Data	Write to destination

Example: DECF CNT,

Before Instruction
CNT = 0x01
Z = 0

After Instruction
CNT = 0x00
Z = 1

© 2007 Microchip Technology Inc.

DECFSZ **Decrement f, Skip if 0**

Syntax: [*label*] DECFSZ f [,d [,a]]

Operands: $0 \le f \le 255$
$d \in [0,1]$
$a \in [0,1]$

Operation: (f) – 1 → dest,
skip if result = 0

Status Affected: None

Encoding:

0010	11da	ffff	ffff

Description: The contents of register 'f' are decremented. If 'd' is '0', the result is placed in W. If 'd' is '1', the result is placed back in register 'f' (default).
If the result is '0', the next instruction which is already fetched is discarded and a NOP is executed instead, making it a two-cycle instruction. If 'a' is '0', the Access Bank will be selected, overriding the BSR value. If 'a' = 1, then the bank will be selected as per the BSR value (default).

Words: 1

Cycles: 1(2)
Note: 3 cycles if skip and followed by a 2-word instruction.

Q Cycle Activity:

Q1	Q2	Q3	Q4
Decode	Read register 'f'	Process Data	Write to destination

If skip:

Q1	Q2	Q3	Q4
No operation	No operation	No operation	No operation

If skip and followed by 2-word instruction:

Q1	Q2	Q3	Q4
No operation	No operation	No operation	No operation
No operation	No operation	No operation	No operation

Example:
```
HERE    DECFSZ  CNT
        GOTO    LOOP
CONTINUE
```

Before Instruction
PC = Address (HERE)

After Instruction
CNT = CNT – 1
If CNT = 0;
PC = Address (CONTINUE)
If CNT ≠ 0;
PC = Address (HERE + 2)

DCFSNZ **Decrement f, Skip if not 0**

Syntax: [*label*] DCFSNZ f [,d [,a]]

Operands: $0 \le f \le 255$
$d \in [0,1]$
$a \in [0,1]$

Operation: (f) – 1 → dest,
skip if result ≠ 0

Status Affected: None

Encoding:

0100	11da	ffff	ffff

Description: The contents of register 'f' are decremented. If 'd' is '0', the result is placed in W. If 'd' is '1', the result is placed back in register 'f' (default).
If the result is not '0', the next instruction which is already fetched is discarded and a NOP is executed instead, making it a two-cycle instruction. If 'a' is '0', the Access Bank will be selected, overriding the BSR value. If 'a' = 1, then the bank will be selected as per the BSR value (default).

Words: 1

Cycles: 1(2)
Note: 3 cycles if skip and followed by a 2-word instruction.

Q Cycle Activity:

Q1	Q2	Q3	Q4
Decode	Read register 'f'	Process Data	Write to destination

If skip:

Q1	Q2	Q3	Q4
No operation	No operation	No operation	No operation

If skip and followed by 2-word instruction:

Q1	Q2	Q3	Q4
No operation	No operation	No operation	No operation
No operation	No operation	No operation	No operation

Example:
```
HERE    DCFSNZ  TEMP
ZERO    :
NZERO   :
```

Before Instruction
TEMP = ?

After Instruction
TEMP = TEMP – 1,
If TEMP = 0;
PC = Address (ZERO)
If TEMP ≠ 0;
PC = Address (NZERO)

GOTO **Unconditional Branch**

Syntax: [*label*] GOTO k

Operands: $0 \le k \le 1048575$

Operation: $k \rightarrow PC<20:1>$

Status Affected: None

Encoding:

1st word (k<7:0>)	1110	1111	k_7kkk	$kkkk_0$
2nd word(k<19:8>)	1111	$k_{19}kkk$	kkkk	$kkkk_8$

Description: GOTO allows an unconditional branch anywhere within entire 2 Mbyte memory range. The 20-bit value 'k' is loaded into PC<20:1>. GOTO is always a two-cycle instruction.

Words: 2

Cycles: 2

Q Cycle Activity:

Q1	Q2	Q3	Q4
Decode	Read literal 'k'<7:0>,	No operation	Read literal 'k'<19:8>, Write to PC
No operation	No operation	No operation	No operation

Example: GOTO THERE

After Instruction
PC = Address (THERE)

INCF **Increment f**

Syntax: [*label*] INCF f [,d [,a]]

Operands: $0 \le f \le 255$
$d \in [0,1]$
$a \in [0,1]$

Operation: (f) + 1 → dest

Status Affected: C, DC, N, OV, Z

Encoding:

0010	10da	ffff	ffff

Description: The contents of register 'f' are incremented. If 'd' is '0', the result is placed in W. If 'd' is '1', the result is placed back in register 'f' (default). If 'a' is '0', the Access Bank will be selected, overriding the BSR value. If 'a' = 1, then the bank will be selected as per the BSR value (default).

Words: 1

Cycles: 1

Q Cycle Activity:

Q1	Q2	Q3	Q4
Decode	Read register 'f'	Process Data	Write to destination

Example: INCF CNT,

Before Instruction
CNT = 0xFF
Z = 0
C = ?
DC = ?

After Instruction
CNT = 0x00
Z = 1
C = 1
DC = 1

© 2007 Microchip Technology Inc.

INCFSZ **Increment f, Skip if 0**

Syntax: [*label*] INCFSZ f [,d [,a]]

Operands: $0 \le f \le 255$
$d \in [0,1]$
$a \in [0,1]$

Operation: (f) + 1 → dest,
skip if result = 0

Status Affected: None

Encoding:

0011	11da	ffff	ffff

Description: The contents of register 'f' are incremented. If 'd' is '0', the result is placed in W. If 'd' is '1', the result is placed back in register 'f' (default).
If the result is '0', the next instruction which is already fetched is discarded and a NOP is executed instead, making it a two-cycle instruction. If 'a' is '0', the Access Bank will be selected, overriding the BSR value. If 'a' = 1, then the bank will be selected as per the BSR value (default).

Words: 1

Cycles: 1(2)
Note: 3 cycles if skip and followed by a 2-word instruction.

Q Cycle Activity:

Q1	Q2	Q3	Q4
Decode	Read register 'f'	Process Data	Write to destination

If skip:

Q1	Q2	Q3	Q4
No operation	No operation	No operation	No operation

If skip and followed by 2-word instruction:

Q1	Q2	Q3	Q4
No operation	No operation	No operation	No operation
No operation	No operation	No operation	No operation

Example:
```
HERE    INCFSZ   CNT
NZERO   :
ZERO    :
```

Before Instruction
PC = Address (HERE)

After Instruction
CNT = CNT + 1
If CNT = 0;
PC = Address (ZERO)
If CNT ≠ 0;
PC = Address (NZERO)

INFSNZ **Increment f, Skip if Not 0**

Syntax: [*label*] INFSNZ f [,d [,a]]

Operands: $0 \le f \le 255$
$d \in [0,1]$
$a \in [0,1]$

Operation: (f) + 1 → dest,
skip if result ≠ 0

Status Affected: None

Encoding:

0100	10da	ffff	ffff

Description: The contents of register 'f' are incremented. If 'd' is '0', the result is placed in W. If 'd' is '1', the result is placed back in register 'f' (default).
If the result is not '0', the next instruction which is already fetched is discarded and a NOP is executed instead, making it a two-cycle instruction. If 'a' is '0', the Access Bank will be selected, overriding the BSR value. If 'a' = 1, then the bank will be selected as per the BSR value (default).

Words: 1

Cycles: 1(2)
Note: 3 cycles if skip and followed by a 2-word instruction.

Q Cycle Activity:

Q1	Q2	Q3	Q4
Decode	Read register 'f'	Process Data	Write to destination

If skip:

Q1	Q2	Q3	Q4
No operation	No operation	No operation	No operation

If skip and followed by 2-word instruction:

Q1	Q2	Q3	Q4
No operation	No operation	No operation	No operation
No operation	No operation	No operation	No operation

Example:
```
HERE    INFSNZ   REG
ZERO
NZERO
```

Before Instruction
PC = Address (HERE)

After Instruction
REG = REG + 1
If REG ≠ 0;
PC = Address (NZERO)
If REG = 0;
PC = Address (ZERO)

© 2007 Microchip Technology Inc.

IORLW **Inclusive OR Literal with W**

Syntax: [*label*] IORLW k

Operands: $0 \le k \le 255$

Operation: (W) .OR. k → W

Status Affected: N, Z

Encoding:

0000	1001	kkkk	kkkk

Description: The contents of W are OR'ed with the eight-bit literal 'k'. The result is placed in W.

Words: 1

Cycles: 1

Q Cycle Activity:

Q1	Q2	Q3	Q4
Decode	Read literal 'k'	Process Data	Write to W

Example: `IORLW 0x35`

Before Instruction
W = 0x9A

After Instruction
W = 0xBF

IORWF **Inclusive OR W with f**

Syntax: [*label*] IORWF f [,d [,a]]

Operands: $0 \le f \le 255$
$d \in [0,1]$
$a \in [0,1]$

Operation: (W) .OR. (f) → dest

Status Affected: N, Z

Encoding:

0001	00da	ffff	ffff

Description: Inclusive OR W with register 'f'. If 'd' is '0', the result is placed in W. If 'd' is '1', the result is placed back in register 'f' (default). If 'a' is '0', the Access Bank will be selected, overriding the BSR value. If 'a' = 1, then the bank will be selected as per the BSR value (default).

Words: 1

Cycles: 1

Q Cycle Activity:

Q1	Q2	Q3	Q4
Decode	Read register 'f'	Process Data	Write to destination

Example: `IORWF RESULT, W`

Before Instruction
RESULT = 0x13
W = 0x91

After Instruction
RESULT = 0x13
W = 0x93

© 2007 Microchip Technology Inc.

LFSR **Load FSR**

Syntax: [*label*] LFSR f,k

Operands: $0 \le f \le 2$
$0 \le k \le 4095$

Operation: $k \rightarrow FSRf$

Status Affected: None

Encoding:

1110 1111	1110 0000	00ff $k_7$kkk	k_{11}kkk kkkk

Description: The 12-bit literal 'k' is loaded into the file select register pointed to by 'f'.

Words: 2

Cycles: 2

Q Cycle Activity:

Q1	Q2	Q3	Q4
Decode	Read literal 'k' MSB	Process Data	Write literal 'k' MSB to FSRfH
Decode	Read literal 'k' LSB	Process Data	Write literal 'k' to FSRfL

Example: `LFSR 2, 0x3AB`

After Instruction
FSR2H = 0x03
FSR2L = 0xAB

MOVF **Move f**

Syntax: [*label*] MOVF f [,d [,a]]

Operands: $0 \le f \le 255$
$d \in [0,1]$
$a \in [0,1]$

Operation: $f \rightarrow dest$

Status Affected: N, Z

Encoding:

0101	00da	ffff	ffff

Description: The contents of register 'f' are moved to a destination dependent upon the status of 'd'. If 'd' is '0', the result is placed in W. If 'd' is '1', the result is placed back in register 'f' (default). Location 'f' can be anywhere in the 256-byte bank. If 'a' is '0', the Access Bank will be selected, overriding the BSR value. If 'a' = 1, then the bank will be selected as per the BSR value (default).

Words: 1

Cycles: 1

Q Cycle Activity:

Q1	Q2	Q3	Q4
Decode	Read register 'f'	Process Data	Write W

Example: `MOVF REG, W`

Before Instruction
REG = 0x22
W = 0xFF

After Instruction
REG = 0x22
W = 0x22

MOVFF **Move f to f**

Syntax: [*label*] MOVFF f_s,f_d

Operands: $0 \le f_s \le 4095$
$0 \le f_d \le 4095$

Operation: $(f_s) \rightarrow f_d$

Status Affected: None

Encoding:

1st word (source)	1100	ffff	ffff	$ffff_s$
2nd word (destin.)	1111	ffff	ffff	$ffff_d$

Description: The contents of source register 'f_s' are moved to destination register 'f_d'. Location of source 'f_s' can be anywhere in the 4096-byte data space (000h to FFFh) and location of destination 'f_d' can also be anywhere from 000h to FFFh. Either source or destination can be W (a useful special situation). MOVFF is particularly useful for transferring a data memory location to a peripheral register (such as the transmit buffer or an I/O port).

The MOVFF instruction cannot use the PCL, TOSU, TOSH or TOSL as the destination register.

The MOVFF instruction should not be used to modify interrupt settings while any interrupt is enabled (see Page 87).

Words: 2

Cycles: 2 (3)

Q Cycle Activity:

Q1	Q2	Q3	Q4
Decode	Read register 'f' (src)	Process Data	No operation
Decode	No operation No dummy read	No operation	Write register 'f' (dest)

Example: MOVFF REG1, REG2

Before Instruction
REG1 = 0x33
REG2 = 0x11

After Instruction
REG1 = 0x33,
REG2 = 0x33

MOVLB **Move Literal to Low Nibble in BSR**

Syntax: [*label*] MOVLB k

Operands: $0 \le k \le 255$

Operation: $k \rightarrow BSR$

Status Affected: None

Encoding:

0000	0001	kkkk	kkkk

Description: The 8-bit literal 'k' is loaded into the Bank Select Register (BSR).

Words: 1

Cycles: 1

Q Cycle Activity:

Q1	Q2	Q3	Q4
Decode	Read literal 'k'	Process Data	Write literal 'k' to BSR

Example: MOVLB 5

Before Instruction
BSR register = 0x02

After Instruction
BSR register = 0x05

© 2007 Microchip Technology Inc.

MOVLW **Move Literal to W**

Syntax: [*label*] MOVLW k

Operands: $0 \le k \le 255$

Operation: $k \rightarrow W$

Status Affected: None

Encoding:

0000	1110	kkkk	kkkk

Description: The eight-bit literal 'k' is loaded into W.

Words: 1

Cycles: 1

Q Cycle Activity:

Q1	Q2	Q3	Q4
Decode	Read literal 'k'	Process Data	Write to W

Example: `MOVLW 0x5A`

After Instruction

W = 0x5A

MOVWF **Move W to f**

Syntax: [*label*] MOVWF f [,a]

Operands: $0 \le f \le 255$
$a \in [0,1]$

Operation: $(W) \rightarrow f$

Status Affected: None

Encoding:

0110	111a	ffff	ffff

Description: Move data from W to register 'f'. Location 'f' can be anywhere in the 256-byte bank. If 'a' is '0', the Access Bank will be selected, overriding the BSR value. If 'a' = 1, then the bank will be selected as per the BSR value (default).

Words: 1

Cycles: 1

Q Cycle Activity:

Q1	Q2	Q3	Q4
Decode	Read register 'f'	Process Data	Write register 'f'

Example: `MOVWF REG`

Before Instruction

W = 0x4F
REG = 0xFF

After Instruction

W = 0x4F
REG = 0x4F

MULLW **Multiply Literal with W**

Syntax: [*label*] MULLW k

Operands: $0 \le k \le 255$

Operation: (W) x k → PRODH:PRODL

Status Affected: None

Encoding:

0000	1101	kkkk	kkkk

Description: An unsigned multiplication is carried out between the contents of W and the 8-bit literal 'k'. The 16-bit result is placed in PRODH:PRODL register pair. PRODH contains the high byte. W is unchanged. None of the Status flags are affected. Note that neither overflow nor carry is possible in this operation. A zero result is possible but not detected.

Words: 1

Cycles: 1

Q Cycle Activity:

Q1	Q2	Q3	Q4
Decode	Read literal 'k'	Process Data	Write registers PRODH: PRODL

Example: `MULLW 0xC4`

Before Instruction

W = 0xE2
PRODH = ?
PRODL = ?

After Instruction

W = 0xE2
PRODH = 0xAD
PRODL = 0x08

MULWF **Multiply W with f**

Syntax: [*label*] MULWF f [,a]

Operands: $0 \le f \le 255$
$a \in [0,1]$

Operation: (W) x (f) → PRODH:PRODL

Status Affected: None

Encoding:

0000	001a	ffff	ffff

Description: An unsigned multiplication is carried out between the contents of W and the register file location 'f'. The 16-bit result is stored in the PRODH:PRODL register pair. PRODH contains the high byte. Both W and 'f' are unchanged. None of the Status flags are affected. Note that neither overflow nor carry is possible in this operation. A zero result is possible but not detected. If 'a' is '0', the Access Bank will be selected, overriding the BSR value. If 'a'= 1, then the bank will be selected as per the BSR value (default).

Words: 1

Cycles: 1

Q Cycle Activity:

Q1	Q2	Q3	Q4
Decode	Read register 'f'	Process Data	Write registers PRODH: PRODL

Example: `MULWF REG`

Before Instruction

W = 0xC4
REG = 0xB5
PRODH = ?
PRODL = ?

After Instruction

W = 0xC4
REG = 0xB5
PRODH = 0x8A
PRODL = 0x94

© 2007 Microchip Technology Inc.

NEGF **Negate f**

Syntax: [*label*] NEGF f [,a]

Operands: $0 \le f \le 255$
$a \in [0,1]$

Operation: $(\overline{f}) + 1 \rightarrow f$

Status Affected: N, OV, C, DC, Z

Encoding:

0110	110a	ffff	ffff

Description: Location 'f' is negated using two's complement. The result is placed in the data memory location 'f'. If 'a' is '0', the Access Bank will be selected, overriding the BSR value. If 'a' = 1, then the bank will be selected as per the BSR value.

Words: 1

Cycles: 1

Q Cycle Activity:

Q1	Q2	Q3	Q4
Decode	Read register 'f'	Process Data	Write register 'f'

Example: `NEGF REG, 1`

Before Instruction
REG = 0011 1010 [0x3A]
After Instruction
REG = 1100 0110 [0xC6]

NOP **No Operation**

Syntax: [*label*] NOP

Operands: None

Operation: No operation

Status Affected: None

Encoding:

0000 1111	0000 xxxx	0000 xxxx	0000 xxxx

Description: No operation.

Words: 1

Cycles: 1

Q Cycle Activity:

Q1	Q2	Q3	Q4
Decode	No operation	No operation	No operation

Example:

None.

POP **Pop Top of Return Stack**

Syntax: [*label*] POP

Operands: None

Operation: (TOS) → bit bucket

Status Affected: None

Encoding:

0000	0000	0000	0110

Description: The TOS value is pulled off the return stack and is discarded. The TOS value then becomes the previous value that was pushed onto the return stack.
This instruction is provided to enable the user to properly manage the return stack to incorporate a software stack.

Words: 1

Cycles: 1

Q Cycle Activity:

Q1	Q2	Q3	Q4
Decode	No operation	POP TOS value	No operation

Example:
```
POP
GOTO    NEW
```
Before Instruction
TOS = 0x0031A2
Stack (1 level down) = 0x014332

After Instruction
TOS = 0x014332
PC = NEW

PUSH **Push Top of Return Stack**

Syntax: [*label*] PUSH

Operands: None

Operation: (PC + 2) → TOS

Status Affected: None

Encoding:

0000	0000	0000	0101

Description: The PC + 2 is pushed onto the top of the return stack. The previous TOS value is pushed down on the stack.
This instruction allows to implement a software stack by modifying TOS, and then push it onto the return stack.

Words: 1

Cycles: 1

Q Cycle Activity:

Q1	Q2	Q3	Q4
Decode	PUSH PC+2 onto return stack	No operation	No operation

Example:
```
PUSH
```
Before Instruction
TOS = 0x00345A
PC = 0x000124

After Instruction
PC = 0x000126
TOS = 0x000126
Stack (1 level down) = 0x00345A

© 2007 Microchip Technology Inc.

RCALL **Relative Call**

Syntax: [*label*] RCALL n

Operands: $-1024 \le n \le 1023$

Operation: $(PC) + 2 \rightarrow TOS$,
$(PC) + 2 + 2n \rightarrow PC$

Status Affected: None

Encoding:

1101	1nnn	nnnn	nnnn

Description: Subroutine call with a jump up to 1K from the current location. First, return address (PC+2) is pushed onto the stack. Then, add the 2's complement number '2n' to the PC. Since the PC will have incremented to fetch the next instruction, the new address will be PC + 2 + 2n. This instruction is a two-cycle instruction.

Words: 1

Cycles: 2

Q Cycle Activity:

Q1	Q2	Q3	Q4
Decode	Read literal 'n' Push PC to stack	Process Data	Write to PC
No operation	No operation	No operation	No operation

Example: `HERE RCALL Jump`

Before Instruction
PC = Address `(HERE)`

After Instruction
PC = Address `(Jump)`
TOS = Address `(HERE + 2)`

RESET **Reset**

Syntax: [*label*] RESET

Operands: None

Operation: Reset all registers and flags that are affected by a $\overline{\text{MCLR}}$ Reset.

Status Affected: All

Encoding:

0000	0000	1111	1111

Description: This instruction provides a way to execute a $\overline{\text{MCLR}}$ Reset in software.

Words: 1

Cycles: 1

Q Cycle Activity:

Q1	Q2	Q3	Q4
Decode	Start reset	No operation	No operation

Example: `RESET`

After Instruction
Registers = Reset Value
Flags* = Reset Value

RETFIE **Return from Interrupt**

Syntax: [*label*] RETFIE [s]

Operands: s ∈ [0,1]

Operation: (TOS) → PC,
1 → GIE/GIEH or PEIE/GIEL;
if s = 1,
(WS) → W,
(STATUSS) → STATUS,
(BSRS) → BSR,
PCLATU, PCLATH are unchanged

Status Affected: GIE/GIEH, PEIE/GIEL.

Encoding:

0000	0000	0001	000s

Description: Return from Interrupt. Stack is popped and Top-of-Stack (TOS) is loaded into the PC. Interrupts are enabled by setting either the high or low-priority global interrupt enable bit. If 's' = 1, the contents of the shadow registers WS, STATUSS and BSRS are loaded into their corresponding registers, W, STATUS and BSR. If 's' = 0, no update of these registers occurs (default).

Words: 1

Cycles: 2

Q Cycle Activity:

Q1	Q2	Q3	Q4
Decode	No operation	No operation	pop PC from stack Set GIEH or GIEL
No operation	No operation	No operation	No operation

Example: `RETFIE 1`

After Interrupt
PC = TOS
W = WS
BSR = BSRS
STATUS = STATUSS
GIE/GIEH, PEIE/GIEL = 1

RETLW **Return Literal to W**

Syntax: [*label*] RETLW k

Operands: 0 ≤ k ≤ 255

Operation: k → W,
(TOS) → PC,
PCLATU, PCLATH are unchanged

Status Affected: None

Encoding:

0000	1100	kkkk	kkkk

Description: W is loaded with the eight-bit literal 'k'. The program counter is loaded from the top of the stack (the return address). The high address latch (PCLATH) remains unchanged.

Words: 1

Cycles: 2

Q Cycle Activity:

Q1	Q2	Q3	Q4
Decode	Read literal 'k'	Process Data	pop PC from stack, Write to W
No operation	No operation	No operation	No operation

Example:

```
    CALL TABLE ; W contains table
               ; offset value
               ; W now has
               ; table value
   :
TABLE
    ADDWF PCL  ; W = offset
    RETLW k0   ; Begin table
    RETLW k1   ;
   :
   :
    RETLW kn   ; End of table
```

Before Instruction
W = 0x07
After Instruction
W = value of kn

© 2007 Microchip Technology Inc.

RETURN **Return from Subroutine**

Syntax: [*label*] RETURN [s]

Operands: s ∈ [0,1]

Operation: (TOS) → PC;
if s = 1,
(WS) → W,
(STATUSS) → STATUS,
(BSRS) → BSR,
PCLATU, PCLATH are unchanged

Status Affected: None

Encoding:

0000	0000	0001	001s

Description: Return from subroutine. The stack is popped and the top of the stack (TOS) is loaded into the program counter. If 's'= 1, the contents of the shadow registers WS, STATUSS and BSRS are loaded into their corresponding registers, W, STATUS and BSR. If 's' = 0, no update of these registers occurs (default).

Words: 1

Cycles: 2

Q Cycle Activity:

Q1	Q2	Q3	Q4
Decode	No operation	Process Data	pop PC from stack
No operation	No operation	No operation	No operation

Example: RETURN

After Interrupt
PC = TOS

RLCF **Rotate Left f through Carry**

Syntax: [*label*] RLCF f [,d [,a]]

Operands: 0 ≤ f ≤ 255
d ∈ [0,1]
a ∈ [0,1]

Operation: (f<n>) → dest<n+1>,
(f<7>) → C,
(C) → dest<0>

Status Affected: C, N, Z

Encoding:

0011	01da	ffff	ffff

Description: The contents of register 'f' are rotated one bit to the left through the Carry Flag. If 'd' is '0', the result is placed in W. If 'd' is '1', the result is stored back in register 'f' (default). If 'a' is '0', the Access Bank will be selected, overriding the BSR value. If 'a' = 1, then the bank will be selected as per the BSR value (default).

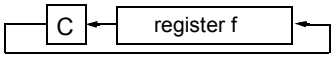

Words: 1

Cycles: 1

Q Cycle Activity:

Q1	Q2	Q3	Q4
Decode	Read register 'f'	Process Data	Write to destination

Example: RLCF REG, W

Before Instruction
REG = 1110 0110
C = 0

After Instruction
REG = 1110 0110
W = 1100 1100
C = 1

RLNCF **Rotate Left f (no carry)**

Syntax: [*label*] RLNCF f [,d [,a]]

Operands: $0 \le f \le 255$
$d \in [0,1]$
$a \in [0,1]$

Operation: (f<n>) → dest<n + 1>,
(f<7>) → dest<0>

Status Affected: N, Z

Encoding:

0100	01da	ffff	ffff

Description: The contents of register 'f' are rotated one bit to the left. If 'd' is '0', the result is placed in W. If 'd' is '1', the result is stored back in register 'f' (default). If 'a' is '0', the Access Bank will be selected, overriding the BSR value. If 'a' is '1', then the bank will be selected as per the BSR value (default).

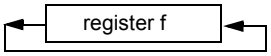

Words: 1

Cycles: 1

Q Cycle Activity:

Q1	Q2	Q3	Q4
Decode	Read register 'f'	Process Data	Write to destination

Example: RLNCF REG

Before Instruction
REG = 1010 1011

After Instruction
REG = 0101 0111

RRCF **Rotate Right f through Carry**

Syntax: [*label*] RRCF f [,d [,a]]

Operands: $0 \le f \le 255$
$d \in [0,1]$
$a \in [0,1]$

Operation: (f<n>) → dest<n – 1>,
(f<0>) → C,
(C) → dest<7>

Status Affected: C, N, Z

Encoding:

0011	00da	ffff	ffff

Description: The contents of register 'f' are rotated one bit to the right through the Carry Flag. If 'd' is '0', the result is placed in W. If 'd' is '1', the result is placed back in register 'f' (default). If 'a' is '0', the Access Bank will be selected, overriding the BSR value. If 'a' is '1', then the bank will be selected as per the BSR value (default).

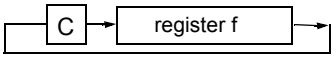

Words: 1

Cycles: 1

Q Cycle Activity:

Q1	Q2	Q3	Q4
Decode	Read register 'f'	Process Data	Write to destination

Example: RRCF REG, W

Before Instruction
REG = 1110 0110
C = 0

After Instruction
REG = 1110 0110
W = 0111 0011
C = 0

© 2007 Microchip Technology Inc.

RRNCF **Rotate Right f (no carry)**

Syntax: [*label*] RRNCF f [,d [,a]]

Operands: $0 \le f \le 255$
$d \in [0,1]$
$a \in [0,1]$

Operation: (f<n>) → dest<n-1>,
(f<0>) → dest<7>

Status Affected: N, Z

Encoding:

0100	00da	ffff	ffff

Description: The contents of register 'f' are rotated one bit to the right. If 'd' is '0', the result is placed in W. If 'd' is '1', the result is placed back in register 'f' (default). If 'a' is '0', the Access Bank will be selected, overriding the BSR value. If 'a' is '1', then the bank will be selected as per the BSR value (default).

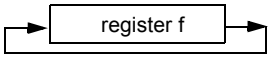

Words: 1

Cycles: 1

Q Cycle Activity:

Q1	Q2	Q3	Q4
Decode	Read register 'f'	Process Data	Write to destination

Example 1:
```
RRNCF   REG, 1, 0
```
Before Instruction
REG = 1101 0111
After Instruction
REG = 1110 1011

Example 2:
```
RRNCF   REG, W
```
Before Instruction
W = ?
REG = 1101 0111
After Instruction
W = 1110 1011
REG = 1101 0111

SETF **Set f**

Syntax: [*label*] SETF f [,a]

Operands: $0 \le f \le 255$
$a \in [0,1]$

Operation: FFh → f

Status Affected: None

Encoding:

0110	100a	ffff	ffff

Description: The contents of the specified register are set to FFh. If 'a' is '0', the Access Bank will be selected, overriding the BSR value. If 'a' is '1', then the bank will be selected as per the BSR value (default).

Words: 1

Cycles: 1

Q Cycle Activity:

Q1	Q2	Q3	Q4
Decode	Read register 'f'	Process Data	Write register 'f'

Example:
```
SETF    REG
```
Before Instruction
REG = 0x5A
After Instruction
REG = 0xFF

SLEEP **Enter Sleep mode**

Syntax: [*label*] SLEEP

Operands: None

Operation: 00h → WDT,
0 → WDT postscaler,
1 → $\overline{TO}$,
0 → $\overline{PD}$

Status Affected: $\overline{TO}$, $\overline{PD}$

Encoding:

0000	0000	0000	0011

Description: The Power-Down status bit ($\overline{PD}$) is cleared. The Time-out status bit ($\overline{TO}$) is set. Watchdog Timer and its postscaler are cleared.
The processor is put into Sleep mode with the oscillator stopped.

Words: 1

Cycles: 1

Q Cycle Activity:

Q1	Q2	Q3	Q4
Decode	No operation	Process Data	Go to Sleep

Example: SLEEP

Before Instruction
$\overline{TO}$ = ?
$\overline{PD}$ = ?

After Instruction
$\overline{TO}$ = 1 †
$\overline{PD}$ = 0

† If WDT causes wake-up, this bit is cleared.

SUBFWB **Subtract f from W with Borrow**

Syntax: [*label*] SUBFWB f [,d [,a]]

Operands: 0 ≤ f ≤ 255
d ∈ [0,1]
a ∈ [0,1]

Operation: (W) – (f) – ($\overline{C}$) → dest

Status Affected: N, OV, C, DC, Z

Encoding:

0101	01da	ffff	ffff

Description: Subtract register 'f' and carry flag (borrow) from W (2's complement method). If 'd' is '0', the result is stored in W. If 'd' is '1', the result is stored in register 'f' (default). If 'a' is '0', the Access Bank will be selected, overriding the BSR value. If 'a' is '1', then the bank will be selected as per the BSR value (default).

Words: 1

Cycles: 1

Q Cycle Activity:

Q1	Q2	Q3	Q4
Decode	Read register 'f'	Process Data	Write to destination

Example 1: SUBFWB REG

Before Instruction
REG = 0x03
W = 0x02
C = 0x01

After Instruction
REG = 0xFF
W = 0x02
C = 0x00
Z = 0x00
N = 0x01 ; result is negative

Example 2: SUBFWB REG, 0, 0

Before Instruction
REG = 2
W = 5
C = 1

After Instruction
REG = 2
W = 3
C = 1
Z = 0
N = 0 ; result is positive

Example 3: SUBFWB REG, 1, 0

Before Instruction
REG = 1
W = 2
C = 0

After Instruction
REG = 0
W = 2
C = 1
Z = 1 ; result is zero
N = 0

© 2007 Microchip Technology Inc.

SUBLW **Subtract W from Literal**

Syntax: [*label*] SUBLW k

Operands: $0 \le k \le 255$

Operation: $k - (W) \rightarrow W$

Status Affected: N, OV, C, DC, Z

Encoding:

0000	1000	kkkk	kkkk

Description: W is subtracted from the eight-bit literal 'k'. The result is placed in W.

Words: 1

Cycles: 1

Q Cycle Activity:

Q1	Q2	Q3	Q4
Decode	Read literal 'k'	Process Data	Write to W

Example 1: `SUBLW 0x02`

Before Instruction
W = 1
C = ?

After Instruction
W = 1
C = 1 ; result is positive
Z = 0
N = 0

Example 2: `SUBLW 0x02`

Before Instruction
W = 2
C = ?

After Instruction
W = 0
C = 1 ; result is zero
Z = 1
N = 0

Example 3: `SUBLW 0x02`

Before Instruction
W = 3
C = ?

After Instruction
W = FF ; (2's complement)
C = 0 ; result is negative
Z = 0
N = 1

SUBWF **Subtract W from f**

Syntax: [*label*] SUBWF f [,d [,a]]

Operands: $0 \le f \le 255$
$d \in [0,1]$
$a \in [0,1]$

Operation: $(f) - (W) \rightarrow dest$

Status Affected: N, OV, C, DC, Z

Encoding:

0101	11da	ffff	ffff

Description: Subtract W from register 'f' (2's complement method). If 'd' is '0', the result is stored in W. If 'd' is '1', the result is stored back in register 'f' (default). If = 'a' is '0', the Access Bank will be selected, overriding the BSR value. If 'a' is '1', then the bank will be selected as per the BSR value (default).

Words: 1

Cycles: 1

Q Cycle Activity:

Q1	Q2	Q3	Q4
Decode	Read register 'f'	Process Data	Write to destination

Example 1: `SUBWF REG`

Before Instruction
REG = 3
W = 2
C = ?

After Instruction
REG = 1
W = 2
C = 1 ; result is positive
Z = 0
N = 0

Example 2: `SUBWF REG, W`

Before Instruction
REG = 2
W = 2
C = ?

After Instruction
REG = 2
W = 0
C = 1 ; result is zero
Z = 1
N = 0

Example 3: `SUBWF REG`

Before Instruction
REG = 0x01
W = 0x02
C = ?

After Instruction
REG = 0xFFh ;(2's complement)
W = 0x02
C = 0x00 ; result is negative
Z = 0x00
N = 0x01

SUBWFB **Subtract W from f with Borrow**

Syntax: [*label*] SUBWFB f [,d [,a]]

Operands: $0 \le f \le 255$
$d \in [0,1]$
$a \in [0,1]$

Operation: (f) – (W) – ($\overline{C}$) → dest

Status Affected: N, OV, C, DC, Z

Encoding:

0101	10da	ffff	ffff

Description: Subtract W and the Carry flag (borrow) from register 'f' (2's complement method). If 'd' is '0', the result is stored in W. If 'd' is '1', the result is stored back in register 'f' (default). If 'a' is '0', the Access Bank will be selected, overriding the BSR value. If 'a' is '1', then the bank will be selected as per the BSR value (default).

Words: 1

Cycles: 1

Q Cycle Activity:

Q1	Q2	Q3	Q4
Decode	Read register 'f'	Process Data	Write to destination

Example 1: `SUBWFB REG, 1, 0`

```
Before Instruction
    REG  =  0x19    (0001 1001)
    W    =  0x0D    (0000 1101)
    C    =  0x01
After Instruction
    REG  =  0x0C    (0000 1011)
    W    =  0x0D    (0000 1101)
    C    =  0x01
    Z    =  0x00
    N    =  0x00    ; result is positive
```

Example 2: `SUBWFB REG, 0, 0`

```
Before Instruction
    REG  =  0x1B    (0001 1011)
    W    =  0x1A    (0001 1010)
    C    =  0x00
After Instruction
    REG  =  0x1B    (0001 1011)
    W    =  0x00
    C    =  0x01
    Z    =  0x01    ; result is zero
    N    =  0x00
```

Example 3: `SUBWFB REG, 1, 0`

```
Before Instruction
    REG  =  0x03    (0000 0011)
    W    =  0x0E    (0000 1101)
    C    =  0x01
After Instruction
    REG  =  0xF5    (1111 0100)
                    ; [2's comp]
    W    =  0x0E    (0000 1101)
    C    =  0x00
    Z    =  0x00
    N    =  0x01    ; result is negative
```


© 2007 Microchip Technology Inc.

SWAPF **Swap f**

Syntax: [*label*] SWAPF f [,d [,a]]

Operands: $0 \le f \le 255$
$d \in [0,1]$
$a \in [0,1]$

Operation: (f<3:0>) → dest<7:4>,
(f<7:4>) → dest<3:0>

Status Affected: None

Encoding:

0011	10da	ffff	ffff

Description: The upper and lower nibbles of register 'f' are exchanged. If 'd' is '0', the result is placed in W. If 'd' is '1', the result is placed in register 'f' (default). If 'a' is '0', the Access Bank will be selected, overriding the BSR value. If 'a' is '1', then the bank will be selected as per the BSR value (default).

Words: 1

Cycles: 1

Q Cycle Activity:

Q1	Q2	Q3	Q4
Decode	Read register 'f'	Process Data	Write to destination

Example: SWAPF REG

Before Instruction
REG = 0x53
After Instruction
REG = 0x35

TBLRD **Table Read**

Syntax: [*label*] TBLRD (*; *+; *-; +*)

Operands: None

Operation: if TBLRD *,
(Prog Mem (TBLPTR)) → TABLAT,
TBLPTR - No Change;
if TBLRD *+,
(Prog Mem (TBLPTR)) → TABLAT,
(TBLPTR) +1 → TBLPTR;
if TBLRD *-,
(Prog Mem (TBLPTR)) → TABLAT,
(TBLPTR) -1 → TBLPTR;
if TBLRD +*,
(TBLPTR) +1 → TBLPTR,
(Prog Mem (TBLPTR)) → TABLAT

Status Affected: None

Encoding:

0000	0000	0000	10nn nn=0 * =1 *+ =2 *- =3 +*

Description: This instruction is used to read the contents of Program Memory (P.M.). To address the program memory, a pointer called Table Pointer (TBLPTR) is used. The TBLPTR (a 21-bit pointer) points to each byte in the program memory. TBLPTR has a 2 Mbyte address range.

TBLPTR[0] = 0: Least Significant Byte of Program Memory Word

TBLPTR[0] = 1: Most Significant Byte of Program Memory Word

The TBLRD instruction can modify the value of TBLPTR as follows:

- no change
- post-increment
- post-decrement
- pre-increment

Words: 1

Cycles: 2

Q Cycle Activity:

Q1	Q2	Q3	Q4
Decode	No operation	No operation	No operation
No operation	No operation (Read Program Memory)	No operation	No operation (Write TABLAT)

TBLRD **Table Read (cont'd)**

Example1:

```
TBLRD  *+ ;
```

Before Instruction

TABLAT	=	0x55
TBLPTR	=	0x00A356
MEMORY(0x00A356)	=	0x34

After Instruction

TABLAT	=	0x34
TBLPTR	=	0x00A357

Example2:

```
TBLRD  +* ;
```

Before Instruction

TABLAT	=	0xAA
TBLPTR	=	0x01A357
MEMORY(0x01A357)	=	0x12
MEMORY(0x01A358)	=	0x34

After Instruction

TABLAT	=	0x34
TBLPTR	=	0x01A358

© 2007 Microchip Technology Inc.

TBLWT **Table Write**

Syntax: [*label*] TBLWT (*; *+; *-; +*)

Operands: None

Operation: if TBLWT*,
(TABLAT) → Holding Register,
TBLPTR - No Change;
if TBLWT*+,
(TABLAT) → Holding Register,
(TBLPTR) +1 → TBLPTR;
if TBLWT*-,
(TABLAT) → Holding Register,
(TBLPTR) -1 → TBLPTR;
if TBLWT+*,
(TBLPTR) +1 → TBLPTR,
(TABLAT) → Holding Register

Status Affected: None

Encoding:

0000	0000	0000	11nn nn=0 * =1 *+ =2 *- =3 +*

Description: This instruction uses the 3 LSBs of TBLPTR to determine which of the 8 holding registers the TABLAT is written to. The holding registers are used to program the contents of Program Memory (P.M.). (Refer to **Section 6.0 "Flash Program Memory"** for additional details on programming Flash memory.)
The TBLPTR (a 21-bit pointer) points to each byte in the program memory. TBLPTR has a 2 MByte address range. The LSb of the TBLPTR selects which byte of the program memory location to access.

TBLPTR[0] = 0: Least Significant Byte of Program Memory Word

TBLPTR[0] = 1: Most Significant Byte of Program Memory Word

The TBLWT instruction can modify the value of TBLPTR as follows:

- no change
- post-increment
- post-decrement
- pre-increment

TBLWT Table Write (Continued)

Words: 1

Cycles: 2

Q Cycle Activity:

Q1	Q2	Q3	Q4
Decode	No operation	No operation	No operation
No operation	No operation (Read TABLAT)	No operation	No operation (Write to Holding Register)

Example1: `TBLWT *+;`

Before Instruction
TABLAT = 0x55
TBLPTR = 0x00A356
HOLDING REGISTER (0x00A356) = 0xFF

After Instructions (table write completion)
TABLAT = 0x55
TBLPTR = 0x00A357
HOLDING REGISTER (0x00A356) = 0x55

Example 2: `TBLWT +*;`

Before Instruction
TABLAT = 0x34
TBLPTR = 0x01389A
HOLDING REGISTER (0x01389A) = 0xFF
HOLDING REGISTER (0x01389B) = 0xFF

After Instruction (table write completion)
TABLAT = 0x34
TBLPTR = 0x01389B
HOLDING REGISTER (0x01389A) = 0xFF
HOLDING REGISTER (0x01389B) = 0x34

TSTFSZ **Test f, Skip if 0**

Syntax: [*label*] TSTFSZ f [,a]

Operands: $0 \le f \le 255$
$a \in [0,1]$

Operation: skip if f = 0

Status Affected: None

Encoding:

0110	011a	ffff	ffff

Description: If 'f' = 0, the next instruction, fetched during the current instruction execution is discarded and a NOP is executed, making this a two-cycle instruction. If 'a' is '0', the Access Bank will be selected, overriding the BSR value. If 'a' is '1', then the bank will be selected as per the BSR value (default).

Words: 1

Cycles: 1(2)
Note: 3 cycles if skip and followed by a 2-word instruction.

Q Cycle Activity:

Q1	Q2	Q3	Q4
Decode	Read register 'f'	Process Data	No operation

If skip:

Q1	Q2	Q3	Q4
No operation	No operation	No operation	No operation

If skip and followed by 2-word instruction:

Q1	Q2	Q3	Q4
No operation	No operation	No operation	No operation
No operation	No operation	No operation	No operation

Example:
```
HERE    TSTFSZ  CNT
NZERO     :
ZERO    :
```

Before Instruction
PC = Address (HERE)

After Instruction
If CNT = 0x00,
PC = Address (ZERO)
If CNT ≠ 0x00,
PC = Address (NZERO)

XORLW **Exclusive OR Literal with W**

Syntax: [*label*] XORLW k

Operands: $0 \le k \le 255$

Operation: (W) .XOR. k → W

Status Affected: N, Z

Encoding:

0000	1010	kkkk	kkkk

Description: The contents of W are XOR'ed with the 8-bit literal 'k'. The result is placed in W.

Words: 1

Cycles: 1

Q Cycle Activity:

Q1	Q2	Q3	Q4
Decode	Read literal 'k'	Process Data	Write to W

Example:
```
XORLW 0xAF
```

Before Instruction
W = 0xB5

After Instruction
W = 0x1A

© 2007 Microchip Technology Inc.

XORWF **Exclusive OR W with f**

Syntax: [*label*] XORWF f [,d [,a]]

Operands: $0 \le f \le 255$
$d \in [0,1]$
$a \in [0,1]$

Operation: (W) .XOR. (f) → dest

Status Affected: N, Z

Encoding:

0001	10da	ffff	ffff

Description: Exclusive OR the contents of W with register 'f'. If 'd' is '0', the result is stored in W. If 'd' is '1', the result is stored back in the register 'f' (default). If 'a' is '0', the Access Bank will be selected, overriding the BSR value. If 'a' is '1', then the bank will be selected as per the BSR value (default).

Words: 1

Cycles: 1

Q Cycle Activity:

Q1	Q2	Q3	Q4
Decode	Read register 'f'	Process Data	Write to destination

Example: XORWF REG

Before Instruction
REG = 0xAF
W = 0xB5

After Instruction
REG = 0x1A
W = 0xB5

NOTES:

© 2007 Microchip Technology Inc.

25.0 DEVELOPMENT SUPPORT

The PIC® microcontrollers are supported with a full range of hardware and software development tools:

- Integrated Development Environment
  - MPLAB® IDE Software
- Assemblers/Compilers/Linkers
  - MPASM™ Assembler
  - MPLAB C18 and MPLAB C30 C Compilers
  - MPLINK™ Object Linker/ MPLIB™ Object Librarian
  - MPLAB ASM30 Assembler/Linker/Library
- Simulators
  - MPLAB SIM Software Simulator
- Emulators
  - MPLAB ICE 2000 In-Circuit Emulator
  - MPLAB REAL ICE™ In-Circuit Emulator
- In-Circuit Debugger
  - MPLAB ICD 2
- Device Programmers
  - PICSTART® Plus Development Programmer
  - MPLAB PM3 Device Programmer
  - PICkit™ 2 Development Programmer
- Low-Cost Demonstration and Development Boards and Evaluation Kits

25.1 MPLAB Integrated Development Environment Software

The MPLAB IDE software brings an ease of software development previously unseen in the 8/16-bit microcontroller market. The MPLAB IDE is a Windows® operating system-based application that contains:

- A single graphical interface to all debugging tools
  - Simulator
  - Programmer (sold separately)
  - Emulator (sold separately)
  - In-Circuit Debugger (sold separately)
- A full-featured editor with color-coded context
- A multiple project manager
- Customizable data windows with direct edit of contents
- High-level source code debugging
- Visual device initializer for easy register initialization
- Mouse over variable inspection
- Drag and drop variables from source to watch windows
- Extensive on-line help
- Integration of select third party tools, such as HI-TECH Software C Compilers and IAR C Compilers

The MPLAB IDE allows you to:

- Edit your source files (either assembly or C)
- One touch assemble (or compile) and download to PIC MCU emulator and simulator tools (automatically updates all project information)
- Debug using:
  - Source files (assembly or C)
  - Mixed assembly and C
  - Machine code

MPLAB IDE supports multiple debugging tools in a single development paradigm, from the cost-effective simulators, through low-cost in-circuit debuggers, to full-featured emulators. This eliminates the learning curve when upgrading to tools with increased flexibility and power.

25.2 MPASM Assembler

The MPASM Assembler is a full-featured, universal macro assembler for all PIC MCUs.

The MPASM Assembler generates relocatable object files for the MPLINK Object Linker, Intel® standard HEX files, MAP files to detail memory usage and symbol reference, absolute LST files that contain source lines and generated machine code and COFF files for debugging.

The MPASM Assembler features include:

- Integration into MPLAB IDE projects
- User-defined macros to streamline assembly code
- Conditional assembly for multi-purpose source files
- Directives that allow complete control over the assembly process

25.3 MPLAB C18 and MPLAB C30 C Compilers

The MPLAB C18 and MPLAB C30 Code Development Systems are complete ANSI C compilers for Microchip's PIC18 and PIC24 families of microcontrollers and the dsPIC30 and dsPIC33 family of digital signal controllers. These compilers provide powerful integration capabilities, superior code optimization and ease of use not found with other compilers.

For easy source level debugging, the compilers provide symbol information that is optimized to the MPLAB IDE debugger.

25.4 MPLINK Object Linker/ MPLIB Object Librarian

The MPLINK Object Linker combines relocatable objects created by the MPASM Assembler and the MPLAB C18 C Compiler. It can link relocatable objects from precompiled libraries, using directives from a linker script.

The MPLIB Object Librarian manages the creation and modification of library files of precompiled code. When a routine from a library is called from a source file, only the modules that contain that routine will be linked in with the application. This allows large libraries to be used efficiently in many different applications.

The object linker/library features include:

- Efficient linking of single libraries instead of many smaller files
- Enhanced code maintainability by grouping related modules together
- Flexible creation of libraries with easy module listing, replacement, deletion and extraction

25.5 MPLAB ASM30 Assembler, Linker and Librarian

MPLAB ASM30 Assembler produces relocatable machine code from symbolic assembly language for dsPIC30F devices. MPLAB C30 C Compiler uses the assembler to produce its object file. The assembler generates relocatable object files that can then be archived or linked with other relocatable object files and archives to create an executable file. Notable features of the assembler include:

- Support for the entire dsPIC30F instruction set
- Support for fixed-point and floating-point data
- Command line interface
- Rich directive set
- Flexible macro language
- MPLAB IDE compatibility

25.6 MPLAB SIM Software Simulator

The MPLAB SIM Software Simulator allows code development in a PC-hosted environment by simulating the PIC MCUs and dsPIC® DSCs on an instruction level. On any given instruction, the data areas can be examined or modified and stimuli can be applied from a comprehensive stimulus controller. Registers can be logged to files for further run-time analysis. The trace buffer and logic analyzer display extend the power of the simulator to record and track program execution, actions on I/O, most peripherals and internal registers.

The MPLAB SIM Software Simulator fully supports symbolic debugging using the MPLAB C18 and MPLAB C30 C Compilers, and the MPASM and MPLAB ASM30 Assemblers. The software simulator offers the flexibility to develop and debug code outside of the hardware laboratory environment, making it an excellent, economical software development tool.

© 2007 Microchip Technology Inc.

25.7 MPLAB ICE 2000 High-Performance In-Circuit Emulator

The MPLAB ICE 2000 In-Circuit Emulator is intended to provide the product development engineer with a complete microcontroller design tool set for PIC microcontrollers. Software control of the MPLAB ICE 2000 In-Circuit Emulator is advanced by the MPLAB Integrated Development Environment, which allows editing, building, downloading and source debugging from a single environment.

The MPLAB ICE 2000 is a full-featured emulator system with enhanced trace, trigger and data monitoring features. Interchangeable processor modules allow the system to be easily reconfigured for emulation of different processors. The architecture of the MPLAB ICE 2000 In-Circuit Emulator allows expansion to support new PIC microcontrollers.

The MPLAB ICE 2000 In-Circuit Emulator system has been designed as a real-time emulation system with advanced features that are typically found on more expensive development tools. The PC platform and Microsoft® Windows® 32-bit operating system were chosen to best make these features available in a simple, unified application.

25.8 MPLAB REAL ICE In-Circuit Emulator System

MPLAB REAL ICE In-Circuit Emulator System is Microchip's next generation high-speed emulator for Microchip Flash DSC and MCU devices. It debugs and programs PIC® Flash MCUs and dsPIC® Flash DSCs with the easy-to-use, powerful graphical user interface of the MPLAB Integrated Development Environment (IDE), included with each kit.

The MPLAB REAL ICE probe is connected to the design engineer's PC using a high-speed USB 2.0 interface and is connected to the target with either a connector compatible with the popular MPLAB ICD 2 system (RJ11) or with the new high-speed, noise tolerant, Low-Voltage Differential Signal (LVDS) interconnection (CAT5).

MPLAB REAL ICE is field upgradeable through future firmware downloads in MPLAB IDE. In upcoming releases of MPLAB IDE, new devices will be supported, and new features will be added, such as software breakpoints and assembly code trace. MPLAB REAL ICE offers significant advantages over competitive emulators including low-cost, full-speed emulation, real-time variable watches, trace analysis, complex breakpoints, a ruggedized probe interface and long (up to three meters) interconnection cables.

25.9 MPLAB ICD 2 In-Circuit Debugger

Microchip's In-Circuit Debugger, MPLAB ICD 2, is a powerful, low-cost, run-time development tool, connecting to the host PC via an RS-232 or high-speed USB interface. This tool is based on the Flash PIC MCUs and can be used to develop for these and other PIC MCUs and dsPIC DSCs. The MPLAB ICD 2 utilizes the in-circuit debugging capability built into the Flash devices. This feature, along with Microchip's In-Circuit Serial Programming™ (ICSP™) protocol, offers cost-effective, in-circuit Flash debugging from the graphical user interface of the MPLAB Integrated Development Environment. This enables a designer to develop and debug source code by setting breakpoints, single stepping and watching variables, and CPU status and peripheral registers. Running at full speed enables testing hardware and applications in real time. MPLAB ICD 2 also serves as a development programmer for selected PIC devices.

25.10 MPLAB PM3 Device Programmer

The MPLAB PM3 Device Programmer is a universal, CE compliant device programmer with programmable voltage verification at V_{DDMIN} and V_{DDMAX} for maximum reliability. It features a large LCD display (128 x 64) for menus and error messages and a modular, detachable socket assembly to support various package types. The ICSP™ cable assembly is included as a standard item. In Stand-Alone mode, the MPLAB PM3 Device Programmer can read, verify and program PIC devices without a PC connection. It can also set code protection in this mode. The MPLAB PM3 connects to the host PC via an RS-232 or USB cable. The MPLAB PM3 has high-speed communications and optimized algorithms for quick programming of large memory devices and incorporates an SD/MMC card for file storage and secure data applications.

25.11 PICSTART Plus Development Programmer

The PICSTART Plus Development Programmer is an easy-to-use, low-cost, prototype programmer. It connects to the PC via a COM (RS-232) port. MPLAB Integrated Development Environment software makes using the programmer simple and efficient. The PICSTART Plus Development Programmer supports most PIC devices in DIP packages up to 40 pins. Larger pin count devices, such as the PIC16C92X and PIC17C76X, may be supported with an adapter socket. The PICSTART Plus Development Programmer is CE compliant.

25.12 PICkit 2 Development Programmer

The PICkit™ 2 Development Programmer is a low-cost programmer and selected Flash device debugger with an easy-to-use interface for programming many of Microchip's baseline, mid-range and PIC18F families of Flash memory microcontrollers. The PICkit 2 Starter Kit includes a prototyping development board, twelve sequential lessons, software and HI-TECH's PICC™ Lite C compiler, and is designed to help get up to speed quickly using PIC® microcontrollers. The kit provides everything needed to program, evaluate and develop applications using Microchip's powerful, mid-range Flash memory family of microcontrollers.

25.13 Demonstration, Development and Evaluation Boards

A wide variety of demonstration, development and evaluation boards for various PIC MCUs and dsPIC DSCs allows quick application development on fully functional systems. Most boards include prototyping areas for adding custom circuitry and provide application firmware and source code for examination and modification.

The boards support a variety of features, including LEDs, temperature sensors, switches, speakers, RS-232 interfaces, LCD displays, potentiometers and additional EEPROM memory.

The demonstration and development boards can be used in teaching environments, for prototyping custom circuits and for learning about various microcontroller applications.

In addition to the PICDEM™ and dsPICDEM™ demonstration/development board series of circuits, Microchip has a line of evaluation kits and demonstration software for analog filter design, KEELOQ® security ICs, CAN, IrDA®, PowerSmart battery management, SEEVAL® evaluation system, Sigma-Delta ADC, flow rate sensing, plus many more.

Check the Microchip web page (www.microchip.com) for the complete list of demonstration, development and evaluation kits.

© 2007 Microchip Technology Inc.

26.0 ELECTRICAL CHARACTERISTICS

Absolute Maximum Ratings (†)

Ambient temperature under bias ..... -55°C to +125°C
Storage temperature ..... -65°C to +150°C
Voltage on any pin with respect to V_{SS} (except V_{DD}, $\overline{MCLR}$ and RA4) ..... -0.3V to (V_{DD} + 0.3V)
Voltage on V_{DD} with respect to V_{SS} ..... -0.3V to +7.5V
Voltage on $\overline{MCLR}$ with respect to V_{SS} **(Note 2)** ..... 0V to +13.25V
Voltage on RA4 with respect to V_{SS} ..... 0V to +8.5V
Total power dissipation **(Note 1)** 1.0W
Maximum current out of V_{SS} pin ..... 300 mA
Maximum current into V_{DD} pin ..... 250 mA
Input clamp current, I_{IK} (V_I < 0 or V_I > V_{DD}) ..... ±20 mA
Output clamp current, I_{OK} (V_O < 0 or V_O > V_{DD}) ..... ±20 mA
Maximum output current sunk by any I/O pin ..... 25 mA
Maximum output current sourced by any I/O pin ..... 25 mA
Maximum current sunk by all ports ..... 200 mA
Maximum current sourced by all ports ..... 200 mA

Note 1: Power dissipation is calculated as follows:
$P_{dis} = V_{DD} \times \{I_{DD} - \sum I_{OH}\} + \sum \{(V_{DD}-V_{OH}) \times I_{OH}\} + \sum(V_{ol} \times I_{OL})$

2: Voltage spikes below V_{SS} at the $\overline{MCLR}/V_{PP}$ pin, inducing currents greater than 80 mA, may cause latch-up. Thus, a series resistor of 50-100Ω should be used when applying a "low" level to the $\overline{MCLR}/V_{PP}$ pin, rather than pulling this pin directly to V_{SS}.

† NOTICE: Stresses above those listed under "Absolute Maximum Ratings" may cause permanent damage to the device. This is a stress rating only and functional operation of the device at those or any other conditions above those indicated in the operation listings of this specification is not implied. Exposure to maximum rating conditions for extended periods may affect device reliability.

FIGURE 26-1: PIC18F2220/2320/4220/4320 VOLTAGE-FREQUENCY GRAPH (INDUSTRIAL)

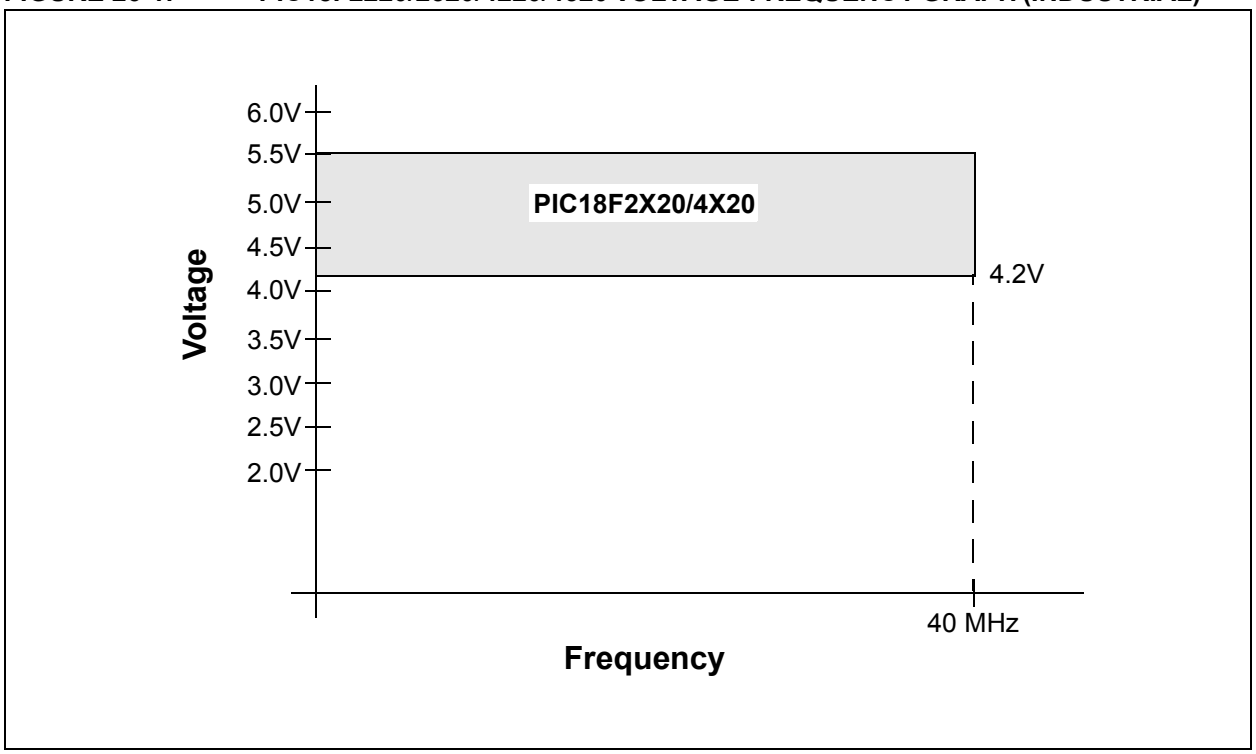

FIGURE 26-2: PIC18F2220/2320/4220/4320 VOLTAGE-FREQUENCY GRAPH (EXTENDED)

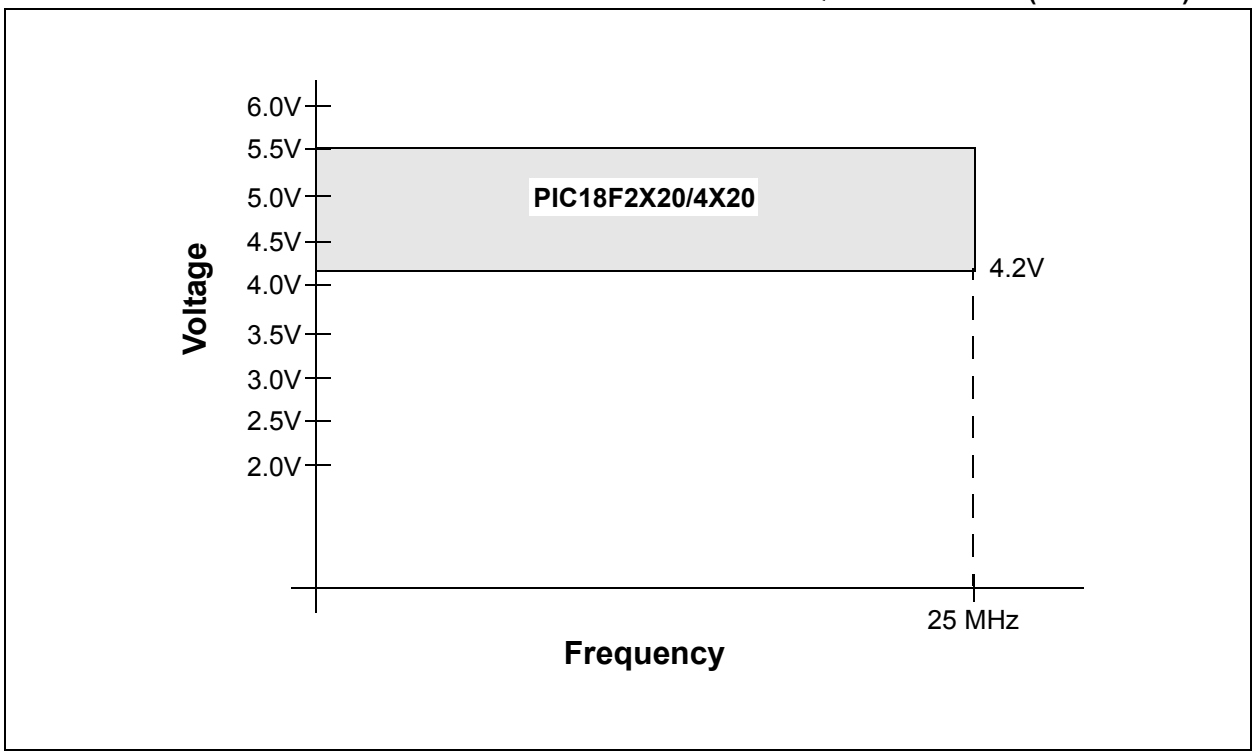

© 2007 Microchip Technology Inc.

FIGURE 26-3: PIC18LF2220/2320/4220/4320 VOLTAGE-FREQUENCY GRAPH (INDUSTRIAL)

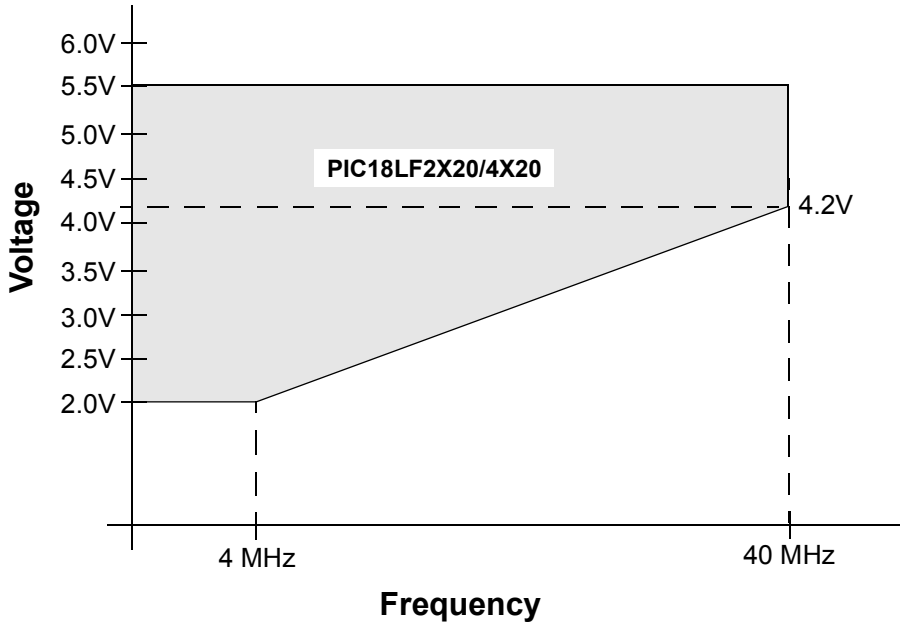

FMAX = (16.36 MHz/V) (VDDAPPMIN – 2.0V) + 4 MHz

Note: VDDAPPMIN is the minimum voltage of the PIC® device in the application.

26.1 DC Characteristics: Supply Voltage PIC18F2220/2320/4220/4320 (Industrial) PIC18LF2220/2320/4220/4320 (Industrial)

PIC18LF2220/2320/4220/4320 (Industrial)			**Standard Operating Conditions (unless otherwise stated)** Operating temperature -40°C ≤ TA ≤ +85°C for industrial				
PIC18F2220/2320/4220/4320 (Industrial, Extended)			**Standard Operating Conditions (unless otherwise stated)** Operating temperature -40°C ≤ TA ≤ +85°C for industrial -40°C ≤ TA ≤ +125°C for extended				
Param No.	**Symbol**	**Characteristic**	**Min**	**Typ**	**Max**	**Units**	**Conditions**
	VDD	**Supply Voltage**					
D001		PIC18LF2X20/4X20	2.0	—	5.5	V	HS, XT, RC and LP Osc mode
		PIC18F2X20/4X20	4.2	—	5.5	V	
D002	VDR	**RAM Data Retention Voltage(1)**	1.5	—	—	V	
D003	VPOR	**VDD Start Voltage** to ensure internal Power-on Reset signal	—	—	0.7	V	See section on Power-on Reset for details
D004	SVDD	**VDD Rise Rate** to ensure internal Power-on Reset signal	0.05	—	—	V/ms	See section on Power-on Reset for details
	VBOR	**Brown-out Reset Voltage — Date codes from 0351xxx to 0417xxx, inclusive**					
		PIC18LF2X20/4X20	Industrial Low Voltage (-40°C to +125°C)				
D005A		BORV1:BORV0 = 11	N/A	N/A	N/A	V	Reserved
		BORV1:BORV0 = 10	2.45	2.72	2.99	V	
		BORV1:BORV0 = 01	3.80	4.22	4.64	V	
		BORV1:BORV0 = 00	4.09	4.54	4.99	V	
D005B		PIC18F2X20/4X20	Industrial (-40°C to +85°C)				
		BORV1:BORV0 = 1x	N/A	N/A	N/A	V	Reserved
		BORV1:BORV0 = 01	3.80	4.22	4.64	V	**(Note 2)**
		BORV1:BORV0 = 00	4.09	4.54	4.99	V	**(Note 2)**
D005C		PIC18F2X20/4X20	Extended (-40°C to +125°C)				
		BORV1:BORV0 = 1x	N/A	N/A	N/A	V	Reserved
		BORV1:BORV0 = 01	3.80	4.22	4.64	V	**(Note 2)**
		BORV1:BORV0 = 00	4.09	4.54	4.99	V	**(Note 2)**

Legend: Shading of rows is to assist in readability of the table.

Note 1: This is the limit to which VDD can be lowered in Sleep mode, or during a device Reset, without losing RAM data.

2: When BOR is on and BORV<1:0> = 0x, the device will operate correctly at 40 MHz for any VDD at which the BOR allows execution.

© 2007 Microchip Technology Inc.

26.1 DC Characteristics: Supply Voltage PIC18F2220/2320/4220/4320 (Industrial) PIC18LF2220/2320/4220/4320 (Industrial) (Continued)

PIC18LF2220/2320/4220/4320 (Industrial)	**Standard Operating Conditions (unless otherwise stated)** Operating temperature -40°C ≤ TA ≤ +85°C for industrial
PIC18F2220/2320/4220/4320 (Industrial, Extended)	**Standard Operating Conditions (unless otherwise stated)** Operating temperature -40°C ≤ TA ≤ +85°C for industrial -40°C ≤ TA ≤ +125°C for extended

Param No.	Symbol	Characteristic	Min	Typ	Max	Units	Conditions
D005D	VBOR	**Brown-out Reset Voltage — Date codes above 0417xxx**					
		PIC18LF2X20/4X20	Industrial Low Voltage (-10°C to +85°C)				
		BORV1:BORV0 = 11	N/A	N/A	N/A	V	Reserved
		BORV1:BORV0 = 10	2.50	2.72	2.94	V	
		BORV1:BORV0 = 01	3.88	4.22	4.56	V	
		BORV1:BORV0 = 00	4.18	4.54	4.90	V	
D005F		PIC18LF2X20/4X20	Industrial Low Voltage (-40°C to -10°C)				
		BORV1:BORV0 = 11	N/A	N/A	N/A	V	Reserved
		BORV1:BORV0 = 10	2.34	2.72	3.10	V	
		BORV1:BORV0 = 01	3.63	4.22	4.81	V	
		BORV1:BORV0 = 00	3.90	4.54	5.18	V	
D005G		PIC18F2X20/4X20	Industrial (-10°C to +85°C)				
		BORV1:BORV0 = 1x	N/A	N/A	N/A	V	Reserved
		BORV1:BORV0 = 01	3.88	4.22	4.56	V	**(Note 2)**
		BORV1:BORV0 = 00	4.18	4.54	4.90	V	**(Note 2)**
D005H		PIC18F2X20/4X20	Industrial (-40°C to -10°C)				
		BORV1:BORV0 = 1x	N/A	N/A	N/A	V	Reserved
		BORV1:BORV0 = 01	N/A	N/A	N/A	V	Reserved
		BORV1:BORV0 = 00	3.90	4.54	5.18	V	**(Note 2)**
D005J		PIC18F2X20/4X20	Extended (-10°C to +85°C)				
		BORV1:BORV0 = 1x	N/A	N/A	N/A	V	Reserved
		BORV1:BORV0 = 01	3.88	4.22	4.56	V	**(Note 2)**
		BORV1:BORV0 = 00	4.18	4.54	4.90	V	**(Note 2)**
D005K		PIC18F2X20/4X20	Extended (-40°C to -10°C, +85°C to +125°C)				
		BORV1:BORV0 = 1x	N/A	N/A	N/A	V	Reserved
		BORV1:BORV0 = 01	N/A	N/A	N/A	V	Reserved
		BORV1:BORV0 = 00	3.90	4.54	5.18	V	**(Note 2)**

Legend: Shading of rows is to assist in readability of the table.

Note 1: This is the limit to which VDD can be lowered in Sleep mode, or during a device Reset, without losing RAM data.

2: When BOR is on and BORV<1:0> = 0x, the device will operate correctly at 40 MHz for any VDD at which the BOR allows execution.

26.2 DC Characteristics: Power-Down and Supply Current PIC18F2220/2320/4220/4320 (Industrial) PIC18LF2220/2320/4220/4320 (Industrial)

PIC18LF2220/2320/4220/4320 (Industrial)		**Standard Operating Conditions (unless otherwise stated)** Operating temperature -40°C ≤ TA ≤ +85°C for industrial					
PIC18F2220/2320/4220/4320 (Industrial, Extended)		**Standard Operating Conditions (unless otherwise stated)** Operating temperature -40°C ≤ TA ≤ +85°C for industrial -40°C ≤ TA ≤ +125°C for extended					
Param No.	**Device**	**Typ**	**Max**	**Units**	**Conditions**		
	Power-down Current (IPD)(1)						
	PIC18LF2X20/4X20	0.1	0.5	µA	-40°C	VDD = 2.0V (**Sleep** mode)	
		0.1	0.5	µA	+25°C		
		0.2	1.7	µA	+85°C		
	PIC18LF2X20/4X20	0.1	0.5	µA	-40°C	VDD = 3.0V (**Sleep** mode)	
		0.1	0.5	µA	+25°C		
		0.3	1.7	µA	+85°C		
	All devices	0.1	2.0	µA	-40°C	VDD = 5.0V (**Sleep** mode)	
		0.1	2.0	µA	+25°C		
		0.4	6.5	µA	+85°C		
	Extended devices	11.2	50	µA	+125°C		
	Supply Current (IDD)(2,3)						
	PIC18LF2X20/4X20	11	25	µA	-40°C	VDD = 2.0V	FOSC = 31 kHz (**RC_RUN** mode, internal oscillator source)
		13	25	µA	+25°C		
		14	25	µA	+85°C		
	PIC18LF2X20/4X20	34	40	µA	-40°C	VDD = 3.0V	
		28	40	µA	+25°C		
		25	40	µA	+85°C		
	All devices	77	80	µA	-40°C	VDD = 5.0V	
		62	80	µA	+25°C		
		53	80	µA	+85°C		
	Extended devices	50	80	µA	+125°C		

Legend: Shading of rows is to assist in readability of the table.

Note 1: The power-down current in Sleep mode does not depend on the oscillator type. Power-down current is measured with the part in Sleep mode, with all I/O pins in high-impedance state and tied to VDD or VSS and all features that add delta current disabled (such as WDT, Timer1 Oscillator, BOR, etc.).

2: The supply current is mainly a function of operating voltage, frequency and mode. Other factors, such as I/O pin loading and switching rate, oscillator type and circuit, internal code execution pattern and temperature, also have an impact on the current consumption.
The test conditions for all IDD measurements in active operation mode are:
OSC1 = external square wave, from rail-to-rail; all I/O pins tri-stated, pulled to VDD;
$\overline{MCLR}$ = VDD; WDT enabled/disabled as specified.

3: For RC oscillator configurations, current through REXT is not included. The current through the resistor can be estimated by the formula Ir = VDD/2REXT (mA) with REXT in kΩ.

4: Standard low-cost 32 kHz crystals have an operating temperature range of -10°C to +70°C. Extended temperature crystals are available at a much higher cost.

© 2007 Microchip Technology Inc.

26.2 DC Characteristics: Power-Down and Supply Current PIC18F2220/2320/4220/4320 (Industrial) PIC18LF2220/2320/4220/4320 (Industrial) (Continued)

PIC18LF2220/2320/4220/4320 (Industrial)		**Standard Operating Conditions (unless otherwise stated)** Operating temperature -40°C ≤ TA ≤ +85°C for industrial					
PIC18F2220/2320/4220/4320 (Industrial, Extended)		**Standard Operating Conditions (unless otherwise stated)** Operating temperature -40°C ≤ TA ≤ +85°C for industrial -40°C ≤ TA ≤ +125°C for extended					
Param No.	**Device**	**Typ**	**Max**	**Units**	**Conditions**		
	Supply Current (IDD)(2,3)						
	PIC18LF2X20/4X20	100	220	µA	-40°C	VDD = 2.0V	FOSC = 1 MHz (**RC_RUN** mode, internal oscillator source)
		110	220	µA	+25°C		
		120	220	µA	+85°C		
	PIC18LF2X20/4X20	180	330	µA	-40°C	VDD = 3.0V	
		180	330	µA	+25°C		
		170	330	µA	+85°C		
	All devices	340	550	µA	-40°C	VDD = 5.0V	
		330	550	µA	+25°C		
		310	550	µA	+85°C		
	Extended devices	410	650	µA	+125°C		
	PIC18LF2X20/4X20	350	600	µA	-40°C	VDD = 2.0V	FOSC = 4 MHz (**RC_RUN** mode, internal oscillator source)
		360	600	µA	+25°C		
		370	600	µA	+85°C		
	PIC18LF2X20/4X20	580	900	µA	-40°C	VDD = 3.0V	
		580	900	µA	+25°C		
		560	900	µA	+85°C		
	All devices	1.1	1.8	mA	-40°C	VDD = 5.0V	
		1.1	1.8	mA	+25°C		
		1.0	1.8	mA	+85°C		
	Extended devices	1.2	1.8	mA	+125°C		

Legend: Shading of rows is to assist in readability of the table.

Note 1: The power-down current in Sleep mode does not depend on the oscillator type. Power-down current is measured with the part in Sleep mode, with all I/O pins in high-impedance state and tied to VDD or VSS and all features that add delta current disabled (such as WDT, Timer1 Oscillator, BOR, etc.).

2: The supply current is mainly a function of operating voltage, frequency and mode. Other factors, such as I/O pin loading and switching rate, oscillator type and circuit, internal code execution pattern and temperature, also have an impact on the current consumption.

The test conditions for all IDD measurements in active operation mode are:

OSC1 = external square wave, from rail-to-rail; all I/O pins tri-stated, pulled to VDD;

$\overline{\text{MCLR}}$ = VDD; WDT enabled/disabled as specified.

3: For RC oscillator configurations, current through REXT is not included. The current through the resistor can be estimated by the formula Ir = VDD/2REXT (mA) with REXT in kΩ.

4: Standard low-cost 32 kHz crystals have an operating temperature range of -10°C to +70°C. Extended temperature crystals are available at a much higher cost.

26.2 DC Characteristics: Power-Down and Supply Current PIC18F2220/2320/4220/4320 (Industrial) PIC18LF2220/2320/4220/4320 (Industrial) (Continued)

PIC18LF2220/2320/4220/4320 (Industrial)		**Standard Operating Conditions (unless otherwise stated)** Operating temperature -40°C ≤ TA ≤ +85°C for industrial					
PIC18F2220/2320/4220/4320 (Industrial, Extended)		**Standard Operating Conditions (unless otherwise stated)** Operating temperature -40°C ≤ TA ≤ +85°C for industrial -40°C ≤ TA ≤ +125°C for extended					
Param No.	**Device**	**Typ**	**Max**	**Units**	**Conditions**		
	Supply Current (IDD)(2,3)						
	PIC18LF2X20/4X20	4.7	8	µA	-40°C	VDD = 2.0V	FOSC = 31 kHz (**RC_IDLE** mode, internal oscillator source)
		4.6	8	µA	+25°C		
		5.1	11	µA	+85°C		
	PIC18LF2X20/4X20	6.9	11	µA	-40°C	VDD = 3.0V	
		6.3	11	µA	+25°C		
		6.8	15	µA	+85°C		
	All devices	12	16	µA	-40°C	VDD = 5.0V	
		10	16	µA	+25°C		
		10	22	µA	+85°C		
	Extended devices	25	75	µA	+125°C		
	PIC18LF2X20/4X20	49	150	µA	-40°C	VDD = 2.0V	FOSC = 1 MHz (**RC_IDLE** mode, internal oscillator source)
		52	150	µA	+25°C		
		56	150	µA	+85°C		
	PIC18LF2X20/4X20	73	180	µA	-40°C	VDD = 3.0V	
		77	180	µA	+25°C		
		77	180	µA	+85°C		
	All devices	130	300	µA	-40°C	VDD = 5.0V	
		130	300	µA	+25°C		
		130	300	µA	+85°C		
	Extended devices	350	435	µA	+125°C		

Legend: Shading of rows is to assist in readability of the table.

Note 1: The power-down current in Sleep mode does not depend on the oscillator type. Power-down current is measured with the part in Sleep mode, with all I/O pins in high-impedance state and tied to VDD or VSS and all features that add delta current disabled (such as WDT, Timer1 Oscillator, BOR, etc.).

2: The supply current is mainly a function of operating voltage, frequency and mode. Other factors, such as I/O pin loading and switching rate, oscillator type and circuit, internal code execution pattern and temperature, also have an impact on the current consumption.
The test conditions for all IDD measurements in active operation mode are:
OSC1 = external square wave, from rail-to-rail; all I/O pins tri-stated, pulled to VDD;
$\overline{\text{MCLR}}$ = VDD; WDT enabled/disabled as specified.

3: For RC oscillator configurations, current through REXT is not included. The current through the resistor can be estimated by the formula Ir = VDD/2REXT (mA) with REXT in kΩ.

4: Standard low-cost 32 kHz crystals have an operating temperature range of -10°C to +70°C. Extended temperature crystals are available at a much higher cost.

© 2007 Microchip Technology Inc.

26.2 DC Characteristics: Power-Down and Supply Current PIC18F2220/2320/4220/4320 (Industrial) PIC18LF2220/2320/4220/4320 (Industrial) (Continued)

PIC18LF2220/2320/4220/4320 (Industrial)		**Standard Operating Conditions (unless otherwise stated)** Operating temperature -40°C ≤ TA ≤ +85°C for industrial					
PIC18F2220/2320/4220/4320 (Industrial, Extended)		**Standard Operating Conditions (unless otherwise stated)** Operating temperature -40°C ≤ TA ≤ +85°C for industrial -40°C ≤ TA ≤ +125°C for extended					
Param No.	**Device**	**Typ**	**Max**	**Units**	**Conditions**		
	Supply Current (IDD)(2,3)						
	PIC18LF2X20/4X20	140	275	µA	-40°C	VDD = 2.0V	FOSC = 4 MHz (**RC_IDLE** mode, internal oscillator source)
		140	275	µA	+25°C		
		150	275	µA	+85°C		
	PIC18LF2X20/4X20	220	375	µA	-40°C	VDD = 3.0V	
		220	375	µA	+25°C		
		210	375	µA	+85°C		
	All devices	390	800	µA	-40°C	VDD = 5.0V	
		400	800	µA	+25°C		
		380	800	µA	+85°C		
	Extended devices	410	800	µA	+125°C		
	PIC18LF2X20/4X20	150	250	µA	-40°C	VDD = 2.0V	FOSC = 1 MHz (**PRI_RUN**, EC oscillator)
		150	250	µA	+25°C		
		160	250	µA	+85°C		
	PIC18LF2X20/4X20	340	350	µA	-40°C	VDD = 3.0V	
		300	350	µA	+25°C		
		280	350	µA	+85°C		
	All devices	0.72	1.0	mA	-40°C	VDD = 5.0V	
		0.63	1.0	mA	+25°C		
		0.57	1.0	mA	+85°C		
	Extended devices	0.53	1.0	mA	+125°C		

Legend: Shading of rows is to assist in readability of the table.

Note 1: The power-down current in Sleep mode does not depend on the oscillator type. Power-down current is measured with the part in Sleep mode, with all I/O pins in high-impedance state and tied to VDD or VSS and all features that add delta current disabled (such as WDT, Timer1 Oscillator, BOR, etc.).

2: The supply current is mainly a function of operating voltage, frequency and mode. Other factors, such as I/O pin loading and switching rate, oscillator type and circuit, internal code execution pattern and temperature, also have an impact on the current consumption.
The test conditions for all IDD measurements in active operation mode are:
OSC1 = external square wave, from rail-to-rail; all I/O pins tri-stated, pulled to VDD;
$\overline{\text{MCLR}}$ = VDD; WDT enabled/disabled as specified.

3: For RC oscillator configurations, current through REXT is not included. The current through the resistor can be estimated by the formula Ir = VDD/2REXT (mA) with REXT in kΩ.

4: Standard low-cost 32 kHz crystals have an operating temperature range of -10°C to +70°C. Extended temperature crystals are available at a much higher cost.

26.2 DC Characteristics: Power-Down and Supply Current PIC18F2220/2320/4220/4320 (Industrial) PIC18LF2220/2320/4220/4320 (Industrial) (Continued)

PIC18LF2220/2320/4220/4320 (Industrial)	Standard Operating Conditions (unless otherwise stated) Operating temperature -40°C ≤ TA ≤ +85°C for industrial
PIC18F2220/2320/4220/4320 (Industrial, Extended)	Standard Operating Conditions (unless otherwise stated) Operating temperature -40°C ≤ TA ≤ +85°C for industrial -40°C ≤ TA ≤ +125°C for extended

Param No.	Device	Typ	Max	Units	Conditions		
	Supply Current (IDD)(2,3)						
	PIC18LF2X20/4X20	440	600	µA	-40°C	VDD = 2.0V	FOSC = 4 MHz (**PRI_RUN**, EC oscillator)
		450	600	µA	+25°C		
		460	600	µA	+85°C		
	PIC18LF2X20/4X20	0.80	1.0	mA	-40°C	VDD = 3.0V	
		0.78	1.0	mA	+25°C		
		0.77	1.0	mA	+85°C		
	All devices	1.6	2.0	mA	-40°C	VDD = 5.0V	
		1.5	2.0	mA	+25°C		
		1.5	2.0	mA	+85°C		
	Extended devices	1.5	2.0	mA	+125°C		
	Extended devices	6.3	9.0	mA	+125°C	VDD = 4.2V	FOSC = 25 MHz (**PRI_RUN**, EC oscillator)
		7.9	10.0	mA	+125°C	VDD = 5.0V	
	All devices	9.5	12	mA	-40°C	VDD = 4.2V	FOSC = 40 MHz (**PRI_RUN**, EC oscillator)
		9.7	12	mA	+25°C		
		9.9	12	mA	+85°C		
	All devices	11.9	15	mA	-40°C	VDD = 5.0V	
		12.1	15	mA	+25°C		
		12.3	15	mA	+85°C		

Legend: Shading of rows is to assist in readability of the table.

Note 1: The power-down current in Sleep mode does not depend on the oscillator type. Power-down current is measured with the part in Sleep mode, with all I/O pins in high-impedance state and tied to VDD or VSS and all features that add delta current disabled (such as WDT, Timer1 Oscillator, BOR, etc.).

2: The supply current is mainly a function of operating voltage, frequency and mode. Other factors, such as I/O pin loading and switching rate, oscillator type and circuit, internal code execution pattern and temperature, also have an impact on the current consumption.

The test conditions for all IDD measurements in active operation mode are:

OSC1 = external square wave, from rail-to-rail; all I/O pins tri-stated, pulled to VDD;

$\overline{MCLR}$ = VDD; WDT enabled/disabled as specified.

3: For RC oscillator configurations, current through REXT is not included. The current through the resistor can be estimated by the formula Ir = VDD/2REXT (mA) with REXT in kΩ.

4: Standard low-cost 32 kHz crystals have an operating temperature range of -10°C to +70°C. Extended temperature crystals are available at a much higher cost.

© 2007 Microchip Technology Inc.

26.2 DC Characteristics: Power-Down and Supply Current PIC18F2220/2320/4220/4320 (Industrial) PIC18LF2220/2320/4220/4320 (Industrial) (Continued)

PIC18LF2220/2320/4220/4320 (Industrial)		**Standard Operating Conditions (unless otherwise stated)** Operating temperature -40°C ≤ TA ≤ +85°C for industrial					
PIC18F2220/2320/4220/4320 (Industrial, Extended)		**Standard Operating Conditions (unless otherwise stated)** Operating temperature -40°C ≤ TA ≤ +85°C for industrial -40°C ≤ TA ≤ +125°C for extended					
Param No.	**Device**	**Typ**	**Max**	**Units**	**Conditions**		
	Supply Current (IDD)(2,3)						
	PIC18LF2X20/4X20	37	50	µA	-40°C	VDD = 2.0V	FOSC = 1 MHz (**PRI_IDLE** mode, EC oscillator)
		37	50	µA	+25°C		
		38	60	µA	+85°C		
	PIC18LF2X20/4X20	58	80	µA	-40°C	VDD = 3.0V	
		59	80	µA	+25°C		
		60	100	µA	+85°C		
	All devices	110	180	µA	-40°C	VDD = 5.0V	
		110	180	µA	+25°C		
		110	180	µA	+85°C		
	Extended devices	125	300	µA	+125°C		
	PIC18LF2X20/4X20	140	180	µA	-40°C	VDD = 2.0V	FOSC = 4 MHz (**PRI_IDLE** mode, EC oscillator)
		140	180	µA	+25°C		
		140	180	µA	+85°C		
	PIC18LF2X20/4X20	220	280	µA	-40°C	VDD = 3.0V	
		230	280	µA	+25°C		
		230	280	µA	+85°C		
	All devices	410	525	µA	-40°C	VDD = 5.0V	
		420	525	µA	+25°C		
		430	525	µA	+85°C		
	Extended devices	450	800	µA	+125°C		
	Extended devices	2.2	3.0	mA	+125°C	VDD = 4.2V	FOSC = 25 MHz (**PRI_IDLE**, EC oscillator)
		2.7	3.5	mA	+125°C	VDD = 5.0V	

Legend: Shading of rows is to assist in readability of the table.

Note 1: The power-down current in Sleep mode does not depend on the oscillator type. Power-down current is measured with the part in Sleep mode, with all I/O pins in high-impedance state and tied to VDD or VSS and all features that add delta current disabled (such as WDT, Timer1 Oscillator, BOR, etc.).

2: The supply current is mainly a function of operating voltage, frequency and mode. Other factors, such as I/O pin loading and switching rate, oscillator type and circuit, internal code execution pattern and temperature, also have an impact on the current consumption.
The test conditions for all IDD measurements in active operation mode are:
OSC1 = external square wave, from rail-to-rail; all I/O pins tri-stated, pulled to VDD;
$\overline{\text{MCLR}}$ = VDD; WDT enabled/disabled as specified.

3: For RC oscillator configurations, current through REXT is not included. The current through the resistor can be estimated by the formula Ir = VDD/2REXT (mA) with REXT in kΩ.

4: Standard low-cost 32 kHz crystals have an operating temperature range of -10°C to +70°C. Extended temperature crystals are available at a much higher cost.

26.2 DC Characteristics: Power-Down and Supply Current PIC18F2220/2320/4220/4320 (Industrial) PIC18LF2220/2320/4220/4320 (Industrial) (Continued)

PIC18LF2220/2320/4220/4320 (Industrial)		**Standard Operating Conditions (unless otherwise stated)** Operating temperature -40°C ≤ TA ≤ +85°C for industrial					
PIC18F2220/2320/4220/4320 (Industrial, Extended)		**Standard Operating Conditions (unless otherwise stated)** Operating temperature -40°C ≤ TA ≤ +85°C for industrial -40°C ≤ TA ≤ +125°C for extended					
Param No.	**Device**	**Typ**	**Max**	**Units**	**Conditions**		
	Supply Current (IDD)(2,3)						
	All devices	3.1	4.1	mA	-40°C	VDD = 4.2 V	FOSC = 40 MHz (**PRI_IDLE** mode, EC oscillator)
		3.2	4.1	mA	+25°C		
		3.3	4.1	mA	+85°C		
	All devices	4.4	5.1	mA	-40°C	VDD = 5.0V	
		4.6	5.1	mA	+25°C		
		4.6	5.1	mA	+85°C		
	PIC18LF2X20/4X20	9	15	µA	-40°C	VDD = 2.0V	FOSC = 32 kHz(4) (**SEC_RUN** mode, Timer1 as clock)
		10	15	µA	+25°C		
		13	18	µA	+85°C		
	PIC18LF2X20/4X20	22	30	µA	-40°C	VDD = 3.0V	
		21	30	µA	+25°C		
		20	35	µA	+85°C		
	All devices	50	80	µA	-40°C	VDD = 5.0V	
		50	80	µA	+25°C		
		45	85	µA	+85°C		
	PIC18LF2X20/4X20	5.1	9	µA	-40°C	VDD = 2.0V	FOSC = 32 kHz(4) (**SEC_IDLE** mode, Timer1 as clock)
		5.8	9	µA	+25°C		
		7.9	11	µA	+85°C		
	PIC18LF2X20/4X20	7.9	12	µA	-40°C	VDD = 3.0V	
		8.9	12	µA	+25°C		
		10.5	14	µA	+85°C		
	All devices	13	20	µA	-40°C	VDD = 5.0V	
		16	20	µA	+25°C		
		18	25	µA	+85°C		

Legend: Shading of rows is to assist in readability of the table.

Note 1: The power-down current in Sleep mode does not depend on the oscillator type. Power-down current is measured with the part in Sleep mode, with all I/O pins in high-impedance state and tied to VDD or VSS and all features that add delta current disabled (such as WDT, Timer1 Oscillator, BOR, etc.).

2: The supply current is mainly a function of operating voltage, frequency and mode. Other factors, such as I/O pin loading and switching rate, oscillator type and circuit, internal code execution pattern and temperature, also have an impact on the current consumption.
The test conditions for all IDD measurements in active operation mode are:
OSC1 = external square wave, from rail-to-rail; all I/O pins tri-stated, pulled to VDD;
$\overline{\text{MCLR}}$ = VDD; WDT enabled/disabled as specified.

3: For RC oscillator configurations, current through REXT is not included. The current through the resistor can be estimated by the formula Ir = VDD/2REXT (mA) with REXT in kΩ.

4: Standard low-cost 32 kHz crystals have an operating temperature range of -10°C to +70°C. Extended temperature crystals are available at a much higher cost.

© 2007 Microchip Technology Inc.

26.2 DC Characteristics: Power-Down and Supply Current PIC18F2220/2320/4220/4320 (Industrial) PIC18LF2220/2320/4220/4320 (Industrial) (Continued)

PIC18LF2220/2320/4220/4320 (Industrial)		**Standard Operating Conditions (unless otherwise stated)** Operating temperature -40°C ≤ TA ≤ +85°C for industrial					
PIC18F2220/2320/4220/4320 (Industrial, Extended)		**Standard Operating Conditions (unless otherwise stated)** Operating temperature -40°C ≤ TA ≤ +85°C for industrial -40°C ≤ TA ≤ +125°C for extended					
Param No.	**Device**	**Typ**	**Max**	**Units**	**Conditions**		
	Module Differential Currents (ΔIWDT, ΔIBOR, ΔILVD, ΔIOSCB, ΔIAD)						
D022 (ΔIWDT)	**Watchdog Timer**	1.5	3.8	µA	-40°C	VDD = 2.0V	
		2.2	3.8	µA	+25°C		
		2.7	4.0	µA	+85°C		
		2.3	4.6	µA	-40°C	VDD = 3.0V	
		2.7	4.6	µA	+25°C		
		3.1	4.8	µA	+85°C		
		3.0	10.0	µA	-40°C	VDD = 5.0V	
		3.3	10.0	µA	+25°C		
		3.9	10.0	µA	+85°C		
	Extended devices only	4.0	13.0	µA	+125°C		
D022A (ΔIBOR)	**Brown-out Reset**	35	50	µA	-40°C to +85°C	VDD = 3.0V	
		42	60	µA		VDD = 5.0V	
	Extended devices only	46	65	µA	-40°C to +125°C		
D022B (ΔILVD)	**Low-Voltage Detect**	31	45	µA	-40°C to +85°C	VDD = 2.0V	
		33	50	µA		VDD = 3.0V	
		42	60	µA		VDD = 5.0V	
	Extended devices only	46	65	µA	-40°C to +125°C		

Legend: Shading of rows is to assist in readability of the table.

Note 1: The power-down current in Sleep mode does not depend on the oscillator type. Power-down current is measured with the part in Sleep mode, with all I/O pins in high-impedance state and tied to VDD or VSS and all features that add delta current disabled (such as WDT, Timer1 Oscillator, BOR, etc.).

2: The supply current is mainly a function of operating voltage, frequency and mode. Other factors, such as I/O pin loading and switching rate, oscillator type and circuit, internal code execution pattern and temperature, also have an impact on the current consumption.

The test conditions for all IDD measurements in active operation mode are:

OSC1 = external square wave, from rail-to-rail; all I/O pins tri-stated, pulled to VDD;

$\overline{MCLR}$ = VDD; WDT enabled/disabled as specified.

3: For RC oscillator configurations, current through REXT is not included. The current through the resistor can be estimated by the formula Ir = VDD/2REXT (mA) with REXT in kΩ.

4: Standard low-cost 32 kHz crystals have an operating temperature range of -10°C to +70°C. Extended temperature crystals are available at a much higher cost.

26.2 DC Characteristics: Power-Down and Supply Current PIC18F2220/2320/4220/4320 (Industrial) PIC18LF2220/2320/4220/4320 (Industrial) (Continued)

PIC18LF2220/2320/4220/4320 (Industrial)		**Standard Operating Conditions (unless otherwise stated)** Operating temperature -40°C ≤ TA ≤ +85°C for industrial					
PIC18F2220/2320/4220/4320 (Industrial, Extended)		**Standard Operating Conditions (unless otherwise stated)** Operating temperature -40°C ≤ TA ≤ +85°C for industrial -40°C ≤ TA ≤ +125°C for extended					
Param No.	**Device**	**Typ**	**Max**	**Units**	**Conditions**		
D025 (ΔIOSCB)	**Timer1 Oscillator**	2.1	2.2	μA	-40°C	VDD = 2.0V	32 kHz on Timer1(4)
		1.8	2.2	μA	+25°C		
		2.1	2.2	μA	+85°C		
		2.2	3.8	μA	-40°C	VDD = 3.0V	32 kHz on Timer1(4)
		2.6	3.8	μA	+25°C		
		2.9	3.8	μA	+85°C		
		3.0	6.0	μA	-40°C	VDD = 5.0V	32 kHz on Timer1(4)
		3.2	6.0	μA	+25°C		
		3.4	7.0	μA	+85°C		
D026 (ΔIAD)	**A/D Converter**	1.0	2.0	μA	-40°C to +85°C	VDD = 2.0V	A/D on, not converting
		1.0	2.0	μA	-40°C to +85°C	VDD = 3.0V	
		1.0	2.0	μA	-40°C to +85°C	VDD = 5.0V	
	Extended devices only	1.0	8.0	μA	-40°C to +125°C	VDD = 5.0V	

Legend: Shading of rows is to assist in readability of the table.

Note 1: The power-down current in Sleep mode does not depend on the oscillator type. Power-down current is measured with the part in Sleep mode, with all I/O pins in high-impedance state and tied to VDD or VSS and all features that add delta current disabled (such as WDT, Timer1 Oscillator, BOR, etc.).

2: The supply current is mainly a function of operating voltage, frequency and mode. Other factors, such as I/O pin loading and switching rate, oscillator type and circuit, internal code execution pattern and temperature, also have an impact on the current consumption.
The test conditions for all IDD measurements in active operation mode are:
OSC1 = external square wave, from rail-to-rail; all I/O pins tri-stated, pulled to VDD;
$\overline{MCLR}$ = VDD; WDT enabled/disabled as specified.

3: For RC oscillator configurations, current through REXT is not included. The current through the resistor can be estimated by the formula Ir = VDD/2REXT (mA) with REXT in kΩ.

4: Standard low-cost 32 kHz crystals have an operating temperature range of -10°C to +70°C. Extended temperature crystals are available at a much higher cost.

© 2007 Microchip Technology Inc.

26.3 DC Characteristics: PIC18F2220/2320/4220/4320 (Industrial) PIC18LF2220/2320/4220/4320 (Industrial)

DC CHARACTERISTICS			Standard Operating Conditions (unless otherwise stated) Operating temperature -40°C ≤ TA ≤ +85°C for industrial -40°C ≤ TA ≤ +125°C for extended			
Param No.	**Symbol**	**Characteristic**	**Min**	**Max**	**Units**	**Conditions**
	VIL	**Input Low Voltage**				
		I/O Ports:				
D030		with TTL Buffer	VSS	0.15 VDD	V	VDD < 4.5V
D030A			—	0.8	V	4.5V ≤ VDD ≤ 5.5V
D031		with Schmitt Trigger Buffer	VSS	0.2 VDD	V	
		RC3 and RC4	VSS	0.3 VDD	V	
D032		$\overline{MCLR}$	VSS	0.2 VDD	V	
D032A		OSC1 and T1OSI	VSS	0.2 VDD	V	LP, XT, HS, HSPLL modes(1)
D033		OSC1	VSS	0.2 VDD	V	EC mode(1)
	VIH	**Input High Voltage**				
		I/O Ports:				
D040		with TTL Buffer	0.25 VDD + 0.8V	VDD	V	VDD < 4.5V
D040A			2.0	VDD	V	4.5V ≤ VDD ≤ 5.5V
D041		with Schmitt Trigger Buffer	0.8 VDD	VDD	V	
		RC3 and RC4	0.7 VDD	VDD	V	
D042		$\overline{MCLR}$	0.8 VDD	VDD	V	
D042A		OSC1 and T1OSI	1.6	VDD	V	LP, XT, HS, HSPLL modes(1)
D043		OSC1	0.8 VDD	VDD	V	EC mode(1)
	IIL	**Input Leakage Current(2,3)**				
D060		I/O Ports	—	±0.2	µA	VSS ≤ VPIN ≤ VDD, Pin at high-impedance
D061		$\overline{MCLR}$, RA4	—	±1.0	µA	Vss ≤ VPIN ≤ VDD
D063		OSC1	—	±1.0	µA	Vss ≤ VPIN ≤ VDD
	IPU	**Weak Pull-up Current**				
D070	IPURB	PORTB Weak Pull-up Current	50	400	µA	VDD = 5V, VPIN = VSS

Note 1: In RC oscillator configuration, the OSC1/CLKI pin is a Schmitt Trigger input. It is not recommended that the PIC® device be driven with an external clock while in RC mode.

2: The leakage current on the $\overline{MCLR}$ pin is strongly dependent on the applied voltage level. The specified levels represent normal operating conditions. Higher leakage current may be measured at different input voltages.

3: Negative current is defined as current sourced by the pin.

4: Parameter is characterized but not tested.

26.3 DC Characteristics: PIC18F2220/2320/4220/4320 (Industrial) PIC18LF2220/2320/4220/4320 (Industrial) (Continued)

DC CHARACTERISTICS			Standard Operating Conditions (unless otherwise stated) Operating temperature -40°C ≤ TA ≤ +85°C for industrial -40°C ≤ TA ≤ +125°C for extended			
Param No.	**Symbol**	**Characteristic**	**Min**	**Max**	**Units**	**Conditions**
	VOL	**Output Low Voltage**				
D080		I/O Ports	—	0.6	V	IOL = 8.5 mA, VDD = 4.5V, -40°C to +85°C
D080A			—	0.6	V	IOL = 7.0 mA, VDD = 4.5V, -40°C to +125°C
D083		OSC2/CLKO (RC mode)	—	0.6	V	IOL = 1.6 mA, VDD = 4.5V, -40°C to +85°C
D083A			—	0.6	V	IOL = 1.2 mA, VDD = 4.5V, -40°C to +125°C
	VOH	**Output High Voltage(3)**				
D090		I/O Ports	VDD – 0.7	—	V	IOH = -3.0 mA, VDD = 4.5V, -40°C to +85°C
D090A			VDD – 0.7	—	V	IOH = -2.5 mA, VDD = 4.5V, -40°C to +125°C
D092		OSC2/CLKO (RC mode)	VDD – 0.7	—	V	IOH = -1.3 mA, VDD = 4.5V, -40°C to +85°C
D092A			VDD – 0.7	—	V	IOH = -1.0 mA, VDD = 4.5V, -40°C to +125°C
D150	VOD	**Open-Drain High Voltage**	—	8.5	V	RA4 pin
		Capacitive Loading Specs on Output Pins				
D100(4)	COSC2	OSC2 Pin	—	15	pF	In XT, HS and LP modes when external clock is used to drive OSC1
D101	CIO	All I/O Pins and OSC2 (in RC mode)	—	50	pF	To meet the AC Timing Specifications
D102	CB	SCL, SDA	—	400	pF	In I^2C mode

Note 1: In RC oscillator configuration, the OSC1/CLKI pin is a Schmitt Trigger input. It is not recommended that the PIC® device be driven with an external clock while in RC mode.

2: The leakage current on the $\overline{\text{MCLR}}$ pin is strongly dependent on the applied voltage level. The specified levels represent normal operating conditions. Higher leakage current may be measured at different input voltages.

3: Negative current is defined as current sourced by the pin.

4: Parameter is characterized but not tested.

© 2007 Microchip Technology Inc.

TABLE 26-1: MEMORY PROGRAMMING REQUIREMENTS

DC Characteristics			Standard Operating Conditions (unless otherwise stated) Operating temperature -40°C ≤ TA ≤ +85°C for industrial -40°C ≤ TA ≤ +125°C for extended				
Param No.	**Sym**	**Characteristic**	**Min**	**Typ†**	**Max**	**Units**	**Conditions**
		Internal Program Memory Programming Specifications					
D110	VPP	Voltage on $\overline{\text{MCLR}}$/VPP pin	9.00	—	13.25	V	**(Note 2)**
D112	IPP	Current into $\overline{\text{MCLR}}$/VPP pin	—	—	300	μA	
D113	IDDP	Supply Current during Programming	—	—	1.0	mA	
		Data EEPROM Memory					
D120	ED	Byte Endurance	100K 10K	1M 100K	— —	E/W E/W	-40°C to +85°C -40°C to +125°C
D121	VDRW	VDD for Read/Write	VMIN	—	5.5	V	Using EECON to read/write VMIN = Minimum operating voltage
D122	TDEW	Erase/Write Cycle Time	—	4	—	ms	
D123	TRETD	Characteristic Retention	40	—	—	Year	Provided no other specifications are violated
D124	TREF	Number of Total Erase/Write Cycles before Refresh(1)	1M 100K	10M 1M	— —	E/W E/W	-40°C to +85°C -40°C to +125°C
		Program Flash Memory					
D130	EP	Cell Endurance	10K 1K	100K 10K	— —	E/W E/W	-40°C to +85°C -40°C to +125°C
D131	VPR	VDD for Read	VMIN	—	5.5	V	VMIN = Minimum operating voltage
D132	VIE	VDD for Block Erase	4.5	—	5.5	V	Using ICSP port
D132A	VIW	VDD for Externally Timed Erase or Write	4.5	—	5.5	V	Using ICSP port
D132B	VPEW	VDD for Self-Timed Write	VMIN	—	5.5	V	VMIN = Minimum operating voltage
D133	TIE	ICSP Block Erase Cycle Time	—	4	—	ms	VDD > 4.5V
D133A	TIW	ICSP Erase or Write Cycle Time (externally timed)	1	—	—	ms	VDD > 4.5V
D133A	TIW	Self-Timed Write Cycle Time	—	2	—	ms	
D134	TRETD	Characteristic Retention	40	—	—	Year	Provided no other specifications are violated

† Data in "Typ" column is at 5.0V, 25°C unless otherwise stated. These parameters are for design guidance only and are not tested.

Note 1: Refer to **Section 7.8 "Using the Data EEPROM"** for a more detailed discussion on data EEPROM endurance.

2: Required only if Low-Voltage Programming is disabled.

TABLE 26-2: COMPARATOR SPECIFICATIONS

Operating Conditions: 3.0V < VDD < 5.5V, -40°C < TA < +125°C, unless otherwise stated.							
Param No.	**Sym**	**Characteristics**	**Min**	**Typ**	**Max**	**Units**	**Comments**
D300	VIOFF	Input Offset Voltage	—	±5.0	±10	mV	
D301	VICM	Input Common Mode Voltage*	0	—	VDD – 1.5	V	
D302	CMRR	Common Mode Rejection Ratio*	55	—	—	dB	
300 300A	TRESP	Response Time(1)*	—	150	400 600	ns ns	PIC18FXX20 PIC18LFXX20
301	TMC2OV	Comparator Mode Change to Output Valid*	—	—	10	μs	

* These parameters are characterized but not tested.

Note 1: Response time measured with one comparator input at (VDD – 1.5)/2, while the other input transitions from VSS to VDD.

TABLE 26-3: VOLTAGE REFERENCE SPECIFICATIONS

Operating Conditions: 3.0V < VDD < 5.5V, -40°C < TA < +125°C, unless otherwise stated.							
Param No.	**Sym**	**Characteristics**	**Min**	**Typ**	**Max**	**Units**	**Comments**
D310	VRES	Resolution	VDD/24	—	VDD/32	LSb	
D311	VRAA	Absolute Accuracy	— —	— —	1/2 1/2	LSb LSb	Low Range (VRR = 1) High Range (VRR = 0)
D312	VRUR	Unit Resistor Value (R)*	—	2k	—	Ω	
310	TSET	Settling Time(1)*	—	—	10	μs	

* These parameters are characterized but not tested.

Note 1: Settling time measured while VRR = 1 and VR<3:0> transitions from '0000' to '1111'.

FIGURE 26-4: LOW-VOLTAGE DETECT CHARACTERISTICS

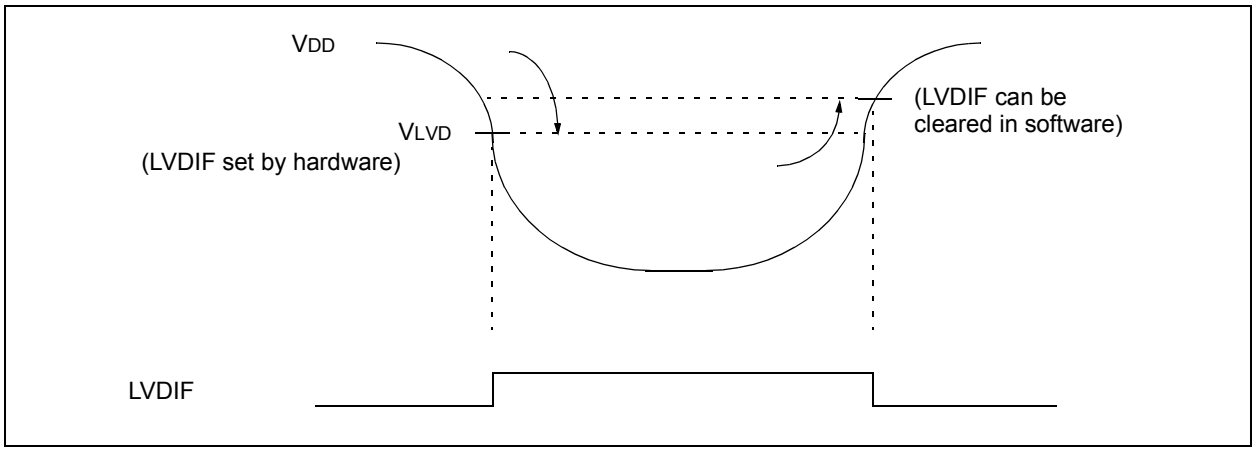

© 2007 Microchip Technology Inc.

TABLE 26-4: LOW-VOLTAGE DETECT CHARACTERISTICS

PIC18LF2220/2320/4220/4320 (Industrial)				**Standard Operating Conditions (unless otherwise stated)** Operating temperature -40°C ≤ TA ≤ +85°C for industrial				
PIC18F2220/2320/4220/4320 (Industrial, Extended)				**Standard Operating Conditions (unless otherwise stated)** Operating temperature -40°C ≤ TA ≤ +85°C for industrial -40°C ≤ TA ≤ +125°C for extended				
Param No.	**Symbol**	**Characteristic**		**Min**	**Typ†**	**Max**	**Units**	**Conditions**
	VLVD	LVD Voltage on VDD Transition High-to-Low — Date codes from 0351xxx to 0417xxx, inclusive						
D420A		PIC18LF2X20/4X20		Industrial Low Voltage (-40°C to +85°C)				
			LVDL<3:0> = 0000	N/A	N/A	N/A	V	Reserved
			LVDL<3:0> = 0001	N/A	N/A	N/A	V	Reserved
			LVDL<3:0> = 0010	2.08	2.26	2.44	V	
			LVDL<3:0> = 0011	2.26	2.45	2.65	V	
			LVDL<3:0> = 0100	2.35	2.55	2.76	V	
			LVDL<3:0> = 0101	2.55	2.77	2.99	V	
			LVDL<3:0> = 0110	2.64	2.87	3.10	V	
			LVDL<3:0> = 0111	2.82	3.07	3.31	V	
			LVDL<3:0> = 1000	3.09	3.36	3.63	V	
			LVDL<3:0> = 1001	3.29	3.57	3.86	V	
			LVDL<3:0> = 1010	3.38	3.67	3.96	V	
			LVDL<3:0> = 1011	3.56	3.87	4.18	V	
			LVDL<3:0> = 1100	3.75	4.07	4.40	V	
			LVDL<3:0> = 1101	3.93	4.28	4.62	V	
			LVDL<3:0> = 1110	4.23	4.60	4.96	V	
D420B		PIC18F2X20/4X20		Industrial (-40°C to +85°C)				
			LVDL<3:0> = 1011	3.56	3.87	4.18	V	
			LVDL<3:0> = 1100	3.75	4.07	4.40	V	
			LVDL<3:0> = 1101	3.93	4.28	4.62	V	
			LVDL<3:0> = 1110	4.23	4.60	4.96	V	
D420C		PIC18F2X20/4X20		Extended (-40°C to +125°C)				
			LVDL<3:0> = 1011	3.41	3.87	4.33	V	
			LVDL<3:0> = 1100	3.58	4.07	4.56	V	
			LVDL<3:0> = 1101	3.77	4.28	4.79	V	
			LVDL<3:0> = 1110	4.04	4.60	5.15	V	

Legend: Shading of rows is to assist in readability of the table.

† Production tested at TAMB = 25°C. Specifications over temperature limits ensured by characterization.

TABLE 26-4: LOW-VOLTAGE DETECT CHARACTERISTICS (CONTINUED)

PIC18LF2220/2320/4220/4320 (Industrial)				**Standard Operating Conditions (unless otherwise stated)** Operating temperature -40°C ≤ TA ≤ +85°C for industrial				
PIC18F2220/2320/4220/4320 (Industrial, Extended)				**Standard Operating Conditions (unless otherwise stated)** Operating temperature -40°C ≤ TA ≤ +85°C for industrial -40°C ≤ TA ≤ +125°C for extended				
Param No.	**Symbol**	**Characteristic**		**Min**	**Typ†**	**Max**	**Units**	**Conditions**
	VLVD	LVD Voltage on VDD Transition High-to-Low — **Date codes above 0417xxx**						
D420D		PIC18LF2X20/4X20		Industrial Low Voltage (-10°C to +85°C)				
			LVDL<3:0> = 0000	N/A	N/A	N/A	V	Reserved
			LVDL<3:0> = 0001	N/A	N/A	N/A	V	Reserved
			LVDL<3:0> = 0010	2.08	2.26	2.44	V	
			LVDL<3:0> = 0011	2.26	2.45	2.65	V	
			LVDL<3:0> = 0100	2.35	2.55	2.76	V	
			LVDL<3:0> = 0101	2.55	2.77	2.99	V	
			LVDL<3:0> = 0110	2.64	2.87	3.10	V	
			LVDL<3:0> = 0111	2.82	3.07	3.31	V	
			LVDL<3:0> = 1000	3.09	3.36	3.63	V	
			LVDL<3:0> = 1001	3.29	3.57	3.86	V	
			LVDL<3:0> = 1010	3.38	3.67	3.96	V	
			LVDL<3:0> = 1011	3.56	3.87	4.18	V	
			LVDL<3:0> = 1100	3.75	4.07	4.40	V	
			LVDL<3:0> = 1101	3.93	4.28	4.62	V	
			LVDL<3:0> = 1110	4.23	4.60	4.96	V	
D420F		PIC18LF2X20/4X20		Industrial Low Voltage (-40°C to -10°C)				
			LVDL<3:0> = 0000	N/A	N/A	N/A	V	Reserved
			LVDL<3:0> = 0001	N/A	N/A	N/A	V	Reserved
			LVDL<3:0> = 0010	1.99	2.26	2.53	V	
			LVDL<3:0> = 0011	2.16	2.45	2.75	V	
			LVDL<3:0> = 0100	2.25	2.55	2.86	V	
			LVDL<3:0> = 0101	2.43	2.77	3.10	V	
			LVDL<3:0> = 0110	2.53	2.87	3.21	V	
			LVDL<3:0> = 0111	2.70	3.07	3.43	V	
			LVDL<3:0> = 1000	2.96	3.36	3.77	V	
			LVDL<3:0> = 1001	3.14	3.57	4.00	V	
			LVDL<3:0> = 1010	3.23	3.67	4.11	V	
			LVDL<3:0> = 1011	3.41	3.87	4.34	V	
			LVDL<3:0> = 1100	3.58	4.07	4.56	V	
			LVDL<3:0> = 1101	3.76	4.28	4.79	V	
			LVDL<3:0> = 1110	4.04	4.60	5.15	V	

Legend: Shading of rows is to assist in readability of the table.

† Production tested at TAMB = 25°C. Specifications over temperature limits ensured by characterization.

© 2007 Microchip Technology Inc.

TABLE 26-4: LOW-VOLTAGE DETECT CHARACTERISTICS (CONTINUED)

PIC18LF2220/2320/4220/4320 (Industrial)				**Standard Operating Conditions (unless otherwise stated)** Operating temperature -40°C ≤ TA ≤ +85°C for industrial				
PIC18F2220/2320/4220/4320 (Industrial, Extended)				**Standard Operating Conditions (unless otherwise stated)** Operating temperature -40°C ≤ TA ≤ +85°C for industrial -40°C ≤ TA ≤ +125°C for extended				
Param No.	**Symbol**	**Characteristic**		**Min**	**Typ†**	**Max**	**Units**	**Conditions**
	VLVD	LVD Voltage on VDD Transition High-to-Low — Date codes above 0417xxx						
D420G		PIC18F2X20/4X20		Industrial (-10°C to +85°C)				
			LVDL<3:0> = 1101	3.93	4.28	4.62	V	
			LVDL<3:0> = 1110	4.23	4.60	4.96	V	
D420H		PIC18F2X20/4X20		Industrial (-40°C to -10°C)				
			LVDL<3:0> = 1101	3.76	4.28	4.79	V	Reserved
			LVDL<3:0> = 1110	4.04	4.60	5.15	V	
D420J		PIC18F2X20/4X20		Extended (-10°C to +85°C)				
			LVDL<3:0> = 1101	3.94	4.28	4.62	V	
			LVDL<3:0> = 1110	4.23	4.60	4.96	V	
D420K		PIC18F2X20/4X20		Extended (-40°C to -10°C, +85°C to +125°C)				
			LVDL<3:0> = 1101	3.77	4.28	4.79	V	Reserved
			LVDL<3:0> = 1110	4.05	4.60	5.15	V	

Legend: Shading of rows is to assist in readability of the table.

† Production tested at TAMB = 25°C. Specifications over temperature limits ensured by characterization.

26.4 AC (Timing) Characteristics

26.4.1 TIMING PARAMETER SYMBOLOGY

The timing parameter symbols have been created following one of the following formats:

1. TppS2ppS
2. TppS
3. TCC:ST (I^2C specifications only)
4. Ts (I^2C specifications only)

T			
F	Frequency	T	Time

Lowercase letters (pp) and their meanings:

pp			
cc	CCP1	osc	OSC1
ck	CLKO	rd	$\overline{RD}$
cs	$\overline{CS}$	rw	$\overline{RD}$ or $\overline{WR}$
di	SDI	sc	SCK
do	SDO	ss	$\overline{SS}$
dt	Data in	t0	T0CKI
io	I/O port	t1	T1CKI
mc	$\overline{MCLR}$	wr	$\overline{WR}$

Uppercase letters and their meanings:

S			
F	Fall	P	Period
H	High	R	Rise
I	Invalid (High-impedance)	V	Valid
L	Low	Z	High-impedance
I^2C only			
AA	output access	High	High
BUF	Bus free	Low	Low

TCC:ST (I^2C specifications only)

CC			
HD	Hold	SU	Setup
ST			
DAT	DATA input hold	STO	Stop condition
STA	Start condition		

© 2007 Microchip Technology Inc.

26.4.2 TIMING CONDITIONS

The temperature and voltages specified in Table 26-5 apply to all timing specifications unless otherwise noted. Figure 26-5 specifies the load conditions for the timing specifications.

Note: Because of space limitations, the generic terms “PIC18FXX20” and “PIC18LFXX20” are used throughout this section to refer to the PIC18F2220/2320/4220/4320 and PIC18LF2220/2320/4220/4320 families of devices specifically and only those devices.

TABLE 26-5: TEMPERATURE AND VOLTAGE SPECIFICATIONS – AC

AC CHARACTERISTICS	**Standard Operating Conditions (unless otherwise stated)** Operating temperature -40°C ≤ T_A ≤ +85°C for industrial -40°C ≤ T_A ≤ +125°C for extended Operating voltage V_{DD} range as described in DC spec **Section 26.1** and **Section 26.3**. LF parts operate up to industrial temperatures only.

FIGURE 26-5: LOAD CONDITIONS FOR DEVICE TIMING SPECIFICATIONS

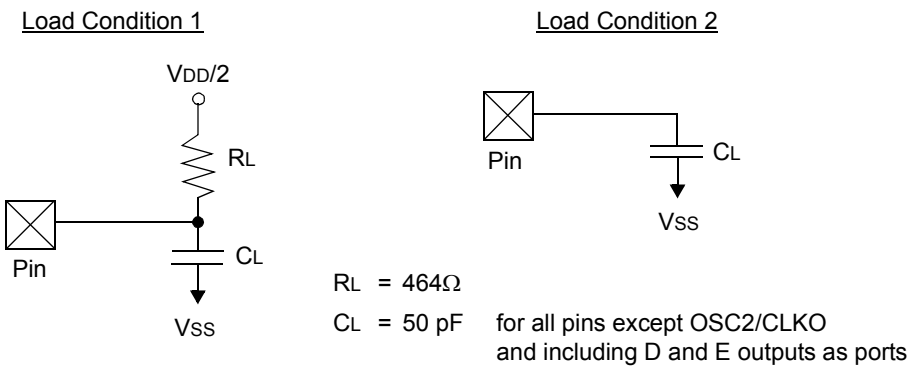

26.4.3 TIMING DIAGRAMS AND SPECIFICATIONS

FIGURE 26-6: EXTERNAL CLOCK TIMING (ALL MODES EXCEPT PLL)

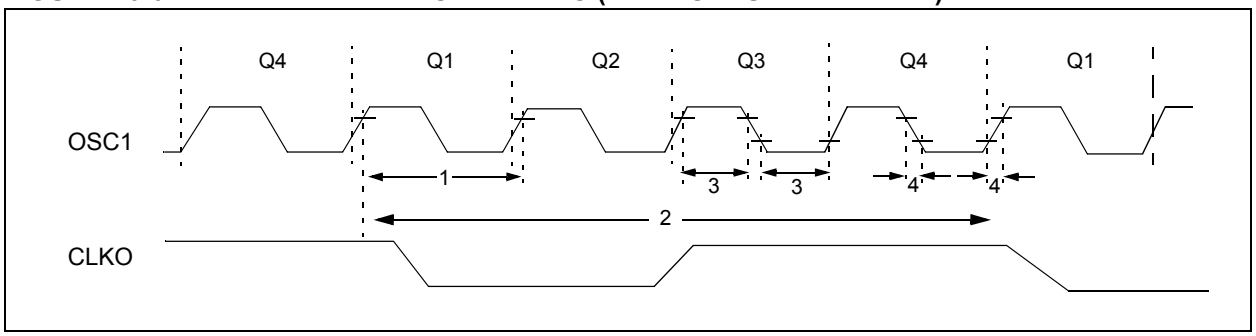

TABLE 26-6: EXTERNAL CLOCK TIMING REQUIREMENTS

Param. No.	Symbol	Characteristic	Min	Max	Units	Conditions
1A	FOSC	External CLKI Frequency(1)	DC	40	MHz	EC, ECIO (industrial)
			DC	25	MHz	EC, ECIO (extended)
		Oscillator Frequency(1)	DC	4	MHz	RC osc
			0.1	1	MHz	XT osc
			4	25	MHz	HS osc
			4	10	MHz	HS + PLL osc (industrial)
			4	6.25	MHz	HS + PLL osc (extended)
			5	33	kHz	LP Osc mode
1	TOSC	External CLKI Period(1)	25	—	ns	EC, ECIO (industrial)
			40	—	ns	EC, ECIO (extended)
		Oscillator Period(1)	250	—	ns	RC osc
			1	—	μs	XT osc
			40	250	ns	HS osc
			100	250	ns	HS + PLL osc (industrial)
			160	250	ns	HS + PLL osc (extended)
			30	—	μs	LP osc
2	TCY	Instruction Cycle Time(1)	100	—	ns	TCY = 4/FOSC (industrial)
			160	—	ns	TCY = 4/FOSC (extended)
3	TOSL, TOSH	External Clock in (OSC1) High or Low Time	30	—	ns	XT osc
			2.5	—	μs	LP osc
			10	—	ns	HS osc
4	TOSR, TOSF	External Clock in (OSC1) Rise or Fall Time	—	20	ns	XT osc
			—	50	ns	LP osc
			—	7.5	ns	HS osc

Note 1: Instruction cycle period (TCY) equals four times the input oscillator time base period for all configurations except PLL. All specified values are based on characterization data for that particular oscillator type under standard operating conditions with the device executing code. Exceeding these specified limits may result in an unstable oscillator operation and/or higher than expected current consumption. All devices are tested to operate at “min.” values with an external clock applied to the OSC1/CLKI pin. When an external clock input is used, the “max.” cycle time limit is “DC” (no clock) for all devices.

© 2007 Microchip Technology Inc.

TABLE 26-7: PLL CLOCK TIMING SPECIFICATIONS (V_{DD} = 4.2V TO 5.5V)

Param No.	Sym	Characteristic	Min	Typ†	Max	Units	Conditions
F10	F_{OSC}	Oscillator Frequency Range	4	—	10	MHz	HS mode only
F11	F_{SYS}	On-Chip VCO System Frequency	16	—	40	MHz	HS mode only
F12	t_{PLL}	PLL Start-up Time (Lock Time)	—	—	2	ms	
F13	Δ_{CLK}	CLKO Stability (Jitter)	-2	—	+2	%	

† Data in "Typ" column is at 5V, 25°C unless otherwise stated. These parameters are for design guidance only and are not tested.

TABLE 26-8: INTERNAL RC ACCURACY: PIC18F2220/2320/4220/4320 (Industrial)
PIC18LF2220/2320/4220/4320 (Industrial, Extended)

PIC18LF1220/1320 (Industrial)		**Standard Operating Conditions (unless otherwise stated)** Operating temperature -40°C ≤ TA ≤ +85°C for industrial						
PIC18F1220/1320 (Industrial, Extended)		**Standard Operating Conditions (unless otherwise stated)** Operating temperature -40°C ≤ TA ≤ +85°C for industrial -40°C ≤ TA ≤ +125°C for extended						
Param No.	**Device**	**Min**	**Typ**	**Max**	**Units**	**Conditions**		
	INTOSC Accuracy @ Freq = 8 MHz, 4 MHz, 2 MHz, 1 MHz, 500 kHz, 250 kHz, 125 kHz(1)							
F14	PIC18LF2220/2320/4220/4320	-2	+/-1	2	%	+25°C	VDD = 2.7-3.3V	
F15		-5	—	5	%	-10°C to +85°C	VDD = 2.7-3.3V	
F16		-10	—	10	%	-40°C to +85°C	VDD = 2.7-3.3V	
F17	PIC18F2220/2320/4220/4320	-2	+/-1	2	%	+25°C	VDD = 4.5-5.5V	
F18		-5	—	5	%	-10°C to +85°C	VDD = 4.5-5.5V	
F19		-10	—	10	%	-40°C to +85°C	VDD = 4.5-5.5V	
	INTRC Accuracy @ Freq = 31 kHz(2)							
F20	PIC18LF2220/2320/4220/4320	26.562	—	35.938	kHz	-40°C to +85°C	VDD = 2.7-3.3V	
F21	PIC18F2220/2320/4220/4320	26.562	—	35.938	kHz	-40°C to +85°C	VDD = 4.5-5.5V	

Legend: Shading of rows is to assist in readability of the table.

Note 1: Frequency calibrated at 25°C. OSCTUNE register can be used to compensate for temperature drift.

2: INTRC frequency after calibration.

3: Change of INTRC frequency as VDD changes.

FIGURE 26-7: CLKO AND I/O TIMING

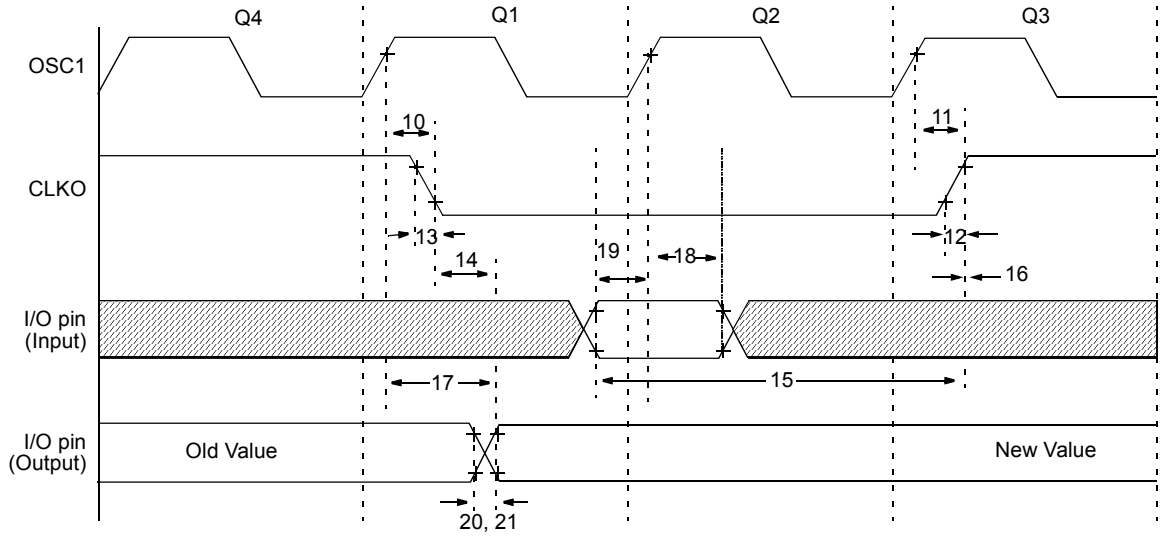

Note: Refer to Figure 26-5 for load conditions.

TABLE 26-9: CLKO AND I/O TIMING REQUIREMENTS

Param No.	Symbol	Characteristic		Min	Typ	Max	Units	Conditions
10	TosH2ckL	OSC1 ↑ to CLKO ↓		—	75	200	ns	**(1)**
11	TosH2ckH	OSC1 ↑ to CLKO ↑		—	75	200	ns	**(1)**
12	TckR	CLKO Rise Time		—	35	100	ns	**(1)**
13	TckF	CLKO Fall Time		—	35	100	ns	**(1)**
14	TckL2ioV	CLKO ↓ to Port Out Valid		—	—	0.5 TCY + 20	ns	**(1)**
15	TioV2ckH	Port In Valid before CLKO ↑		0.25 TCY + 25	—	—	ns	**(1)**
16	TckH2ioI	Port In Hold after CLKO ↑		0	—	—	ns	**(1)**
17	TosH2ioV	OSC1↑ (Q1 cycle) to Port Out Valid		—	50	150	ns	
18	TosH2ioI	OSC1↑ (Q2 cycle) to Port Input Invalid (I/O in hold time)	PIC18**F**XX20	100	—	—	ns	
18A			PIC18**LF**XX20	200	—	—	ns	
19	TioV2osH	Port Input Valid to OSC1↑ (I/O in setup time)		0	—	—	ns	
20	TioR	Port Output Rise Time	PIC18**F**XX20	—	10	25	ns	
20A			PIC18**LF**XX20	—	—	60	ns	
21	TioF	Port Output Fall Time	PIC18**F**XX20	—	10	25	ns	
21A			PIC18**LF**XX20	—	—	60	ns	

Note 1: Measurements are taken in RC mode, where CLKO output is 4 x TOSC.

© 2007 Microchip Technology Inc.

FIGURE 26-8: RESET, WATCHDOG TIMER, OSCILLATOR START-UP TIMER AND POWER-UP TIMER TIMING

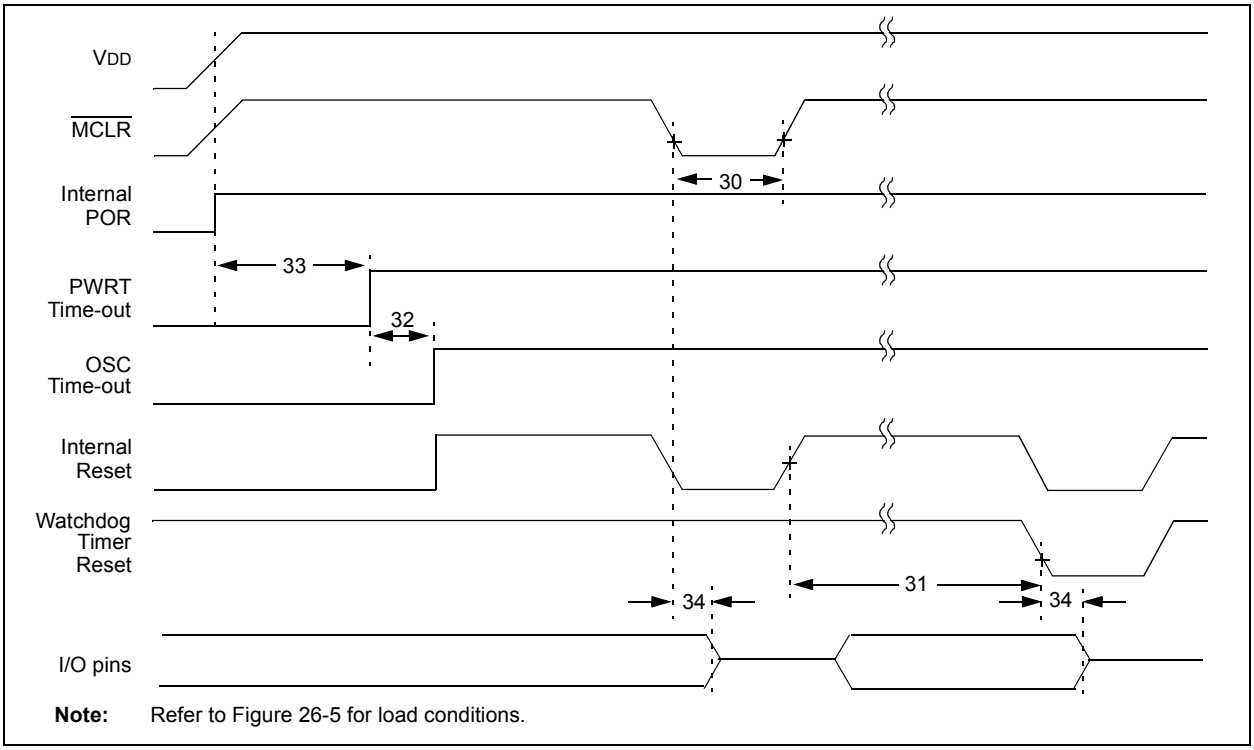

Note: Refer to Figure 26-5 for load conditions.

FIGURE 26-9: BROWN-OUT RESET TIMING

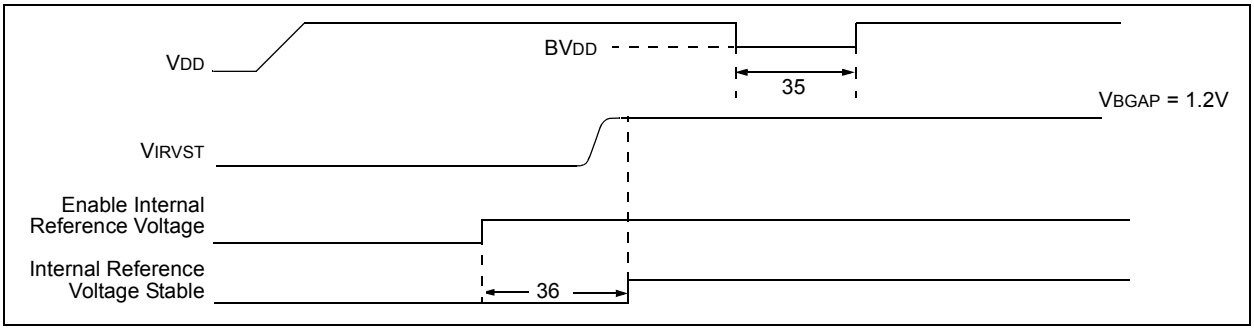

TABLE 26-10: RESET, WATCHDOG TIMER, OSCILLATOR START-UP TIMER, POWER-UP TIMER AND BROWN-OUT RESET REQUIREMENTS

Param. No.	Symbol	Characteristic	Min	Typ	Max	Units	Conditions
30	TMCL	$\overline{MCLR}$ Pulse Width (low)	2	—	—	μs	
31	TWDT	Watchdog Timer Time-out Period (no postscaler)	3.48	4.00	4.71	ms	
32	TOST	Oscillation Start-up Timer Period	1024 TOSC	—	1024 TOSC	—	TOSC = OSC1 period
33	TPWRT	Power-up Timer Period	57.0	65.5	77.2	ms	
34	TIOZ	I/O High-Impedance from $\overline{MCLR}$ Low or Watchdog Timer Reset	—	2	—	μs	
35	TBOR	Brown-out Reset Pulse Width	200	—	—	μs	VDD ≤ BVDD (see D005A)
36	TIVRST	Time for Internal Reference Voltage to become stable	—	20	50	μs	
37	TLVD	Low-Voltage Detect Pulse Width	200	—	—	μs	VDD ≤ VLVD

FIGURE 26-10: TIMER0 AND TIMER1 EXTERNAL CLOCK TIMINGS

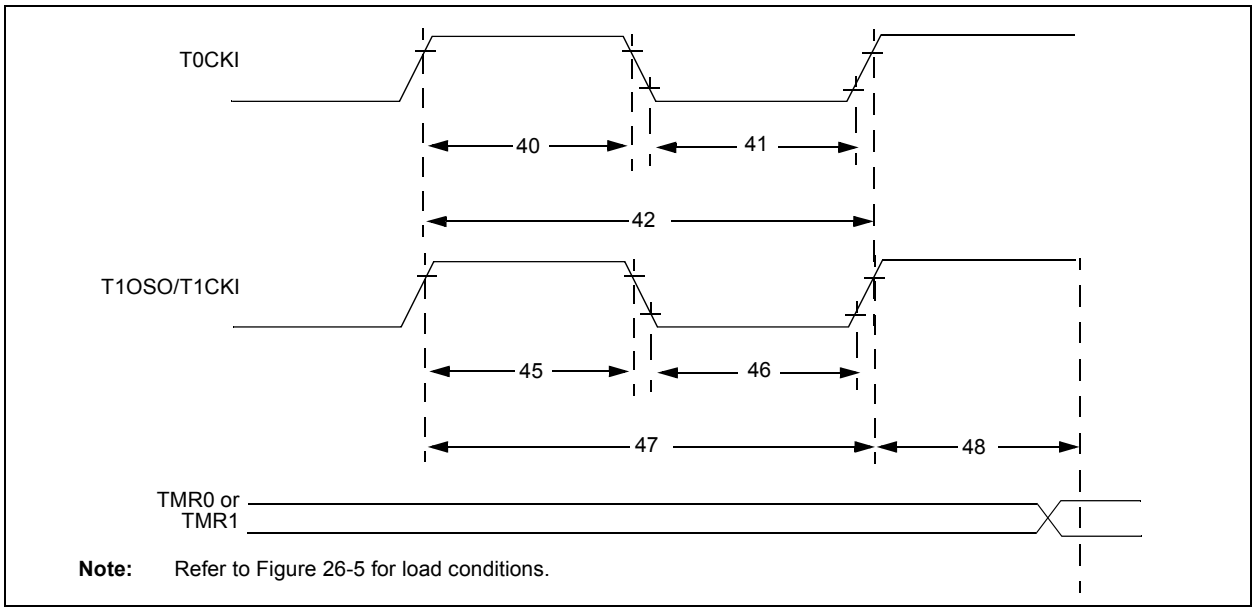

Note: Refer to Figure 26-5 for load conditions.

© 2007 Microchip Technology Inc.

TABLE 26-11: TIMER0 AND TIMER1 EXTERNAL CLOCK REQUIREMENTS

Param No.	Symbol	Characteristic			Min	Max	Units	Conditions
40	TT0H	T0CKI High Pulse Width		No prescaler	0.5 TCY + 20	—	ns	
				With prescaler	10	—	ns	
41	TT0L	T0CKI Low Pulse Width		No prescaler	0.5 TCY + 20	—	ns	
				With prescaler	10	—	ns	
42	TT0P	T0CKI Period		No prescaler	TCY + 10	—	ns	
				With prescaler	Greater of: 20 ns or $\frac{T_{CY} + 40}{N}$	—	ns	N = prescale value (1, 2, 4,..., 256)
45	TT1H	T1CKI High Time	Synchronous, no prescaler		0.5 TCY + 20	—	ns	
			Synchronous, with prescaler	PIC18**F**XX20	10	—	ns	
				PIC18**LF**XX20	25	—	ns	
			Asynchronous	PIC18**F**XX20	30	—	ns	
				PIC18**LF**XX20	50	—	ns	
46	TT1L	T1CKI Low Time	Synchronous, no prescaler		0.5 TCY + 5	—	ns	
			Synchronous, with prescaler	PIC18**F**XX20	10	—	ns	
				PIC18**LF**XX20	25	—	ns	
			Asynchronous	PIC18**F**XX20	30	—	ns	
				PIC18**LF**XX20	50	—	ns	
47	TT1P	T1CKI Input Period	Synchronous		Greater of: 20 ns or $\frac{T_{CY} + 40}{N}$	—	ns	N = prescale value (1, 2, 4, 8)
			Asynchronous		60	—	ns	
	FT1	T1CKI Oscillator Input Frequency Range			DC	50	kHz	
48	TCKE2TMRI	Delay from External T1CKI Clock Edge to Timer Increment			2 TOSC	7 TOSC	—	

FIGURE 26-11: CAPTURE/COMPARE/PWM TIMINGS (ALL CCP MODULES)

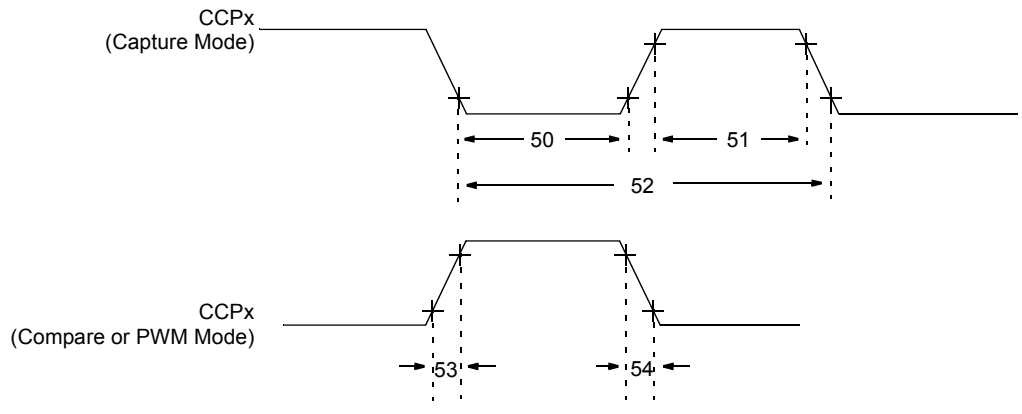

Note: Refer to Figure 26-5 for load conditions.

TABLE 26-12: CAPTURE/COMPARE/PWM REQUIREMENTS (ALL CCP MODULES)

Param No.	Symbol	Characteristic			Min	Max	Units	Conditions
50	TccL	CCPx Input Low Time	No prescaler		0.5 TCY + 20	—	ns	
			With prescaler	PIC18**F**XX20	10	—	ns	
				PIC18**LF**XX20	20	—	ns	
51	TccH	CCPx Input High Time	No prescaler		0.5 TCY + 20	—	ns	
			With prescaler	PIC18**F**XX20	10	—	ns	
				PIC18**LF**XX20	20	—	ns	
52	TccP	CCPx Input Period			$\frac{3\ T_{CY} + 40}{N}$	—	ns	N = prescale value (1,4 or 16)
53	TccR	CCPx Output Fall Time		PIC18**F**XX20	—	25	ns	
				PIC18**LF**XX20	—	45	ns	
54	TccF	CCPx Output Fall Time		PIC18**F**XX20	—	25	ns	
				PIC18**LF**XX20	—	45	ns	

FIGURE 26-12: PARALLEL SLAVE PORT TIMING (PIC18F4X20)

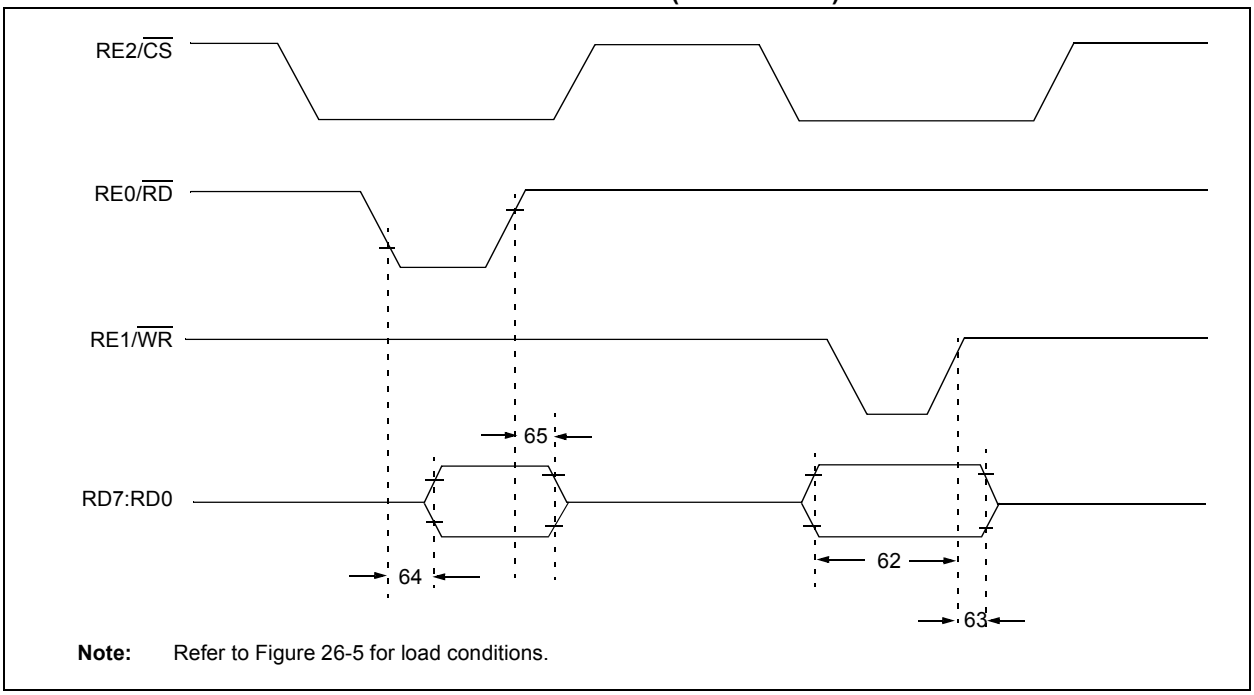

Note: Refer to Figure 26-5 for load conditions.

© 2007 Microchip Technology Inc.

TABLE 26-13: PARALLEL SLAVE PORT REQUIREMENTS (PIC18F4X20)

Param. No.	Symbol	Characteristic		Min	Max	Units	Conditions
62	TDTV2WRH	Data In Valid Before $\overline{WR}$ ↑ or $\overline{CS}$ ↑ (setup time)		20	—	ns	
63	TWRH2DTI	$\overline{WR}$ ↑ or $\overline{CS}$ ↑ to Data–In Invalid (hold time)	PIC18**F**XX20	20	—	ns	
			PIC18**LF**XX20	35	—	ns	
64	TRDL2DTV	$\overline{RD}$ ↓ and $\overline{CS}$ ↓ to Data–Out Valid		—	80	ns	
65	TRDH2DTI	$\overline{RD}$ ↑ or $\overline{CS}$ ↓ to Data–Out Invalid		10	30	ns	
66	TIBFINH	Inhibit of the IBF Flag bit being Cleared from $\overline{WR}$ ↑ or $\overline{CS}$ ↑		—	3 TCY		

FIGURE 26-13: EXAMPLE SPI MASTER MODE TIMING (CKE = 0)

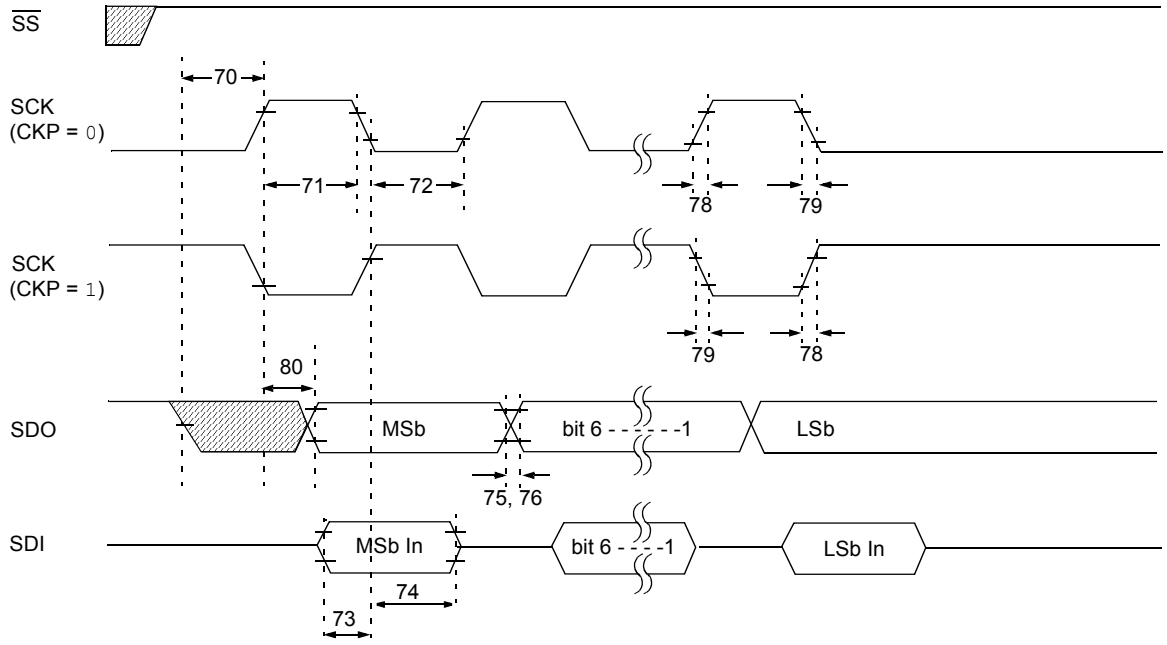

Note: Refer to Figure 26-5 for load conditions.

TABLE 26-14: EXAMPLE SPI MODE REQUIREMENTS (MASTER MODE, CKE = 0)

Param No.	Symbol	Characteristic		Min	Max	Units	Conditions
70	TssL2scH, TssL2scL	$\overline{SS}$ ↓ to SCK ↓ or SCK ↑ Input		Tcy	—	ns	
71	TscH	SCK Input High Time (Slave mode)	Continuous	1.25 Tcy + 30	—	ns	
71A			Single Byte	40	—	ns	**(Note 1)**
72	TscL	SCK Input Low Time (Slave mode)	Continuous	1.25 Tcy + 30	—	ns	
72A			Single Byte	40	—	ns	**(Note 1)**
73	TdiV2scH, TdiV2scL	Setup Time of SDI Data Input to SCK Edge		100	—	ns	
73A	Tb2b	Last Clock Edge of Byte 1 to the 1st Clock Edge of Byte 2		1.5 Tcy + 40	—	ns	**(Note 2)**
74	TscH2diL, TscL2diL	Hold Time of SDI Data Input to SCK Edge		100	—	ns	
75	TdoR	SDO Data Output Rise Time	PIC18**F**XX20	—	25	ns	
			PIC18**LF**XX20	—	45	ns	
76	TdoF	SDO Data Output Fall Time		—	25	ns	
78	TscR	SCK Output Rise Time (Master mode)	PIC18**F**XX20	—	25	ns	
			PIC18**LF**XX20	—	45	ns	
79	TscF	SCK Output Fall Time (Master mode)		—	25	ns	
80	TscH2doV, TscL2doV	SDO Data Output Valid after SCK Edge	PIC18**F**XX20	—	50	ns	
			PIC18**LF**XX20	—	100	ns	

Note 1: Requires the use of Parameter # 73A.

2: Only if Parameter # 71A and # 72A are used.

FIGURE 26-14: EXAMPLE SPI MASTER MODE TIMING (CKE = 1)

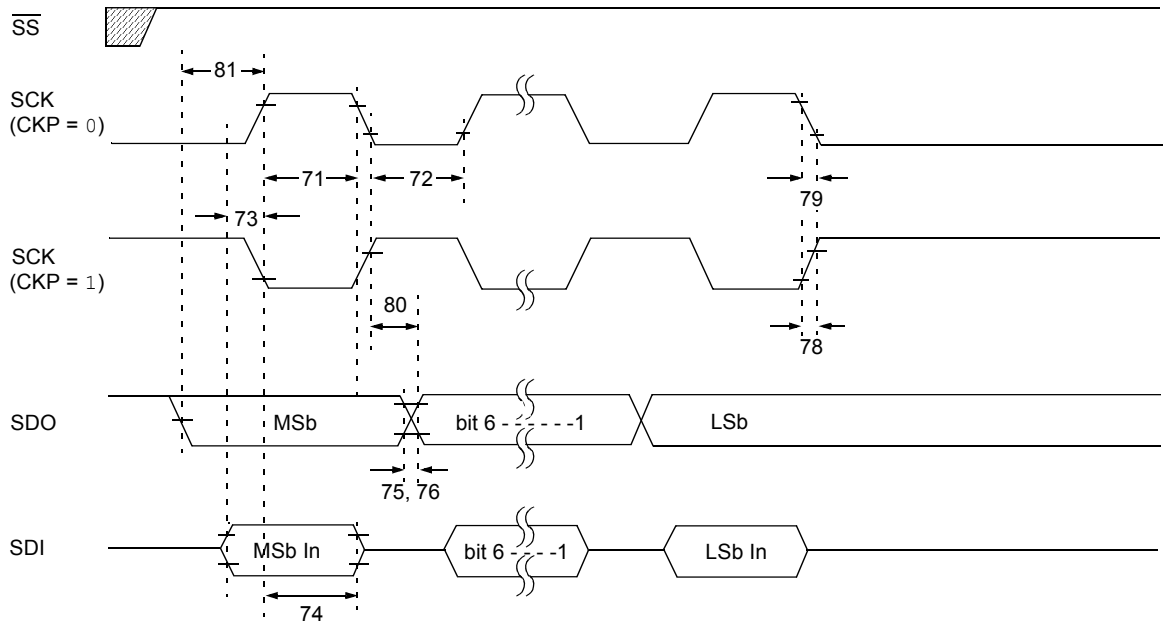

Note: Refer to Figure 26-5 for load conditions.

© 2007 Microchip Technology Inc.

TABLE 26-15: EXAMPLE SPI MODE REQUIREMENTS (MASTER MODE, CKE = 1)

Param. No.	Symbol	Characteristic		Min	Max	Units	Conditions
71	TscH	SCK Input High Time (Slave mode)	Continuous	1.25 Tcy + 30	—	ns	
71A			Single Byte	40	—	ns	**(Note 1)**
72	TscL	SCK Input Low Time (Slave mode)	Continuous	1.25 Tcy + 30	—	ns	
72A			Single Byte	40	—	ns	**(Note 1)**
73	TdiV2scH, TdiV2scL	Setup Time of SDI Data Input to SCK Edge		100	—	ns	
73A	Tb2b	Last Clock Edge of Byte 1 to the 1st Clock Edge of Byte 2		1.5 Tcy + 40	—	ns	**(Note 2)**
74	TscH2diL, TscL2diL	Hold Time of SDI Data Input to SCK Edge		100	—	ns	
75	TdoR	SDO Data Output Rise Time	PIC18**F**XX20	—	25	ns	
			PIC18**LF**XX20		45	ns	
76	TdoF	SDO Data Output Fall Time		—	25	ns	
78	TscR	SCK Output Rise Time (Master mode)	PIC18**F**XX20	—	25	ns	
			PIC18**LF**XX20		45	ns	
79	TscF	SCK Output Fall Time (Master mode)		—	25	ns	
80	TscH2doV, TscL2doV	SDO Data Output Valid after SCK Edge	PIC18**F**XX20	—	50	ns	
			PIC18**LF**XX20		100	ns	
81	TdoV2scH, TdoV2scL	SDO Data Output Setup to SCK Edge		Tcy	—	ns	

Note 1: Requires the use of Parameter # 73A.

2: Only if Parameter # 71A and # 72A are used.

FIGURE 26-15: EXAMPLE SPI SLAVE MODE TIMING (CKE = 0)

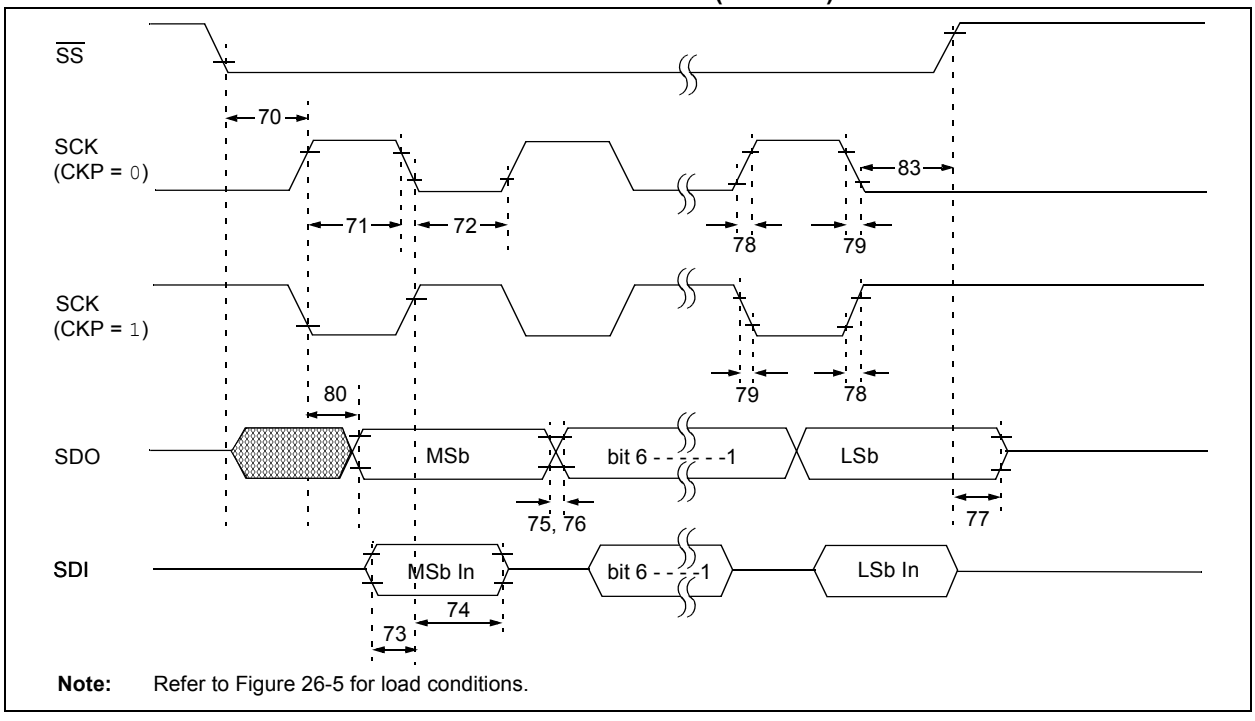

Note: Refer to Figure 26-5 for load conditions.

TABLE 26-16: EXAMPLE SPI MODE REQUIREMENTS (SLAVE MODE TIMING, CKE = 0)

Param No.	Symbol	Characteristic		Min	Max	Units	Conditions
70	TssL2scH, TssL2scL	$\overline{SS}$ ↓ to SCK ↓ or SCK ↑ Input		Tcy	—	ns	
71	TscH	SCK Input High Time (Slave mode)	Continuous	1.25 Tcy + 30	—	ns	
71A			Single Byte	40	—	ns	**(Note 1)**
72	TscL	SCK Input Low Time (Slave mode)	Continuous	1.25 Tcy + 30	—	ns	
72A			Single Byte	40	—	ns	**(Note 1)**
73	TdiV2scH, TdiV2scL	Setup Time of SDI Data Input to SCK Edge		100	—	ns	
73A	Tb2b	Last Clock Edge of Byte 1 to the First Clock Edge of Byte 2		1.5 Tcy + 40	—	ns	**(Note 2)**
74	TscH2diL, TscL2diL	Hold Time of SDI Data Input to SCK Edge		100	—	ns	
75	TdoR	SDO Data Output Rise Time	PIC18**F**XX20	—	25	ns	
			PIC18**LF**XX20		45	ns	
76	TdoF	SDO Data Output Fall Time		—	25	ns	
77	TssH2doZ	$\overline{SS}$ ↑ to SDO Output High-Impedance		10	50	ns	
78	TscR	SCK Output Rise Time (Master mode)	PIC18**F**XX20	—	25	ns	
			PIC18**LF**XX20		45	ns	
79	TscF	SCK Output Fall Time (Master mode)		—	25	ns	
80	TscH2doV, TscL2doV	SDO Data Output Valid after SCK Edge	PIC18**F**XX20	—	50	ns	
			PIC18**LF**XX20		100	ns	
83	TscH2ssH, TscL2ssH	$\overline{SS}$ ↑ after SCK Edge		1.5 Tcy + 40	—	ns	

Note 1: Requires the use of Parameter # 73A.
2: Only if Parameter # 71A and # 72A are used.

FIGURE 26-16: EXAMPLE SPI SLAVE MODE TIMING (CKE = 1)

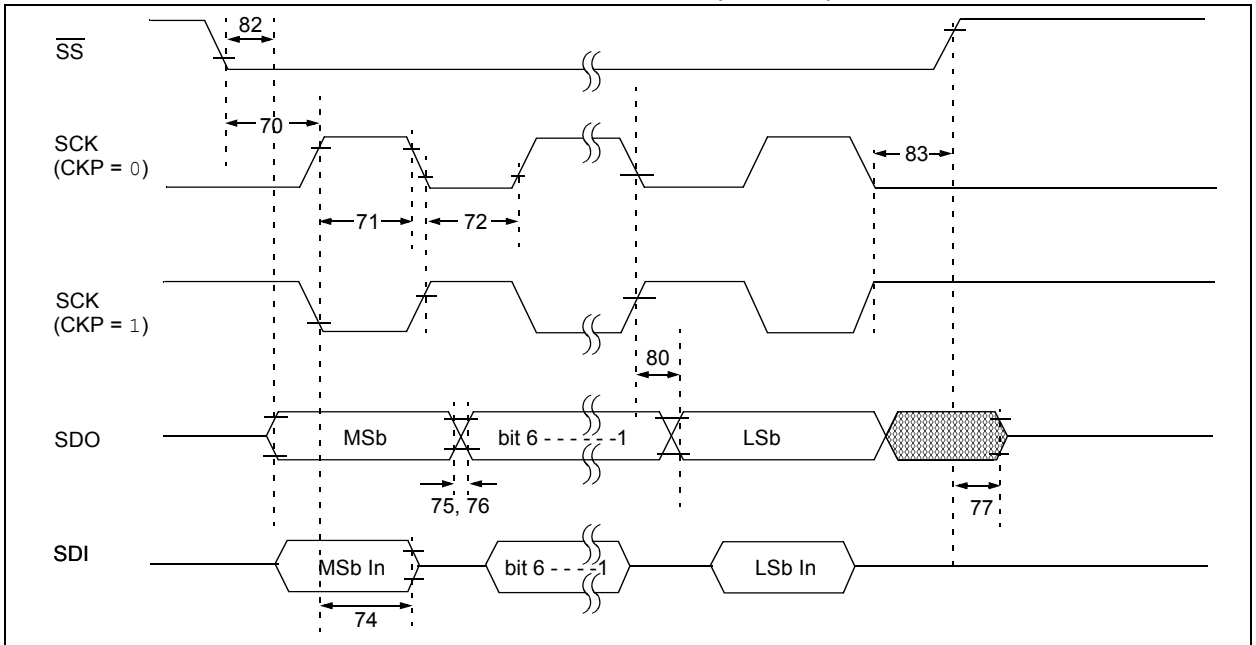

Note: Refer to Figure 26-5 for load conditions.

© 2007 Microchip Technology Inc.

TABLE 26-17: EXAMPLE SPI SLAVE MODE REQUIREMENTS (CKE = 1)

Param No.	Symbol	Characteristic		Min	Max	Units	Conditions
70	TssL2scH, TssL2scL	$\overline{SS}$ ↓ to SCK ↓ or SCK ↑ Input		Tcy	—	ns	
71	TscH	SCK Input High Time (Slave mode)	Continuous	1.25 Tcy + 30	—	ns	
71A			Single Byte	40	—	ns	**(Note 1)**
72	TscL	SCK Input Low Time (Slave mode)	Continuous	1.25 Tcy + 30	—	ns	
72A			Single Byte	40	—	ns	**(Note 1)**
73A	Tb2b	Last Clock Edge of Byte 1 to the First Clock Edge of Byte 2		1.5 Tcy + 40	—	ns	**(Note 2)**
74	TscH2diL, TscL2diL	Hold Time of SDI Data Input to SCK Edge		100	—	ns	
75	TdoR	SDO Data Output Rise Time	PIC18**F**XX20	—	25	ns	
			PIC18**LF**XX20		45	ns	
76	TdoF	SDO Data Output Fall Time		—	25	ns	
77	TssH2doZ	$\overline{SS}$↑ to SDO Output High-Impedance		10	50	ns	
78	TscR	SCK Output Rise Time (Master mode)	PIC18**F**XX20	—	25	ns	
			PIC18**LF**XX20	—	45	ns	
79	TscF	SCK Output Fall Time (Master mode)		—	25	ns	
80	TscH2doV, TscL2doV	SDO Data Output Valid after SCK Edge	PIC18**F**XX20	—	50	ns	
			PIC18**LF**XX20	—	100	ns	
82	TssL2doV	SDO Data Output Valid after $\overline{SS}$ ↓ Edge	PIC18**F**XX20	—	50	ns	
			PIC18**LF**XX20	—	100	ns	
83	TscH2ssH, TscL2ssH	$\overline{SS}$ ↑ after SCK edge		1.5 Tcy + 40	—	ns	

Note 1: Requires the use of Parameter # 73A.
2: Only if Parameter # 71A and # 72A are used.

FIGURE 26-17: I²C™ BUS START/STOP BITS TIMING

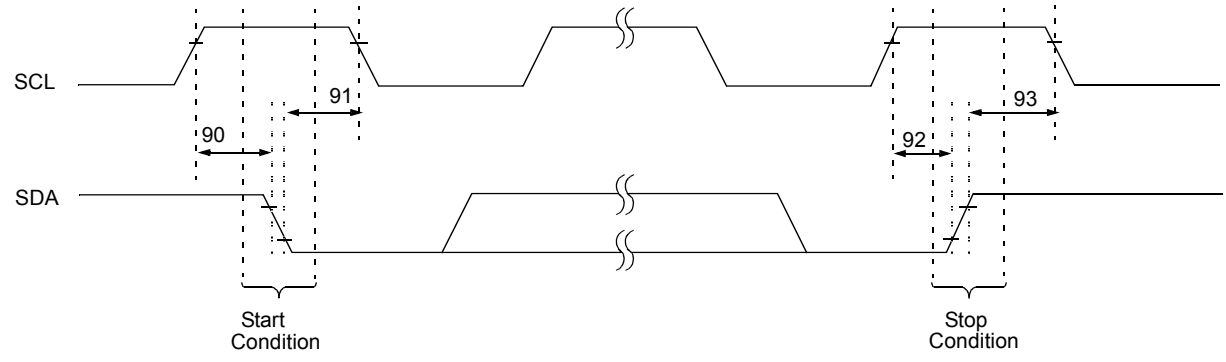

Note: Refer to Figure 26-5 for load conditions.

TABLE 26-18: I²C™ BUS START/STOP BITS REQUIREMENTS (SLAVE MODE)

Param. No.	Symbol	Characteristic		Min	Max	Units	Conditions
90	TSU:STA	Start Condition Setup Time	100 kHz mode	4700	—	ns	Only relevant for Repeated Start condition
			400 kHz mode	600	—		
91	THD:STA	Start Condition Hold Time	100 kHz mode	4000	—	ns	After this period, the first clock pulse is generated
			400 kHz mode	600	—		
92	TSU:STO	Stop Condition Setup Time	100 kHz mode	4700	—	ns	
			400 kHz mode	600	—		
93	THD:STO	Stop Condition Hold Time	100 kHz mode	4000	—	ns	
			400 kHz mode	600	—		

FIGURE 26-18: I²C™ BUS DATA TIMING

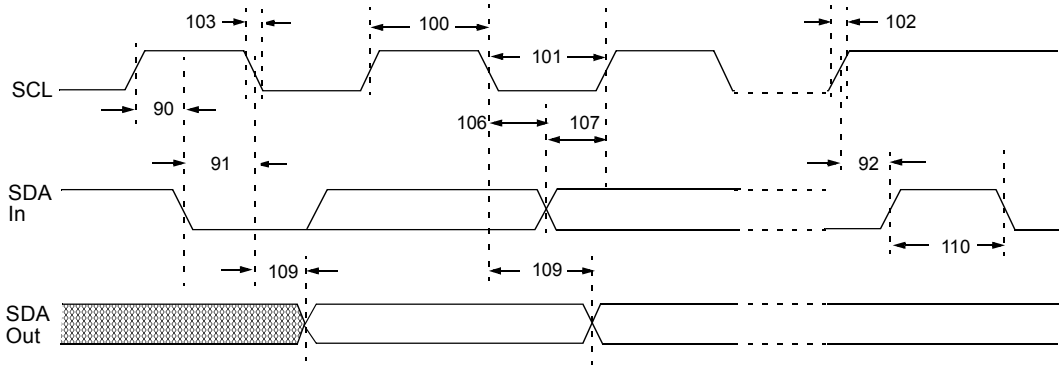

Note: Refer to Figure 26-5 for load conditions.

© 2007 Microchip Technology Inc.

TABLE 26-19: I²C™ BUS DATA REQUIREMENTS (SLAVE MODE)

Param. No.	Symbol	Characteristic		Min	Max	Units	Conditions
100	THIGH	Clock High Time	100 kHz mode	4.0	—	μs	PIC18FXX20 must operate at a minimum of 1.5 MHz
			400 kHz mode	0.6	—	μs	PIC18FXX20 must operate at a minimum of 10 MHz
			MSSP module	1.5 TCY	—		
101	TLOW	Clock Low Time	100 kHz mode	4.7	—	μs	PIC18FXX20 must operate at a minimum of 1.5 MHz
			400 kHz mode	1.3	—	μs	PIC18FXX20 must operate at a minimum of 10 MHz
			MSSP module	1.5 TCY	—		
102	TR	SDA and SCL Rise Time	100 kHz mode	—	1000	ns	
			400 kHz mode	20 + 0.1 CB	300	ns	CB is specified to be from 10 to 400 pF
103	TF	SDA and SCL Fall Time	100 kHz mode	—	300	ns	
			400 kHz mode	20 + 0.1 CB	300	ns	CB is specified to be from 10 to 400 pF
90	TSU:STA	Start Condition Setup Time	100 kHz mode	4.7	—	μs	Only relevant for Repeated Start condition
			400 kHz mode	0.6	—	μs	
91	THD:STA	Start Condition Hold Time	100 kHz mode	4.0	—	μs	After this period, the first clock pulse is generated
			400 kHz mode	0.6	—	μs	
106	THD:DAT	Data Input Hold Time	100 kHz mode	0	—	ns	
			400 kHz mode	0	0.9	μs	
107	TSU:DAT	Data Input Setup Time	100 kHz mode	250	—	ns	**(Note 2)**
			400 kHz mode	100	—	ns	
92	TSU:STO	Stop Condition Setup Time	100 kHz mode	4.7	—	μs	
			400 kHz mode	0.6	—	μs	
109	TAA	Output Valid from Clock	100 kHz mode	—	3500	ns	**(Note 1)**
			400 kHz mode	—	—	ns	
110	TBUF	Bus Free Time	100 kHz mode	4.7	—	μs	Time the bus must be free before a new transmission can start
			400 kHz mode	1.3	—	μs	
D102	CB	Bus Capacitive Loading		—	400	pF	

Note 1: As a transmitter, the device must provide this internal minimum delay time to bridge the undefined region (min. 300 ns) of the falling edge of SCL to avoid unintended generation of Start or Stop conditions.

2: A fast mode I²C bus device can be used in a standard mode I²C bus system but the requirement, TSU:DAT ≥ 250 ns, must then be met. This will automatically be the case if the device does not stretch the LOW period of the SCL signal. If such a device does stretch the LOW period of the SCL signal, it must output the next data bit to the SDA line, TR max. + TSU:DAT = 1000 + 250 = 1250 ns (according to the standard mode I²C bus specification), before the SCL line is released.

FIGURE 26-19: MASTER SSP I²C™ BUS START/STOP BITS TIMING WAVEFORMS

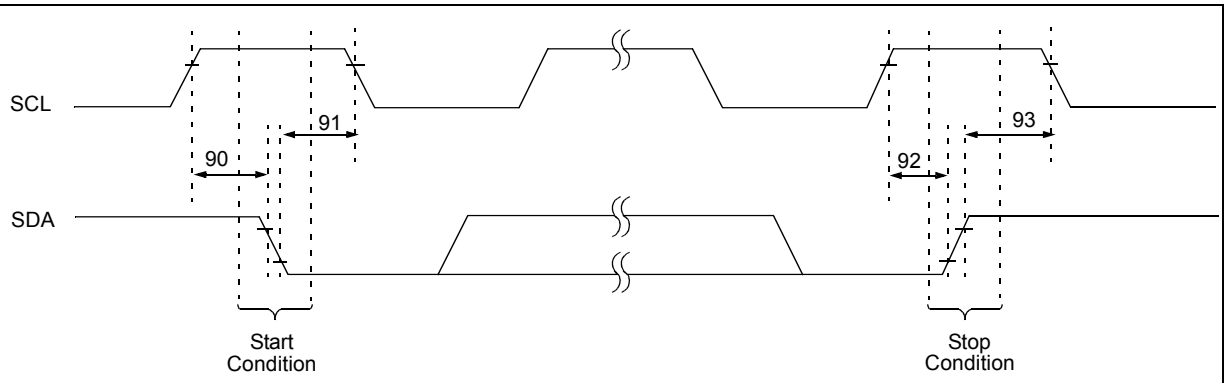

Note: Refer to Figure 26-5 for load conditions.

TABLE 26-20: MASTER SSP I²C™ BUS START/STOP BITS REQUIREMENTS

Param. No.	Symbol	Characteristic		Min	Max	Units	Conditions
90	TSU:STA	Start condition Setup time	100 kHz mode	2(TOSC)(BRG + 1)	—	ns	Only relevant for Repeated Start condition
			400 kHz mode	2(TOSC)(BRG + 1)	—		
			1 MHz mode(1)	2(TOSC)(BRG + 1)	—		
91	THD:STA	Start condition Hold time	100 kHz mode	2(TOSC)(BRG + 1)	—	ns	After this period, the first clock pulse is generated
			400 kHz mode	2(TOSC)(BRG + 1)	—		
			1 MHz mode(1)	2(TOSC)(BRG + 1)	—		
92	TSU:STO	Stop condition Setup time	100 kHz mode	2(TOSC)(BRG + 1)	—	ns	
			400 kHz mode	2(TOSC)(BRG + 1)	—		
			1 MHz mode(1)	2(TOSC)(BRG + 1)	—		
93	THD:STO	Stop condition Hold time	100 kHz mode	2(TOSC)(BRG + 1)	—	ns	
			400 kHz mode	2(TOSC)(BRG + 1)	—		
			1 MHz mode(1)	2(TOSC)(BRG + 1)	—		

Note 1: Maximum pin capacitance = 10 pF for all I²C pins.

FIGURE 26-20: MASTER SSP I²C™ BUS DATA TIMING

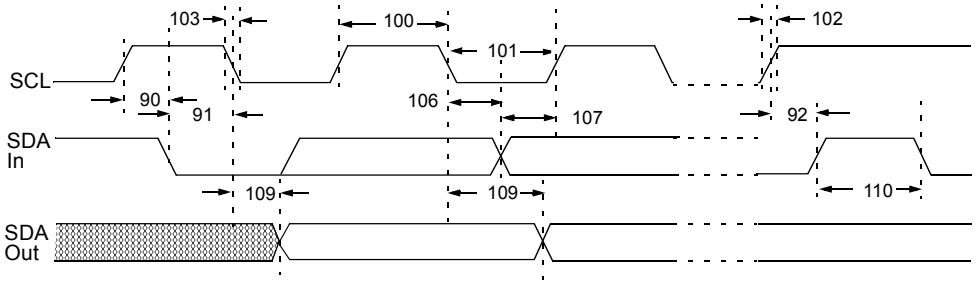

Note: Refer to Figure 26-5 for load conditions.

© 2007 Microchip Technology Inc.

TABLE 26-21: MASTER SSP I²C™ BUS DATA REQUIREMENTS

Param. No.	Symbol	Characteristic		Min	Max	Units	Conditions
100	THIGH	Clock High Time	100 kHz mode	2(TOSC)(BRG + 1)	—	ms	
			400 kHz mode	2(TOSC)(BRG + 1)	—	ms	
			1 MHz mode(1)	2(TOSC)(BRG + 1)	—	ms	
101	TLOW	Clock Low Time	100 kHz mode	2(TOSC)(BRG + 1)	—	ms	
			400 kHz mode	2(TOSC)(BRG + 1)	—	ms	
			1 MHz mode(1)	2(TOSC)(BRG + 1)	—	ms	
102	TR	SDA and SCL Rise Time	100 kHz mode	—	1000	ns	CB is specified to be from 10 to 400 pF
			400 kHz mode	20 + 0.1 CB	300	ns	
			1 MHz mode(1)	—	300	ns	
103	TF	SDA and SCL Fall Time	100 kHz mode	—	300	ns	CB is specified to be from 10 to 400 pF
			400 kHz mode	20 + 0.1 CB	300	ns	
			1 MHz mode(1)	—	100	ns	
90	TSU:STA	Start Condition Setup Time	100 kHz mode	2(TOSC)(BRG + 1)	—	ms	Only relevant for Repeated Start condition
			400 kHz mode	2(TOSC)(BRG + 1)	—	ms	
			1 MHz mode(1)	2(TOSC)(BRG + 1)	—	ms	
91	THD:STA	Start Condition Hold Time	100 kHz mode	2(TOSC)(BRG + 1)	—	ms	After this period, the first clock pulse is generated
			400 kHz mode	2(TOSC)(BRG + 1)	—	ms	
			1 MHz mode(1)	2(TOSC)(BRG + 1)	—	ms	
106	THD:DAT	Data Input Hold Time	100 kHz mode	0	—	ns	
			400 kHz mode	0	0.9	ms	
			1 MHz mode(1)	TBD	—	ns	
107	TSU:DAT	Data Input Setup Time	100 kHz mode	250	—	ns	**(Note 2)**
			400 kHz mode	100	—	ns	
			1 MHz mode(1)	TBD	—	ns	
92	TSU:STO	Stop Condition Setup Time	100 kHz mode	2(TOSC)(BRG + 1)	—	ms	
			400 kHz mode	2(TOSC)(BRG + 1)	—	ms	
			1 MHz mode(1)	2(TOSC)(BRG + 1)	—	ms	
109	TAA	Output Valid from Clock	100 kHz mode	—	3500	ns	
			400 kHz mode	—	1000	ns	
			1 MHz mode(1)	—	—	ns	
110	TBUF	Bus Free Time	100 kHz mode	4.7	—	ms	Time the bus must be free before a new transmission can start
			400 kHz mode	1.3	—	ms	
			1 MHz mode(1)	TBD	—	ms	
D102	CB	Bus Capacitive Loading		—	400	pF	

Note 1: Maximum pin capacitance = 10 pF for all I²C pins.

2: A fast mode I²C bus device can be used in a standard mode I²C bus system, but parameter #107 ≥ 250 ns, must then be met. This will automatically be the case if the device does not stretch the LOW period of the SCL signal. If such a device does stretch the LOW period of the SCL signal, it must output the next data bit to the SDA line, parameter #102 + parameter #107 = 1000 + 250 = 1250 ns (for 100 kHz mode), before the SCL line is released.

FIGURE 26-21: USART SYNCHRONOUS TRANSMISSION (MASTER/SLAVE) TIMING

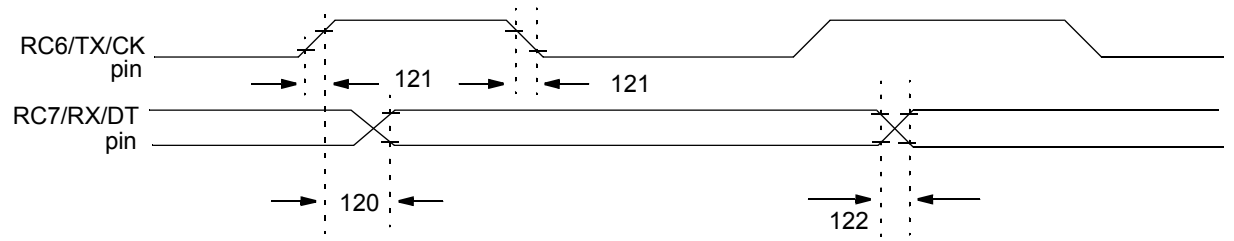

Note: Refer to Figure 26-5 for load conditions.

TABLE 26-22: USART SYNCHRONOUS TRANSMISSION REQUIREMENTS

Param No.	Symbol	Characteristic		Min	Max	Units	Conditions
120	TCKH2DTV	SYNC XMIT (MASTER & SLAVE) Clock High to Data Out Valid	PIC18**F**XX20	—	40	ns	
			PIC18**LF**XX20	—	100	ns	
121	TCKRF	Clock Out Rise Time and Fall Time (Master mode)	PIC18**F**XX20	—	20	ns	
			PIC18**LF**XX20	—	50	ns	
122	TDTRF	Data Out Rise Time and Fall Time	PIC18**F**XX20	—	20	ns	
			PIC18**LF**XX20	—	50	ns	

FIGURE 26-22: USART SYNCHRONOUS RECEIVE (MASTER/SLAVE) TIMING

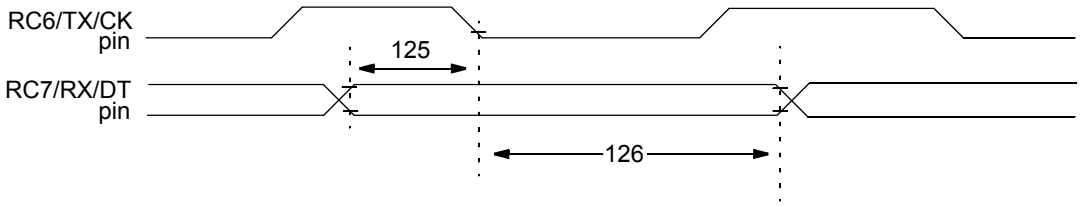

Note: Refer to Figure 26-5 for load conditions.

TABLE 26-23: USART SYNCHRONOUS RECEIVE REQUIREMENTS

Param. No.	Symbol	Characteristic	Min	Max	Units	Conditions
125	TDTV2CKL	SYNC RCV (MASTER & SLAVE) Data Hold before CK ↓ (DT hold time)	10	—	ns	
126	TCKL2DTL	Data Hold after CK ↓ (DT hold time)	15	—	ns	

© 2007 Microchip Technology Inc.

**TABLE 26-24: A/D CONVERTER CHARACTERISTICS: PIC18F2220/2320/4220/4320 (INDUSTRIAL)
PIC18F2220/2320/4220/4320 (EXTENDED)
PIC18LF2220/2320/4220/4320 (INDUSTRIAL)**

Param No.	Symbol	Characteristic		Min	Typ	Max	Units	Conditions
A01	NR	Resolution		—	—	10	bit	ΔVREF ≥ 3.0V
A03	EIL	Integral Linearity Error		—	—	<±1	LSb	ΔVREF ≥ 3.0V
A04	EDL	Differential Linearity Error		—	—	<±1	LSb	ΔVREF ≥ 3.0V
A06	EOFF	Offset Error		—	—	<±1	LSb	ΔVREF ≥ 3.0V
A07	EGN	Gain Error		—	—	<±1	LSb	ΔVREF ≥ 3.0V
A10	—	Monotonicity		guaranteed(2)			—	
A20	ΔVREF	Reference Voltage Range (VREFH – VREFL)		3	—	AVDD – AVSS	V	For 10-bit resolution
A21	VREFH	Reference Voltage High		AVSS + 3.0V	—	AVDD + 0.3V	V	For 10-bit resolution
A22	VREFL	Reference Voltage Low		AVSS – 0.3V	—	AVDD – 3.0V	V	For 10-bit resolution
A25	VAIN	Analog Input Voltage		VREFL	—	VREFH	V	
A28	AVDD	Analog Supply Voltage		VDD – 0.3	—	VDD + 0.3	V	Tie to VDD
A29	AVSS	Analog Supply Voltage		VSS – 0.3	—	VSS + 0.3	V	Tie to VSS
A30	ZAIN	Recommended Impedance of Analog Voltage Source		—	—	2.5(4)	kΩ	
A40	IAD	A/D Current from VDD	PIC18**F**XX20	—	—	180(5)	μA	Average current during conversion(1)
			PIC18**LF**XX20	—	—	90(5)	μA	
A50	IREF	VREF Input Current (3)		— —	— —	±5(5) ±150(5)	μA μA	During VAIN acquisition. During A/D conversion cycle.

Note 1: When A/D is off, it will not consume any current other than minor leakage current. The power-down current spec includes any such leakage from the A/D module.

2: The A/D conversion result never decreases with an increase in the input voltage and has no missing codes.

3: VREFH current is from RA3/AN3/VREF+ pin or AVDD, whichever is selected as the VREFH source. VREFL current is from RA2/AN2/VREF- pin or AVSS, whichever is selected as the VREFL source.

4: Assume quiet environment. If adjacent pins have high-frequency signals (analog or digital), ZAIN may need to be reduced to as low as 1 kΩ to fight crosstalk effects.

5: For guidance only.

FIGURE 26-23: A/D CONVERSION TIMING

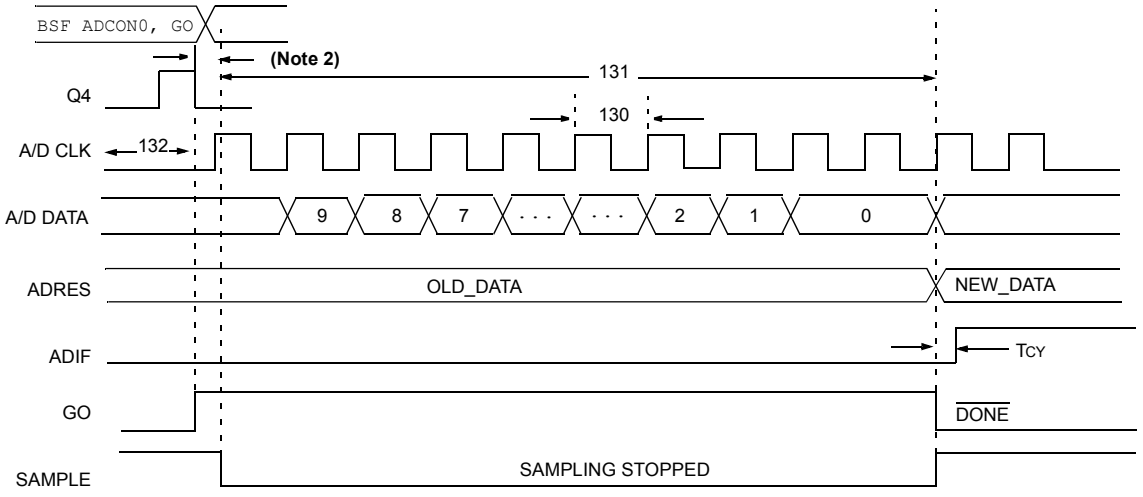

Note 1: If the A/D clock source is selected as RC, a time of TCY is added before the A/D clock starts. This allows the SLEEP instruction to be executed.

2: This is a minimal RC delay (typically 100 ns), which also disconnects the holding capacitor from the analog input.

TABLE 26-25: A/D CONVERSION REQUIREMENTS

Param No.	Symbol	Characteristic		Min	Max	Units	Conditions
130	TAD	A/D Clock Period	PIC18**F**XX20	1.6	20(2)	µs	TOSC based, VREF ≥ 3.0V
			PIC18**LF**XX20	3.0	20(2)	µs	TOSC based, VREF full range
			PIC18**F**XX20	2.0	6.0	µs	A/D RC mode
			PIC18**LF**XX20	3.0	9.0	µs	A/D RC mode
131	TCNV	Conversion Time (not including acquisition time)(1)		11	12	TAD	

Note 1: ADRES register may be read on the following TCY cycle.

2: The time of the A/D clock period is dependent on the device frequency and the TAD clock divider.

© 2007 Microchip Technology Inc.

27.0 DC AND AC CHARACTERISTICS GRAPHS AND TABLES

Note: The graphs and tables provided following this note are a statistical summary based on a limited number of samples and are provided for informational purposes only. The performance characteristics listed herein are not tested or guaranteed. In some graphs or tables, the data presented may be outside the specified operating range (e.g., outside specified power supply range) and therefore, outside the warranted range.

"Typical" represents the mean of the distribution at 25°C. "Maximum" or "minimum" represents (mean + 3σ) or (mean – 3σ) respectively, where σ is a standard deviation, over the whole temperature range.

FIGURE 27-1: TYPICAL IDD vs. FOSC OVER VDD PRI_RUN, EC MODE, +25°C

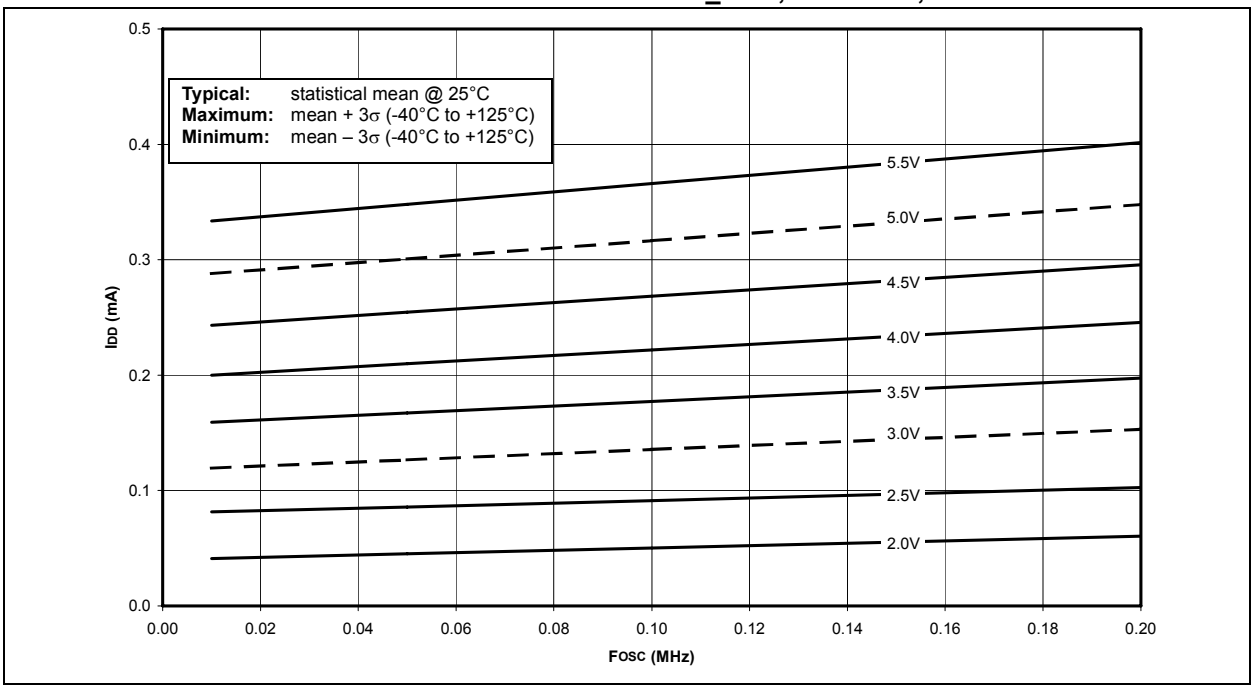

FIGURE 27-2: MAXIMUM IDD vs. FOSC OVER VDD PRI_RUN, EC MODE, -40°C TO +85°C

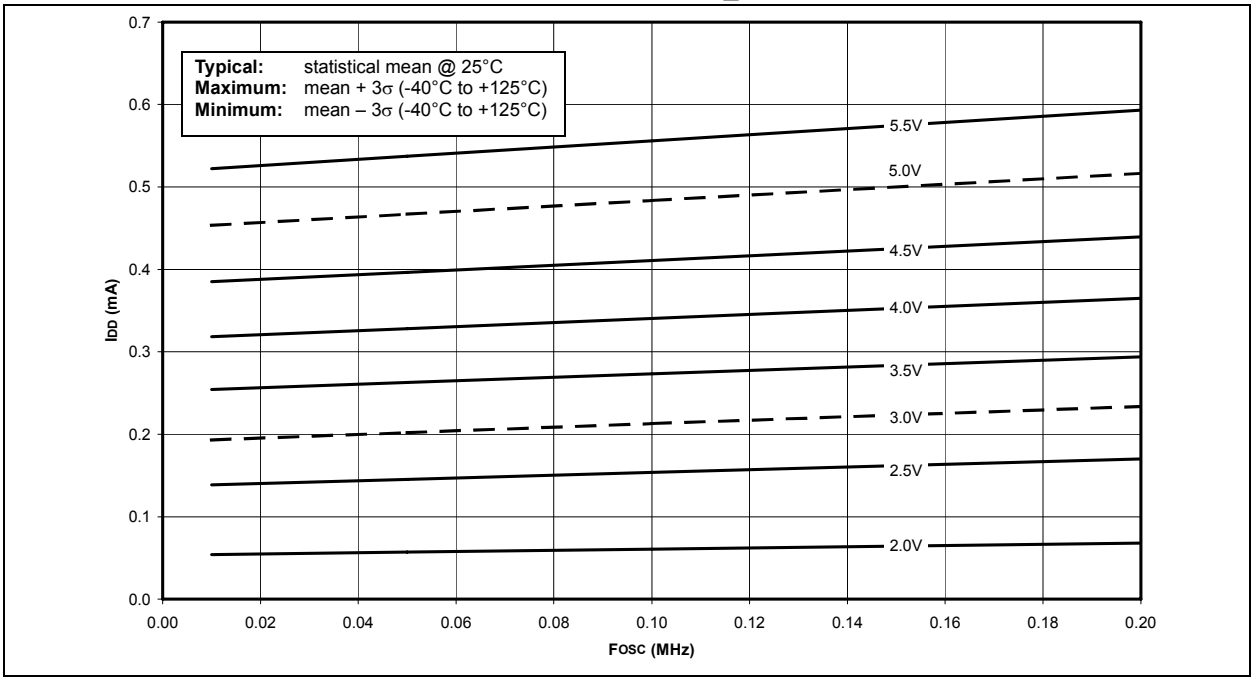

FIGURE 27-3: MAXIMUM IDD vs. FOSC OVER VDD PRI_RUN, EC MODE, -40°C TO +125°C

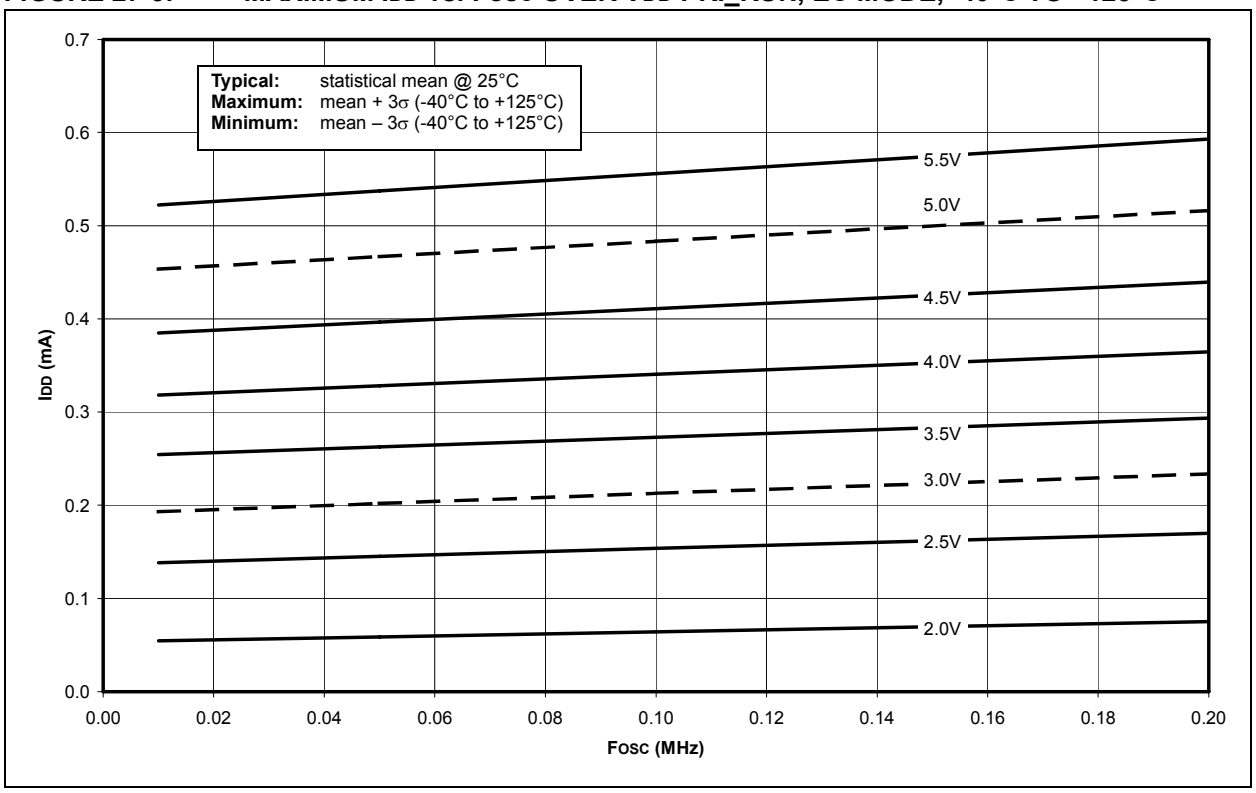

FIGURE 27-4: TYPICAL IDD vs. FOSC OVER VDD PRI_RUN, EC MODE, +25°C

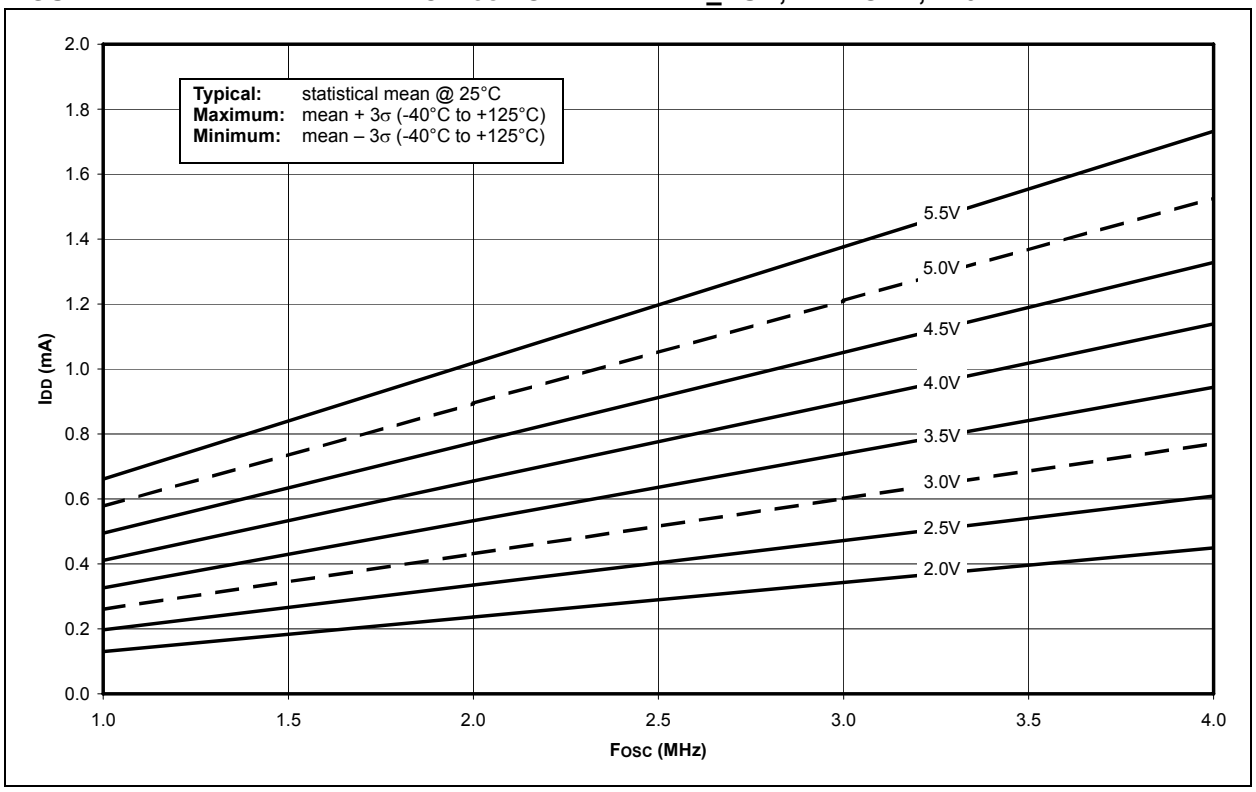

© 2007 Microchip Technology Inc.

FIGURE 27-5: MAXIMUM IDD vs. FOSC OVER VDD PRI_RUN, EC MODE, -40°C TO +125°C

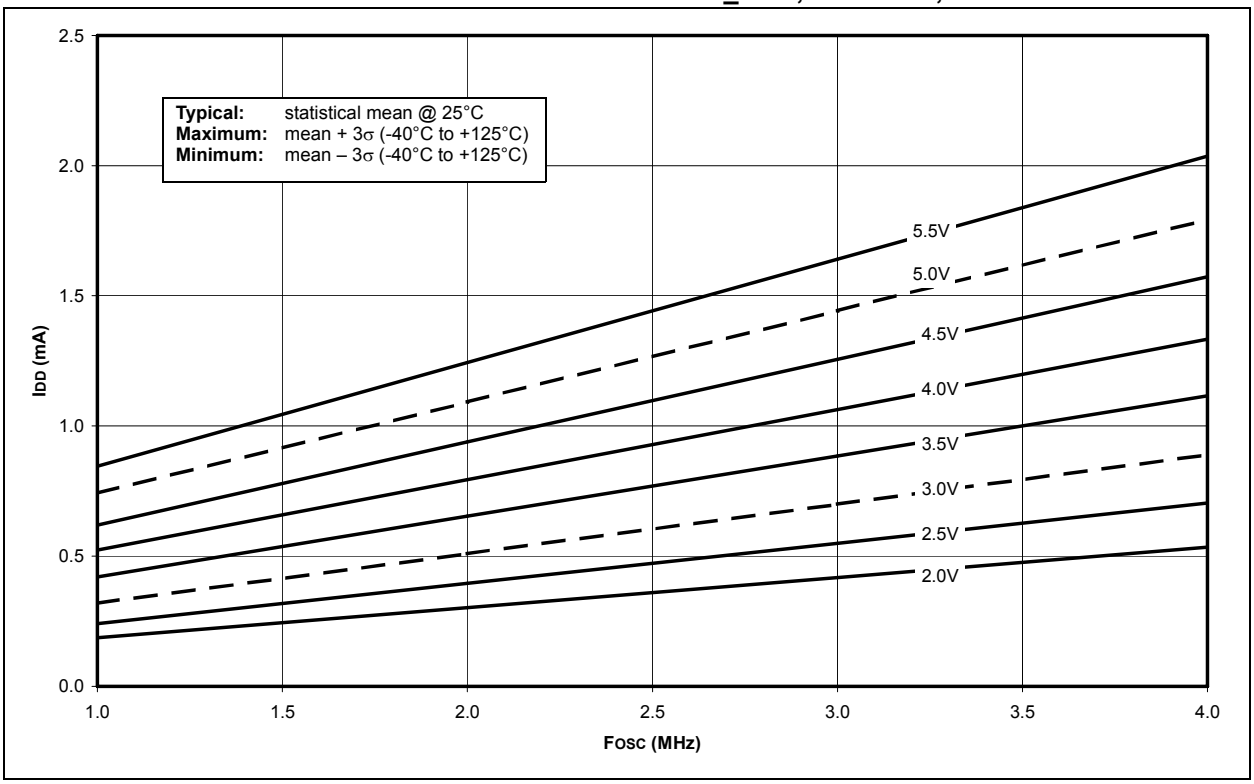

FIGURE 27-6: TYPICAL IDD vs. FOSC OVER VDD PRI_RUN, EC MODE, +25°C

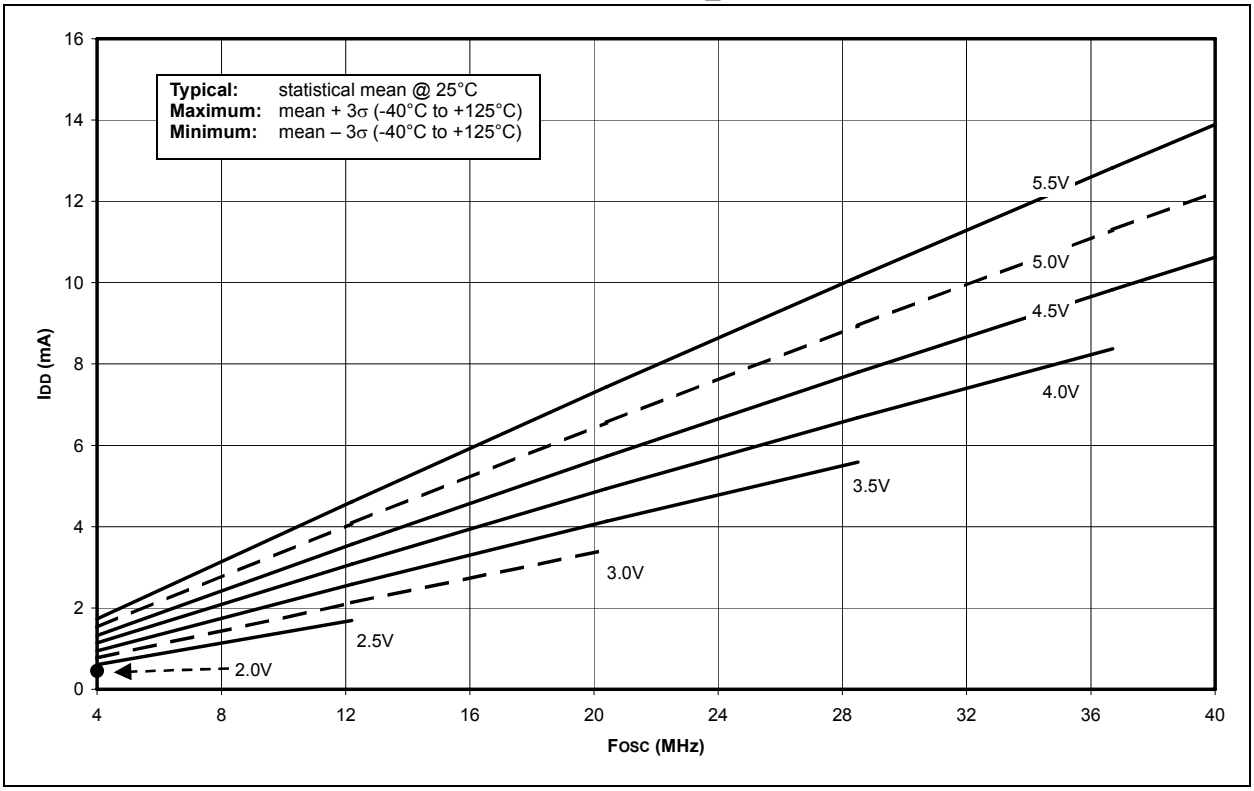

FIGURE 27-7: MAXIMUM IDD vs. FOSC OVER VDD PRI_RUN, EC MODE, -40°C TO +125°C

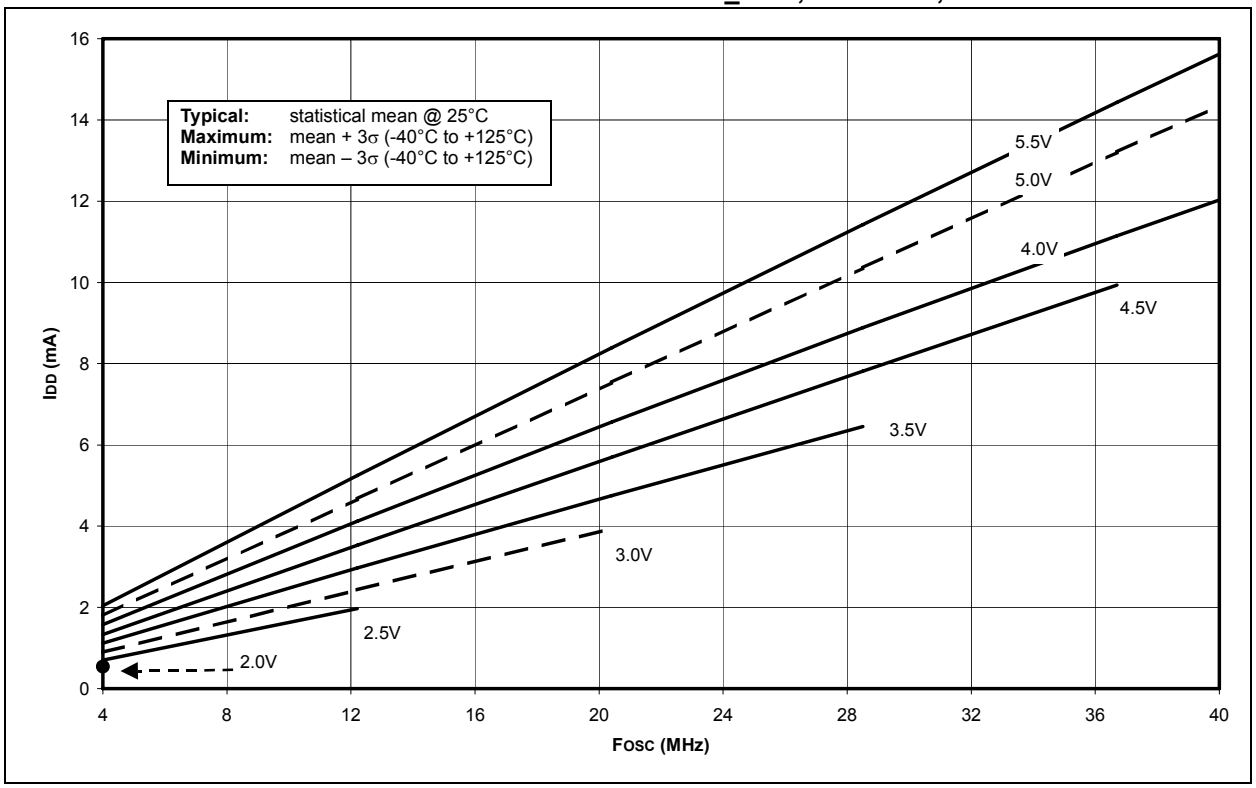

FIGURE 27-8: TYPICAL IDD vs. FOSC OVER VDD PRI_IDLE, EC MODE, +25°C

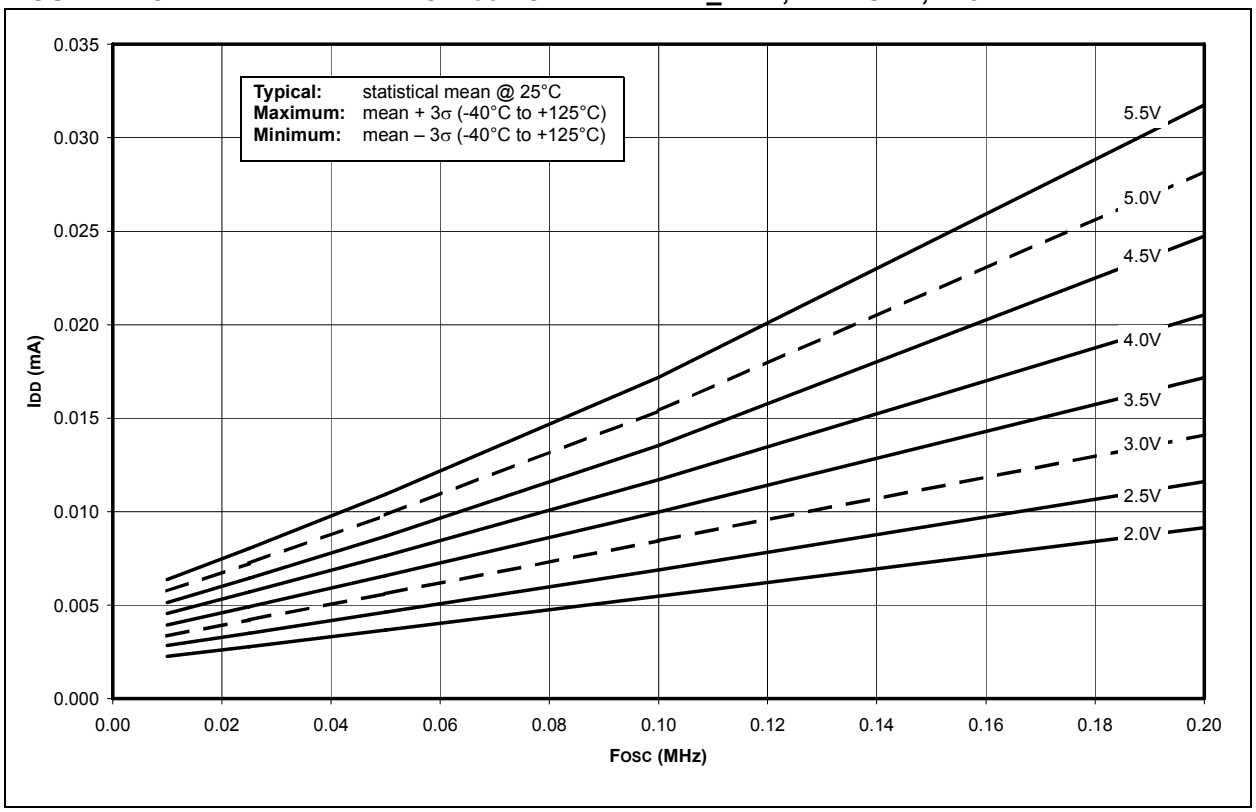

© 2007 Microchip Technology Inc.

FIGURE 27-9: MAXIMUM IDD vs. FOSC OVER VDD PRI_IDLE, EC MODE, -40°C TO +85°C

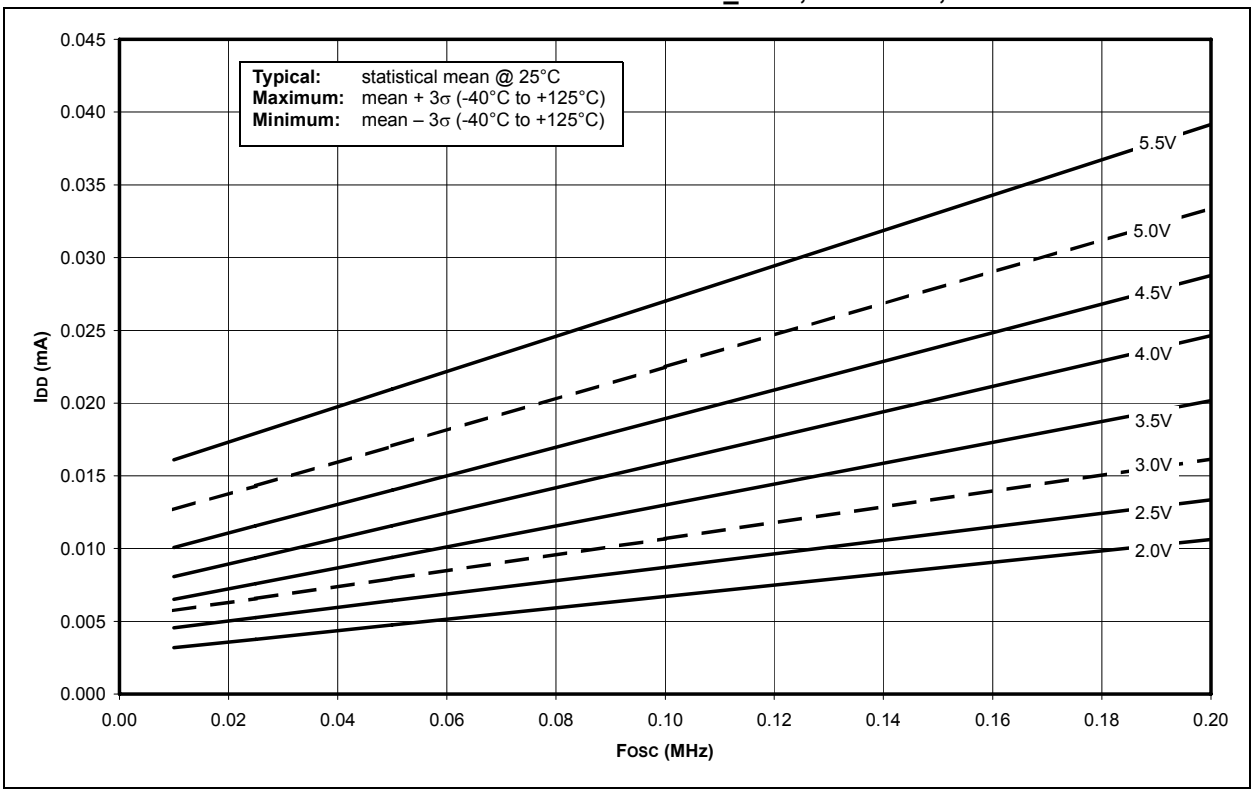

FIGURE 27-10: MAXIMUM IDD vs. FOSC OVER VDD PRI_IDLE, EC MODE, -40°C TO +125°C

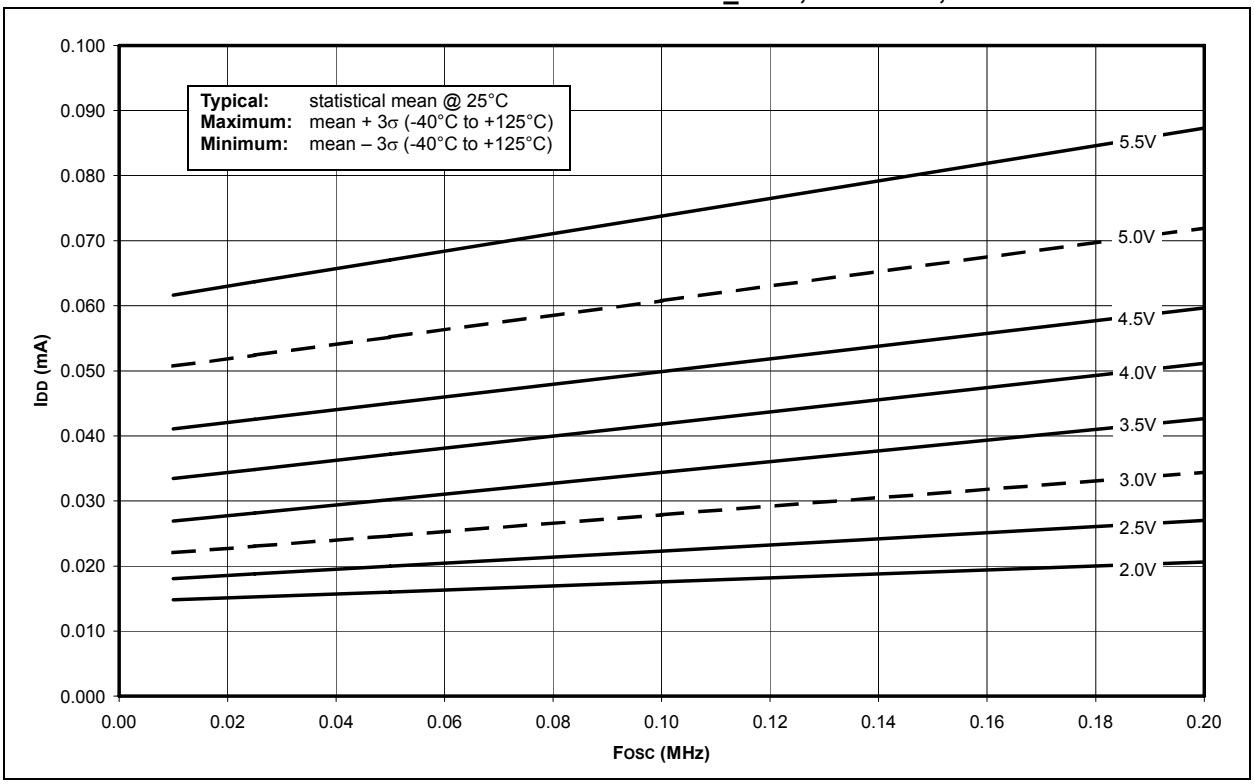

FIGURE 27-11: TYPICAL IDD vs. FOSC OVER VDD PRI_IDLE, EC MODE, +25°C

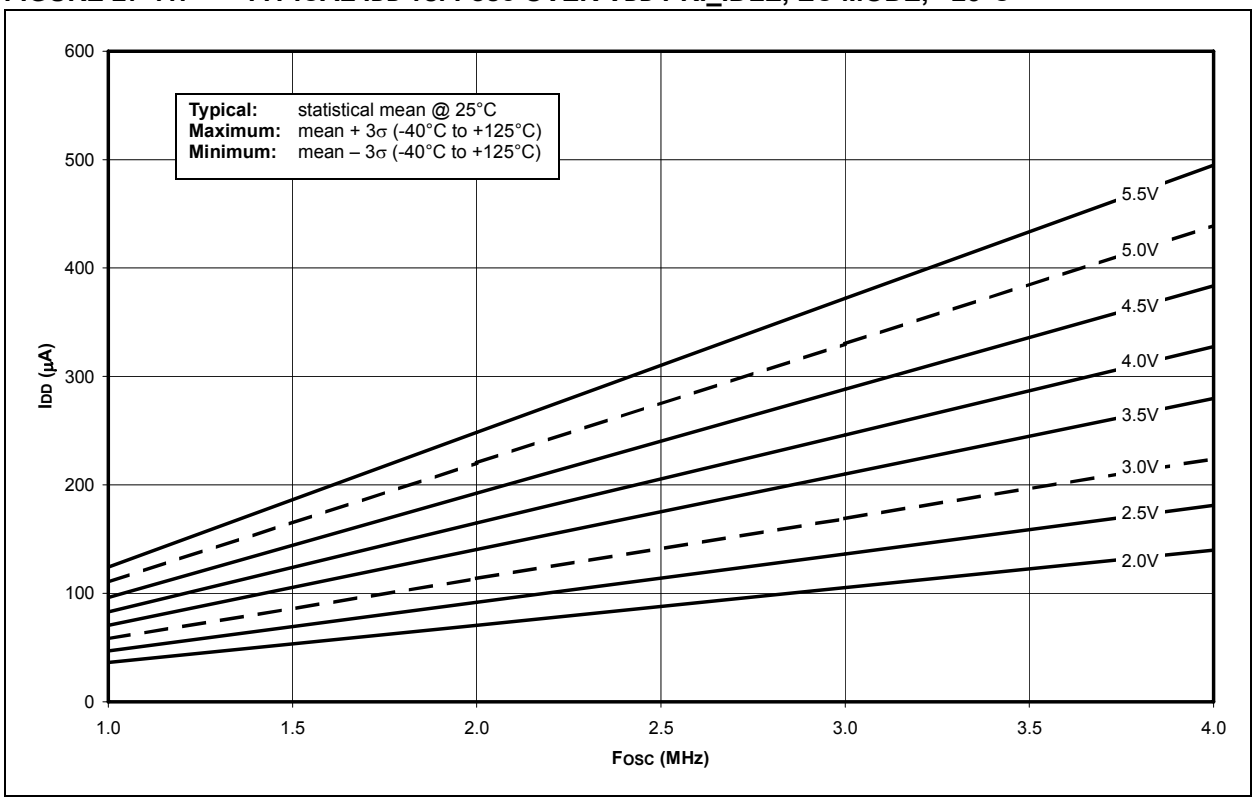

FIGURE 27-12: MAXIMUM IDD vs. FOSC OVER VDD PRI_IDLE, EC MODE, -40°C TO +125°C

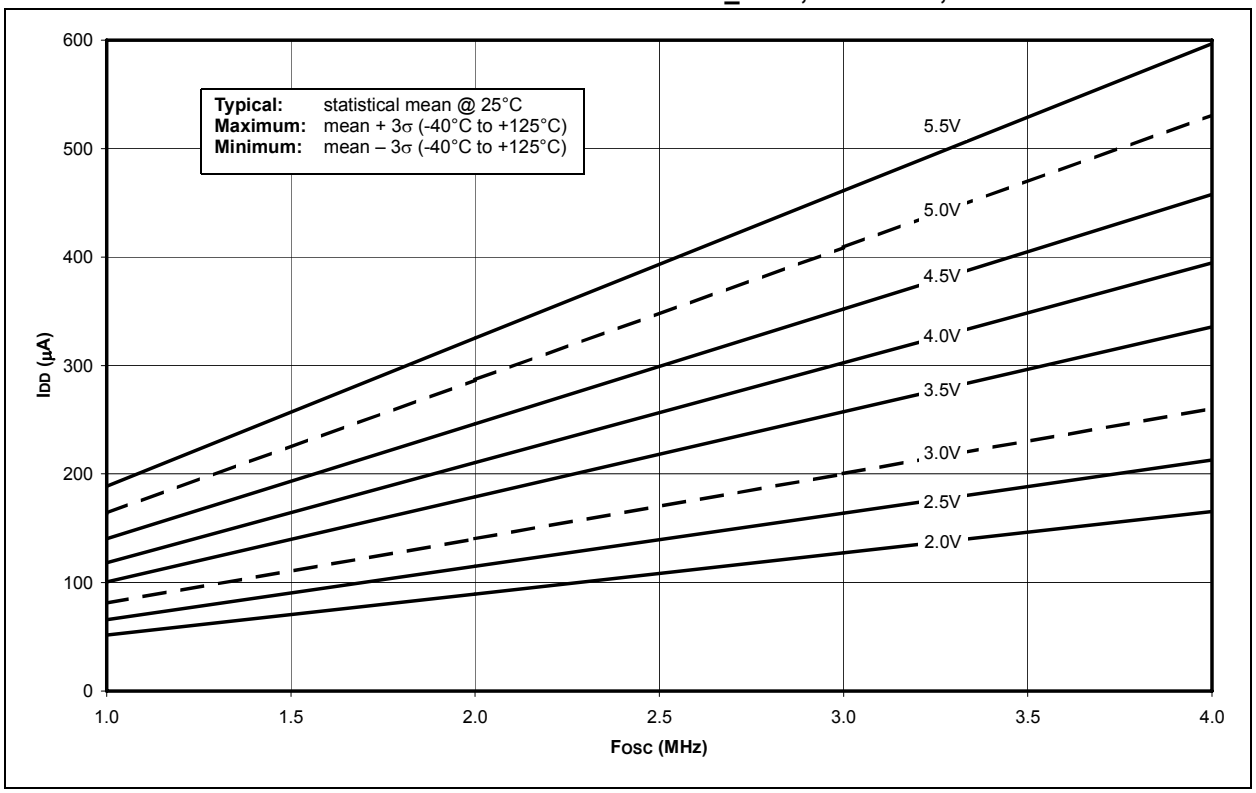

© 2007 Microchip Technology Inc.

FIGURE 27-13: TYPICAL IDD vs. FOSC OVER VDD PRI_IDLE, EC MODE, +25°C

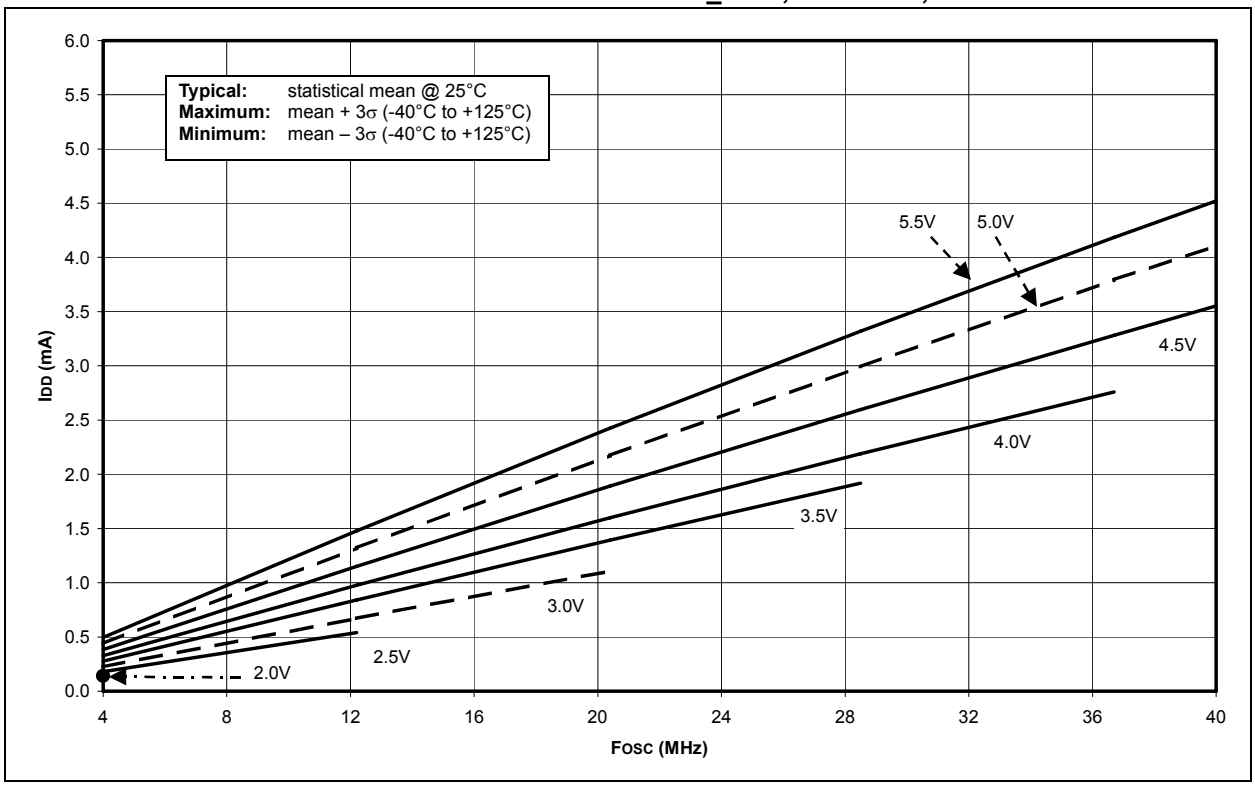

FIGURE 27-14: MAXIMUM IDD vs. FOSC OVER VDD PRI_IDLE, EC MODE, -40°C TO +125°C

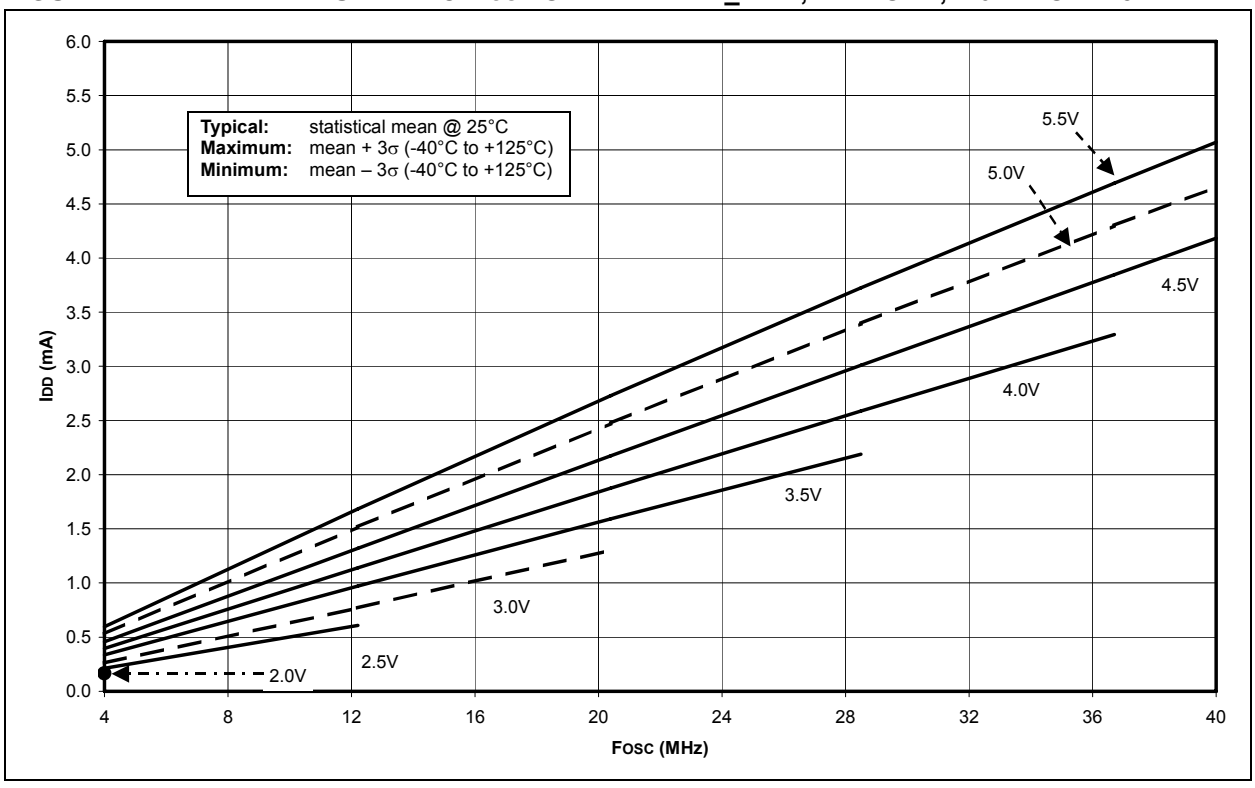

FIGURE 27-15: TYPICAL I_{PD} vs. V_{DD} (+25°C), 125 kHz TO 8 MHz RC_RUN MODE, ALL PERIPHERALS DISABLED

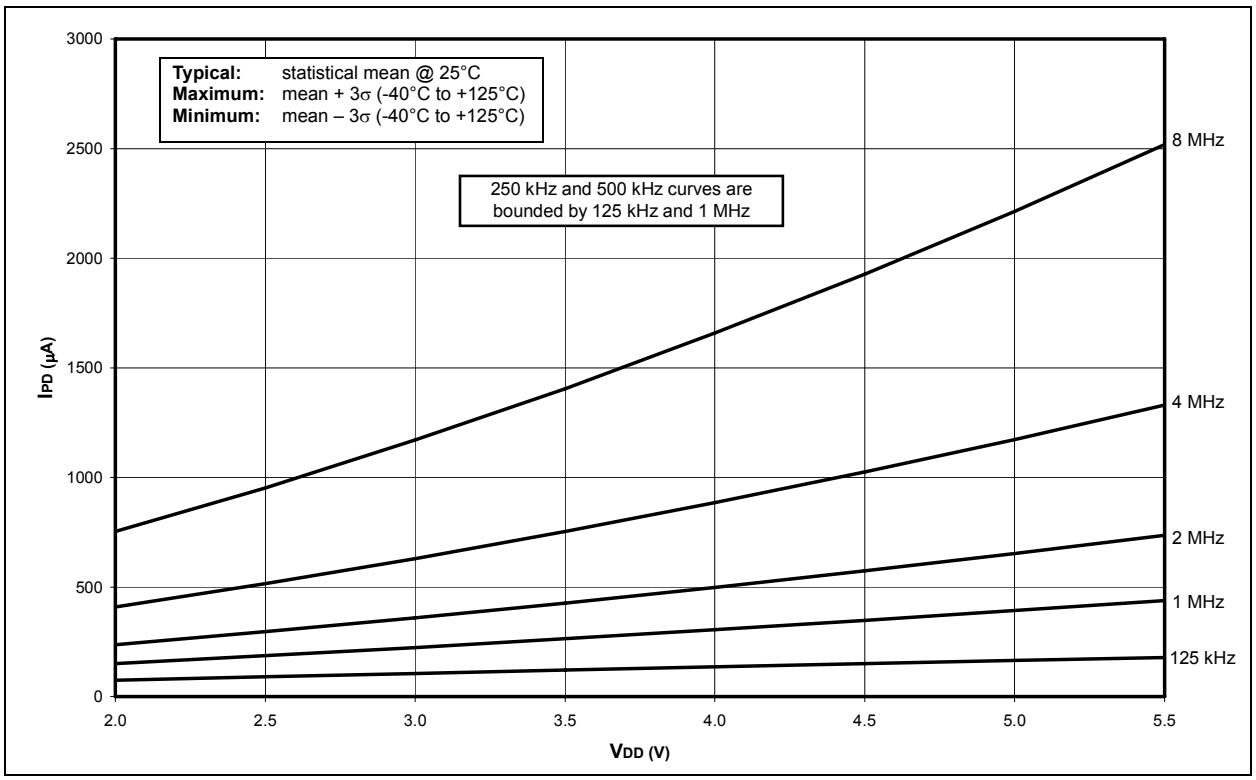

FIGURE 27-16: MAXIMUM I_{PD} vs. V_{DD} (-40°C TO +125°C), 125 kHz TO 8 MHz RC_RUN, ALL PERIPHERALS DISABLED

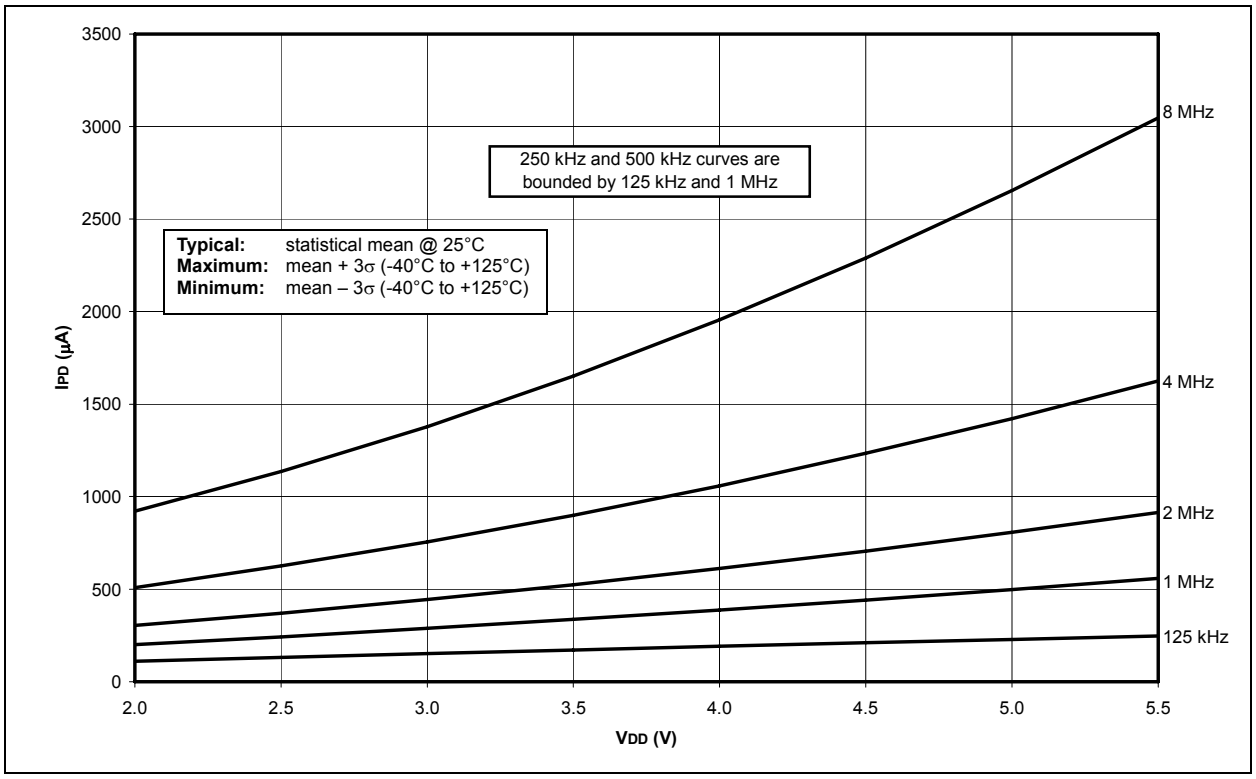

© 2007 Microchip Technology Inc.

FIGURE 27-17: TYPICAL AND MAXIMUM I_{PD} vs. V_{DD} (-40°C TO +125°C), 31.25 kHz RC_RUN, ALL PERIPHERALS DISABLED

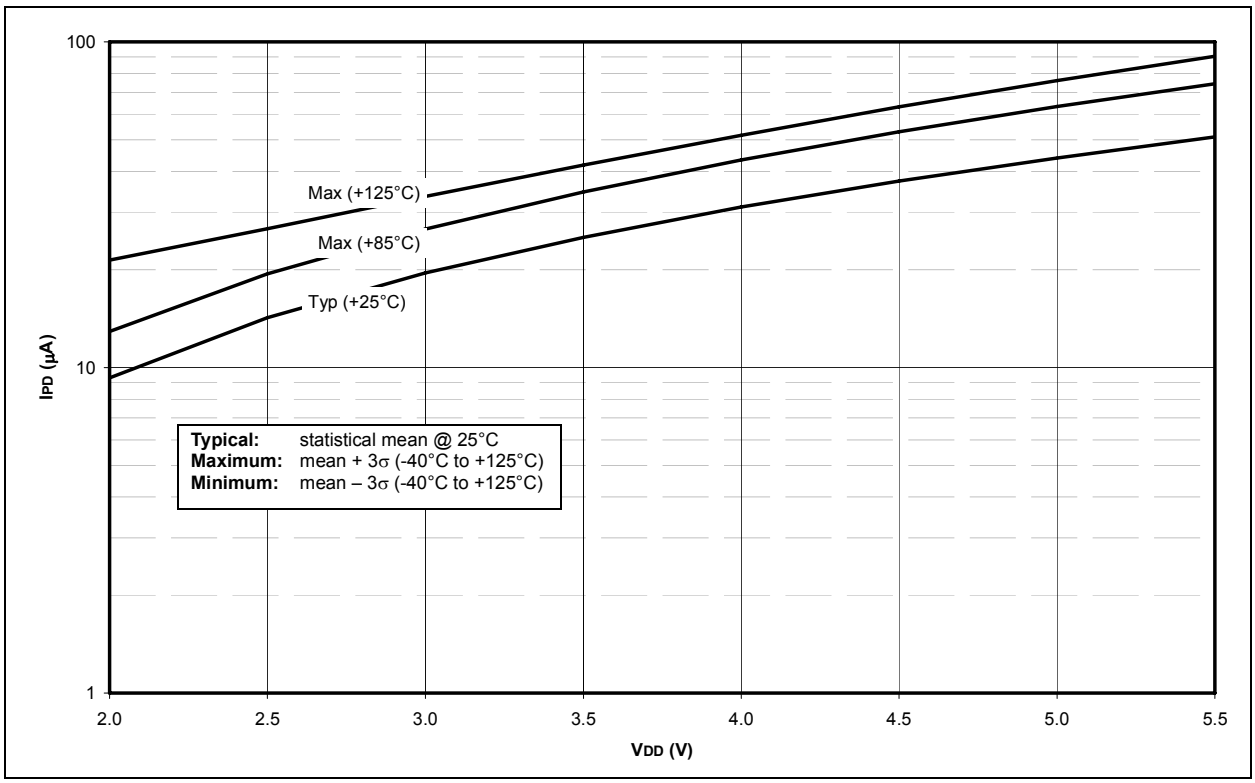

FIGURE 27-18: TYPICAL I_{PD} vs. V_{DD} (+25°C), 125 kHz TO 8 MHz RC_IDLE MODE, ALL PERIPHERALS DISABLED

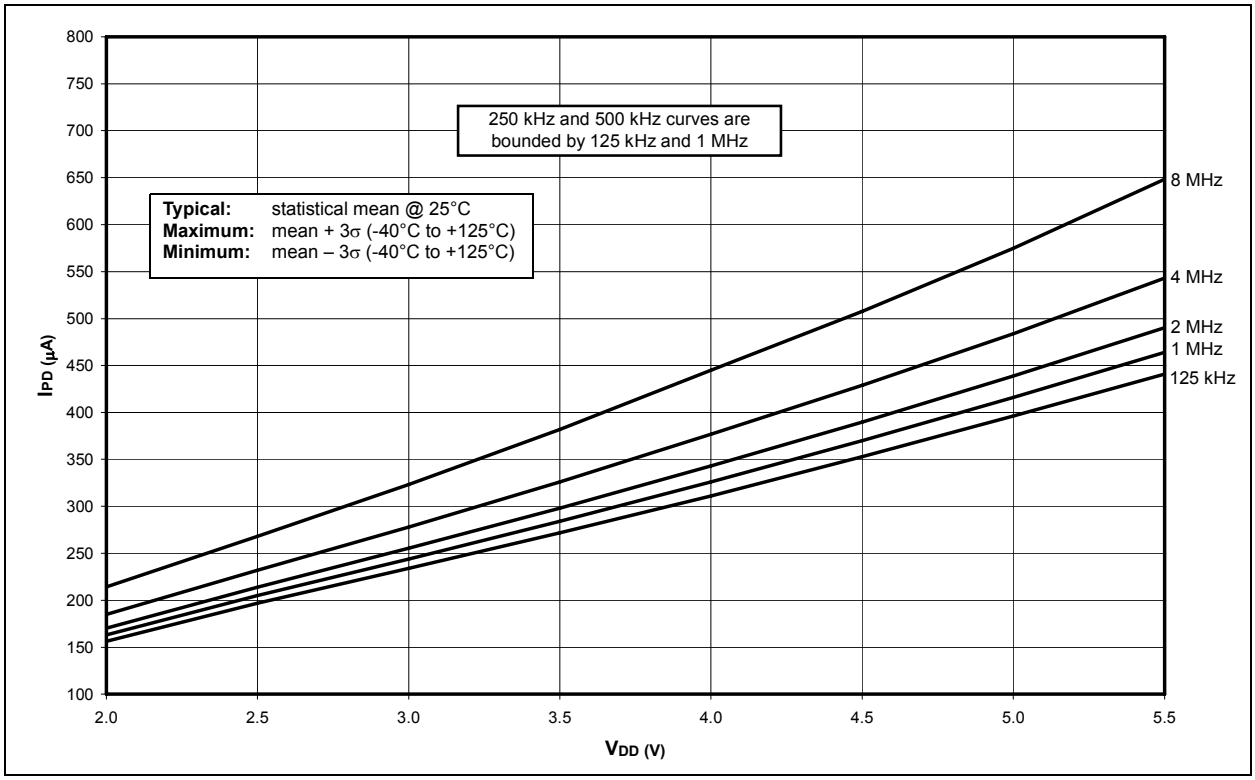

FIGURE 27-19: MAXIMUM I_{PD} vs. V_{DD} (-40°C TO +125°C), 125 kHz TO 8 MHz RC_IDLE, ALL PERIPHERALS DISABLED

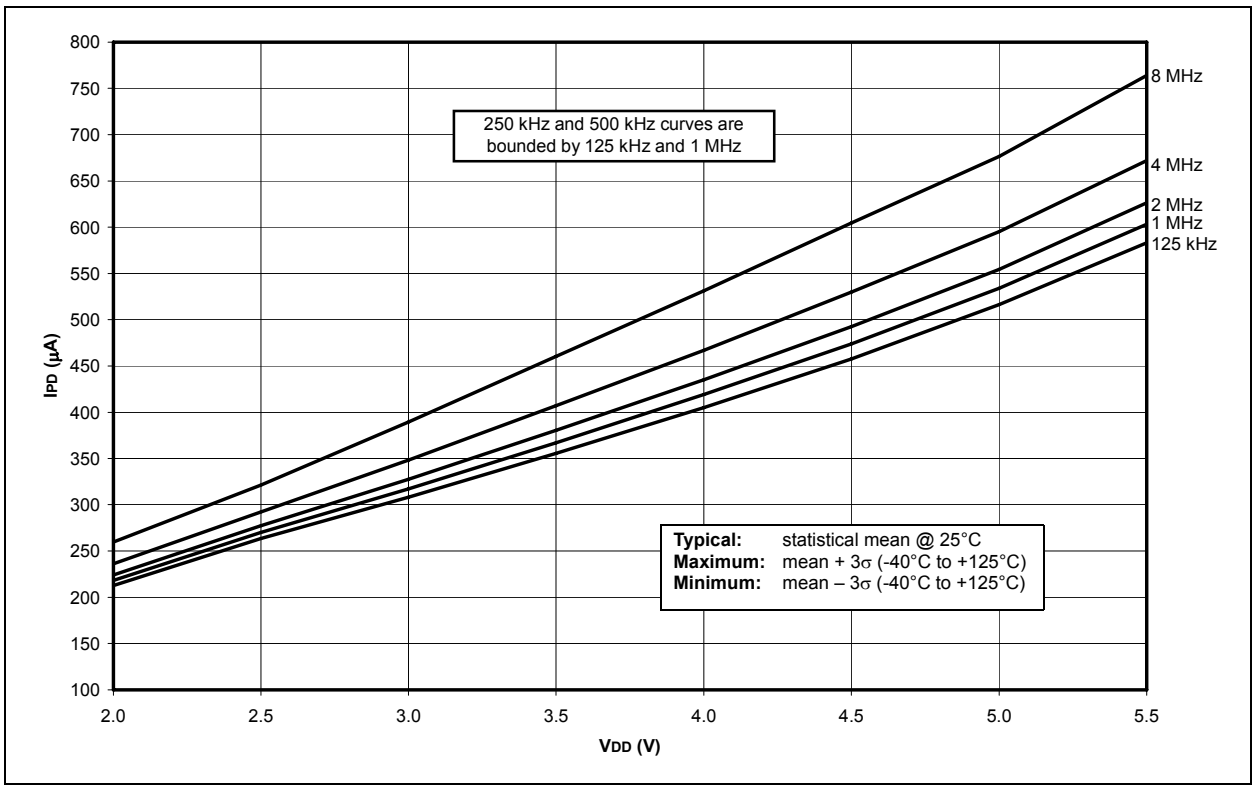

FIGURE 27-20: TYPICAL AND MAXIMUM I_{PD} vs. V_{DD} (-40°C TO +125°C), 31.25 kHz RC_IDLE, ALL PERIPHERALS DISABLED

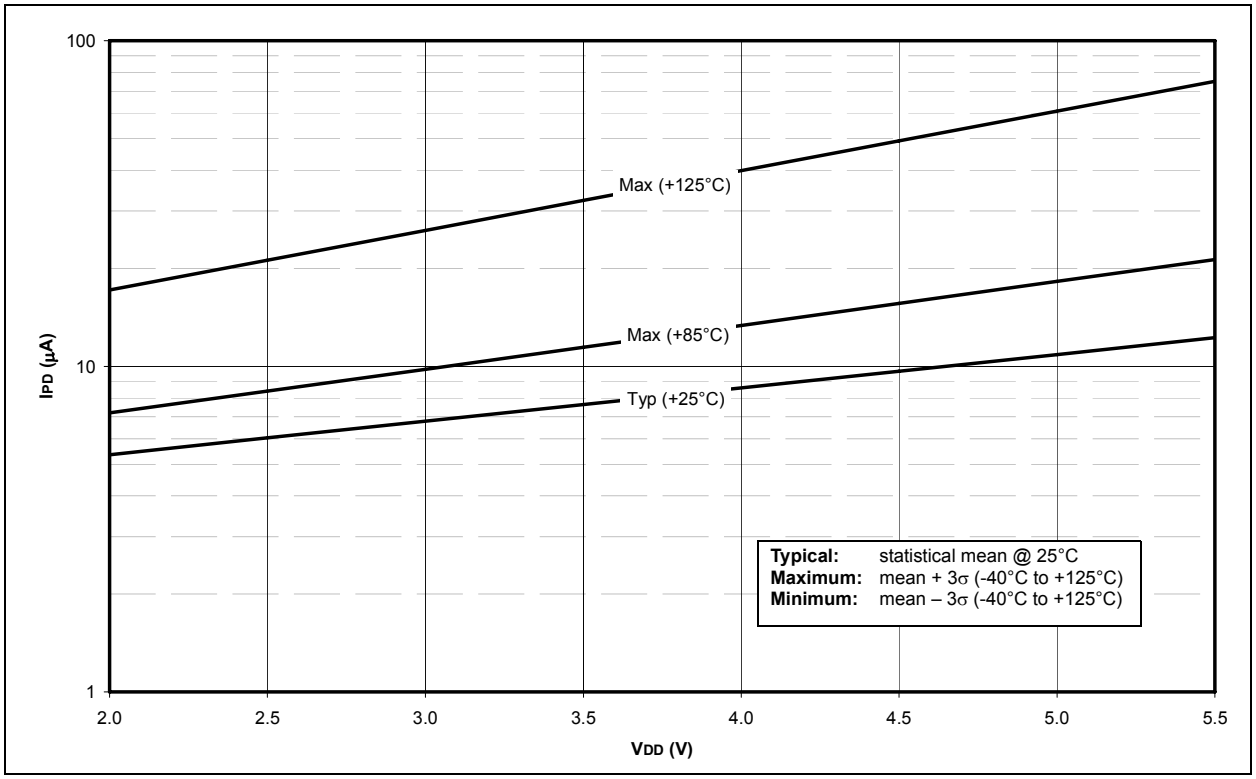

© 2007 Microchip Technology Inc.

FIGURE 27-21: IPD SEC_RUN MODE, -10°C TO +70°C 32.768 kHz XTAL 2 X 22 pF, ALL PERIPHERALS DISABLED

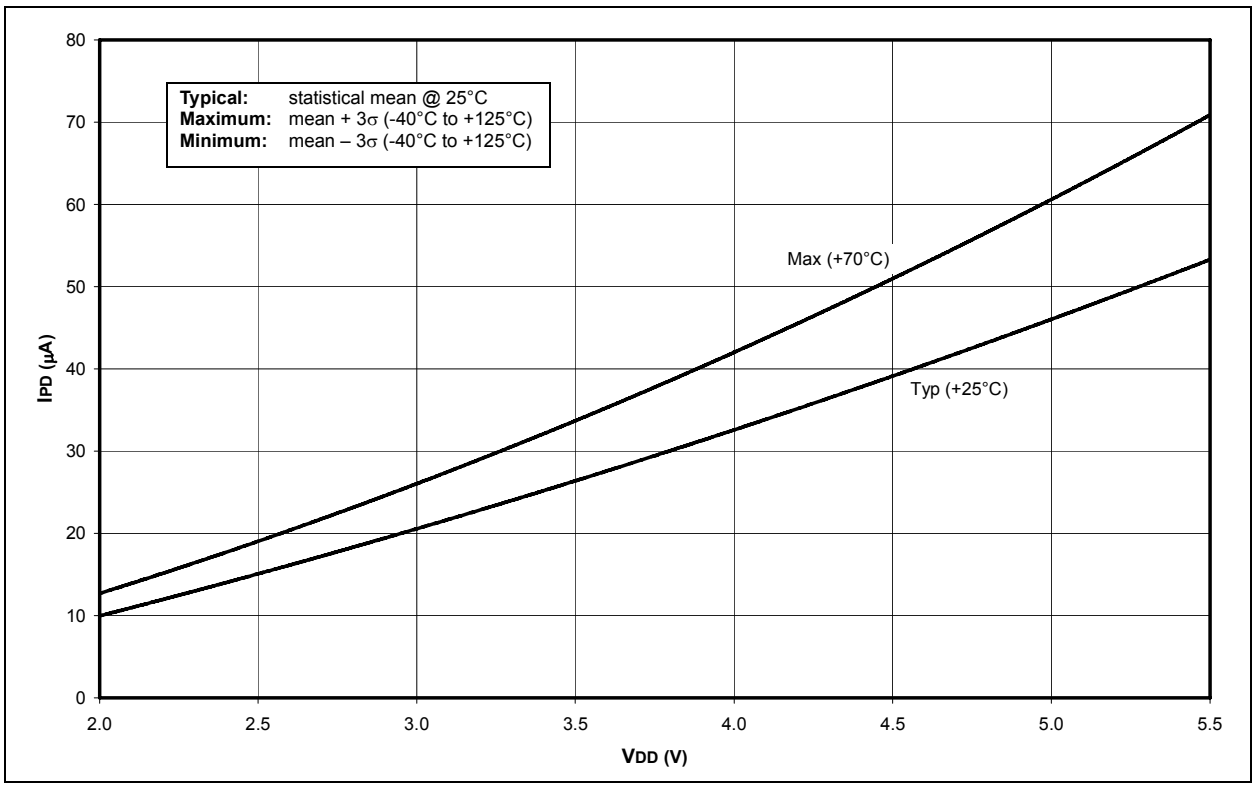

FIGURE 27-22: IPD SEC_IDLE, -10°C TO +70°C 32.768 kHz 2 X 22 pF, ALL PERIPHERALS DISABLED

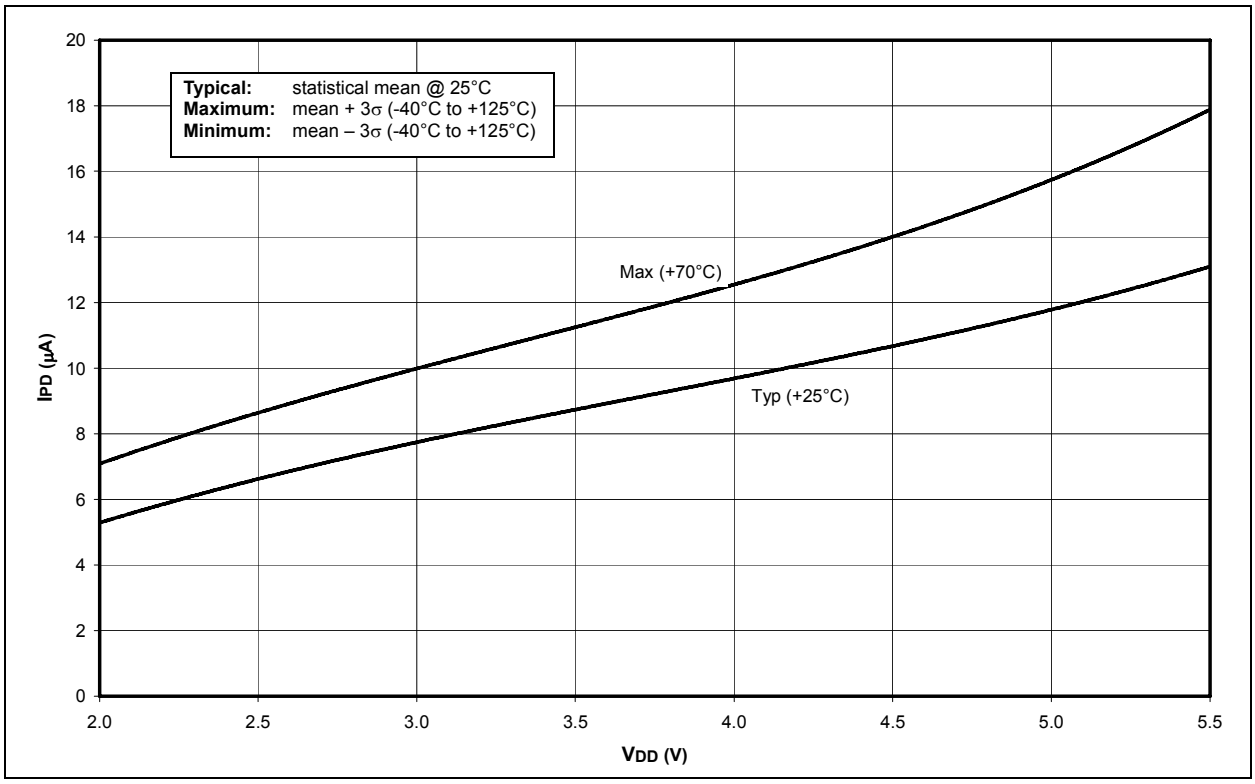

FIGURE 27-23: TOTAL I_{PD}, -40°C TO +125°C SLEEP MODE, ALL PERIPHERALS DISABLED

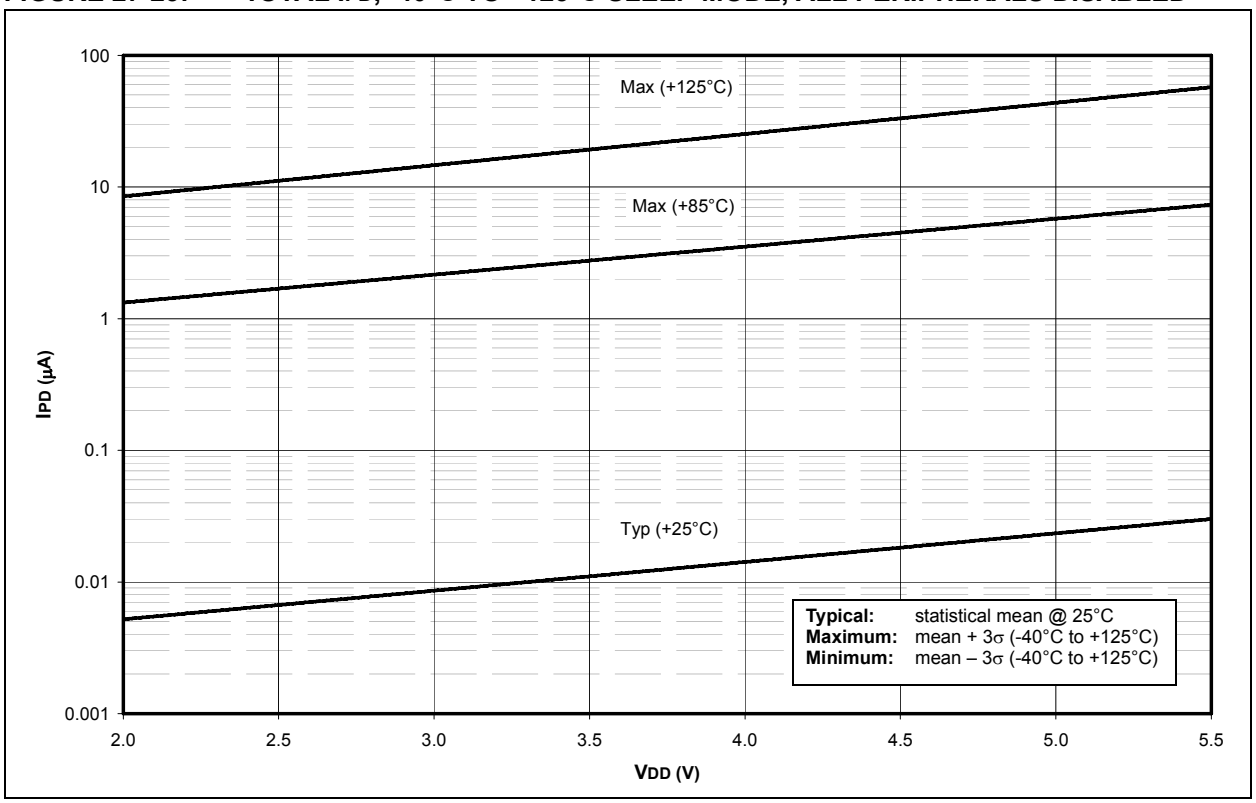

FIGURE 27-24: V_{OH} vs. I_{OH} OVER TEMPERATURE (-40°C TO +125°C), V_{DD} = 3.0V

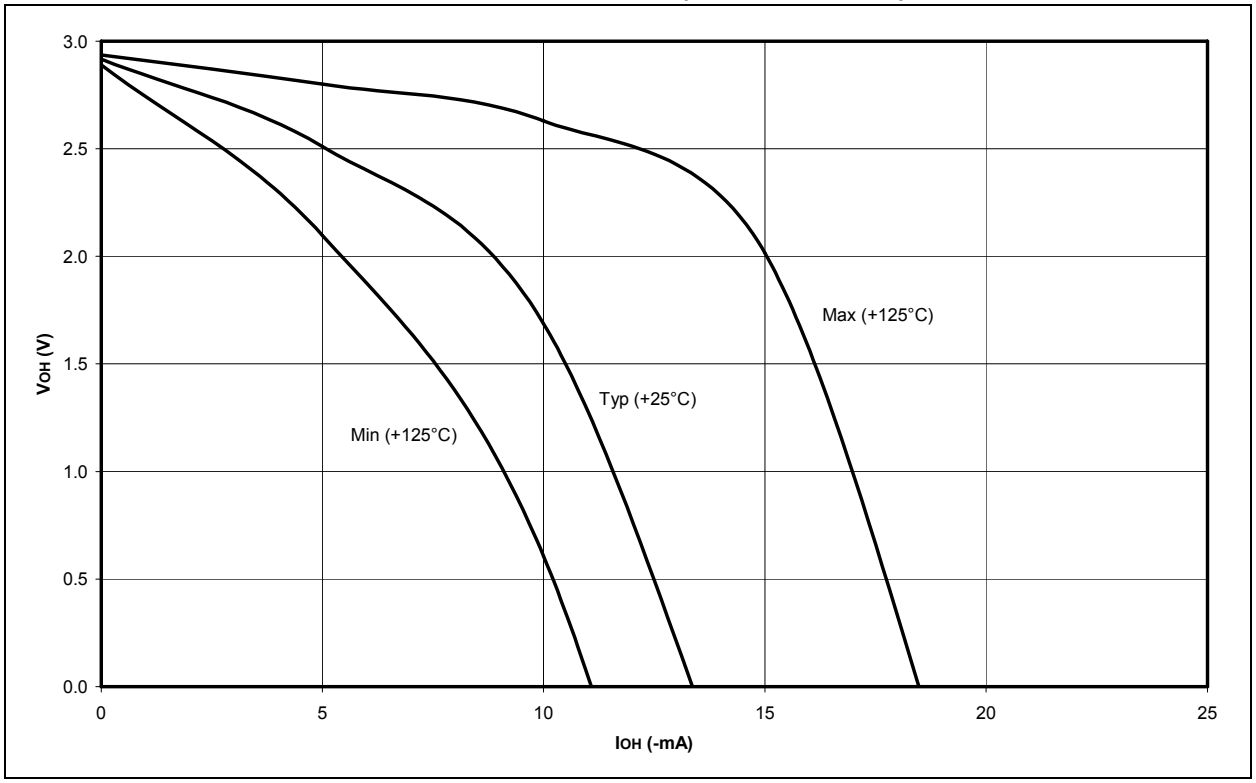

© 2007 Microchip Technology Inc.

FIGURE 27-25: V_{OH} vs. I_{OH} OVER TEMPERATURE (-40°C TO +125°C), V_{DD} = 5.0V

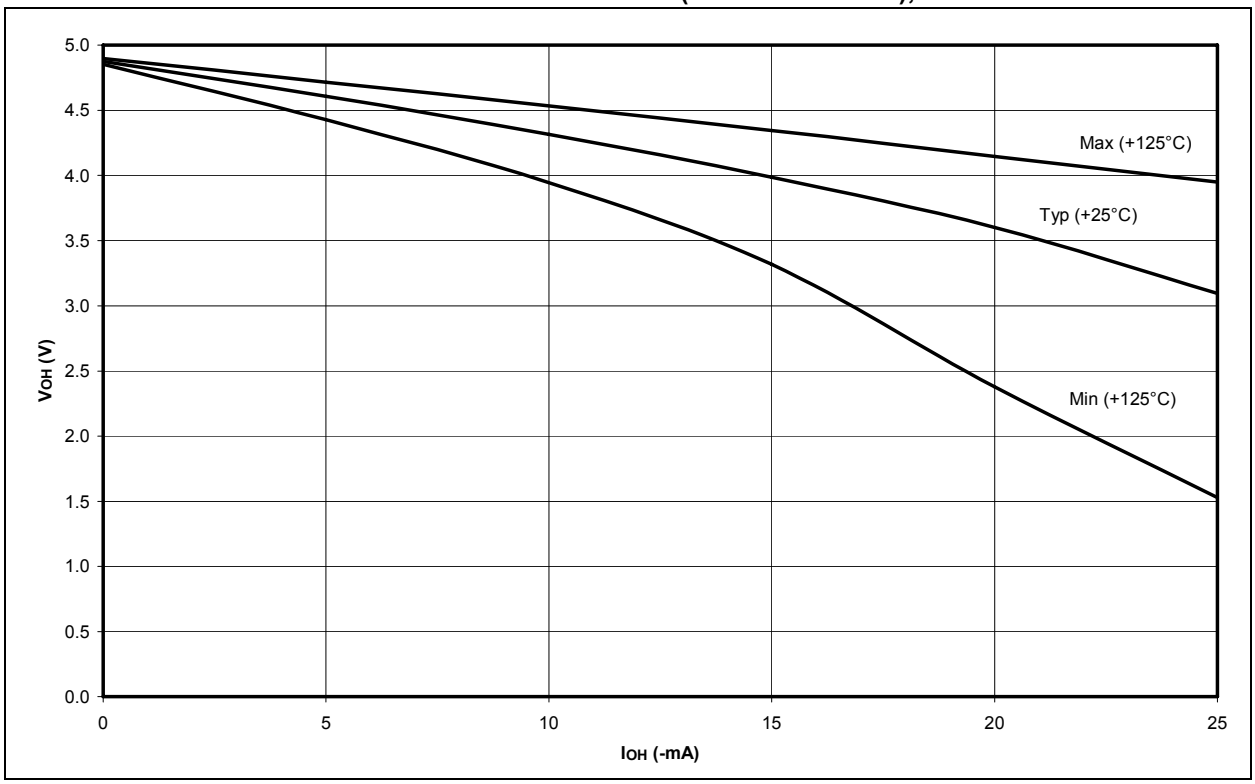

FIGURE 27-26: V_{OL} vs. I_{OL} OVER TEMPERATURE (-40°C TO +125°C), V_{DD} = 3.0V

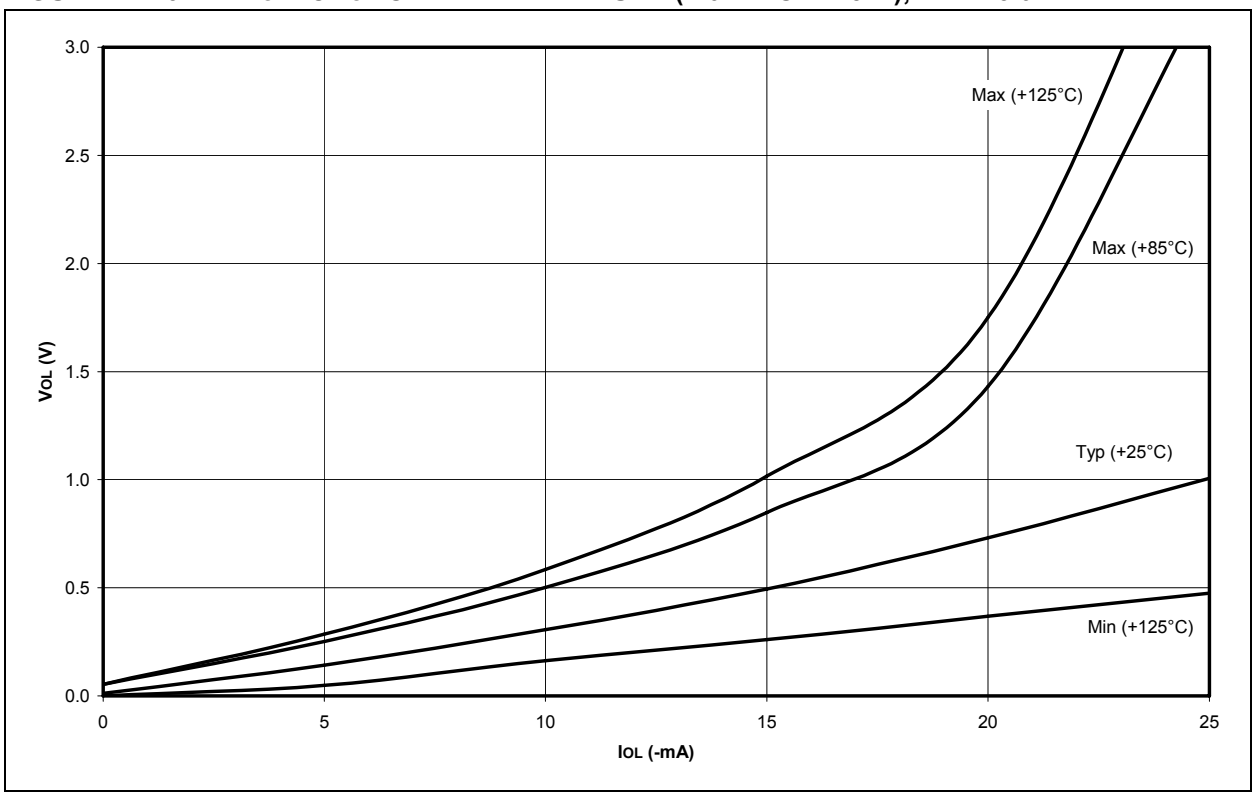

FIGURE 27-27: V_{OL} vs. I_{OL} OVER TEMPERATURE (-40°C TO +125°C), V_{DD} = 5.0V

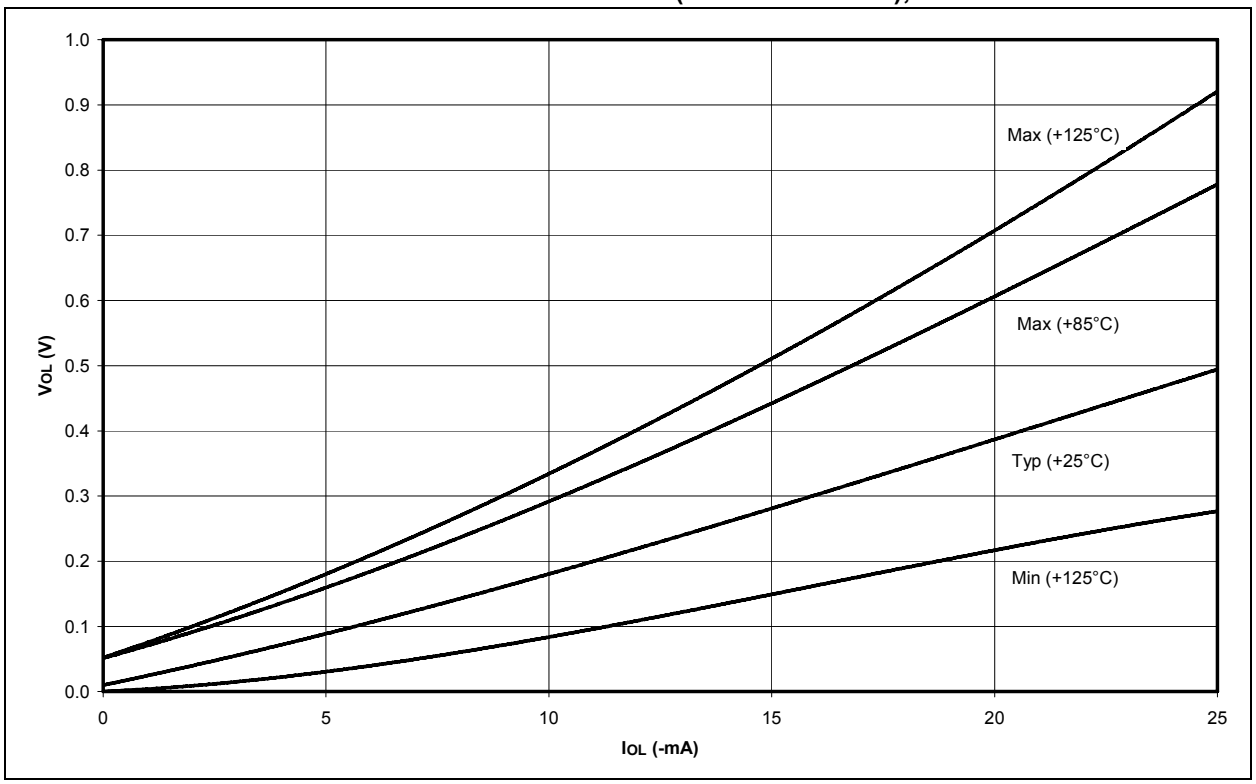

FIGURE 27-28: Δ I_{PD} TIMER1 OSCILLATOR, -10°C TO +70°C SLEEP MODE, TMR1 COUNTER DISABLED

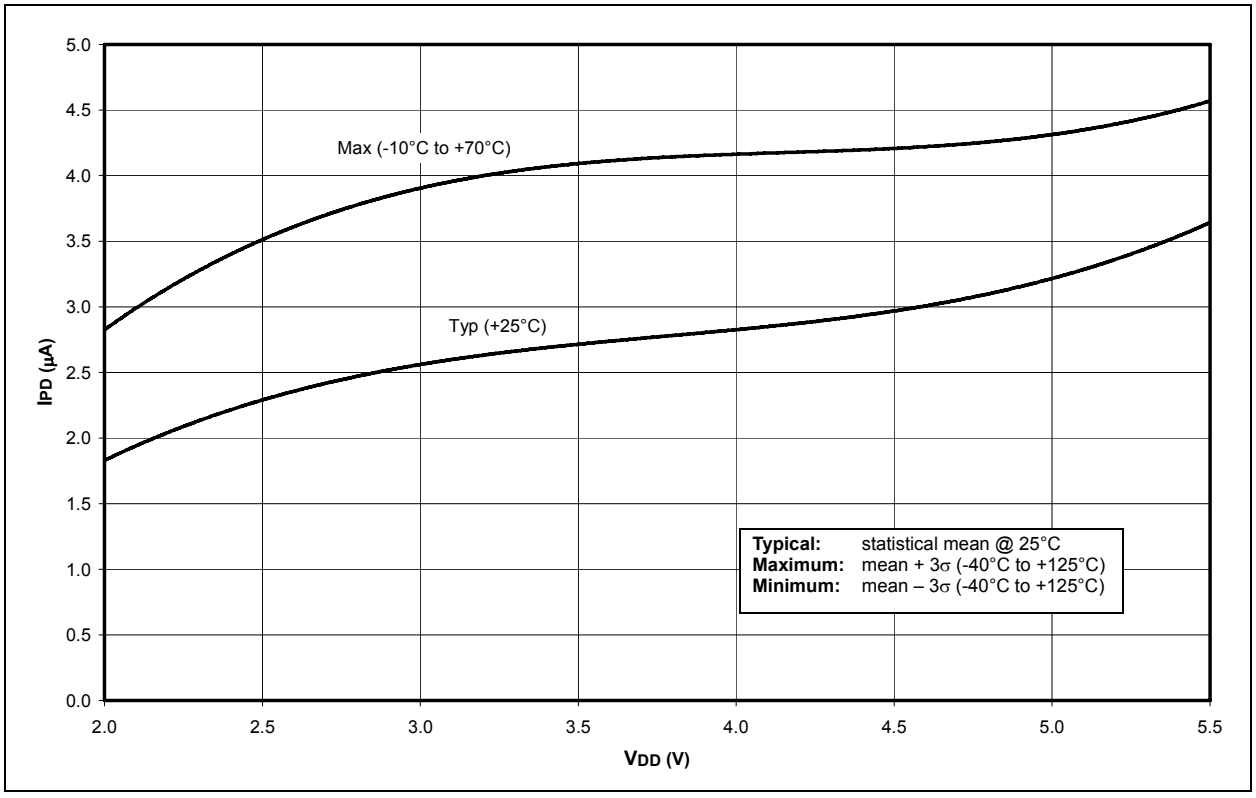

© 2007 Microchip Technology Inc.

FIGURE 27-29: ΔIPD FSCM vs. VDD OVER TEMPERATURE PRI_IDLE, EC OSCILLATOR AT 32 kHz, -40°C TO +125°C

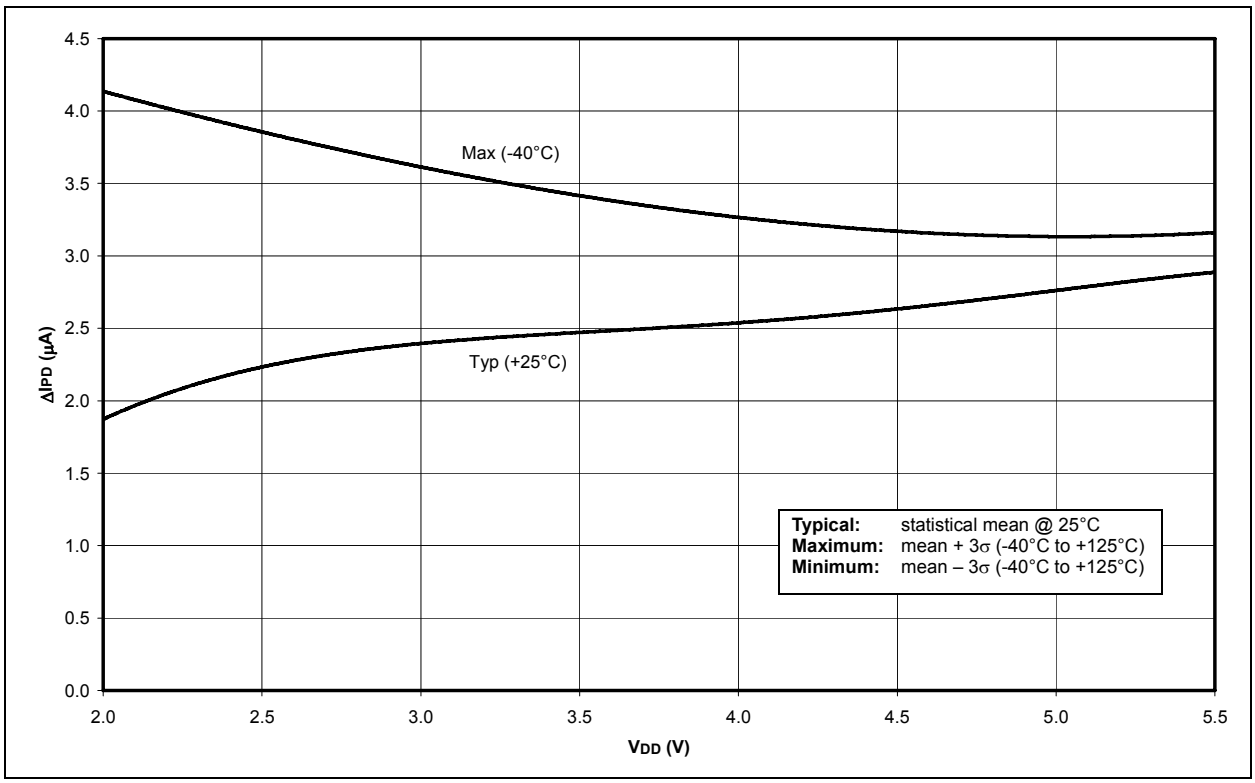

FIGURE 27-30: ΔIPD WDT, -40°C TO +125°C SLEEP MODE, ALL PERIPHERALS DISABLED

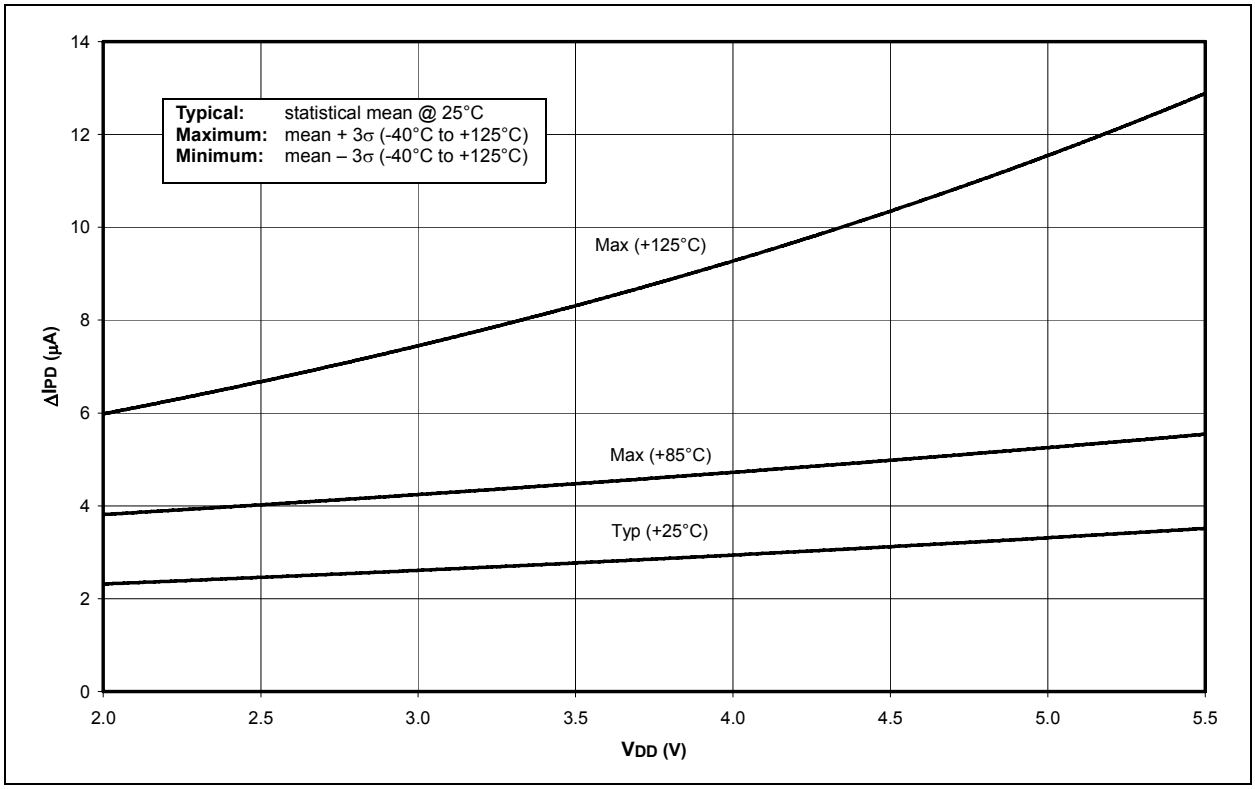

FIGURE 27-31: ΔIPD LVD vs. VDD SLEEP MODE, LVD = 2.00V-2.12V

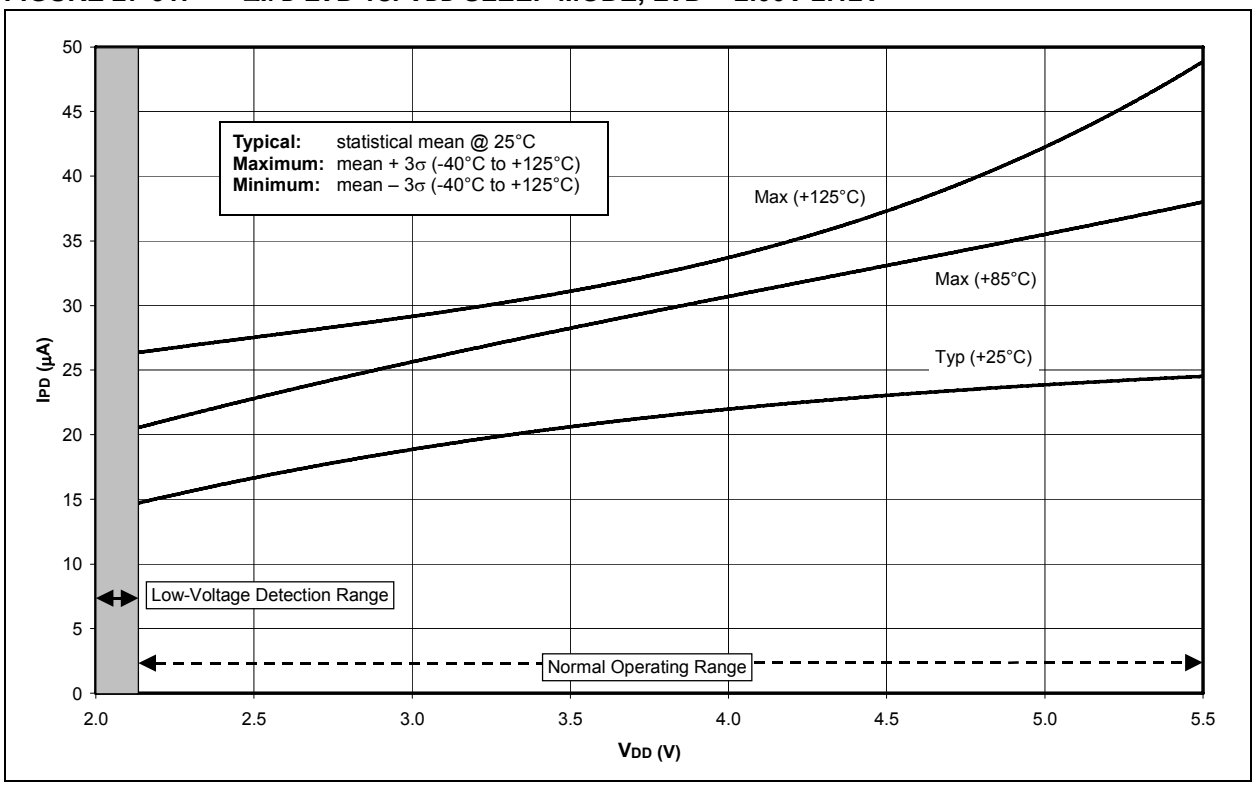

FIGURE 27-32: ΔIPD BOR vs. VDD, -40°C TO +125°C SLEEP MODE, BOR ENABLED AT 2.00V-2.16V

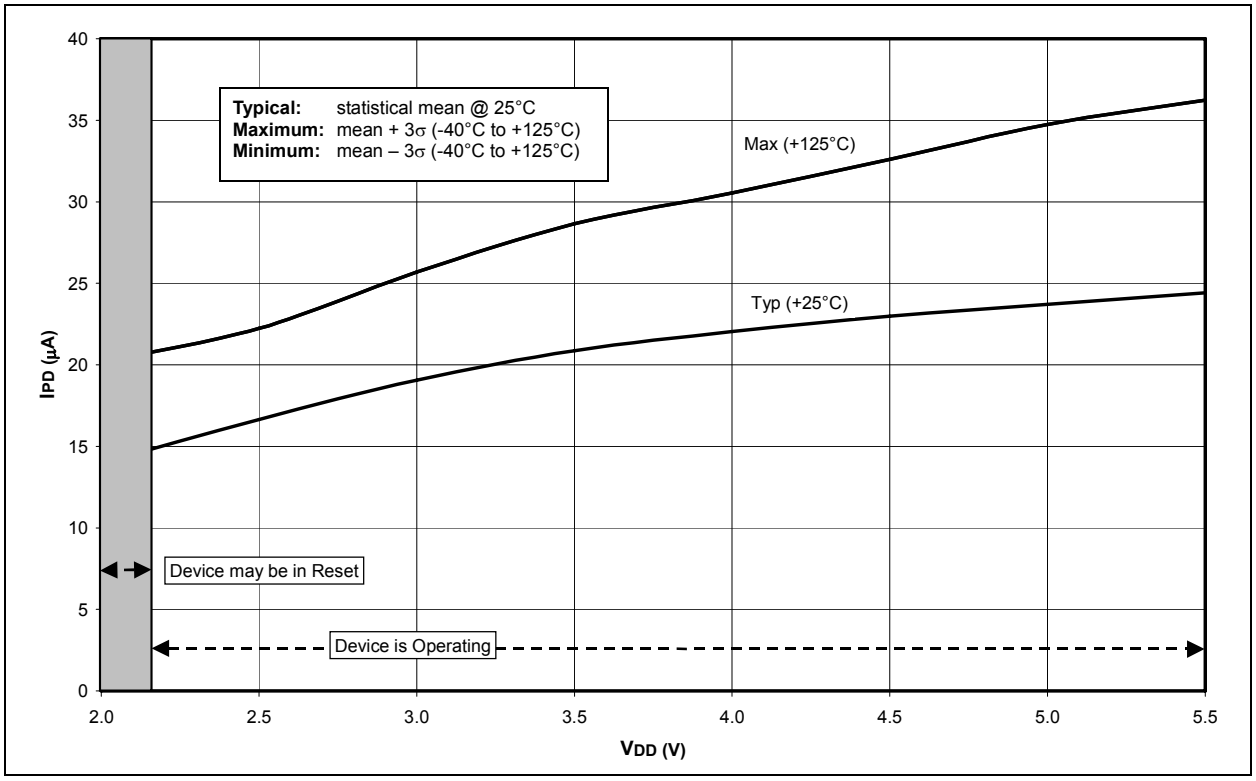

© 2007 Microchip Technology Inc.

FIGURE 27-33: ΔIPD A/D, -40°C TO +125°C SLEEP MODE, A/D ENABLED (NOT CONVERTING)

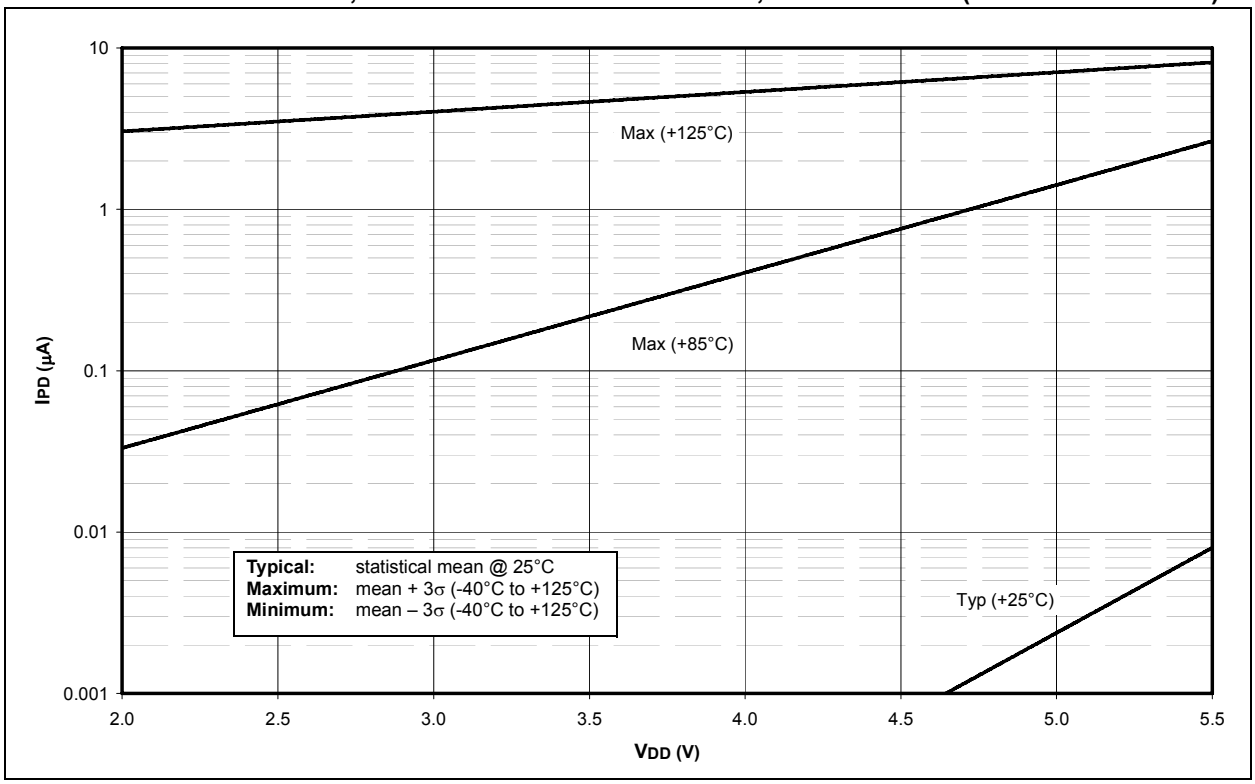

FIGURE 27-34: AVERAGE FOSC vs. VDD FOR VARIOUS R'S EXTERNAL RC MODE, C = 20 pF, TEMPERATURE = +25°C

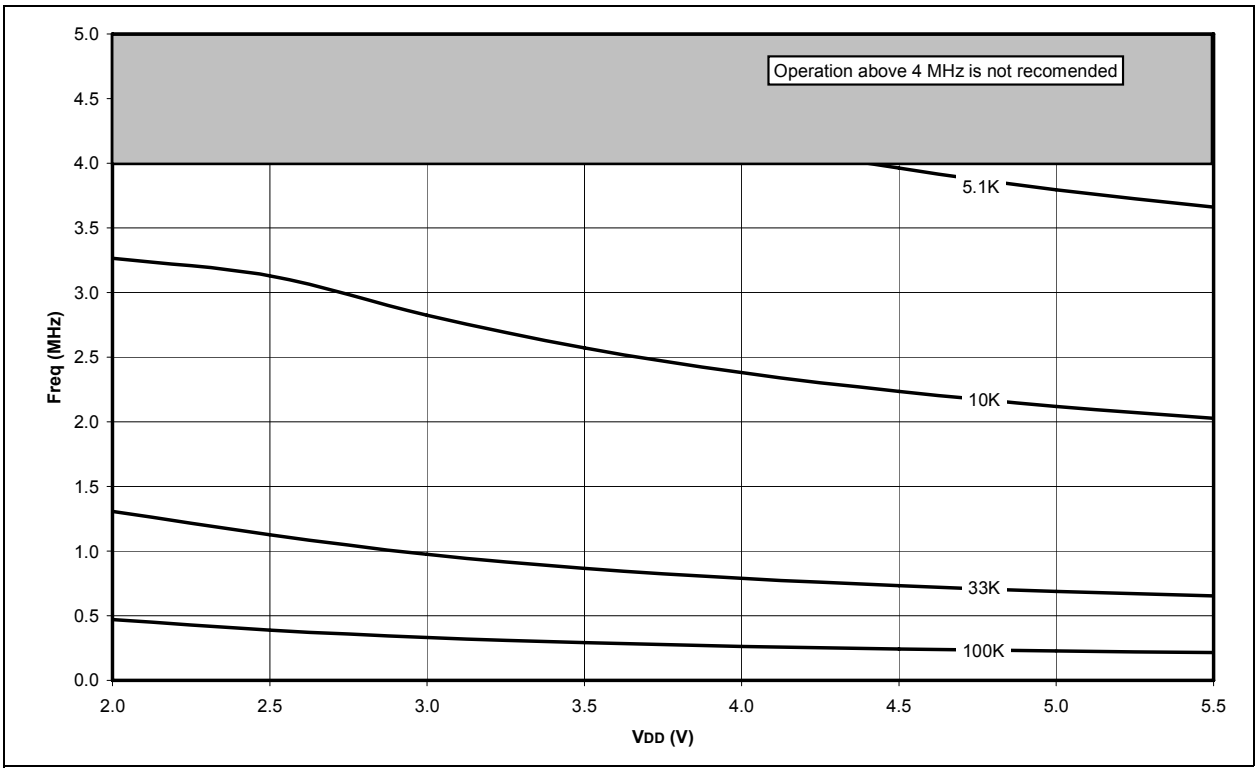

FIGURE 27-35: AVERAGE FOSC vs. VDD FOR VARIOUS R'S EXTERNAL RC MODE, C = 100 pF, TEMPERATURE = +25°C

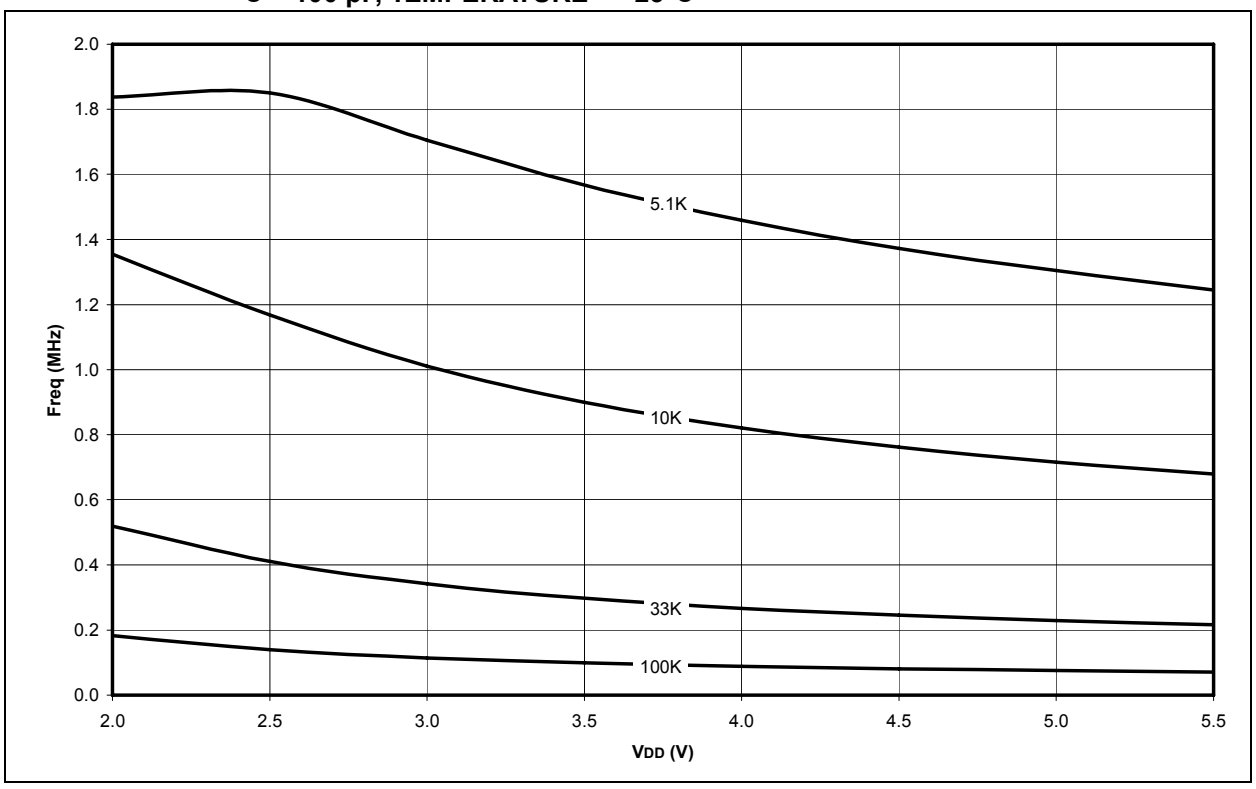

FIGURE 27-36: AVERAGE FOSC vs. VDD FOR VARIOUS R'S EXTERNAL RC MODE, C = 300 pF, TEMPERATURE = +25°C

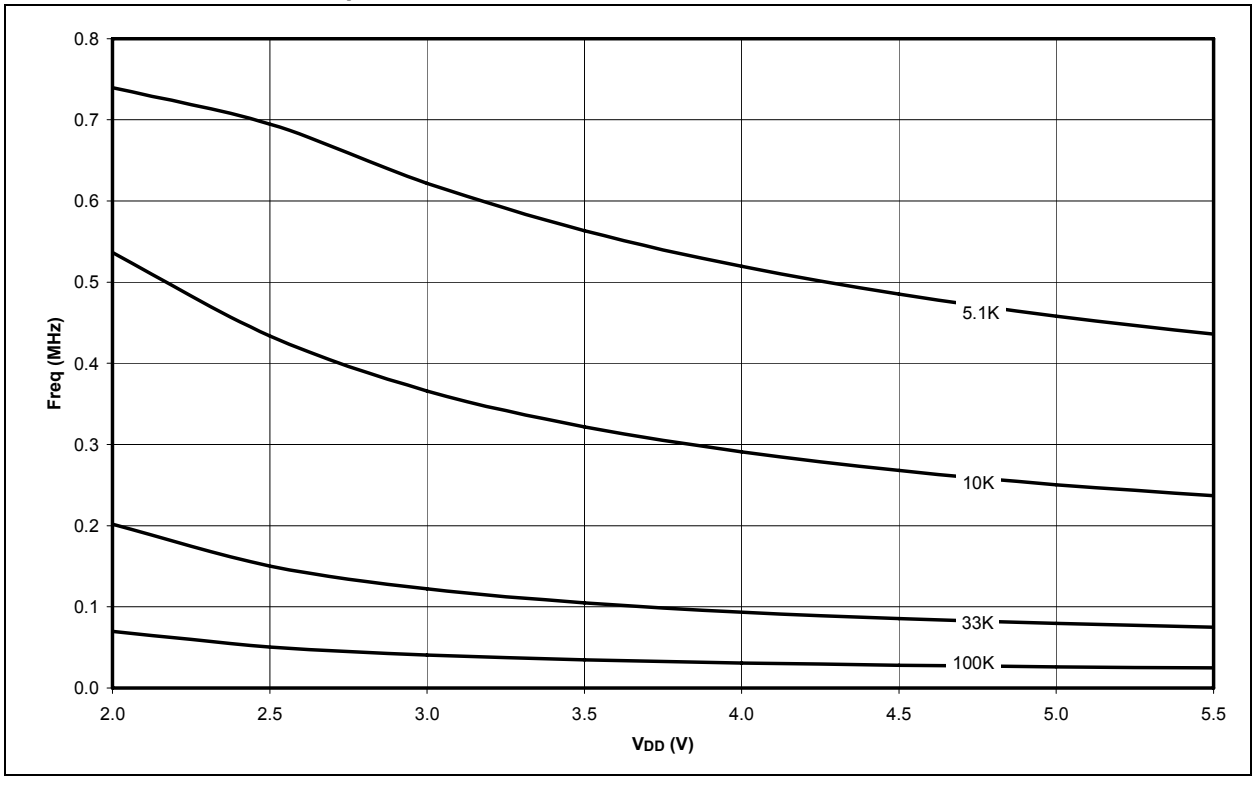

© 2007 Microchip Technology Inc.

28.0 PACKAGING INFORMATION

28.1 Package Marking Information

28-Lead SPDIP

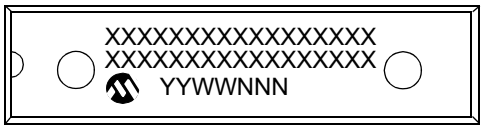

Example

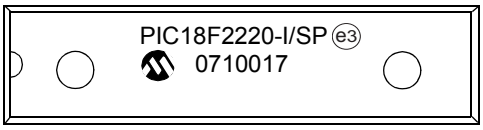

28-Lead SOIC

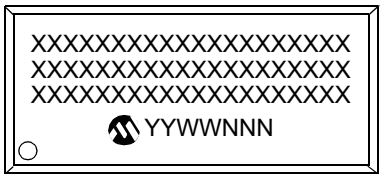

Example

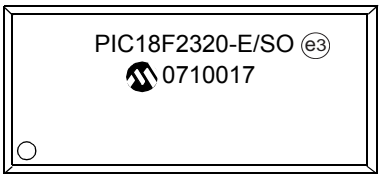

40-Lead PDIP

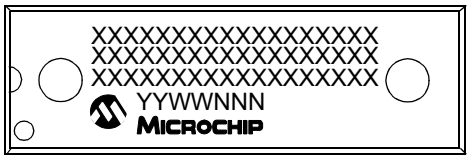

Example

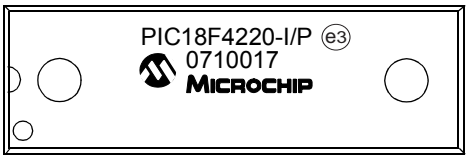

Legend:	XX...X	Customer-specific information
	Y	Year code (last digit of calendar year)
	YY	Year code (last 2 digits of calendar year)
	WW	Week code (week of January 1 is week '01')
	NNN	Alphanumeric traceability code
	(e3)	Pb-free JEDEC designator for Matte Tin (Sn)
	*	This package is Pb-free. The Pb-free JEDEC designator ((e3)) can be found on the outer packaging for this package.

Note: In the event the full Microchip part number cannot be marked on one line, it will be carried over to the next line, thus limiting the number of available characters for customer-specific information.

Package Marking Information (Continued)

44-Lead TQFP

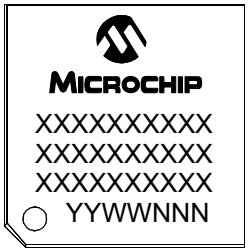

Example

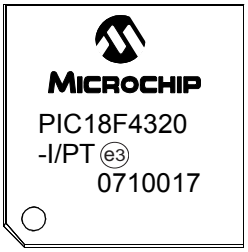

44-Lead QFN

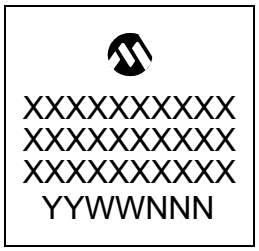

Example



© 2007 Microchip Technology Inc.

28.2 Package Details

The following sections give the technical details of the packages.

28-Lead Skinny Plastic Dual In-Line (SP) – 300 mil Body [SPDIP]

Note: For the most current package drawings, please see the Microchip Packaging Specification located at http://www.microchip.com/packaging

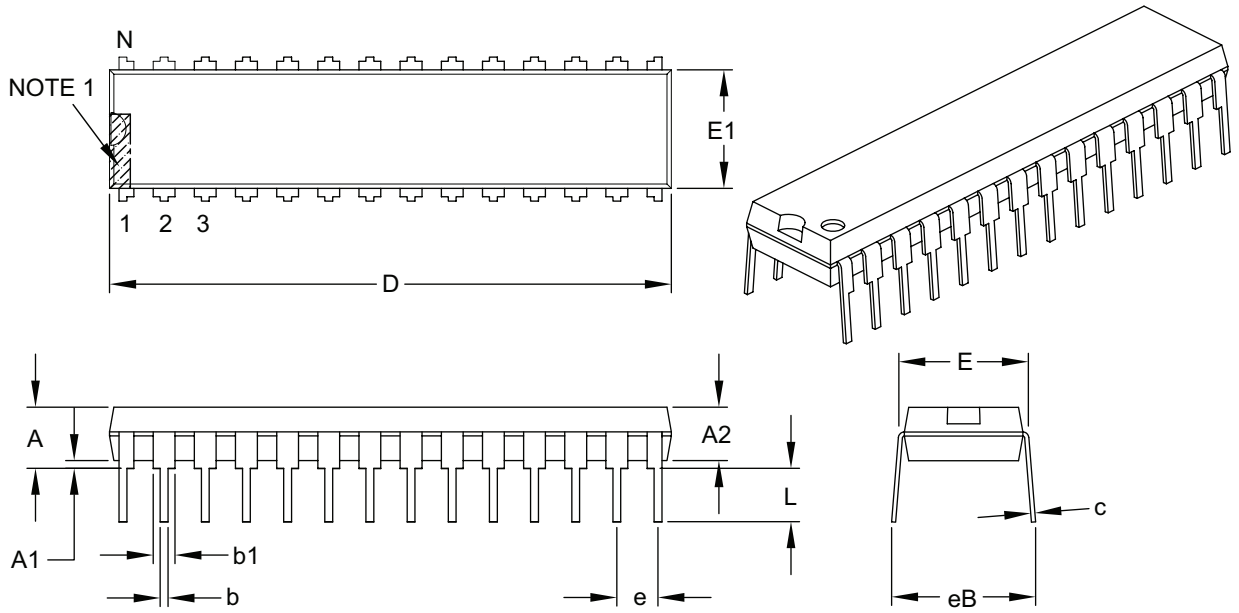

Units		INCHES		
Dimension Limits		MIN	NOM	MAX
Number of Pins	N		28	
Pitch	e		.100 BSC	
Top to Seating Plane	A	–	–	.200
Molded Package Thickness	A2	.120	.135	.150
Base to Seating Plane	A1	.015	–	–
Shoulder to Shoulder Width	E	.290	.310	.335
Molded Package Width	E1	.240	.285	.295
Overall Length	D	1.345	1.365	1.400
Tip to Seating Plane	L	.110	.130	.150
Lead Thickness	c	.008	.010	.015
Upper Lead Width	b1	.040	.050	.070
Lower Lead Width	b	.014	.018	.022
Overall Row Spacing §	eB	–	–	.430

Notes:

1. Pin 1 visual index feature may vary, but must be located within the hatched area.
2. § Significant Characteristic.
3. Dimensions D and E1 do not include mold flash or protrusions. Mold flash or protrusions shall not exceed .010" per side.
4. Dimensioning and tolerancing per ASME Y14.5M.

   BSC: Basic Dimension. Theoretically exact value shown without tolerances.

Microchip Technology Drawing C04-070B

28-Lead Plastic Small Outline (SO) – Wide, 7.50 mm Body [SOIC]

Note: For the most current package drawings, please see the Microchip Packaging Specification located at http://www.microchip.com/packaging

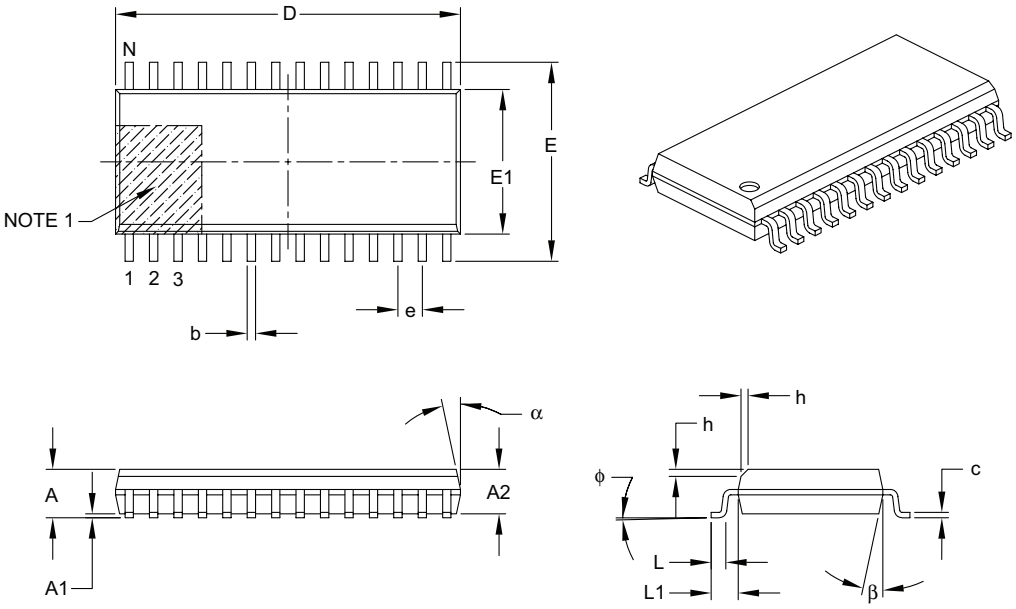

Units		MILLIMETERS		
Dimension Limits		MIN	NOM	MAX
Number of Pins	N		28	
Pitch	e		1.27 BSC	
Overall Height	A	–	–	2.65
Molded Package Thickness	A2	2.05	–	–
Standoff §	A1	0.10	–	0.30
Overall Width	E		10.30 BSC	
Molded Package Width	E1		7.50 BSC	
Overall Length	D		17.90 BSC	
Chamfer (optional)	h	0.25	–	0.75
Foot Length	L	0.40	–	1.27
Footprint	L1		1.40 REF	
Foot Angle Top	φ	0°	–	8°
Lead Thickness	c	0.18	–	0.33
Lead Width	b	0.31	–	0.51
Mold Draft Angle Top	α	5°	–	15°
Mold Draft Angle Bottom	β	5°	–	15°

Notes:

1. Pin 1 visual index feature may vary, but must be located within the hatched area.
2. § Significant Characteristic.
3. Dimensions D and E1 do not include mold flash or protrusions. Mold flash or protrusions shall not exceed 0.15 mm per side.
4. Dimensioning and tolerancing per ASME Y14.5M.

BSC: Basic Dimension. Theoretically exact value shown without tolerances.

REF: Reference Dimension, usually without tolerance, for information purposes only.

Microchip Technology Drawing C04-052B

© 2007 Microchip Technology Inc.

40-Lead Plastic Dual In-Line (P) – 600 mil Body [PDIP]

Note: For the most current package drawings, please see the Microchip Packaging Specification located at http://www.microchip.com/packaging

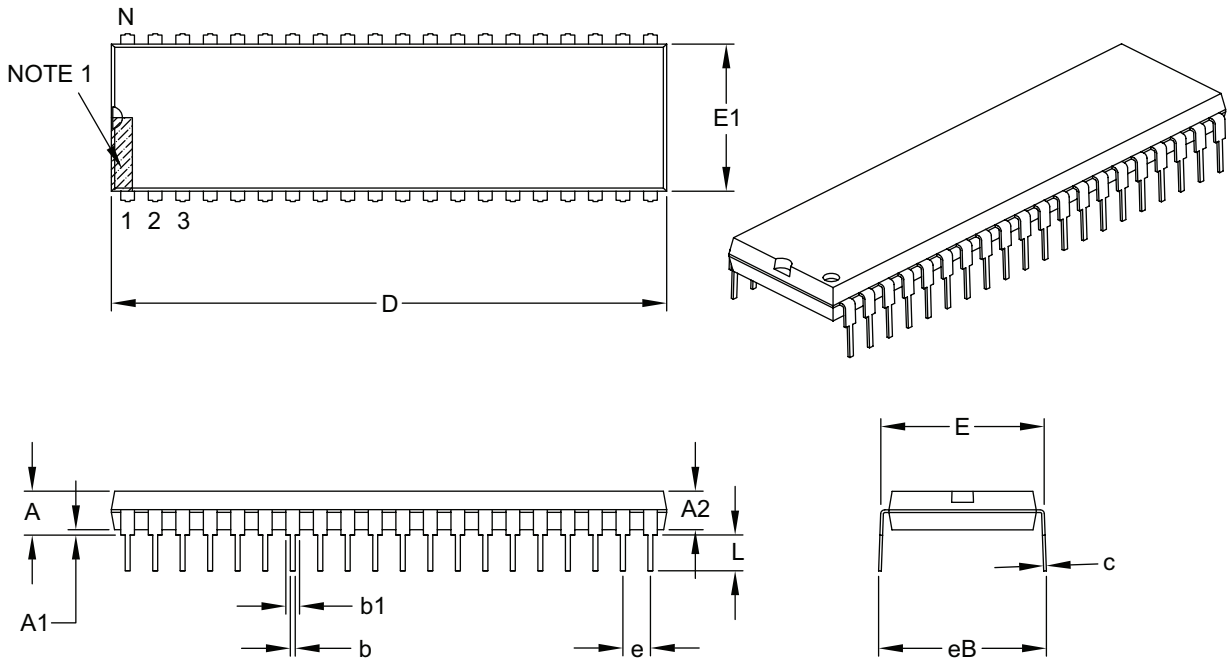

Units		INCHES		
Dimension Limits		MIN	NOM	MAX
Number of Pins	N		40	
Pitch	e		.100 BSC	
Top to Seating Plane	A	–	–	.250
Molded Package Thickness	A2	.125	–	.195
Base to Seating Plane	A1	.015	–	–
Shoulder to Shoulder Width	E	.590	–	.625
Molded Package Width	E1	.485	–	.580
Overall Length	D	1.980	–	2.095
Tip to Seating Plane	L	.115	–	.200
Lead Thickness	c	.008	–	.015
Upper Lead Width	b1	.030	–	.070
Lower Lead Width	b	.014	–	.023
Overall Row Spacing §	eB	–	–	.700

Notes:

1. Pin 1 visual index feature may vary, but must be located within the hatched area.
2. § Significant Characteristic.
3. Dimensions D and E1 do not include mold flash or protrusions. Mold flash or protrusions shall not exceed .010" per side.
4. Dimensioning and tolerancing per ASME Y14.5M.

BSC: Basic Dimension. Theoretically exact value shown without tolerances.

Microchip Technology Drawing C04-016B

44-Lead Plastic Thin Quad Flatpack (PT) – 10x10x1 mm Body, 2.00 mm [TQFP]

Note: For the most current package drawings, please see the Microchip Packaging Specification located at http://www.microchip.com/packaging

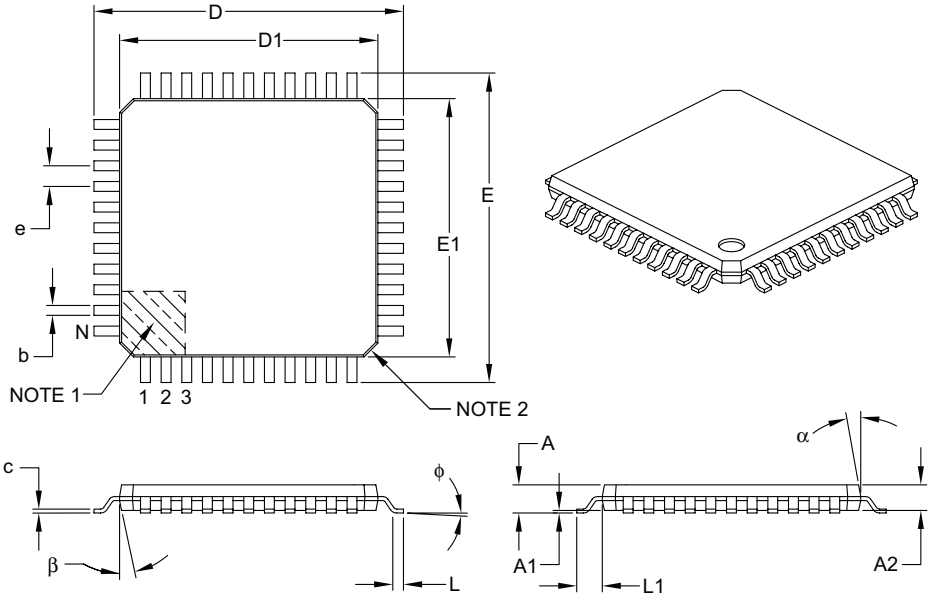

Units		MILLIMETERS		
Dimension Limits		MIN	NOM	MAX
Number of Leads	N		44	
Lead Pitch	e		0.80 BSC	
Overall Height	A	–	–	1.20
Molded Package Thickness	A2	0.95	1.00	1.05
Standoff	A1	0.05	–	0.15
Foot Length	L	0.45	0.60	0.75
Footprint	L1		1.00 REF	
Foot Angle	φ	0°	3.5°	7°
Overall Width	E		12.00 BSC	
Overall Length	D		12.00 BSC	
Molded Package Width	E1		10.00 BSC	
Molded Package Length	D1		10.00 BSC	
Lead Thickness	c	0.09	–	0.20
Lead Width	b	0.30	0.37	0.45
Mold Draft Angle Top	α	11°	12°	13°
Mold Draft Angle Bottom	β	11°	12°	13°

Notes:

1. Pin 1 visual index feature may vary, but must be located within the hatched area.
2. Chamfers at corners are optional; size may vary.
3. Dimensions D1 and E1 do not include mold flash or protrusions. Mold flash or protrusions shall not exceed 0.25 mm per side.
4. Dimensioning and tolerancing per ASME Y14.5M.

BSC: Basic Dimension. Theoretically exact value shown without tolerances.
REF: Reference Dimension, usually without tolerance, for information purposes only.

Microchip Technology Drawing C04-076B

© 2007 Microchip Technology Inc.

44-Lead Plastic Thin Quad Flatpack (PT) – 10x10x1 mm Body, 2.00 mm [TQFP]

Note: For the most current package drawings, please see the Microchip Packaging Specification located at http://www.microchip.com/packaging

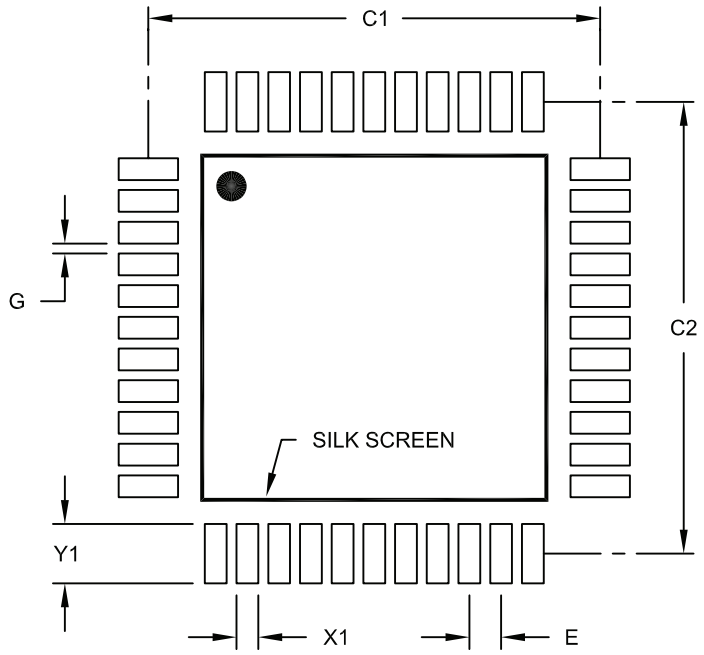

RECOMMENDED LAND PATTERN

Units		MILLIMETERS		
Dimension Limits		MIN	NOM	MAX
Contact Pitch	E		0.80 BSC	
Contact Pad Spacing	C1		11.40	
Contact Pad Spacing	C2		11.40	
Contact Pad Width (X44)	X1			0.55
Contact Pad Length (X44)	Y1			1.50
Distance Between Pads	G	0.25		

Notes:

1. Dimensioning and tolerancing per ASME Y14.5M

BSC: Basic Dimension. Theoretically exact value shown without tolerances.

Microchip Technology Drawing No. C04-2076A

44-Lead Plastic Quad Flat, No Lead Package (ML) – 8x8 mm Body [QFN]

Note: For the most current package drawings, please see the Microchip Packaging Specification located at http://www.microchip.com/packaging

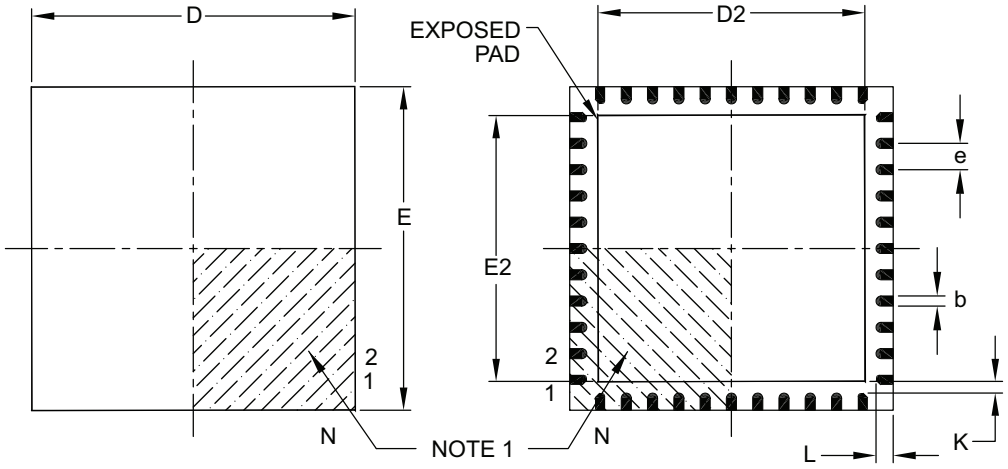

TOP VIEW **BOTTOM VIEW**

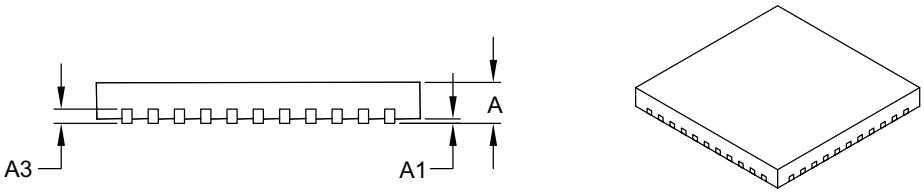

Units		MILLIMETERS		
Dimension Limits		MIN	NOM	MAX
Number of Pins	N		44	
Pitch	e		0.65 BSC	
Overall Height	A	0.80	0.90	1.00
Standoff	A1	0.00	0.02	0.05
Contact Thickness	A3		0.20 REF	
Overall Width	E		8.00 BSC	
Exposed Pad Width	E2	6.30	6.45	6.80
Overall Length	D		8.00 BSC	
Exposed Pad Length	D2	6.30	6.45	6.80
Contact Width	b	0.25	0.30	0.38
Contact Length	L	0.30	0.40	0.50
Contact-to-Exposed Pad	K	0.20	–	–

Notes:

1. Pin 1 visual index feature may vary, but must be located within the hatched area.
2. Package is saw singulated.
3. Dimensioning and tolerancing per ASME Y14.5M.

BSC: Basic Dimension. Theoretically exact value shown without tolerances.

REF: Reference Dimension, usually without tolerance, for information purposes only.

Microchip Technology Drawing C04-103B

© 2007 Microchip Technology Inc.

44-Lead Plastic Quad Flat, No Lead Package (ML) – 8x8 mm Body [QFN]

Note: For the most current package drawings, please see the Microchip Packaging Specification located at http://www.microchip.com/packaging

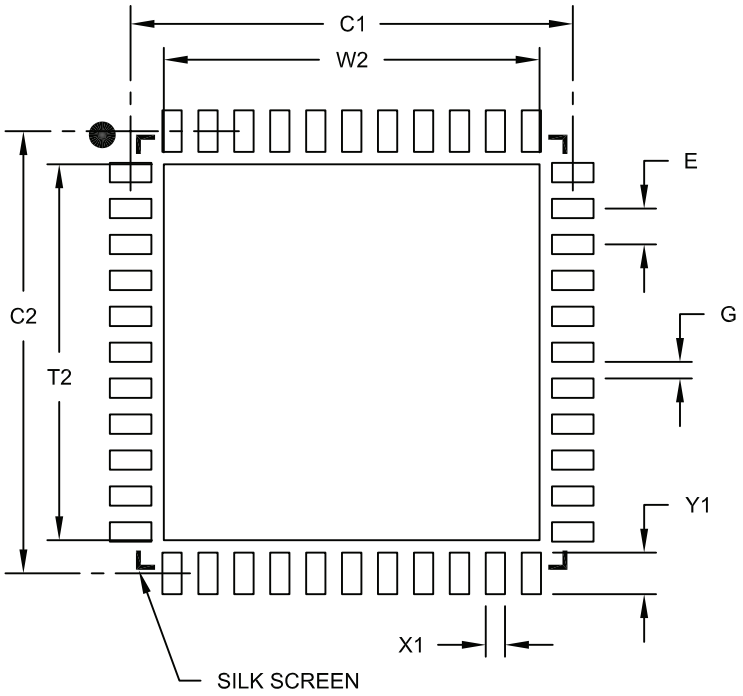

RECOMMENDED LAND PATTERN

Units		MILLIMETERS		
Dimension Limits		MIN	NOM	MAX
Contact Pitch	E		0.65 BSC	
Optional Center Pad Width	W2			6.80
Optional Center Pad Length	T2			6.80
Contact Pad Spacing	C1		8.00	
Contact Pad Spacing	C2		8.00	
Contact Pad Width (X44)	X1			0.35
Contact Pad Length (X44)	Y1			0.80
Distance Between Pads	G	0.25		

Notes:

1. Dimensioning and tolerancing per ASME Y14.5M

BSC: Basic Dimension. Theoretically exact value shown without tolerances.

Microchip Technology Drawing No. C04-2103A

NOTES:

© 2007 Microchip Technology Inc.

APPENDIX A: REVISION HISTORY

Revision A (June 2002)

Original data sheet for PIC18F2X20/4X20 devices.

Revision B (October 2002)

This revision includes major changes to **Section 2.0 "Oscillator Configurations"** and **Section 3.0 "Power-Managed Modes"**, updates to the Electrical Specifications in **Section 26.0 "Electrical Characteristics"** and minor corrections to the data sheet text.

Revision C (October 2003)

This revision includes updates to the Electrical Specifications in **Section 26.0 "Electrical Characteristics"** and to the DC Characteristics Graphs and Charts in **Section 27.0 "DC and AC Characteristics Graphs and Tables"** and minor corrections to the data sheet text.

Revision D (October 2006)

This revision includes updates to the packaging diagrams.

Revision E (January 2007)

This revision includes updates to the packaging diagrams.

Revision F (February 2007)

This revision includes updates to the packaging diagrams.

Revision G (December 2007)

- Modified OSCTUNE register data and added OSCTUN2 register data to **Section 2.6 "Internal Oscillator Block"** and Table 4-3 and Table 5-1.
- Changed Brown-out Voltage values in **Section 26.1 "DC Characteristics: Supply Voltage PIC18F2220/2320/4220/4320 (Industrial) PIC18LF2220/2320/4220/4320 (Industrial)"**.
- Updated low-voltage detect values in Table 26-4.
- Removed RE3 pin references for PIC18F2220/2320 devices in **Section 1.0 "Device Overview"**, **Section 5.0 "Memory Organization"**, **Section 10.0 "I/O Ports"**, **Section 19.0 "10-bit Analog-to-Digital Converter (A/D) Module"** and **Section 23.0 "Special Features of the CPU"**.
- Made minor changes to **Section 17.3.3 "Enabling SPI I/O"**; Table 1-2, Table 1-3, Table 3-3, Table 12-1 and Table 26-2; Figure 12-3 and Figure 16-1; Example 10-1 and Example 10-2; and Table 21-1 and Table 23-1.

APPENDIX B: DEVICE DIFFERENCES

The differences between the devices listed in this data sheet are shown in Table B-1.

TABLE B-1: DEVICE DIFFERENCES

Features	PIC18F2220	PIC18F2320	PIC18F4220	PIC18F4320
Program Memory (Bytes)	4096	8192	4096	8192
Program Memory (Instructions)	2048	4096	2048	4096
Interrupt Sources	19	19	20	20
I/O Ports	Ports A, B, C, (E)	Ports A, B, C, (E)	Ports A, B, C, D, E	Ports A, B, C, D, E
Capture/Compare/PWM Modules	2	2	1	1
Enhanced Capture/Compare/ PWM Modules	0	0	1	1
Parallel Communications (PSP)	No	No	Yes	Yes
10-bit Analog-to-Digital Module	10 Input Channels	10 Input Channels	13 Input Channels	13 Input Channels
Packages	28-Pin SPDIP 28-Pin SOIC	28-Pin SPDIP 28-Pin SOIC	40-Pin PDIP 44-Pin TQFP 44-Pin QFN	40-Pin PDIP 44-Pin TQFP 44-Pin QFN

© 2007 Microchip Technology Inc.

APPENDIX C: CONVERSION CONSIDERATIONS

This appendix discusses the considerations for converting from previous versions of a device to the ones listed in this data sheet. Typically, these changes are due to the differences in the process technology used. An example of this type of conversion is from a PIC16C74A to a PIC16C74B.

Not Applicable

APPENDIX D: MIGRATION FROM BASELINE TO ENHANCED DEVICES

This section discusses how to migrate from a Baseline device (i.e., PIC16C5X) to an Enhanced MCU device (i.e., PIC18FXXX).

The following are the list of modifications over the PIC16C5X microcontroller family:

Not Currently Available

APPENDIX E: MIGRATION FROM MID-RANGE TO ENHANCED DEVICES

A detailed discussion of the differences between the mid-range MCU devices (i.e., PIC16CXXX) and the enhanced devices (i.e., PIC18FXXX) is provided in *AN716, "Migrating Designs from PIC16C74A/74B to PIC18C442."* The changes discussed, while device specific, are generally applicable to all mid-range to enhanced device migrations.

This Application Note is available as Literature Number DS00716.

APPENDIX F: MIGRATION FROM HIGH-END TO ENHANCED DEVICES

A detailed discussion of the migration pathway and differences between the high-end MCU devices (i.e., PIC17CXXX) and the enhanced devices (i.e., PIC18FXXX) is provided in *AN726, "PIC17CXXX to PIC18CXXX Migration."* This Application Note is available as Literature Number DS00726.

© 2007 Microchip Technology Inc.

INDEX

A

A/D 211
A/D Converter Interrupt, Configuring 215
Acquisition Requirements 216
ADCON0 Register 211
ADCON1 Register 211
ADCON2 Register 211
ADRESH Register 211, 214
ADRESL Register 211
Analog Port Pins, Configuring 218
Associated Registers 220
Automatic Acquisition Time 217
Configuring the Module 215
Conversion Clock (Tad) 217
Conversion Status (GO/DONE Bit) 214
Conversions 219
Converter Characteristics 345
Operation in Power-Managed Modes 218
Special Event Trigger (CCP) 136, 220
Use of the CCP2 Trigger 220
Vref+ and Vref- References 216
Absolute Maximum Ratings 305
AC (Timing) Characteristics 326
Load Conditions for Device Timing Specifications 327
Parameter Symbology 326
Temperature and Voltage Specifications 327
Timing Conditions 327
Access Bank 65
ACKSTAT Status Flag 185
ADCON0 Register 211
GO/DONE Bit 214
ADCON1 Register 211
ADCON2 Register 211
ADDLW 263
Addressable Universal Synchronous Asynchronous Receiver Transmitter. *See* USART
ADDWF 263
ADDWFC 264
ADRESH Register 211
ADRESL Register 211, 214
Analog-to-Digital Converter. *See* A/D.
ANDLW 264
ANDWF 265
Assembler
MPASM Assembler 302

B

Bank Select Register (BSR) 65
Baud Rate Generator 181
BC 265
BCF 266
BF Status Flag 185
Block Diagrams
A/D 214
Analog Input Model 215
Baud Rate Generator 181
Capture Mode Operation 135
Comparator I/O Operating Modes 222
Comparator Output 224
Comparator Voltage Reference 228
Compare Mode Operation 136
External Power-on Reset Circuit (Slow VDD Power-up) 44
Fail-Safe Clock Monitor 249
Generic I/O Port Operation 101
Interrupt Logic 88
Low-Voltage Detect (LVD) 232
Low-Voltage Detect (LVD) with External Input 232
MCLR/Vpp/RE3 Pin 112
MSSP (I^2C Master Mode) 179
MSSP (I^2C Mode) 164
MSSP (SPI Mode) 155
On-Chip Reset Circuit 43
PIC18F2220/2320 9
PIC18F4220/4320 10
PLL 20
PORTC (Peripheral Output Override) 107
PORTD and PORTE (Parallel Slave Port) 114
PWM (Enhanced) 143
PWM (Standard) 138
RA3:RA0 and RA5 Pins 102
RA4/T0CKI Pin 102
RA6 Pin 102
RA7 Pin 102
RB2:RB0 Pins 105
RB3/CCP2 Pin 105
RB4 Pin 105
RB7:RB5 Pins 104
RD4:RD0 Pins 110
RD7:RD5 Pins 109
RE2:RE0 Pins 111
Reads from Flash Program Memory 75
System Clock 26
Table Read Operation 71
Table Write Operation 72
Table Writes to Flash Program Memory 77
Timer0 in 16-Bit Mode 118
Timer0 in 8-Bit Mode 118
Timer1 122
Timer1 (16-Bit Read/Write Mode) 122
Timer2 128
Timer3 130
Timer3 (16-Bit Read/Write Mode) 130
USART Receive 204
USART Transmit 202
Watchdog Timer 246
BN 266
BNC 267
BNN 267
BNOV 268
BNZ 268
BOR. *See* Brown-out Reset.
BOV 271
BRA 269
BRG. *See* Baud Rate Generator.
Brown-out Reset (BOR) 44, 237
BSF 269
BTFSC 270
BTFSS 270
BTG 271
BZ 272

C

C Compilers
- MPLAB C18 ... 302
- MPLAB C30 ... 302

CALL ... 272
Capture (CCP Module) ... 135
- Associated Registers ... 137
- CCP Pin Configuration ... 135
- CCPR1H:CCPR1L Registers ... 135
- Software Interrupt ... 135
- Timer1/Timer3 Mode Selection ... 135

Capture (ECCP Module) ... 142
Capture/Compare/PWM (CCP) ... 133
- Capture Mode. *See* Capture.
- CCP1 ... 134
  - CCPR1H Register ... 134
  - CCPR1L Register ... 134
- CCP2 ... 134
  - CCPR2H Register ... 134
  - CCPR2L Register ... 134
- Compare Mode. *See* Compare.
- Interaction of Two CCP Modules ... 134
- PWM Mode. *See* PWM.
- Timer Resources ... 134

Clock Sources ... 25
- Selection Using OSCCON Register ... 25

Clocking Scheme/Instruction Cycle ... 57
CLRF ... 273
CLRWDT ... 273
Code Examples
- 16 x 16 Signed Multiply Routine ... 86
- 16 x 16 Unsigned Multiply Routine ... 86
- 8 x 8 Signed Multiply Routine ... 85
- 8 x 8 Unsigned Multiply Routine ... 85
- Changing Between Capture Prescalers ... 135
- Computed GOTO Using an Offset Value ... 59
- Data EEPROM Read ... 83
- Data EEPROM Refresh Routine ... 84
- Data EEPROM Write ... 83
- Erasing a Flash Program Memory Row ... 76
- Fast Register Stack ... 56
- How to Clear RAM (Bank 1) Using Indirect Addressing ... 66
- Implementing a Real-Time Clock Using a Timer1 Interrupt Service ... 125
- Initializing PORTA ... 101
- Initializing PORTB ... 104
- Initializing PORTC ... 107
- Initializing PORTD ... 109
- Initializing PORTE ... 111
- Loading the SSPBUF (SSPSR) Register ... 158
- Reading a Flash Program Memory Word ... 75
- Saving STATUS, WREG and BSR Registers in RAM ... 99
- Writing to Flash Program Memory ... 78–79

Code Protection ... 237, 252
COMF ... 274
Comparator ... 221
- Analog Input Connection Considerations ... 225
- Associated Registers ... 226
- Configuration ... 221
- Effects of a Reset ... 225
- Interrupts ... 224
- Operation ... 223
- Operation in Power-Managed Modes ... 225
- Outputs ... 223
- Reference ... 223
- Response Time ... 223

Comparator Specifications ... 322
Comparator Voltage Reference ... 227
- Accuracy and Error ... 228
- Associated Registers ... 229
- Configuring ... 227
- Connection Considerations ... 228
- Effects of a Reset ... 228
- Operation in Power-Managed Modes ... 228

Compare (CCP Module) ... 136
- Associated Registers ... 137
- CCP Pin Configuration ... 136
- CCPR1 Register ... 136
- Software Interrupt ... 136
- Special Event Trigger ... 136, 220
- Timer1/Timer3 Mode Selection ... 136

Compare (ECCP Mode) ... 142
Computed GOTO ... 59
Configuration Bits ... 237
Configuration Register Protection ... 255
Context Saving During Interrupts ... 99
Control Registers
- EECON1 and EECON2 ... 72

Conversion Considerations ... 377
CPFSEQ ... 274
CPFSGT ... 275
CPFSLT ... 275
Crystal Oscillator/Ceramic Resonator ... 19
Customer Change Notification Service ... 389
Customer Notification Service ... 389
Customer Support ... 389

D

Data EEPROM Code Protection ... 255
Data EEPROM Memory ... 81
- Associated Registers ... 84
- EEADR Register ... 81
- EECON1 and EECON2 Registers ... 81
- Operation During Code-Protect ... 84
- Protection Against Spurious Write ... 83
- Reading ... 83
- Using ... 84
- Write Verify ... 83
- Writing ... 83

Data Memory ... 59
- General Purpose Registers ... 59
- Map for PIC18F2X20/4X20 ... 60
- Special Function Registers ... 61

DAW ... 276
DC and AC Characteristics
- Graphs and Tables ... 347

DC Characteristics ... 319
- Power-Down and Supply Current ... 310
- Supply Voltage ... 308

DCFSNZ ... 277
DECF ... 276
DECFSZ ... 277
Development Support ... 301
Device Differences ... 376
Device Overview ... 7
- Features (table) ... 8
- New Core Features ... 7
- Other Special Features ... 7

Direct Addressing ... 67

© 2007 Microchip Technology Inc.

E

ECCP 141
Auto-Shutdown 149
And Automatic Restart 151
Capture and Compare Modes 142
Outputs 142
Standard PWM Mode 142
Start-up Considerations 151
Effects of Power-Managed Modes on
Various Clock Sources 28
Electrical Characteristics 305
Enhanced Capture/Compare/PWM (ECCP) 141
Capture Mode. *See* Capture (ECCP Module).
PWM Mode. *See* PWM (ECCP Module).
Enhanced CCP Auto-Shutdown 149
Enhanced PWM Mode. *See* PWM (ECCP Module). 143
Equations
Calculating the Minimum Required
Acquisition Time 216
16 x 16 Signed Multiplication Algorithm 86
16 x 16 Unsigned Multiplication Algorithm 86
A/D Acquisition Time 216
A/D Minimum Holding Capacitor 216
Errata 5
External Clock Input 21

F

Fail-Safe Clock Monitor 237, 249
Interrupts in Power-Managed Modes 251
POR or Wake from Sleep 251
WDT During Oscillator Failure 249
Fast Register Stack 56
Firmware Instructions 257
Flash Program Memory 71
Associated Registers 79
Control Registers 72
Erase Sequence 76
Erasing 76
Operation During Code-Protect 79
Reading 75
TABLAT Register 74
Table Pointer 74
Boundaries Based on Operation 74
Table Pointer Boundaries 74
Table Reads and Table Writes 71
Unexpected Termination of Write Operation 79
Write Verify 79
Writing to 77
FSCM. *See* Fail-Safe Clock Monitor.

G

GOTO 278

H

Hardware Multiplier 85
Introduction 85
Operation 85
Performance Comparison 85
HSPLL 20

I

I/O Ports 101
I^2C Mode
ACK Pulse 168, 169
Acknowledge Sequence Timing 188
Baud Rate Generator 181
Bus Collision During a Repeated
Start Condition 192
Bus Collision During a Start Condition 190
Bus Collision During a Stop Condition 193
Clock Arbitration 182
Clock Stretching 174
Effect of a Reset 189
General Call Address Support 178
Master Mode 179
Master Mode (Reception, 7-Bit Address) 187
Master Mode Operation 180
Master Mode Reception 185
Master Mode Repeated Start Condition Timing 184
Master Mode Start Condition Timing 183
Master Mode Transmission 185
Multi-Master Communication, Bus Collision
and Bus Arbitration 189
Multi-Master Mode 189
Operation 168
Operation in Power-Managed Mode 189
Read/Write Bit Information (R/W Bit) 168, 169
Registers 164
Serial Clock (RC3/SCK/SCL) 169
Slave Mode 168
Addressing 168
Reception 169
Transmission 169
Stop Condition Timing 188
ID Locations 237, 255
INCF 278
INCFSZ 279
In-Circuit Debugger 255
In-Circuit Serial Programming (ICSP) 237, 255
Indirect Addressing
INDF and FSR Registers 66
Operation 66
Indirect Addressing Operation 67
Indirect File Operand 59
INFSNZ 279
Initialization Conditions for all Registers 46–49
Instruction Cycle 57
Instruction Flow/Pipelining 57
Instruction Format 259
Instruction Set 257
ADDLW 263
ADDWF 263
ADDWFC 264
ANDLW 264
ANDWF 265
BC 265
BCF 266
BN 266
BNC 267
BNN 267
BNOV 268
BNZ 268
BOV 271
BRA 269
BSF 269

BTFSC 270
BTFSS 270
BTG 271
BZ 272
CALL 272
CLRF 273
CLRWDT 273
COMF 274
CPFSEQ 274
CPFSGT 275
CPFSLT 275
DAW 276
DCFSNZ 277
DECF 276
DECFSZ 277
GOTO 278
INCF 278
INCFSZ 279
INFSNZ 279
IORLW 280
IORWF 280
LFSR 281
MOVF 281
MOVFF 282
MOVLB 282
MOVLW 283
MOVWF 283
MULLW 284
MULWF 284
NEGF 285
NOP 285
POP 286
PUSH 286
RCALL 287
Reset 287
RETFIE 288
RETLW 288
RETURN 289
RLCF 289
RLNCF 290
RRCF 290
RRNCF 291
SETF 291
SLEEP 292
SUBFWB 292
SUBLW 293
SUBWF 293
SUBWFB 294
SWAPF 295
TBLRD 296
TBLWT 297
TSTFSZ 298
XORLW 298
XORWF 299
Summary Table 260
INTCON Register
RBIF Bit 104
INTCON Registers 89
Inter-Integrated Circuit. *See* I^2C.
Internal Oscillator Block 22
Internal RC Oscillator
Use with WDT 246
Internet Address 389
Interrupt Sources 237
A/D Conversion Complete 215
Capture Complete (CCP) 135
Compare Complete (CCP) 136
Interrupt-on-Change (RB7:RB4) 104
INTx Pin 99
PORTB, Interrupt-on-Change 99
TMR0 99
TMR1 Overflow 121
TMR2 to PR2 Match 128
TMR2 to PR2 Match (PWM) 127, 138
TMR3 Overflow 129, 131
USART Receive/Transmit Complete 195
Interrupts 87
Interrupts, Enable Bits
CCP1 Enable (CCP1IE Bit) 135
Interrupts, Flag Bits
CCP1 Flag (CCP1IF Bit) 135
CCP1IF Flag (CCP1IF Bit) 136
Interrupt-on-Change (RB7:RB4) Flag
(RBIF Bit) 104
INTOSC Frequency Drift 40
INTOSC, INTRC. *See* Internal Oscillator Block.
IORLW 280
IORWF 280
IPR Registers 96

L

LFSR 281
Look-up Tables 59
Low-Voltage Detect 231
Characteristics 323
Effects of a Reset 235
Operation 234
Current Consumption 235
Reference Voltage Set Point 235
Operation During Sleep 235
Low-Voltage ICSP Programming 255
LVD. *See* Low-Voltage Detect. 231

M

Master Synchronous Serial Port (MSSP). *See* MSSP.
Master Synchronous Serial Port. *See* MSSP
Memory Organization 53
Data Memory 59
Program Memory 53
Memory Programming Requirements 321
Microchip Internet Web Site 389
Migration from Baseline to Enhanced Devices 377
Migration from High-End to Enhanced Devices 378
Migration from Mid-Range to Enhanced Devices 378
MOVF 281
MOVFF 282
MOVLB 282
MOVLW 283
MOVWF 283
MPLAB ASM30 Assembler, Linker, Librarian 302
MPLAB ICD 2 In-Circuit Debugger 303
MPLAB ICE 2000 High-Performance
Universal In-Circuit Emulator 303
MPLAB Integrated Development
Environment Software 301
MPLAB PM3 Device Programmer 303
MPLAB REAL ICE In-Circuit Emulator System 303

© 2007 Microchip Technology Inc.

MPLINK Object Linker/MPLIB Object Librarian 302
MSSP 155
Control Registers (General) 155
Enabling SPI I/O 159
I2C Master Mode 179
I2C Mode
I2C Mode. *See* I2C
I2C Slave Mode 168
Operation 158
Overview 155
Slave Select Control 161
SPI Master Mode 160
SPI Master/Slave Connection 159
SPI Mode 155
SPI Slave Mode 161
SSPBUF Register 160
SSPSR Register 160
TMR2 Output for Clock Shift 127, 128
Typical Connection 159
MULLW 284
MULWF 284

N

NEGF 285
NOP 285

O

Opcode Field Descriptions 258
Oscillator Configuration 19
EC 19
ECIO 19
HS 19
HSPLL 19
Internal Oscillator Block 22
INTIO1 19
INTIO2 19
LP 19
RC 19
RCIO 19
XT 19
Oscillator Selection 237
Oscillator Start-up Timer (OST) 28, 44, 237
Oscillator Switching 25
Oscillator Transitions 28
Oscillator, Timer1 ..... 121, 131
Oscillator, Timer3 129

P

Packaging Information 365
Details 367
Marking 365, 366
Parallel Slave Port (PSP) 109, 114
Associated Registers 115
$\overline{CS}$ (Chip Select) 113, 114
PORTD 114
$\overline{RD}$ (Read Input) 113, 114
RE0/AN5/$\overline{RD}$ Pin 113
RE1/AN6/$\overline{WR}$ Pin 113
RE2/AN7/$\overline{CS}$ Pin 113
Select (PSPMODE Bit) 109, 114
$\overline{WR}$ (Write Input) 113, 114
PICSTART Plus Development Programmer 304
PIE Registers 94
Pin Functions
$\overline{MCLR}$/Vpp/RE3 ..... 11, 14
OSC1/CLKI/RA7 ..... 11, 14
OSC2/CLKO/RA6 ..... 11, 14
RA0/AN0 ..... 11, 14
RA1/AN1 ..... 11, 14
RA2/AN2/Vref-/CVref 11, 14
RA3/AN3/Vref+ 11, 14
RA4/T0CKI/C1OUT 11, 14
RA5/AN4/$\overline{SS}$/LVDIN/C2OUT 11, 14
RB0/AN12/INT0 ..... 12, 15
RB1/AN10/INT1 ..... 12, 15
RB2/AN8/INT2 ..... 12, 15
RB3/AN9/CCP2 ..... 12, 15
RB4/AN11/KBI0 ..... 12, 15
RB5/KBI1/PGM 12, 15
RB6/KBI2/PGC 12, 15
RB7/KBI3/PGD 12
RB7/PGD 15
RC0/T1OSO/T1CKI 13, 16
RC1/T1OSI/CCP2 ..... 13, 16
RC2/CCP1/P1A 13, 16
RC3/SCK/SCL 13, 16
RC4/SDI/SDA 13, 16
RC5/SDO 13, 16
RC6/TX/CK 13, 16
RC7/RX/DT 13, 16
RD0/PSP0 17
RD1/PSP1 17
RD2/PSP2 17
RD3/PSP3 17
RD4/PSP4 17
RD5/PSP5/P1B 17
RD6/PSP6/P1C 17
RD7/PSP7/P1D 17
RE0/AN5/$\overline{RD}$ 18
RE1/AN6/$\overline{WR}$ 18
RE2/AN7/$\overline{CS}$ 18
RE3 18
VDD 13, 18
Vss 13, 18
Pinout I/O Descriptions
PIC18F2220/2320 11
PIC18F4220/4320 14
PIR Registers 92
PLL Lock Time-out 44
Pointer, FSRn 66
POP 286
POR. *See* Power-on Reset.
PORTA
Associated Registers 103
LATA Register 101
PORTA Register 101
TRISA Register 101
PORTB
Associated Registers 106
LATB Register 104
PORTB Register 104
RB7:RB4 Interrupt-on-Change Flag (RBIF Bit) 104
TRISB Register 104
PORTC
Associated Registers 108
LATC Register 107
PORTC Register 107
TRISC Register 107

PORTD
Associated Registers 110
LATD Register 109
Parallel Slave Port (PSP) Function 109
PORTD Register 109
TRISD Register 109
PORTE
Analog Port Pins 113
Associated Registers 113
LATE Register 111
PORTE Register 111
PSP Mode Select (PSPMODE Bit) 109
RE0/AN5/RD Pin 113
RE1/AN6/WR Pin 113
RE2/AN7/CS Pin 113
TRISE Register 111
Postscaler, WDT
Assignment (PSA Bit) 119
Rate Select (T0PS2:T0PS0 Bits) 119
Power-Managed Modes 29
Entering 30
Idle Modes 31
Run Modes 36
Sleep Mode 31
Summary (table) 29
Wake from 38
Power-on Reset (POR) 44, 237
Power-up Delays 28
Power-up Timer (PWRT) 28, 44, 237
Prescaler, Capture 135
Prescaler, Timer0 119
Assignment (PSA Bit) 119
Rate Select (T0PS2:T0PS0 Bits) 119
Prescaler, Timer2 139
Product Identification System 391
Program Counter
PCL Register 56
PCLATH Register 56
PCLATU Register 56
Program Memory
Instructions 58
Two-Word 58
Interrupt Vector 53
Map and Stack for PIC18F2220/4220 53
Map and Stack for PIC18F2320/4320 53
Reset Vector 53
Program Memory Code Protection 253
Program Verification 252
Program Verification and Code Protection
Associated Registers 252
Programming, Device Instructions 257
PSP. *See* Parallel Slave Port.
Pulse-Width Modulation. *See* PWM (CCP Module) and PWM (ECCP Module).
PUSH 286
PUSH and POP Instructions 55
PWM (CCP Module) 138
Associated Registers 139
CCPR1H:CCPR1L Registers 138
Duty Cycle 138
Example Frequencies/Resolutions 139
Period 138
Setup for PWM Operation 139
TMR2 to PR2 Match 127, 138
PWM (ECCP Module) 143
Associated Registers 153
Direction Change in Full-Bridge Output Mode 147
Effects of a Reset 152
Full-Bridge Application Example 147
Full-Bridge Mode 146
Half-Bridge Mode 145
Half-Bridge Output Mode Applications Example 145
Operation in Power-Managed Modes 152
Operation with Fail-Safe Clock Monitor 152
Output Configurations 143
Output Relationships (Active-High State) 144
Output Relationships (Active-Low State) 144
Programmable Dead-Band Delay 149
Setup for Operation 152
Shoot-Through Current 149
Start-up Considerations 151

Q

Q Clock 139

R

RAM. *See* Data Memory.
RC Oscillator 21
RCIO Oscillator Mode 21
RCALL 287
RCON Register
Bit Status During Initialization 45
Bits and Positions 45
RCSTA Register
SPEN Bit 195
Reader Response 390
Register File 59
Registers
ADCON0 (A/D Control 0) 211
ADCON1 (A/D Control 1) 212
ADCON2 (A/D Control 2) 213
CCP1CON (ECCP Control) 141
CCPxCON (CCPx Control) 133
CMCON (Comparator Control) 221
CONFIG1H (Configuration 1 High) 238
CONFIG2H (Configuration 2 High) 240
CONFIG2L (Configuration 2 Low) 239
CONFIG3H (Configuration 3 High) 241
CONFIG4L (Configuration 4 Low) 241
CONFIG5H (Configuration 5 High) 242
CONFIG5L (Configuration 5 Low) 242
CONFIG6H (Configuration 6 High) 243
CONFIG6L (Configuration 6 Low) 243
CONFIG7H (Configuration 7 High) 244
CONFIG7L (Configuration 7 Low) 244
CVRCON (Comparator Voltage Reference Control) 227
DEVID1 (Device ID 1) 245
DEVID2 (Device ID 2) 245
ECCPAS (Enhanced Capture/Compare/PWM Auto-Shutdown Control) 150
EECON1 (Data EEPROM Control 1) 73, 82
INTCON (Interrupt Control) 89
INTCON2 (Interrupt Control 2) 90
INTCON3 (Interrupt Control 3) 91
IPR1 (Peripheral Interrupt Priority 1) 96
IPR2 (Peripheral Interrupt Priority 2) 97
LVDCON (Low-Voltage Detect Control) 233
OSCCON (Oscillator Control) 27

© 2007 Microchip Technology Inc.

OSCTUN2 (INTRC Oscillator Tuning) 24
PIE1 (Peripheral Interrupt Enable 1) 94
PIE2 (Peripheral Interrupt Enable 2) 95
PIR1 (Peripheral Interrupt Request (Flag) 1) 92
PIR2 (Peripheral Interrupt Request (Flag) 2) 93
PWM1CON (PWM Configuration) 149
RCON (Reset Control) 69, 98
RCSTA (Receive Status and Control) 197
SSPCON1 (MSSP Control 1, I2C Mode) 166
SSPCON1 (MSSP Control 1, SPI Mode) 157
SSPCON2 (MSSP Control 2, I2C Master Mode) 167
SSPSTAT (MSSP Status, I2C Mode) 165
SSPSTAT (MSSP Status, SPI Mode) 156
STATUS 68
STKPTR (Stack Pointer) 55
Summary 62–64
T0CON (Timer0 Control) 117
T1CON (Timer1 Control) 121
T2CON (Timer2 Control) 127
T3CON (Timer3 Control) 129
TRISE 112
TXSTA (Transmit Status and Control) 196
WDTCON (Watchdog Timer Control) 247
Reset 43, 287
Resets 237
RETFIE 288
RETLW 288
RETURN 289
Return Address Stack 54
Return Stack Pointer (STKPTR) 54
Revision History 375
RLCF 289
RLNCF 290
RRCF 290
RRNCF 291

S

SCI. *See* USART
SCK 155
SDI 155
SDO 155
Serial Clock (SCK) Pin 155
Serial Communication Interface. *See* USART.
Serial Data In (SDI) Pin 155
Serial Data Out (SDO) Pin 155
Serial Peripheral Interface. *See* SPI Mode.
SETF 291
Shoot-Through Current 149
Slave Select ($\overline{SS}$) Pin 155
SLEEP 292
Sleep
OSC1 and OSC2 Pin States 28
Software Simulator (MPLAB SIM) 302
Special Event Trigger. *See* Compare (CCP Module).
Special Features of the CPU 237
Special Function Registers 61
Map 61
SPI Mode
Associated Registers 163
Bus Mode Compatibility 163
Effects of a Reset 163
Master in Power-Managed Modes 163
Master Mode 160
Master/Slave Connection 159
Registers 156
Serial Clock 155
Serial Data In 155
Serial Data Out 155
Slave in Power-Managed Modes 163
Slave Mode 161
Slave Select 155
SPI Clock 160
$\overline{SS}$ 155
SSPOV Status Flag 185
SSPSTAT Register
R/$\overline{W}$ Bit 168, 169
Stack Full/Underflow Resets 55
SUBFWB 292
SUBLW 293
SUBWF 293
SUBWFB 294
SWAPF 295

T

T0CON Register
PSA Bit 119
T0CS Bit 119
T0PS2:T0PS0 Bits 119
T0SE Bit 119
TABLAT Register 74
Table Pointer Operations (table) 74
Table Reads/Table Writes 59
TBLPTR Register 74
TBLRD 296
TBLWT 297
Time-out in Various Situations (table) 45
Time-out Sequence 44
Timer0 117
16-Bit Mode Timer Reads and Writes 119
Associated Registers 119
Clock Source Edge Select (T0SE Bit) 119
Clock Source Select (T0CS Bit) 119
Interrupt 119
Operation 119
Prescaler. *See* Prescaler, Timer0.
Switching Prescaler Assignment 119
Timer1 121
16-Bit Read/Write Mode 124
Associated Registers 125
Interrupt 124
Operation 122
Oscillator 121, 123
Oscillator Layout Considerations 123
Overflow Interrupt 121
Resetting, Using a Special Event Trigger Output (CCP) 124
Special Event Trigger (CCP) 136
TMR1H Register 121
TMR1L Register 121
Use as a Real-Time Clock 124

Timer2 127
  Associated Registers 128
  MSSP Clock Shift 127, 128
  Operation 127
  Postscaler. *See* Postscaler, Timer2.
  PR2 Register 127, 138
  Prescaler. *See* Prescaler, Timer2.
  TMR2 Register 127
  TMR2 to PR2 Match Interrupt 127, 128, 138
Timer3 129
  Associated Registers 131
  Operation 130
  Oscillator 129, 131
  Overflow Interrupt 129, 131
  Resetting, Using a Special Event Trigger Output (CCP) 131
  TMR3H Register 129
  TMR3L Register 129
Timing Diagrams
  A/D Conversion 346
  Acknowledge Sequence 188
  Asynchronous Reception 205
  Asynchronous Transmission 203
  Asynchronous Transmission (Back to Back) 203
  Baud Rate Generator with Clock Arbitration 182
  BRG Reset Due to SDA Arbitration During Start Condition 191
  Brown-out Reset (BOR) 331
  Bus Collision During a Repeated Start Condition (Case 1) 192
  Bus Collision During a Repeated Start Condition (Case 2) 192
  Bus Collision During a Stop Condition (Case 1) 193
  Bus Collision During a Stop Condition (Case 2) 193
  Bus Collision During Start Condition (SCL = 0) 191
  Bus Collision During Start Condition (SDA Only) 190
  Bus Collision for Transmit and Acknowledge 189
  Capture/Compare/PWM (CCP) 333
  CLKO and I/O 330
  Clock Synchronization 175
  Clock, Instruction Cycle 57
  Example SPI Master Mode (CKE = 0) 335
  Example SPI Master Mode (CKE = 1) 336
  Example SPI Slave Mode (CKE = 0) 337
  Example SPI Slave Mode (CKE = 1) 338
  External Clock (All Modes Except PLL) 328
  Fail-Safe Clock Monitor (FSCM) 250
  First Start Bit 183
  Full-Bridge PWM Output 146
  Half-Bridge PWM Output 145
  I^2C Bus Data 340
  I^2C Bus Start/Stop Bits 339
  I^2C Master Mode (Transmission, 7 or 10-Bit Address) 186
  I^2C Slave Mode (Transmission, 10-Bit Address) 173
  I^2C Slave Mode (Transmission, 7-Bit Address) 171
  I^2C Slave Mode with SEN = 0 (Reception, 10-Bit Address) 172
  I^2C Slave Mode with SEN = 0 (Reception, 7-Bit Address) 170
  I^2C Slave Mode with SEN = 1 (Reception, 10-Bit Address) 177
  I^2C Slave Mode with SEN = 1 (Reception, 7-Bit Address) 176
Low-Voltage Detect 234
Low-Voltage Detect Characteristics 322
Master SSP I^2C Bus Data 342
Master SSP I^2C Bus Start/Stop Bits 342
Parallel Slave Port (PIC18F4X20) 334
Parallel Slave Port (PSP) Read 115
Parallel Slave Port (PSP) Write 115
PWM Auto-Shutdown (PRSEN = 0, Auto-Restart Disabled) 151
PWM Auto-Shutdown (PRSEN = 1, Auto-Restart Enabled) 151
PWM Direction Change 148
PWM Direction Change at Near 100% Duty Cycle 148
PWM Output 138
Repeat Start Condition 184
Reset, Watchdog Timer (WDT), Oscillator Start-up Timer (OST), Power-up Timer (PWRT) 331
Slave Mode General Call Address Sequence (7 or 10-Bit Addressing Mode) 178
Slave Synchronization 161
Slow Rise Time ($\overline{MCLR}$ Tied to V_{DD}, V_{DD} Rise > T_{PWRT}) 51
SPI Mode (Master Mode) 160
SPI Mode (Slave Mode with CKE = 0) 162
SPI Mode (Slave Mode with CKE = 1) 162
Stop Condition Receive or Transmit Mode 188
Synchronous Transmission 206
Synchronous Transmission (Through TXEN) 207
Time-out Sequence on POR w/ PLL Enabled ($\overline{MCLR}$ Tied to V_{DD}) 51
Time-out Sequence on Power-up ($\overline{MCLR}$ Not Tied to V_{DD}): Case 1 50
Time-out Sequence on Power-up ($\overline{MCLR}$ Not Tied to V_{DD}): Case 2 50
Time-out Sequence on Power-up ($\overline{MCLR}$ Tied to V_{DD}, V_{DD} Rise T_{PWRT}) 50
Timer0 and Timer1 External Clock 332
Transition for Entry to SEC_IDLE Mode 34
Transition for Entry to SEC_RUN Mode 36
Transition for Entry to Sleep Mode 32
Transition for Two-Speed Start-up (INTOSC to HSPLL) 248
Transition for Wake from PRI_IDLE Mode 33
Transition for Wake from RC_RUN Mode (RC_RUN to PRI_RUN) 35
Transition for Wake from SEC_RUN Mode (HSPLL) 34
Transition for Wake from Sleep (HSPLL) 32
Transition to PRI_IDLE Mode 33
Transition to RC_IDLE Mode 35
Transition to RC_RUN Mode 37
USART Synchronous Receive (Master/Slave) 344
USART Synchronous Reception (Master Mode, SREN) 208
USART SynchronousTransmission (Master/Slave) . 344

© 2007 Microchip Technology Inc.

Timing Diagrams and Specifications 328
A/D Conversion Requirements 346
Capture/Compare/PWM Requirements 334
CLKO and I/O Requirements 330
DC Characteristics - Internal RC Accuracy 329
Example SPI Mode Requirements (Master Mode, CKE = 0) 336
Example SPI Mode Requirements (Master Mode, CKE = 1) 337
Example SPI Mode Requirements (Slave Mode, CKE = 0) 338
Example SPI Slave Mode Requirements (CKE = 1) 339
External Clock Requirements 328
I2C Bus Data Requirements (Slave Mode) 341
Master SSP I2C Bus Data Requirements 343
Master SSP I2C Bus Start/Stop Bits Requirements 342
Parallel Slave Port Requirements (PIC18F4X20) 335
PLL Clock 329
Reset, Watchdog Timer, Oscillator Start-up Timer, Power-up Timer and Brown-out Reset Requirements 332
Timer0 and Timer1 External Clock Requirements 333
USART Synchronous Receive Requirements 344
USART Synchronous Transmission Requirements 344
Top-of-Stack Access 54
TRISE Register
PSPMODE Bit 109
TSTFSZ 298
Two-Speed Start-up 237, 248
Two-Word Instructions
Example Cases 58
TXSTA Register
BRGH Bit 198

U

USART 195
Asynchronous Mode 202
Associated Registers, Receive 205
Associated Registers, Transmit 203
Receiver 204
Transmitter 202
Baud Rate Generator (BRG) 198
Associated Registers 198
Baud Rate Formula 198
Baud Rates, Asynchronous Mode (BRGH = 0, Low Speed) 199
Baud Rates, Asynchronous Mode (BRGH = 1, High Speed) 200
Baud Rates, Synchronous Mode (SYNC = 1) 201
High Baud Rate Select (BRGH Bit) 198
Operation in Power-Managed Mode 198
Sampling 198
Serial Port Enable (SPEN Bit) 195
Setting Up 9-Bit Mode with Address Detect 204
Synchronous Master Mode 206
Associated Registers, Reception 208
Associated Registers, Transmit 207
Reception 208
Transmission 206
Synchronous Slave Mode 209
Associated Registers, Receive 210
Associated Registers, Transmit 209
Reception 210
Transmission 209

V

Voltage Reference Specifications 322

W

Watchdog Timer (WDT) 237, 246
Associated Registers 247
Control Register 246
During Oscillator Failure 249
Programming Considerations 246
WCOL 183
WCOL Status Flag 183, 185, 188
WWW Address 389
WWW, On-Line Support 5

X

XORLW 298
XORWF 299

NOTES:

© 2007 Microchip Technology Inc.

THE MICROCHIP WEB SITE

Microchip provides online support via our WWW site at www.microchip.com. This web site is used as a means to make files and information easily available to customers. Accessible by using your favorite Internet browser, the web site contains the following information:

- **Product Support** – Data sheets and errata, application notes and sample programs, design resources, user's guides and hardware support documents, latest software releases and archived software
- **General Technical Support** – Frequently Asked Questions (FAQ), technical support requests, online discussion groups, Microchip consultant program member listing
- **Business of Microchip** – Product selector and ordering guides, latest Microchip press releases, listing of seminars and events, listings of Microchip sales offices, distributors and factory representatives

CUSTOMER CHANGE NOTIFICATION SERVICE

Microchip's customer notification service helps keep customers current on Microchip products. Subscribers will receive e-mail notification whenever there are changes, updates, revisions or errata related to a specified product family or development tool of interest.

To register, access the Microchip web site at www.microchip.com, click on Customer Change Notification and follow the registration instructions.

CUSTOMER SUPPORT

Users of Microchip products can receive assistance through several channels:

- Distributor or Representative
- Local Sales Office
- Field Application Engineer (FAE)
- Technical Support
- Development Systems Information Line

Customers should contact their distributor, representative or field application engineer (FAE) for support. Local sales offices are also available to help customers. A listing of sales offices and locations is included in the back of this document.

Technical support is available through the web site at: http://support.microchip.com

READER RESPONSE

It is our intention to provide you with the best documentation possible to ensure successful use of your Microchip product. If you wish to provide your comments on organization, clarity, subject matter, and ways in which our documentation can better serve you, please FAX your comments to the Technical Publications Manager at (480) 792-4150.

Please list the following information, and use this outline to provide us with your comments about this document.

To: Technical Publications Manager Total Pages Sent _____

RE: Reader Response

From: Name _____

Company _____

Address _____

City / State / ZIP / Country _____

Telephone: (_____) _____ - _____ FAX: (_____) _____ - _____

Application (optional):

Would you like a reply? ___Y ___N

Device: PIC18F2220/2320/4220/4320 Literature Number: DS39599G

Questions:

1. What are the best features of this document?

2. How does this document meet your hardware and software development needs?

3. Do you find the organization of this document easy to follow? If not, why?

4. What additions to the document do you think would enhance the structure and subject?

5. What deletions from the document could be made without affecting the overall usefulness?

6. Is there any incorrect or misleading information (what and where)?

7. How would you improve this document?

© 2007 Microchip Technology Inc.

PIC18F2220/2320/4220/4320 PRODUCT IDENTIFICATION SYSTEM

To order or obtain information, e.g., on pricing or delivery, refer to the factory or the listed sales office.

PART NO.	–	X	/XX	XXX
Device		Temperature Range	Package	Pattern

Device	PIC18F2220/2320/4220/4320(1), PIC18F2220/2320/4220/4320T(1,2); VDD range 4.2V to 5.5V PIC18LF2220/2320/4220/4320(1), PIC18LF2220/2320/4220/4320T(1,2); VDD range 2.0V to 5.5V
Temperature Range	I = -40°C to +85°C (Industrial)
Package	PT = TQFP (Thin Quad Flatpack) SO = SOIC SP = Skinny Plastic DIP P = PDIP ML = QFN
Pattern	QTP, SQTP, Code or Special Requirements (blank otherwise)

Examples:

a) PIC18LF4320-I/P 301 = Industrial temp., PDIP package, Extended VDD limits, QTP pattern #301.

b) PIC18LF2220-I/SO = Industrial temp., SOIC package, Extended VDD limits.

c) PIC18F4220-I/P = Industrial temp., PDIP package, normal VDD limits.

Note 1: F = Standard Voltage Range
LF = Wide Voltage Range

2: T = in tape and reel – SOIC and TQFP packages only.

WORLDWIDE SALES AND SERVICE

AMERICAS

Corporate Office
2355 West Chandler Blvd.
Chandler, AZ 85224-6199
Tel: 480-792-7200
Fax: 480-792-7277
Technical Support:
http://support.microchip.com
Web Address:
www.microchip.com

Atlanta
Duluth, GA
Tel: 678-957-9614
Fax: 678-957-1455

Boston
Westborough, MA
Tel: 774-760-0087
Fax: 774-760-0088

Chicago
Itasca, IL
Tel: 630-285-0071
Fax: 630-285-0075

Dallas
Addison, TX
Tel: 972-818-7423
Fax: 972-818-2924

Detroit
Farmington Hills, MI
Tel: 248-538-2250
Fax: 248-538-2260

Kokomo
Kokomo, IN
Tel: 765-864-8360
Fax: 765-864-8387

Los Angeles
Mission Viejo, CA
Tel: 949-462-9523
Fax: 949-462-9608

Santa Clara
Santa Clara, CA
Tel: 408-961-6444
Fax: 408-961-6445

Toronto
Mississauga, Ontario,
Canada
Tel: 905-673-0699
Fax: 905-673-6509

ASIA/PACIFIC

Asia Pacific Office
Suites 3707-14, 37th Floor
Tower 6, The Gateway
Harbour City, Kowloon
Hong Kong
Tel: 852-2401-1200
Fax: 852-2401-3431

Australia - Sydney
Tel: 61-2-9868-6733
Fax: 61-2-9868-6755

China - Beijing
Tel: 86-10-8528-2100
Fax: 86-10-8528-2104

China - Chengdu
Tel: 86-28-8665-5511
Fax: 86-28-8665-7889

China - Fuzhou
Tel: 86-591-8750-3506
Fax: 86-591-8750-3521

China - Hong Kong SAR
Tel: 852-2401-1200
Fax: 852-2401-3431

China - Nanjing
Tel: 86-25-8473-2460
Fax: 86-25-8473-2470

China - Qingdao
Tel: 86-532-8502-7355
Fax: 86-532-8502-7205

China - Shanghai
Tel: 86-21-5407-5533
Fax: 86-21-5407-5066

China - Shenyang
Tel: 86-24-2334-2829
Fax: 86-24-2334-2393

China - Shenzhen
Tel: 86-755-8203-2660
Fax: 86-755-8203-1760

China - Shunde
Tel: 86-757-2839-5507
Fax: 86-757-2839-5571

China - Wuhan
Tel: 86-27-5980-5300
Fax: 86-27-5980-5118

China - Xian
Tel: 86-29-8833-7252
Fax: 86-29-8833-7256

ASIA/PACIFIC

India - Bangalore
Tel: 91-80-4182-8400
Fax: 91-80-4182-8422

India - New Delhi
Tel: 91-11-4160-8631
Fax: 91-11-4160-8632

India - Pune
Tel: 91-20-2566-1512
Fax: 91-20-2566-1513

Japan - Yokohama
Tel: 81-45-471- 6166
Fax: 81-45-471-6122

Korea - Daegu
Tel: 82-53-744-4301
Fax: 82-53-744-4302

Korea - Seoul
Tel: 82-2-554-7200
Fax: 82-2-558-5932 or
82-2-558-5934

Malaysia - Kuala Lumpur
Tel: 60-3-6201-9857
Fax: 60-3-6201-9859

Malaysia - Penang
Tel: 60-4-227-8870
Fax: 60-4-227-4068

Philippines - Manila
Tel: 63-2-634-9065
Fax: 63-2-634-9069

Singapore
Tel: 65-6334-8870
Fax: 65-6334-8850

Taiwan - Hsin Chu
Tel: 886-3-572-9526
Fax: 886-3-572-6459

Taiwan - Kaohsiung
Tel: 886-7-536-4818
Fax: 886-7-536-4803

Taiwan - Taipei
Tel: 886-2-2500-6610
Fax: 886-2-2508-0102

Thailand - Bangkok
Tel: 66-2-694-1351
Fax: 66-2-694-1350

EUROPE

Austria - Wels
Tel: 43-7242-2244-39
Fax: 43-7242-2244-393

Denmark - Copenhagen
Tel: 45-4450-2828
Fax: 45-4485-2829

France - Paris
Tel: 33-1-69-53-63-20
Fax: 33-1-69-30-90-79

Germany - Munich
Tel: 49-89-627-144-0
Fax: 49-89-627-144-44

Italy - Milan
Tel: 39-0331-742611
Fax: 39-0331-466781

Netherlands - Drunen
Tel: 31-416-690399
Fax: 31-416-690340

Spain - Madrid
Tel: 34-91-708-08-90
Fax: 34-91-708-08-91

UK - Wokingham
Tel: 44-118-921-5869
Fax: 44-118-921-5820

10/05/07

© 2007 Microchip Technology Inc.

Looking for pricing, stock, or lifecycle information?

Click below to explore more details on WIN SOURCE:

- View PIC18F4320T-I/PT on WIN SOURCE
- Microchip Technology Information

Optimize Your Supply Chain with WIN SOURCE Solutions

- Global Sourcing Solution
- Obsolete Management
- Cost Control Management
- Shortage Management
- Alternative Solution
- Excess Inventory Management