THE DATASHEET OF

LT1580IR-2.5#PBF

www.win-source.net 0086-755-83957316

7A, Very Low Dropout Regulator

FEATURES

- **Low Dropout, 540mV at 7A Output Current**
- **Fast Transient Response**
- **Remote Sense**
- 1mV Load Regulation
- Fixed 2.5V Output and Adjustable Output
- No Supply Sequencing Problems in Dual Supply Mode

APPLICATIONS

- Microprocessor Supplies
- Post Regulators for Switching Supplies
- High Current Regulators
- 5V to 3.XXV for Pentium® Processors Operating at 90MHz to 166MHz and Beyond
- 3.3V to 2.9V for Portable Pentium Processor
- PowerPC™ Series Power Supplies

DESCRIPTION

The LT®1580 is a 7A low dropout regulator designed to power the new generation of microprocessors. The dropout voltage of this device is 100mV at light loads rising to just 540mV at 7A. To achieve this dropout, a second low current input voltage 1V greater than the output voltage, is required. The device can also be used as a single supply device where dropout is comparable to an LT1584.

Several other new features have been added to the LT1580. A remote SENSE pin is brought out. This feature virtually eliminates output voltage variations due to load changes. Typical load regulation, measured at the SENSE pin, for a load current step of 100mA to 7A is less than 1mV.

The LT1580 has fast transient response, equal to the LT1584. On fixed voltage devices, the ADJ pin is brought out. A small capacitor on the ADJ pin further improves transient response.

This device is ideal for generating processor supplies of 2V to 3V on motherboards where both 5V and 3.3V supplies are available.

LT, LTC and LT are registered trademarks of Linear Technology Corporation.
Pentium is a registered trademark of Intel Corporation.
PowerPC is a trademark of IBM Corporation.

TYPICAL APPLICATION

2.5V Microprocessor Supply

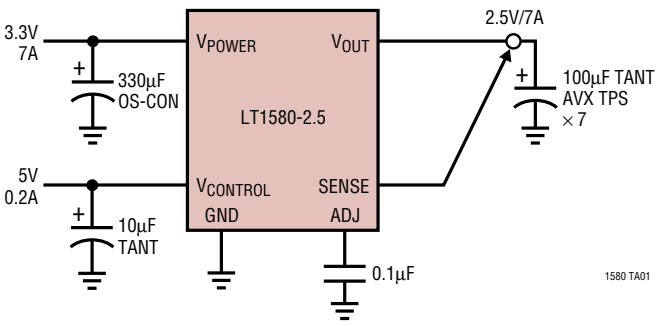

Dropout Voltage—Minimum Power Voltage

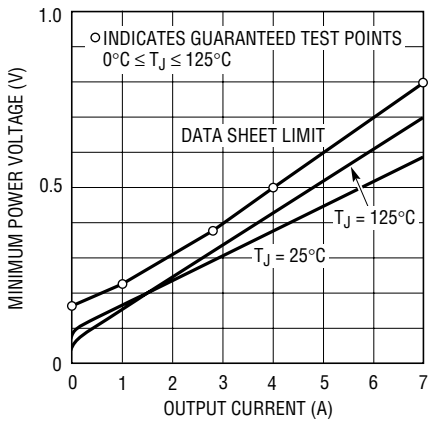

ABSOLUTE MAXIMUM RATINGS

V_{POWER} Input Voltage 6V
$V_{CONTROL}$ Input Voltage 13V
Storage Temperature ..... –65°C to 150°C
Operating Junction Temperature Range
Control Section
LT1580C ..... 0°C to 125°C
LT1580I ..... –40°C to 125°C
Power Transistor
LT1580C ..... 0°C to 150°C
LT1580I ..... –40°C to 150°C
Lead Temperature (Soldering, 10 sec) ..... 300°C

PRECONDITIONING

100% Thermal Limit Functional Test

PACKAGE/ORDER INFORMATION

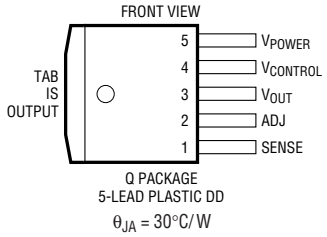

Q PACKAGE
5-LEAD PLASTIC DD
θ_{JA} = 30°C/W

ORDER PART NUMBER

LT1580CQ
LT1580IQ

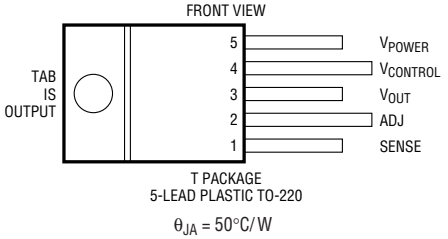

T PACKAGE
5-LEAD PLASTIC TO-220
θ_{JA} = 50°C/W

ORDER PART NUMBER

LT1580CT
LT1580IT

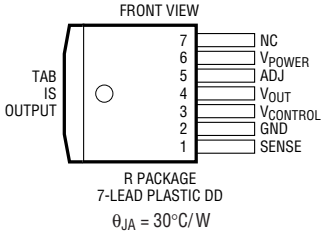

R PACKAGE
7-LEAD PLASTIC DD
θ_{JA} = 30°C/W

ORDER PART NUMBER

LT1580CR-2.5
LT1580IR-2.5

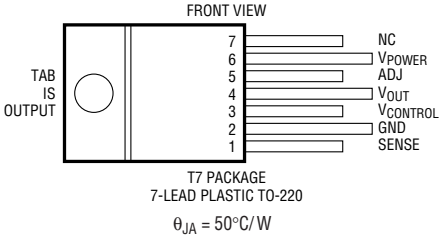

T7 PACKAGE
7-LEAD PLASTIC TO-220
θ_{JA} = 50°C/W

ORDER PART NUMBER

LT1580CT7-2.5
LT1580IT7-2.5

Consult factory for Military grade parts.

ELECTRICAL CHARACTERISTICS (Note 1)

PARAMETER	CONDITIONS		MIN	TYP	MAX	UNITS
Output Voltage: LT1580-2.5	$V_{CONTROL}$ = 5V, V_{POWER} = 3.3V, I_{LOAD} = 0mA		2.485	2.500	2.515	V
	$V_{CONTROL}$ = 4V to 12V, V_{POWER} = 3V to 5.5V, I_{LOAD} = 0mA to 4A	●	2.475	2.500	2.525	V
	$V_{CONTROL}$ = 4V to 12V, V_{POWER} = 3V to 5.5V, I_{LOAD} = 0mA to 7A, 0°C ≤ T_J ≤ 125°C		2.475	2.500	2.525	V
	$V_{CONTROL}$ = 4V to 12V, V_{POWER} = 3V to 5.5V, I_{LOAD} = 0mA to 6.5A, –40°C ≤ T_J < 0°C		2.460	2.500	2.525	V
Reference Voltage: LT1580 (V_{ADJ} = 0V)	$V_{CONTROL}$ = 2.75V, V_{POWER} = 2V, I_{LOAD} = 10mA		1.243	1.250	1.257	V
	$V_{CONTROL}$ = 2.7V to 12V, V_{POWER} = 1.75V to 5.5V, I_{LOAD} = 10mA to 4A	●	1.237	1.250	1.263	V
	$V_{CONTROL}$ = 2.7V to 12V, V_{POWER} = 2.05V to 5.5V, I_{LOAD} = 10mA to 7A, 0°C ≤ T_J ≤ 125°C		1.237	1.250	1.263	V
	$V_{CONTROL}$ = 2.7V to 12V, V_{POWER} = 2.05V to 5.5V, I_{LOAD} = 10mA to 6.5A, –40°C ≤ T_J < 0°C		1.232	1.250	1.263	V
Line Regulation: LT1580-2.5	$V_{CONTROL}$ = 3.65V to 12V, V_{POWER} = 3V to 5.5V, I_{LOAD} = 10mA	●		1	3	mV
LT1580	$V_{CONTROL}$ = 2.5V to 12V, V_{POWER} = 1.75V to 5.5V, I_{LOAD} = 10mA	●		1	3	mV

ELECTRICAL CHARACTERISTICS

PARAMETER	CONDITIONS		MIN	TYP	MAX	UNITS
Load Regulation: LT1580-2.5	$V_{CONTROL}$ = 5V, V_{POWER} = 3.3V, I_{LOAD} = 0mA to 7A	●		1	5	mV
LT1580 (V_{ADJ} = 0V)	$V_{CONTROL}$ = 2.75V, V_{POWER} = 2.1V, I_{LOAD} = 10mA to 7A	●		1	5	mV
Minimum Load Current: LT1580	$V_{CONTROL}$ = 5V, V_{POWER} = 3.3V, V_{ADJ} = 0V (Note 3)	●		5	10	mA
Control Pin Current: LT1580-2.5 (Note 4)	$V_{CONTROL}$ = 5V, V_{POWER} = 3.3V, I_{LOAD} = 100mA, 0°C ≤ T_J ≤ 125°C			6	10	mA
	$V_{CONTROL}$ = 5V, V_{POWER} = 3.3V, I_{LOAD} = 100mA, –40°C ≤ T_J < 0°C				12	mA
	$V_{CONTROL}$ = 5V, V_{POWER} = 3.3V, I_{LOAD} = 4A, 0°C ≤ T_J ≤ 125°C			30	60	mA
	$V_{CONTROL}$ = 5V, V_{POWER} = 3.3V, I_{LOAD} = 4A, –40°C ≤ T_J < 0°C				70	mA
	$V_{CONTROL}$ = 5V, V_{POWER} = 3V, I_{LOAD} = 4A, 0°C ≤ T_J ≤ 125°C			33	70	mA
	$V_{CONTROL}$ = 5V, V_{POWER} = 3V, I_{LOAD} = 4A, –40°C ≤ T_J < 0°C				80	mA
	$V_{CONTROL}$ = 5V, V_{POWER} = 3.3V, I_{LOAD} = 7A, 0°C ≤ T_J ≤ 125°C			60	120	mA
	$V_{CONTROL}$ = 5V, V_{POWER} = 3.3V, I_{LOAD} = 6.5A, –40°C ≤ T_J < 0°C				130	mA
Control Pin Current: LT1580 (Note 4)	$V_{CONTROL}$ = 2.75V, V_{POWER} = 2.05V, I_{LOAD} = 100mA, 0°C ≤ T_J ≤ 125°C			6	10	mA
	$V_{CONTROL}$ = 2.75V, V_{POWER} = 2.05V, I_{LOAD} = 100mA, –40°C ≤ T_J < 0°C				12	mA
	$V_{CONTROL}$ = 2.75V, V_{POWER} = 2.05V, I_{LOAD} = 4A, 0°C ≤ T_J ≤ 125°C			30	60	mA
	$V_{CONTROL}$ = 2.75V, V_{POWER} = 2.05V, I_{LOAD} = 4A, –40°C ≤ T_J < 0°C				70	mA
	$V_{CONTROL}$ = 2.75V, V_{POWER} = 1.75V, I_{LOAD} = 4A, 0°C ≤ T_J ≤ 125°C			33	70	mA
	$V_{CONTROL}$ = 2.75V, V_{POWER} = 1.75V, I_{LOAD} = 4A, –40°C ≤ T_J < 0°C				80	mA
	$V_{CONTROL}$ = 2.75V, V_{POWER} = 2.05V, I_{LOAD} = 7A, 0°C ≤ T_J ≤ 125°C			60	120	mA
	$V_{CONTROL}$ = 2.75V, V_{POWER} = 2.05V, I_{LOAD} = 6.5A, –40°C ≤ T_J < 0°C				130	mA
Ground Pin Current: LT1580-2.5	$V_{CONTROL}$ = 5V, V_{POWER} = 3.3V, I_{LOAD} = 0mA	●		6	10	mA
ADJ Pin Current: LT1580 (V_{ADJ} = 0V)	$V_{CONTROL}$ = 2.75V, V_{POWER} = 2.05V, I_{LOAD} = 10mA	●		50	120	µA
Current Limit: LT1580-2.5	$V_{CONTROL}$ = 5V, V_{POWER} = 3.3V, ΔV_{OUT} = 100mV, 0°C ≤ T_J ≤ 125°C		7.1	8		A
	$V_{CONTROL}$ = 5V, V_{POWER} = 3.3V, ΔV_{OUT} = 100mV, –40°C ≤ T_J < 0°C		6.6			A
LT1580 (V_{ADJ} = 0V)	$V_{CONTROL}$ = 2.75V, V_{POWER} = 2.05V, ΔV_{OUT} = 100mV, 0°C ≤ T_J ≤ 125°C		7.1	8		A
	$V_{CONTROL}$ = 2.75V, V_{POWER} = 2.05V, ΔV_{OUT} = 100mV, –40°C ≤ T_J < 0°C		6.6			A
Ripple Rejection: LT1580-2.5	V_C = V_P = 5V Avg, V_{RIPPLE} = 1V_{P-P}, I_{OUT} = 4A, T_J = 25°C		60	80		dB
LT1580	V_C = V_P = 3.75V Avg, V_{RIPPLE} = 1V_{P-P}, V_{ADJ} = 0V, I_{OUT} = 4A, T_J = 25°C		60	80		dB
Thermal Regulation	30ms Pulse			0.002	0.020	%/W
Thermal Resistance, Junction-to-Case	T, T7 Packages, Control Circuitry/Power Transistor			0.65/2.70		°C/W
Dropout Voltage (Note 2)						
Minimum $V_{CONTROL}$: LT1580-2.5 ($V_{CONTROL}$ – V_{OUT})	V_{POWER} = 3.3V, I_{LOAD} = 100mA, 0°C ≤ T_J ≤ 125°C			1.00	1.15	V
	V_{POWER} = 3.3V, I_{LOAD} = 100mA, –40°C ≤ T_J < 0°C				1.20	V
	V_{POWER} = 3.3V, I_{LOAD} = 1A, 0°C ≤ T_J ≤ 125°C			1.00	1.15	V
	V_{POWER} = 3.3V, I_{LOAD} = 1A, –40°C ≤ T_J < 0°C				1.20	V
	V_{POWER} = 3.3V, I_{LOAD} = 4A, 0°C ≤ T_J ≤ 125°C			1.06	1.20	V
	V_{POWER} = 3.3V, I_{LOAD} = 4A, –40°C ≤ T_J < 0°C				1.25	V
	V_{POWER} = 3.3V, I_{LOAD} = 7A, 0°C ≤ T_J ≤ 125°C			1.15	1.30	V
	V_{POWER} = 3.3V, I_{LOAD} = 6.5A, –40°C ≤ T_J < 0°C				1.35	V
Minimum $V_{CONTROL}$: LT1580 ($V_{CONTROL}$ – V_{OUT}) (V_{ADJ} = 0V)	V_{POWER} = 2.05V, I_{LOAD} = 100mA, 0°C ≤ T_J ≤ 125°C			1.00	1.15	V
	V_{POWER} = 2.05V, I_{LOAD} = 100mA, –40°C ≤ T_J < 0°C				1.20	V
	V_{POWER} = 2.05V, I_{LOAD} = 1A, 0°C ≤ T_J ≤ 125°C			1.00	1.15	V
	V_{POWER} = 2.05V, I_{LOAD} = 1A, –40°C ≤ T_J < 0°C				1.20	V
	V_{POWER} = 2.05V, I_{LOAD} = 2.75A, 0°C ≤ T_J ≤ 125°C			1.05	1.18	V
	V_{POWER} = 2.05V, I_{LOAD} = 2.75A, –40°C ≤ T_J < 0°C				1.23	V
	V_{POWER} = 2.05V, I_{LOAD} = 4A, 0°C ≤ T_J ≤ 125°C			1.06	1.20	V
	V_{POWER} = 2.05V, I_{LOAD} = 4A, –40°C ≤ T_J < 0°C				1.25	V
	V_{POWER} = 2.05V, I_{LOAD} = 7A, 0°C ≤ T_J ≤ 125°C			1.15	1.30	V
	V_{POWER} = 2.05V, I_{LOAD} = 6.5A, –40°C ≤ T_J < 0°C				1.35	V

ELECTRICAL CHARACTERISTICS

PARAMETER	CONDITIONS		MIN	TYP	MAX	UNITS
Minimum V_{POWER}: LT1580-2.5 ($V_{POWER} - V_{OUT}$)	$V_{CONTROL}$ = 5V, I_{LOAD} = 100mA	●		0.10	0.17	V
	$V_{CONTROL}$ = 5V, I_{LOAD} = 1A	●		0.15	0.22	V
	$V_{CONTROL}$ = 5V, I_{LOAD} = 4A, T_J = 25°C			0.34	0.40	V
	$V_{CONTROL}$ = 5V, I_{LOAD} = 4A	●			0.50	V
	$V_{CONTROL}$ = 5V, I_{LOAD} = 7A, T_J = 25°C			0.54	0.62	V
	$V_{CONTROL}$ = 5V, I_{LOAD} = 7A, 0°C ≤ T_J ≤ 125°C			0.70	0.80	V
	$V_{CONTROL}$ = 5V, I_{LOAD} = 6.5A, –40°C ≤ T_J ≤ 0°C			0.70	0.80	V
Minimum V_{POWER}: LT1580 ($V_{POWER} - V_{OUT}$) (V_{ADJ} = 0V)	$V_{CONTROL}$ = 2.75V, I_{LOAD} = 100mA	●		0.10	0.17	V
	$V_{CONTROL}$ = 2.75V, I_{LOAD} = 1A	●		0.15	0.22	V
	$V_{CONTROL}$ = 2.75V, I_{LOAD} 2.75A	●		0.26	0.38	V
	$V_{CONTROL}$ = 2.75V, I_{LOAD} = 4A, T_J = 25°C			0.34	0.40	V
	$V_{CONTROL}$ = 2.75V, I_{LOAD} = 4A	●			0.50	V
	$V_{CONTROL}$ = 2.75V, I_{LOAD} = 7A, T_J = 25°C			0.54	0.62	V
	$V_{CONTROL}$ = 2.75V, I_{LOAD} = 7A, 0°C ≤ T_J ≤ 125°C			0.70	0.80	V
	$V_{CONTROL}$ = 2.75V, I_{LOAD} = 6.5A, –40°C ≤ T_J ≤ 0°C			0.70	0.80	V

The ● denotes specifications which apply over the full operating temperature range.

Note 1: Unless otherwise specified $V_{OUT} = V_{SENSE}$. For the LT1580 adjustable device V_{ADJ} = 0V.

Note 2: For the LT1580, dropout is caused by either minimum control voltage ($V_{CONTROL}$) or minimum power voltage (V_{POWER}). Both parameters are specified with respect to the output voltage. The specifications represent the minimum input/output voltage required to maintain 1% regulation.

Note 3: For the LT1580 adjustable device the minimum load current is the minimum current required to maintain regulation. Normally the current in the resistor divider used to set the output voltage is selected to meet the minimum load current requirement.

Note 4: The control pin current is the drive current required for the output transistor. This current will track output current with roughly a 1:100 ratio. The minimum value is equal to the quiescent current of the device.

TYPICAL PERFORMANCE CHARACTERISTICS

Control Pin Current vs Output Current

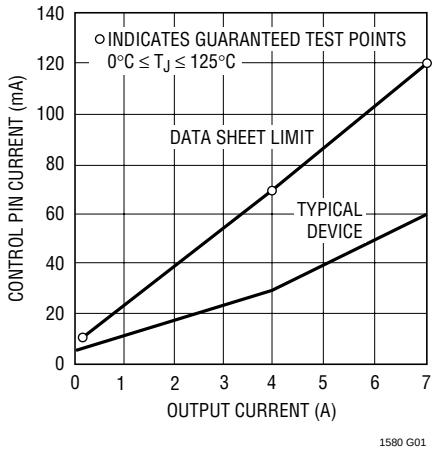

Minimum Control Voltage

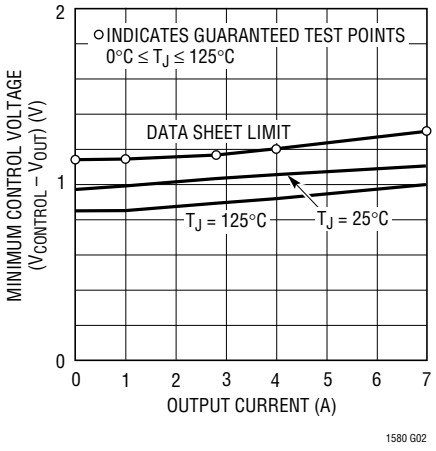

Dropout Voltage— Minimum Power Voltage

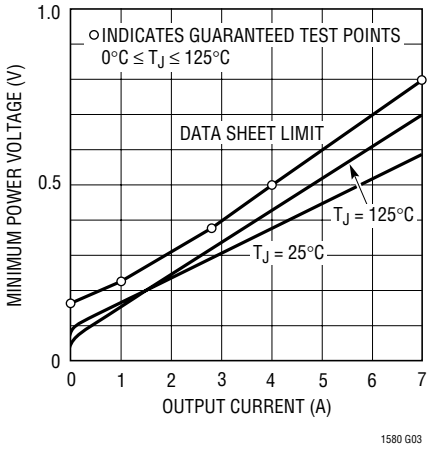

TYPICAL PERFORMANCE CHARACTERISTICS

LT1580 Reference Voltage vs Temperature

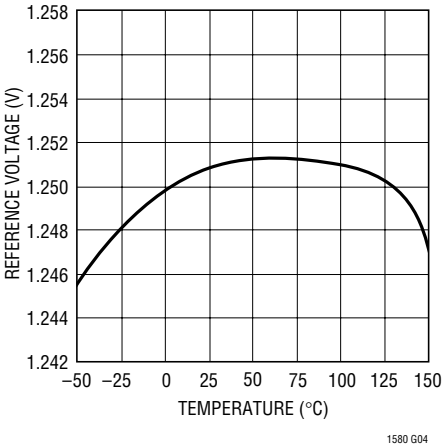

LT1580-2.5 Output Voltage vs Temperature

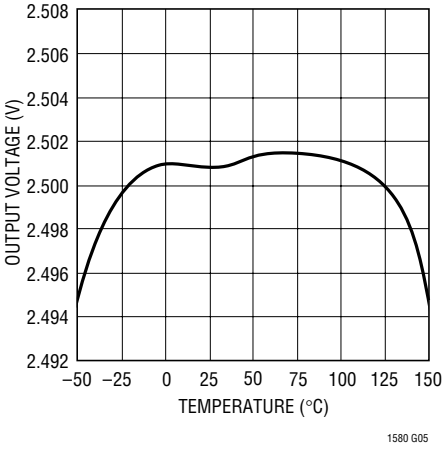

Load Current Step Response

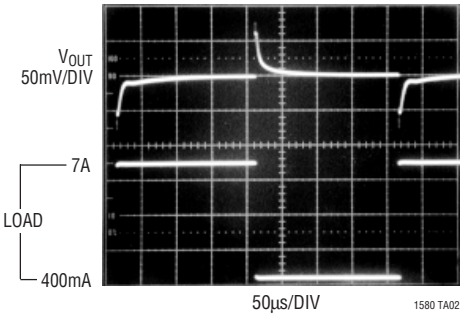

PIN FUNCTIONS (5-Lead/7-Lead)

SENSE (Pin 1): This pin is the positive side of the reference voltage for the device. With this pin it is possible to Kelvin sense the output voltage at the load.

ADJ (Pin 2/5): This pin is the negative side of the reference voltage for the device. Transient response can be improved by adding a small bypass capacitor from the ADJ pin to ground. For fixed voltage devices the ADJ pin is also brought out to allow the user to add a bypass capacitor.

GND (Pin 2, 7-Lead Only): For fixed voltage devices this is the bottom of the resistor divider that sets the output voltage.

V_{POWER} (Pin 5/6): This is the collector to the power device of the LT1580. The output load current is supplied through this pin. For the device to regulate, the voltage at this pin must be between 0.1V and 0.8V greater than the output voltage (see Dropout specifications).

$V_{CONTROL}$ (Pin 4/3): This pin is the supply pin for the control circuitry of the device. The current flow into this pin will be about 1% of the output current. For the device to regulate, the voltage at this pin must be between 1.0V and 1.3V greater than the output voltage (see Dropout specifications).

V_{OUT} (Pin 3/4): This is the power output of the device.

BLOCK DIAGRAM

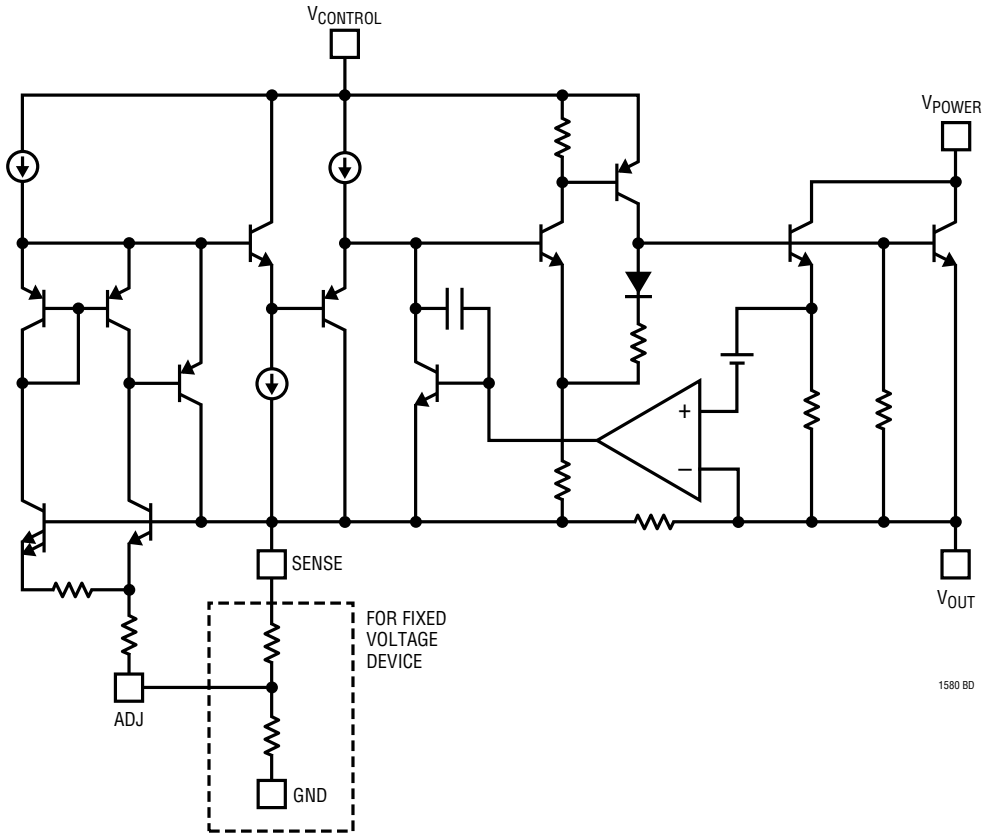

APPLICATIONS INFORMATION

The LT1580 is a low dropout regulator designed to power the new generation of microprocessors. Low dropout regulators have become more common in desktop computer systems as microprocessor manufacturers have moved away from 5V only CPUs. A wide range of supply requirements exists today with new voltages just over the horizon. In many cases the input-output differential is very small, effectively disqualifying many of the low dropout regulators on the market today. The LT1580 is designed to make use of multiple power supplies, present in most systems, to reduce the dropout voltage. This two supply approach maximizes efficiency.

The second supply, at least 1V greater than the output voltage, is used to provide power for the control circuitry and supply the drive current to the NPN output transistor. This allows the NPN to be driven into saturation, thereby reducing the dropout voltage by a V_{BE} compared to conventional designs. The current requirement for the control voltage is relatively small, equal to approximately 1% of the output current or about 70mA for a 7A load. The bulk of this current is drive current for the NPN output transistor. This drive current becomes part of the output current.

The control voltage must be at least 1V greater than the output voltage to obtain optimum performance. The maximum voltage on the $V_{CONTROL}$ pin is 13V. The maximum voltage at the V_{POWER} pin is limited to 7V. GDN pin current for fixed voltage devices is 6mA (typ) and is constant as a function of load. ADJ pin current for adjustable devices is 60µA at 25°C and varies proportional to absolute temperature.

APPLICATIONS INFORMATION

The LT1580 has improved frequency compensation which permits the use of capacitors with very low ESR. This is critical in addressing the needs of modern, low voltage, high speed microprocessors. Current generation microprocessors cycle load current from several hundred milliamperes to several amperes in tens of nanoseconds. Output voltage tolerances are tighter and include transient response as part of the specification. The LT1580 is designed to meet the fast current load step requirements of these microprocessors and saves total cost by needing less output capacitance to maintain regulation.

Careful design has eliminated any supply sequencing issues associated with a dual supply system. The output voltage will not turn on until both supplies are operating. If the control voltage comes up first, the output current will be limited to a few milliamperes until the power input voltage comes up. If the power input comes up first the output will not turn on at all until the control voltage comes up. The output can never come up unregulated. The LT1580 can also be operated as a single supply device by tying the control and power inputs together. Dropout in single supply operation will be determined by the minimum control voltage.

The LT1580 includes several innovative features that require additional pins over the traditional 3-terminal regulator. Both the fixed and adjustable devices have remote SENSE pins, permitting very accurate regulation of output voltage at the load, where it counts, rather than at the regulator. As a result the typical load regulation over an output current range of 100mA to 7A with a 2.5V output is typically less than 1mV. For the fixed voltage devices the ADJ pin is also brought out. This allows the user to improve transient response by bypassing the internal resistor divider. In the past fixed output voltage devices did not provide this capability. Bypassing the ADJ pin with a capacitor in the range of 0.1µF to 1µF will provide optimum transient response. The value chosen will depend on the amount of output capacitance in the system.

In addition to the enhancements mentioned above the reference accuracy has been improved by a factor of two with a guaranteed initial tolerance of ±0.6% at 25°C. Temperature drift is also very well controlled. When combined with ratiometrically accurate internal divider resistors the part can easily hold 1% output accuracy over the full temperature range and load current range, guaranteed, while operating with an input/output differential of well under 1V.

Typical applications for the LT1580 include 3.3V to 2.5V conversion with a 5V control supply, 5V to 4.2V conversion with a 12V control supply or 5V to 3.6V conversion with a 12V control supply. It is easy to obtain dropout voltages of less than 0.5V at 4A along with excellent static and dynamic specifications. The LT1580 is capable of 7A of output current with a maximum dropout of 0.8V. The LT1580 has fast transient response that allows it to handle the large current changes associated with today's microprocessors. The device is fully protected against overcurrent and overtemperature conditions. Both fixed voltage (2.5V) and adjustable output versions are available. The device is available in a multilead TO-220 package with five leads for the adjustable device and seven leads for the fixed voltage device.

Grounding and Output Sensing

The LT1580 allows true Kelvin sensing for both the high and low side of the load. This means that the voltage regulation at the load can be easily optimized. Voltage drops due to parasitic resistances between the regulator and the load which would normally degrade regulation can be placed inside the regulation loop of the LT1580. Figures 1 through 3 illustrate the advantages of remote sensing. Figure 1 shows the LT1580 connected as a conventional 3-terminal regulator with the SENSE lead connected directly to the output of the device. R_P represents the parasitic resistance of the connections between the LT1580 and the load. The load is typically a microprocessor and R_P is made up of the PC traces and/or connector resistances, in the case of a modular regulator, between the regulator and the processor. The effect of R_P can be seen in trace A of Figure 3. Very small resistances cause significant load regulation steps. For example, at 7A output current the output voltage will shift by 7mV for every 0.001Ω of resistance. In Figure 2 the LT1580 is connected to take advantage of the remote sense feature. The SENSE

APPLICATIONS INFORMATION

pin and the top of the resistor divider are connected to the top of the load. The bottom of the resistor divider is connected to the bottom of the load. R_P is now effectively connected inside the regulating loop of the LT1580 and the load regulation at the load will be negligible for reasonable values of R_P. Trace B of Figure 3 illustrates the effect on output regulation. It is important to note that the voltage drops due to R_P are not eliminated. They will add to the dropout voltage of the regulator regardless of whether they are inside the loop as in Figure 2 or outside the loop as in Figure 1. This means that the LT1580 can control the voltage at the load as long as the input-output voltage is greater than the total of the dropout voltage of the LT1580 plus the voltage drop across R_P.

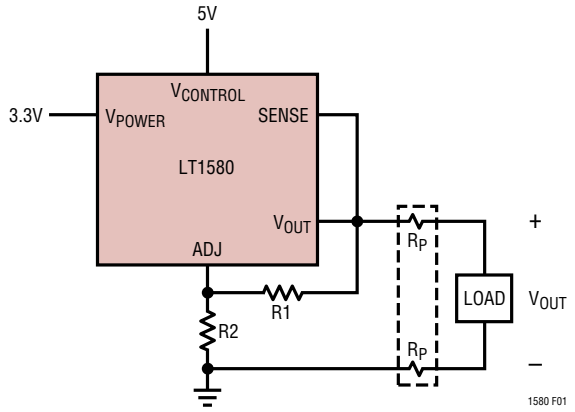

Figure 1. Conventional Load Sensing

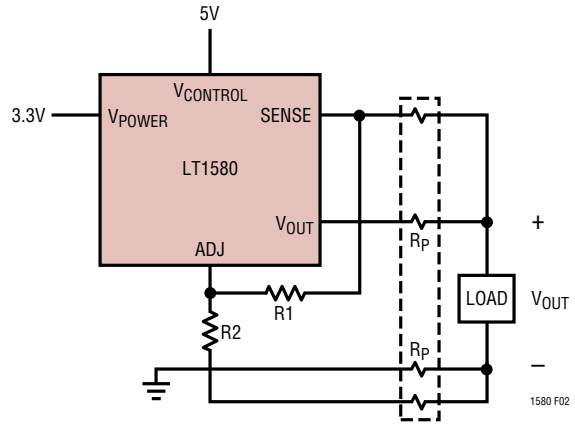

Figure 2. Remote Load Sensing

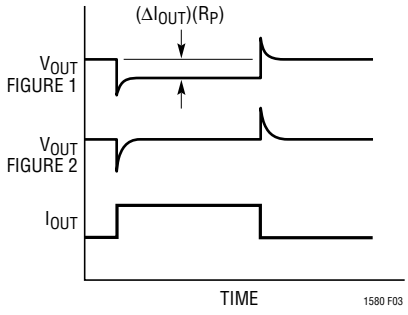

Figure 3. Remote Sensing Improves Load Regulation

Stability

The LT1580 requires the use of an output capacitor as part of the device frequency compensation. The device requires a minimum of 22µF tantalum or 150µF of aluminum electrolytic to ensure stability. Larger capacitor values increase stability and improve transient performance.

Many different types of capacitors are available and have widely varying characteristics. These capacitors differ in capacitor tolerance (sometimes up to ±100%), equivalent series resistance, equivalent series inductance and capacitance temperature coefficient. The LT1580 frequency compensation optimizes frequency response with low ESR capacitors. In general, use capacitors with an ESR of less than 1Ω.

For microprocessor applications larger value capacitors will be needed to meet the transient requirements of the processor. Processor manufacturers require tight voltage tolerances on the power supply. High quality bypass capacitors must be used to limit the high frequency noise generated by the processor. Multiple small ceramic capacitors in addition to high quality bulk tantalum capacitors are typically required to limit parasitic inductance (ESL) and resistance (ESR) in the capacitors to acceptable levels. The LT1580 is stable with the type of capacitors recommended by processor manufacturers.

Bypassing the adjust terminal on the LT1580 improves ripple rejection and transient response. The ADJ pin is brought out on the fixed voltage device specifically to allow this capability.

Capacitor values on the order of several hundred microfarads are used to ensure good transient response with heavy

APPLICATIONS INFORMATION

load current changes. Output capacitance can increase without limit and larger values of output capacitance further improve the stability and transient response of the LT1580.

Modern microprocessors generate large high frequency current transients. The load current step contains higher order frequency components that the output coupling network must handle until the regulator throttles to the load current level. Capacitors are not ideal elements and contain parasitic resistance and inductance. These parasitic elements dominate the change in output voltage at the beginning of a transient load step change. The ESR of the output capacitors produces an instantaneous step in output voltage ($\Delta V = \Delta I)(ESR)$. The ESL of the output capacitors produces a droop proportional to the rate of change of the output current ($V = L)(\Delta I/\Delta t)$. The output capacitance produces a change in output voltage proportional to the time until the regulator can respond ($\Delta V = \Delta t)(\Delta I/ C)$. These transient effects are illustrated in Figure 4 .

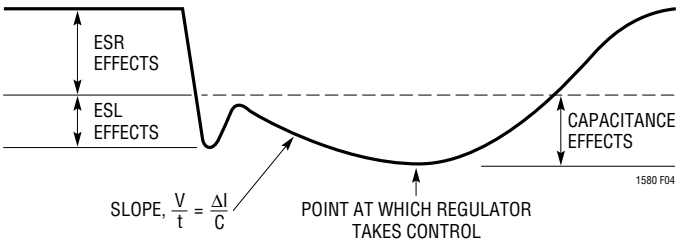

Figure 4

The use of capacitors with low ESR, low ESL and good high frequency characteristics is critical in meeting the output voltage tolerances of these high speed microprocessors. These requirements dictate a combination of high quality, surface mount, tantalum and ceramic capacitors. The location of the decoupling network is critical to transient performance. Place the decoupling network as close to the processor pins as possible because trace runs from the decoupling capacitors to the processor pins are inductive. The ideal location for the decoupling network is actually inside the microprocessor socket cavity. In addition, use large power and ground plane areas to minimize distribution drops.

Output Voltage

The adjustable version of the LT1580 develops a 1.25V reference voltage between the SENSE pin and the ADJ pin (see Figure 5). Placing a resistor R1 between these two terminals causes a constant current to flow through R1 and down through R2 to set the overall output voltage. Normally R1 is chosen so that this current is the specified minimum load current of 10mA. The current out of the ADJ pin adds to the current from R1. The ADJ pin current is small, typically 50µA. The output voltage contribution of the ADJ pin current is small and only needs to be considered when very precise output voltage setting is required. Note that the top of the resistor divider should be connected directly to the SENSE pin for best regulation. See the section on grounding and Kelvin sensing above.

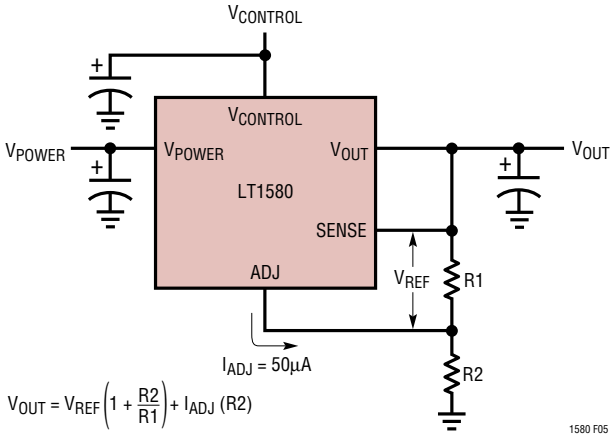

Figure 5. Setting Output Voltage

Protection Diodes

In normal operation the LT1580 does not require protection diodes. Older 3-terminal regulators require protection diodes between the V_{OUT} pin and the Input pin or between the ADJ pin and the V_{OUT} pin to prevent die overstress.

On the LT1580, internal resistors limit internal current paths on the ADJ pin. Therefore even with bypass capacitors on the ADJ pin, no protection diode is needed to ensure device safety under short-circuit conditions. The ADJ pin can be driven on a transient basis ±7V with respect to the output without any device degradation.

APPLICATIONS INFORMATION

A protection diode between the V_{OUT} pin and the V_{POWER} pin is usually not needed. An internal diode between the V_{OUT} pin and the V_{POWER} pin on the LT1580 can handle microsecond surge currents of 50A to 100A. Even with large value output capacitors it is difficult to obtain those values of surge currents in normal operation. Only with large values of output capacitance, such as 1000µF to 5000µF, and with the V_{POWER} pin instantaneously shorted to ground can damage occur. A crowbar circuit at the power input can generate those levels of current, and a diode from output to power input is then recommended. This is shown in Figure 6. Normal power supply cycling or system "hot plugging and unplugging" will not do any damage.

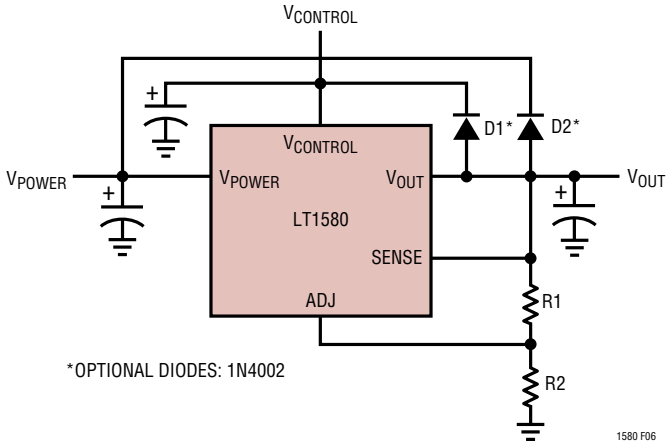

Figure 6. Optional Clamp Diodes Protect Against Input Crowbar Circuits

A protection diode between the V_{OUT} pin and the $V_{CONTROL}$ pin is usually not needed. An internal diode between the V_{OUT} pin and the $V_{CONTROL}$ pin on the LT1580 can handle microsecond surge currents of 1A to 10A. This can only occur if the $V_{CONTROL}$ pin is instantaneously shorted to ground with a crowbar circuit with large value output capacitors. Since the $V_{CONTROL}$ pin is usually a low current supply, this condition is unlikely. A protection diode from the V_{OUT} pin to the $V_{CONTROL}$ pin is recommended if the $V_{CONTROL}$ pin can be instantaneously shorted to ground. This is shown in Figure 6. Normal power supply cycling or system "hot plugging and unplugging" will not do any damage.

If the LT1580 is connected as a single supply device with the $V_{CONTROL}$ and V_{POWER} input pins shorted together the internal diode between the V_{OUT} and the V_{POWER} input pin will protect the $V_{CONTROL}$ input pin.

Like any other regulator exceeding the maximum input to output differential can cause the internal transistors to break down and none of the internal protection circuitry is then functional.

Thermal Considerations

The LT1580 has internal current and thermal limiting designed to protect the device under overload conditions. For continuous normal load conditions maximum junction temperature ratings must not be exceeded. It is important to give careful consideration to all sources of thermal resistance from junction to ambient. This includes junction-to-case, case-to-heat sink interface and heat sink resistance itself. Thermal resistance specifications are given in the electrical characteristics for both the Control section and the Power section of the device. The thermal resistance of the Control section is given as 0.65°C/W and junction temperature of the Control section is allowed to run at up to 125°C. The thermal resistance of the Power section is given as 2.7°C/W and the junction temperature of the Power section is allowed to run at up to 150°C. The difference in thermal resistances between Control and Power sections is due to thermal gradients between the power transistor and the control circuitry.

Virtually all of the power dissipated by the device is dissipated in the power transistor. The temperature rise in the power transistor will be greater than the temperature rise in the Control section so the effective thermal resistance, temperature rise per watt dissipated, will be lower in the Control section. At power levels below 12W the temperature gradient will be less than 25°C and the maximum ambient temperature will be determined by the junction temperature of the Control section. This is due to the lower maximum junction temperature in the Control section. At power levels greater than 12W the temperature gradient will be greater than 25°C and the maximum ambient temperature will be determined by the Power section. For both cases the junction temperature is determined by the total power dissipated in the device. For most

APPLICATIONS INFORMATION

low dropout applications the power dissipation will be less than 12W.

The power in the device is made up of two main components: the power in the output transistor and the power in the drive circuit. The additional power in the control circuit is negligible.

The power in the drive circuit will be equal to:

$$P_{DRIVE} = (V_{CONTROL} - V_{OUT})(I_{CONTROL})$$

where $I_{CONTROL}$ is equal to between $I_{OUT}/100$ (typ) and $I_{OUT}/58$ (max).

$I_{CONTROL}$ is a function of output current. A curve of $I_{CONTROL}$ vs I_{OUT} can be found in the Typical Performance Characteristics curves.

The power in the output transistor is equal to:

$$P_{OUTPUT} = (V_{POWER} - V_{OUT})(I_{OUT})$$

The total power is equal to:

$$P_{TOTAL} = P_{DRIVE} + P_{OUTPUT}$$

Junction-to-case thermal resistance is specified from the IC junction to the bottom of the case directly below the die. This is the lowest resistance path for heat flow. Proper mounting is required to ensure the best possible thermal flow from this area of the package to the heat sink. Thermal compound at the case-to-heat sink interface is strongly recommended. If the case of the device must be electronically isolated, a thermally conductive spacer can be used as long as the added contribution to thermal resistance is considered. Please consult Linear Technology's " Mounting Considerations for Power Semiconductors," *1990 Linear Applications Handbook, Volume 1*, Pages RR3-1 to RR3-20. Note that the case of the LT1580 is electrically connected to the output.

The following example illustrates how to calculate maximum junction temperature. Using an LT1580 and assuming:

$V_{CONTROL}$ (max continuous) = 5.25V (5V + 5%),
V_{POWER} (max continuous) = 3.465V (3.3V + 5%),
V_{OUT} = 2.5V, Iout = 4A,
T_A = 70°C, $\theta_{HEATSINK}$ = 4°C/W,
$\theta_{CASE\text{-}HEATSINK}$ = 1°C/W (with thermal compound)

Power dissipation under these conditions is equal to:

Total Power Dissipation = $P_{DRIVE} + P_{OUTPUT}$

$P_{DRIVE} = (V_{CONTROL} - V_{OUT})\ (I_{CONTROL})$

$I_{CONTROL} = I_{OUT}/58 = 4A/58 = 69mA$

$P_{DRIVE} = (5.25V - 2.5V)(69mA) = 190mW$

$P_{OUTPUT} = (V_{POWER} - V_{OUT})(I_{OUT})$

$= (3.465V - 2.5V)(4A) = 3.9W$

Total Power Dissipation = 4.05W

Junction temperature will be equal to:

$$T_J = T_A + P_{TOTAL}\ (\theta_{HEATSINK} + \theta_{CASE\text{-}HEATSINK} + \theta_{JC})$$

For the Control section:

$T_J = 70°C + 4.05W(4°C/W + 1°C/W + 0.65°C/W) = 93°C$

$93°C < 125°C = T_{JMAX}$ for Control Section

For the Power section:

$T_J = 70°C + 4.05W\ (4°C/W + 1°C/W + 2.7°C/W) = 101°C$

$101°C < 150°C = T_{JMAX}$ for Power Section

In both cases the junction temperature is below the maximum rating for the respective sections, ensuring reliable operation.

TYPICAL APPLICATION

2.5V/6A Regulator

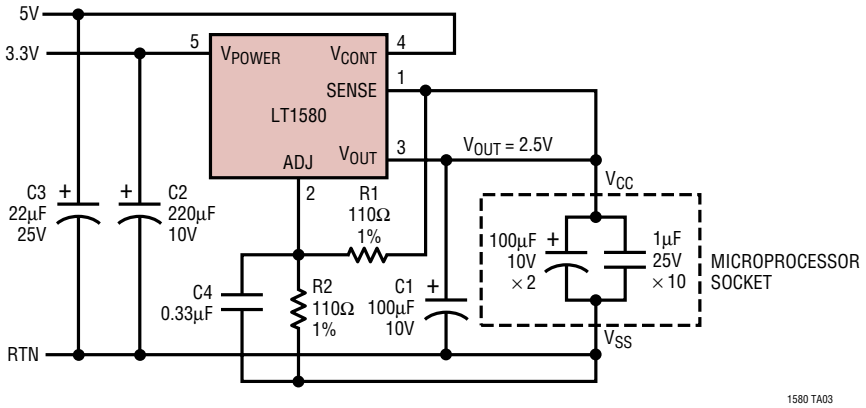

PACKAGE DESCRIPTION

Dimensions in inches (millimeters) unless otherwise noted.

Q Package
5-Lead Plastic DD Pak
(LTC DWG # 05-08-1461)

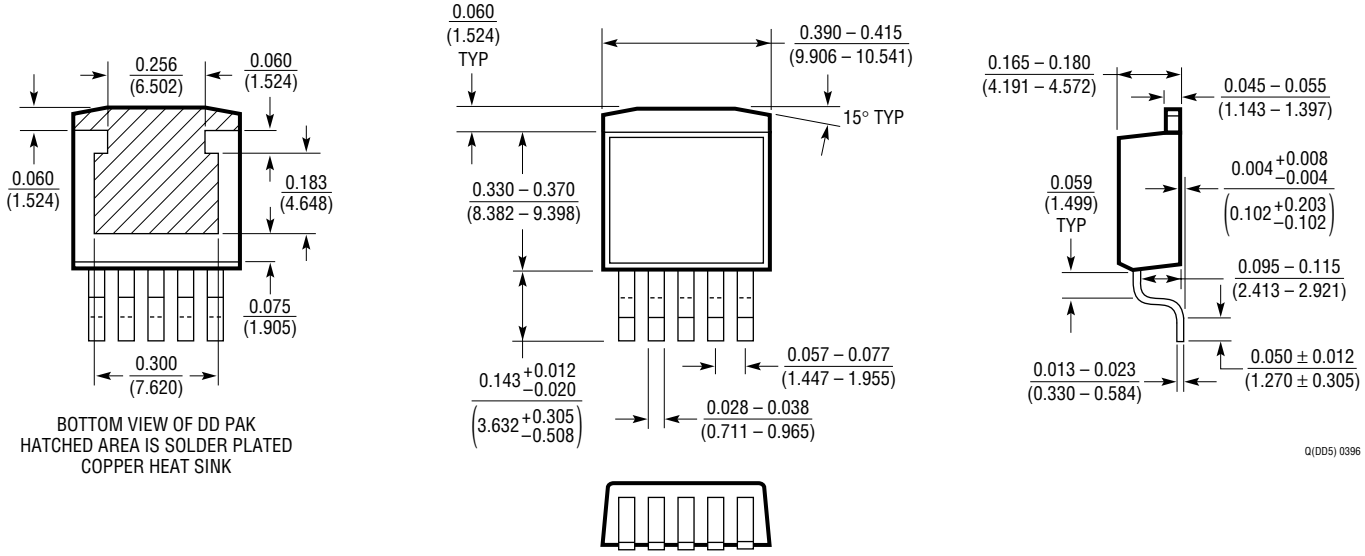

R Package
7-Lead Plastic DD Pak
(LTC DWG # 05-08-1462)

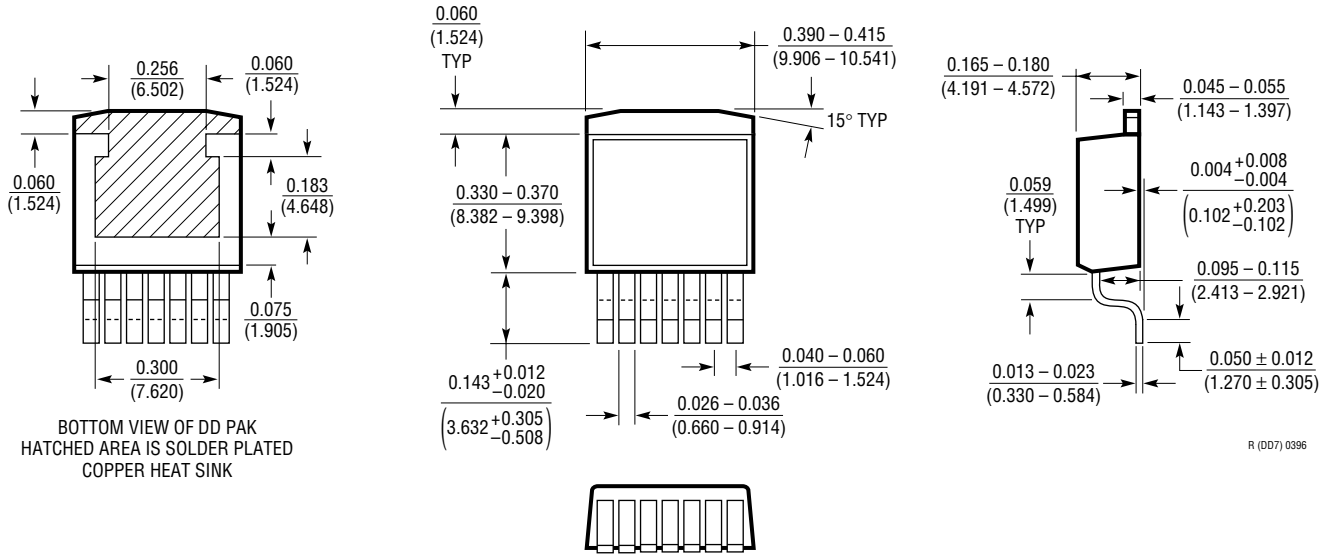

PACKAGE DESCRIPTION

Dimensions in inches (millimeters) unless otherwise noted.

T Package
5-Lead Plastic TO-220 (Standard)
(LTC DWG # 05-08-1421)

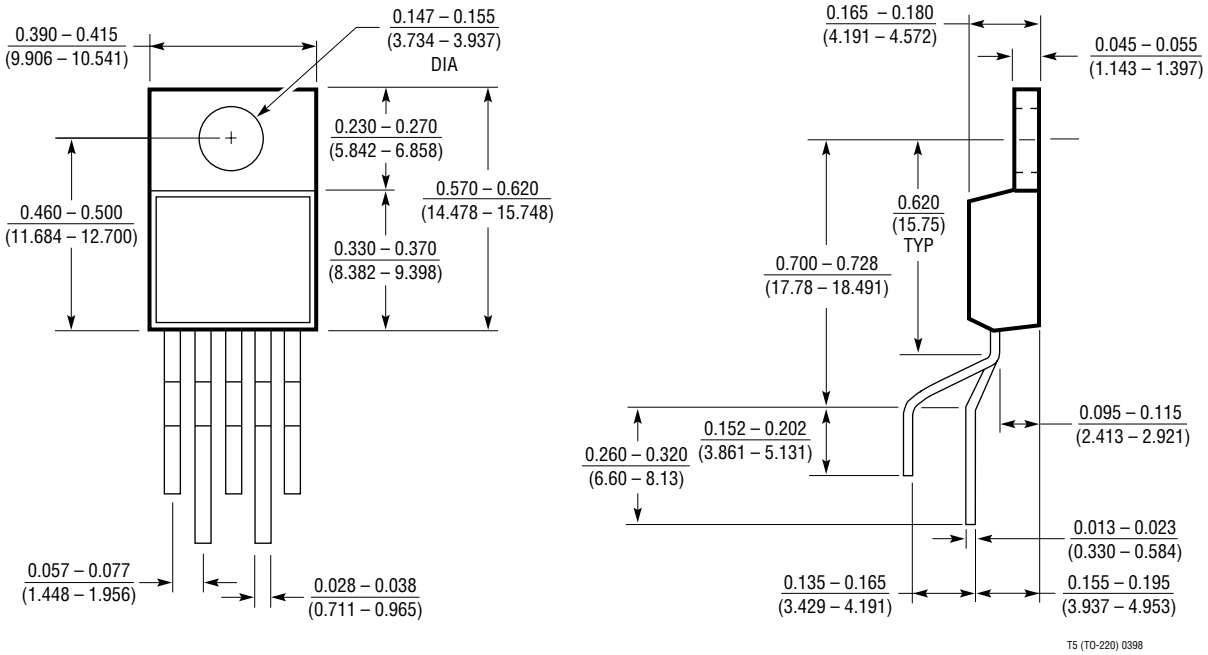

PACKAGE DESCRIPTION

Dimensions in inches (millimeters) unless otherwise noted.

T7 Package
7-Lead Plastic TO-220 (Standard)
(LTC DWG # 05-08-1422)

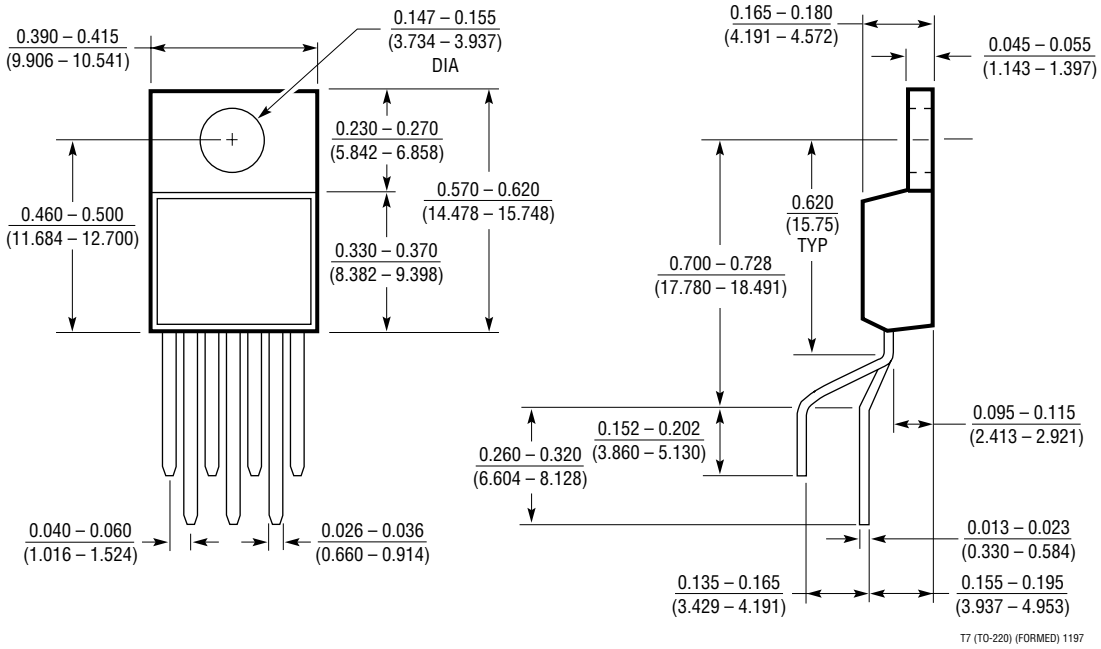

Information furnished by Linear Technology Corporation is believed to be accurate and reliable. However, no responsibility is assumed for its use. Linear Technology Corporation makes no representation that the interconnection of its circuits as described herein will not infringe on existing patent rights.

TYPICAL APPLICATION

Dual Regulators Power Pentium Processor or Upgrade CPU

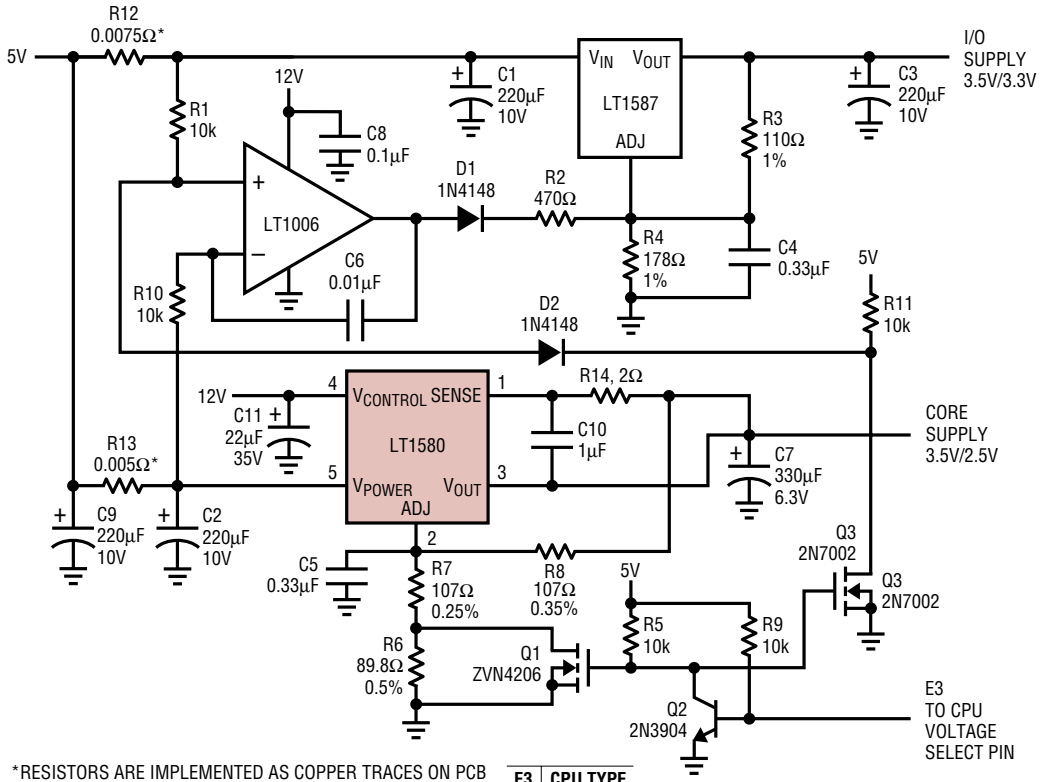

*RESISTORS ARE IMPLEMENTED AS COPPER TRACES ON PCB
IF 1 OZ COPPER, TRACE WIDTHS ARE 0.05 INCH
IF 2 OZ COPPER, TRACE WIDTHS ARE 0.025 INCH
R13 IS 0.83 INCHES LONG, R12 IS 1.24 INCHES LONG

E3	CPU TYPE
0	P55C
1	P54C

RELATED PARTS

PART NUMBER	DESCRIPTION	COMMENTS
LTC®1266	Synchronous Switching Controller	>90% Efficient High Current Microprocessor Supply
LTC1267	Dual High Efficiency Synchronous Switching Regulator	>90% Efficiency with Fixed 5V, 3.3V or Adjustable Outputs
LTC1430	High Power Synchronous Step-Down Switching Regulator	>90% Efficient High Current Microprocessor Supply
LT1584	7A Low Dropout Fast Transient Response Regulator	For High Performance Microprocessors
LT1585	4.6A Low Dropout Fast Transient Response Regulator	For High Performance Microprocessors
LT1587	3A Low Dropout Fast Transient Response Regulator	For High Performance Microprocessors

Linear Technology Corporation
1630 McCarthy Blvd., Milpitas, CA 95035-7417
(408)432-1900 • FAX: (408) 434-0507 • www.linear-tech.com
158025fas, sn158025 LT/GP 0598 2K REV A • PRINTED IN USA
© LINEAR TECHNOLOGY CORPORATION 1995

Looking for pricing, stock, or lifecycle information?

Click below to explore more details on WIN SOURCE:

- View LT1580IR-2.5#PBF on WIN SOURCE
- Linear Technology Information

Optimize Your Supply Chain with WIN SOURCE Solutions

- Global Sourcing Solution
- Obsolete Management
- Cost Control Management
- Shortage Management
- Alternative Solution
- Excess Inventory Management