WINSOURCE ELECTRONICS

THE DATASHEET OF

SBR40U100CT-G

SBR40U100CT

40A SBR®
SUPER BARRIER RECTIFIER

Features

- Ultra Low Forward Voltage Drop
- Excellent High Temperature Stability
- Patented Super Barrier Rectifier Technology
- Soft, Fast Switching Capability
- 150ºC Operating Junction Temperature
- **Lead Free Finish, RoHS Compliant (Note 2)**
- **Also Available in Green Molding Compound (Note 5)**

Mechanical Data

- Case: TO-220AB
- Case Material: Molded Plastic, UL Flammability Classification Rating 94V-0
- Terminals: Matte Tin Finish annealed over Copper leadframe. Solderable per MIL-STD-202, Method 208 e3
- Marking Information: See Page 2
- Ordering Information: See Page 2
- Weight: 1.85 grams (approximate)



TO-220AB
Top View



TO-220AB
Bottom View

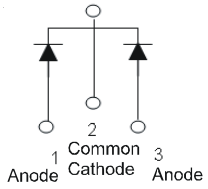

Package Pin Out
Configuration

Maximum Ratings @T_A = 25°C unless otherwise specified

Single phase, half wave, 60Hz, resistive or inductive load.
For capacitance load, derate current by 20%.

Characteristic	Symbol	Value	Unit
Peak Repetitive Reverse Voltage Working Peak Reverse Voltage DC Blocking Voltage	V_{RRM} V_{RWM} V_{RM}	100	V
Average Rectified Output Current @ T_C = 150ºC	I_O	40	A
Non-Repetitive Peak Forward Surge Current 8.3ms Single Half Sine-Wave Superimposed on Rated Load	I_{FSM}	235	A
Isolation Voltage (ITO-220AB Only) From terminal to heatsink t = 3 sec.	V_{AC}	2000	V

Thermal Characteristics

Characteristic	Symbol	Value	Unit
Typical Thermal Resistance (per leg) Thermal Resistance Junction to Case (Note 3)	$R_{\theta JC}$	2	ºC/W
Operating and Storage Temperature Range	T_J, T_{STG}	-65 to +150	ºC

Electrical Characteristics @T_A = 25°C unless otherwise specified

Characteristic	Symbol	Min	Typ	Max	Unit	Test Condition
Forward Voltage Drop (per leg)	V_F	-	0.67 0.60	0.72 0.64	V	I_F = 20A, T_J = 25ºC I_F = 20A, T_J = 125ºC
Leakage Current (Note 1)	I_R	-	-	0.5 40	mA	V_R = 100V, T_J = 25ºC V_R = 100V, T_J = 125ºC

Notes: 1. Short duration pulse test used to minimize self-heating effect.
2. EU Directive 2002/95/EC (RoHS). All applicable RoHS exemptions applied, see *EU Directive 2002/95/EC Annex Notes.*

SBR is a registered trademark of Diodes Incorporated.

© Diodes Incorporated

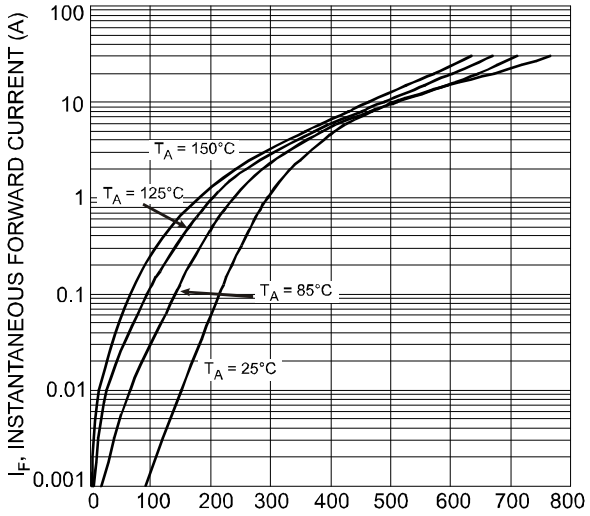

Fig.1 Typical Forward Characteristics

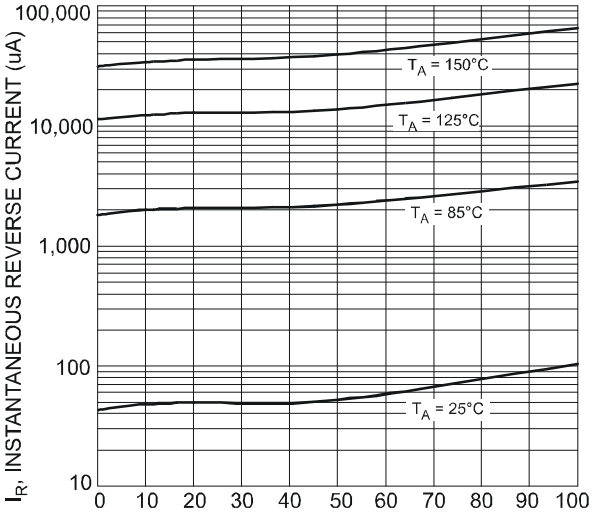

Fig. 2 Typical Reverse Characteristics

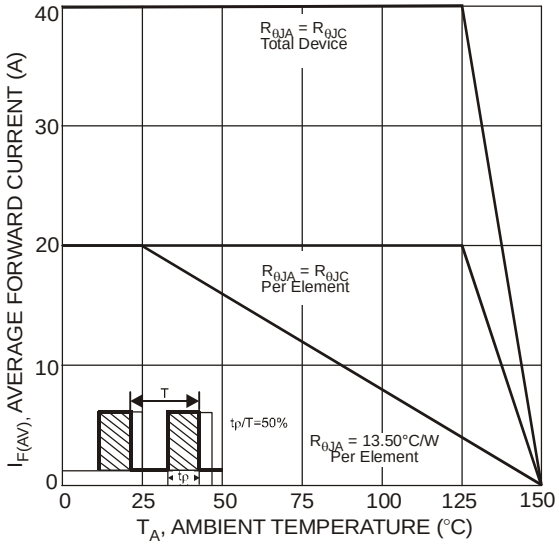

Fig. 3 Forward Current Derating Curve

Ordering Information (Notes 3 and 4)

Part Number	Case	Packaging
SBR40U100CT	TO-220AB	50 pieces/tube
SBR40U100CT-G	TO-220AB	50 pieces/tube

Notes: 3. For packaging details, go to our website at http://www.diodes.com/datasheets/ap02007.pdf.
4. For Green Molding Compound version part numbers, add "-G" suffix to part number above. Examples: SBR40U100CT-G

Marking Information

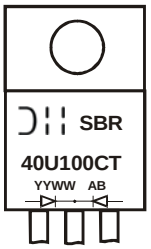

SBR40U100CT = Product Type Marking Code
AB = Foundry and Assembly Code
YYWW = Date Code Marking
YY = Last two digits of year (ex: 07 = 2007)
WW = Week (01-52)

SBR is a registered trademark of Diodes Incorporated.

© Diodes Incorporated

Package Outline Dimensions

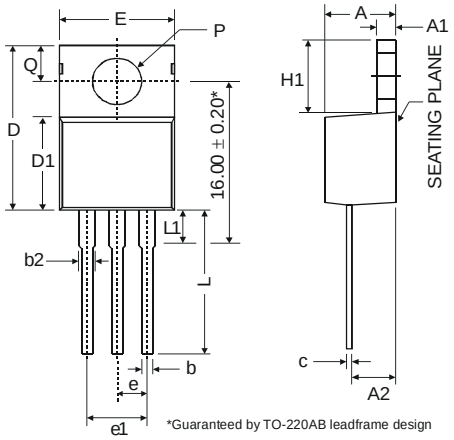

TO-220AB			
Dim	**Min**	**Typ**	**Max**
A	3.56	-	4.82
A1	0.51	-	1.39
A2	2.04	-	2.92
b	0.39	0.81	1.01
b2	1.15	1.24	1.77
c	0.356	-	0.61
D	14.22	-	16.51
D1	8.39	-	9.01
e	2.54		
e1	5.08		
E	9.66	-	10.66
H1	5.85	-	6.85
L	12.70	-	14.73
L1	-	-	6.35
P	3.54	-	4.08
Q	2.54	-	3.42
All Dimensions in mm			

IMPORTANT NOTICE

Diodes Incorporated and its subsidiaries reserve the right to make modifications, enhancements, improvements, corrections or other changes without further notice to any product herein. Diodes Incorporated does not assume any liability arising out of the application or use of any product described herein; neither does it convey any license under its patent rights, nor the rights of others. The user of products in such applications shall assume all risks of such use and will agree to hold Diodes Incorporated and all the companies whose products are represented on our website, harmless against all damages.

LIFE SUPPORT

Diodes Incorporated products are not authorized for use as critical components in life support devices or systems without the expressed written approval of the President of Diodes Incorporated.

SBR is a registered trademark of Diodes Incorporated.

© Diodes Incorporated

Looking for pricing, stock, or lifecycle information?

Click below to explore more details on WIN SOURCE:

- View SBR40U100CT-G on WIN SOURCE
- Diodes Incorporated Information

Optimize Your Supply Chain with WIN SOURCE Solutions

- Global Sourcing Solution
- Obsolete Management
- Cost Control Management
- Shortage Management
- Alternative Solution
- Excess Inventory Management