THE DATASHEET OF

SBR10U200CT

SBR10U200CT/SBR10U200CTFP/SBR10U200CTB

10A SBR
SUPER BARRIER RECTIFIER

Features

- Ultra Low Forward Voltage Drop
- Excellent High Temperature Stability
- Patented Super Barrier Rectifier Technology (SBR®)
- Soft, Fast Switching Capability
- TO220AB, ITO220AB, TO263AB (D2PAK)
  - **Lead-Free Finish; RoHS Compliant (Notes 1 & 2)**
- Available in "Green" Packages: TO220AB, ITO220AB, TO263AB (D2PAK)
  - **Lead-Free Finish; RoHS Compliant (Notes 1 & 2)**
  - **Halogen and Antimony Free. "Green" Device (Note 3)**
- **For automotive applications requiring specific change control (i.e. parts qualified to AEC-Q100/101/104/200, PPAP capable, and manufactured in IATF 16949 certified facilities), please contact us or your local Diodes representative. https://www.diodes.com/quality/product-definitions/**

Mechanical Data

- Package: TO220AB, ITO220AB, TO263AB
- Package Material: Molded Plastic, UL Flammability Classification Rating 94V-0
- Terminals: Matte Tin Finish Annealed over Copper Leadframe. Solderable per MIL-STD-202, Method 208 e3
- Weight: TO220AB – 1.85 grams (Approximate)
  ITO220AB – 1.65 grams (Approximate)
  TO263AB (D2PAK) – 2.1 grams (Approximate)

TO220AB

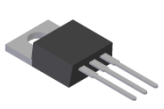

Top View

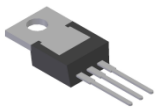

Bottom View

ITO220AB

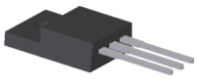

Top View

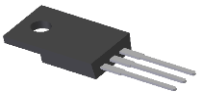

Bottom View

TO263AB (D2PAK)



Top View

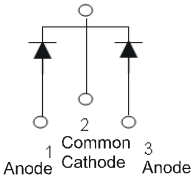

Package Pin-Out Configuration

Ordering Information (Notes 4 & 5)

Part Number	Package	Packing	
		Qty.	Carrier
SBR10U200CT	TO220AB	50 Pieces	Tube
SBR10U200CT-G	TO220AB	50 Pieces	Tube
SBR10U200CTFP	ITO220AB	50 Pieces	Tube
SBR10U200CTFP-G	ITO220AB	50 Pieces	Tube
SBR10U200CTB	TO263AB (D2PAK)	50 Pieces	Tube
SBR10U200CTB-G	TO263AB (D2PAK)	50 Pieces	Tube
SBR10U200CTB-13-G	TO263AB (D2PAK)	800 Pieces	Tape & Reel

Notes:
1. EU Directive 2002/95/EC (RoHS), 2011/65/EU (RoHS 2) & 2015/863/EU (RoHS 3) compliant. All applicable RoHS exemptions applied.
2. See https://www.diodes.com/quality/lead-free/ for more information about Diodes Incorporated's definitions of Halogen- and Antimony-free, "Green" and Lead-free.
3. Halogen- and Antimony-free "Green" products are defined as those which contain <900ppm bromine, <900ppm chlorine (<1500ppm total Br + Cl) and <1000ppm antimony compounds.
4. For packaging details, go to our website at https://www.diodes.com/design/support/packaging/diodes-packaging/.
5. For Green Molding Compound version part numbers, add "-G" suffix to part number above. Example: SBR10U200CTB-G.

SBR is a registered trademark of Diodes Incorporated.

© 2022 Copyright Diodes Incorporated. All Rights Reserved.

Marking Information



SBR10U200CT = Product Type Marking Code
AB = Foundry and Assembly Code
YYWW = Date Code Marking
YY = Last Two Digits of Year (ex: 22 = 2022)
WW = Week (01 to 53)



SBR10U200CTFP = Product Type Marking Code
AB = Foundry and Assembly Code
YYWW = Date Code Marking
YY = Last Two Digits of Year (ex: 22 = 2022)
WW = Week (01 to 53)

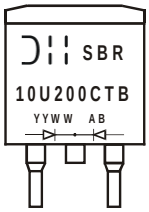

SBR10U200CTB = Product Type Marking Code
AB = Foundry and Assembly Code
YYWW = Date Code Marking
YY = Last Two Digits of Year (ex: 22 = 2022)
WW = Week (01 to 53)

Maximum Ratings (Per Leg) (@T_A = +25°C, unless otherwise specified.)

Single phase, half wave, 60Hz, resistive or inductive load.
For capacitive load, derate current by 20%.

Characteristic	Symbol	Value	Unit
Peak Repetitive Reverse Voltage Working Peak Reverse Voltage DC Blocking Voltage	V_{RRM} V_{RWM} V_{RM}	200	V
Average Rectified Output Current (Per Leg) (Total)	I_O	5 10	A
Non-Repetitive Peak Forward Surge Current 8.3ms Single Half Sine-Wave Superimposed on Rated Load	I_{FSM}	150	A
Peak Repetitive Reverse Surge Current (2µs-1kHz)	I_{RRM}	3	A
Isolation Voltage (ITO220AB Only) From Terminal to Heatsink t = 3 sec.	V_{AC}	2000	V

Thermal Characteristics (Per Leg)

Characteristic	Symbol	Value	Unit
Typical Thermal Resistance Package = TO220AB & TO263AB (D2PAK) Package = ITO220AB	$R_{\theta JC}$	2 4	°C/W
Operating and Storage Temperature Range	T_J, T_{STG}	-65 to +175	°C

Electrical Characteristics (Per Leg) (@T_A = +25°C, unless otherwise specified.)

Characteristic	Symbol	Min	Typ	Max	Unit	Test Condition
Forward Voltage Drop	V_F	— — —	— 0.60 —	0.82 0.65 0.88	V	I_F = 5A, T_J = +25°C I_F = 5A, T_J = +125°C I_F = 10A, T_J = +25°C
Leakage Current (Note 6)	I_R	— —	— —	0.2 25	mA	V_R = 200V, T_J = +25°C V_R = 200V, T_J = +125°C
Reverse Recovery Time	t_{rr}	—	24	30	ns	I_F = 0.5A, I_R = 1A, I_{RR} = 0.25A
		—	20	25		I_F = 1A, V_R = 30V dI/dt = 100A/µs, T_J = +25°C

Note: 6. Short duration pulse test used to minimize self-heating effect.

© 2022 Copyright Diodes Incorporated. All Rights Reserved.

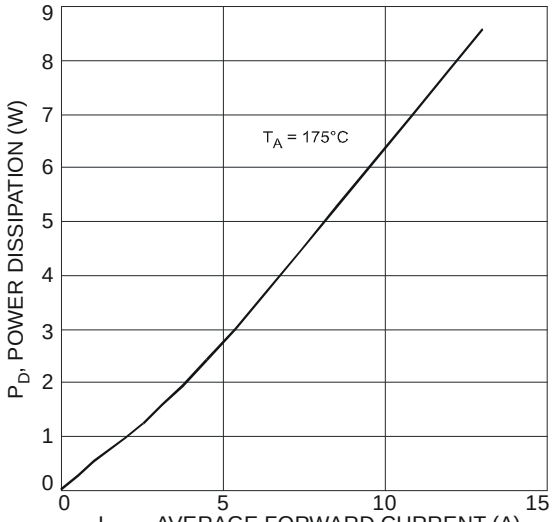

Fig. 1 Forward Power Dissipation

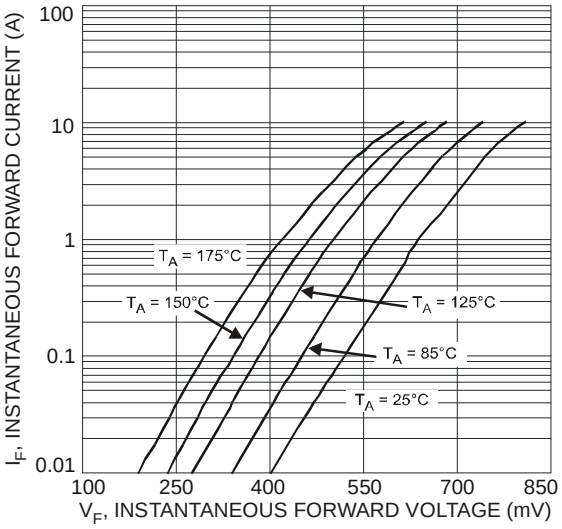

Fig. 2 Typical Forward Characteristics

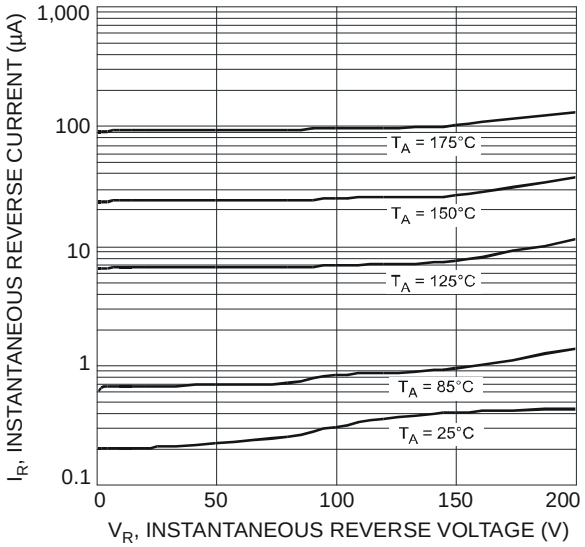

Fig. 3 Typical Reverse Characteristics

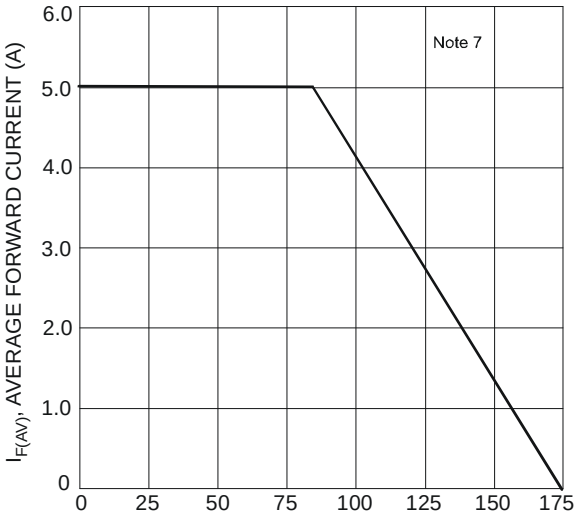

Fig. 4 Forward Current Derating Curve

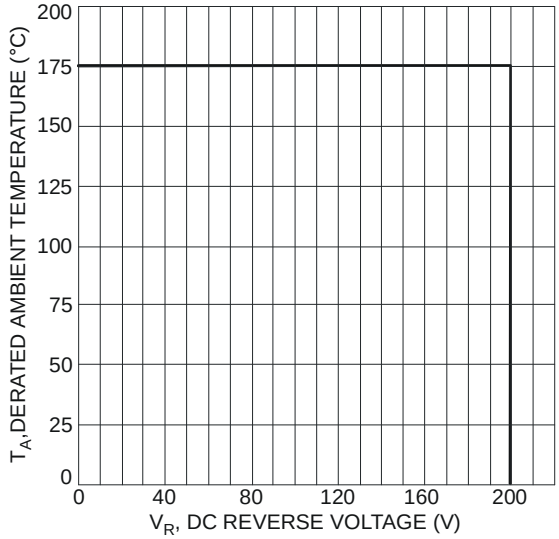

Fig. 5 Operating Temperature Derating

Note: 7. Using heatsink (by black aluminum 45mm x 20mm x 12mm).

© 2022 Copyright Diodes Incorporated. All Rights Reserved.

Package Outline Dimensions

Please see http://www.diodes.com/package-outlines.html for the latest version.

TO220AB

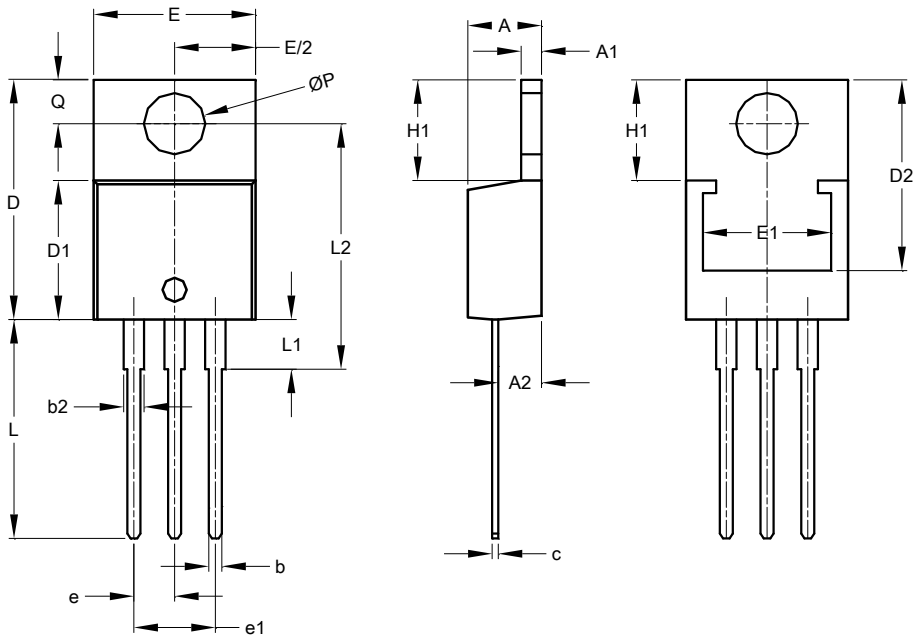

TO220AB			
Dim	**Min**	**Max**	**Typ**
A	3.56	4.82	-
A1	0.51	1.39	-
A2	2.04	2.92	-
b	0.39	1.01	0.81
b2	1.15	1.77	1.24
c	0.356	0.61	-
D	14.22	16.51	-
D1	8.39	9.01	-
D2	11.45	12.87	-
e	-	-	2.54
e1	-	-	5.08
E	9.66	10.66	-
E1	6.86	8.89	-
H1	5.85	6.85	-
L	12.70	14.73	-
L1	-	4.42	-
L2	15.80	17.51	16.00
P	3.54	4.08	-
Q	2.54	3.42	-
All Dimensions in mm			

ITO220AB

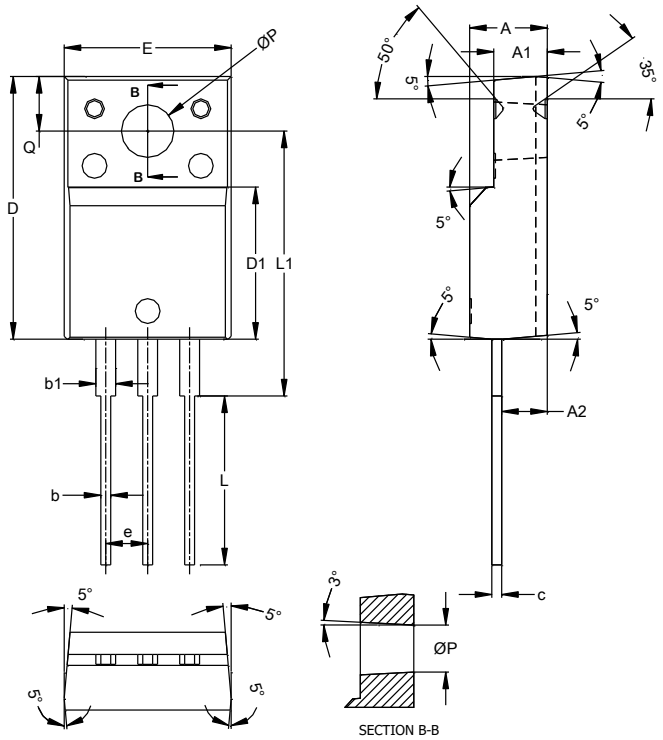

ITO220AB			
Dim	**Min**	**Max**	**Typ**
A	4.50	4.90	4.70
A1	3.04	3.44	3.24
A2	2.56	2.96	2.76
b	0.50	0.75	0.60
b1	1.10	1.35	1.20
c	0.50	0.70	0.60
D	15.67	16.07	15.87
D1	8.99	9.39	9.19
E	9.91	10.31	10.11
e	--	--	2.54
L	9.45	10.05	9.75
L1	15.80	16.20	16.00
P	2.98	3.38	3.18
Q	3.10	3.50	3.30
All Dimensions in mm			

© 2022 Copyright Diodes Incorporated. All Rights Reserved.

Package Outline Dimensions (continued)

Please see http://www.diodes.com/package-outlines.html for the latest version.

TO263AB (D2PAK)

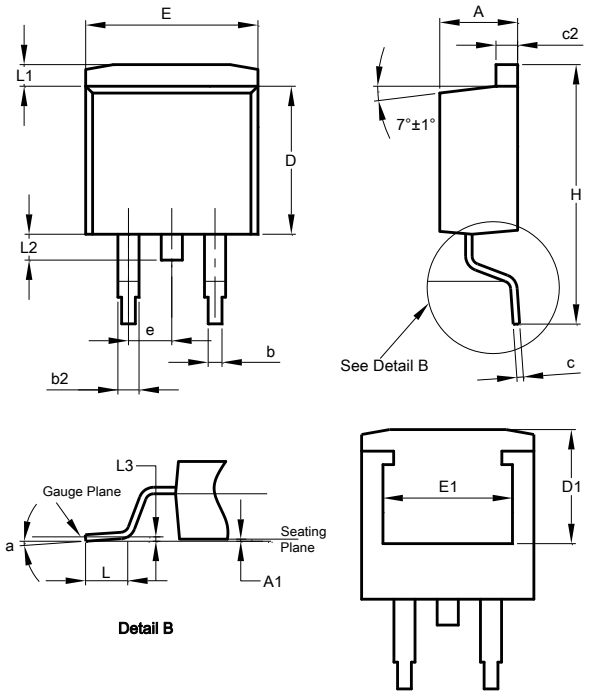

TO263AB (D2PAK)			
Dim	**Min**	**Max**	**Typ**
A	4.07	4.82	-
A1	0.00	0.25	-
b	0.51	0.99	-
b2	1.15	1.77	-
c	0.356	0.73	-
c2	1.143	1.65	-
D	8.39	9.65	-
D1	6.55	6.95	-
e	2.54 TYP		
E	9.66	10.66	-
E1	6.23	8.23	-
H	14.61	15.87	-
L	1.78	2.79	-
L1	-	1.67	-
L2	-	1.77	-
L3	-	-	0.254
a	0°	8°	-
All Dimensions in mm			

Suggested Pad Layout

Please see http://www.diodes.com/package-outlines.html for the latest version.

TO263AB (D2PAK)

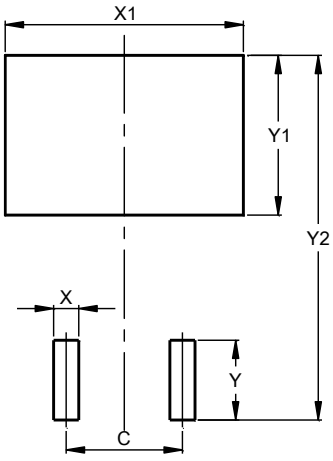

Dimensions	Value (in mm)
C	5.08
X	1.10
X1	10.41
Y	3.50
Y1	7.01
Y2	15.99

© 2022 Copyright Diodes Incorporated. All Rights Reserved.

IMPORTANT NOTICE

1. DIODES INCORPORATED (Diodes) AND ITS SUBSIDIARIES MAKE NO WARRANTY OF ANY KIND, EXPRESS OR IMPLIED, WITH REGARDS TO ANY INFORMATION CONTAINED IN THIS DOCUMENT, INCLUDING, BUT NOT LIMITED TO, THE IMPLIED WARRANTIES OF MERCHANTABILITY, FITNESS FOR A PARTICULAR PURPOSE OR NON-INFRINGEMENT OF THIRD PARTY INTELLECTUAL PROPERTY RIGHTS (AND THEIR EQUIVALENTS UNDER THE LAWS OF ANY JURISDICTION).

2. The Information contained herein is for informational purpose only and is provided only to illustrate the operation of Diodes' products described herein and application examples. Diodes does not assume any liability arising out of the application or use of this document or any product described herein. This document is intended for skilled and technically trained engineering customers and users who design with Diodes' products. Diodes' products may be used to facilitate safety-related applications; however, in all instances customers and users are responsible for (a) selecting the appropriate Diodes products for their applications, (b) evaluating the suitability of Diodes' products for their intended applications, (c) ensuring their applications, which incorporate Diodes' products, comply the applicable legal and regulatory requirements as well as safety and functional-safety related standards, and (d) ensuring they design with appropriate safeguards (including testing, validation, quality control techniques, redundancy, malfunction prevention, and appropriate treatment for aging degradation) to minimize the risks associated with their applications.

3. Diodes assumes no liability for any application-related information, support, assistance or feedback that may be provided by Diodes from time to time. Any customer or user of this document or products described herein will assume all risks and liabilities associated with such use, and will hold Diodes and all companies whose products are represented herein or on Diodes' websites, harmless against all damages and liabilities.

4. Products described herein may be covered by one or more United States, international or foreign patents and pending patent applications. Product names and markings noted herein may also be covered by one or more United States, international or foreign trademarks and trademark applications. Diodes does not convey any license under any of its intellectual property rights or the rights of any third parties (including third parties whose products and services may be described in this document or on Diodes' website) under this document.

5. Diodes' products are provided subject to Diodes' Standard Terms and Conditions of Sale (https://www.diodes.com/about/company/terms-and-conditions/terms-and-conditions-of-sales/) or other applicable terms. This document does not alter or expand the applicable warranties provided by Diodes. Diodes does not warrant or accept any liability whatsoever in respect of any products purchased through unauthorized sales channel.

6. Diodes' products and technology may not be used for or incorporated into any products or systems whose manufacture, use or sale is prohibited under any applicable laws and regulations. Should customers or users use Diodes' products in contravention of any applicable laws or regulations, or for any unintended or unauthorized application, customers and users will (a) be solely responsible for any damages, losses or penalties arising in connection therewith or as a result thereof, and (b) indemnify and hold Diodes and its representatives and agents harmless against any and all claims, damages, expenses, and attorney fees arising out of, directly or indirectly, any claim relating to any noncompliance with the applicable laws and regulations, as well as any unintended or unauthorized application.

7. While efforts have been made to ensure the information contained in this document is accurate, complete and current, it may contain technical inaccuracies, omissions and typographical errors. Diodes does not warrant that information contained in this document is error-free and Diodes is under no obligation to update or otherwise correct this information. Notwithstanding the foregoing, Diodes reserves the right to make modifications, enhancements, improvements, corrections or other changes without further notice to this document and any product described herein. This document is written in English but may be translated into multiple languages for reference. Only the English version of this document is the final and determinative format released by Diodes.

8. Any unauthorized copying, modification, distribution, transmission, display or other use of this document (or any portion hereof) is prohibited. Diodes assumes no responsibility for any losses incurred by the customers or users or any third parties arising from any such unauthorized use.

9. This Notice may be periodically updated with the most recent version available at https://www.diodes.com/about/company/terms-and-conditions/important-notice

DIODES is a trademark of Diodes Incorporated in the United States and other countries.
The Diodes logo is a registered trademark of Diodes Incorporated in the United States and other countries.
© 2022 Diodes Incorporated. All Rights Reserved.

www.diodes.com

© 2022 Copyright Diodes Incorporated. All Rights Reserved.

Looking for pricing, stock, or lifecycle information?

Click below to explore more details on WIN SOURCE:

- View SBR10U200CT on WIN SOURCE
- Diodes Incorporated Information

Optimize Your Supply Chain with WIN SOURCE Solutions

- Global Sourcing Solution
- Obsolete Management
- Cost Control Management
- Shortage Management
- Alternative Solution
- Excess Inventory Management