USB 3.1 GEN2 10Gbps Mux/Demux Switch with I2C Control for Type-C Connector

Features

- USB Type-C™ Specification 1.1
- Dual Differential Channel, 10Gbps 2:1 USB 3.1 Gen 2 Mux/DeMux
- Switches USB controller and Type-C connector
- Supports Host-mode/Device-mode/Dual-role mode
- Auto-configure ports orientation through CC detection
- Supports VCONN to power active cables and other accessories
- Supports over-current protection and over-voltage protection for VCONN
- Allow both pin control and I²C interface
- Integrated power switches, high-precision resistors and current sources for CC pins
- Provides support for default current, 1.5A and 3A modes with I²C control
- Output indicator for plug-in detection
- Power saving mode
- Wide power supply range : 2.7V – 5.5V
- Temperature Range: -40ºC to 85ºC
- Packaging (Pb-free & Green):
  – 24- contact, TQFN(2mm x 4mm)

Applications

- Notebooks
- Mobile Phones
- Tablets
- Docking Station

Pin Configuration

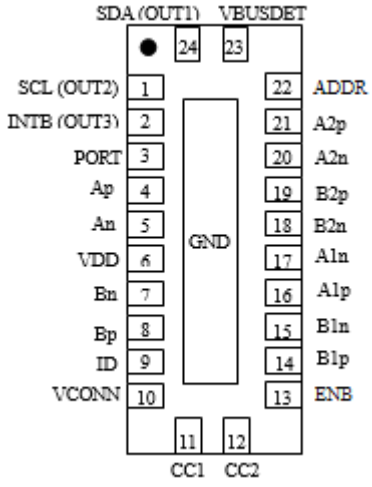

Figure 1 Pin Assignment (Top View)

Description

The PI5USB31213 is a 10Gbps dual differential channel bi-directional multiplexer/de-multiplexer switch solution for USB 3.1 Gen2 Type-C connector applications. PI5USB31213 switches between the USB controller and the new Type-C connector. It supports host mode, device mode and dual-role mode ports with automatic configuration based on the voltage levels detected on CC pin. It offers excellent signal integrity for high-speed signals at low power dissipation.

PI5USB31213 supports both pin and I²C control base on ADDR pin setting. In pin control mode, the PORT input pin determines the port setting, whether this is a host, device or dual-role port. In host mode, the system can monitor ID pin to know the connector status while default current mode is set. Systems running in device mode can monitor system VBUS for connector status as well as OUT1 and OUT2 pins for host's charging profile capability.

Enabling I²C control mode allow high flexibility for port control and communications through registers read/write in PI5USB31213. There is also flexibility to support Default, 1.5A and 3A current modes. An interrupt signal for indicating changes with the I²C registers is sent to the master to notify the system any change in the Type-C connector while in parallel the system can still monitor ID pin.

Block Diagram

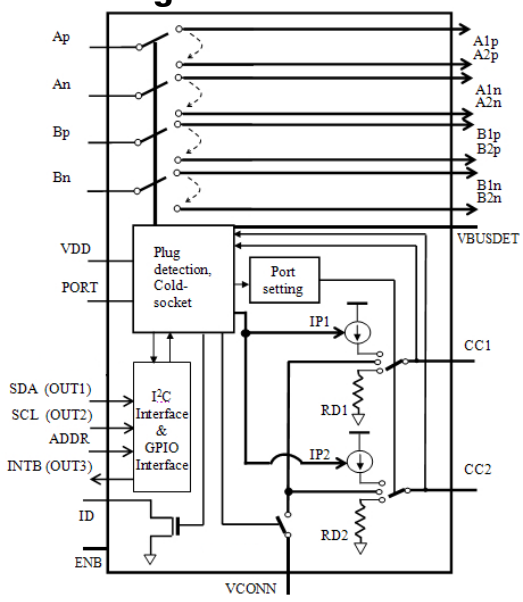

Figure2. PI5USB31213 Block diagram

© Diodes Incorporated

Pin Descriptions

Pin Number	Pin Name	I/O	Description
1	SCL/OUT2	I/O	I^2C communication clock signal. Dual function as open drain Type-C Current Mode Detect 1 in pin control mode when port is a device; OUT2 OUT1 Current Mode Hi-Z Hi-Z Default Hi-Z Low Medium Low Low High
2	INTB/OUT3	O	Open drain output. In I^2C control mode, this is an active LOW interrupt signal for indicating changes in I^2C registers. Dual function as analog audio adapter detection in pin control mode: OUT3=Hi-Z – Not detected; OUT3=Low – Analog audio adapter detected
3	PORT	I	Tri-level input pin to indicate port mode (for pin control only): PORT is floating –Try.SNK Dual Role (DRP); PORT=VDD – Host (SRC); PORT=GND – Device (SNK)
4	Ap	I/O	Differential USB 3.1 GEN2 signal A (PHY side)
5	An	I/O	Differential USB 3.1 GEN2 signal A (PHY side)
6	VDD	Power	Positive supply voltage from VBAT
7	Bn	I/O	Differential USB 3.1 GEN2 signal B (PHY side)
8	Bp	I/O	Differential USB 3.1 GEN2 signal B (PHY side)
9	ID	O	Open drain output. Asserted low when CC pin detected device attachment when port is a Host (or dual-role acting as Host), otherwise ID is hi-z.
10	VCONN	Power	Supply voltage for VCONN
11	CC1	I/O	Type-C Configuration channel signals
12	CC2	I/O	Type-C Configuration channel signals
13	ENB	I	Active-low enable input pin (with internal weak pull up) ENB=VDD – Disabled/Low Power State ENB=GND – Enabled/Active State
14	B1p	I/O	Differential USB 3.1 GEN2 signal B for position 1 connection
15	B1n	I/O	Differential USB 3.1 GEN2 signal B for position 1 connection
16	A1p	I/O	Differential USB 3.1 GEN2 signal A for position 1 connection
17	A1n	I/O	Differential USB 3.1 GEN2 signal A for position 1 connection
18	B2n	I/O	Differential USB 3.1 GEN2 signal B for position 2 connection
19	B2p	I/O	Differential USB 3.1 GEN2 signal B for position 2 connection
20	A2n	I/O	Differential USB 3.1 GEN2 signal A for position 2 connection
21	A2p	I/O	Differential USB 3.1 GEN2 signal A for position 2 connection
22	ADDR	I	Tri-level input pin to indicate I^2C address or pin control mode: ADDR is floating – Pin control mode; ADDR=VDD – I^2C enabled with ADDR bit 6 equal to 1; ADDR=GND – I^2C enabled with ADDR bit 6 equal to 0
23	VBUSDET	I	VBUS detection
24	SDA/OUT1	I/O	I^2C communication data signal. Dual function as open drain Type-C Current Mode Detect 1 in pin control mode when port is a device; OUT2 OUT1 Current Mode Hi-Z Hi-Z Default Hi-Z Low Medium Low Low High
Thermal Pad	GND	Ground	Ground

© Diodes Incorporated

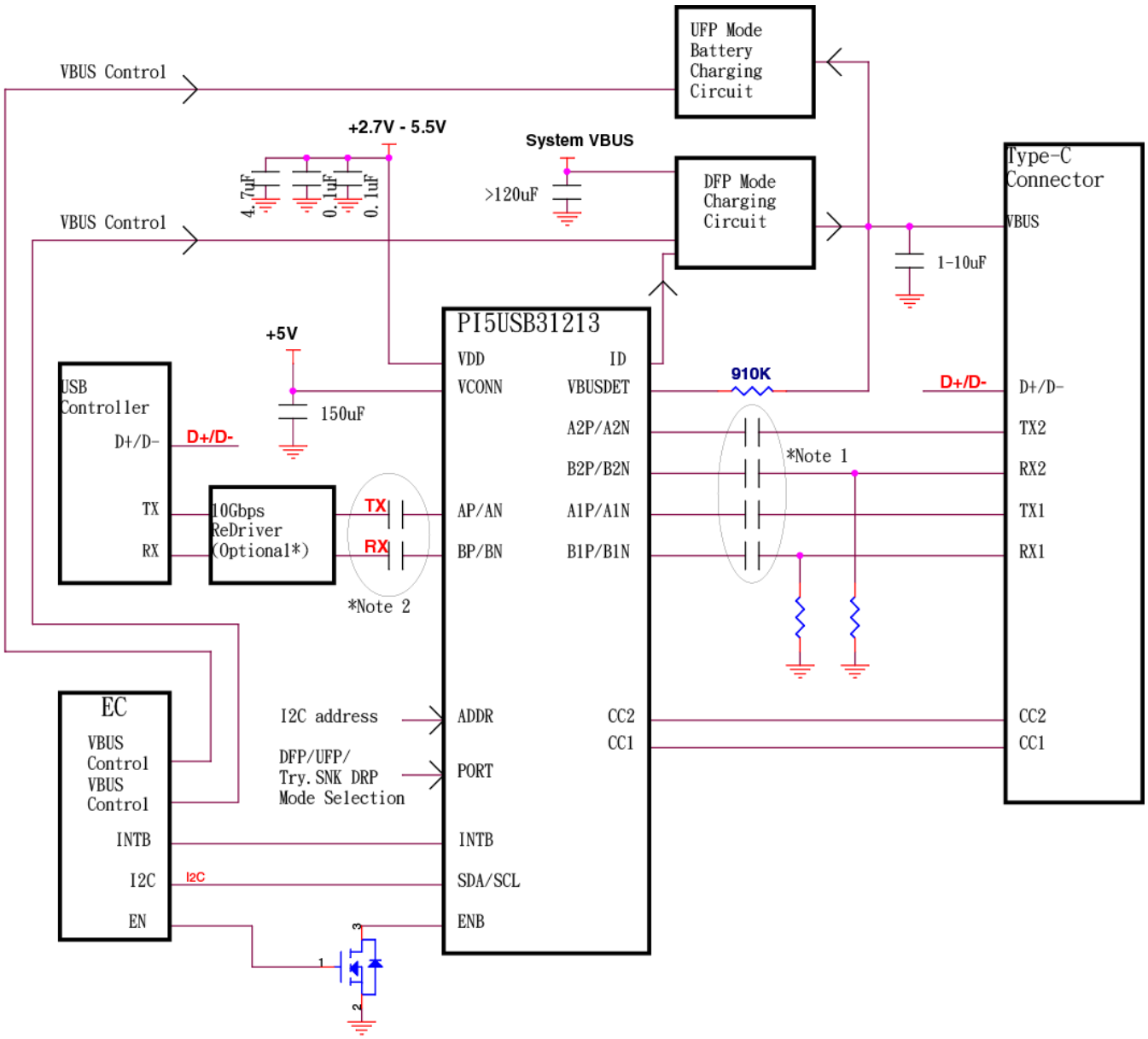

*Note 1: USB 3.1 spec requires the TX signals are AC coupled.
RX signals are AC coupled to support non-complaint Type-C devices.

*Note 2: TX signals are AC coupled if ReDriver TX bias level is >0.8V.
RX signals are AC coupled if ReDriver RX bias level is >0.8V.

PI5USB31213 –Typical Application Circuit

© Diodes Incorporated

Maximum Ratings

Storage Temperature	-65°C to +150°C
Supply Voltage from Battery/Baseband	-0.5V to +6.0V
Switch I/O Voltage USB	-0.5V to +3V
ID Pin Sink current	10mA
ESD: HBM all pins	2000V
CC1/CC2 Pin Sink Current	3mA
V_{BUSDET} Pin Sink Current	0.1mA
Continuous Output Current (CC1, CC2)	Internally Limited

Note:
Stresses greater than those listed under MAXIMUM RATINGS may cause permanent damage to the device. This is a stress rating only and functional operation of the device at these or any other conditions above those indicated in the operational sections of this specification is not implied. Exposure to absolute maximum rating conditions for extended periods may affect reliability.

Recommended Operation Conditions

Symbol	Parameter	Min.	Max.	Units
V_{DD}	Battery Supply Voltage	2.7	5.5	V
V_{BUS}	System VBUS Voltage	4	28	V
V_{BAT_TH}	Battery Supply Under-Voltage Lockout, falling edge	2.2	2.65	V
V_{CONN}	VCONN Supply Voltage Range	2.7	5.5	V
V_{SWCM}	Switch I/O Common Mode Voltage	0	2	V
V_{IH}	High level input voltage (SCL, SDA, ENB)	1.05		V
V_{IL}	Low level input voltage (SCL, SDA, ENB)		0.4	V
$V3_{IH}$	High level input voltage (ADDR,PORT)	VDD-0.4		V
$V3_{IL}$	Low level input voltage (ADDR,PORT)		0.4	V
V_{IN_CC12}	CC1, CC2 input voltage(1)		VDD+0.5	V
$V_{IN_VBUSDET}$	VBUSDET input voltage(2)		4.5	V
T_A	Operating Temperature	-40	85	℃

Note:
(1) CC1 and CC2 are internally clamped to ~VDD+1.0V.
(2) VBUSDET is internally clamped to ~5.5V

DC Electrical Characteristics

Min and Max apply for T_A between -40℃ to 85℃ and T_J up to +125℃ (unless otherwise noted). Typical values are referenced to V_{DD}=3.6V, T_A=+25℃

Symbol	Parameter	Test Conditions	Min.	Typ.	Max.	Units
USB SuperSpeed Switches (Axp, Axn, Bxp, Bxn)						
R_{SSON}(1)	USB3.0 SS TX/RX Switch On-Resistance	I_{LOAD} = -8mA, V_{in}= 0V	-	6	9	Ω
R_{SSBIAS}	USB3.0 DC Bias Resistance to Ground		-	200	-	kΩ
CC1/CC2 Configuration(Device mode, SNK)						
R_D	Device mode pull down resistor		4.6	5.1	5.6	kΩ
V_{TH3_SNK}	High current mode entry threshold		1.16	1.23	1.31	V
V_{TH2_SNK}	Medium current mode entry threshold		0.61	0.66	0.70	V
V_{TH1_SNK}	Default current mode entry threshold		0.15	0.2	0.25	V
CC1/CC2 Configuration(Host mode, SRC)						
I_P	Host mode pull up current source	Default current mode	64	80	96	µA
		Medium current mode (1.5A)	166	180	194	
		High current mode (3A)	304	330	356	
VBUS Detection						
V_{VBUS}	VBUS detection threshold	Rvbus=910kohm	2.5	3.0	4.0	V
VCONN						
R_{VCONN}	VCONN switch on-resistance	I_{LOAD} = 100mA, V_{CONN}= 5V	-	0.5	0.6	Ω
$I_{VCONN@80\%}$	VCONN output current at 80% VCONN	V_{CONN}= 5V, Vcc1 or Vcc2=4.5V	500	570	650	mA
V_{OVP}	VCONN over voltage protection		5.8	6.0	6.2	V
Host Interface Pins (INTB,ID,OUT1,OUT2,OUT3)						
V_{OL}	Output Low Voltage at 1.6mA Sink current(Open-Drain)		0	-	0.4	V

© Diodes Incorporated

Symbol	Parameter	Test Conditions	Min.	Typ.	Max.	Units
I_{OFF}	Off-state leakage current	$V_{INTB.ID/ID/OUT1/OUT2/OUT3}$	-	-	1	µA
Input Control Pins (ENB, ADDR, PORT, SCL, SDA)						
I_{IH}	High-level input current		-5	-	5	µA
I_{IL}	Low-level input current		-5	-	5	µA
Current Consumption						
I_{DD}	operating current, Device mode	SNK connects to SRC	-	200	300	µA
	operating current, Host mode	SRC connects to SNK Default current mode	-	280	400	µA
I_{DEV_STBY}	Device mode standby current	V_{DD}=3.6V, Floating CC1 and CC2	-	45	65	µA
I_{DUAL_STBY}	Dual-Role mode standby current	V_{DD}=3.6V, Floating CC1 and CC2	-	55	75	µA
I_{HOST_STBY}	Host mode standby current	V_{DD}=3.6V, Floating CC1 and CC2		65	85	µA
$I_{DISABLE}$	Chip is disabled	ENB=VDD	-	-	5	µA
Thermal Shutdown						
T_{OTP}	Thermal shutdown threshold		-	155	-	°C
T_{hys}	Thermal shutdown hysteresis		-	20	-	°C

Note:

1. On-resistance is the voltage drop between the two terminals at the indicated current through the switch.

AC Electrical Characteristics

Min and Max apply for T_A between -40℃ to 85℃ and T_J up to +125℃ (unless otherwise noted). Typical values are referenced to T_A=+25℃, V_{DD}=3.8V.

Symbol	Parameter	Test Conditions	Min.	Typ.	Max.	Units
BW_{USB}	-3dB Differential Bandwidth of USB channel		-	8	-	GHz
I_L	Differential insertion loss	f=5GHz, Vcm=0V	-	-1.9	-	dB
R_L	Differential return loss		-	-11	-	dB
X_{TALK}	Differential crosstalk		-	-30	-	dB
T_{on}	Turn-On Time		-	20	-	µs
T_{off}	Turn-Off Time		-	1	-	µs

Capacitance (T_A = -40°C to 85°C)

Symbol	Parameter	Test Conditions	Min.	Typ.	Max.	Units
C_{ONUSB}	TXn+, TXn- On Capacitance (USB Mode)		-	1.5	-	pF
C_{off}	TXn+, TXn- OFF Capacitance (USB Mode)		-	1	-	pF

I^2C AC Electrical Characteristics

Symbol	Parameter	Fast Mode (400kHz)		Units
		Min.	Max.	
f_{SCL}	SCL Clock Frequency	0	400	kHz
t_{HDSTA}	Hold Time (Repeated) START Condition	0.6	-	µs
t_{LOW}	LOW Period of SCL Clock	1.3	-	µs
t_{HIGH}	HIGH Period of SCL Clock	0.6	-	µs
t_{SETSTA}	Set-up Time for Repeated START Condition	0.6	-	µs
t_{HDDAT}	Data Hold Time	0	0.9	µs
T_{SUDAT}	Data Set-up Time	250	-	ns
t_r	Rise Time of SDA and SCL Signals	-	300	ns
t_f	Fall Time of SDA and SCL Signals	-	300	
t_{SETSTO}	Set-up Time for STOP Condition	0.6	-	µs
t_{BUF}	Bus-Free Time between STOP and START Conditions	1.3	-	µs
t_{SP}	Pulse Width of Spikes that Must Be Suppressed by the Input Filter	0	50	ns

© Diodes Incorporated

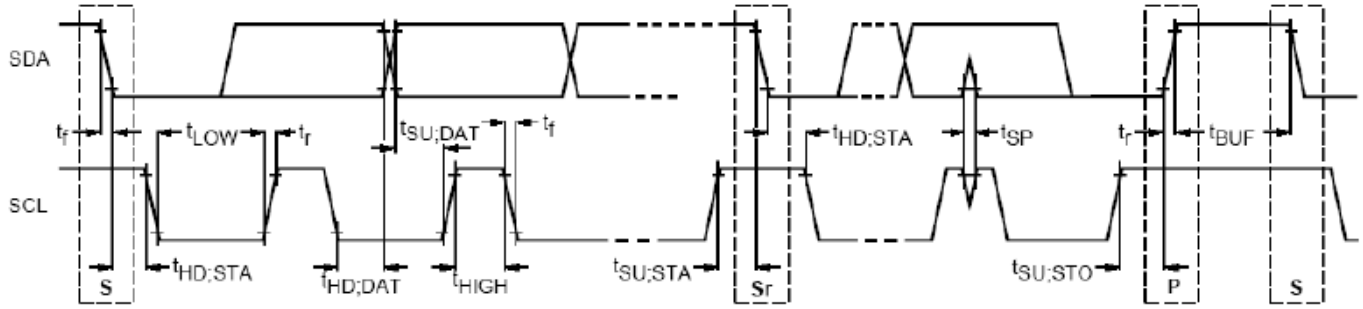

Figure 3. Definition of Timing for Full-Speed Mode Devices on the I²C Bus

Table 1. I²C Slave Address

Name	Size (Bits)	Bit 7	Bit 6	Bit 5	Bit 4	Bit 3	Bit 2	Bit 1	Bit 0
Slave Address(ADDR=1)	8	0	1	0	1	1	0	1	R/W
Slave Address(ADDR=0)		0	0	0	1	1	0	1	R/W

© Diodes Incorporated

I²C Data Transfer

1. Read Sequence

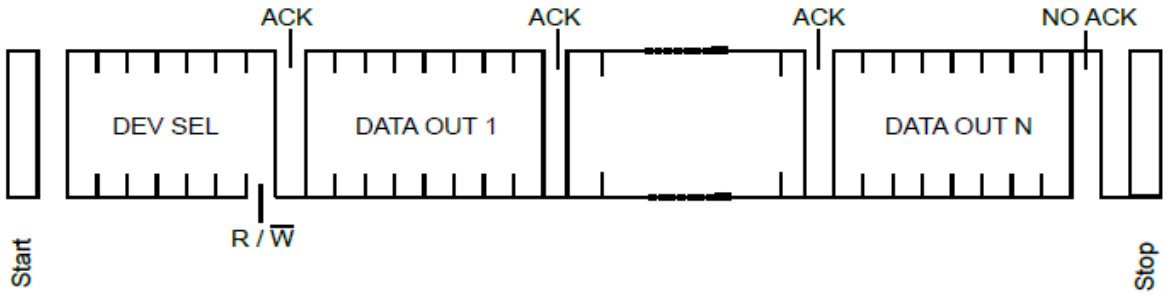

2. Write Sequence

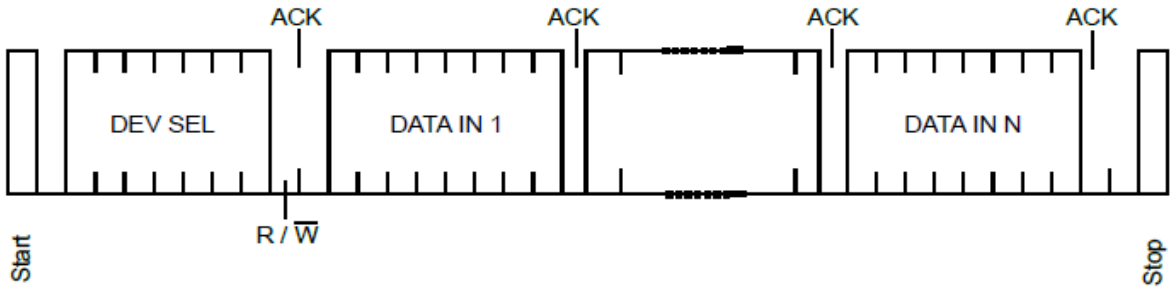

Note:

1. PI5USB31213 does not have offset byte. All registers must be read or written sequentially from 0x00. For example, in order to read address 0x04, PI5USB31213 I2C registers must be read sequentially from 0x01, 0x02, 0x03 to 0x04. In order to write address 0x02, it must be written sequentially from 0x01 to 0x02.

© Diodes Incorporated

Detailed Description

ADDR

ADDR is a tri-level input pin to indicate I2C or pin control (or GPIO) mode. When ADDR pin is floating, the part is set to pin control mode. When ADDR is set to VDD or GND, I2C mode is enabled, and bit 6 of I2C address is equal to 1 or 0 according to ADDR set to VDD or GND (see Table 1: I2C Slave Address).

Configuration

The PI5USB31213 requires minimal configuration for proper detection and reporting. Write register 0x02 (Control Register) to configure different charging profiles and port settings.

Processor Communication

Processor shall use following procedure to process PI5USB31213 interrupt request:

1. INTB asserted LOW, indicating Type-C port status change.
2. Processor first masks PI5USB31213 interrupt by writing a '1' to Bit 0 of Control Register(0x02). INTB returned high.
3. Processor then read Register(0x01), Control Register (0x02), Interrupt Register(0x03) and CC Status Register(0x04). Interrupt Register(0x03) indicates if an attach or detach event was detected. All interrupt flags in Interrupt Register will be cleared after the I2C read action. CC Status Register(0x04) is used to determine plugin details and charging profile. Processor can configure the power and USB channels according to information in CC Status Register.
4. Processor unmask PI5USB31213 interrupt by writing a '0' to Bit 0 of Address 0x02 before ending the interrupt service routine.

Interrupts

The baseband processor recognizes interrupt signals by observing the INTB signal, which is active LOW. Interrupts are masked upon bit 0 of Control Register 0x02 (Interrupt Mask Bit). After the Interrupt Mask Bit is cleared by the baseband processor, the INTB pin is hi-z in preparation for a future interrupt. When an interruptible event occurs, INTB transitions LOW and returns hi-z when the processor reads the Interrupt Register (0x03). Subsequent to the initial power up or reset; if the processor writes a "1" to Interrupt Mask Bit when the system is already powered up, the INTB pin stays hi-z and ignores all interrupts until the Interrupt Mask Bit is cleared.

Besides monitoring the I^2C registers, the system can also monitor ID pin and VBUS for connector status. If the port is configured as a device (or dual-role acting as device), VBUS will go to 5V when host attachment is detected. If the port is configured as a host (or dual-role acting as host), ID pin will pull low when device attachment is detected, and system should assert VBUS.

Port Setting (Host/Device/Dual-Role)

When power is applied to VDD, an internal Power-On Reset (POR) holds the PI5USB31213 in a reset condition until VDD has reached 2.7V. At that point, the reset condition is released and the PI5USB31213 registers and I^2C-bus state machine will initialize to their default states. [2:1] of Control Register (0x02) are initialized according to the PORT pin setting (see Table 3 I^2C Register Table). Type-C connector can be configured as host, device or dual-role port per the register. After power up, the port setting can still be changed by I2C writes to Bits [2:1] of Control Register (0x02). Thereafter, VDD must be lowered below 1.0V to reset the device (both registers and I^2C-bus state machine).

PI5USB31213 connects current sources to CC1 and CC2 when operating in host mode. It will also set the current level according to the charging current setting. In device mode, PI5USB31213 will connect two integrated resistor Rd1 and Rd2 to CC1 and CC2 respectively. Dual-Role mode enables CC1 and CC2 toggle between host mode and device mode alternatively every 50ms. The toggling will stop after connection is made and role negotiated.

Current Mode Setting and Detection

Type-C connector can be configured as different current modes per CC1/CC2 setting. Host mode (or dual role acting as Host) allows the system to configure between high current mode (3A), medium current mode (1.5A) and default current mode. Different current modes can be set by writing control register (x02h). When in Device mode (or dual role acting as device), CC1/CC2 pins allow the system to detect the host charging capability. The charging capability is reported in CC Status Register (0x04) which can help the system configure the charging current accordingly.

© Diodes Incorporated

ID

When PI5USB31213 is configured as host mode (or dual role acting as host), ID pin will be pulled low when a device is attached to the type-C connector. The ID pin will work as interrupt signal to acknowledge system when there is device attachment. It should be noted the ID pin will not be driven low when an audio or debug accessory is detected, and ID pin will always stay hi-z when port is in device mode.

Audio and Debug Accessory

PI5USB31213 can detect Audio or Debug Accessory attachment as per CC1/CC2 setting. This is reported in CC Status Register (0x04) to help system configure Audio Adapter Accessory and Debug Accessory Mode accordingly.

VBUS Detection

PI5USB31213 detects VBUS to determine the attached state when port is a device. A 910kohm +/- 5% is required to connect VBUS of the connector to VBUSDET input pin to protect the IC from the possible high voltage of VBUS during alternative mode.

ENB

ENB is an active low enable input pin. When ENB pin is high, part is in disable and low power state. All outputs, with the exception of CC1, CC2, SCL & SDA are in High-Z state. CC1 and CC2 pins are pulled low with resistors Rd in disable state. I^2C port will also be reset during disable state. SCL & SDA are still functional when the part is disable and ADDR is not floating. I2C port will also reset during every transition (rising or falling edge) of ENB. Connection State will also be reset and forced to be "DISABLED" state. However, disable has no effect on the value of Register 02H (Control).

When ENB pin is low, part is enabled. The connection state will activate and detection will restart.

Dead Battery startup

PI5USB31213 ensures dead battery charging when VDD=0V. Both CC1 and CC2 will be pulled down when VDD=0V. Such configuration helps other host port detect the dead battery port as a device mode port and enable charging through VBUS.

VCONN Power Path at CC1/CC2 Pin

PI5USB31213 offers low-resistance switch path between CC1/CC2 to VCONN pin for powering accessories or active cables. There are over-voltage, over-current and thermal protections online to protect the system from fault connection.

VCONN Fault Condition Trigger and Recover

Over-current protection is online in PI5USB31213 to protect VCONN from being drawn a continuous current exceeding 700mA. Graph below further describes the characteristic of the over-current protection scheme. If the voltage at CC1/CC2 is lower than ~1.8V, the current limit will further be reduced down to 200mA. When the current limit is hit (OCP event), PI5USB31213 pulls low INTB pin to acknowledge the processor a fault condition happened.

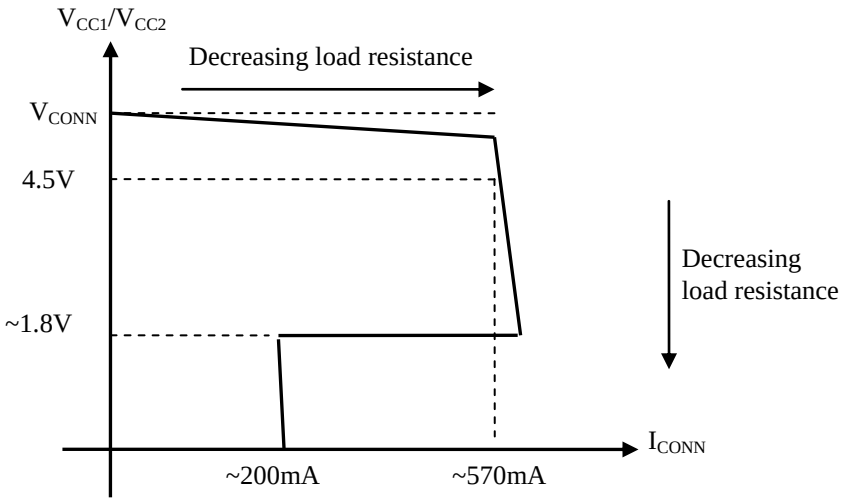

Figure 4. Output Voltage vs. Current Limit Threshold

© Diodes Incorporated

Power Delivery Communication

USB Power Delivery is a feature on the USB Type-C connector. When *USB PD* is implemented, *USB PD* Bi-phase Mark Coded (BMC) carried on the CC wire shall be used for *USB PD* communications between USB Type-C ports.

At attach, V_{BUS} shall be operationally stable prior to initiating *USB PD* communications. As a UFP may wait for 200msec to establish a successful connection after VBUS is detected. USB PD communications from DFP should be initiated at least 200msec after VBUS is turned on and stable. Otherwise, the connection may not be successfully established until USB PD communication is finished.

© Diodes Incorporated

Pin Control Functional Description

Type-C connector port setting (PORT)

Type-C connector can be configured as different ports by changing PORT pin voltage level.

Table 2A. Port Setting

Port setting	PORT
Device (SNK)	GND
Dual-role port (DRP) with Try.SNK	No Connection
Host (SRC)	VDD

Type-C connector current mode detection (OUT1, OUT2)

Type-C connector can detect different host current modes and other accessories per CC1/CC2 setting. When PI5USB31213 operates in device mode (or dual role mode acting as device), it detects CC1/CC2 status to determine host charging current modes and reports to the system using OUT1 and OUT2 pins. OUT1 and OUT2 will always stay hi-z unless medium or high current mode is detected.

Table 2B. Current Mode Detection

	OUT2	OUT1
Default current mode	Hi-Z	Hi-Z
Medium current mode (1.5A)	Hi-Z	Low
High current mode (3A)	Low	Low

Type-C Connector current mode setting in host mode

When PI5USB31213 is configured as a host, the current mode can only be set to Default Current Mode(current source Ip=80uA). I2C control is required to set current mode to 1.5A or 3A.

Audio Adapter Accessory Detection (OUT3)

PI5USB31213 detects analog audio adapter attachment as per CC1/CC2 setting. This is reported by the OUT3 pin. OUT3 will be pulled low when an analog audio adapter attachment is detected. Otherwise, OUT3 will stay hi-z.

Table 2C. Audio Adapter Accessory Detection

Audio Accessory	OUT3
Detected	Low
Not Detected	Hi-Z

ADDR, ID, ENB, and Dead Battery Startup

Functionality of the ADDR, ID, and ENB pins are the same for pin control or I2C control modes. Dead Battery Startup operation is also the same for pin control and I2C control modes. Please refer to previous section for detail description.

© Diodes Incorporated

Table 3. I²C Register

Address	Name	Description	Default Value	Type
0x01	Device ID	Bits [7:3] = Version ID 00001 = Product version Bits [2:0] = Vendor ID(Pericom) 000 = Pericom	08h	R
0x02	Control	Bit 7 = Powersaving 0 = Enable/Active state 1 = Disable and low power state In Disable and low power state, all outputs of PI5USB31213, with the exception of CC1 and CC2 pins, are in High-Z State. CC1 and CC2 pins are pulled low with resistor Rd. Bits [6] = Dual role 2 Try.SRC or Try.SNK setting 0 = Enable Try.SRC supported 1 = Enable Try.SNC supported Bits [5] = Accessory Detection in Device Mode 0 = Disable 1 = Enable Bits [4:3] = Charging current mode System can set the charging current mode when port is a host or dual role acting as host. These bits are ignored when port is a device or dual role acting as device. 00 = Default current mode 01 = Medium current mode (1.5A) 10 = High current mode (3A) Bits [2:1] = Port setting System can set the role of the port. 00 = Device (SNK) 01 = Host (SRC) 10 = Dual Role (DRP) 11 = Dual Role 2 (DRP) where Try.SRC or Try.SNC is supported Bit 0 = Interrupt Mask INTB pin is used to acknowledge system if there is any interrupt events triggered. When this bit is set to 0, INTB pin is pulled low when an interrupt event occur. When this bit is set to 1, INTB pin ignores all interrupt and remain High-Z. 0 = Do not mask interrupt 1 = Mask interrupt	00h Upon power-up, Bits [2:1] are initialized according to PORT pin setting as follows: PORT pin initial settins / Bits [2:1] GND / 00 VDD / 01 Float / 10 Note: This initialization only happens once when PI5USB31213 is powered up. Bits [2:1] can be changed by I²C command afterwards.	R/W
0x03	Interrupt	Bit 7 = Fault condition recovery This bit indicates if VCONN recover from fault conditions including OCP, OVP, OTP 0 = Fault event not recovered 1 = Fault event recovered Bit 6 = OCP event VCONN over-current protection indicator 0 = No OCP event 1 = OCP event detected	00h	Clearable read only. Bits[7:0] are cleared when Byte 3 is read.

© Diodes Incorporated

Address	Name	Description	Default Value	Type
0x03	Interrupt	Bit 5 = OVP event VCONN over-voltage protection indicator 0 = No OVP event 1 = OVP event detected Bit 4 = = Reserved. Read 0's. Bit 3 = OTP event VCONN over-temperature protection indicator 0 = No OTP event 1 = OTP event detected Bit 2 = Fault Ocurring. 0 = No fault is occurring 1 = Fault(s) is occurring *This bit will be set or clear per real time condition. And won't be cleared by I2C reading. No interrupt will be reported by the change of this bit. Bit 1 = Detach event When this bit is set to 1, it indicates the unplug action. The port changes from attached state (Attached.SNK, Attached.SRC, AudioAccessory or DebugAccessory state) to unattached state. Bit 0 = Attach event When this bit is set to 1, it indicates the plug action. The port changes from unattached state to attached state.		
0x04	CC status	Bit 7 = VBUS detection This bit reports VBUS status when PI5USB31213 is in device mode, dual role mode acting as device or accessory mode. 0 = VBUS not detected 1 = VBUS detected Bits [6:5] = Charging current detection These bits report the detected host charging current status when port is a device or dual role acting as device. 00 = Standby 01 = Default current mode 10 = Medium current mode (1.5A) 11 = High current mode (3A) Bits [4:2] = Attached port status 000 = Standby 001 = Device 010 = Host 011 = Audio Adapter Accessory 100 = Debug Accessory Bits [1:0] = Plug polarity 00 = Standby 01 = CC1 makes connection 10 = CC2 makes connection 11 = Undetermined (e.g. AudioAccessory, DebugAccessory or other undetermined connections)	00h	R

© Diodes Incorporated

Register Table

Address	Register	Type	Reset Value	Bit 7	Bit 6	Bit 5	Bit 4	Bit 3	Bit 2	Bit 1	Bit 0
01H	Device ID	Read	00001000	Version ID : 00001					Vendor ID(Pericom): 000		
02H	Control	Read/ Write	00000000	Powersaving	Dual-role 2	Accessory Detection in Device Mode	Charging Current mode (Host/Dual-role)		Port setting		Interrupt Mask
				0: No Powersaving 1: Powersaving	0: Try.SRC supported 1: Try.SNK supported	0: Disable 1: Enable	00: Default 01: Medium 10: High		00: Device 01: Host 10: Dual-role 11: Dual-role 2		0: Does not Mask Interrupts 1: Mask Interrupts
03H	Interrupt	Read/ Clear	00000000	Fault Recovery	OCP Event	OVP Event	reserved	OTP Event	Fault Occurring*	Detach	Attach
				0: fault event not recovered	0: No OCP event	0: No OVP event		0: No OTP event	0: No fault is occurring	0: No Interrupt	
				1: fault event recovered	1: OCP event	1: OVP event		1: OTP event	1: Fault(s) is occurring	1: detached	1: attached
04H	CC status	Read	00000000	VBUS detection (Port is a Device or in Accessory Mode)	Charging current detection (Port is a Device)		Attached Port Status			Plug polarity	
				0: Vbus not detected 1: Vbus detected	00: Standby 01: Default 10: Medium 11: High		000: Standby 001: Device 010: Host 011: Audio 100: Debug Accessory			00: Standby 01: CC1 connected 10: CC2 connected 11: undetermined	

***This bit will be set or clear per real time condition. And won't be cleared by I2C reading. No interrupt will be reported by the change of this bit.**

Upon power-up, Bit 1 and Bit 2 of register 02H are initialized according to the pin #3 PORT setting as follows:

Pin #3 Port Initial Connection	Bit 2 & Bit 1 of Register 02H initialization
PORT pin is floating – Dual role;	10
PORT pin =VDD – Host;	01
PORT pin =GND – Device	00

This initialization only happens once when PI5USB31213 is powered up. Bit 1 and Bit 2 of register 02H can be changed by I2C commands afterwards.

© Diodes Incorporated

Connection State Diagram: SRC

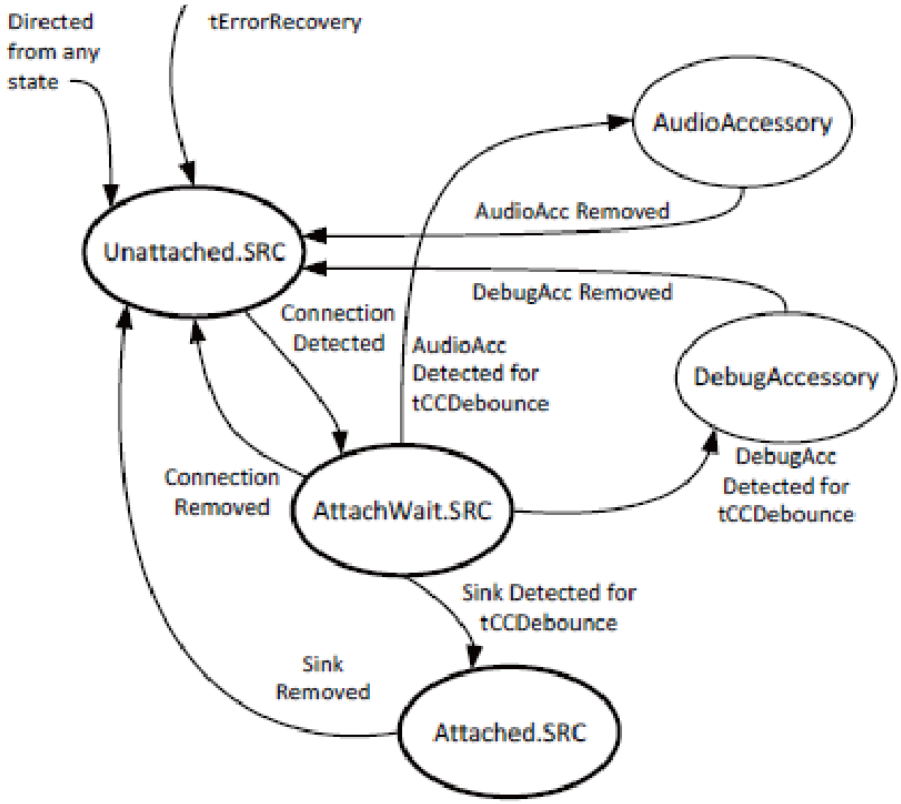

© Diodes Incorporated

Connection State Diagram: SNK

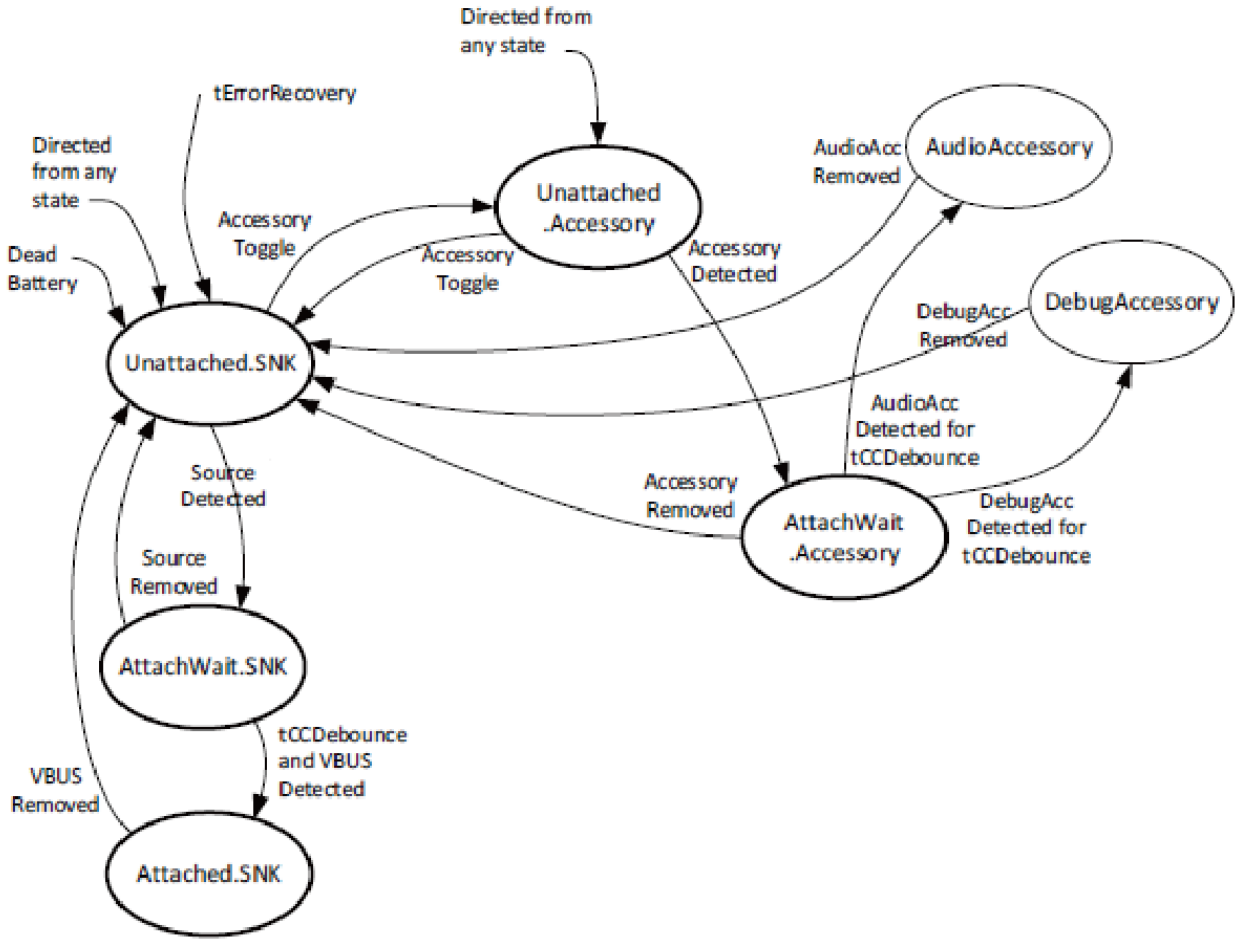

© Diodes Incorporated

Connection State Diagram: DRP

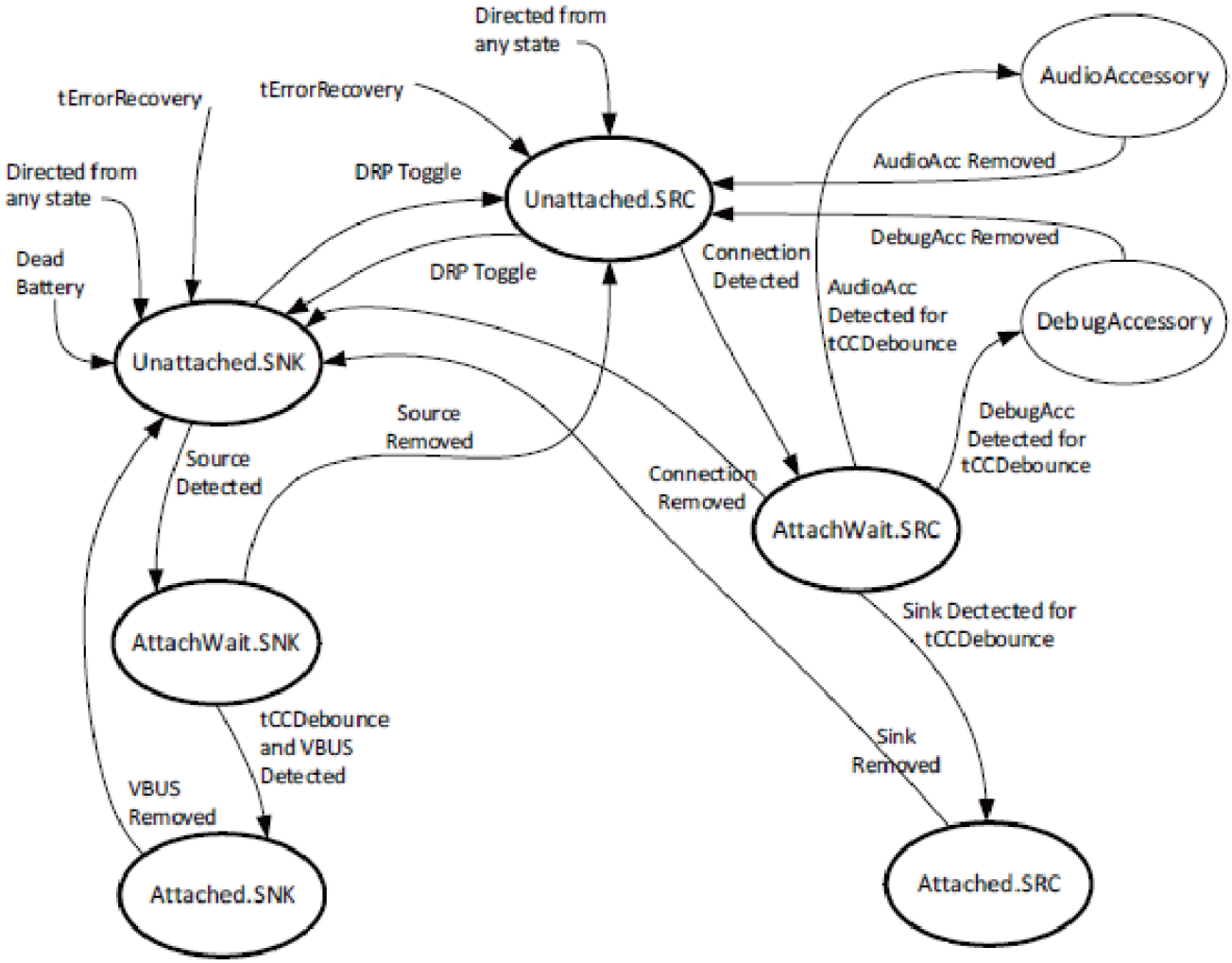

© Diodes Incorporated

Connection State Diagram: DRP with Try.SRC Supported

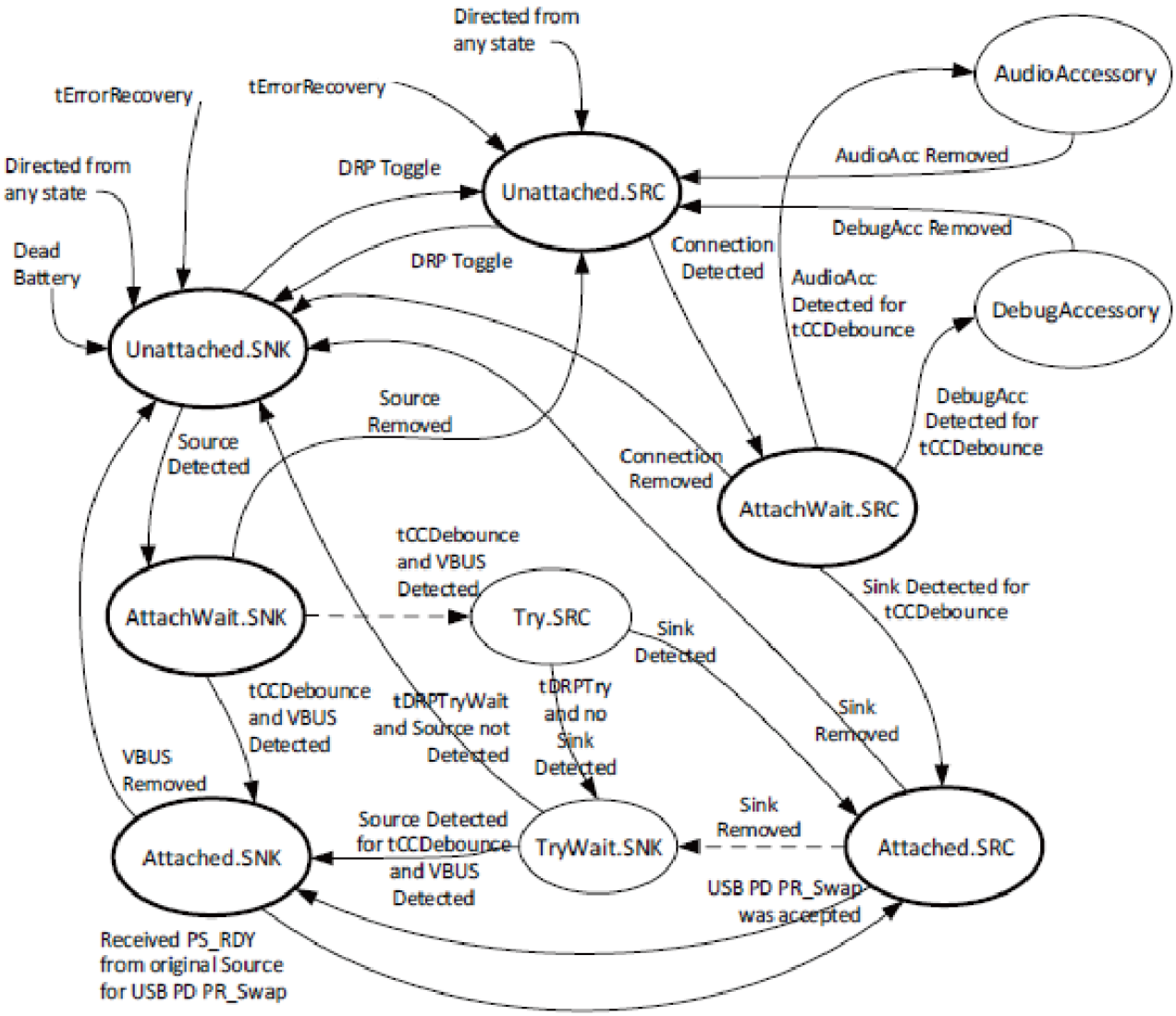

© Diodes Incorporated

Connection State Diagram: DRP with Try.SNK Supported

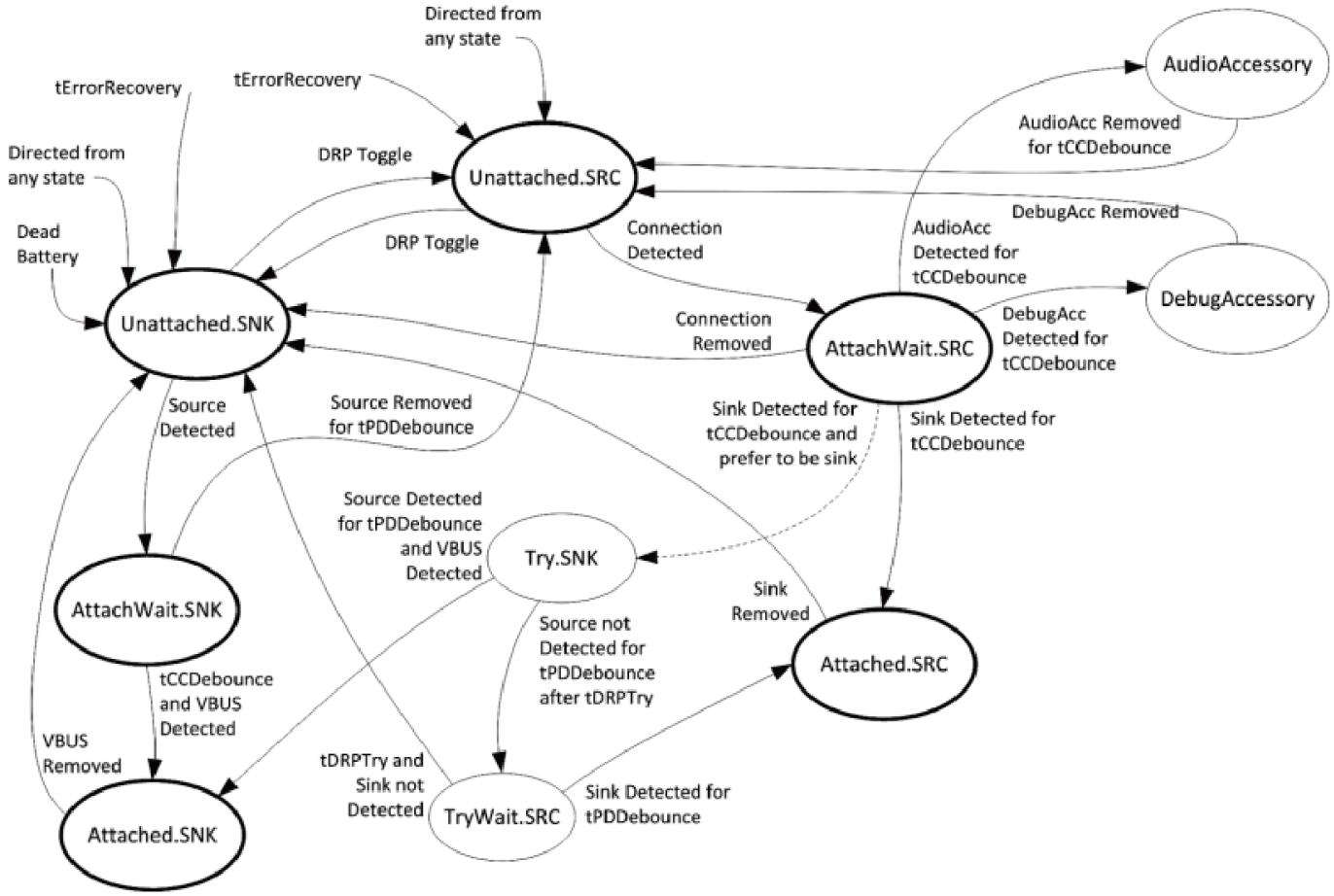

© Diodes Incorporated

Packaging Mechanical

TQFN 2 X 4 -24 Contact (X1QFN)

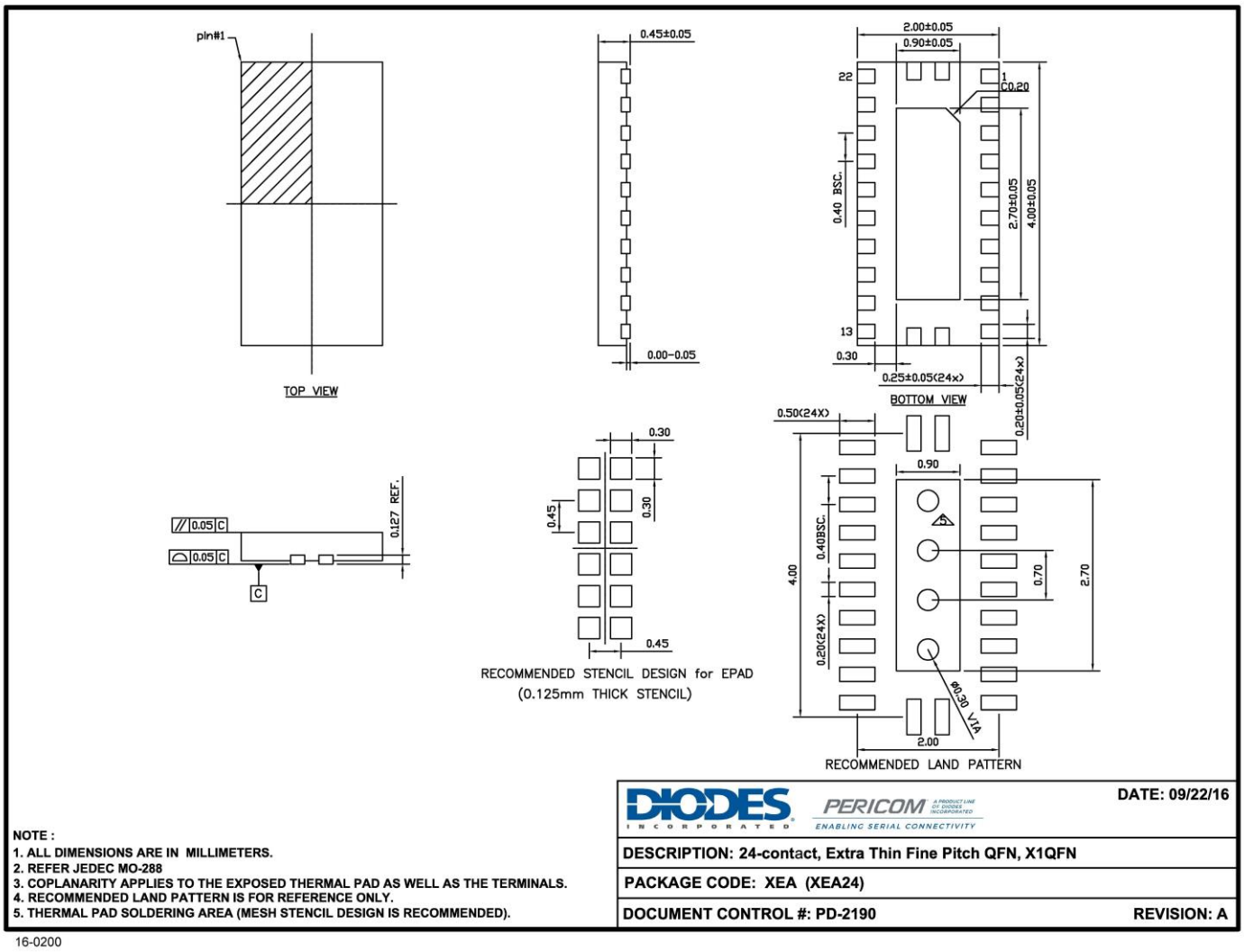

16-0200

For latest package info.

please check: http://www.diodes.com/design/support/packaging/pericom-packaging/packaging-mechanicals-and-thermal-characteristics/

Ordering Information[1,2,3]

Ordering Number	Package Code	Package Description
PI5USB31213XEAEX	XEA	24-contact, Extra Thin Fine Pitch QFN (X1QFN)

Notes:

- Thermal characteristics can be found on the company web site at www.diodes.com/design/support/packaging/
- E = Pb-free and Green
- X suffix = Tape/Reel

© Diodes Incorporated

IMPORTANT NOTICE

DIODES INCORPORATED MAKES NO WARRANTY OF ANY KIND, EXPRESS OR IMPLIED, WITH REGARDS TO THIS DOCUMENT, INCLUDING, BUT NOT LIMITED TO, THE IMPLIED WARRANTIES OF MERCHANTABILITY AND FITNESS FOR A PARTICULAR PURPOSE (AND THEIR EQUIVALENTS UNDER THE LAWS OF ANY JURISDICTION).

Diodes Incorporated and its subsidiaries reserve the right to make modifications, enhancements, improvements, corrections or other changes without further notice to this document and any product described herein. Diodes Incorporated does not assume any liability arising out of the application or use of this document or any product described herein; neither does Diodes Incorporated convey any license under its patent or trademark rights, nor the rights of others. Any Customer or user of this document or products described herein in such applications shall assume all risks of such use and will agree to hold Diodes Incorporated and all the companies whose products are represented on Diodes Incorporated website, harmless against all damages.

Diodes Incorporated does not warrant or accept any liability whatsoever in respect of any products purchased through unauthorized sales channel.

Should Customers purchase or use Diodes Incorporated products for any unintended or unauthorized application, Customers shall indemnify and hold Diodes Incorporated and its representatives harmless against all claims, damages, expenses, and attorney fees arising out of, directly or indirectly, any claim of personal injury or death associated with such unintended or unauthorized application.

Products described herein may be covered by one or more United States, international or foreign patents pending. Product names and markings noted herein may also be covered by one or more United States, international or foreign trademarks.

This document is written in English but may be translated into multiple languages for reference. Only the English version of this document is the final and determinative format released by Diodes Incorporated.

LIFE SUPPORT

Diodes Incorporated products are specifically not authorized for use as critical components in life support devices or systems without the express written approval of the Chief Executive Officer of Diodes Incorporated. As used herein:

A. Life support devices or systems are devices or systems which:

1. are intended to implant into the body, or

2. support or sustain life and whose failure to perform when properly used in accordance with instructions for use provided in the labeling can be reasonably expected to result in significant injury to the user.

B. A critical component is any component in a life support device or system whose failure to perform can be reasonably expected to cause the failure of the life support device or to affect its safety or effectiveness.

Customers represent that they have all necessary expertise in the safety and regulatory ramifications of their life support devices or systems, and acknowledge and agree that they are solely responsible for all legal, regulatory and safety-related requirements concerning their products and any use of Diodes Incorporated products in such safety-critical, life support devices or systems, notwithstanding any devices- or systems-related information or support that may be provided by Diodes Incorporated. Further, Customers must fully indemnify Diodes Incorporated and its representatives against any damages arising out of the use of Diodes Incorporated products in such safety-critical, life support devices or systems.

Copyright © 2016, Diodes Incorporated
www.diodes.com

Looking for pricing, stock, or lifecycle information?

Click below to explore more details on WIN SOURCE:

- View PI5USB31213XEAEX on WIN SOURCE
- Diodes Incorporated Information

Optimize Your Supply Chain with WIN SOURCE Solutions

- Global Sourcing Solution
- Obsolete Management
- Cost Control Management
- Shortage Management
- Alternative Solution
- Excess Inventory Management