THE DATASHEET OF

CY24271ZXC

www.win-source.net 0086-755-83957316

CY24271

Rambus® XDR™ Clock Generator

Features

- Meets Rambus® Extended Data Rate (XDR™) clocking requirements
- 25 ps typical cycle-to-cycle jitter
  - 135 dBc/Hz typical phase noise at 20 MHz offset
- 100 or 133 MHz differential clock input
- 300–800 MHz high speed clock support
- Quad (open drain) differential output drivers
- Supports frequency multipliers: 3, 4, 5, 6, 8, 9/2, 15/2, and 15/4
- Spread Aware™
- 2.5 V operation
- 28-pin TSSOP package

Functional Description

For a complete list of related documentation, click here.

Logic Block Diagram

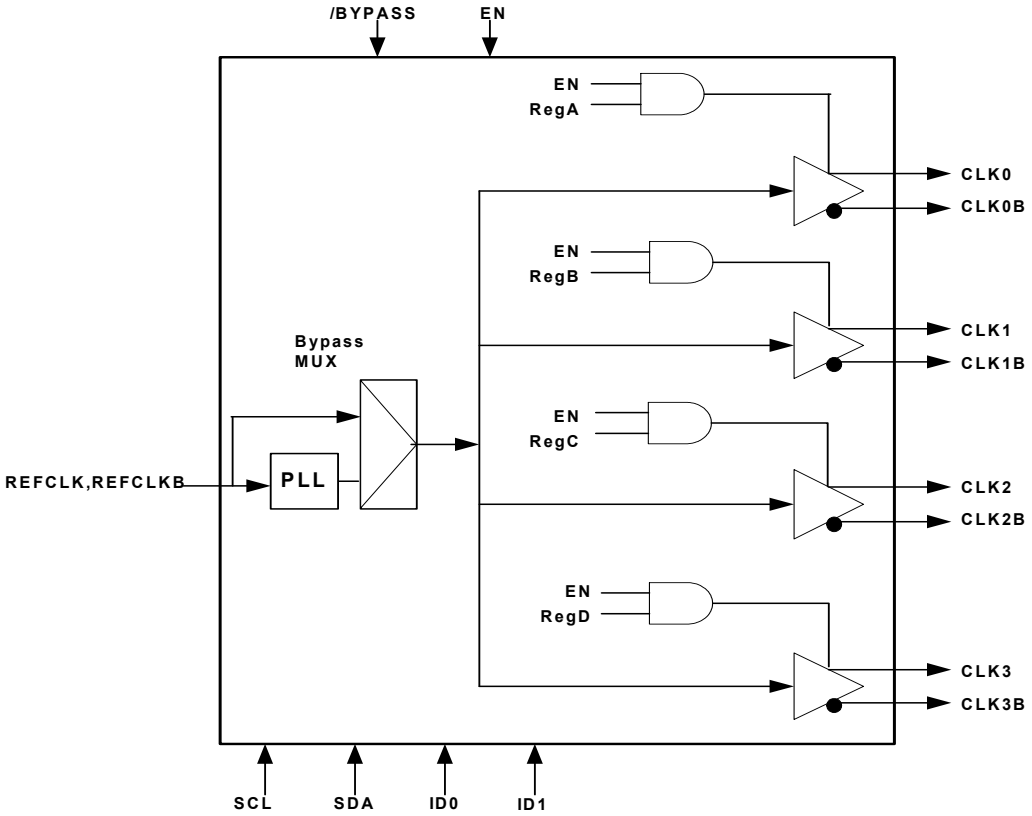

Contents

Pinouts **3**
Pin Definitions **3**
Functional Overview **4**
PLL Multiplier 4
Device ID and SMBus Device Address 4
Modes of Operation 5
SMBus Protocol 6
Input Clock Signal 6
SMBus Data Byte Definitions 6
Absolute Maximum Conditions **8**
DC Operating Conditions **8**
DC Electrical Specifications **9**
Thermal Resistance **9**
AC Operating Conditions **10**
AC Electrical Specifications **11**
Test and Measurement Setup **12**
Signal Waveforms **13**
Jitter **14**
Ordering Information **15**
Ordering Code Definitions 15
Package Drawing and Dimension **16**
Acronyms **17**
Document Conventions **17**
Units of Measure 17
Document History Page **18**
Sales, Solutions, and Legal Information **19**
Worldwide Sales and Design Support 19
Products 19
PSoC® Solutions 19
Cypress Developer Community 19
Technical Support 19

Pinouts

Figure 1. 28-pin TSSOP pinout

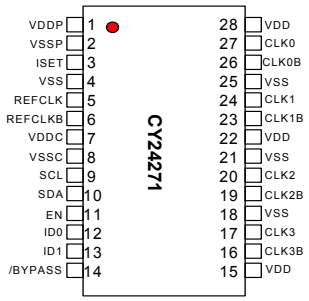

Pin Definitions

28-pin TSSOP

Pin No.	Name	I/O	Description
1	VDDP	PWR	2.5 V power supply for phased lock loop (PLL)
2	VSSP	GND	Ground
3	ISET	I	Set clock driver current (external resistor)
4	VSS	GND	Ground
5	REFCLK	I	Reference clock input (connect to clock source)
6	REFCLKB	I	Complement of reference clock (connect to clock source)
7	VDDC	PWR	2.5 V power supply for core
8	VSSC	GND	Ground
9	SCL	I	SMBus clock (connect to smbus)
10	SDA	I	SMBus data (connect to smbus)
11	EN	I	Output Enable (CMOS signal)
12	ID0	I	Device ID (CMOS signal)
13	ID1	I	Device ID (CMOS signal)
14	/BYPASS	I	REFCLK bypassing PLL (CMOS signal)
15	VDD	PWR	Power supply for outputs
16	CLK3B	O	Complement clock output
17	CLK3	O	Clock output
18	VSS	GND	Ground
19	CLK2B	O	Complement clock output
20	CLK2	O	Clock output
21	VSS	GND	Ground
22	VDD	PWR	Power supply for outputs
23	CLK1B	O	Complement clock output
24	CLK1	O	Clock output
25	VSS	GND	Ground

Pin Definitions *(continued)*

28-pin TSSOP

Pin No.	Name	I/O	Description
26	CLK0B	O	Complement clock output
27	CLK0	O	Clock output
28	VDD	PWR	Power supply for outputs

Functional Overview

PLL Multiplier

Table 1 shows the frequency multipliers in the PLL, selectable by programming the SMBus registers MULT0, MULT1, and MULT2. Default multiplier at power up is 4.

Table 1. PLL Multiplier Selection

Register			Frequency Multiplier	Output Frequency (MHz)	
MULT2	MULT1	MULT0		REFCLK = 100 MHz[1], REFSEL = 0	REFCLK = 133 MHz[1], REFSEL = 1
0	0	0	3	300	400
0	0	1	4	400[2]	533[3]
0	1	0	5	500	667
0	1	1	6	600	800
1	0	0	8	800	1067[3]
1	0	1	9/2	450	600
1	1	0	15/2	750	1000[3]
1	1	1	15/4	375	500

Device ID and SMBus Device Address

The device ID (ID0 and ID1) is a part of the SMBus device 8-bit address. The least significant bit of the address designates a write or read operation. Table 2 shows the addresses for four CY24271 devices on the same SMBus.

Table 2. SMBus Device Addresses for CY24271

XCG		Hex Address	8-bit SMBus Device Address Including Operation							
Device	Operation		Five Most Significant Bits					ID1	ID0	WR# / RD
0	Write	D8	1	1	0	1	1	0	0	0
	Read	D9								1
1	Write	DA						0	1	0
	Read	DB								1
2	Write	DC						1	0	0
	Read	DD								1
3	Write	DE						1	1	0
	Read	DF								1

Notes
1. Output frequencies shown in Table 1 are based on nominal input frequencies of 100 MHz and 133.3 MHz. The PLL multipliers are applicable to spread spectrum modulated input clock with maximum and minimum input cycle time. The REFSEL bit in SMBus 81h is set correctly as shown.
2. Default PLL multiplier at power up.
3. Contact the factory if operation at these frequencies is required.

Modes of Operation

The modes of operation are determined by the logic signals applied to the EN and /BYPASS pins and the values in the five SMBus Registers: RegTest, RegA, RegB, RegC, and RegD. Table 3 shows selection from one to all four of the outputs, the Outputs Disabled Mode (EN = low), and Bypass Mode (EN = high, /BYPASS = low). There is an option reserved for vendor test. Disabled outputs are set to High Z.

At power up, the SMBus registers default to the last entry in Table 3. The value at RegTest is 0. The values at RegA, RegB, RegC, and RegD are all '1'. Thus, all outputs are controlled by the logic applied to EN and /or BYPASS.

Table 3. Modes of Operation for CY24271

EN	/BYPASS	RegTest	RegA	RegB	RegC	RegD	CLK0/CLK0B	CLK1/CLK1B	CLK2/CLK2B	CLK3/CLK3B
L	X	X	X	X	X	X	High Z	High Z	High Z	High Z
H	X	1	X	X	X	X	Reserved for Vendor Test			
H	L	0	X	X	X	X	REFCLK/ REFCLKB[4]	REFCLK/ REFCLKB	REFCLK/ REFCLKB	REFCLK/ REFCLKB
H	H	0	0	0	0	0	High Z	High Z	High Z	High Z
H	H	0	0	0	0	1	High Z	High Z	High Z	CLK/CLKB
H	H	0	0	0	1	0	High Z	High Z	CLK/CLKB	High Z
H	H	0	0	0	1	1	High Z	High Z	CLK/CLKB	CLK/CLKB
H	H	0	0	1	0	0	High Z	CLK/CLKB	High Z	High Z
H	H	0	0	1	0	1	High Z	CLK/CLKB	High Z	CLK/CLKB
H	H	0	0	1	1	0	High Z	CLK/CLKB	CLK/CLKB	High Z
H	H	0	0	1	1	1	High Z	CLK/CLKB	CLK/CLKB	CLK/CLKB
H	H	0	1	0	0	0	CLK/CLKB	High Z	High Z	High Z
H	H	0	1	0	0	1	CLK/CLKB	High Z	High Z	CLK/CLKB
H	H	0	1	0	1	0	CLK/CLKB	High Z	CLK/CLKB	High Z
H	H	0	1	0	1	1	CLK/CLKB	High Z	CLK/CLKB	CLK/CLKB
H	H	0	1	1	0	0	CLK/CLKB	CLK/CLKB	High Z	High Z
H	H	0	1	1	0	1	CLK/CLKB	CLK/CLKB	High Z	CLK/CLKB
H	H	0	1	1	1	0	CLK/CLKB	CLK/CLKB	CLK/CLKB	High Z
H	H	0[5]	1[5]	1[5]	1[5]	1[5]	CLK/CLKB	CLK/CLKB	CLK/CLKB	CLK/CLKB

Notes
4. Bypass Mode: REFCLK bypasses the PLL to the output drivers.
5. Default mode of operation is at power up.

SMBus Protocol

The CY24271 is a slave receiver supporting operations in the word and byte modes described in sections 5.5.4 and 5.5.5 of the SMBus Specification 2.0.

DC specifications are modified to RAMBUS standard to support 1.8, 2.5, and 3.3 volt devices. Time-out detection and packet error protocol SMBus features are not supported.

Input Clock Signal

The XCG receives either a differential (REFCLK/REFCLKB) or a single-ended reference clocking input (REFCLK).

When the reference input clock is from a different clock source, it must meet the voltage levels and timing requirements listed in DC Operating Conditions on page 8 and AC Operating Conditions on page 10.

For a single-ended clock input, an external voltage divider and a supply voltage, as shown in Figure 2 on page 7, provide a reference voltage V_{TH} at the REFCLKB pin. This determines the proper trip point of REFCLK. For the range of V_{TH} specified in DC Operating Conditions on page 8, the outputs also meet the DC and AC Operating Conditions tables.

SMBus Data Byte Definitions

Three data bytes are defined for the CY24271. Byte 0 is for programming the PLL multiplier registers and clock output registers.

The definition of Byte 2 is shown in Table 4, Table 5, and Table 6 on page 7. The upper five bits are the revision numbers of the device and the lower three bits are the ID numbers assigned to the vendor by Rambus.

Table 4. Command Code 80h [6]

Bit	Register	POD	Type	Description
7	Reserved	0	RW	Reserved (no internal function)
6	MULT2	0	RW	PLL Multiplier Select
5	MULT1	0	RW	
4	MULT0	1	RW	
3	RegA	1	RW	Clock 0 Output Select
2	RegB	1	RW	Clock 1 Output Select
1	RegC	1	RW	Clock 2 Output Select
0	RegD	1	RW	Clock 3 Output Select

Table 5. Command Code 81h [6]

Bit	Register	POD	Type	Description
7	Reserved	0	RW	Reserved (no internal function)
6	Reserved	0	RW	
5	Reserved	0	RW	
4	Reserved	0	RW	
3	Reserved	1	RW	Reserved (must be set to ‘1’ for proper operation)
2	REFSEL	0	RW	Reference Frequency Select (reference Table 1 on page 4)
1	Reserved	0	RW	Reserved (must be set to ‘0’ for proper operation)
0	RegTest	0	RW	Reserved (must be set to ‘0’ for proper operation)

Note
6. RW = Read and Write, RO = Read Only, POD = Power on default. See Table 1 on page 4 for PLL multipliers and Table 3 on page 5 for clock output selections.

Table 6. Command Code 82h [7]

Bit	Register	POD	Type	Description
7	Device Revision Number	?	RO	Contact factory for Device Revision Number information.
6		?	RO	
5		?	RO	
4		?	RO	
3		?	RO	
2	Vendor ID	0	RO	RAMBUS assigned Vendor ID Code
1		1	RO	
0		0	RO	

Figure 2. Differential and Single-Ended Clock Inputs

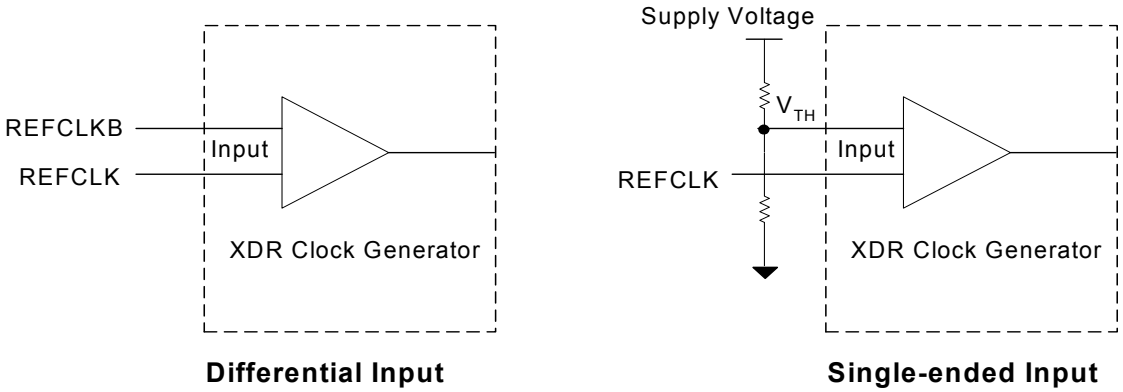

Note
7. RW = Read and Write, RO = Read Only, POD = Power on default. See Table 1 on page 4 for PLL multipliers and Table 3 on page 5 for clock output selections.

Absolute Maximum Conditions

Parameter	Description	Condition	Min	Max	Unit
V_{DD}	Clock Buffer Supply Voltage		–0.5	4.6	V
V_{DDC}	Core Supply Voltage		–0.5	4.6	V
V_{DDP}	PLL Supply Voltage		–0.5	4.6	V
V_{IN}	Input Voltage (SCL and SDA)	Relative to V_{SS}	–0.5	4.6	V
	Input Voltage (REFCLK/REFCLKB)	Relative to V_{SS}	–0.5	V_{DD} + 1.0	V
	Input Voltage	Relative to V_{SS}	–0.5	V_{DD} + 0.5	V
T_S	Temperature, Storage	Non-functional	–65	150	°C
T_A	Temperature, Operating Ambient	Functional	0	70	°C
T_J	Temperature, Junction	Functional	–	150	°C
ESD_{HBM}	ESD Protection (Human Body Model)	MIL-STD-883, Method 3015	2000	–	V

DC Operating Conditions

Parameter	Description	Condition	Min	Max	Unit
V_{DDP}	Supply Voltage for PLL	2.5 V ± 5%	2.375	2.625	V
V_{DDC}	Supply Voltage for Core	2.5 V ± 5%	2.375	2.625	V
V_{DD}	Supply Voltage for Clock Buffers	2.5 V ± 5%	2.375	2.625	V
V_{IHCLK}	Input High Voltage, REFCLK/REFCLKB		0.6	0.95	V
V_{ILCLK}	Input Low Voltage, REFCLK/REFCLKB		–0.15	+0.15	V
V_{IXCLK}[8]	Crossing Point Voltage, REFCLK/REFCLKB		200	550	mV
ΔV_{IXCLK}[8]	Difference in Crossing Point Voltage, REFCLK/REFCLKB		–	150	mV
V_{IH}	Input Signal High Voltage at ID0, ID1, EN, and /BYPASS		1.4	2.625	V
V_{IL}	Input Signal Low Voltage at ID0, ID1, EN, and /BYPASS		–0.15	0.8	V
$V_{IH,SM}$	Input Signal High Voltage at SCL and SDA[9]		1.4	3.465	V
$V_{IL,SM}$	Input Signal Low Voltage at SCL and SDA		–0.15	0.8	V
V_{TH}[10]	Input Threshold Voltage for single-ended REFCLK		0.35	0.5 × V_{DD}	V
$V_{IH,SE}$	Input Signal High Voltage for single-ended REFCLK		V_{TH} + 0.3	2.625	V
$V_{IL,SE}$	Input Signal Low Voltage for single-ended REFCLK		–0.15	V_{TH} – 0.3	V
T_A	Ambient Operating Temperature		0	70	°C

Notes
8. Not 100% tested except V_{IXCLK} and ΔV_{IXCLK}. Parameters guaranteed by design and characterizations, not 100% tested in production.
9. This range of SCL and SDA input high voltage enables the 3.3 V, 2.5 V, or 1.8 V SMBus voltages to use CY24271.
10. Single-ended operation guaranteed only when $0.8 < (V_{IH,SE} – V_{TH})/(V_{TH} – V_{IL,SE}) < 1.2$.

DC Electrical Specifications

Parameter	Description	Min	Typ	Max	Unit
V_{OX}[11]	Differential output crossing point voltage[12]	0.9	1.0	1.1	V
V_{COS}[11]	Output voltage swing (peak-to-peak single-ended)[13]	300	325	350	mV
$V_{OL,ABS}$	Absolute output low voltage at CLK[3:0], CLK[3:0]B[14]	0.85	–	–	V
V_{ISET}	Reference voltage for swing controlled current, I_{REF}	0.98	1.0	1.02	V
I_{DD}[11]	Power Supply Current at 2.625 V, f_{ref} = 100 MHz, and f_{out} = 300 MHz	–	–	85	mA
I_{DD}[11]	Power Supply Current at 2.625 V, f_{ref} = 133 MHz, and f_{out} = 667 MHz	–	–	125	mA
I_{DD}[11]	Power Supply Current at 2.625 V, f_{ref} = 133 MHz, and f_{out} = 800 MHz	–	–	130	mA
I_{OL}/I_{REF}	Ratio of output low current to reference current[15]	6.8	7.0	7.2	
$I_{OL,ABS}$	Minimum current at $V_{OL,ABS}$[16]	45	–	–	mA
$V_{OL,SDA}$	SDA output low voltage at test condition of SDA output low current = 4 mA	–	–	0.4	V
$I_{OL,SDA}$	SDA output low voltage at test condition of SDA voltage = 0.8 V	6	–	–	mA
I_{OZ}	Current during High Z per pin at CLK[3:0], CLK[3:0]B	–	–	10	µA
Z_{OUT}	Output dynamic impedance when clock output signal is at V_{OL} = 0.9 V [17]	1000	–	–	Ω

Thermal Resistance

Parameter [18]	Description	Test Conditions	28-pin TSSOP	Unit
θ_{JA}	Thermal resistance (junction to ambient)	Test conditions follow standard test methods and procedures for measuring thermal impedance, in accordance with EIA/JESD51.	78	°C/W
θ_{JC}	Thermal resistance (junction to case)		17	°C/W

Notes
11. Not 100% tested except V_{IXCLK} and ΔV_{IXCLK}. Parameters guaranteed by design and characterizations, not 100% tested in production.
12. V_{OX} is measured on external divider network.
13. V_{COS} = (clock output high voltage – clock output low voltage), measured on the external divider network.
14. V_{OL_ABS} is measured at the clock output pins of the package.
15. I_{REF} is equal to V_{ISET}/R_{RC}.
16. Minimum $I_{OL,ABS}$ is measured at the clock output pin with R_{RC} = 148 ohms or less.
17. Z_{OUT} is defined at the output pins as (0.94 V – 0.90 V)/($I_{0.94}$ – $I_{0.90}$) under conditions specified for $I_{OL, ABS}$.
18. These parameters are guaranteed by design and are not tested.

AC Operating Conditions

The AC operating conditions follow.

Parameter [19]	Description	Condition	Min	Max	Unit
$t_{CYCLE,IN}$	REFCLK, REFCLKB input cycle time	REFSEL = 0, /BYPASS = High	9	11	ns
		REFSEL = 1, /BYPASS = High	7	8	ns
		/BYPASS = Low	4	–	ns
$t_{JIT,IN(cc)}$	Input Cycle to Cycle Jitter[20]		–	185	ps
t_{DCIN}[21]	Input Duty Cycle	Over 10,000 cycles	40%	60%	t_{CYCLE}
t_{RIN} / t_{FIN}	Rise and Fall Times	Measured at 20%–80% of input voltage for REFCLK and REFCLKB inputs	175	700	ps
Δt_{RIN} / t_{FIN}	Rise and Fall Times Difference		–	150	ps
p_{MIN}[22]	Modulation Index for triangular modulation		–	0.6	%
	Modulation Index for non-triangular modulation		–	0.5[23]	%
f_{MIN}[22]	Input Frequency Modulation		30	33	kHz
$t_{SR,IN}$	Input Slew Rate (measured at 20%–80% of input voltage) for REFCLK		1	4	V/ns
$C_{IN,REF}$	Capacitance at REFCLK inputs		–	7	pF
$C_{IN,CMOS}$	Capacitance at CMOS inputs		–	10	pF
f_{SCL}	SMBus clock frequency input in SCL pin		DC	100	kHz

Notes

19. Not 100% tested except V_{IXCLK} and ΔV_{IXCLK}. Parameters guaranteed by design and characterizations, not 100% tested in production.
20. Jitter measured at crossing points and is the absolute value of the worst case deviation.
21. Measured at crossing points.
22. If input modulation is used; input modulation is allowed but not required.
23. The amount of allowed spreading for any non-triangular modulation is determined by the induced downstream tracking skew that cannot exceed the skew generated by the specified 0.6% triangular modulation. Typically, the amount of allowed non-triangular modulation is about 0.5%.

AC Electrical Specifications

The AC Electrical specifications follow.

Parameter [24]	Description	Min	Typ	Max	Unit
t_{CYCLE}	Clock Cycle time[25]	1.25	–	3.34	ns
$t_{JIT(cc)}$	Jitter over 1-6 clock cycles at 400–635 MHz[26]	–	25	40	ps
	Jitter over 1-6 clock cycles at 638–800 MHz	–	25	30	ps
L_{20}	Phase noise SSB spectral purity L(f) at 20 MHz offset: 400–500 MHz (In addition, device must not exceed $L(f) = 10\log[1+(50x10^6/f)^{2.4}] - 138$ for f = 1 MHz to 100 MHz except for the region near f = REFCLK/Q where Q is the value of the internal reference divider.)	–	–135	–128	dBC/Hz
	533 MHz and faster output	–	–	TBD	
$t_{JIT(hper,cc)}$	Cycle-to-cycle duty cycle error at 400–635 MHz	–	25	40	ps
	Cycle-to-cycle duty cycle error at 636–800 MHz	–	25	30	ps
Δt_{SKEW}	Drift in t_{SKEW} when ambient temperature varies between 0 °C and 70 °C and supply voltage varies between 2.375 V and 2.625 V.[27]	–	–	15	ps
DC	Long term average output duty cycle	45%	50	55%	t_{CYCLE}
$t_{EER,SCC}$	PLL output phase error when tracking SSC	–100	–	100	ps
t_{CR},t_{CF}	Output rise and fall times at 400–800 MHz (measured at 20%–80% of output voltage)	120	–	300	ps
$t_{CR,CF}$	Difference between output rise and fall times on the same pin of the single device (20%–80%) of 400–800 MHz[28]	–	–	100	ps

Notes

24. Not 100% tested except V_{IXCLK} and ΔV_{IXCLK}. Parameters guaranteed by design and characterizations, not 100% tested in production.
25. Max and min output clock cycle times are based on nominal outputs frequency of 300 and 800 MHz, respectively. For spread spectrum modulated differential or single-ended REFCLK, the output clock tracks the modulation of the input.
26. Output short term jitter spec is the absolute value of the worst case deviation.
27. t_{SKEW} is the timing difference between any two of the four differential clocks and is measured at common mode voltage. Δt_{SKEW} is the change in t_{SKEW} when the operating temperature and supply voltage change.
28. $t_{CR,CF}$ applies only when appropriate R_{RC} and output resistor network resistor values are selected to match pull up and pull down currents.

Test and Measurement Setup

Figure 3. Clock Outputs

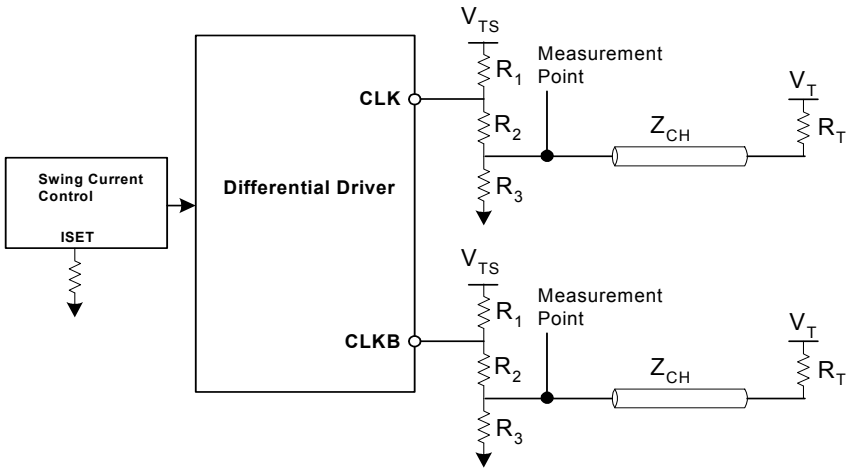

Table 7. Example External Resistor Values and Termination Voltages for a 50 Ω Channel

Parameter	Value	Unit
R_1	39.2	Ω
R_2	66.5	Ω
R_3	93.1	Ω

Table 7. Example External Resistor Values and Termination Voltages for a 50 Ω Channel

Parameter	Value	Unit
R_T	49.9	Ω
R_{RC}	200	Ω
V_{TS}	2.5V	V
V_T	1.2V	V

Signal Waveforms

A physical signal that appears at the pins of a device is deemed valid or invalid depending on its voltage and timing relations with other signals. Input and output voltage waveforms are defined as shown in Figure 4. Both rise and fall times are defined between the 20% and 80% points of the voltage swing, with the swing defined as V_H–V_L.

Figure 5 shows the definition of the output crossing point. The nominal crossing point between the complementary outputs is defined as the 50% point of the DC voltage levels. There are two crossing points defined: Vx+ at the rising edge of CLK and Vx– at the falling edge of CLK. For some waveforms, both Vx+ and Vx– are below Vx,nom (for example, if t_{CR} is larger than t_{CF}).

Figure 4. Input and Output Waveforms

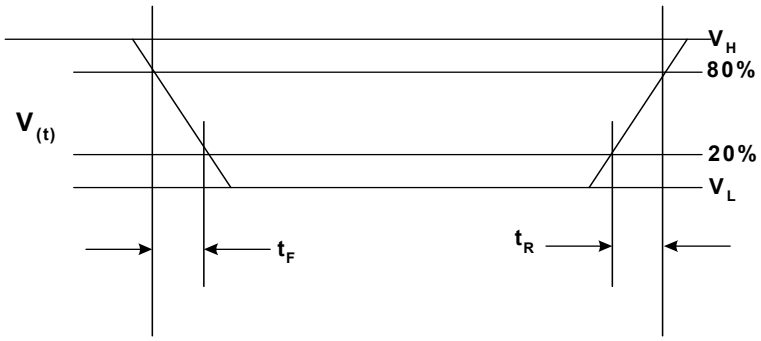

Figure 5. Crossing Point Voltage

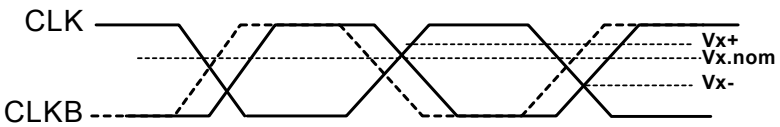

Jitter

This section defines the specifications that relate to timing uncertainty (or jitter) of the input and output waveforms. Figure 6 shows the definition of cycle-to-cycle jitter with respect to the falling edge of the CLK signal. Cycle-to-cycle jitter is the difference between cycle times of adjacent cycles. Equal requirements apply rising edges of the CLK signal. Figure 7 shows the definition of cycle-to-cycle duty cycle error ($t_{DC,ERR}$). Cycle-to-cycle duty cycle is defined as the difference between t_{PW+} (high times) of adjacent differential clock cycles. Equal requirements apply to t_{PW-}, low times of the differential click cycles.

Figure 6. Cycle-to-cycle Jitter

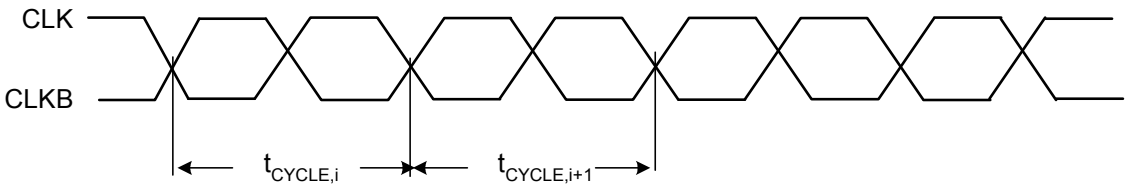

$$t_J = t_{CYCLE,i} - t_{CYCLE,i+1} \text{ over 10,000 consecutive cycles}$$

Figure 7. Cycle-to-cycle Duty-cycle Error

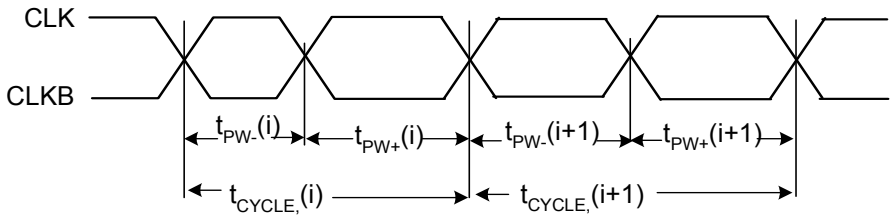

$$t_{DC,ERR} = t_{PW-}(i) - t_{PW-}(i+1) \text{ and } t_{PW-}(i+1) - t_{PW+}(i+1)$$

Ordering Information

Part Number	Package Type	Product Flow
Pb-free		
CY24271ZXC	28-pin TSSOP	Commercial, 0 °C to 70 °C
CY24271ZXCT	28-pin TSSOP – Tape and Reel	Commercial, 0 °C to 70 °C

Ordering Code Definitions

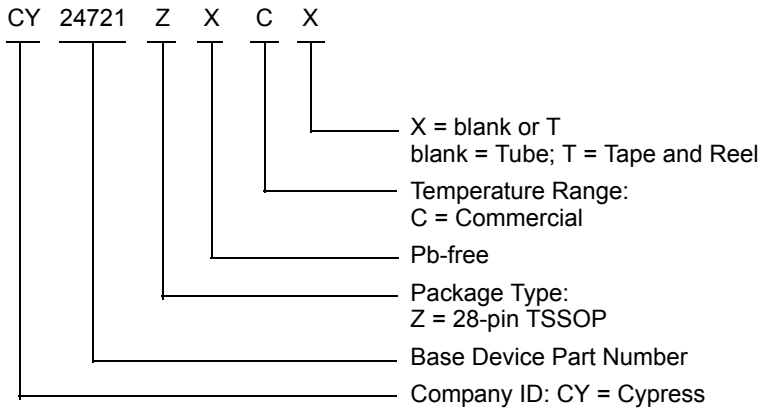

Package Drawing and Dimension

Figure 8. 28-pin TSSOP (4.40 mm Body) Z28.173/ZZ28.173 Package Outline, 51-85120

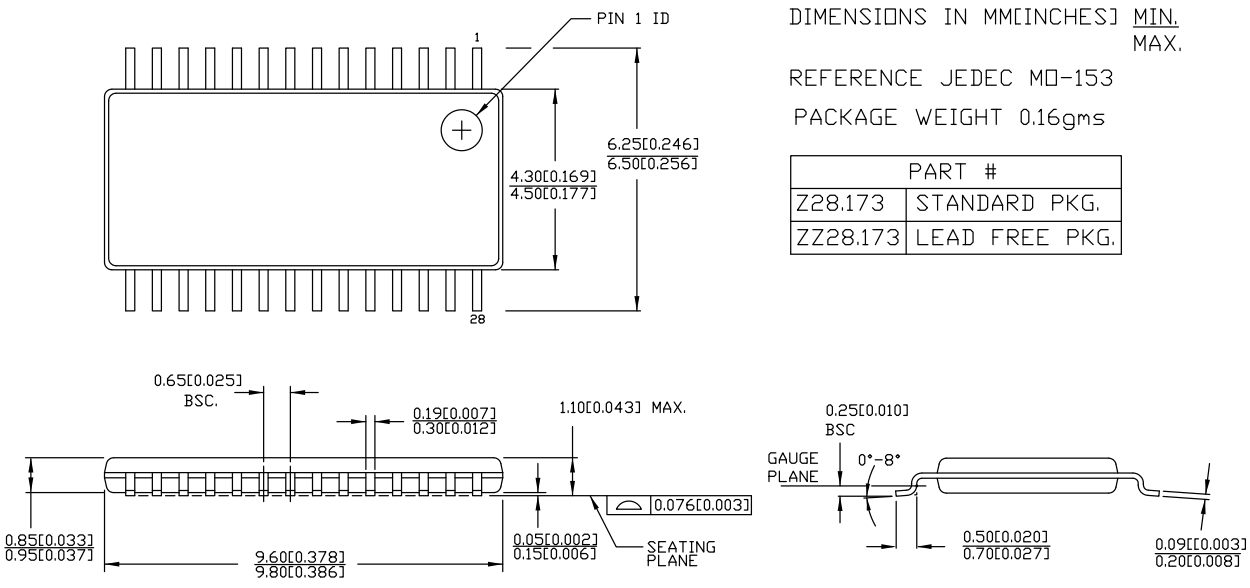

51-85120 *D

Acronyms

Acronym	Description
CMOS	Complementary Metal Oxide Semiconductor
ESD	Electrostatic Discharge
PLL	Phase Locked Loop
TSSOP	Thin Shrunk Small Outline Package
XDR	Extended Data Rate

Document Conventions

Units of Measure

Symbol	Unit of Measure
°C	degree Celsius
Hz	hertz
kHz	kilohertz
MHz	megahertz
µA	microampere
mA	milliampere
ms	millisecond
mV	millivolt
ns	nanosecond
Ω	ohm
%	percent
pF	picofarad
ps	picosecond
V	volt

Document History Page

Document Title: CY24271, Rambus® XDR™ Clock Generator Document Number: 001-00411				
Rev.	**ECN No.**	**Issue Date**	**Orig. of Change**	**Description of Change**
**	378263	See ECN	RGL	New data sheet.
*A	492065	See ECN	KKVTMP	Replaced VSSC with VSS in all instances across the document. Replaced VSSB with VSSC in all instances across the document. Replaced SCLK with SCL in all instances across the document. Replaced SDATA with SDA in all instances across the document. Replaced BYPASSB with /BYPASS in all instances across the document. Replaced VDDO with VDD in all instances across the document. Replaced VSSO with VSS in all instances across the document. Replaced VSSG with VSS in all instances across the document. Updated Pin Definitions.
*B	1333483	See ECN	FGA / SFV	Updated DC Electrical Specifications: Added values for I_{DD} parameter.
*C	3162845	02/04/2011	BASH	Added Ordering Code Definitions under Ordering Information. Updated Package Drawing and Dimension. Added Acronyms and Units of Measure. Updated to new template.
*D	4292206	02/26/2014	CINM	Updated Package Drawing and Dimension: spec 51-85120 – Changed revision from *B to *C. Updated to new template. Completing Sunset Review.
*E	4581659	11/27/2014	AJU	Updated Functional Description: Added “For a complete list of related documentation, click here.” at the end. Updated Package Drawing and Dimension: spec 51-85120 – Changed revision from *C to *D.
*F	5279278	05/20/2016	PSR	Added Thermal Resistance. Updated to new template.
*G	5660017	03/14/2017	XHT	No technical updates. Completing Sunset Review.
*H	5971807	11/20/2017	AESATMP8	Updated logo and Copyright.

Sales, Solutions, and Legal Information

Worldwide Sales and Design Support

Cypress maintains a worldwide network of offices, solution centers, manufacturer's representatives, and distributors. To find the office closest to you, visit us at Cypress Locations.

Products

ARM® Cortex® Microcontrollers	cypress.com/arm
Automotive	cypress.com/automotive
Clocks & Buffers	cypress.com/clocks
Interface	cypress.com/interface
Internet of Things	cypress.com/iot
Memory	cypress.com/memory
Microcontrollers	cypress.com/mcu
PSoC	cypress.com/psoc
Power Management ICs	cypress.com/pmic
Touch Sensing	cypress.com/touch
USB Controllers	cypress.com/usb
Wireless Connectivity	cypress.com/wireless

PSoC® Solutions

PSoC 1 | PSoC 3 | PSoC 4 | PSoC 5LP | PSoC 6

Cypress Developer Community

Forums | WICED IOT Forums | Projects | Video | Blogs | Training | Components

Technical Support

cypress.com/support

© Cypress Semiconductor Corporation, 2005-2017. This document is the property of Cypress Semiconductor Corporation and its subsidiaries, including Spansion LLC ("Cypress"). This document, including any software or firmware included or referenced in this document ("Software"), is owned by Cypress under the intellectual property laws and treaties of the United States and other countries worldwide. Cypress reserves all rights under such laws and treaties and does not, except as specifically stated in this paragraph, grant any license under its patents, copyrights, trademarks, or other intellectual property rights. If the Software is not accompanied by a license agreement and you do not otherwise have a written agreement with Cypress governing the use of the Software, then Cypress hereby grants you a personal, non-exclusive, nontransferable license (without the right to sublicense) (1) under its copyright rights in the Software (a) for Software provided in source code form, to modify and reproduce the Software solely for use with Cypress hardware products, only internally within your organization, and (b) to distribute the Software in binary code form externally to end users (either directly or indirectly through resellers and distributors), solely for use on Cypress hardware product units, and (2) under those claims of Cypress's patents that are infringed by the Software (as provided by Cypress, unmodified) to make, use, distribute, and import the Software solely for use with Cypress hardware products. Any other use, reproduction, modification, translation, or compilation of the Software is prohibited.

TO THE EXTENT PERMITTED BY APPLICABLE LAW, CYPRESS MAKES NO WARRANTY OF ANY KIND, EXPRESS OR IMPLIED, WITH REGARD TO THIS DOCUMENT OR ANY SOFTWARE OR ACCOMPANYING HARDWARE, INCLUDING, BUT NOT LIMITED TO, THE IMPLIED WARRANTIES OF MERCHANTABILITY AND FITNESS FOR A PARTICULAR PURPOSE. To the extent permitted by applicable law, Cypress reserves the right to make changes to this document without further notice. Cypress does not assume any liability arising out of the application or use of any product or circuit described in this document. Any information provided in this document, including any sample design information or programming code, is provided only for reference purposes. It is the responsibility of the user of this document to properly design, program, and test the functionality and safety of any application made of this information and any resulting product. Cypress products are not designed, intended, or authorized for use as critical components in systems designed or intended for the operation of weapons, weapons systems, nuclear installations, life-support devices or systems, other medical devices or systems (including resuscitation equipment and surgical implants), pollution control or hazardous substances management, or other uses where the failure of the device or system could cause personal injury, death, or property damage ("Unintended Uses"). A critical component is any component of a device or system whose failure to perform can be reasonably expected to cause the failure of the device or system, or to affect its safety or effectiveness. Cypress is not liable, in whole or in part, and you shall and hereby do release Cypress from any claim, damage, or other liability arising from or related to all Unintended Uses of Cypress products. You shall indemnify and hold Cypress harmless from and against all claims, costs, damages, and other liabilities, including claims for personal injury or death, arising from or related to any Unintended Uses of Cypress products.

Cypress, the Cypress logo, Spansion, the Spansion logo, and combinations thereof, WICED, PSoC, CapSense, EZ-USB, F-RAM, and Traveo are trademarks or registered trademarks of Cypress in the United States and other countries. For a more complete list of Cypress trademarks, visit cypress.com. Other names and brands may be claimed as property of their respective owners.

Looking for pricing, stock, or lifecycle information?

Click below to explore more details on WIN SOURCE:

- View CY24271ZXC on WIN SOURCE
- Cypress Semiconductor Corp Information

Optimize Your Supply Chain with WIN SOURCE Solutions

- Global Sourcing Solution
- Obsolete Management
- Cost Control Management
- Shortage Management
- Alternative Solution
- Excess Inventory Management