THE DATASHEET OF

3329H-1-103



Features

- 1/4 ˝ Round / Single-Turn / Cermet Industrial / Sealed
- 5 standard terminal styles
- Tape and reel packaging available
- Listed on the QPL for style RJ50 per MIL-PRF-22097 and RJR50 per High-Rel MIL-PRF-39035
- RoHS compliant* version available
- For trimmer applications/processing guidelines, click here

3329 – 1/4 ˝ Round Trimpot® Trimming Potentiometer

Additional Information

Click these links for more information:

PRODUCT SELECTOR | TECHNICAL LIBRARY | INVENTORY | SAMPLES | CONTACT

Electrical Characteristics

Standard Resistance Range
.....10 to 1 megohm
(see standard resistance table)
Resistance Tolerance .....±10 % std.
(closer tolerance available)
Absolute Minimum Resistance
.....1 % or 2 ohms
(whichever is greater)
Contact Resistance Variation
.....3.0 % or 3 ohms max.
(whichever is greater)
Adjustability
Voltage .....±0.05 %
Resistance .....±0.15 %
Resolution..... Infinite
Insulation Resistance ..... 500 vdc.
1,000 megohms min.
Dielectric Strength
Sea Level ..... 600 vac
80,000 Feet..... 250 vac
Adjustment Angle..... 240 ° nom.

Environmental Characteristics

Power Rating @ 85 °C (300 volts max.)
..... 0.5 watt
Power Rating @ 150 °C ..... 0 watt
Temperature Range.... -55 °C to +150 °C
Temperature Coefficient .....±100 ppm/°C
Seal Test.....85 °C Fluorinert†
Humidity..... MIL-STD-202 Method 103
96 hours
(3 % ΔTR, 10 Megohms IR)
Vibration ..... 30 G (1 % ΔTR; 1 % ΔVR)
except "P" pin style
Shock..... 100 G (1 % ΔTR; 1 % ΔVR)
Load Life
..... 1,000 hours 0.5 watt @ 85 °C
(3 % ΔTR; 3 % CRV)
Rotational Life.....200 cycles
(4 % ΔTR; 4 % CRV)

Product Dimensions

3329H

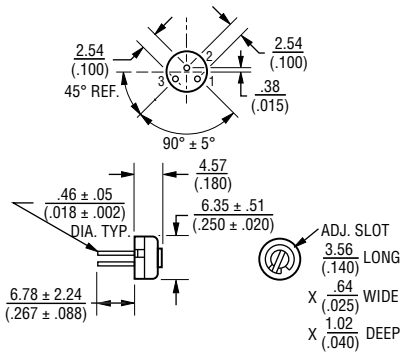

3329P

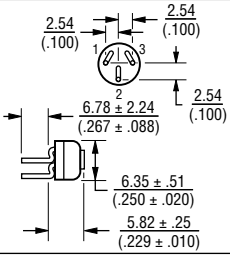

3329S

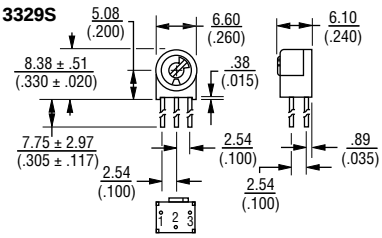

3329W

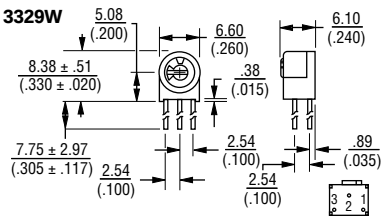

3329X

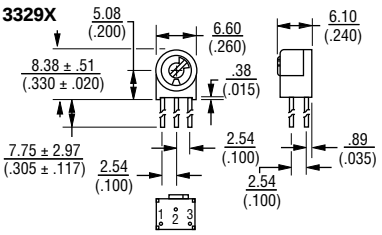

3329P-DK9

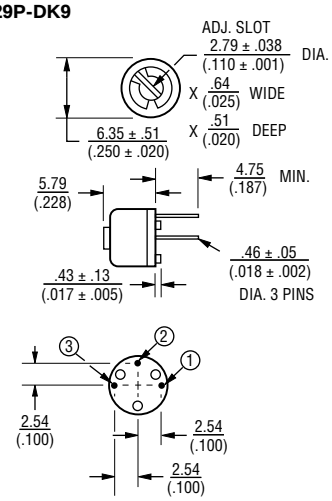

DIMENSIONS: MM / (INCHES)

TOLERANCES: ± 0.25 / (.010) EXCEPT WHERE NOTED

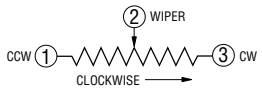

How To Order

3329 M - 1 - 103 __ LF

Model
Style
Standard or Modified Product Indicator
-1 = Standard Product
-DK9 = Plastic Spacer
Resistance Code
Packaging Designator
Blank = Tube (Standard)
R = Tape and Reel (M & U Pin Styles Only)
A = Ammo Pack (M & U Pin Styles Only)
Terminations
LF = 100 % Tin-plated (RoHS compliant)
Blank = 90 % Tin / 10 % Lead-plated (Standard)

Consult factory for other available options.

Tape and reel material meets Antistatic ANSI/ESD 5541-2003 packaging standards.

WARNING Cancer and Reproductive Harm
www.P65Warnings.ca.gov

*RoHS Directive 2015/863, Mar. 31, 2015 and Annex
"Trimpot" is a trademark of Bourns, Inc. †"Fluorinert" is a registered trademark of 3M Co.
Specifications are subject to change without notice. Users should verify actual device performance in their specific applications. The products described herein and this document are subject to specific legal disclaimers as set forth on the last page of this document, and at www.bourns.com/docs/legal/disclaimer.pdf.

3329 – 1/4 ˝ Round Trimpot® Trimming Potentiometer

BOURNS®

Physical Characteristics

Mechanical Angle ..... 260 ° nom.
Torque..... 5.0 oz-in. max.
Stop Strength..... 5.0 oz -in. min.
Terminals ..... Solderable pins
Weight ..... 0.02 oz.
Marking..... Manufacturer's trademark, resistance code, date code, manufacturer's model number and style
Wiper ..... 50 % (Actual TR) ±10 %
Standard Packaging ..... 50 pcs. per tube
Adjustment Tool H-90

Standard Resistance Table

Resistance (Ohms)	Resistance Code
10	100
20	200
50	500
100	**101**
200	**201**
500	**501**
1,000	**102**
2,000	**202**
5,000	**502**
10,000	**103**
20,000	**203**
25,000	**253**
50,000	**503**
100,000	**104**
200,000	204
250,000	254
500,000	504
1,000,000	105

Popular distribution resistance values listed in boldface. Special resistances available.

Packaging Specifications

SIDE ADJUST
3329M-1

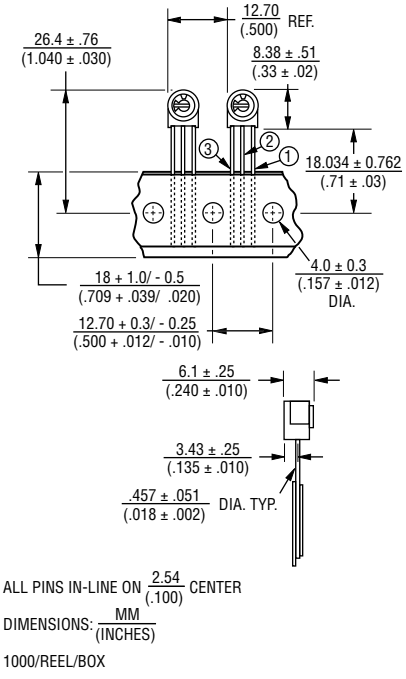

ALL PINS IN-LINE ON 2.54 (.100) CENTER

DIMENSIONS: MM (INCHES)

1000/REEL/BOX

TOP ADJUST
3329U-1

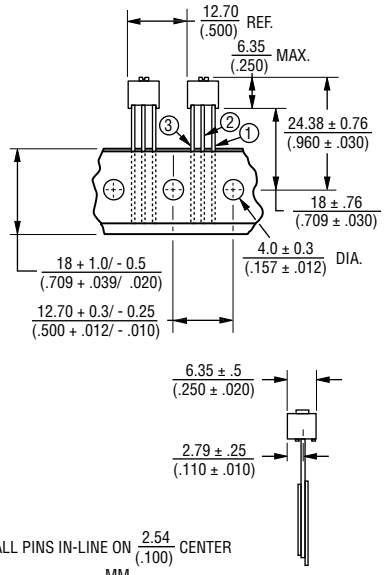

ALL PINS IN-LINE ON 2.54 (.100) CENTER

DIMENSIONS: MM (INCHES)

1000/REEL/BOX

Meets EIA Specification 468.

BOURNS®

Asia-Pacific: Tel: +886-2 2562-4117 • Email: asiacus@bourns.com
EMEA: Tel: +36 88 885 877 • Email: eurocus@bourns.com
The Americas: Tel: +1-951 781-5500 • Email: americus@bourns.com
www.bourns.com

REV. 08/19

"Trimpot" is a registered trademark of Bourns, Inc.
Specifications are subject to change without notice.
Users should verify actual device performance in their specific applications.
The products described herein and this document are subject to specific legal disclaimers as set forth on the last page of this document, and at www.bourns.com/docs/legal/disclaimer.pdf.

Legal Disclaimer Notice

BOURNS®

This legal disclaimer applies to purchasers and users of Bourns® products manufactured by or on behalf of Bourns, Inc. and its affiliates (collectively, "Bourns").

Unless otherwise expressly indicated in writing, Bourns® products and data sheets relating thereto are subject to change without notice. Users should check for and obtain the latest relevant information and verify that such information is current and complete before placing orders for Bourns® products.

The characteristics and parameters of a Bourns® product set forth in its data sheet are based on laboratory conditions, and statements regarding the suitability of products for certain types of applications are based on Bourns' knowledge of typical requirements in generic applications. The characteristics and parameters of a Bourns® product in a user application may vary from the data sheet characteristics and parameters due to (i) the combination of the Bourns® product with other components in the user's application, or (ii) the environment of the user application itself. The characteristics and parameters of a Bourns® product also can and do vary in different applications and actual performance may vary over time. Users should always verify the actual performance of the Bourns® product in their specific devices and applications, and make their own independent judgments regarding the amount of additional test margin to design into their device or application to compensate for differences between laboratory and real world conditions.

Unless Bourns has explicitly designated an individual Bourns® product as meeting the requirements of a particular industry standard (e.g., ISO/TS 16949) or a particular qualification (e.g., UL listed or recognized), Bourns is not responsible for any failure of an individual Bourns® product to meet the requirements of such industry standard or particular qualification. Users of Bourns® products are responsible for ensuring compliance with safety-related requirements and standards applicable to their devices or applications.

Bourns® products are not recommended, authorized or intended for use in nuclear, lifesaving, life-critical or life-sustaining applications, nor in any other applications where failure or malfunction may result in personal injury, death, or severe property or environmental damage. Unless expressly and specifically approved in writing by two authorized Bourns representatives on a case-by-case basis, use of any Bourns® products in such unauthorized applications might not be safe and thus is at the user's sole risk. Life-critical applications include devices identified by the U.S. Food and Drug Administration as Class III devices and generally equivalent classifications outside of the United States.

Bourns expressly identifies those Bourns® standard products that are suitable for use in automotive applications on such products' data sheets in the section entitled "Applications." Unless expressly and specifically approved in writing by two authorized Bourns representatives on a case-by-case basis, use of any other Bourns® standard products in an automotive application might not be safe and thus is not recommended, authorized or intended and is at the user's sole risk. If Bourns expressly identifies a sub-category of automotive application in the data sheet for its standard products (such as infotainment or lighting), such identification means that Bourns has reviewed its standard product and has determined that if such Bourns® standard product is considered for potential use in automotive applications, it should only be used in such sub-category of automotive applications. Any reference to Bourns® standard product in the data sheet as compliant with the AEC-Q standard or "automotive grade" does not by itself mean that Bourns has approved such product for use in an automotive application.

Bourns® standard products are not tested to comply with United States Federal Aviation Administration standards generally or any other generally equivalent governmental organization standard applicable to products designed or manufactured for use in aircraft or space applications. Bourns expressly identifies Bourns® standard products that are suitable for use in aircraft or space applications on such products' data sheets in the section entitled "Applications." Unless expressly and specifically approved in writing by two authorized Bourns representatives on a case-by-case basis, use of any other Bourns® standard product in an aircraft or space application might not be safe and thus is not recommended, authorized or intended and is at the user's sole risk.

The use and level of testing applicable to Bourns® custom products shall be negotiated on a case-by-case basis by Bourns and the user for which such Bourns® custom products are specially designed. Absent a written agreement between Bourns and the user regarding the use and level of such testing, the above provisions applicable to Bourns® standard products shall also apply to such Bourns® custom products.

Users shall not sell, transfer, export or re-export any Bourns® products or technology for use in activities which involve the design, development, production, use or stockpiling of nuclear, chemical or biological weapons or missiles, nor shall they use Bourns® products or technology in any facility which engages in activities relating to such devices. The foregoing restrictions apply to all uses and applications that violate national or international prohibitions, including embargos or international regulations. Further, Bourns® products and Bourns technology and technical data may not under any circumstance be exported or re-exported to countries subject to international sanctions or embargoes. Bourns® products may not, without prior authorization from Bourns and/or the U.S. Government, be resold, transferred, or re-exported to any party not eligible to receive U.S. commodities, software, and technical data.

To the maximum extent permitted by applicable law, Bourns disclaims (i) any and all liability for special, punitive, consequential, incidental or indirect damages or lost revenues or lost profits, and (ii) any and all implied warranties, including implied warranties of fitness for particular purpose, non-infringement and merchantability.

For your convenience, copies of this Legal Disclaimer Notice with German, Spanish, Japanese, Traditional Chinese and Simplified Chinese bilingual versions are available at:

Web Page: http://www.bourns.com/legal/disclaimers-terms-and-policies

PDF: http://www.bourns.com/docs/Legal/disclaimer.pdf

Looking for pricing, stock, or lifecycle information?

Click below to explore more details on WIN SOURCE:

- View 3329H-1-103 on WIN SOURCE
- Bourns Inc. Information

Optimize Your Supply Chain with WIN SOURCE Solutions

- Global Sourcing Solution
- Obsolete Management
- Cost Control Management
- Shortage Management
- Alternative Solution
- Excess Inventory Management