THE DATASHEET OF

NX5P2190UKZ

www.win-source.net 0086-755-83957316

NX5P2190

Logic controlled high-side power switch

Rev. 1.1 — 15 January 2015 Product data sheet

1. General description

The NX5P2190 is an advanced power switch with adjustable current limit. It includes under-voltage and over-voltage lockout, over-current, over-temperature, reverse bias and in-rush current protection circuits. These circuits are designed to isolate a voltage source from a VBUS interface pin automatically when a fault occurs. The device features two power switch terminals, one input (VINT) and one output (VBUS). A current limit input (ILIM) defines the over-current and in-rush current limit, and a voltage detect output (VDET) monitors the voltage level on VBUS. An open-drain fault output ($\overline{FAULT}$) indicates when a fault condition occurs. An enable input (EN) controls the state of the switch. When EN is set LOW the device enters a low-power mode, disabling all protection circuits except the under-voltage lockout. The low-power mode can be entered at anytime unless the over temperature protection circuit has been triggered.

Designed for operation from 3 V to 5.5 V, the NX5P2190 is a complete solution for power domain isolation and protection applications. The enable input includes integrated logic level translation making the device compatible with lower voltage processors and controllers.

2. Features and benefits

- Wide supply voltage range from 3 V to 5.5 V
- 30 V tolerant on VBUS
- I_{SW} maximum 2 A continuous current
- Very low ON resistance: 100 mΩ (maximum) at a supply voltage of 4.0 V
- Low-power mode (ground current 20 μA typical)
- 1.8 V control logic
- Soft start turn-on slew rate
- Protection circuitry
  - Over-temperature protection
  - Over-current protection with low current output mode
  - Reverse bias current/Back drive protection
  - Over-voltage lockout
  - Under-voltage lockout
  - Analog voltage limited VBUS monitor path
- ESD protection:
  - HBM JDS-001 Class 2 exceeds 2 kV
  - IEC61000-4-2 contact discharge exceeds 8 kV for pins VBUS
- Specified from −40 °C to +85 °C

3. Applications

- USB OTG applications

4. Ordering information

Table 1. Ordering information

Type number	Package			
	Temperature range	Name	Description	Version
NX5P2190UK	–40 °C to +85 °C	WLCSP9	wafer level chip-scale package; 9 bumps; body 1.36 x 1.36 x 0.51 mm. (Backside coating included)	NX5P2190UK

5. Marking

Table 2. Marking codes

Type number	Marking code
NX5P2190UK	NX5PC

6. Functional diagram

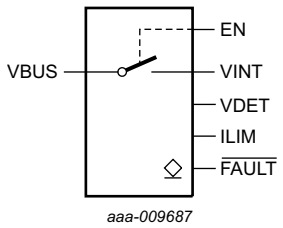

Fig 1. Logic symbol

All information provided in this document is subject to legal disclaimers.

© NXP Semiconductors N.V. 2015. All rights reserved.

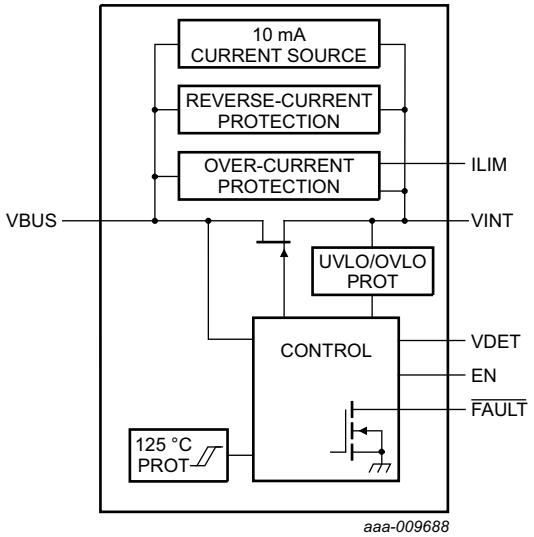

Fig 2. Logic diagram (simplified schematic)

7. Pinning information

7.1 Pinning

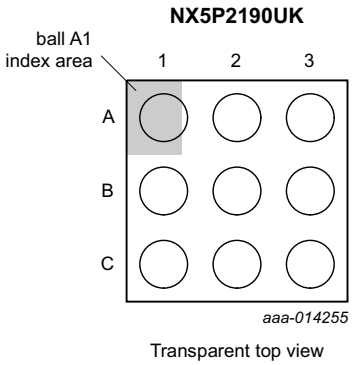

Fig 3. Pin configuration WLCSP9 package

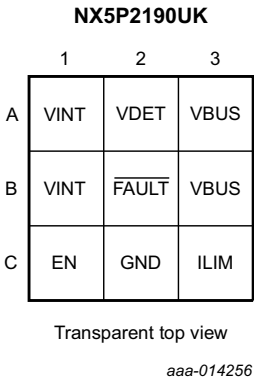

Fig 4. Ball mapping for WLCSP9

All information provided in this document is subject to legal disclaimers.

© NXP Semiconductors N.V. 2015. All rights reserved.

7.2 Pin description

Table 3. Pin description

Symbol	Pin	Description
VINT	A1, B1	internal circuitry voltage I
VBUS	A3, B3	external connector voltage O
EN	C1	enable input (active HIGH) I
ILIM	C3	current limiter I/O
VDET	A2	VBUS voltage level indicator O
$\overline{\text{FAULT}}$	B2	fault condition indicator (open-drain; active LOW)
GND	C2	ground (0 V)

8. Functional description

Table 4. Function table[1]

EN	VINT	VBUS	$\overline{\text{FAULT}}$	Operation mode
X	0 V	Z	L	No supply
X	0 V	< 30 V	Z	Disabled; switch open
X	< 3.2 V	Z	L	Under-voltage lockout; switch open
H	> 5.5 V	Z	L	Over-voltage lockout; switch open
H	3.2 V to 5.5 V	Z	L	Over-temperature; switch open
L	3.2 V to 5.5 V	Z	Z	Disabled; switch open
H	3.2 V to 5.5 V	VBUS = VINT	Z	Enabled; switch closed; active
H	3.2 V to 5.5 V	0 V to VINT	L	Over-current; Switch open; constant current on VBUS
H	3.2 V to 5.5 V	0 V to VINT	L	When ILIM is connected to GND, VBUS is default supplied with 10 mA current source
H	3.2 V to 5.5 V	VINT + 30 mV < VBUS < VINT + 0.45 V (> 4 ms)	L	Reverse bias current/back drive; switch open
H	3.2 V to 5.5 V	VBUS > VINT + 0.45 V	L	Reverse bias current/back drive; switch open

[1] H = HIGH voltage level; L = LOW voltage level, Z = high-impedance OFF-state, X = Don't care.

Table 5. Function table VDET versus VBUS[1]

VBUS	VDET	Operation mode
3 V < VBUS < 30 V	1.5 < VDET < 5.5 V	VDET detects VBUS voltage

[1] See Figure 22.

All information provided in this document is subject to legal disclaimers.

© NXP Semiconductors N.V. 2015. All rights reserved.

8.1 EN input

If EN is set LOW, the N-channel MOSFET is disabled, the $\overline{FAULT}$ output is set HIGH-impedance and the device enters low-power mode. In low-power mode, all protection circuits are disabled except the under-voltage lockout circuit. If EN is set HIGH, all protection circuits are reactivated. If no fault conditions exist and an R_{ILIM} current limit resistor is detected, the N-channel MOSFET is enabled.

8.2 Under-voltage lockout (UVLO)

The UVLO circuit is active until VINT > 3.2 V. It disables the N-channel MOSFET, sets the $\overline{FAULT}$ output LOW and returns the device to low-power mode. The EN pin does not affect the UVLO circuit. Once VINT > 3.2 V, the EN pin controls the N-channel MOSFET state. The UVLO circuit remains active in low-power mode.

8.3 Over-voltage lockout (OVLO)

If EN is set HIGH and VINT > 5.9 V, the OVLO circuit is active. It disables the N-channel MOSFET and sets the $\overline{FAULT}$ output LOW. In low-power mode, the OVLO circuit is disabled and does not change the $\overline{FAULT}$ output state. If the OVLO circuit is active, setting the EN pin LOW returns the device to low-power mode.

8.4 ILIM

The over-current protection circuit's (OCP) trigger value I_{ocp}, is set using an external resistor connected to the ILIM pin (see Figure 6). If EN is set HIGH and the ILIM pin is grounded, the device is in over-current. The N-channel MOSFET is disabled, the $\overline{FAULT}$ output is set LOW and VBUS supplied by the 10 mA current source.

8.5 Over-current protection (OCP)

When the current through the N-channel MOSFET exceeds I_{ocp} for 20 μs or VBUS < VINT – 200 mV, the device is in over-current. The OCP circuit disables the N-channel MOSFET within 2 μs, sets the $\overline{FAULT}$ output LOW and supplies VBUS from the 10 mA current source. The OCP circuit is automatically reset when VINT > VBUS > VINT – 200 mV for 20 μs. The N-channel MOSFET assumes the state defined by EN, the 10 mA current source is disconnected and the $\overline{FAULT}$ output is set HIGH-impedance. If the OCP circuit is active, setting the EN pin LOW returns the device to low-power mode.

8.6 Over-temperature protection (OTP)

If EN is set HIGH and the device temperature exceeds 125 °C, the device is in over temperature. The OTP circuit disables the N-channel MOSFET and sets the $\overline{FAULT}$ output LOW. Transitions on the EN pin have no effect. Once its temperature decreases to below 115 °C the device returns to the defined state. The OTP circuit is disabled in low-power mode.

All information provided in this document is subject to legal disclaimers.

© NXP Semiconductors N.V. 2015. All rights reserved.

8.7 Reverse bias current/back drive protection (RCP)

The reverse bias current protection circuit can only be triggered when EN is set HIGH. If VBUS > (VINT + 30 mV) for longer than 4 ms; or VBUS > (VINT + 0.45 V) the device is in reverse bias. The RCP circuit disables the N-channel MOSFET and sets the $\overline{\text{FAULT}}$ output LOW. Once VBUS < VINT for longer than 4 ms the device returns to the defined state. If the RCP circuit is active, setting the EN pin LOW returns the device to low-power mode.

8.8 $\overline{\text{FAULT}}$ output

The $\overline{\text{FAULT}}$ output is an open-drain output that requires an external pull-up resistor. If any of the UVLO, OVLO, RCP, OCP or OTP circuits is activated, the $\overline{\text{FAULT}}$ output is set LOW to indicate that a fault has occurred. The $\overline{\text{FAULT}}$ output returns to the high impedance state automatically once the fault condition is removed.

8.9 VDET output

VDET is an analog output that allows a controller to monitor the voltage level on VBUS.

8.10 In-rush current protection

When the N-channel MOSFET is enabled, the in-rush current protection circuit clamps the switch current until VBUS = VINT – 200 mV. The resistor connected to ILIM sets the clamp current. The in-rush current protection circuit is disabled in low-power mode.

All information provided in this document is subject to legal disclaimers.

© NXP Semiconductors N.V. 2015. All rights reserved.

9. Application diagram

The NX5P2190 typically connects a voltage source on VINT to the VBUS of a battery operated device. The external resistor R_{ILIM} sets the maximum current limit threshold. The $\overline{FAULT}$ output is open-drain. It requires an external pull-up resistor.

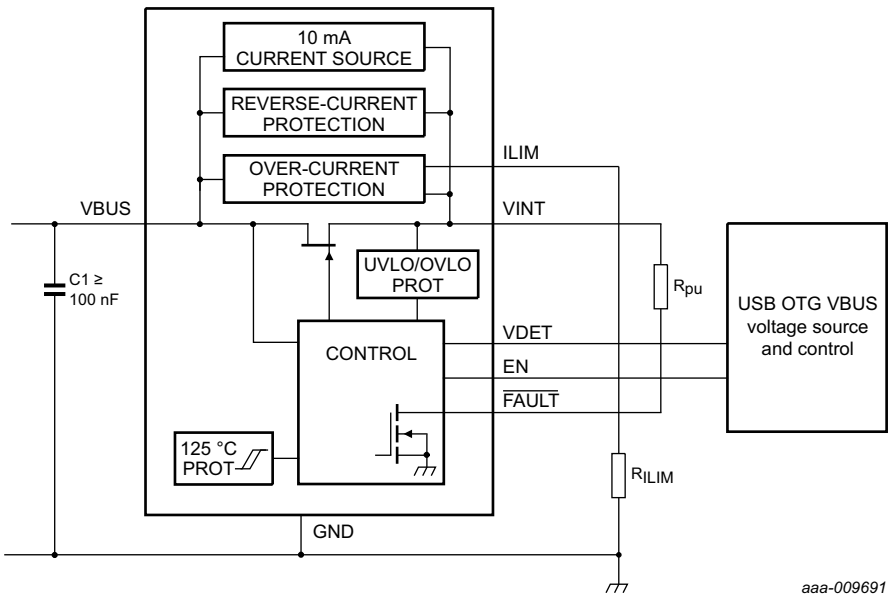

Fig 5. NX5P2190 application diagram

All information provided in this document is subject to legal disclaimers.

© NXP Semiconductors N.V. 2015. All rights reserved.

10. Limiting values

Table 6. Limiting values

In accordance with the Absolute Maximum Rating System (IEC 60134). Voltages are referenced to GND (ground = 0 V).

Symbol	Parameter	Conditions		Min	Max	Unit
V_I	input voltage	VBUS	[1]	–0.5	+32	V
		VINT	[1]	–0.5	+6.5	V
		EN, ILIM	[2][3]	–0.5	VINT + 0.5	V
V_O	output voltage	$\overline{FAULT}$		–0.5	+6.0	V
I_{IK}	input clamping current	EN: V_I < –0.5 V		–50	-	mA
I_{SK}	switch clamping current	VBUS; VINT; V_I < –0.5 V		–50	-	mA
I_{SW}	switch current	T_{amb} = 85 °C		-	±2000	mA
$T_{j(max)}$	maximum junction temperature			–40	+125	°C
T_{stg}	storage temperature			–65	+150	°C
P_{tot}	total power dissipation		[4]	-	400	mW

[1] The minimum and maximum switch voltage ratings may be exceeded if the switch clamping current rating is observed.

[2] The minimum input voltage rating may be exceeded if the input current rating is observed.

[3] The maximum input voltage should not exceed +6.5 V.

[4] The (absolute) maximum power dissipation depends on the junction temperature T_j. Higher power dissipation is allowed at lower ambient temperatures. The conditions to determine the specified values are T_{amb} = 85 °C and the use of a two layer PCB.

11. Recommended operating conditions

Table 7. Recommended operating conditions

Symbol	Parameter	Conditions	Min	Max	Unit
V_I	input voltage	VINT	3.0	5.5	V
		EN, ILIM	0	VINT	V
V_O	output voltage	VBUS; EN = LOW	0	30	V
T_{amb}	ambient temperature		–40	+85	°C

12. Thermal characteristics

Table 8. Thermal characteristics

Symbol	Parameter	Conditions		Typ	Unit
$R_{th(j-a)}$	thermal resistance from junction to ambient		[1]	82	K/W

[1] $R_{th(j-a)}$ is dependent upon board layout. To minimize $R_{th(j-a)}$, ensure that all pins have a solid connection to larger copper layer areas. In multi-layer PCBs, the second layer should be used to create a large heat spreader area below the device. Avoid using solder-stop varnish under the device.

All information provided in this document is subject to legal disclaimers.

© NXP Semiconductors N.V. 2015. All rights reserved.

13. Static characteristics

Table 9. Static characteristics

$V_{I(VINT)}$ = 4.0 V to 5.5 V; unless otherwise specified; Voltages are referenced to GND (ground = 0 V).

Symbol	Parameter	Conditions	T_{amb} = 25 °C			T_{amb} = −40 °C to +85 °C		Unit
			Min	Typ[1]	Max	Min	Max	
V_{IH}	HIGH-level input voltage	EN input	1.2	-	-	1.2	-	V
V_{IL}	LOW-level input voltage	EN input	-	-	0.4	-	0.4	V
V_O	output voltage	VDET; I_{VDET} = −2 mA; 3 V < VBUS < 30 V	1.5	-	5.5	1.5	5.5	V
V_{OL}	LOW-level output voltage	$\overline{FAULT}$, I_O = 8 mA	-	-	0.5	-	0.5	V
I_O	output current	Current source	-	10	-	8	15	mA
		EN = HIGH; $\overline{FAULT}$ = Hi-Z	-	-	I_{ocp}	-	I_{ocp}	mA
I_{ocp}	overcurrent protection current	EN = HIGH; see Figure 6	200	-	2000	-	-	mA
R_{pu}	pull-up resistance	$\overline{FAULT}$	20	-	200	-	-	kΩ
V_{pu}	pull-up voltage	$\overline{FAULT}$	-	-	VINT	-	VINT	V
R_{ILIM}	current limit resistance	ILIM	20	-	300	20	300	kΩ
I_{GND}	ground current	VBUS open; EN = LOW; see Figure 7 and Figure 8	-	20	-	-	40	μA
		VBUS open; EN = HIGH; see Figure 7 and Figure 8	-	220	-	-	360	μA
I_{OFF}	power-off leakage current	VBUS = 0 V to 30 V; VINT = 0 V; see Figure 9 [2]	-	2	-	-	20	μA
$I_{S(OFF)}$	OFF-state leakage current	VBUS = 0 V to 30 V; see Figure 10 and Figure 11 [2]	-	2	-	-	20	μA
V_{UVLO}	undervoltage lockout voltage		3.0	3.2	3.4	3.0	3.4	V
V_{OVLO}	overvoltage lockout voltage		5.5	5.9	6.25	5.5	6.25	V
$V_{hys(OVLO)}$	overvoltage lockout hysteresis voltage		-	150	-	-	-	mV
C_I	input capacitance	EN	-	2	-	-	-	pF
$C_{S(ON)}$	ON-state capacitance		-	-	1	-	1	nF

[1] Typical values are measured at T_{amb} = 25 °C and $V_{I(VINT)}$ = 5.0 V.

[2] Typical value is measured at T_{amb} = 25 °C and $V_{I(VBUS)}$ = 5.0 V.

All information provided in this document is subject to legal disclaimers.

© NXP Semiconductors N.V. 2015. All rights reserved.

13.1 Graphs

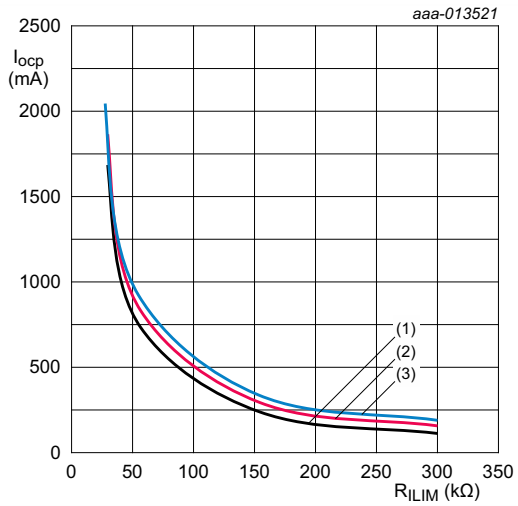

T_{amb} = 25 °C.

(1) Minimum

(2) Typical

(3) Maximum

Fig 6. Typical overcurrent protection current versus the external resistor value

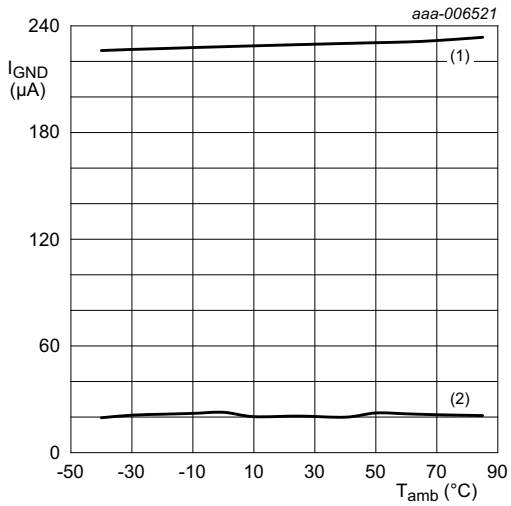

(1) Enabled

(2) Disabled

Fig 7. Typical ground current versus temperature

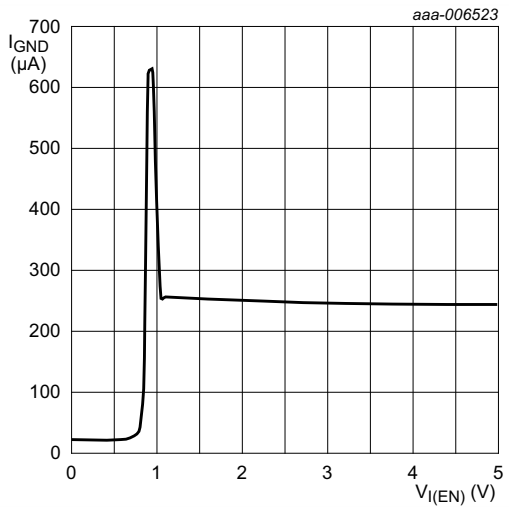

Fig 8. Typical ground current versus input voltage

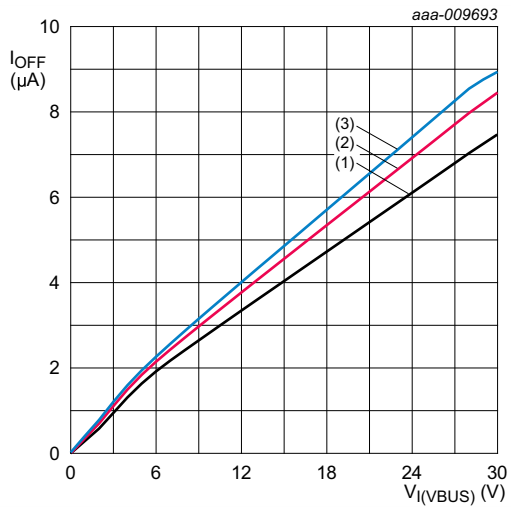

(1) T_{amb} = 85 °C

(2) T_{amb} = 25 °C

(3) T_{amb} = −40 °C

Fig 9. Typical power-off leakage current versus input voltage on pin VBUS

All information provided in this document is subject to legal disclaimers.

© NXP Semiconductors N.V. 2015. All rights reserved.

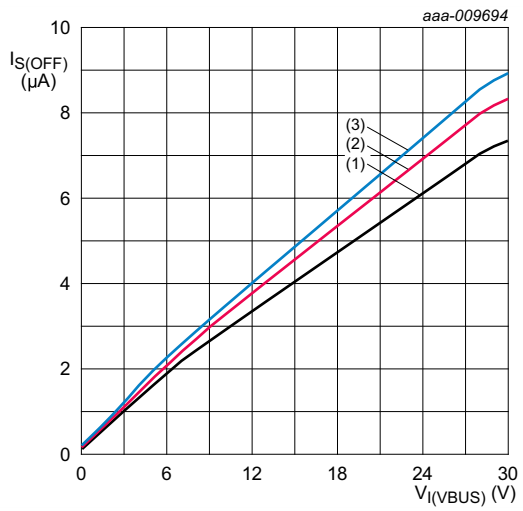

(1) T_{amb} = 85 °C

(2) T_{amb} = 25 °C

(3) T_{amb} = −40 °C

Fig 10. Typical OFF-state leakage current versus input voltage on pin VBUS

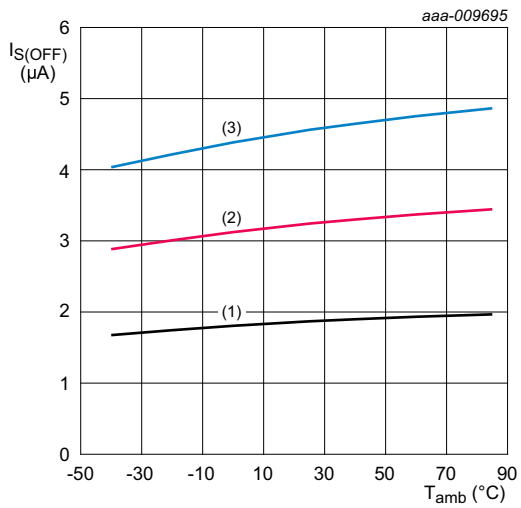

(1) $V_{I(VBUS)}$ = 5.0 V

(2) $V_{I(VBUS)}$ = 10.0 V

(3) $V_{I(VBUS)}$ = 15.0 V

Fig 11. Typical OFF-state leakage current versus temperature

13.2 ON resistance

Table 10. ON resistance

At recommended operating conditions; voltages are referenced to GND (ground = 0 V)

Symbol	Parameter	Conditions	T_{amb} = 25 °C			T_{amb} = −40 °C to +85 °C		Unit
			Min	Typ	Max	Min	Max	
R_{ON}	ON resistance	switch enabled; I_{LOAD} = 200 mA; see Figure 12, Figure 13 and Figure 14						
		$V_{I(VINT)}$ = 4.0 V to 5.5 V	-	60	-	-	100	mΩ

13.3 ON resistance test circuit and waveforms

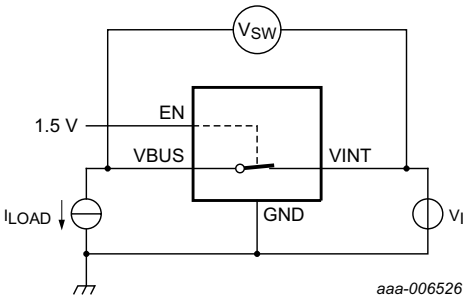

$R_{ON} = V_{SW} / I_{LOAD}$.

Fig 12. Test circuit for measuring ON resistance

All information provided in this document is subject to legal disclaimers.

© NXP Semiconductors N.V. 2015. All rights reserved.

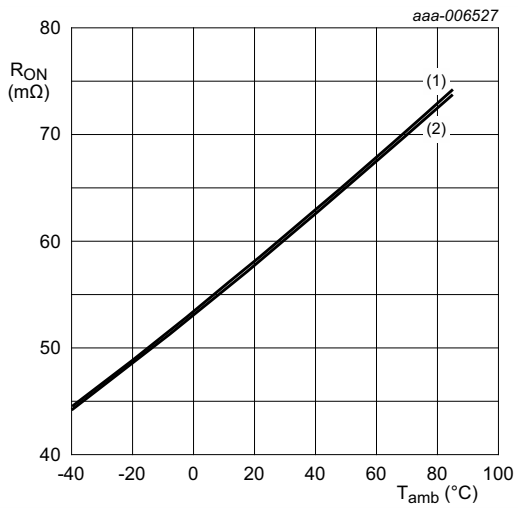

(1) $V_{I(VINT)}$ = 5.5 V

(2) $V_{I(VINT)}$ = 4.0 V

Fig 13. Typical ON resistance versus temperature

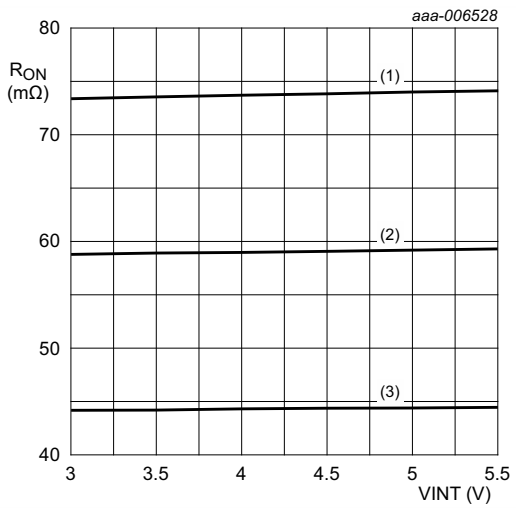

(1) T_{amb} = 85 °C

(2) T_{amb} = 25 °C

(3) T_{amb} = −40 °C

Fig 14. Typical ON resistance versus input voltage

14. Dynamic characteristics

Table 11. Dynamic characteristics

At recommended operating conditions; voltages are referenced to GND (ground = 0 V); for test circuit, see Figure 16.
$V_{I(VINT)}$ = 4.0 V to 5.5 V.

Symbol	Parameter	Conditions	T_{amb} = 25 °C			T_{amb} = −40 °C to +85 °C		Unit
			Min	Typ	Max	Min	Max	
t_{en}	enable time	EN to VBUS; see Figure 15	-	0.24	-	0.16	-	ms
t_{dis}	disable time	EN to VBUS; see Figure 15	-	1.5	-	-	-	ms
t_{on}	turn-on time	EN to VBUS; see Figure 15	-	0.63	-	0.52	-	ms
t_{off}	turn-off time	EN to VBUS; see Figure 15	-	34.5	-	-	-	ms
t_{TLH}	LOW to HIGH output transition time	VBUS; see Figure 15	-	0.39	-	0.16	-	ms
t_{THL}	HIGH to LOW output transition time	VBUS; see Figure 15	-	33	-	-	-	ms

All information provided in this document is subject to legal disclaimers.

© NXP Semiconductors N.V. 2015. All rights reserved.

14.1 Waveform and test circuits

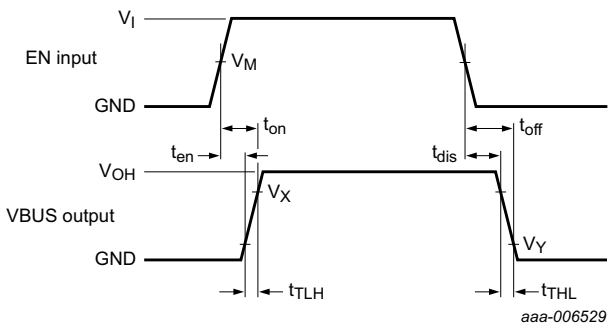

Measurement points are given in Table 12.

Logic level: V_{OH} is the typical output voltage that occurs with the output load.

Fig 15. Switching times

Table 12. Measurement points

Supply voltage	EN Input	Output	
$V_{I(VINT)}$	V_M	V_X	V_Y
4.0 V to 5.5 V	$0.5 \times V_I$	$0.9 \times V_{OH}$	$0.1 \times V_{OH}$

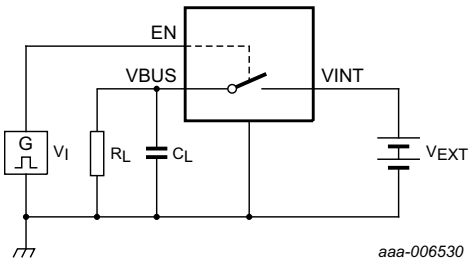

Test data is given in Table 13.

Definitions test circuit:

R_L = Load resistance.

C_L = Load capacitance including jig and probe capacitance.

V_{EXT} = External voltage for measuring switching times.

Fig 16. Test circuit for measuring switching times

Table 13. Test data

Supply voltage	Input	Load	
V_{EXT}	V_I	C_L	R_L
4.0 V to 5.5 V	1.5 V	100 μF	150 Ω

All information provided in this document is subject to legal disclaimers.

© NXP Semiconductors N.V. 2015. All rights reserved.

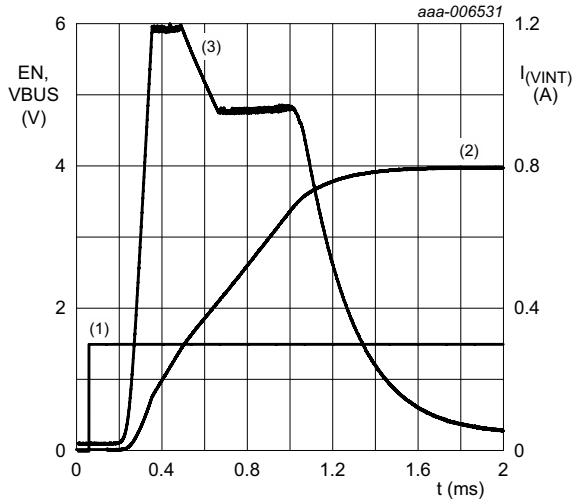

EN = 1.5 V; VINT = 4 V; R_L = 150 Ω; C_L = 220 μF; R_{ILIM} = 50 kΩ; T_{amb} = 25 °C.

(1) EN

(2) VBUS

(3) $I_{I(VINT)}$

Fig 17. Typical enable time and in-rush current

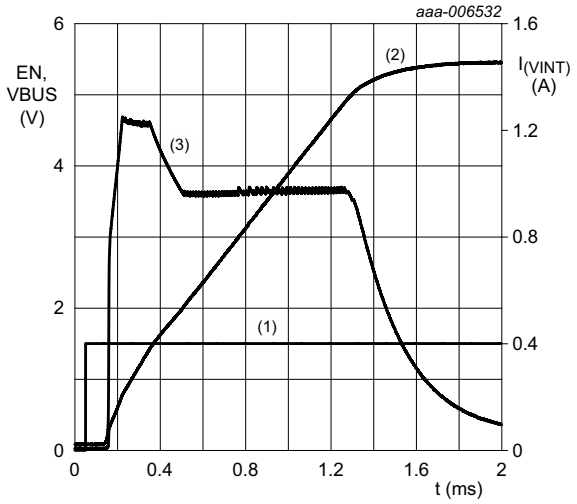

EN = 1.5 V; VINT = 5.5 V; R_L = 150 Ω; C_L = 220 μF; R_{ILIM} = 50 kΩ; T_{amb} = 25 °C.

(1) EN

(2) VBUS

(3) $I_{I(VINT)}$

Fig 18. Typical enable time and in-rush current

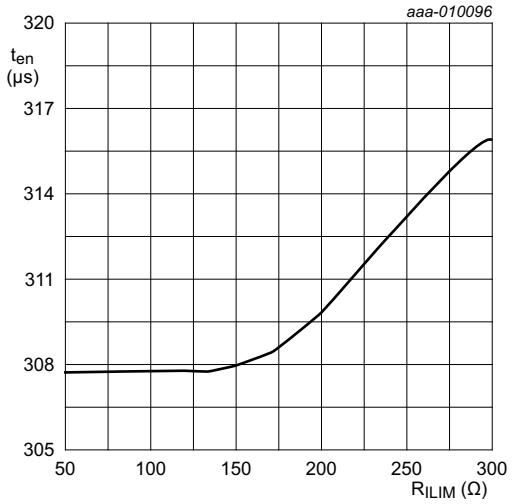

EN = 1.5 V; VINT = 4 V; R_L = 150 Ω; C_L = 100 μF; T_{amb} = 25 °C.

Fig 19. Typical enable time versus current limit resistance (R_{ILIM})

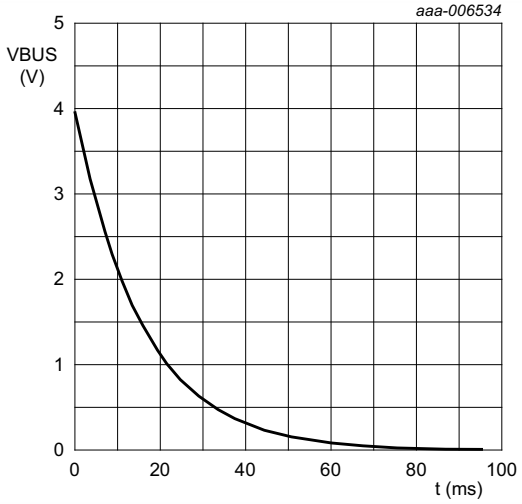

EN = 1.5 V; VINT = 4 V; R_L = 150 Ω; C_L = 100 μF; R_{ILIM} = 50 kΩ; T_{amb} = 25 °C.

Fig 20. Typical disable time

All information provided in this document is subject to legal disclaimers.

© NXP Semiconductors N.V. 2015. All rights reserved.

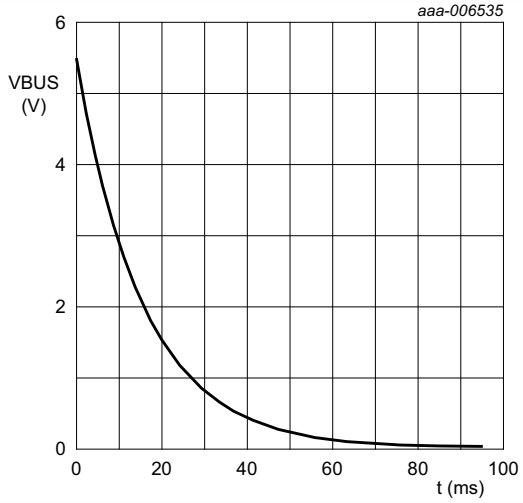

EN = 1.5 V; VINT = 5.5 V; R_L = 150 Ω; C_L = 100 μF; R_{ILIM} = 50 kΩ; T_{amb} = 25 °C.

Fig 21. Typical disable time

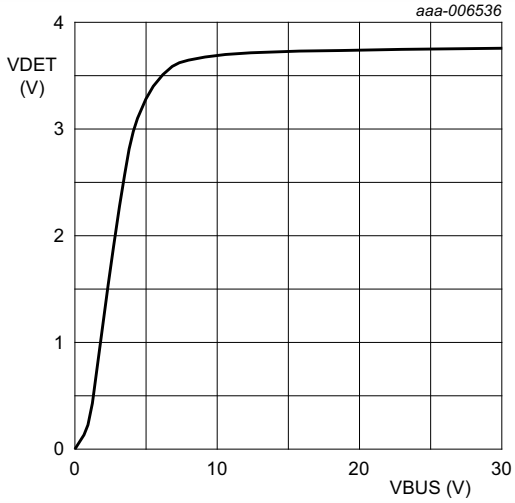

Fig 22. Typical VDET versus VBUS

All information provided in this document is subject to legal disclaimers.

© NXP Semiconductors N.V. 2015. All rights reserved.

15. Package outline

WLCSP9: wafer level chip-scale package;
9 bumps; body 1.36 x 1.36 x 0.51 mm (Backside coating included) **NX5P2190UK**

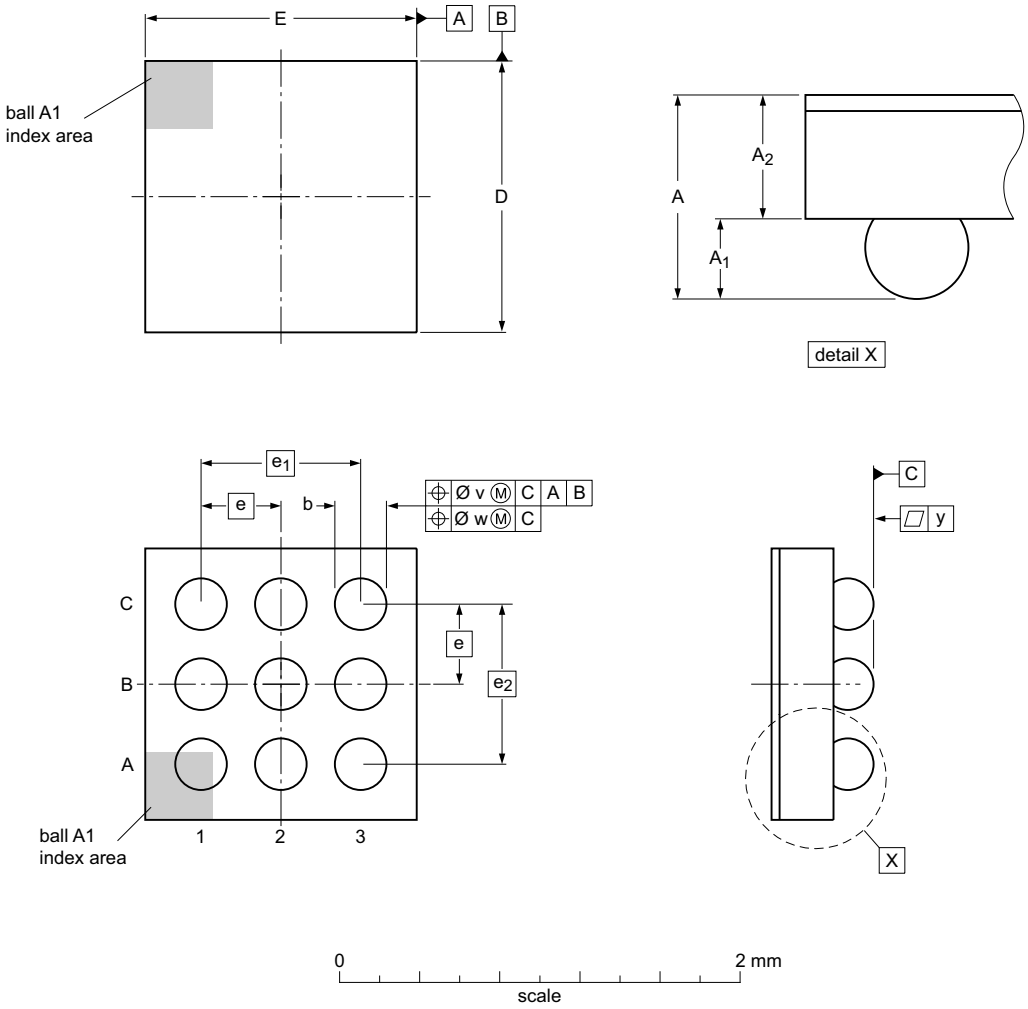

Dimensions (mm are the original dimensions)

Unit		A	A_1	A_2	b	D	E	e	e_1	e_2	v	w	y
mm	max	0.55	0.23	0.34	0.29	1.39	1.39						
	nom	0.51	0.20	0.31	0.26	1.36	1.36	0.4	0.8	0.8	0.05	0.015	0.03
	min	0.47	0.17	0.29	0.23	1.33	1.33						

nx5p2190uk_po

Outline version	References				European projection	Issue date
	IEC	JEDEC	JEITA			
NX5P2190UK						~~14-02-12~~ 14-02-14

Fig 23. Package outline WLCSP9 package

All information provided in this document is subject to legal disclaimers.

© NXP Semiconductors N.V. 2015. All rights reserved.

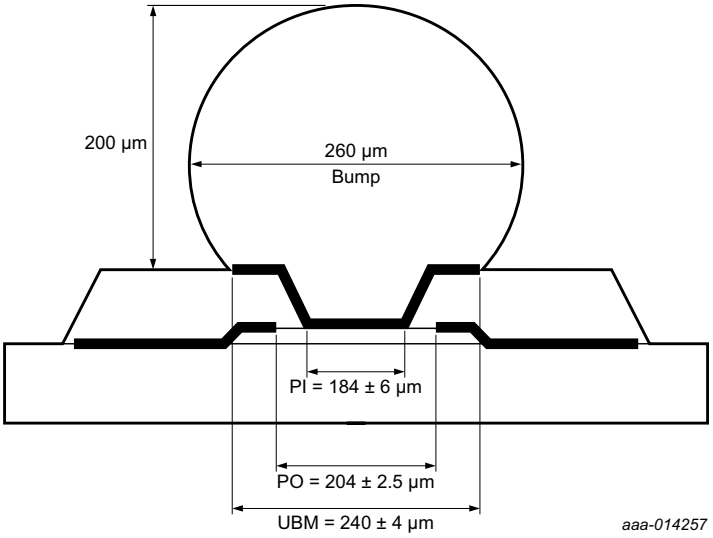

Fig 24. Ball dimensions WLCSP9 package

16. Abbreviations

Table 14. Abbreviations

Acronym	Description
CDM	Charged Device Model
DUT	Device Under Test
ESD	ElectroStatic Discharge
HBM	Human Body Model
MOSFET	Metal-Oxide Semiconductor Field Effect Transistor
OCP	OverCurrent Protection
OTP	OverTemperature Protection
RCP	Reverse Current Protection
USB OTG	Universal Serial Bus On-The-Go
UVLO	Under-voltage lockout
VBUS	USB Power Supply
OVLO	Over-voltage lockout

17. Revision history

Table 15. Revision history

Document ID	Release date	Data sheet status	Change notice	Supersedes
NX5P2190 v.1.1	20150115	Product data sheet	-	NX5P2190 v.1
Modifications:	• A text correction to the first paragraph on page 1.			
NX5P2190 v.1	20150113	Product data sheet	-	-

All information provided in this document is subject to legal disclaimers.

© NXP Semiconductors N.V. 2015. All rights reserved.

18. Legal information

18.1 Data sheet status

Document status[1][2]	Product status[3]	Definition
Objective [short] data sheet	Development	This document contains data from the objective specification for product development.
Preliminary [short] data sheet	Qualification	This document contains data from the preliminary specification.
Product [short] data sheet	Production	This document contains the product specification.

[1] Please consult the most recently issued document before initiating or completing a design.

[2] The term 'short data sheet' is explained in section "Definitions".

[3] The product status of device(s) described in this document may have changed since this document was published and may differ in case of multiple devices. The latest product status information is available on the Internet at URL http://www.nxp.com.

18.2 Definitions

Draft — The document is a draft version only. The content is still under internal review and subject to formal approval, which may result in modifications or additions. NXP Semiconductors does not give any representations or warranties as to the accuracy or completeness of information included herein and shall have no liability for the consequences of use of such information.

Short data sheet — A short data sheet is an extract from a full data sheet with the same product type number(s) and title. A short data sheet is intended for quick reference only and should not be relied upon to contain detailed and full information. For detailed and full information see the relevant full data sheet, which is available on request via the local NXP Semiconductors sales office. In case of any inconsistency or conflict with the short data sheet, the full data sheet shall prevail.

Product specification — The information and data provided in a Product data sheet shall define the specification of the product as agreed between NXP Semiconductors and its customer, unless NXP Semiconductors and customer have explicitly agreed otherwise in writing. In no event however, shall an agreement be valid in which the NXP Semiconductors product is deemed to offer functions and qualities beyond those described in the Product data sheet.

18.3 Disclaimers

Limited warranty and liability — Information in this document is believed to be accurate and reliable. However, NXP Semiconductors does not give any representations or warranties, expressed or implied, as to the accuracy or completeness of such information and shall have no liability for the consequences of use of such information. NXP Semiconductors takes no responsibility for the content in this document if provided by an information source outside of NXP Semiconductors.

In no event shall NXP Semiconductors be liable for any indirect, incidental, punitive, special or consequential damages (including - without limitation - lost profits, lost savings, business interruption, costs related to the removal or replacement of any products or rework charges) whether or not such damages are based on tort (including negligence), warranty, breach of contract or any other legal theory.

Notwithstanding any damages that customer might incur for any reason whatsoever, NXP Semiconductors' aggregate and cumulative liability towards customer for the products described herein shall be limited in accordance with the *Terms and conditions of commercial sale* of NXP Semiconductors.

Right to make changes — NXP Semiconductors reserves the right to make changes to information published in this document, including without limitation specifications and product descriptions, at any time and without notice. This document supersedes and replaces all information supplied prior to the publication hereof.

Suitability for use — NXP Semiconductors products are not designed, authorized or warranted to be suitable for use in life support, life-critical or safety-critical systems or equipment, nor in applications where failure or malfunction of an NXP Semiconductors product can reasonably be expected to result in personal injury, death or severe property or environmental damage. NXP Semiconductors and its suppliers accept no liability for inclusion and/or use of NXP Semiconductors products in such equipment or applications and therefore such inclusion and/or use is at the customer's own risk.

Applications — Applications that are described herein for any of these products are for illustrative purposes only. NXP Semiconductors makes no representation or warranty that such applications will be suitable for the specified use without further testing or modification.

Customers are responsible for the design and operation of their applications and products using NXP Semiconductors products, and NXP Semiconductors accepts no liability for any assistance with applications or customer product design. It is customer's sole responsibility to determine whether the NXP Semiconductors product is suitable and fit for the customer's applications and products planned, as well as for the planned application and use of customer's third party customer(s). Customers should provide appropriate design and operating safeguards to minimize the risks associated with their applications and products.

NXP Semiconductors does not accept any liability related to any default, damage, costs or problem which is based on any weakness or default in the customer's applications or products, or the application or use by customer's third party customer(s). Customer is responsible for doing all necessary testing for the customer's applications and products using NXP Semiconductors products in order to avoid a default of the applications and the products or of the application or use by customer's third party customer(s). NXP does not accept any liability in this respect.

Limiting values — Stress above one or more limiting values (as defined in the Absolute Maximum Ratings System of IEC 60134) will cause permanent damage to the device. Limiting values are stress ratings only and (proper) operation of the device at these or any other conditions above those given in the Recommended operating conditions section (if present) or the Characteristics sections of this document is not warranted. Constant or repeated exposure to limiting values will permanently and irreversibly affect the quality and reliability of the device.

Terms and conditions of commercial sale — NXP Semiconductors products are sold subject to the general terms and conditions of commercial sale, as published at http://www.nxp.com/profile/terms, unless otherwise agreed in a valid written individual agreement. In case an individual agreement is concluded only the terms and conditions of the respective agreement shall apply. NXP Semiconductors hereby expressly objects to applying the customer's general terms and conditions with regard to the purchase of NXP Semiconductors products by customer.

No offer to sell or license — Nothing in this document may be interpreted or construed as an offer to sell products that is open for acceptance or the grant, conveyance or implication of any license under any copyrights, patents or other industrial or intellectual property rights.

All information provided in this document is subject to legal disclaimers.

© NXP Semiconductors N.V. 2015. All rights reserved.

Export control — This document as well as the item(s) described herein may be subject to export control regulations. Export might require a prior authorization from competent authorities.

Non-automotive qualified products — Unless this data sheet expressly states that this specific NXP Semiconductors product is automotive qualified, the product is not suitable for automotive use. It is neither qualified nor tested in accordance with automotive testing or application requirements. NXP Semiconductors accepts no liability for inclusion and/or use of non-automotive qualified products in automotive equipment or applications.

In the event that customer uses the product for design-in and use in automotive applications to automotive specifications and standards, customer (a) shall use the product without NXP Semiconductors' warranty of the product for such automotive applications, use and specifications, and (b) whenever customer uses the product for automotive applications beyond NXP Semiconductors' specifications such use shall be solely at customer's own risk, and (c) customer fully indemnifies NXP Semiconductors for any liability, damages or failed product claims resulting from customer design and use of the product for automotive applications beyond NXP Semiconductors' standard warranty and NXP Semiconductors' product specifications.

Translations — A non-English (translated) version of a document is for reference only. The English version shall prevail in case of any discrepancy between the translated and English versions.

18.4 Trademarks

Notice: All referenced brands, product names, service names and trademarks are the property of their respective owners.

19. Contact information

For more information, please visit: **http://www.nxp.com**

For sales office addresses, please send an email to: **salesaddresses@nxp.com**

All information provided in this document is subject to legal disclaimers.

© NXP Semiconductors N.V. 2015. All rights reserved.

20. Contents

1 General description 1
2 Features and benefits 1
3 Applications 2
4 Ordering information 2
5 Marking 2
6 Functional diagram 2
7 Pinning information 3
7.1 Pinning 3
7.2 Pin description 4
8 Functional description 4
8.1 EN input 5
8.2 Under-voltage lockout (UVLO) 5
8.3 Over-voltage lockout (OVLO) 5
8.4 ILIM 5
8.5 Over-current protection (OCP) 5
8.6 Over-temperature protection (OTP) 5
8.7 Reverse bias current/back drive protection (RCP) 6
8.8 FAULT output 6
8.9 VDET output 6
8.10 In-rush current protection 6
9 Application diagram 7
10 Limiting values 8
11 Recommended operating conditions 8
12 Thermal characteristics 8
13 Static characteristics 9
13.1 Graphs 10
13.2 ON resistance 11
13.3 ON resistance test circuit and waveforms . . . 11
14 Dynamic characteristics 12
14.1 Waveform and test circuits 13
15 Package outline 16
16 Abbreviations 17
17 Revision history 17
18 Legal information 18
18.1 Data sheet status 18
18.2 Definitions 18
18.3 Disclaimers 18
18.4 Trademarks 19
19 Contact information 19
20 Contents 20

Please be aware that important notices concerning this document and the product(s) described herein, have been included in section 'Legal information'.

© NXP Semiconductors N.V. 2015. All rights reserved.

For more information, please visit: http://www.nxp.com
For sales office addresses, please send an email to: salesaddresses@nxp.com

Date of release: 15 January 2015
Document identifier: NX5P2190

Looking for pricing, stock, or lifecycle information?

Click below to explore more details on WIN SOURCE:

- View NX5P2190UKZ on WIN SOURCE
- NXP / Nexperia Information

Optimize Your Supply Chain with WIN SOURCE Solutions

- Global Sourcing Solution
- Obsolete Management
- Cost Control Management
- Shortage Management
- Alternative Solution
- Excess Inventory Management