THE DATASHEET OF

STEVAL-CBL004V1

www.win-source.net 0086-755-83957316

STEVAL-CBL004V1

Power supply demonstration board for LNB based on the LNBH24

Data brief

Features

- Complete interface between LNBs and I^2C bus
- Built-in DC-DC converter for single 12 V supply operation (8 - 15 volt V_{in} range) and high efficiency (typ. 93%@0.5 A)
- Compliant with main satellite receiver output voltage specifications
- Accurate 22 kHz tone generator supports bidirectional DiSEqC™ 2.0 and meets widely accepted standards (patent pending)
- Fast oscillator startup facilitates DiSEqC™ encoding
- Overload and overtemperature internal protection with I^2C diagnostic bits
- Output voltage and output current level diagnostic feedback through I^2C bits
- LNB short-circuit dynamic protection
- +/- 4 kV ESD tolerant on output power pins
- RoHS compliant

STEVAL-CBL004V1

Description

The STEVAL-CBL004V1 demonstration board implements a DC-DC converter based on the LNBH24 dual LNB supply and control IC with step-up and I^2C interface.

This simple, cost-effective design represents an integrated solution for supplying/interfacing two independent LNB down-converters in satellite antenna dishes. It provides good performance with a minimum of external components.

The STEVAL-CBL004V1 includes all the functions needed for the design of dual tuner STBs, with supplying/interfacing functions that are compliant with the international standards.

It features an I^2C bus interface and, thanks to the fully integrated step-up DC-DC converter, it works with a single input voltage supply in the range of 8 V to 15 V.

Obsolete Product(s) - Obsolete Product(s)

For further information contact your local STMicroelectronics sales office. www.st.com

1 Schematic diagram

Figure 1. STEVAL-CBL004V1 circuit schematic

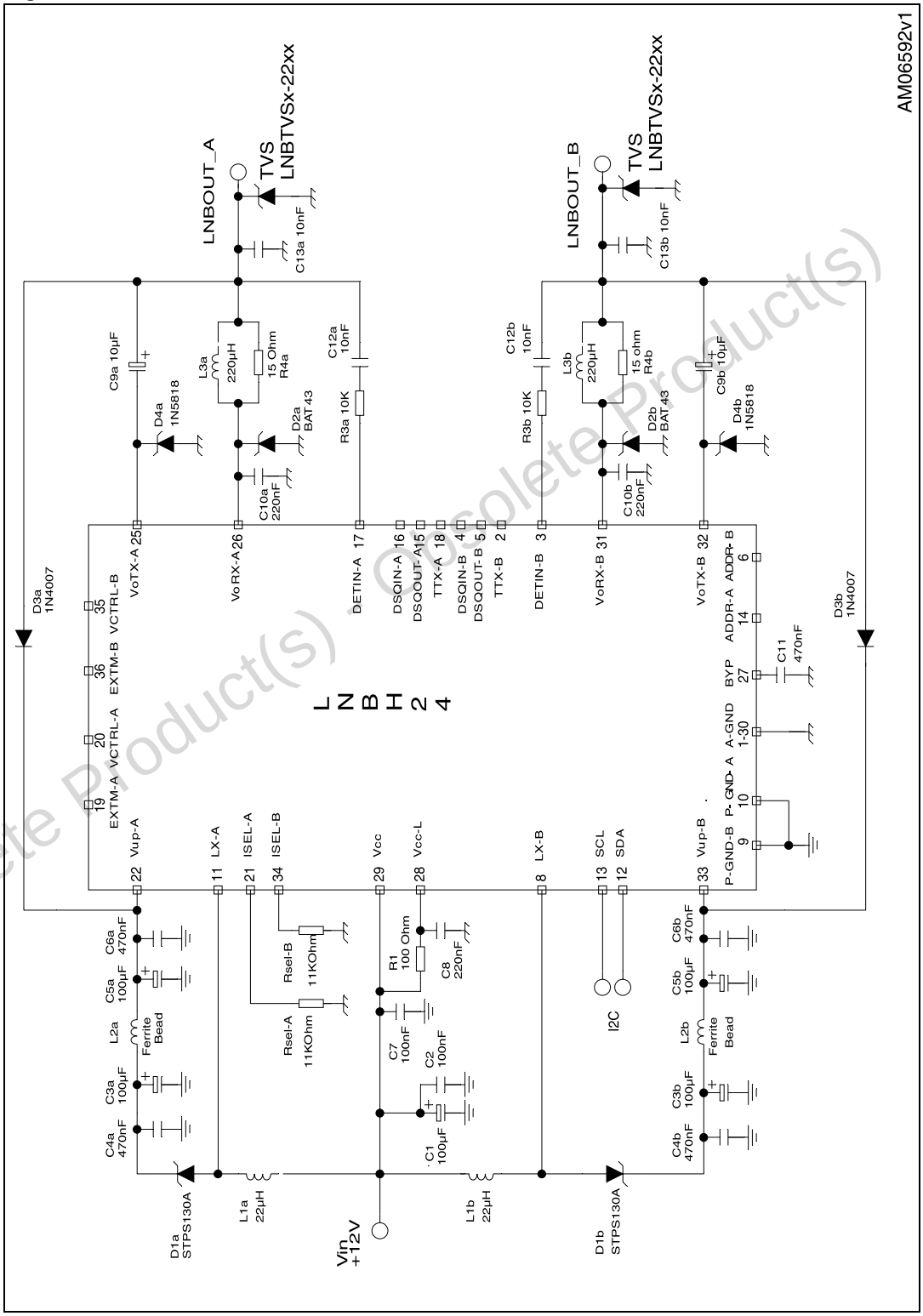

Obsolete Product(s) - Obsolete Product(s)

2 Revision history

Table 1. Document revision history

Date	Revision	Changes
26-Apr-2010	1	Initial release.

Obsolete Product(s) - Obsolete Product(s)

Please Read Carefully:

Information in this document is provided solely in connection with ST products. STMicroelectronics NV and its subsidiaries (“ST”) reserve the right to make changes, corrections, modifications or improvements, to this document, and the products and services described herein at any time, without notice.

All ST products are sold pursuant to ST’s terms and conditions of sale.

Purchasers are solely responsible for the choice, selection and use of the ST products and services described herein, and ST assumes no liability whatsoever relating to the choice, selection or use of the ST products and services described herein.

No license, express or implied, by estoppel or otherwise, to any intellectual property rights is granted under this document. If any part of this document refers to any third party products or services it shall not be deemed a license grant by ST for the use of such third party products or services, or any intellectual property contained therein or considered as a warranty covering the use in any manner whatsoever of such third party products or services or any intellectual property contained therein.

UNLESS OTHERWISE SET FORTH IN ST’S TERMS AND CONDITIONS OF SALE ST DISCLAIMS ANY EXPRESS OR IMPLIED WARRANTY WITH RESPECT TO THE USE AND/OR SALE OF ST PRODUCTS INCLUDING WITHOUT LIMITATION IMPLIED WARRANTIES OF MERCHANTABILITY, FITNESS FOR A PARTICULAR PURPOSE (AND THEIR EQUIVALENTS UNDER THE LAWS OF ANY JURISDICTION), OR INFRINGEMENT OF ANY PATENT, COPYRIGHT OR OTHER INTELLECTUAL PROPERTY RIGHT.

UNLESS EXPRESSLY APPROVED IN WRITING BY AN AUTHORIZED ST REPRESENTATIVE, ST PRODUCTS ARE NOT RECOMMENDED, AUTHORIZED OR WARRANTED FOR USE IN MILITARY, AIR CRAFT, SPACE, LIFE SAVING, OR LIFE SUSTAINING APPLICATIONS, NOR IN PRODUCTS OR SYSTEMS WHERE FAILURE OR MALFUNCTION MAY RESULT IN PERSONAL INJURY, DEATH, OR SEVERE PROPERTY OR ENVIRONMENTAL DAMAGE. ST PRODUCTS WHICH ARE NOT SPECIFIED AS "AUTOMOTIVE GRADE" MAY ONLY BE USED IN AUTOMOTIVE APPLICATIONS AT USER’S OWN RISK.

Resale of ST products with provisions different from the statements and/or technical features set forth in this document shall immediately void any warranty granted by ST for the ST product or service described herein and shall not create or extend in any manner whatsoever, any liability of ST.

ST and the ST logo are trademarks or registered trademarks of ST in various countries.

Information in this document supersedes and replaces all information previously supplied.

The ST logo is a registered trademark of STMicroelectronics. All other names are the property of their respective owners.

© 2010 STMicroelectronics - All rights reserved

STMicroelectronics group of companies

Australia - Belgium - Brazil - Canada - China - Czech Republic - Finland - France - Germany - Hong Kong - India - Israel - Italy - Japan - Malaysia - Malta - Morocco - Philippines - Singapore - Spain - Sweden - Switzerland - United Kingdom - United States of America

www.st.com

Obsolete Product(s) - Obsolete Product(s)

Looking for pricing, stock, or lifecycle information?

Click below to explore more details on WIN SOURCE:

- View STEVAL-CBL004V1 on WIN SOURCE
- STMicroelectronics Information

Optimize Your Supply Chain with WIN SOURCE Solutions

- Global Sourcing Solution
- Obsolete Management
- Cost Control Management
- Shortage Management
- Alternative Solution
- Excess Inventory Management