THE DATASHEET OF

BUF20800AIDCPR

www.win-source.net 0086-755-83957316

Burr-Brown Products from Texas Instruments

BUF20800

SBOS329E − JUNE 2005 − REVISED DECEMBER 2007

18-Channel GAMMA VOLTAGE GENERATOR with Two Programmable V_{COM} Channels

FEATURES

- 18-CHANNEL GAMMA CORRECTION
- 2-CHANNEL PROGRAMMABLE V_{COM}: 100mA I_{OUT}
- 10-BIT RESOLUTION
- RAIL-TO-RAIL OUTPUT
- LOW SUPPLY CURRENT: 900µA/ch
- SUPPLY VOLTAGE: 7V to 18V
- DIGITAL SUPPLY: 2.0V to 5.5V
- INDUSTRY-STANDARD, TWO-WIRE INTERFACE: 3.4MHz High-Speed Mode
- HIGH ESD RATING: 4kV HBM, 1kV CDM, 200V MM
- DEMO BOARD AND SOFTWARE AVAILABLE

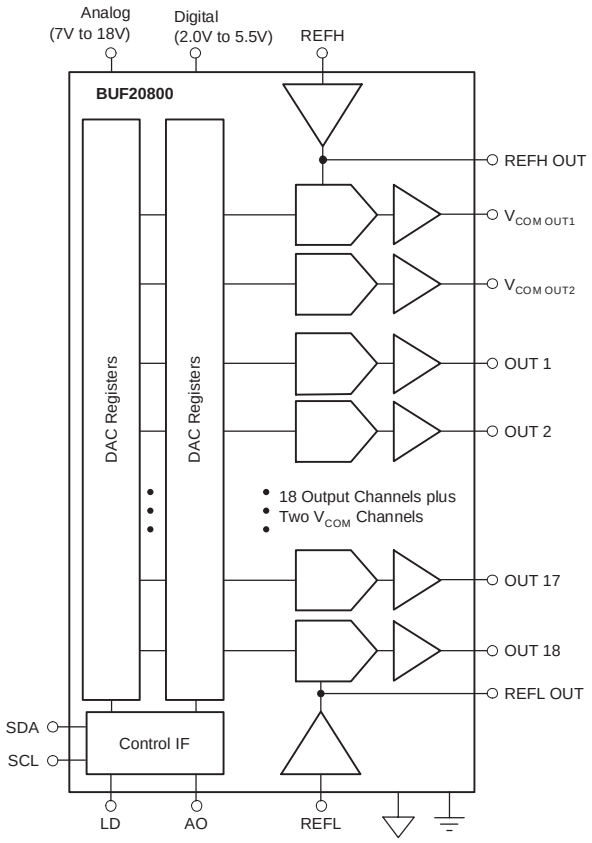

APPLICATIONS

- REPLACES RESISTOR-BASED GAMMA SOLUTIONS
- TFT-LCD REFERENCE DRIVERS
- DYNAMIC GAMMA CONTROL

DESCRIPTION

The BUF20800 is a programmable voltage reference generator designed for gamma correction in TFT-LCD panels. It provides 18 programmable outputs for gamma correction and two channels for V_{COM} adjustment, each with 10-bit resolution.

This programmability replaces the traditional, time-consuming process of changing resistor values to optimize the various gamma voltages and allows designers to determine the correct gamma voltages for a panel very quickly. Required changes can also be easily implemented without hardware changes.

The BUF20800 uses TI's latest, small-geometry analog CMOS process, which makes it a very competitive choice for full production, not just evaluation.

Programming of each output occurs through an industry-standard, two-wire serial interface. Unlike existing programmable buffers, the BUF20800 offers a high-speed mode that allows clock speeds up to 3.4MHz.

For lower channel count, please contact your local sales or marketing representative.

The BUF20800 is available in an HTSSOP-38 PowerPAD™ package. It is specified from −40°C to +85°C.

BUF20800 RELATED PRODUCTS

FEATURES	PRODUCT
18-Channel Programmable, Two V_{COM} + OTP Memory	BUF20820
12-Channel Programmable Buffer, 10-Bit	BUF12800
Programmable V_{COM}	BUF01900
11-, 6-, 4-Channel Gamma Correction Buffer, 18V Supply	BUFxx704
High-Speed V_{COM}, 1 and 2 Channels	SN10501
Complete LCD DC/DC Solution	TPS65100

Please be aware that an important notice concerning availability, standard warranty, and use in critical applications of Texas Instruments semiconductor products and disclaimers thereto appears at the end of this data sheet.

PowerPAD is a registered trademark of Texas Instruments. All other trademarks are the property of their respective owners.

PRODUCTION DATA information is current as of publication date. Products conform to specifications per the terms of Texas Instruments standard warranty. Production processing does not necessarily include testing of all parameters.

Copyright © 2005−2007, Texas Instruments Incorporated

This integrated circuit can be damaged by ESD. Texas Instruments recommends that all integrated circuits be handled with appropriate precautions. Failure to observe proper handling and installation procedures can cause damage.

ESD damage can range from subtle performance degradation to complete device failure. Precision integrated circuits may be more susceptible to damage because very small parametric changes could cause the device not to meet its published specifications.

ABSOLUTE MAXIMUM RATINGS(1)

Supply Voltage, V_S	+19V
Supply Voltage, V_{SD}	+6V
Signal Input Terminals, SCL, SDA, AO, LD:	
Voltage	−0.5V to +6V
Current	±10mA
Output Short Circuit(2)	Continuous
Operating Temperature	−40°C to +95°C
Storage Temperature	−65°C to +150°C
Junction Temperature	+125°C
ESD Rating:	
Human Body Model (HBM)	4kV
Charged-Device Model (CDM)	1kV
Machine Model (MM)	200V

(1) Stresses above these ratings may cause permanent damage. Exposure to absolute maximum conditions for extended periods may degrade device reliability. These are stress ratings only, and functional operation of the device at these or any other conditions beyond those specified is not supported.

(2) Short-circuit to ground, one amplifier per package.

ORDERING INFORMATION(1)

PRODUCT	PACKAGE-LEAD	PACKAGE DESIGNATOR	PACKAGE MARKING
BUF20800	HTSSOP-38	DCP	BUF20800

(1) For the most current package and ordering information, see the Package Option Addendum at the end of this document, or see the TI web site at www.ti.com.

ELECTRICAL CHARACTERISTICS

Boldface limits apply over the specified temperature range, **T_A = −40°C to +85°C.**

At T_A = +25°C, V_S = 18V, V_{SD} = 5V, R_L = 1.5kΩ connected to ground, and C_L = 200pF, unless otherwise noted.

PARAMETER		CONDITIONS	BUF20800 MIN	BUF20800 TYP	BUF20800 MAX	UNIT
ANALOG						
Gamma Output Swing—High		**OUT 1−9, Sourcing 10mA, V_{REFH} = 17.8V, Code 1023**	**17.7**	**17.8**		**V**
		OUT 10−18, Sourcing 10mA, V_{REFH} = 17.8V, Code 1023	**17.0**	**17.2**		**V**
Gamma Output Swing—Low		**OUT 1−9, Sinking 10mA, V_{REFL} = 0.2V, Code 00**		**0.6**	**1.0**	**V**
		OUT 10−18, Sinking 10mA, V_{REFL} = 0.2V, Code 00		**0.2**	**0.3**	**V**
V_{COM} Buffer Output Swing—High		**V_{COM}, Sourcing 100mA, V_{REFH} = 17.8V**	**13**	**15.5**		**V**
V_{COM} Buffer Output Swing—Low		**V_{COM}, Sinking 100mA, V_{REFL} = 0.2V**		**1**	**2.0**	**V**
Output Current(1)	I_O	All Channels, Code 512, Sinking/Sourcing	40	45		mA
REFH Input Range(2)			4		V_S	V
REFL Input Range(2)			GND		V_S − 4	V
Integral Nonlinearity	INL	No Load, V_{REFH} = 17V, V_{REFL} = 1V		0.3	1.5	Bits
Differential Nonlinearity	DNL	No Load, V_{REFH} = 17V, V_{REFL} = 1V		0.3	1	Bits
Gain Error				0.12		%
Program to Out Delay	t_D			5		µs
Output Accuracy		No Load, V_{REFH} = 17V, V_{REFL} = 1V		±20	±50	mV
Over Temperature				±25		mV
Input Resistance at V_{REFH} and V_{REFL}	R_{INH}			100		MΩ
Load Regulation, All References	REG	V_{OUT} = V_S/2, I_{OUT} = +5mA to −5mA Step		0.5	1.5	mV/mA
40mA, All Channels		V_{OUT} = V_S/2, $I_{SINKING}$ = 40mA, $I_{SOURCING}$ = 40mA		0.5	1.5	mV/mA
ANALOG POWER SUPPLY						
Operating Range	V_S		7		18	V
Total Analog Supply Current	I_S	No Load		18	28	mA
over Temperature					**28**	**mA**
DIGITAL						
Logic 1 Input Voltage	V_{IH}		0.7 × V_{SD}			V
Logic 0 Input Voltage	V_{IL}				0.3 × V_{SD}	V
Logic 0 Output Voltage	V_{OL}	I_{SINK} = 3mA		0.15	0.4	V
Input Leakage				±0.01	±10	µA
Clock Frequency	**f_{CLK}**	**Standard/Fast Mode**			**400**	**kHz**
		High-Speed Mode			**3.4**	**MHz**
DIGITAL POWER SUPPLY						
Operating Voltage Range	V_{SD}		2.0		5.5	V
Digital Supply Current(3)	I_{SD}	Outputs at Reset Values, No-Load, Two-Wire Bus Inactive		25	50	µA
over Temperature				**100**		**µA**
TEMPERATURE						
Specified Temperature Range			−40		+85	°C
Operating Temperature Range		Junction Temperature < +125°C	−40		+95	°C
Storage Temperature Range			−65		+150	°C
Thermal Resistance, HTSSOP-38						
Junction-to-Ambient	θ_{JA}			30		°C/W
Junction-to-Case	θ_{JC}			15		°C/W

(1) See typical characteristic *Output Voltage vs Output Current*.
(2) See applications information section *REFH and REFL Input Range*.
(3) See typical characteristic *Digital Supply Current vs Temperature*.

PIN CONFIGURATIONS

Top View **HTSSOP**

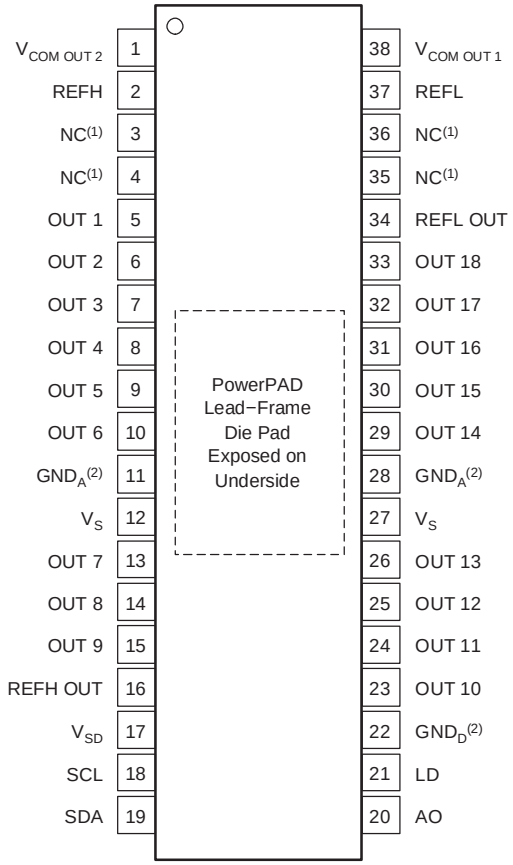

(1) NC denotes no connection.
(2) GND_D and GND_A are internally connected and must be at the same voltage potential.

TYPICAL CHARACTERISTICS

At T_A = +25°C, V_S = 18V, V_{SD} = 5V, V_{REFH} = 17V, V_{REFL} = 1V, R_L = 1.5kΩ connected to ground, and C_L = 200pF, unless otherwise noted.

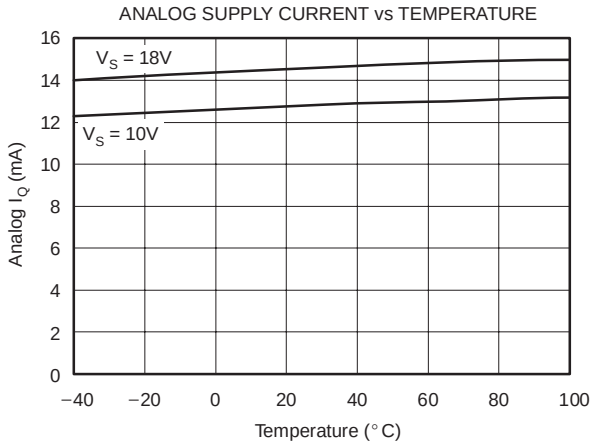

Figure 1

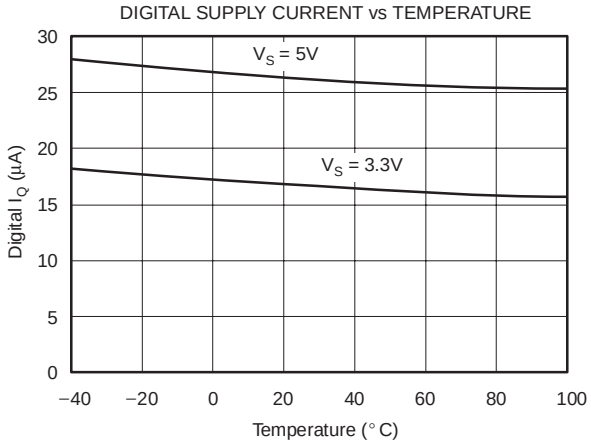

Figure 2

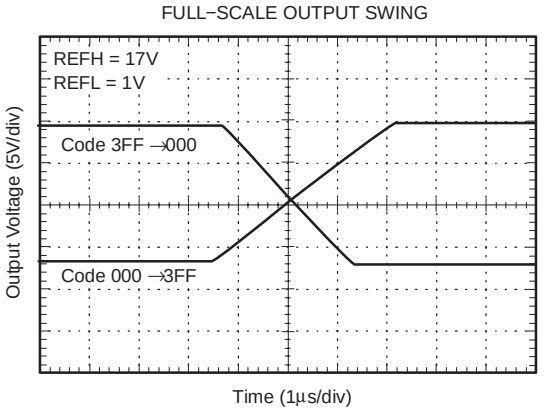

Figure 3

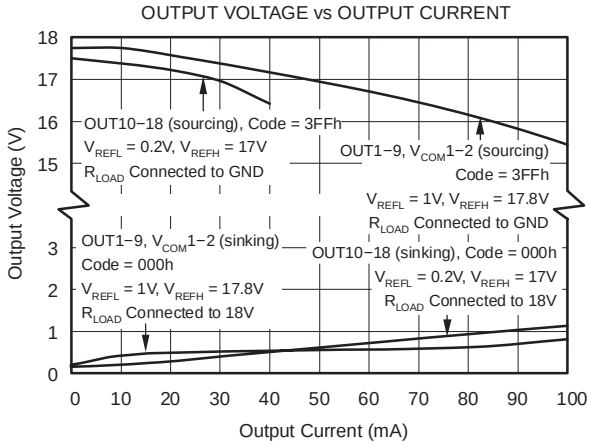

Figure 4

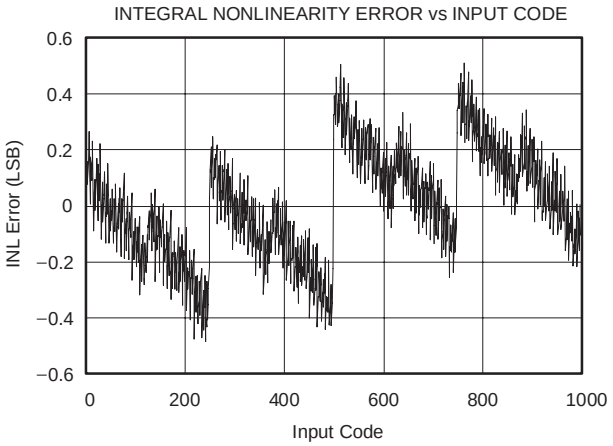

Figure 5

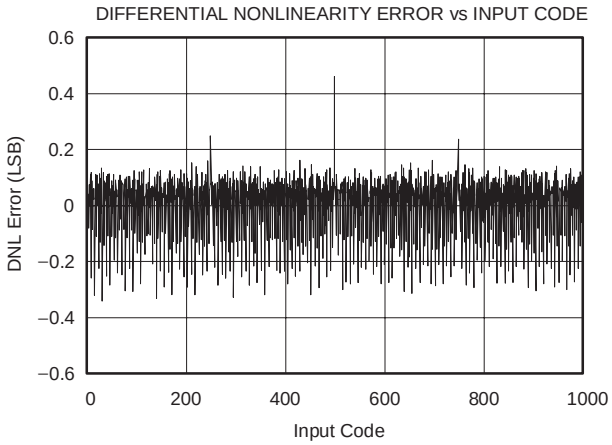

Figure 6

APPLICATIONS INFORMATION

The BUF20800 programmable voltage reference allows fast, easy adjustment of 18 programmable reference outputs and two channels for V_{COM} adjustment, each with 10-bit resolution. It offers very simple, time-efficient adjustment of the gamma reference and V_{COM} voltages. The BUF20800 is programmed through a high-speed, standard, two-wire interface. The BUF20800 features a double-register structure for each DAC channel to simplify the implementation of dynamic gamma control. This structure allows pre-loading of register data and rapid updating of all channels simultaneously.

Buffers 1−9 are able to swing to within 200mV of the positive supply rail, and to within 0.6V of the negative supply rail. Buffers 10−18 are able to swing to within 0.8V of the positive supply rail and to within 200mV of the negative supply rail.

The BUF20800 can be powered using an analog supply voltage from 7V to 18V, and a digital supply from 2V to 5.5V. The digital supply must be applied prior to or simultaneously with the analog supply to avoid excessive current and power consumption; damage to the device may occur if it is left connected only to the analog supply for extended periods of time. Figure 7 shows the power supply timing requirements.

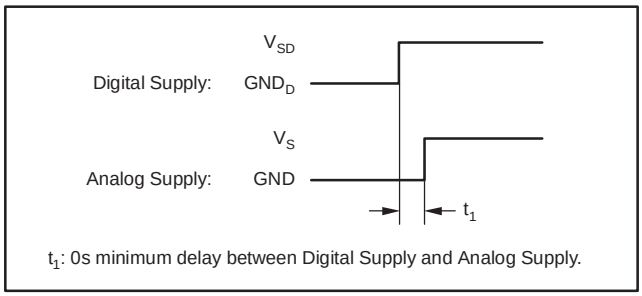

Figure 7. Power Supply Timing Requirements

Figure 8 shows the BUF20800 in a typical configuration. In this configuration, the BUF20800 device address is 74h. The output of each digital-to-analog converter (DAC) is immediately updated as soon as data are received in the corresponding register (LD = 0). For maximum dynamic range, set $V_{REFH} = V_S - 0.2V$ and $V_{REFL} = GND + 0.2V$.

TWO-WIRE BUS OVERVIEW

The BUF20800 communicates through an industry-standard, two-wire interface to receive data in slave mode. This standard uses a two-wire, open-drain interface that supports multiple devices on a single bus. Bus lines are driven to a logic low level only. The device that initiates the communication is called a master, and the devices controlled by the master are slaves. The master generates the serial clock on the clock signal line (SCL), controls the bus access, and generates the START and STOP conditions.

To address a specific device, the master initiates a START condition by pulling the data signal line (SDA) from a HIGH to a LOW logic level while SCL is HIGH. All slaves on the bus shift in the slave address byte, with the last bit indicating whether a read or write operation is intended. During the 9th clock pulse, the slave being addressed responds to the master by generating an Acknowledge and pulling SDA LOW.

Data transfer is then initiated and eight bits of data are sent followed by an Acknowledge Bit. During data transfer, SDA must remain stable while SCL is HIGH. Any change in SDA while SCL is HIGH will be interpreted as a START or STOP condition.

Once all data has been transferred, the master generates a STOP condition indicated by pulling SDA from LOW to HIGH while SCL is HIGH.

The BUF20800 can act only as a slave device; therefore, it never drives SCL. SCL is only an input for the BUF20800. Table 1 and Table 2 summarize the address and command codes, respectively, for the BUF20800.

ADDRESSING THE BUF20800

The address of the BUF20800 is 111010x, where *x* is the state of the A0 pin. When the A0 pin is LOW, the device will acknowledge on address 74h (1110100). If the A0 pin is HIGH, the device will acknowledge on address 75h (1110101).

Other valid addresses are possible through a simple mask change. Contact your TI representative for information.

Table 1. Quick-Reference Table of BUF20800 Addresses

DEVICE/COMPONENT	ADDRESS
BUF20800 Address:	
A0 pin is LOW (device will acknowledge on address 74h)	1110100
A0 pin is HIGH (device will acknowledge on address 75h)	1110101

Table 2. Quick-Reference Table of Command Codes

COMMAND	CODE
General Call Reset	Address byte of 00h followed by a data byte of 06h.
High-Speed Mode	00001xxx, with SCL ≤ 400kHz; where *xxx* are bits unique to the Hs-capable master. This byte is called the Hs master code.

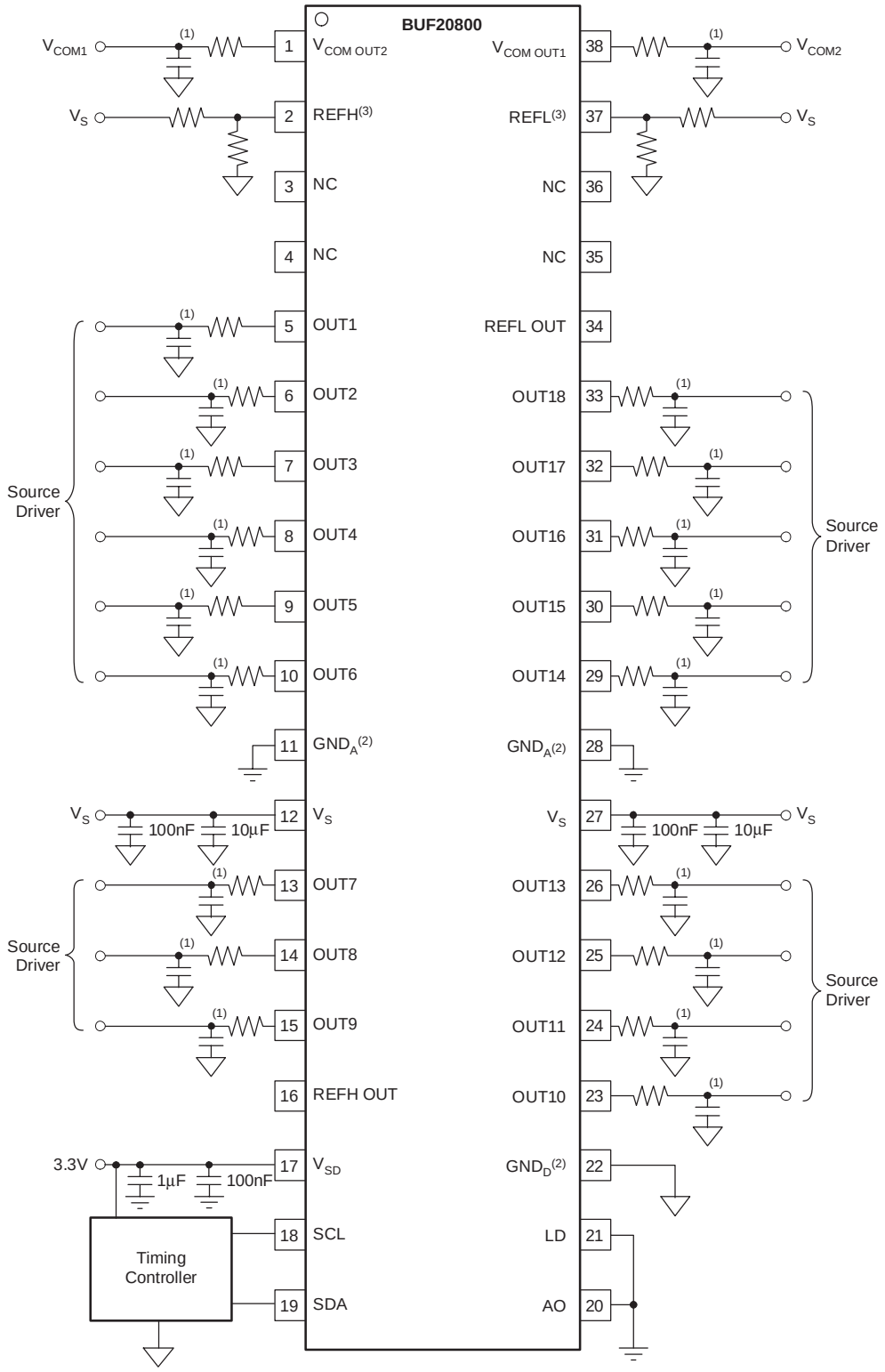

(1) RC combination optional.
(2) GND_A and GND_D must be connected together.
(3) Connecting a capacitor to this node is not recommended.

Figure 8. Typical Application Configuration

DATA RATES

The two-wire bus operates in one of three speed modes:

- Standard: allows a clock frequency of up to 100kHz;
- Fast: allows a clock frequency of up to 400kHz; and
- High-speed mode (or Hs mode): allows a clock frequency of up to 3.4MHz.

The BUF20800 is fully compatible with all three modes. No special action is required to use the device in Standard or Fast modes, but High-speed mode must be activated. To activate High-speed mode, send a special address byte of 00001xxx, with SCL = 400kHz, following the START condition; *xxx* are bits unique to the Hs-capable master, which can be any value. This byte is called the Hs master code. (Note that this is different from normal address bytes—the low bit does not indicate read/write status.) The BUF20800 will respond to the High-speed command regardless of the value of these last three bits. The BUF20800 will not acknowledge this byte; the communication protocol prohibits acknowledgement of the Hs master code. On receiving a master code, the BUF20800 will switch on its Hs mode filters, and communicate at up to 3.4MHz. Additional high-speed transfers may be initiated without resending the Hs mode byte by generating a repeat START without a STOP. The BUF20800 will switch out of Hs mode with the next STOP condition.

GENERAL CALL RESET AND POWER-UP

The BUF20800 responds to a General Call Reset, which is an address byte of 00h (0000 0000) followed by a data byte of 06h (0000 0110). The BUF20800 acknowledges both bytes. Upon receiving a General Call Reset, the BUF20800 performs a full internal reset, as though it had been powered off and then on. It always acknowledges the General Call address byte of 00h (0000 0000), but does not acknowledge any General Call data bytes other than 06h (0000 0110).

The BUF20800 automatically performs a reset upon power up. As part of the reset, all outputs are set to $(V_{REFH} - V_{REFL})/2$. Other reset values are available as a custom modification—contact your TI representative for details.

The BUF20800 resets all outputs to $(V_{REFH} - V_{REFL})/2$ after sending the device address, if a valid DAC address is sent with bits D7 to D5 set to ‘100’. If these bits are set to ‘010’, only the DAC being addressed in this most significant byte (MSB) and the following least significant byte (LSB) will be reset.

OUTPUT VOLTAGE

Buffer output values are determined by the reference voltages (V_{REFH} and V_{REFL}) and the decimal value of the binary input code used to program that buffer. The value is calculated using Equation 1:

$$V_{OUT} = \left[\frac{V_{REFH} - V_{REFL}}{1024} \times \text{Decimal Value of Code}\right] + V_{REFL} \quad (1)$$

The valid voltage ranges for the reference voltages are:

$$4V \le V_{REFH} \le V_S - 0.2V \text{ and } 0.2V \le V_{REFL} \le V_S - 4V \quad (2)$$

The BUF20800 outputs are capable of a full-scale voltage output change in typically 5µs—no intermediate steps are required.

OUTPUT LATCH

Updating the DAC register is not the same as updating the DAC output voltage, because the BUF20800 features a double-buffered register structure. There are three methods for latching transferred data from the storage registers into the DACs to update the DAC output voltages.

Method 1 requires externally setting the latch pin (LD) LOW, LD = LOW, which will update each DAC output voltage whenever its corresponding register is updated.

Method 2 externally sets LD = HIGH to allow all DAC output voltages to retain their values during data transfer and until LD = LOW, which will then simultaneously update the output voltages of all DACs to the new register values. Use this method to transfer a future data set in advance to prepare for a very fast output voltage update.

Method 3 uses software control. LD is maintained HIGH, and all DACs are updated when the master writes a 1 in bit 15 of any DAC register. The update will occur after receiving the 16-bit data for the currently-written register.

The General Call Reset and the power-up reset will update the DAC regardless of the state of the latch pin.

READ/WRITE OPERATIONS

The BUF20800 is able to read from a single DAC, or multiple DACs, or write to the register of a single DAC, or multiple DACs in a single communication transaction. DAC addresses begin with 0000 0000, which corresponds to DAC_1, through 0001 0011, which corresponds to V_{COM} OUT2.

Write commands are performed by setting the read/write bit LOW. Setting the read/write bit HIGH will perform a read transaction.

Writing:

To write to a single DAC register:

1. Send a START condition on the bus.
2. Send the device address and read/write bit = LOW. The BUF20800 will acknowledge this byte.
3. Send a DAC address byte. Bits D7−D5 must be set to 0. Bits D4−D0 are the DAC address. Only DAC addresses 00000 to 10011 are valid and will be acknowledged. Table 3 shows the DAC addresses.
4. Send two bytes of data for the specified DAC register. Begin by sending the most significant byte first (bits D15−D8, of which only bits D9 and D8 are used, and bits D15−D14 must not be 01), followed by the least significant byte (bits D7−D0). The register is updated after receiving the second byte.
5. Send a STOP condition on the bus.

Table 3. DAC Addresses

DAC	ADDRESS
DAC_1	0000 0000
DAC_2	0000 0001
DAC_3	0000 0010
DAC_4	0000 0011
DAC_5	0000 0100
DAC_6	0000 0101
DAC_7	0000 0110
DAC_8	0000 0111
DAC_9	0000 1000
DAC_10	0000 1001
DAC_11	0000 1010
DAC_12	0000 1011
DAC_13	0000 1100
DAC_14	0000 1101
DAC_15	0000 1110
DAC_16	0000 1111
DAC_17	0001 0000
DAC_18	0001 0001
$V_{COM\ OUT1}$	0001 0010
$V_{COM\ OUT2}$	0001 0011

The BUF20800 will acknowledge each data byte. If the master terminates communication early by sending a STOP or START condition on the bus, the specified register will not be updated. Updating the DAC register is not the same as updating the DAC output voltage. See the *Output Latch* section.

The process of updating multiple DAC registers begins the same as when updating a single register. However, instead of sending a STOP condition after writing the addressed register, the master continues to send data for the next register. The BUF20800 automatically and sequentially steps through subsequent registers as additional data is sent. The process continues until all desired registers have been updated or a STOP condition is sent.

To write to multiple DAC registers:

1. Send a START condition on the bus.
2. Send the device address and read/write bit = LOW. The BUF20800 will acknowledge this byte.
3. Send either the DAC_1 address byte to start at the first DAC, or send the address byte for whichever DAC will be the first in the sequence of DACs to be updated. The BUF20800 will begin with this DAC and step through subsequent DACs in sequential order.
4. Send the bytes of data; begin by sending the most significant byte (bits D15−D8, of which only bits D9 and D8 have meaning), followed by the least significant byte (bits D7−D0). The first two bytes are for the DAC addressed in step 3 above. Its register is automatically updated after receiving the second byte. The next two bytes are for the following DAC. That DAC register is updated after receiving the fourth byte. This process continues until the registers of all following DACs have been updated.
5. Send a STOP condition on the bus.

The BUF20800 will acknowledge each byte. To terminate communication, send a STOP or START condition on the bus. Only DAC registers that have received both bytes of data will be updated.

Reading:

Reading a DAC register will return the data stored in the DAC. This data can differ from the data stored in the DAC register. See the *Output Latch* section.

To read the DAC value:

1. Send a START condition on the bus.
2. Send the device address and read/write bit = LOW. The BUF20800 will acknowledge this byte.
3. Send the DAC address byte. Bits D7−D5 must be set to 0; Bits D4−D0 are the DAC address. Only DAC addresses 00000 to 10011 are valid and will be acknowledged.
4. Send a START or STOP/START condition on the bus.
5. Send correct device address and read/write bit = HIGH. The BUF20800 will acknowledge this byte.
6. Receive two bytes of data. They are for the specified DAC. The first received byte is the most significant byte (bits D15−D8; only bits D9 and D8 have meaning); the next byte is the least significant byte (bits D7−D0).
7. Acknowledge after receiving the first byte.
8. Do not acknowledge the second byte to end the read transaction.

Communication may be terminated by sending a premature STOP or START condition on the bus, or by not sending the acknowledge.

To Read Multiple DACs:

1. Send a START condition on the bus.
2. Send the device address and read/write bit = LOW. The BUF20800 will acknowledge this byte.
3. Send either the DAC_1 address byte to start at the first DAC, or send the address byte for whichever DAC will be the first in the sequence of DACs to be read. The BUF20800 will begin with this DAC and step through subsequent DACs in sequential order.
4. Send a START or STOP/START condition on the bus.
5. Send correct device address and read/write bit = HIGH. The BUF20800 will acknowledge this byte.
6. Receive two bytes of data. They are for the specified DAC. The first received byte is the most significant byte (bits D15−D8, only bits D9 and D8 have meaning); the next byte is the least significant byte (bits D7−D0).
7. Acknowledge after receiving each byte of data except for the last byte. The acknowledge bit of the last byte should be HIGH to end the read operation.
8. When all desired DACs have been read, send a STOP or repeated START condition on the bus.

Communication may be terminated by sending a premature STOP or START condition on the bus, or by not sending the acknowledge.

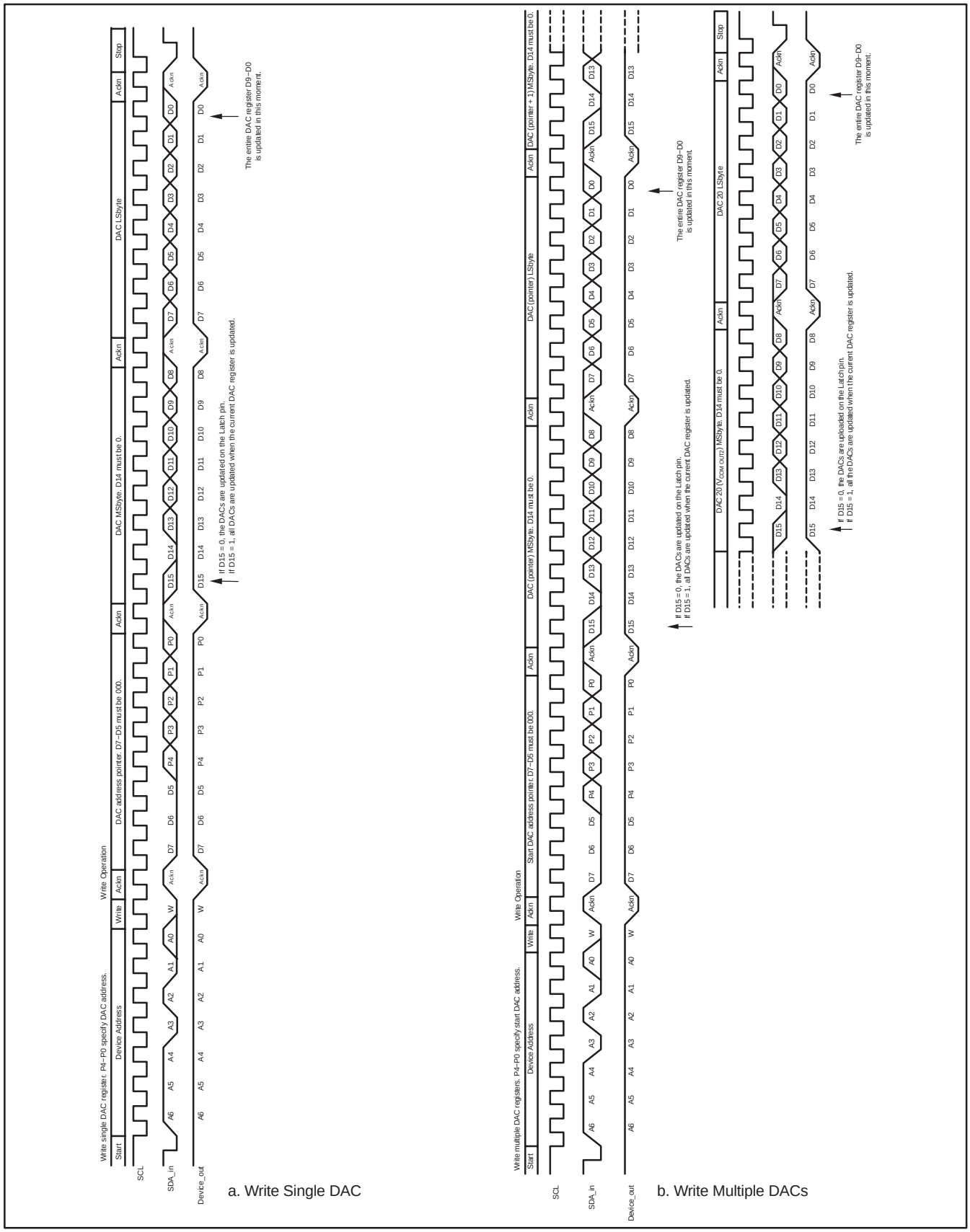

Figure 9. Timing Diagram for Write DAC Register

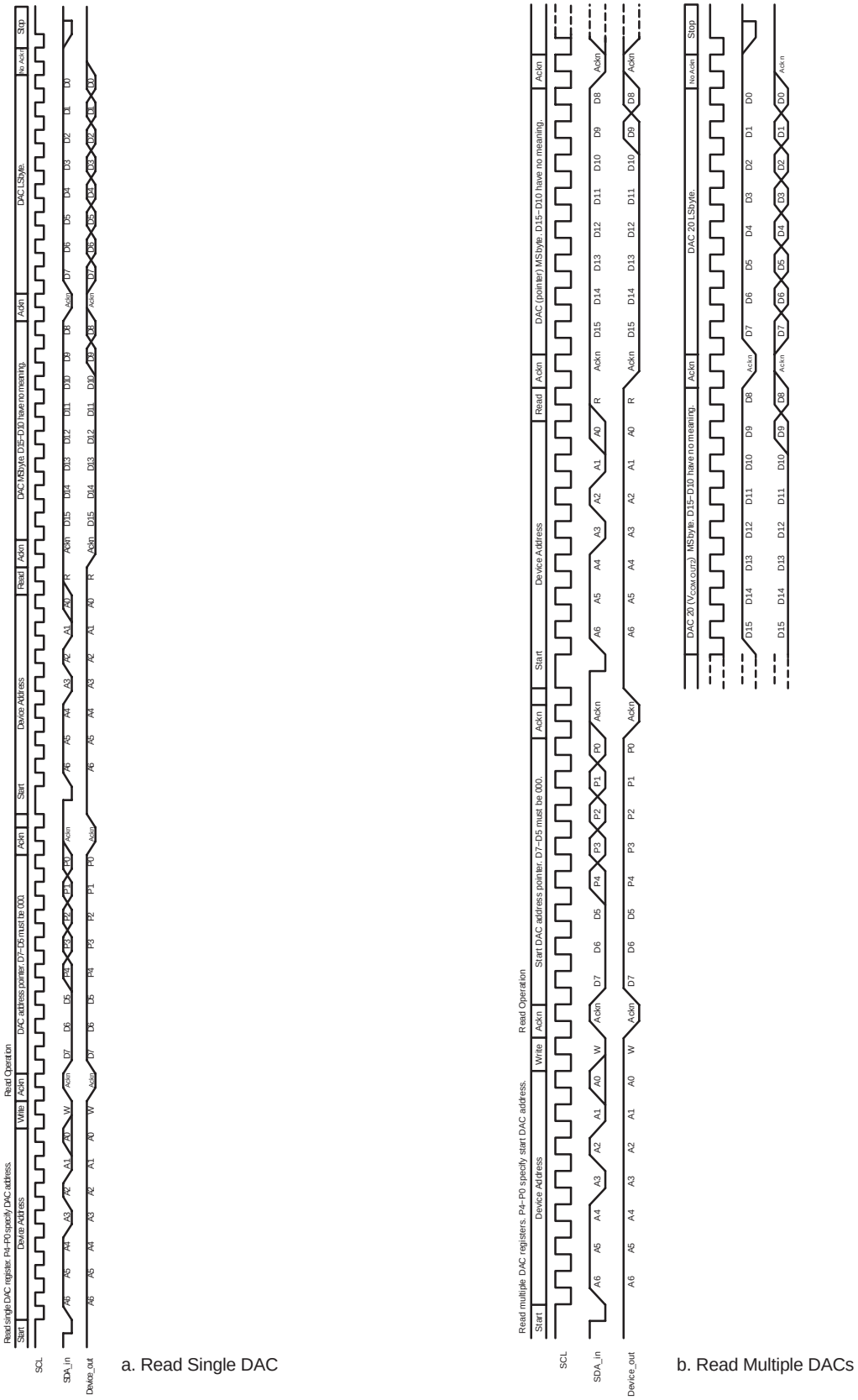

Figure 10. Timing Diagram for Read DAC Register

REPLACEMENT OF TRADITIONAL GAMMA BUFFER

Traditional gamma buffers rely on a resistor string (often using expensive 0.1% resistors) to set the gamma voltages. During development, the optimization of these gamma voltages can be time-consuming. Programming these gamma voltages with the BUF20800 can significantly reduce the time required for gamma voltage optimization. The final gamma values can be written into an external EEPROM to replace a traditional gamma buffer solution. During power-up of the LCD panel, the timing controller reads the EEPROM and loads the values into the BUF20800 to generate the desired gamma voltages. Figure 11a shows the traditional resistor string; Figure 11b shows the more efficient alternative method using the BUF20800.

BUF20800 uses the most advanced high-voltage CMOS process available today, which allows it to be competitive with traditional gamma buffers.

This technique offers significant advantages:

- It shortens development time significantly.
- It allows demonstration of various gamma curves to LCD monitor makers by simply uploading a different set of gamma values.
- It allows simple adjustment of gamma curves during production to accommodate changes in the panel manufacturing process or end-customer requirements.
- It decreases cost and space.

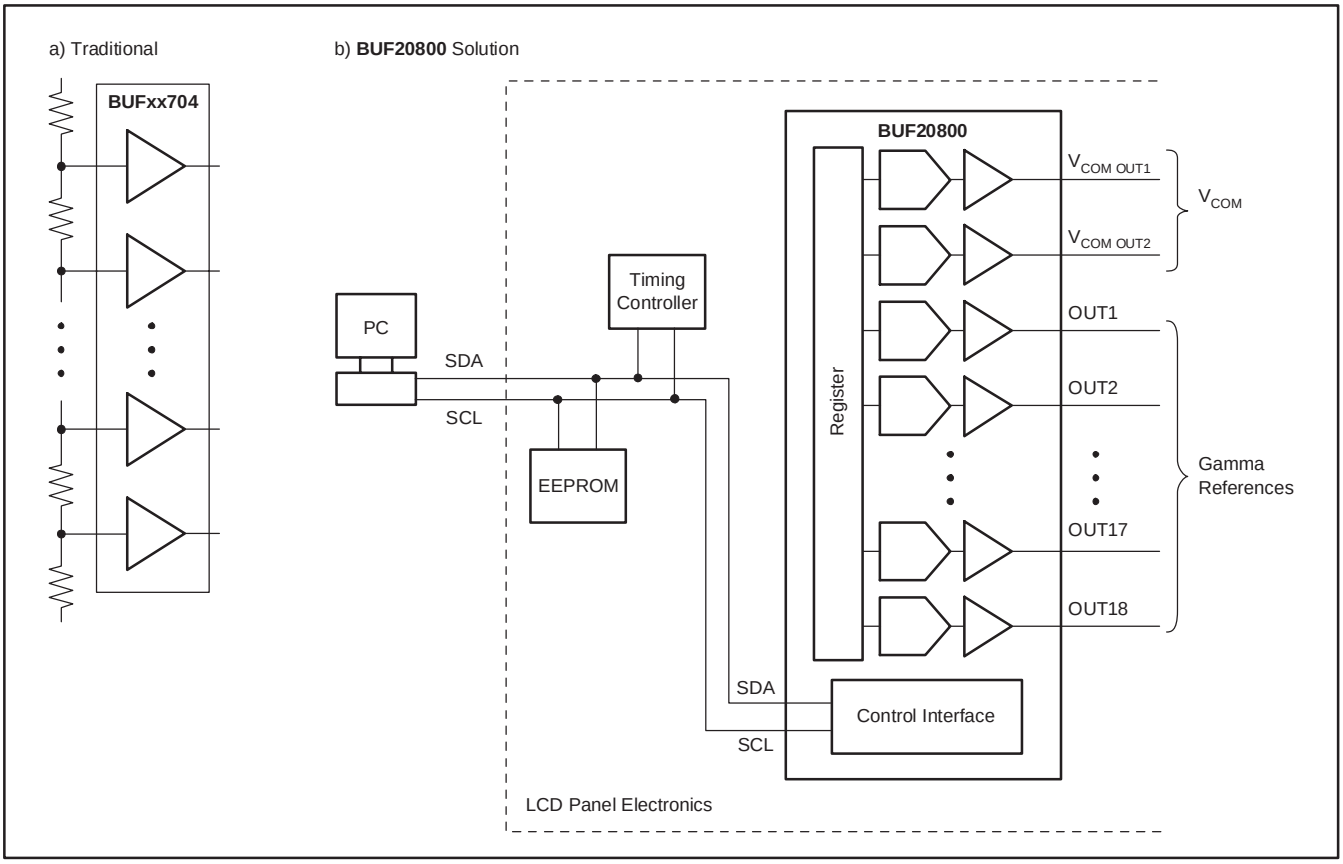

Figure 11. Replacement of the Traditional Gamma Buffer

PROGRAMMABLE V_{COM}

The V_{COM} channels of the BUF20800 can swing to 2V from the positive supply rail while sourcing 100mA and to 1V above the negative rail while sinking 100mA (see Figure 4, typical characteristic *Output Voltage vs Output Current*). To store the gamma and the V_{COM} values, an external EEPROM is required. During power-up of the LCD panel, the timing controller can then read the EEPROM and load the values into the BUF20800 to generate the desired V_{COM} voltages, as illustrated in Figure 11 and Figure 12. The V_{COM} channels can be programmed independently from the gamma channels.

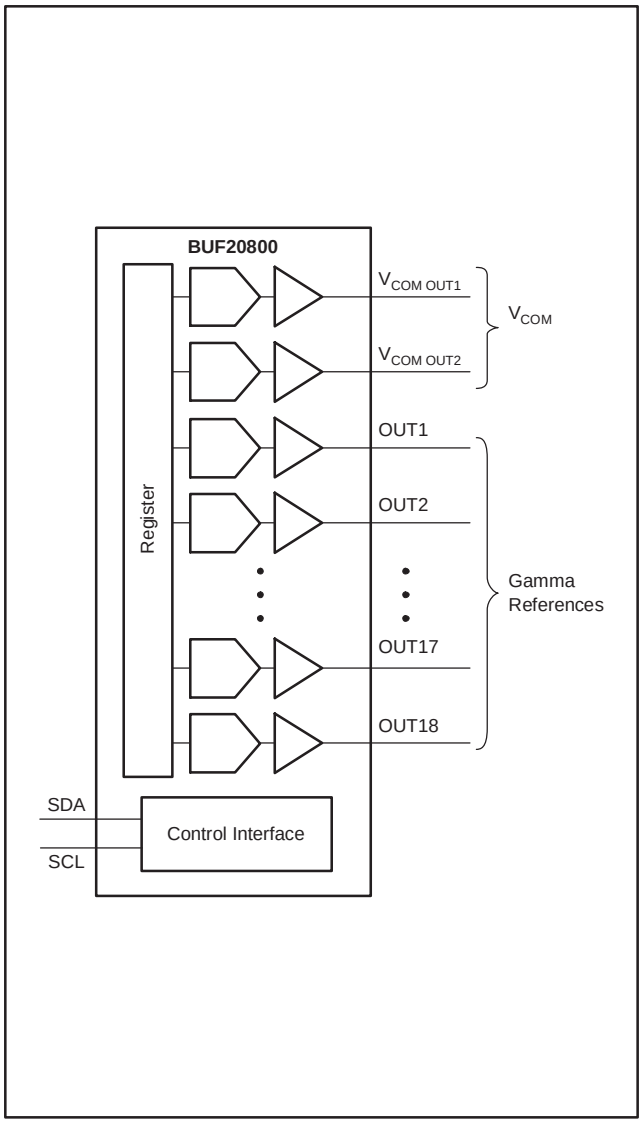

Figure 12. BUF20800 Used for Programmable V_{COM}

REFH AND REFL INPUT RANGE

Best performance and output swing range of the BUF20800 are achieved by applying REFH and REFL voltages that are slightly below the power-supply voltages. Most specifications have been tested at REFH = V_S − 200mV and REFL = GND + 200mV. The REFH internal buffer is designed to swing very closely to V_S and the REFL internal buffer to GND. However, there is a finite limit on how close they can swing before saturating. To avoid saturation of the internal REFH and REFL buffers, the REFH voltage should not be greater than V_S −100mV and REFL voltage should not be lower than GND + 100mV. Figure 13 shows the swing capability of the REFH and REFL buffers.

The other consideration when trying to maximize the output swing capability of the gamma buffers is the limitation in the swing range of output buffers (OUT1−18, V_{COM}1, and V_{COM}2), which depends on the load current. A typical load in the LCD application is 5−10mA. For example, if OUT1 is sourcing 10mA, the swing is typically limited to about V_S − 200mV. The same applies to OUT18, which typically limits at GND + 200mV when sinking 10mA. An increase in output swing can only be achieved for much lighter loads. For example, a 3mA load typically allows the swing to be increased to approximately V_S − 100mV and GND + 100mV.

Connecting REFH directly to V_S and REFL directly to GND does not damage the BUF20800. As discussed above however, the output stages of the REFH and REFL buffers will saturate. This condition is not desirable and can result in a small error in the measured output voltages of OUT1−18, V_{COM}1, and V_{COM}2. As described above, this method of connecting REFH and REL does not help to maximize the output swing capability.

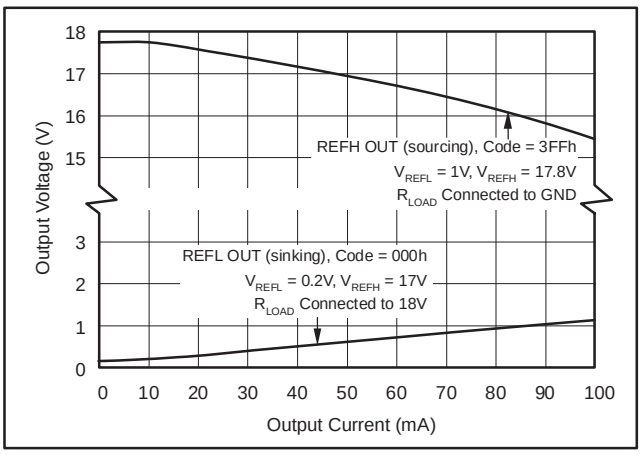

Figure 13. Reference Buffer Output Voltage vs Output Current

CONFIGURATION FOR 20 GAMMA CHANNELS

The V_{COM} outputs can be used as additional gamma references in order to achieve two additional gamma channels (20 total). The V_{COM} outputs will behave the same as the OUT1−9 outputs when sourcing or sinking smaller currents (see the Typical Characteristics, Figure 4). The V_{COM} outputs are better able to swing to the positive rail than to the negative rail. Therefore, it is better to use the V_{COM} outputs for higher reference voltages, as shown in Figure 14.

CONFIGURATION FOR 22 GAMMA CHANNELS

In addition to the V_{COM} outputs, the REFH and REFL OUT outputs can also be used as fixed gamma references. The output voltage will be set by the REFH and REFL input voltages, respectively. Therefore, REFH OUT should be used for the highest voltage gamma reference, and REFL OUT for the lowest voltage gamma reference. A 22-channel solution can be created by using all 18 outputs, the two V_{COM} outputs, and both REFH/L OUT outputs for gamma references—see Figure 15. However, the REFH and REFL OUT buffers were designed to only drive light loads on the order of 5−10mA. Driving capacitive loads is not recommended with these buffers. In addition, the REFH and REFL buffers must not be allowed to saturate from sourcing/sinking too much current from REFH OUT or REFL OUT. Saturation of the REFH and REFL buffers results in errors in the voltages of OUT1−18 and V_{COM} OUT1−2. The BUF01900 can be used to provide a programmable V_{COM} output.

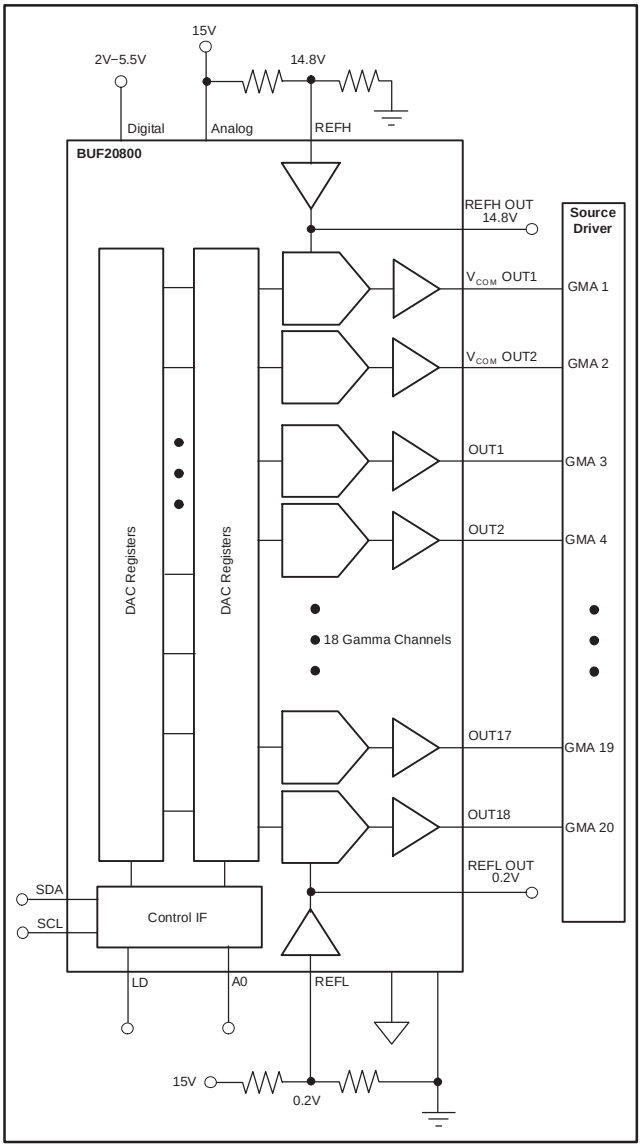

Figure 14. 20 Gamma Channel Solution − Two V_{COM} Channels Used as Additional Gamma Channels

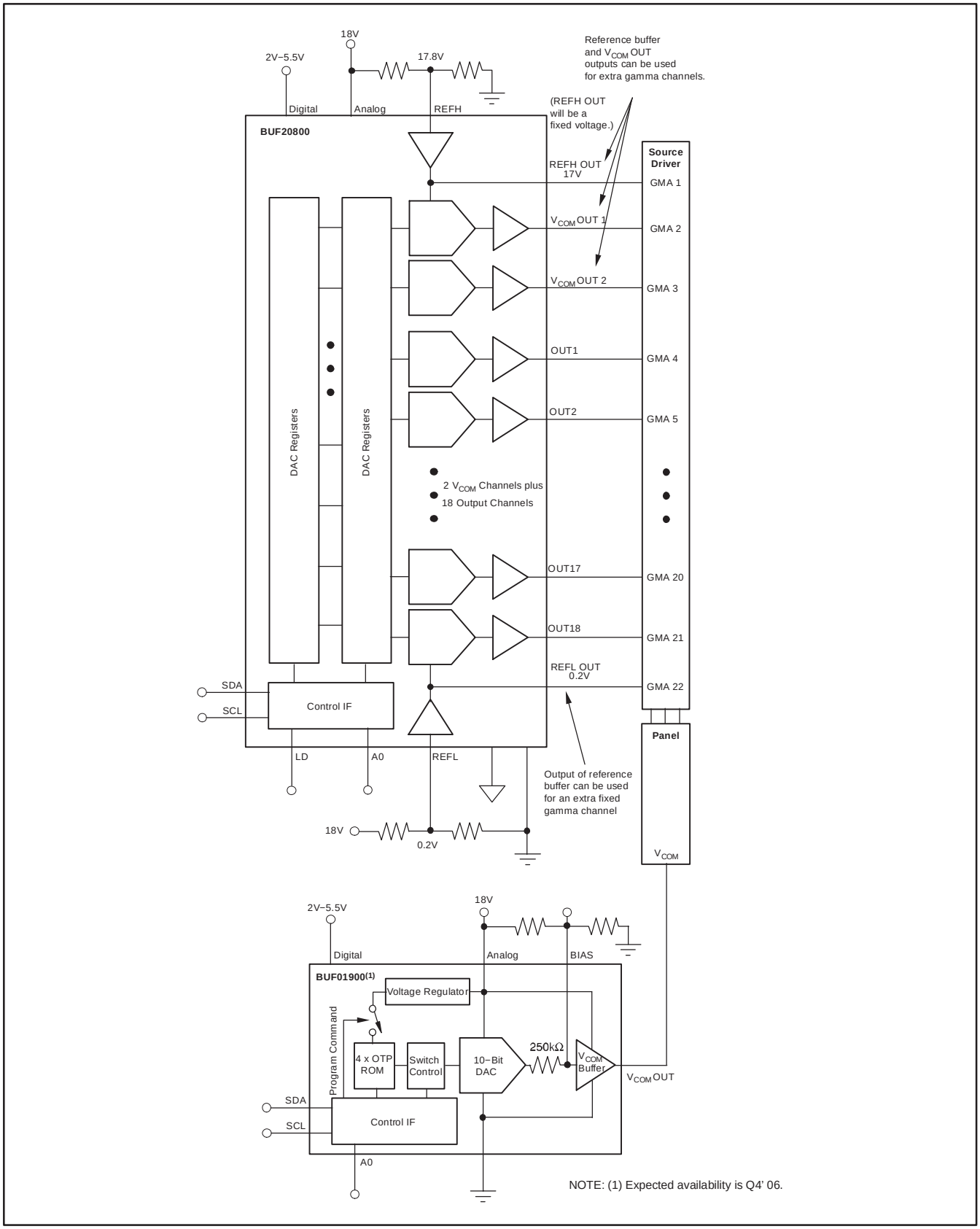

Figure 15. 22-Channel Gamma Solution

DYNAMIC GAMMA CONTROL

Dynamic gamma control is a technique used to improve the picture quality in LCD TV applications. The brightness in each picture frame is analyzed and the gamma curves are adjusted on a frame-by-frame basis. The gamma curves are typically updated during the short vertical blanking period in the video signal. Figure 16 shows a block diagram using the BUF20800 for dynamic gamma control and V_{COM} output.

The BUF20800 is ideally suited for rapidly changing the gamma curves because of its unique topology:

- double register input structure to the DAC;
- fast serial interface;
- simultaneous updating of all DACs by software. See the *Read/Write Operations* to write to all registers and the *Output Latch* sections.

The double register input structure saves programming time by allowing updated DAC values to be pre-loaded into the first register bank. Storage of this data can occur while a picture is still being displayed. Because the data are only stored into the first register bank, the DAC output values remain unchanged—the display is unaffected. During the vertical sync period, the DAC outputs (and therefore, the gamma voltages) can be quickly updated either by using an additional control line connected to the LD pin, or through software—writing a ‘1’ in bit 15 of any DAC register. For the details on the operation of the double register input structure, see the *Output Latch* section.

Example: Update all 18 gamma registers simultaneously via software.

Step 1: Check if LD pin is placed in HIGH state.

Step 2: Write DAC Registers 1−18 with bit 15 always ‘0’.

Step 3: Write any DAC register a second time with identical data. Make sure that bit 15 is ‘1’. All DAC channels will be updated simultaneously after receiving the last bit of data. (Note: this step may be eliminated by setting bit 15 of DAC 18 to ‘1’ in the previous step.)

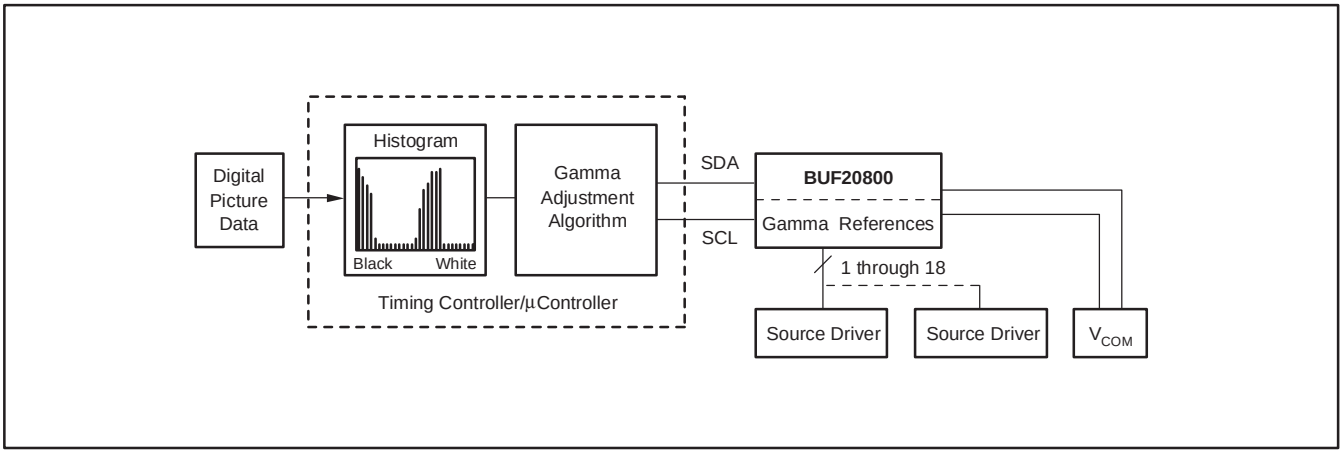

Figure 16. Dynamic Gamma Control

TOTAL TI PANEL SOLUTION

In addition to the BUF20800 programmable voltage reference, TI offers a complete set of ICs for the LCD panel market, including gamma correction buffers, various power-supply solutions, and audio power solutions. See Figure 17 for the total IC solution from TI.

THE BUF20800 IN INDUSTRIAL APPLICATIONS

The wide supply range, high output current, and very low cost make the BUF20800 attractive for a range of medium accuracy industrial applications such as programmable power supplies, multi-channel data-acquisition systems, data loggers, sensor excitation and linearization, power-supply generation, and other uses. Each DAC channel features 1LSB DNL and INL.

Many systems require different levels of biasing and power supply for various components as well as sensor excitation, control-loop set-points, voltage outputs, current outputs, and other functions. The BUF20800, with its 20 total programmable DAC channels, provides great flexibility to the entire system by allowing the designer to change all these parameters via software.

Figure 18 provides various ideas on how the BUF20800 can be used in applications. A micro-controller with two-wire serial interface controls the various DACs of the BUF20800. The BUF20800 can be used for:

- sensor excitation
- programmable bias/reference voltages
- variable power-supplies
- high-current voltage output
- 4-20mA output
- set-point generators for control loops.

NOTE: The output voltages of the BUF20800 DACs will be set to $(V_{REFH} - V_{REFL})/2$ at power-up or reset.

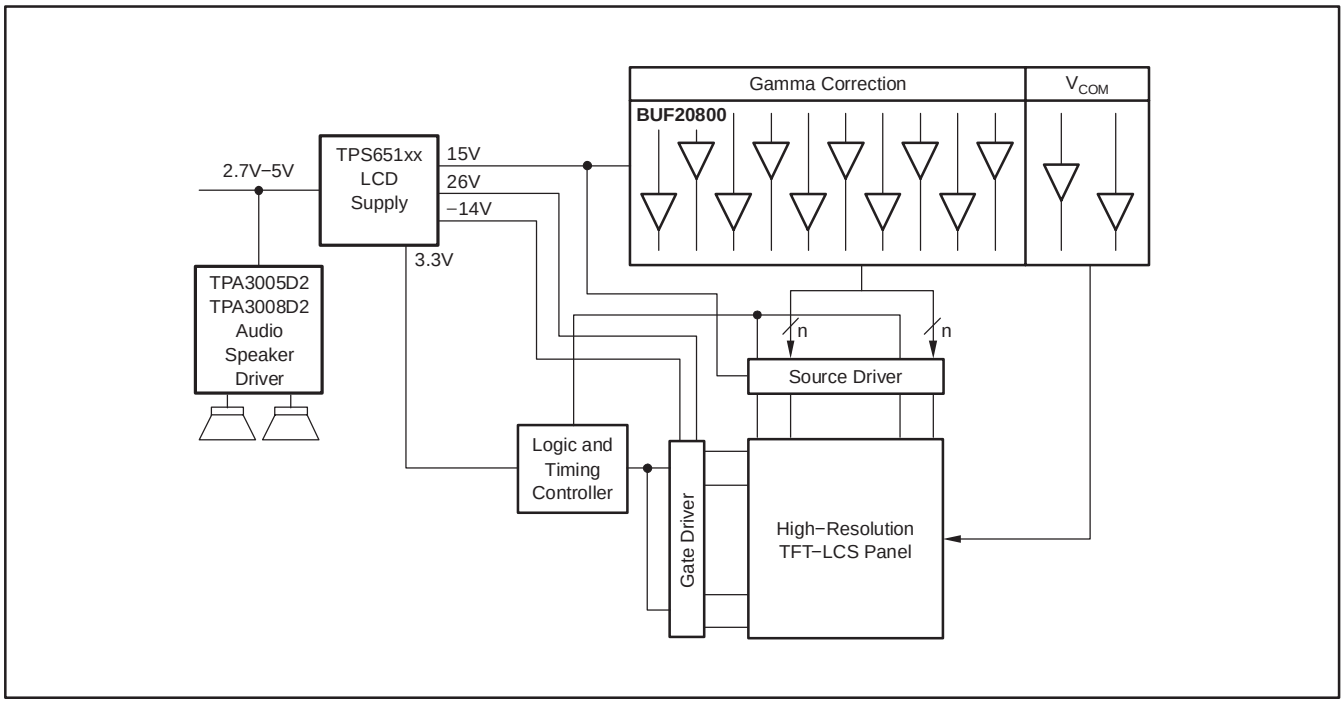

Figure 17. TI LCD Solution

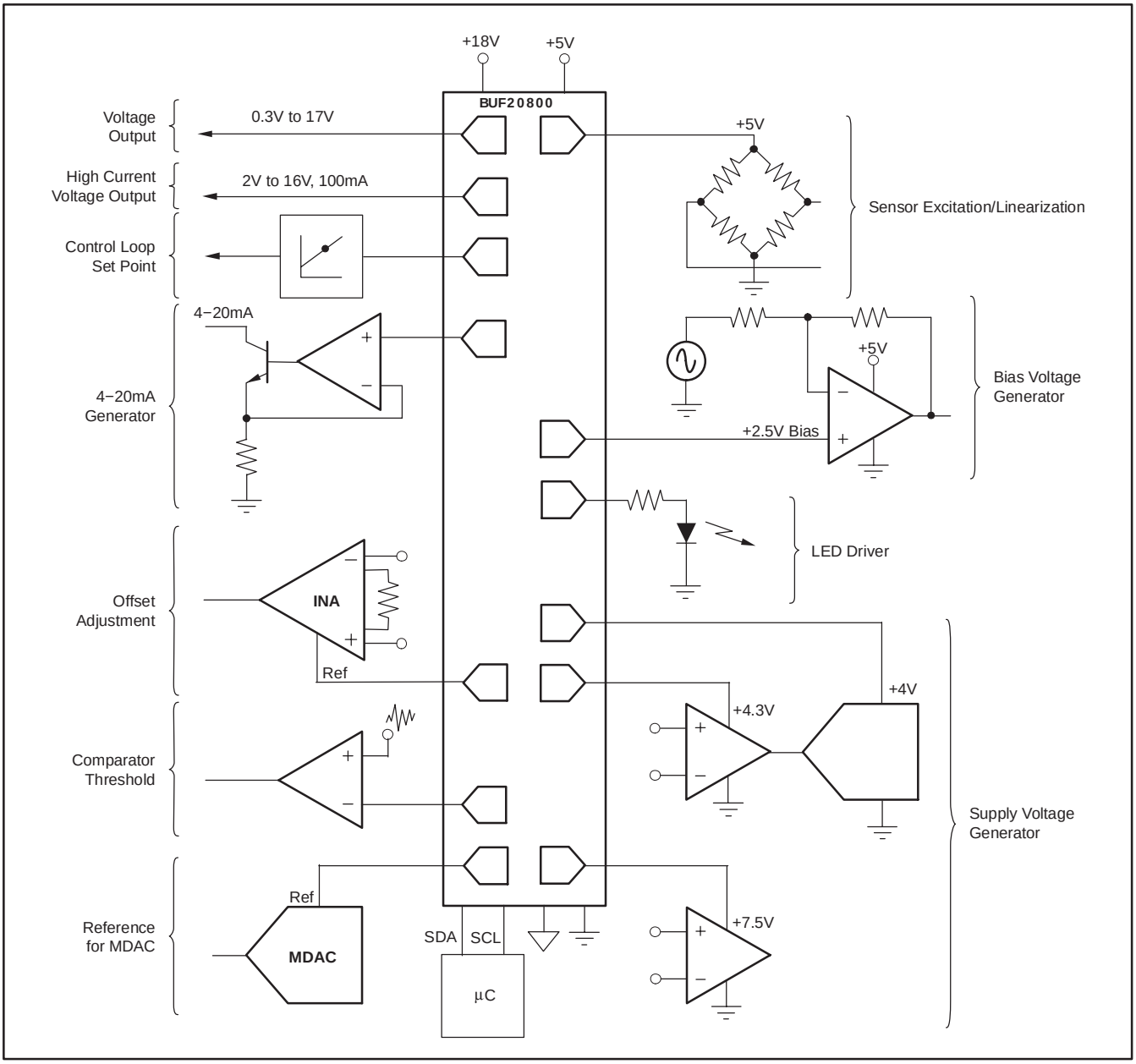

Figure 18. Industrial Applications for the BUF20800

EVALUATION BOARD AND SOFTWARE

An evaluation board is available for the BUF20800. The evaluation board features easy-to-use software that allows individual channel voltages to be set (see Figure 19). Configurations can be quickly evaluated to determine optimal codes for a given application. Contact your local TI representative for more information regarding the evaluation board.

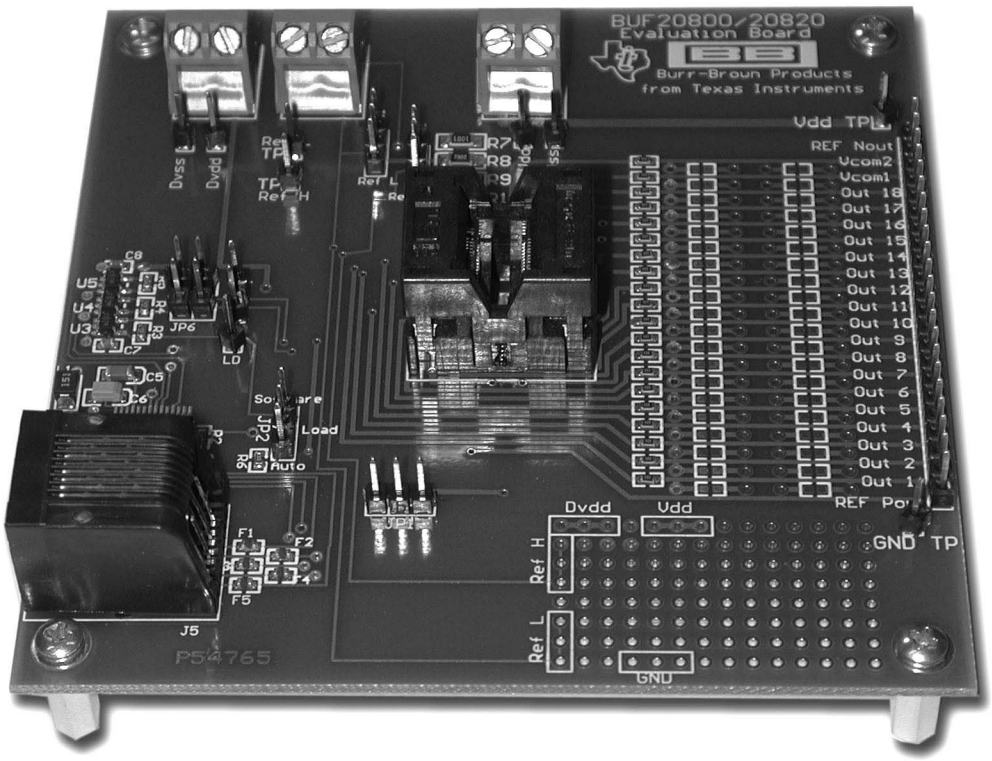

Figure 19. Evaluation Board

GENERAL POWERPAD DESIGN CONSIDERATIONS

The BUF20800 is available in a thermally-enhanced PowerPAD package. This package is constructed using a downset leadframe upon which the die is mounted, as shown in Figure 20(a) and Figure 20(b). This arrangement results in the lead frame being exposed as a thermal pad on the underside of the package; see Figure 20(c). This thermal pad has direct thermal contact with the die; thus, excellent thermal performance is achieved by providing a good thermal path away from the thermal pad.

The PowerPAD package allows for both assembly and thermal management in one manufacturing operation. During the surface-mount solder operation (when the leads are being soldered), the thermal pad must be soldered to a copper area underneath the package. Through the use of thermal paths within this copper area, heat can be conducted away from the package into either a ground plane or other heat-dissipating device. **Soldering the PowerPAD to the printed circuit board (PCB) is always required, even with applications that have low power dissipation.** This provides the necessary thermal and mechanical connection between the lead frame die pad and the PCB.

The PowerPAD must be connected to the most negative supply voltage on the device, GND_A and GND_D.

1. Prepare the PCB with a top-side etch pattern. There should be etching for the leads as well as etch for the thermal pad.
2. Place recommended holes in the area of the thermal pad. Ideal thermal land size and thermal via patterns (2x5) can be seen in the technical brief, *PowerPAD Thermally-Enhanced Package* (SLMA002), available for download at www.ti.com. These holes should be 13 mils (0.330mm) in diameter. Keep them small, so that solder wicking through the holes is not a problem during reflow.
3. Additional vias may be placed anywhere along the thermal plane outside of the thermal pad area. This helps dissipate the heat generated by the BUF20800 IC. These additional vias may be larger than the 13-mil diameter vias directly under the thermal pad. They can be larger because they are not in the thermal pad area to be soldered; thus, wicking is not a problem.
4. Connect all holes to the internal plane that is at the same voltage potential as the GND pins.
5. When connecting these holes to the internal plane, do not use the typical web or spoke via connection methodology. Web connections have a high thermal resistance connection that is useful for slowing the heat transfer during soldering operations. This makes the soldering of vias that have plane connections easier. In this application, however, low thermal resistance is desired for the most efficient heat transfer. Therefore, the holes under the BUF20800 PowerPAD package should make their connection to the internal plane with a complete connection around the entire circumference of the plated-through hole.
6. The top-side solder mask should leave the terminals of the package and the thermal pad area with its ten holes exposed. The bottom-side solder mask should cover the holes of the thermal pad area. This masking prevents solder from being pulled away from the thermal pad area during the reflow process.
7. Apply solder paste to the exposed thermal pad area and all of the IC terminals.
8. With these preparatory steps in place, the BUF20800 IC is simply placed in position and run through the solder reflow operation as any standard surface-mount component. This preparation results in a properly installed part.

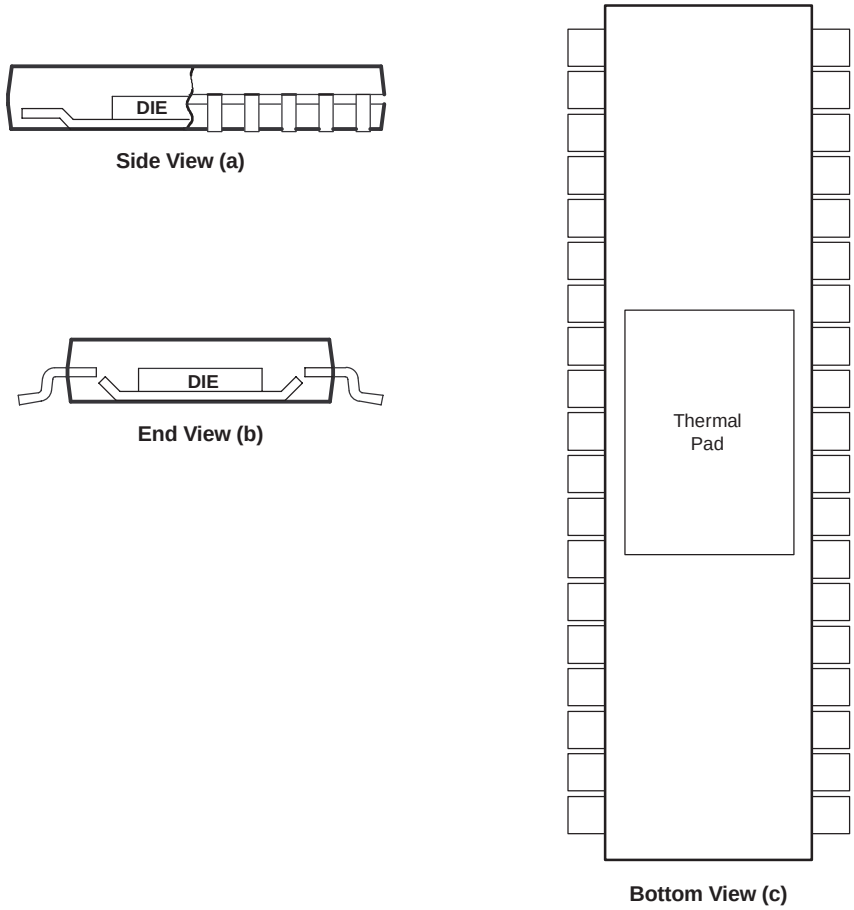

The thermal pad is electrically isolated from all terminals in the package.

Figure 20. Views of Thermally-Enhanced DCP Package

For a given θ_{JA}, the maximum power dissipation is shown in Figure 21, and is calculated by Equation 3:

$$P_D = \left(\frac{T_{MAX} - T_A}{\theta_{JA}}\right) \quad (3)$$

Where:

P_D = maximum power dissipation (W)

T_{MAX} = absolute maximum junction temperature (125°C)

T_A = free-ambient air temperature (°C)

$\theta_{JA} = \theta_{JC} + \theta_{CA}$

θ_{JC} = thermal coefficient from junction-to-case (°C/W)

θ_{CA} = thermal coefficient from case-to-ambient air (°C/W)

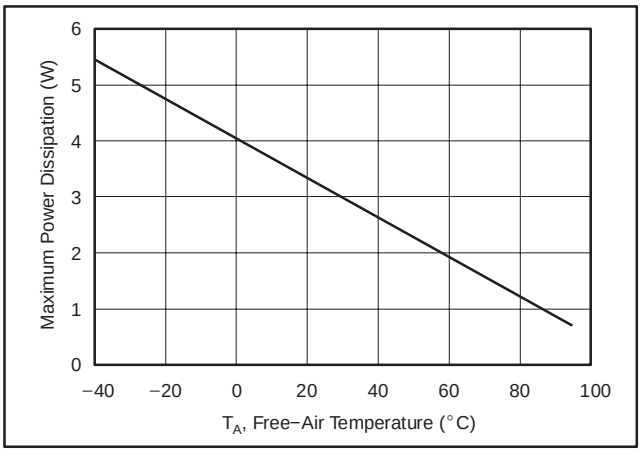

Figure 21. Maximum Power Dissipation vs Free-Air Temperature (with PowerPAD soldered down)

PACKAGING INFORMATION

Orderable Device	Status (1)	Package Type	Package Drawing	Pins	Package Qty	Eco Plan (2)	Lead/Ball Finish (6)	MSL Peak Temp (3)	Op Temp (°C)	Device Marking (4/5)	Samples
BUF20800AIDCPR	ACTIVE	HTSSOP	DCP	38	2000	Green (RoHS & no Sb/Br)	CU NIPDAU	Level-2-260C-1 YEAR	-40 to 95	BUF20800	Samples

(1) The marketing status values are defined as follows:
ACTIVE: Product device recommended for new designs.
LIFEBUY: TI has announced that the device will be discontinued, and a lifetime-buy period is in effect.
NRND: Not recommended for new designs. Device is in production to support existing customers, but TI does not recommend using this part in a new design.
PREVIEW: Device has been announced but is not in production. Samples may or may not be available.
OBSOLETE: TI has discontinued the production of the device.

(2) Eco Plan - The planned eco-friendly classification: Pb-Free (RoHS), Pb-Free (RoHS Exempt), or Green (RoHS & no Sb/Br) - please check http://www.ti.com/productcontent for the latest availability information and additional product content details.
TBD: The Pb-Free/Green conversion plan has not been defined.
Pb-Free (RoHS): TI's terms "Lead-Free" or "Pb-Free" mean semiconductor products that are compatible with the current RoHS requirements for all 6 substances, including the requirement that lead not exceed 0.1% by weight in homogeneous materials. Where designed to be soldered at high temperatures, TI Pb-Free products are suitable for use in specified lead-free processes.
Pb-Free (RoHS Exempt): This component has a RoHS exemption for either 1) lead-based flip-chip solder bumps used between the die and package, or 2) lead-based die adhesive used between the die and leadframe. The component is otherwise considered Pb-Free (RoHS compatible) as defined above.
Green (RoHS & no Sb/Br): TI defines "Green" to mean Pb-Free (RoHS compatible), and free of Bromine (Br) and Antimony (Sb) based flame retardants (Br or Sb do not exceed 0.1% by weight in homogeneous material)

(3) MSL, Peak Temp. - The Moisture Sensitivity Level rating according to the JEDEC industry standard classifications, and peak solder temperature.

(4) There may be additional marking, which relates to the logo, the lot trace code information, or the environmental category on the device.

(5) Multiple Device Markings will be inside parentheses. Only one Device Marking contained in parentheses and separated by a "~" will appear on a device. If a line is indented then it is a continuation of the previous line and the two combined represent the entire Device Marking for that device.

(6) Lead/Ball Finish - Orderable Devices may have multiple material finish options. Finish options are separated by a vertical ruled line. Lead/Ball Finish values may wrap to two lines if the finish value exceeds the maximum column width.

Important Information and Disclaimer: The information provided on this page represents TI's knowledge and belief as of the date that it is provided. TI bases its knowledge and belief on information provided by third parties, and makes no representation or warranty as to the accuracy of such information. Efforts are underway to better integrate information from third parties. TI has taken and continues to take reasonable steps to provide representative and accurate information but may not have conducted destructive testing or chemical analysis on incoming materials and chemicals. TI and TI suppliers consider certain information to be proprietary, and thus CAS numbers and other limited information may not be available for release.

In no event shall TI's liability arising out of such information exceed the total purchase price of the TI part(s) at issue in this document sold by TI to Customer on an annual basis.

OTHER QUALIFIED VERSIONS OF BUF20800 :

- Automotive: BUF20800-Q1

NOTE: Qualified Version Definitions:

- Automotive - Q100 devices qualified for high-reliability automotive applications targeting zero defects

TAPE AND REEL INFORMATION

REEL DIMENSIONS

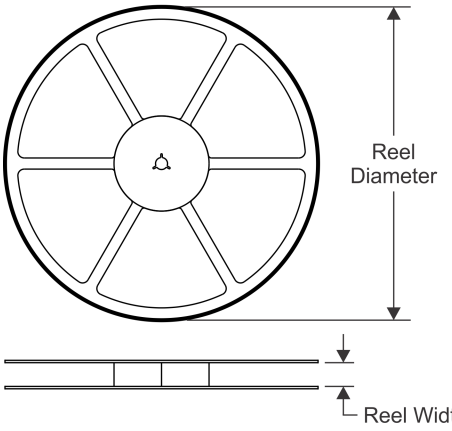

TAPE DIMENSIONS

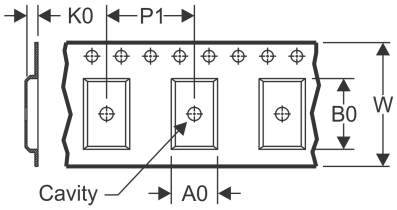

A0	Dimension designed to accommodate the component width
B0	Dimension designed to accommodate the component length
K0	Dimension designed to accommodate the component thickness
W	Overall width of the carrier tape
P1	Pitch between successive cavity centers

QUADRANT ASSIGNMENTS FOR PIN 1 ORIENTATION IN TAPE

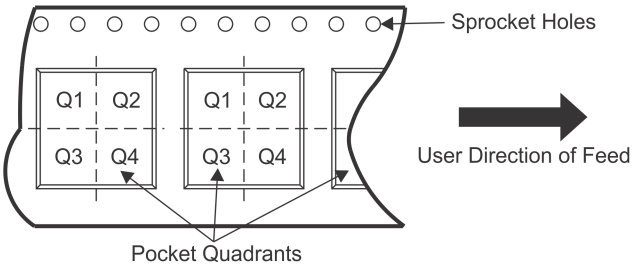

*All dimensions are nominal

Device	Package Type	Package Drawing	Pins	SPQ	Reel Diameter (mm)	Reel Width W1 (mm)	A0 (mm)	B0 (mm)	K0 (mm)	P1 (mm)	W (mm)	Pin1 Quadrant
BUF20800AIDCPR	HTSSOP	DCP	38	2000	330.0	16.4	6.9	10.2	1.8	12.0	16.0	Q1

TAPE AND REEL BOX DIMENSIONS

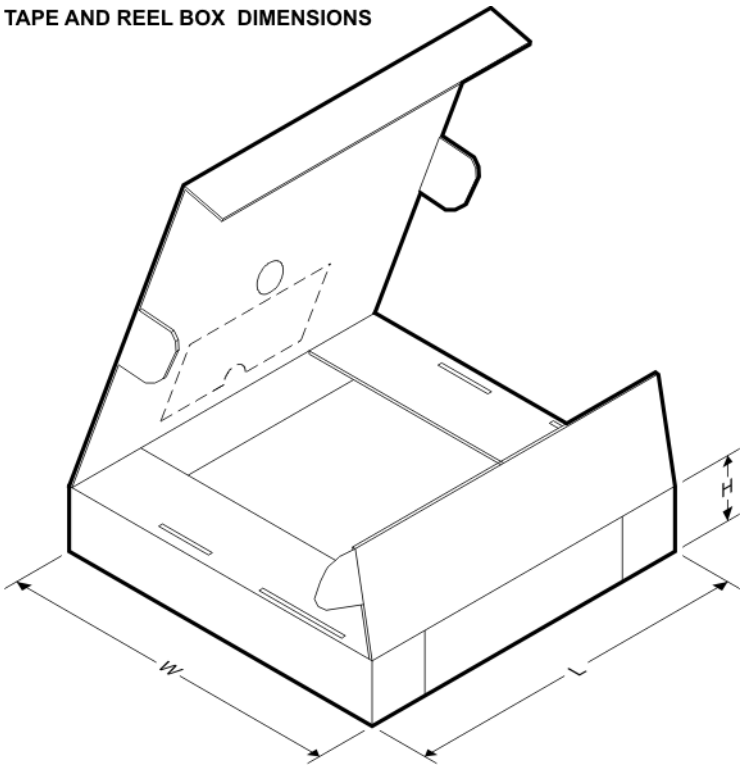

*All dimensions are nominal

Device	Package Type	Package Drawing	Pins	SPQ	Length (mm)	Width (mm)	Height (mm)
BUF20800AIDCPR	HTSSOP	DCP	38	2000	350.0	350.0	43.0

GENERIC PACKAGE VIEW

DCP 38

PowerPAD TSSOP - 1.2 mm max height

4.4 x 9.7, 0.22 mm pitch

SMALL OUTLINE PACKAGE

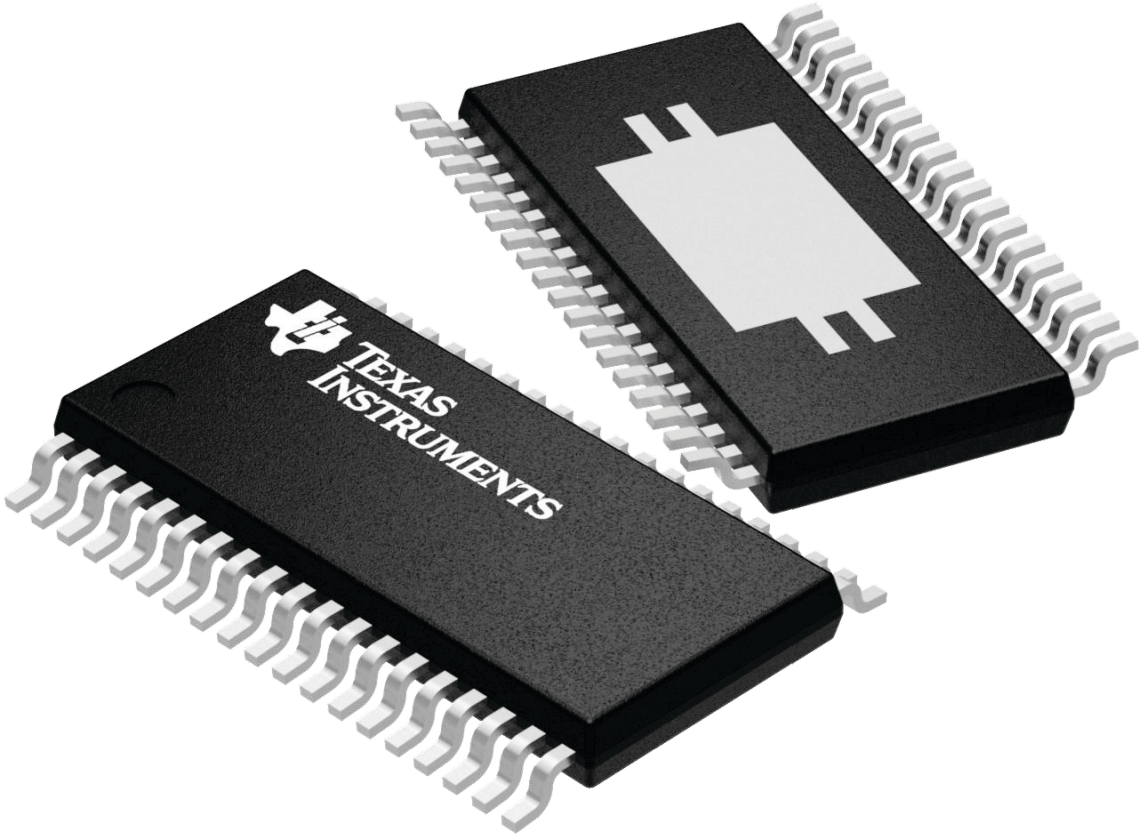

Images above are just a representation of the package family, actual package may vary.
Refer to the product data sheet for package details.

4224560/A

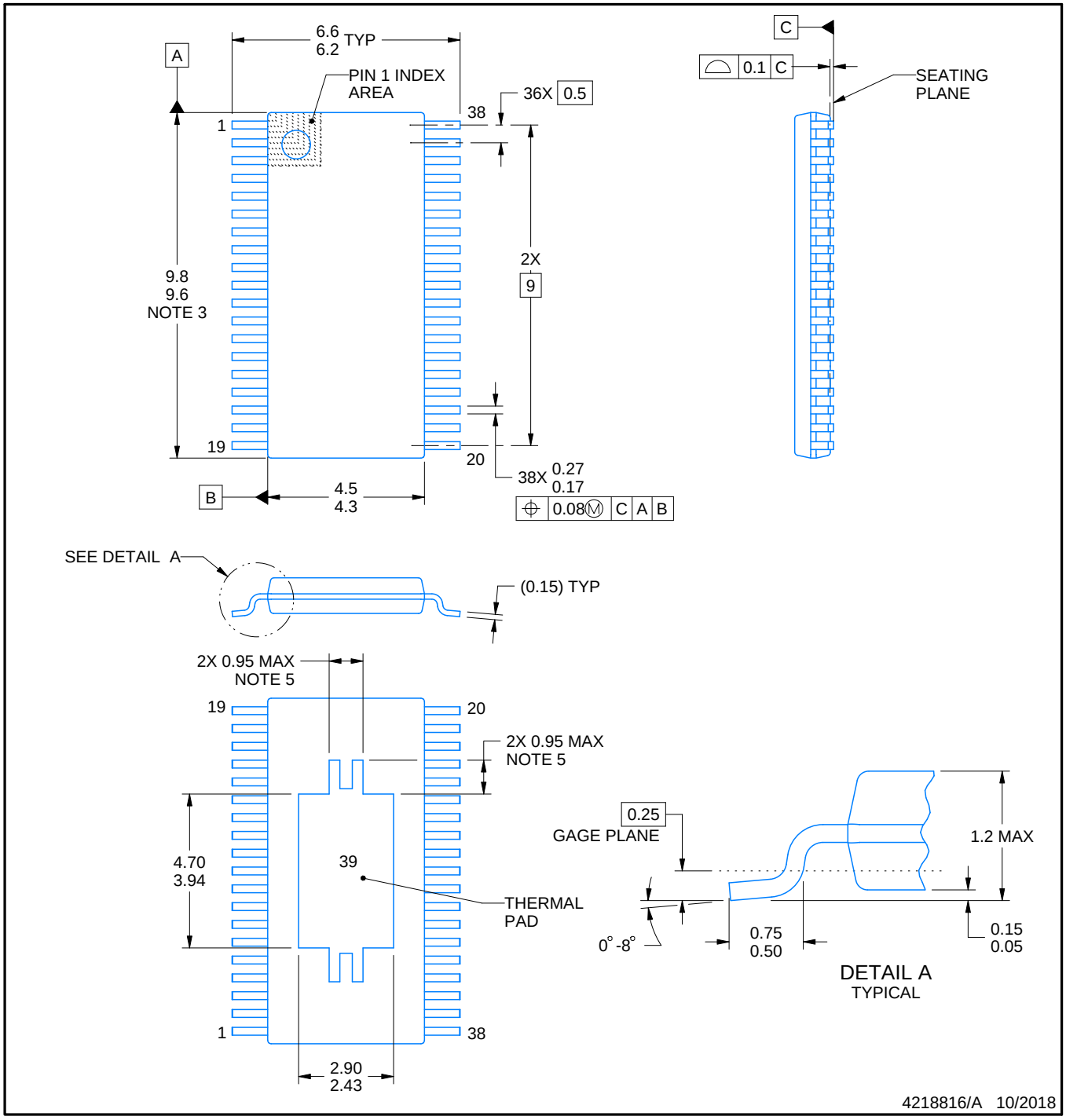

PowerPAD is a trademark of Texas Instruments.

NOTES:

1. All linear dimensions are in millimeters. Any dimensions in parenthesis are for reference only. Dimensioning and tolerancing per ASME Y14.5M.
2. This drawing is subject to change without notice.
3. This dimension does not include mold flash, protrusions, or gate burrs. Mold flash, protrusions, or gate burrs shall not exceed 0.15 mm per side.
4. Reference JEDEC registration MO-153.
5. Features may differ or may not be present.

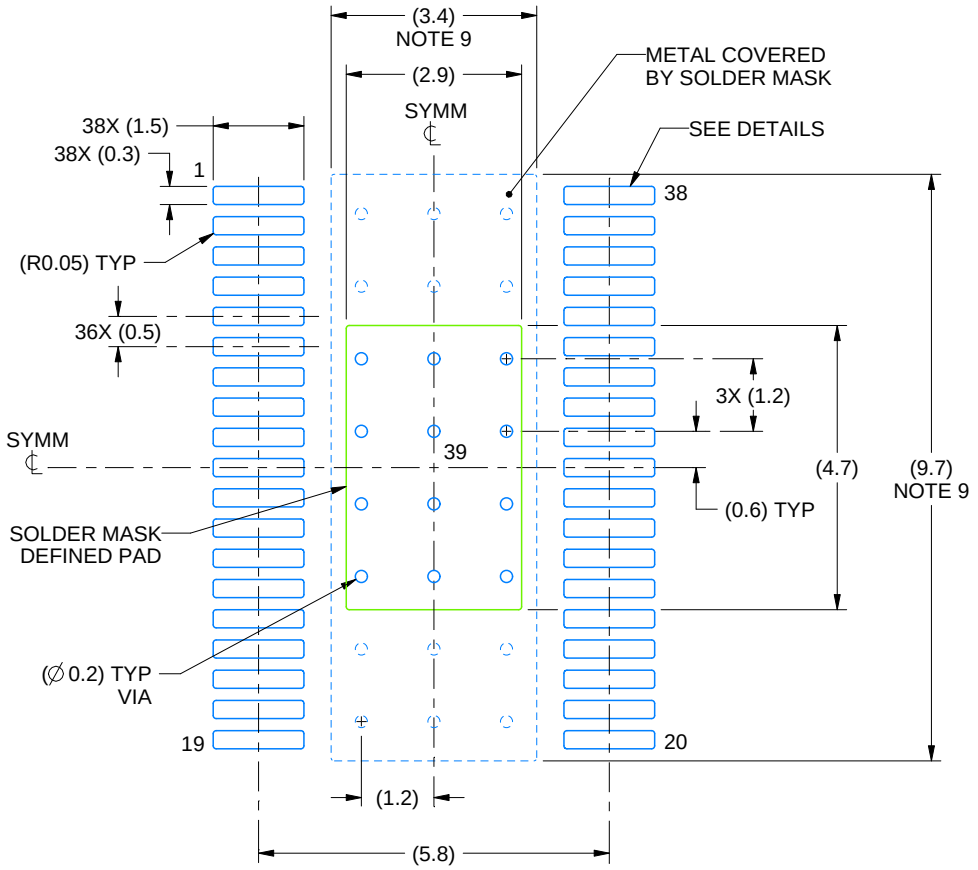

LAND PATTERN EXAMPLE
EXPOSED METAL SHOWN
SCALE: 8X

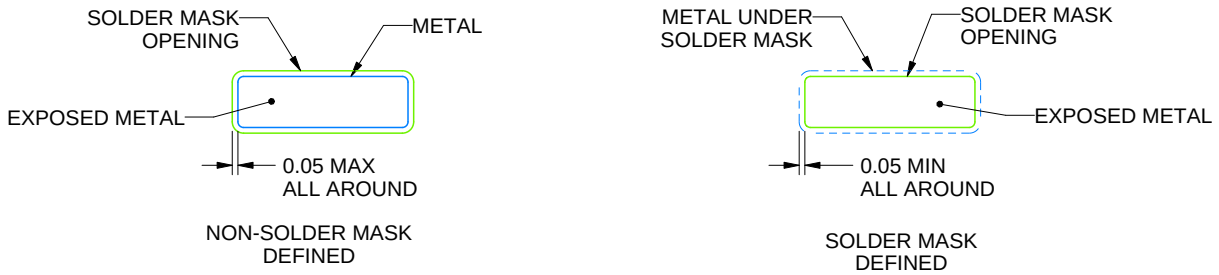

SOLDER MASK DETAILS

4218816/A 10/2018

NOTES: (continued)

6. Publication IPC-7351 may have alternate designs.
7. Solder mask tolerances between and around signal pads can vary based on board fabrication site.
8. This package is designed to be soldered to a thermal pad on the board. For more information, see Texas Instruments literature numbers SLMA002 (www.ti.com/lit/slma002) and SLMA004 (www.ti.com/lit/slma004).
9. Size of metal pad may vary due to creepage requirement.
10. Vias are optional depending on application, refer to device data sheet. It is recommended that vias under paste be filled, plugged or tented.

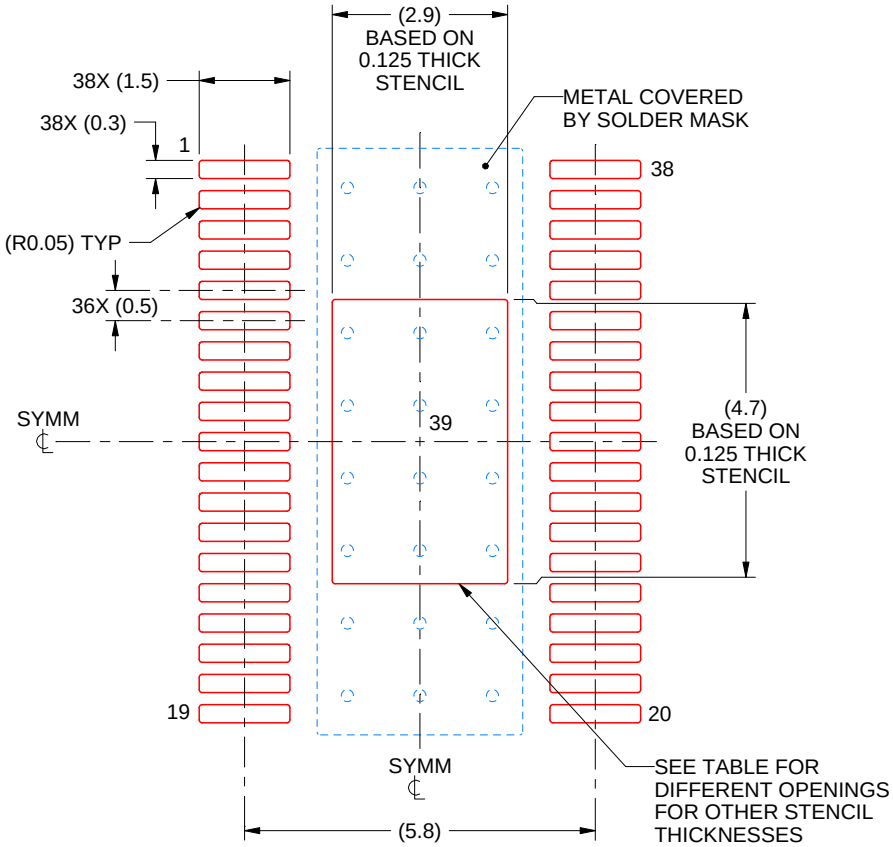

SOLDER PASTE EXAMPLE
BASED ON 0.125 mm THICK STENCIL
SCALE: 8X

STENCIL THICKNESS	SOLDER STENCIL OPENING
0.1	3.24 X 5.25
0.125	2.90 X 4.70 (SHOWN)
0.15	2.65 X 4.29
0.175	2.45 X 3.97

4218816/A 10/2018

NOTES: (continued)

11. Laser cutting apertures with trapezoidal walls and rounded corners may offer better paste release. IPC-7525 may have alternate design recommendations.
12. Board assembly site may have different recommendations for stencil design.

IMPORTANT NOTICE AND DISCLAIMER

TI PROVIDES TECHNICAL AND RELIABILITY DATA (INCLUDING DATASHEETS), DESIGN RESOURCES (INCLUDING REFERENCE DESIGNS), APPLICATION OR OTHER DESIGN ADVICE, WEB TOOLS, SAFETY INFORMATION, AND OTHER RESOURCES “AS IS” AND WITH ALL FAULTS, AND DISCLAIMS ALL WARRANTIES, EXPRESS AND IMPLIED, INCLUDING WITHOUT LIMITATION ANY IMPLIED WARRANTIES OF MERCHANTABILITY, FITNESS FOR A PARTICULAR PURPOSE OR NON-INFRINGEMENT OF THIRD PARTY INTELLECTUAL PROPERTY RIGHTS.

These resources are intended for skilled developers designing with TI products. You are solely responsible for (1) selecting the appropriate TI products for your application, (2) designing, validating and testing your application, and (3) ensuring your application meets applicable standards, and any other safety, security, or other requirements. These resources are subject to change without notice. TI grants you permission to use these resources only for development of an application that uses the TI products described in the resource. Other reproduction and display of these resources is prohibited. No license is granted to any other TI intellectual property right or to any third party intellectual property right. TI disclaims responsibility for, and you will fully indemnify TI and its representatives against, any claims, damages, costs, losses, and liabilities arising out of your use of these resources.

TI’s products are provided subject to TI’s Terms of Sale (www.ti.com/legal/termsofsale.html) or other applicable terms available either on ti.com or provided in conjunction with such TI products. TI’s provision of these resources does not expand or otherwise alter TI’s applicable warranties or warranty disclaimers for TI products.

Mailing Address: Texas Instruments, Post Office Box 655303, Dallas, Texas 75265
Copyright © 2019, Texas Instruments Incorporated

Looking for pricing, stock, or lifecycle information?

Click below to explore more details on WIN SOURCE:

- View BUF20800AIDCPR on WIN SOURCE
- Texas Instruments Information

Optimize Your Supply Chain with WIN SOURCE Solutions

- Global Sourcing Solution
- Obsolete Management
- Cost Control Management
- Shortage Management
- Alternative Solution
- Excess Inventory Management