# THE DATASHEET OF

# KPTB14-12PS

www.win-source.net 0086-755-83957316

cannon

# KPT / KPSE / KPTC Connectors

## In Accordance with VG95328

ITT

# We Connect

## When it matters most

For more than a century, ITT Cannon has developed innovative interconnect solutions for the world's harshest environments. With facilities in the United States, Germany, Italy, Mexico, China, and Japan, each with its unique strengths, we offer our customers interconnect solutions that are truly Engineered for Life.

In addition to this truly global footprint, we offer highly specialized, segmented industry expertise. We have a proven track record as an industry leader in harsh-environment applications. This has equipped us with the knowledge needed to continue to produce the most resilient, reliable connectors for our customers' most challenging conditions.

## Interconnect solutions for the harshest environments.

cannon

### The ITT Cannon difference

- Global capabilities & local support
- Proven application expertise
- A century of interconnect leadership
- A committed innovator & business partner

### About ITT

ITT is a diversified leading manufacturer of highly engineered critical components and customized technology solutions for the energy, transportation and industrial markets. Building on its heritage of innovation, ITT partners with its customers to deliver enduring solutions to the key industries that underpin our modern way of life. Founded in 1920, ITT is headquartered in Stamford, Connecticut, with employees in more than 35 countries and sales in a total of approximately 125 countries. For more information, visit itt.com.

cannon

## Our connector portfolio remains the most extensive

in the industry, offering a reliable and cost effective range of interconnect solutions



ITT

# Introduction to KPSE/KPT/KPTC

ITT Cannon's KPSE / KPT and KPTC series of miniature positive bayonet locking connectors offer a range of high-density signal solutions. They are designed according to MIL-DTL-26482 series I or VG95328 – details below. Next to the original use in military vehicles these connector series have become a standard for industrial uses as eg. off-road vehicles, sensors, factory equipment and other heavy industry applications.

All three product lines have specific characteristics and provide a set of unique variants, however, all lines are fully intermateable with each other as well as any other connector series designed to MIL-DTL 26482 series I or VG95328 standards.

| Product Series | Origin | VG 95328 Approved | MIL-DTL 26482 Series I Approved |
|---|---|---|---|
| KPSE | German make/origin | Yes | No |
| KPSE | US make/origin | No | No |
| KPT | German make/origin | No | No |
| KPT | US make/origin | No | No |
| KPTC | German make/origin | No | No |

KPSE is the high-performance crimp contact solution featuring a clip-in retention system for fast and simple assembly. ITT Cannon is approved to offer this line with VG marking according to VG95328.

KPT is the first of two general duty series, and equipped with solder pot contacts and glued in contacts. This makes this product ideal for any prototype solution as well as for military vehicle applications based on the MIL-DTL-268482 series I standard.

KPTC is the second ITT Cannon general duty series with either crimp or solder pot contact versions. In comparison this series comes with a simpler design and avoids the high-performance clip-in solution of KPSE as well as the glued contact assembly of KPT which makes this line a good choice for many industrial applications.

Both KPTC as well as KPT add typical industrial back shells to their portfolio.

**Common features of KPSE / KPT / KPTC:**

- Intermateability with all product lines designed to MIL-DTL-26482 Series I
- Environmental sealing to IP67 and IP68
- ½ turn positive bayonet coupling for quick mating & unmating
- Shielded backshell accessories
- A range of RoHS compliant plating alternatives to Cadmium including VG approved Tin Zinc, Nickel, Zinc Nickel and Zinc Cobalt versions
- Customizing options

**This document solely applies to European manufactured KPT / KPSE / KPTC products.**

# Contact Principle

## CONTACT & SEALING PRINCIPLE

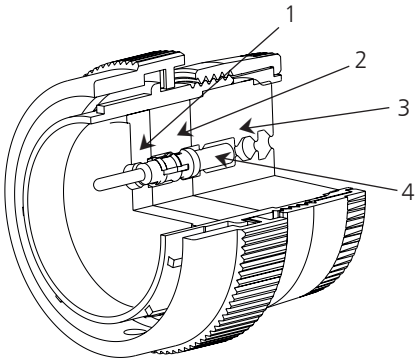


**KPSE** uses a three piece insulator stack up consisting of

1 - rubber insulator
2 - plastic wafer / retaining clips
3 - rubber grommet to seal individual wires
4 - two piece machined contact with retaining clip

Rubber insulator (1) and grommet (3) together with the front-sealing ring provide the sealing in mated condition as well as the sealing of individual wires protruding through the grommet.

Contact retention is provided using a two piece contact with retaining clip. The stiff plastic wafer or individual metal clips provide the specified contact retention. A good tactile response is given when contacts are pushed in the final assembly position.

Contacts are installed from the rear by hand or with an insertion tool to ease assembly. Contact removal is done with an extraction tool from the front.

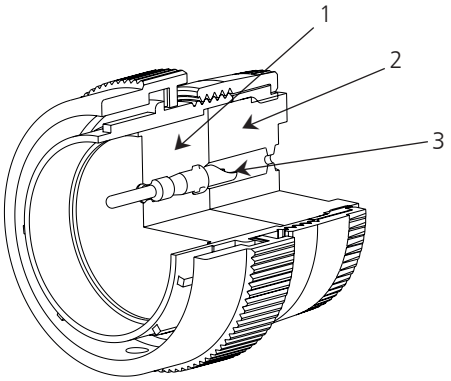


**KPT** uses a rubber insulator and sealing grommet

1 - rubber insulator
2 - rubber grommet to seal individual wires
3 - one piece machined contact
Rubber insulator (1) and grommet (2) together with the front sealing ring provide the sealing in mated condition as well as the sealing of individual wires protruding through the grommet.

Contact retention is provided by form fit of the machined contact in the rubber insulator. Additionally, glue is applied to secure contacts in the exact mounting position. KPT is equipped with solder pot contacts only and pre installed by the factory.

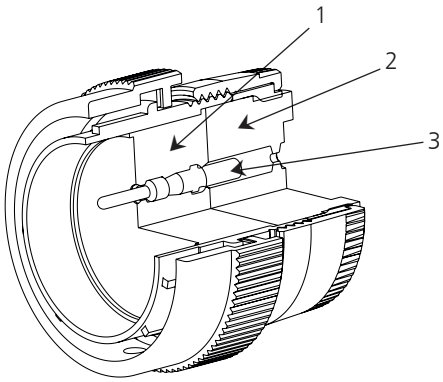


**KPTC** uses a rubber insulator and sealing grommet

1 - rubber insulator
2 - rubber grommet to seal individual wires
3 - one piece machined contact

Rubber insulator (1) and grommet (2) together with the front sealing ring provide the sealing in mated condition as well as the sealing of individual wires protruding through the grommet.

Contact retention is provided by form fit of the machined contact in the rubber insulator. Solder pot contacts are pre-installed by the factory, crimp contacts are delivered separately. Glue is not applied to KPTC connectors.

Contacts are installed from the rear with an insertion tool.
Contact removal is done with an extraction tool from the front.

Dimensions shown in mm | Specifications and dimensions subject to change
This document solely applies to European manufactured KPT / KPSE / KPTC products

# Table of contents

Contact and sealing principle ..... 5
How to use this catalogue ..... 7
Product overview ..... 8
Panel cutouts ..... 10
Ordering reference ..... 11
Contact arrangements ..... 14
Alternate insert positions ..... 17
Wall mounting receptacles ..... 18
Cable connecting plugs ..... 21
Box mounting receptacles ..... 24
Thru-bulkhead receptacles ..... 24
Straight plugs ..... 25
Jam nut receptacles ..... 29
Right angle plugs ..... 31
Receptacles with PCB solder pins ..... 33
**Accessories and tooling**
Protective caps ..... 34
Dummy receptacle ..... 36
Cross reference lists ..... 37
Tools and accessories ..... 38
Product safety information ..... 41

# How to use

This catalog is split in several sections that help you to

- get a general overview of all product lines (product overview)
- create a product part number step by step (ordering reference)
- get all required detail information (dimensions, product details)
- get all required support products (accessories, tooling)

The fastest way to find your product of choice is to follow these steps

1 **Select your product** using the "ordering reference" option

2 **Use the detail pages** to better understand the available options and choose the best solution for your needs

3 **Add accessories and tooling** as required on the related pages

4 **Use the contact information** on the back cover to contact us for further questions or to get advice on where you can purchase our products

Dimensions shown in mm | Specifications and dimensions subject to change
This document solely applies to European manufactured KPT / KPSE / KPTC products

# Product overview KPSE (VG95328), KPT, KPTC

## Electrical Data

### Contact rating at 60°C:

| Size | Rated current A | Test current A | Millivolt drop mV |
|---|---|---|---|
| 20 | 7,5 | 7,5 | Less than 50 |
| 16 | 13,0 | 13,0 | Less than 50 |

### Current rating vs. ambient temperature:

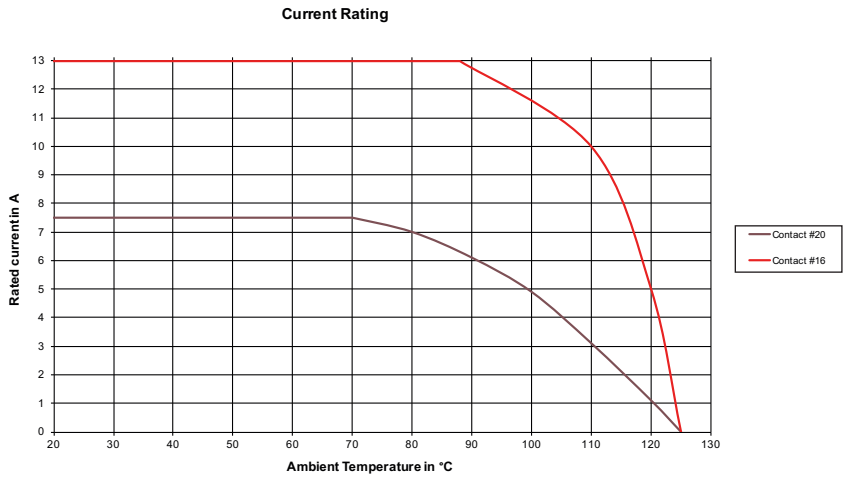


### Comment for contact rating and current rating:

Rated current values shown are the max. current flowing continuously (not intermittently) through one contact pair with the same cross section with regard to ambient temperature. If multiple contact pairs are loaded into a connector the current rating curve has to be reduced.

### Minimum air & creepage paths:

| | Contact to contact crimp | Contact to contact solder | Contact to shell |
|---|---|---|---|
| Service Class 1 | 1,9 mm | 0,75 mm | 1,0 mm |
| Service Class 2 | 2,8 mm | 1,53 mm | 2,8 mm |

### Insulation resistance: ~ 5000 MOhm

### Operating voltage:

| Service class | VG95328 | MIL-C-26482 |
|---|---|---|
| 1 | 140 VDC/100 VAC | 850 VDC/600 VAC |
| 2 | 165 VDC/115 VAC | 1400 VDC/1000 VAC |

**Comment:** When connectors in this catalog are used at voltages exceeding > 50VAC / 75VDC safety provisions as defined in the European low voltage directive 2014/35/EU have to be adhered to. For use in other regions see appropriate local regulations.

### Test voltage:

| Test voltage | Service class | Vrms | VDC |
|---|---|---|---|
| Service Class 1 | 1 | 1500 | 2100 |
| | 2 | 2300 | 3200 |
| 21336 M/70,000ft. | 1 | 375 | 535 |
| | 2 | 550 | 770 |

## Mechanical data

### Ambient temperature: -55°C … 125°C

### Environmental sealing:

| | |
|---|---|
| In mated condition for KPSE, KPT and KPTC product lines: | IP67 acc. ISO 20653 |
| VG95328 connectors: | IP68 (0,2bar / 48h) – see below |
| According to VG95319 Part 2, Test No. 5.9.2 \| For styles A to E and Z1, Z2 and Z3 and gaskets style A only, test pressure 0,2 bar overpressure, test duartion 48h, test temperature 25±3°C, connector shall be free of moisture | |

### Vibration test acc. VG95328:

Vibration stress 150 m/s$^2$, 10 Hz to 2000 Hz
and Random vibration stress, 5 Hz to 500 Hz acc. test 5.52 VG95328-1

### Mating cycles: 500

### Material:

| | |
|---|---|
| Shell | Aluminium alloy |
| Shell finishes | - Cadmium, VG approved - Tin Zinc, VG approved - ZnCobalt Black - Zinc Cobalt Green - Zinc Nickel Blue Generation, for non-shielded versions - Nickel |
| Insulator | Polychloroprene |
| Grommet and seals | |
| Contacts | Copper alloy, gold and silver plating |

### Product line design principles:

KPSE: Clip in crimp contact system, VG approved versions
KPT: Solder contacts, pre-installed and fixed with glue, VG approved versions
KPTC: Crimp contacts for tool insertion OR pre-installed solder contacts (not fixed with glue)

All further details, product line options etc. see following catalog pages

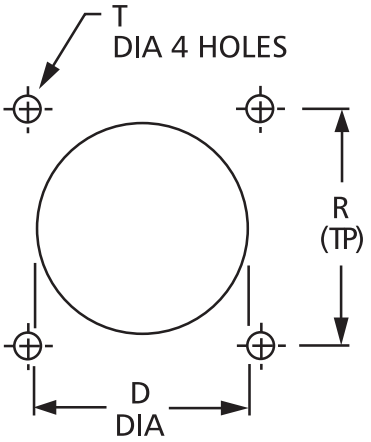


## BOX MOUNTING RECEPTACLE

| Shell size | For rear mounting | For front mounting | | |
|---|---|---|---|---|
| | Ø D +0,25/0 | Ø D +0,25/0 | R ±0,15 | Ø T +0,3 |
| **8** | 14,0 | 12,7 | 15,1 | 3,1 |
| **10** | 17,0 | 16,0 | 18,3 | 3,1 |
| **12** | 22,0 | 19,0 | 20,6 | 3,1 |
| **14** | 25,0 | 22,2 | 23,0 | 3,1 |
| **16** | 28,0 | 25,5 | 24,6 | 3,1 |
| **18** | 31,0 | 28,5 | 27,0 | 3,1 |
| **20** | 34,5 | 31,7 | 29,4 | 3,1 |
| **22** | 37,5 | 35,0 | 31,8 | 3,1 |
| **24** | 41,0 | 38,0 | 34,9 | 3,6 |

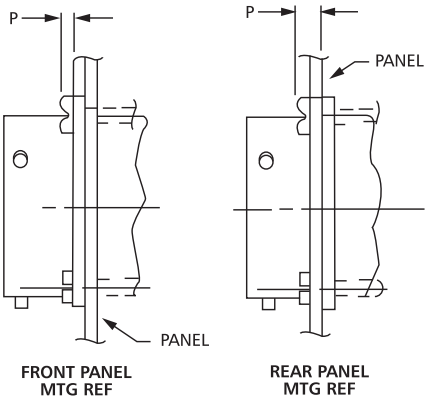


## PANEL THICKNESS

| Shell size | P – Panel thickness<br>Height of screw head included |
|---|---|
| **8** | 2,2 |
| **10** | 2,2 |
| **12** | 2,2 |
| **14** | 2,2 |
| **16** | 2,2 |
| **18** | 2,2 |
| **20** | 5,4 |
| **22** | 5,4 |
| **24** | 5,4 |

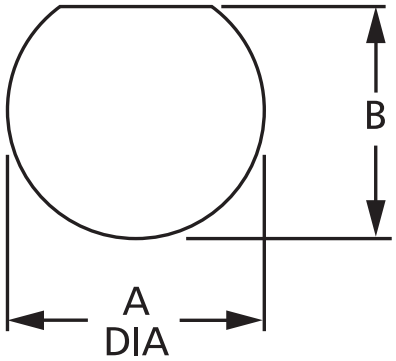


## JAM NUT RECEPTACLE

| Shell size | KPT/KPSE<br>Ø A +0,25/–0 | KPT/KPSE<br>B +0/–0,12 |
|---|---|---|
| **8** | 14,5 | 13,6 |
| **10** | 17,7 | 16,8 |
| **12** | 22,7 | 21,2 |
| **14** | 25,7 | 24,1 |
| **16** | 28,8 | 27,2 |
| **18** | 32,0 | 30,4 |
| **20** | 35,1 | 33,6 |
| **22** | 38,4 | 36,8 |
| **24** | 41,5 | 40,0 |

# How to order

## Cannon Order reference

## KPT / KPSE / KPTC

KP.. 02 E 22 – 36 P W *

| **Series** |
|---|
| KPSE – Cannon prefix crimp, contacts supplied |
| KPT – Cannon prefix solder, contacts installed |
| KPTC – Cannon prefix commercial version, contacts to be ordered separately.<br>See modification codes for contact options |

| **Shell type** (See note below) | |
|---|---|
| Cannon designation omit 0 in case of a mod code and KPTC | |
| 00 – wall mounting receptacle | see page 18-20 |
| 01 – cable connecting plug | see page 21-23 |
| 02 – box mounting receptacle (class E only). | see page 24 |
| 06 – straight plug | see page 25-28 |
| 07 – jam nut receptacle | see page 29-31 |
| 08 – 90° angle plug | see page 31 |
| KPTB - thru-bulkhead receptacle | see page 24 |

| **Class** |
|---|
| A – Endbell with thread, no grommet seal; for jam nut: without endbell |
| E – Pressure nut and grommet seal - for 90° versions: endbell with thread, and grommet seal<br>– with modification DN: Endbell for heat shrink boot and grommet seal<br>– with modifiction DT: Banding adapter for heat shrink boot and grommet seal, shielded<br>– with modification DZ: Endbell for heat shrink boot and grommet seal, shielded |
| F – Endbell with cable clamp and grommet seal |
| PG – endbell for PG glands |
| ME – endbell for metric glands |

| **Shell size** |
|---|
| 8 – 24 |

| **Contact arrangement** | see page 14-16 |
|---|---|

| **Contact type** |
|---|
| P – pin |
| S – socket |

| **Alternate insert position** | |
|---|---|
| W, X, Y and Z (omit for normal position) | see page 17 |

| **Modification** | see page 12 |
|---|---|

Note:
* If a modification is used the initial ‚0' in the shell style description is omitted e.g. KPT01E10-6P is changed to KPT1E10-6P-DN.
KPTC series does not use the initial ‚0' e.g. KPTC6E10-6P-C.

Dimensions shown in mm | Specifications and dimensions subject to change
This document solely applies to European manufactured KPT / KPSE / KPTC products

# Modification Codes

## KPT:

Multiple codes can be used in order of listing below:

| Contact | |
|---|---|
| PCB solder pin 0,76 x 7mm (style 02 and 07 only) | EX |
| PCB solder pin 0,6 x 7mm (style 02 and 07 only) | EW |

| Endbell | |
|---|---|
| heat shrink boot adapter, grommet seal | DN |
| Banding adapter for heat shrink boot and grommet seal, shielded | DT |
| shielded, heat shrink boot adapter, grommet seal | DZ |
| without endbell, grommet and ferrule | F42* |

| Endbell for PG cable gland, class PG only | |
|---|---|
| PG09 thread for connectors with shell size 10 | P9 |
| PG11 thread for connectors with shell size 12 | P11 |
| PG13,5 thread for connectors with shell size 14 | P13,5 |
| PG16 thread for connectors with shell size 16 | P16 |
| PG21 thread for connectors with shell size 18, 20, 22 | P21 |
| PG29 thread for connectors with shell size 24 | P29 |

| Endbell for Metric cable gland, class ME only | |
|---|---|
| M12 thread for connectors with shell size 10 | M12 |
| M16 thread for connectors with shell size 12 | M16 |
| M20 thread for connectors with shell size 16 | M20 |
| M25 thread for connectors with shell size 18, 20 | M25 |
| M32 thread for connectors with shell size 22, 24 | M32 |

| Plating (Cadmium with olive drab chromate plating is standard - without code; Alternative platings below) | |
|---|---|
| Tin Zinc Matt Grey plating (VG approved / RoHS compliant) | A241 |
| Zinc Cobalt, black plating (RoHS compliant) | A232 |
| Zinc Nickel plating (RoHS compliant) | A240 |
| Nickel plating (RoHS compliant) | A34 |

An example using these modifications:
KPT2E10-6P-EW-A232

* Note: Modification -F42 can only be used with Styles 0, 1, 6, 7 and 8. See details on pg 13

## KPSE:

Multiple codes can be used in order of listing below:

| Endbell | |
|---|---|
| heat shrink boot adapter, grommet seal | DN |
| Banding adapter for heat shrink boot and grommet seal, shielded | DT |
| shielded, heat shrink boot adapter, grommet seal | DZ |
| without endbell, grommet and ferrule | F42* |

| Endbell for PG cable gland, class PG only | |
|---|---|
| PG09 thread for connectors with shell size 10 | P9 |
| PG11 thread for connectors with shell size 12 | P11 |
| PG13,5 thread for connectors with shell size 14 | P13,5 |
| PG16 thread for connectors with shell size 16 | P16 |
| PG21 thread for connectors with shell size 18, 20, 22 | P21 |
| PG29 thread for connectors with shell size 24 | P29 |

| Endbell for Metric cable gland, class ME only | |
|---|---|
| M12 thread for connectors with shell size 10 | M12 |
| M16 thread for connectors with shell size 12 | M16 |
| M20 thread for connectors with shell size 16 | M20 |
| M25 thread for connectors with shell size 18, 20 | M25 |
| M32 thread for connectors with shell size 22, 24 | M32 |

| Plating (Cadmium with olive drab chromate plating is standard - without code; Alternative platings below) | |
|---|---|
| Tin Zinc Matt Grey plating (VG approved / RoHS compliant) | A241 |
| Zinc Cobalt, black plating (RoHS compliant) | A232 |
| Zinc Nickel plating (RoHS compliant) | A240 |
| Nickel plating (RoHS compliant) | A34 |

| Contact | |
|---|---|
| Connector without contacts | F0 |

An example using these modifications:
KPSE7F16-8S-A240-F0

* Note: Modification -F42 can only be used with Styles 0, 1, 6, 7 and 8. See details on pg 13

## KPTC:

Multiple codes can be used in order of listing below:

| Plating | |
|---|---|
| Nickel plating (RoHS compliant) | C |
| Tin Zinc Matt Grey plating (VG approved / RoHS compliant) | G |
| Zinc Cobalt black plating (RoHS compliant) | R |
| Zinc Nickel plating (RoHS compliant) | H |
| Cadmium with olive drab chromate | D |

| Endbell | |
|---|---|
| heat shrink boot adapter, grommet seal | DN |
| Banding adapter for heat shrink boot and grommet seal, shielded | DT |
| shielded, heat shrink boot adapter, grommet seal | DZ |
| without endbell, grommet and ferrule | F42* |

| Endbell for PG cable gland, class PG only | |
|---|---|
| PG09 thread for connectors with shell size 10 | P9 |
| PG11 thread for connectors with shell size 12 | P11 |
| PG13,5 thread for connectors with shell size 14 | P13,5 |
| PG16 thread for connectors with shell size 16 | P16 |
| PG21 thread for connectors with shell size 18, 20, 22 | P21 |
| PG29 thread for connectors with shell size 24 | P29 |

| Endbell for Metric cable gland, class ME only | |
|---|---|
| M12 thread for connectors with shell size 10 | M12 |
| M16 thread for connectors with shell size 12 | M16 |
| M20 thread for connectors with shell size 16 | M20 |
| M25 thread for connectors with shell size 18, 20 | M25 |
| M32 thread for connectors with shell size 22, 24 | M32 |

| Contact | |
|---|---|
| Connector supplied with solder pot contacts installed | MA |
| Connector supplied with crimp contacts | MB |
| PCB solder pin 0,76 x 7mm (style 02 and 07 only) | EX |
| PCB solder pin 0,6 x 7mm (style 02 and 07 only) | EW |

An example using these modifications:
KPTC6F14-18P-H-MB

* Note: Modification -F42 can only be used with Styles 0, 1, 6, 7 and 8. See details on pg 13

## Endbell Modification -F42

Below table shows the different threads that come with the respective shell sizes when choosing the modification -F42 (no endbell/grommet seal). This modification is only applicable to styles 0 (wall mounting receptacle), 1 (cable connecting plug), 6 (straight plug) and 8 (90° angle plug). The only exception being KP*7A, as this combination already has no endbell/grommet.

| Shell size | Thread |
|---|---|
| **8** | 7/16-28UNEF |
| **10** | 9/16-24UNEF |
| **12** | 11/16-24UNEF |
| **14** | 13/16-20UNEF |
| **16** | 15/16-20UNEF |
| **18** | 1-1/16-18UNEF |
| **20** | 1-3/16-18UNEF |
| **22** | 1-5/16-18UNEF |
| **24** | 1-7/16-18UNEF |

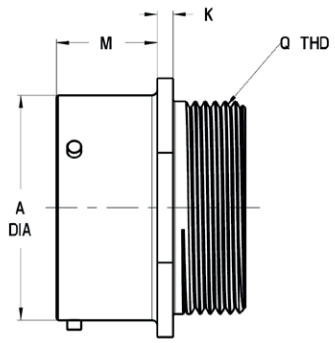


Drawing shows KP*1 Style

# How to order

## VG Order reference

VG95328 A 18-1 S N 1 J

**Specification**

**Shell type** see page 36

A – wall mounting receptacle with straight endbell
B – wall mounting receptacle with cable clamp
C – box mounting receptacle
D – jam nut receptacle
E – jam nut receptacle with cable clamp
J – straight plug with adapter DN
K – straight plug with cable clamp
M – straight plug, version DZ
R – wall mounting receptacle, version DZ
S – jam nut receptacle with adapter DN

**Shell size** 8, 10, 12, 14, 16, 18, 20, 22 and 24

**Contact arrangements** see page 14-16

**Contact type** P – pin S – socket

**Alternate insert position** see page 17

**With / without contacts**

Without identification = with contacts
With -1 identification = without contacts

**Plating**

Without identification = Cadmium, VG approved
Identification 'J' = RoHS, Matt Grey SnZn plating, VG approved

Dimensions shown in mm | Specifications and dimensions subject to change
This document solely applies to European manufactured KPT / KPSE / KPTC products

## CONTACT ARRANGEMENTS

| View on mating face of pin insulator | No. of contacts | Contact arrangements<br>Contact size<br>AWG | Service rating | Insulator position | | | |
|---|---|---|---|---|---|---|---|
| | | | | W | X | Y | Z |
| | 2 | **8-2** ▲△<br>20 | 1 | 58 | 122 | – | – |
| | 3 | **8-3** ▲△<br>20 | 1 | 60 | 210 | – | – |
| | 3 | **8-3A** △•◊<br>20 | 1 | 60 | 210 | – | – |
| | 3 | **8-33** ▲◊△<br>20 | 1 | 90 | – | – | – |
| | 4 | **8-4** ▲△<br>20 | 1 | 45 | – | – | – |
| 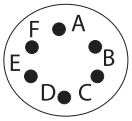 | 6 | **10-6** ▲•△◊<br>20 | 1 | 90 | – | – | – |
| 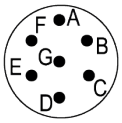 | 7 | **10-7** ▲△<br>20 | 1 | 90 | – | – | – |
| 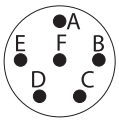 | 6 | **10-98** ▲△<br>20 | 1 | 90 | 180 | 240 | 270 |
| 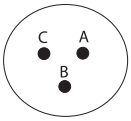 | 3 | **12-3** ▲•△◊<br>16 | 2 | – | – | 180 | – |
| 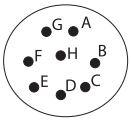 | 8 | **12-8** ▲△<br>20 | 1 | 90 | 112 | 203 | 292 |
| 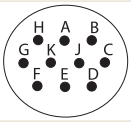 | 10 | **12-10** ▲•△◊<br>20 | 1 | 60 | 155 | 270 | 295 |
| 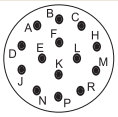 | 14 | **12-14** ▲△<br>20 | 1 | 60 | 155 | 270 | 295 |
| 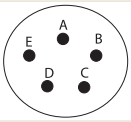 | 5 | **14-5** ▲•△◊<br>16 | 2 | 40 | 92 | 184 | 273 |
| 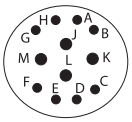 | 12 | **14-12** ▲•△◊<br>20(8)<br>16(4) | 1 | 43 | 90 | – | – |

Legend ▲KPT ◊KPSE △KPTC •authorized per VG95328

## CONTACT ARRANGEMENTS

| View on mating face of pin insulator | No. of contacts | Contact arrangements<br>Contact size<br>AWG | Service rating | Insulator position | | | |
|---|---|---|---|---|---|---|---|
| | | | | W | X | Y | Z |
| 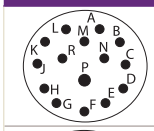 | 15 | **14-15** ▲•△◊<br>20 (14)<br>16 (1) | 1 | 17 | 110 | 155 | 234 |
| 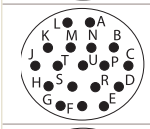 | 18 | **14-18** ▲△<br>20 | 1 | 15 | 90 | 180 | 270 |
| 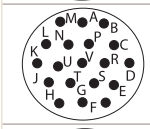 | 19 | **14-19** ▲•△◊<br>20 | 1 | 30 | 165 | 315 | – |
| 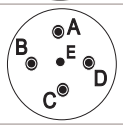 | 5 | **14-22** ◊<br>12 (4)<br>20 (1) | 1 | – | – | – | – |
| 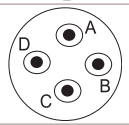 | 4 | **14A4** ▲<br>Coax RG 188 U<br>(not for receptacle shell style 02) | 1 | – | – | – | – |
| 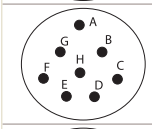 | 8 | **16-8** ▲•△◊<br>16 | 2 | 54 | 152 | 180 | 331 |
| 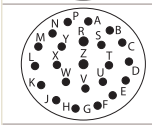 | 23 | **16-23** ▲•△◊<br>20 (22)<br>16 (1) | 1 | 158 | – | – | – |
| 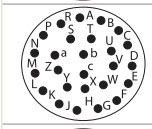 | 26 | **16-26** ▲•△◊<br>20 | 1 | 60 | – | 275 | 338 |
| 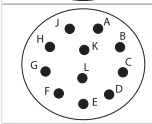 | 11 | **18-11** ▲•△◊<br>16 | 2 | 62 | 119 | 241 | 340 |
| 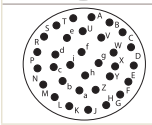 | 32 | **18-32** ▲•△◊<br>20 | 1 | 85 | 138 | 222 | 265 |

Legend ▲KPT ◊KPSE △KPTC •authorized per VG95328

Dimensions shown in mm | Specifications and dimensions subject to change
This document solely applies to European manufactured KPT / KPSE / KPTC products

## CONTACT ARRANGEMENTS

| View on mating face of pin insulator | No. of contacts | Contact arrangements<br>Contact size<br>AWG | Service rating | Insulator position | | | |
|---|---|---|---|---|---|---|---|
| | | | | W | X | Y | Z |
| 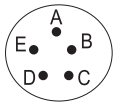 | 5 | **20A6** ◊<br>12<br>Note: contacts are 1 grounding pin and 4 standard size 12 pins | 2 | 90 | 180 | 270 | – |
| 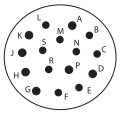 | 16 | **20-16** ▲•△◊<br>16 | 2 | 238 | 318 | 333 | 347 |
| 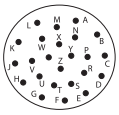 | 24 | **20-24** ▲△<br>20 | 1 | 70 | 145 | 215 | 290 |
| 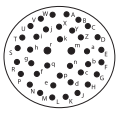 | 39 | **20-39** ▲•△◊<br>20(37)<br>16(2) | 1 | 63 | 144 | 252 | 333 |
| 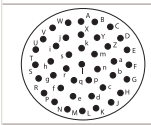 | 41 | **20-41** ▲•△◊<br>20 | 1 | 45 | 126 | 225 | w– |
| 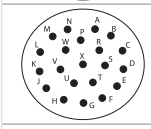 | 21 | **22-21** ▲•△◊<br>16 | 2 | 16 | 135 | 175 | 349 |
| 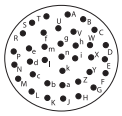 | 36 | **22-36** ▲△<br>20 | 1 | 72 | 144 | 216 | 288 |
| 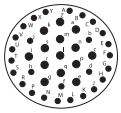 | 41 | **22-41** ▲△<br>20(27)<br>16(14) | 1<br>2 | 39 | 135 | 264 | – |
| 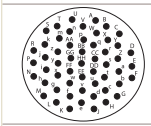 | 55 | **22-55** ▲•△◊<br>20 | 1 | 30 | 142 | 226 | 314 |
| 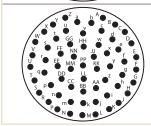 | 61 | **24-61** ▲•△◊<br>20 | 1 | 90 | 180 | 270 | 324 |

Legend ▲KPT ◊KPSE △KPTC •authorized per VG95328

## ALTERNATE INSERT POSITION

The diagram indicates alternate insert positions.
The six positions N, V, W, Y, Z differ in degree of rotation for various sizes and arrangements. For the exact degree of rotation, for the list of contact arrangements and for alternate positions available, refer to the table at the right.

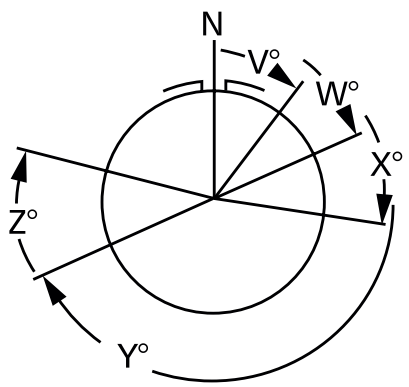


| Shell size | No. of contacts | Contact arrangements | Degree of Rotation | | | | |
|---|---|---|---|---|---|---|---|
| | | | V | W | X | Y | Z |
| 8 | 2 | 8-2 | – | 58 | 122 | – | – |
| | 3 | 8-3 | – | 60 | 210 | – | – |
| | 3 | 8-3A | – | 60 | – | – | – |
| | 3 | 8-33 | – | 90 | – | – | – |
| | 4 | 8-4 | – | 45 | – | – | – |
| 10 | 6 | 10-6 | – | 90 | – | – | – |
| | 7 | 10-7 | – | 90 | – | – | – |
| | 6 | 10-98 | – | 90 | 180 | 240 | 270 |
| 12 | 3 | 12-3 | – | – | – | 180 | – |
| | 8 | 12-8 | – | 90 | 112 | 203 | 292 |
| | 10 | 12-10 | – | 60 | 155 | 270 | 295 |
| | 14 | 12-14 | – | 60 | 155 | 270 | 295 |
| 14 | 4 | 14A4 | – | – | – | – | – |
| | 5 | 14-5 | – | 40 | 92 | 184 | 273 |
| | 12 | 14-12 | – | 43 | 90 | – | – |
| | 15 | 14-15 | – | 17 | 110 | 155 | 234 |
| | 18 | 14-18 | – | 15 | 90 | 180 | 270 |
| | 19 | 14-19 | – | 30 | 165 | 315 | – |
| | 5 | 14-22 | – | – | – | – | – |
| 16 | 8 | 16-8 | – | 54 | 52 | 180 | 331 |
| | 23 | 16-23 | – | 158 | – | – | – |
| | 26 | 16-26 | – | 60 | – | 275 | 338 |
| 18 | 11 | 18-11 | – | 62 | 119 | 241 | 340 |
| | 32 | 18-32 | – | 85 | 138 | 222 | 265 |
| 20 | 5 | 20A6* | – | 90 | 180 | 270 | – |
| | 16 | 20-16 | – | 238 | 318 | 333 | 347 |
| | 24 | 20-24 | – | 70 | 145 | 215 | 290 |
| | 39 | 20-39 | – | 63 | 144 | 252 | 333 |
| | 41 | 20-41 | – | 45 | 126 | 225 | – |
| 22 | 21 | 22-21 | – | 16 | 135 | 175 | 349 |
| | 36 | 22-36 | – | 72 | 144 | 216 | 288 |
| | 41 | 22-41 | – | 39 | 135 | 264 | – |
| | 55 | 22-55 | – | 30 | 142 | 226 | 314 |
| 24 | 61 | 24-61 | – | 90 | 180 | 270 | 324 |

*** This contact arrangement features five contacts size 12. Four standard contacts and one is a first-to-mate contact.**

## **WALL MOUNTING RECEPTACLES** KPT00A / KPSE00A / KPTC0A

Description: Wall Mounting Receptacle with an endbell with thread, no grommet seal.

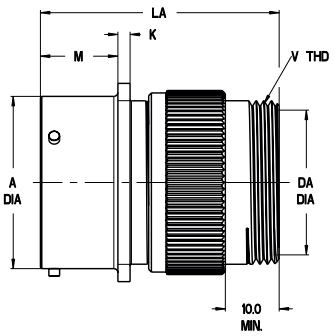


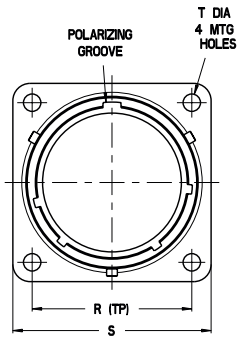


| Shell size | Ø A +0,03 – 0,13 | K ±0,1 | M ±0,15 | R ±0,15 | S max. | Ø T ±0,15 | Ø $D_A$ min. | $L_A$ max. | $V_{THD}$ Thread Type 2A |
|---|---|---|---|---|---|---|---|---|---|
| **8** | 12,00 | 1,9 | 11,6 | 15,1 | 21,0 | 3,05 | 8,5 | 38,0 | 1/2-28UNEF |
| **10** | 15,00 | 1,9 | 11,6 | 18,3 | 24,2 | 3,05 | 11,8 | 38,0 | 5/8-24UNEF |
| **12** | 19,05 | 1,9 | 11,6 | 20,6 | 26,6 | 3,05 | 15,0 | 38,0 | 3/4-20UNEF |
| **14** | 22,23 | 1,9 | 11,6 | 23,0 | 29,0 | 3,05 | 17,9 | 38,0 | 7/8-20UNEF |
| **16** | 25,40 | 1,9 | 11,6 | 24,6 | 31,3 | 3,05 | 21,1 | 38,0 | 1-20UNEF |
| **18** | 28,58 | 1,9 | 11,6 | 27,0 | 33,7 | 3,05 | 24,1 | 38,0 | 1-3/16-18UNEF |
| **20** | 31,75 | 2,2 | 14,25 | 29,4 | 36,9 | 3,05 | 26,5 | 43,1 | 1-3/16-18UNEF |
| **22** | 34,93 | 2,2 | 14,25 | 31,8 | 40,1 | 3,05 | 30,4 | 43,1 | 1-7/16-18UNEF |
| **24** | 38,10 | 2,2 | 15,1 | 34,9 | 43,3 | 3,75 | 32,8 | 43,1 | 1-7/16-18UNEF |

## **WALL MOUNTING RECEPTACLES** KPT00E / KPSE00E (VG95328A) / KPTC0E

Description: Wall Mounting Receptacle with pressure nut and grommet seal.

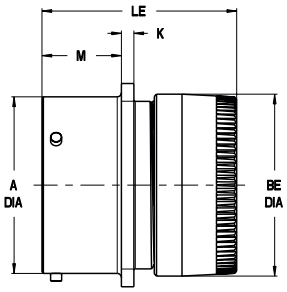


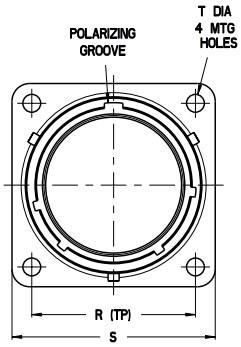


| Shell size | Ø A +0,03 – 0,13 | K ±0,1 | M ±0,15 | R ±0,15 | S max. | Ø T ±0,15 | Ø $B_E$ max. | $L_E$ max. |
|---|---|---|---|---|---|---|---|---|
| **8** | 12,00 | 1,9 | 11,6 | 15,1 | 21,0 | 3,05 | 14,2 | 32,5 |
| **10** | 15,00 | 1,9 | 11,6 | 18,3 | 24,2 | 3,05 | 17,2 | 32,5 |
| **12** | 19,05 | 1,9 | 11,6 | 20,6 | 26,6 | 3,05 | 20,4 | 32,5 |
| **14** | 22,23 | 1,9 | 11,6 | 23,0 | 29,0 | 3,05 | 23,4 | 32,5 |
| **16** | 25,40 | 1,9 | 11,6 | 24,6 | 31,3 | 3,05 | 26,6 | 32,5 |
| **18** | 28,58 | 1,9 | 11,6 | 27,0 | 33,7 | 3,05 | 29,6 | 32,5 |
| **20** | 31,75 | 2,2 | 14,25 | 29,4 | 36,9 | 3,05 | 32,8 | 34,5 |
| **22** | 34,93 | 2,2 | 14,25 | 31,8 | 40,1 | 3,05 | 36,0 | 34,5 |
| **24** | 38,10 | 2,2 | 15,1 | 34,9 | 43,3 | 3,75 | 39,2 | 34,5 |

## **WALL MOUNTING RECEPTACLES** KPT00F / KPSE00F (VG95328B) / KPTC0F

Description: Wall Mounting Receptacle with endbell, cable clamp and grommet seal.

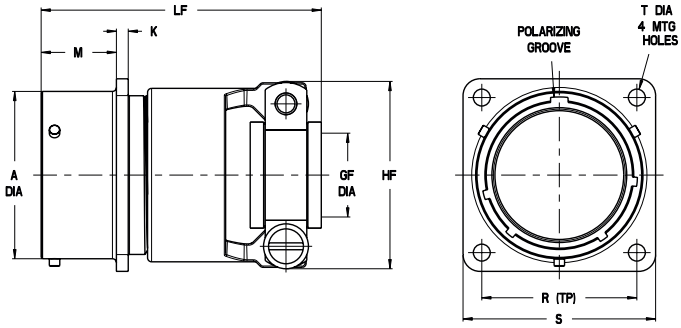


| Shell size | Ø A +0,03 – 0,13 | K ±0,1 | M ±0,15 | R ±0,15 | S max. | Ø T ±0,15 | Ø $G_F$ min. | $H_F$ max. | $L_F$ max. |
|---|---|---|---|---|---|---|---|---|---|
| **8** | 12,00 | 1,9 | 11,6 | 15,1 | 21,0 | 3,05 | 2,9 | 19,3 | 56,0 |
| **10** | 15,00 | 1,9 | 11,6 | 18,3 | 24,2 | 3,05 | 4,5 | 20,8 | 56,0 |
| **12** | 19,05 | 1,9 | 11,6 | 20,6 | 26,6 | 3,05 | 7,7 | 24,4 | 56,0 |
| **14** | 22,23 | 1,9 | 11,6 | 23,0 | 29,0 | 3,05 | 9,3 | 27,2 | 56,0 |
| **16** | 25,40 | 1,9 | 11,6 | 24,6 | 31,3 | 3,05 | 12,4 | 28,7 | 56,0 |
| **18** | 28,58 | 1,9 | 11,6 | 27,0 | 33,7 | 3,05 | 15,6 | 35,3 | 56,0 |
| **20** | 31,75 | 2,2 | 14,25 | 29,4 | 36,9 | 3,05 | 15,6 | 35,3 | 61,0 |
| **22** | 34,93 | 2,2 | 14,25 | 31,8 | 40,1 | 3,05 | 18,8 | 39,9 | 61,0 |
| **24** | 38,10 | 2,2 | 15,1 | 34,9 | 43,3 | 3,75 | 20,1 | 43,2 | 61,0 |

## **WALL MOUNTING RECEPTACLES** KPT0E...DN / KPSE0E...DN / KPTC0E...DN

Description: Wall Mounting Receptacle with endbell for heat shrink boot and grommet seal.

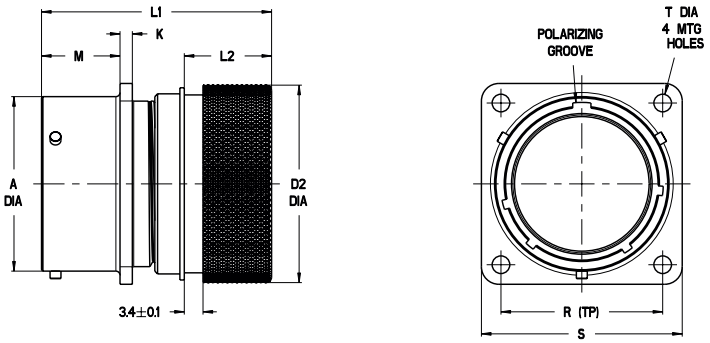


| Shell size | Ø A +0,03 – 0,13 | K ±0,1 | M ±0,15 | R ±0,15 | S max. | Ø T ±0,15 | Ø D2 –0,5 | L1 max. | L2 ±0,5 |
|---|---|---|---|---|---|---|---|---|---|
| **8** | 12,00 | 1,9 | 11,6 | 15,1 | 21,0 | 3,05 | 15,6 | 35,0 | 12,2 |
| **10** | 15,00 | 1,9 | 11,6 | 18,3 | 24,2 | 3,05 | 18,4 | 35,0 | 12,2 |
| **12** | 19,05 | 1,9 | 11,6 | 20,6 | 26.6 | 3,05 | 23,7 | 35,0 | 12,2 |
| **14** | 22,23 | 1,9 | 11,6 | 23,0 | 29,0 | 3,05 | 24,5 | 35,0 | 12,2 |
| **16** | 25,40 | 1,9 | 11,6 | 24,6 | 31,3 | 3,05 | 29,8 | 37,0 | 14,5 |
| **18** | 28,58 | 1,9 | 11,6 | 27,0 | 33,7 | 3,05 | 32,0 | 37,0 | 14,5 |
| **20** | 31,75 | 2,2 | 14,25 | 29,4 | 36,9 | 3,05 | 36,1 | 42,0 | 15,8 |
| **22** | 34,93 | 2,2 | 14,25 | 31,8 | 40,1 | 3,05 | 38,5 | 42,0 | 15,8 |
| **24** | 38,10 | 2,2 | 15,1 | 34,9 | 43,3 | 3,75 | 41,6 | 42,0 | 14,9 |

Dimensions shown in mm | Specifications and dimensions subject to change
This document solely applies to European manufactured KPT / KPSE / KPTC products

## **WALL MOUNTING RECEPTACLES** KPT0E...DZ / KPSE0E...DZ (VG95328R) / KPTC0E…DZ

Description: Wall Mounting Receptacle with endbell for heat shrink boot and grommet seal, shielded.

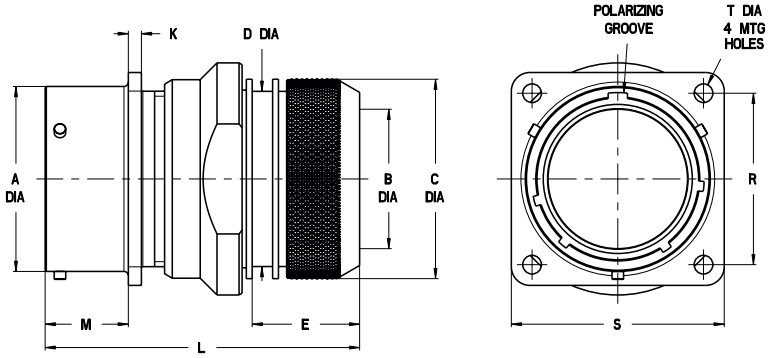


| Shell size | Ø A +0,03 – 0,13 | Ø B min. | Ø C ±0,5 | Ø D max. | E ±1,0 | K ±0,1 | L max. | M ±0,15 | R ±0,15 | S max. | Ø T ±0,15 |
|---|---|---|---|---|---|---|---|---|---|---|---|
| **8** | 12,00 | 6,6 | 16,0 | 13,3 | 15,0 | 1,9 | 52,0 | 11,6 | 15,1 | 21,0 | 3,05 |
| **10** | 15,00 | 9,2 | 18,0 | 16,1 | 15,0 | 1,9 | 52,0 | 11,6 | 18,3 | 24,2 | 3,05 |
| **12** | 19,05 | 12,2 | 22,0 | 20,0 | 17,0 | 1,9 | 52,0 | 11,6 | 20,6 | 26,6 | 3,05 |
| **14** | 22,23 | 15,2 | 25,0 | 22,2 | 18,0 | 1,9 | 53,0 | 11,6 | 23,0 | 29,0 | 3,05 |
| **16** | 25,40 | 18,3 | 28,0 | 26,2 | 18,0 | 1,9 | 53,0 | 11,6 | 24,6 | 31,3 | 3,05 |
| **18** | 28,58 | 20,0 | 32,0 | 28,5 | 18,0 | 1,9 | 53,0 | 11,6 | 27,0 | 33,7 | 3,05 |
| **20** | 31,75 | 23,0 | 34,0 | 32,5 | 18,0 | 2,2 | 58,0 | 14,25 | 29,4 | 36,9 | 3,05 |
| **22** | 34,93 | 26,0 | 38,0 | 34,8 | 18,0 | 2,2 | 58,0 | 14,25 | 31,7 | 40,1 | 3,05 |
| **24** | 38,10 | 28,8 | 41,0 | 37,9 | 18,0 | 2,2 | 58,0 | 15,1 | 34,9 | 43,3 | 3,75 |

## **WALL MOUNTING RECEPTACLE WITH BANDING ADAPTER** KPSE0 / KPT0 / KPTC0 … DT

Description: Wall Mounting Receptacle with banding adapter for heat shrink boot and grommet seal, shielded.

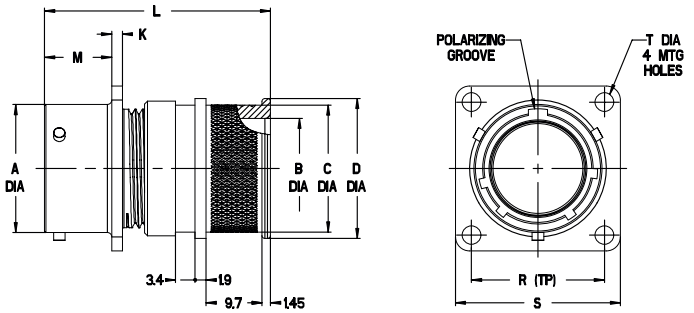


| Shell size | Ø A +0,03 – 0,13 | Ø B ±0.2 | Ø C ±0.2 | Ø D ±0.2 | K ±0.1 | L max. | M ±0.15 | R ±0.15 | S max. | Ø T ±0,15 |
|---|---|---|---|---|---|---|---|---|---|---|
| **8** | 12.0 | 8.2 | 13.1 | 15.35 | 1.9 | 39.3 | 11.6 | 15.0 | 21.0 | 3.05 |
| **10** | 15.0 | 11.4 | 15.9 | 18.15 | 1.9 | 39.3 | 11.6 | 18.3 | 24.2 | 3.05 |
| **12** | 19.05 | 14.5 | 21.2 | 23.45 | 1.9 | 40.1 | 11.6 | 20.6 | 26.6 | 3.05 |
| **14** | 22.23 | 17.4 | 22.0 | 24.25 | 1.9 | 40.1 | 11.6 | 23.00 | 29.0 | 3.05 |
| **16** | 25.40 | 20.7 | 26.0 | 29.55 | 1.9 | 40.1 | 11.6 | 24.6 | 31.3 | 3.05 |
| **18** | 28.58 | 23.2 | 28.2 | 31.75 | 1.9 | 40.1 | 11.6 | 27.0 | 33.7 | 3.05 |
| **20** | 31.75 | 26.4 | 32.3 | 35.85 | 2.2 | 43.4 | 14.25 | 29.4 | 36.9 | 3.05 |
| **22** | 34.93 | 29.5 | 34.6 | 38.25 | 2.2 | 43.4 | 14.25 | 31.8 | 40.1 | 3.05 |
| **24** | 38.10 | 32.7 | 37.7 | 41.35 | 2.2 | 45.3 | 14.25 | 34.9 | 43.3 | 3.75 |

For corresponding tooling and banding, please contact the factory for assembly instructions CAS25098
Banding adapters should be used for individual wires only. For use with jacketed cables consult factory.

## **CABLE CONNECTING RECEPTACLES** KPT01A / KPSE01A / KPTC1A

Description: Cable connecting receptacle with an endbell with thread, no grommet seal.

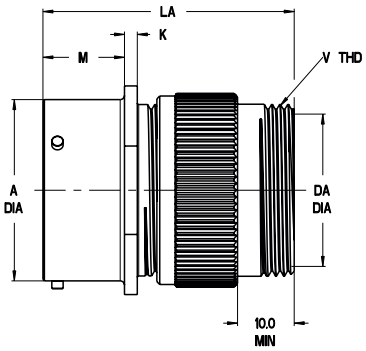


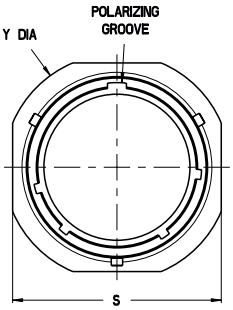


| Shell size | Ø A +0,03 – 0,13 | K ±0,1 | M ±0,15 | S max. | Ø Y ±0.2 | Ø DA min. | LA max. | VTHD Thread Type 2A |
|---|---|---|---|---|---|---|---|---|
| **8** | 12,00 | 1,9 | 11,6 | 21,0 | 23,8 | 8,5 | 38,0 | 1/2-28UNEF |
| **10** | 15,00 | 1,9 | 11,6 | 24,2 | 26,9 | 11,8 | 38,0 | 5/8-24UNEF |
| **12** | 19,05 | 1,9 | 11,6 | 26,55 | 29,3 | 15,0 | 38,0 | 3/4-20UNEF |
| **14** | 22,23 | 1,9 | 11,6 | 28,9 | 31,7 | 17,9 | 38,0 | 7/8-20UNEF |
| **16** | 25,40 | 1,9 | 11,6 | 31,3 | 34,1 | 21,1 | 38,0 | 1-20UNEF |
| **18** | 28,58 | 1,9 | 11,6 | 33,7 | 36,5 | 24,1 | 38,0 | 1-3/16-18UNEF |
| **20** | 31,75 | 2,2 | 14,25 | 36,9 | 39,6 | 26,5 | 43,1 | 1-3/16-18UNEF |
| **22** | 34,93 | 2,2 | 14,25 | 40,0 | 42,8 | 30,4 | 43,1 | 1-7/16-18UNEF |
| **24** | 38,10 | 2,2 | 15,1 | 43,2 | 46,0 | 32,8 | 43,1 | 1-7/16-18UNEF |

## **CABLE CONNECTING RECEPTACLES** KPT01E / KPSE01E / KPTC1E

Description: Cable connecting receptacle with pressure nut and grommet seal.

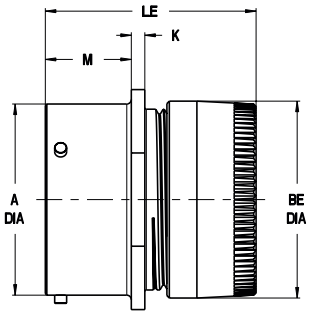


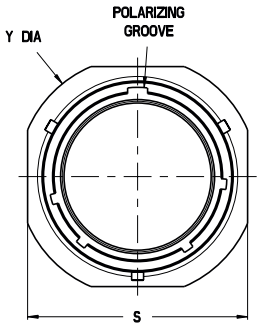


| Shell size | Ø A +0,03 – 0,13 | K ±0,1 | M ±0,15 | S max. | Ø Y ±0.2 | Ø BE max. | LE max. |
|---|---|---|---|---|---|---|---|
| **8** | 12,00 | 1,9 | 11,6 | 21,0 | 23,8 | 14,2 | 32,5 |
| **10** | 15,00 | 1,9 | 11,6 | 24,2 | 26,9 | 17,2 | 32,5 |
| **12** | 19,05 | 1,9 | 11,6 | 26,55 | 29,3 | 20,4 | 32,5 |
| **14** | 22,23 | 1,9 | 11,6 | 28,9 | 31,7 | 23,4 | 32,5 |
| **16** | 25,40 | 1,9 | 11,6 | 31,3 | 34,1 | 26,6 | 32,5 |
| **18** | 28,58 | 1,9 | 11,6 | 33,7 | 36,5 | 29,6 | 32,5 |
| **20** | 31,75 | 2,2 | 14,25 | 36,9 | 39,6 | 32,8 | 34,5 |
| **22** | 34,93 | 2,2 | 14,25 | 40,0 | 42,8 | 36,0 | 34,5 |
| **24** | 38,10 | 2,2 | 15,1 | 43,2 | 46,0 | 39,2 | 34,5 |

Dimensions shown in mm | Specifications and dimensions subject to change
This document solely applies to European manufactured KPT / KPSE / KPTC products

## **CABLE CONNECTING RECEPTACLES** KPT01F / KPSE01F / KPTC1F

Description: Cable connecting receptacle with endbell, cable clamp and grommet seal.

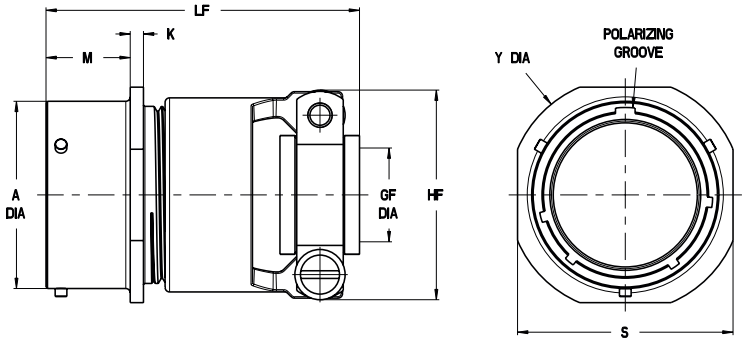


| Shell size | Ø A +0,03 – 0,13 | K ±0,1 | M ±0,15 | S max. | Ø Y ±0.2 | Ø $G_F$ min. | $H_F$ max. | $L_F$ max. |
|---|---|---|---|---|---|---|---|---|
| **8** | 12,00 | 1,9 | 11,6 | 21,0 | 23,8 | 2,9 | 19,3 | 56,0 |
| **10** | 15,00 | 1,9 | 11,6 | 24,2 | 26,9 | 4,5 | 20,8 | 56,0 |
| **12** | 19,05 | 1,9 | 11,6 | 26,55 | 29,3 | 7,7 | 24,4 | 56,0 |
| **14** | 22,23 | 1,9 | 11,6 | 28,9 | 31,7 | 9,3 | 27,2 | 56,0 |
| **16** | 25,40 | 1,9 | 11,6 | 31,3 | 34,1 | 12,4 | 28,7 | 56,0 |
| **18** | 28,58 | 1,9 | 11,6 | 33,7 | 36,5 | 15,6 | 35,3 | 56,0 |
| **20** | 31,75 | 2,2 | 14,25 | 36,9 | 39,6 | 15,6 | 35,3 | 61,0 |
| **22** | 34,93 | 2,2 | 14,25 | 40,0 | 42,8 | 18,8 | 39,9 | 61,0 |
| **24** | 38,10 | 2,2 | 15,1 | 43,2 | 46,0 | 20,1 | 43,2 | 61,0 |

## **CABLE CONNECTING RECEPTACLES** KPT1E...DN / KPSE1E...DN / KPTC1E...DN

Description: Cable connecting receptacle with endbell for heat shrink boot and grommet seal.

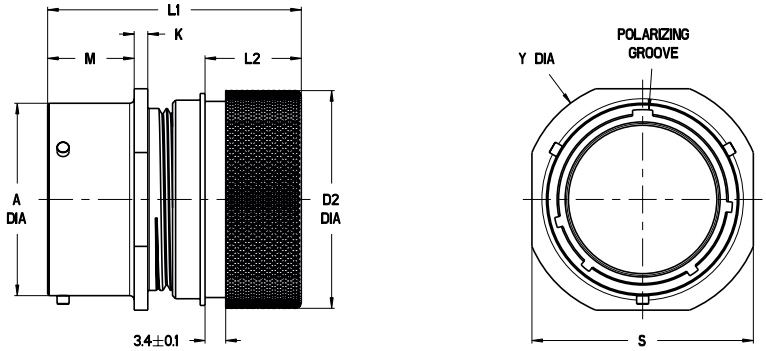


| Shell size | Ø A +0,03 – 0,13 | K ±0,1 | M ±0,15 | S max. | Ø Y ±0.2 | Ø D2 –0,5 | L1 max. | L2 ±0,5 |
|---|---|---|---|---|---|---|---|---|
| **8** | 12,00 | 1,9 | 11,6 | 21,0 | 23,8 | 15,6 | 35,0 | 12,2 |
| **10** | 15,00 | 1,9 | 11,6 | 24,2 | 26,9 | 18,4 | 35,0 | 12,2 |
| **12** | 19,05 | 1,9 | 11,6 | 26,55 | 29,3 | 23,7 | 35,0 | 12,2 |
| **14** | 22,23 | 1,9 | 11,6 | 28,9 | 31,7 | 24,5 | 35,0 | 12,2 |
| **16** | 25,40 | 1,9 | 11,6 | 31,3 | 34,1 | 29,8 | 37,0 | 14,5 |
| **18** | 28,58 | 1,9 | 11,6 | 33,7 | 36,5 | 32,0 | 37,0 | 14,5 |
| **20** | 31,75 | 2,2 | 14,25 | 36,9 | 39,6 | 36,1 | 42,0 | 15,8 |
| **22** | 34,93 | 2,2 | 14,25 | 40,0 | 42,8 | 38,5 | 42,0 | 15,8 |
| **24** | 38,10 | 2,2 | 15,1 | 43,2 | 46,0 | 41,6 | 42,0 | 14,9 |

## **CABLE CONNECTING RECEPTACLES** KPT1E...DZ / KPSE1E...DZ / KPTC1E...DZ

Description: Cable connecting receptacle with endbell for heat shrink boot and grommet seal, shielded.

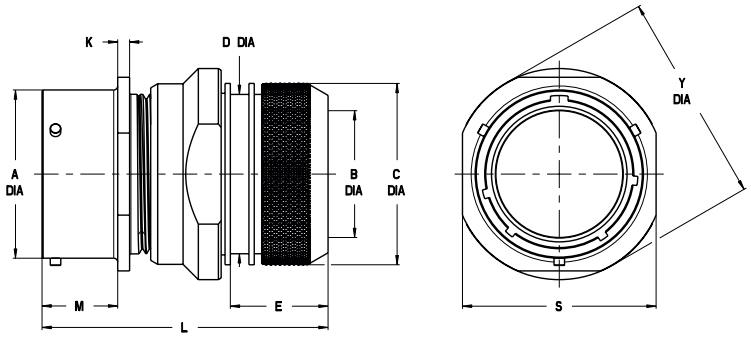


| Shell size | Ø A +0,03–0,13 | M ±0,15 | Ø B min. | Ø C ±0,5 | Ø D max. | E ±1,0 | K ±0,1 | L max. | S max. | Ø Y ±0.2 |
|---|---|---|---|---|---|---|---|---|---|---|
| **8** | 12,00 | 11,6 | 6,6 | 16,0 | 13,3 | 15,0 | 1,9 | 52,0 | 21,0 | 23,8 |
| **10** | 15,00 | 11,6 | 9,2 | 18,0 | 16,1 | 15,0 | 1,9 | 52,0 | 24,2 | 26,9 |
| **12** | 19,05 | 11,6 | 12,2 | 22,0 | 20,0 | 17,0 | 1,9 | 52,0 | 26,55 | 29,3 |
| **14** | 22,23 | 11,6 | 15,2 | 25,0 | 22,2 | 18,0 | 1,9 | 53,0 | 28,9 | 31,7 |
| **16** | 25,40 | 11,6 | 18,3 | 28,0 | 26,2 | 18,0 | 1,9 | 53,0 | 31,3 | 34,1 |
| **18** | 28,58 | 11,6 | 20,0 | 32,0 | 28,5 | 18,0 | 1,9 | 53,0 | 33,7 | 36,5 |
| **20** | 31,75 | 14,25 | 23,0 | 34,0 | 32,5 | 18,0 | 2,2 | 58,0 | 36,9 | 39,6 |
| **22** | 34,93 | 14,25 | 26,0 | 38,0 | 34,8 | 18,0 | 2,2 | 58,0 | 40,0 | 42,8 |
| **24** | 38,10 | 14,25 | 28,8 | 41,0 | 37,9 | 18,0 | 2,2 | 58,0 | 43,2 | 46,0 |

## **CABLE CONNECTING RECEPTACLES** KPSE1 / KPT1 / KPTC1 … DT

Description: Cable connecting receptacle with banding adapter for heat shrink boot and grommet seal, shielded.

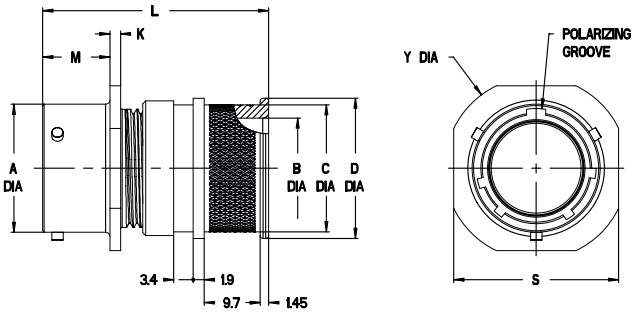


| Shell size | Ø A +0,03 – 0,13 | Ø B ±0.2 | Ø C ±0.2 | Ø D ±0.2 | K ±0.1 | L max. | M ±0.15 | S max. | Ø Y ±0.2 |
|---|---|---|---|---|---|---|---|---|---|
| **8** | 12.0 | 8.2 | 13.1 | 15.35 | 1.9 | 39.3 | 11.6 | 21,0 | 23,8 |
| **10** | 15.0 | 11.4 | 15.9 | 18.15 | 1.9 | 39.3 | 11.6 | 24,2 | 26,9 |
| **12** | 19.05 | 14.5 | 21.2 | 23.45 | 1.9 | 40.1 | 11.6 | 26,55 | 29,3 |
| **14** | 22.23 | 17.4 | 22.0 | 24.25 | 1.9 | 40.1 | 11.6 | 28,9 | 31,7 |
| **16** | 25.40 | 20.7 | 26.0 | 29.55 | 1.9 | 40.1 | 11.6 | 31,3 | 34,1 |
| **18** | 28.58 | 23.2 | 28.2 | 31.75 | 1.9 | 40.1 | 11.6 | 33,7 | 36,5 |
| **20** | 31.75 | 26.4 | 32.3 | 35.85 | 2.2 | 43.4 | 14.25 | 36,9 | 39,6 |
| **22** | 34.93 | 29.5 | 34.6 | 38.25 | 2.2 | 43.4 | 14.25 | 40,0 | 42,8 |
| **24** | 38.10 | 32.7 | 37.7 | 41.35 | 2.2 | 45.3 | 14.25 | 43,2 | 46,0 |

For corresponding tooling and banding, please contact the factory for assembly instructions CAS25098
Banding adapters should be used for individual wires only. For use with jacketed cables consult factory.

Dimensions shown in mm | Specifications and dimensions subject to change
This document solely applies to European manufactured KPT / KPSE / KPTC products

## **BOX MOUNTING RECEPTACLES** KPT02E (VG95328H) / KPSE02E (VG95328C) / KPTC2E

Description: box mounting receptacle with through holes in flange.

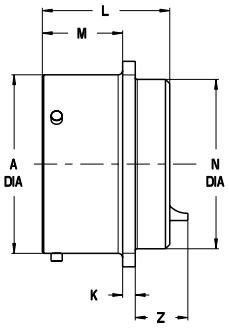


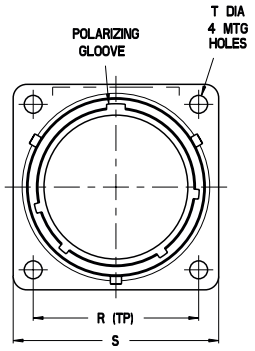


| KPT/KPSE/KPTC | | | | | | | | | KPT/KPTC |
|---|---|---|---|---|---|---|---|---|---|
| **Shell size** | **Ø A** +0,03–0,13 | **L** max. | **Ø N** max. | **K** ±0,1 | **M** ±0,15 | **R** ±0,15 | **S** max. | **Ø T** ±0,15 | **Z** max. |
| 8 | 12,00 | 21,1 | 11,1 | 1,9 | 11,6 | 15,1 | 21,0 | 3,05 | 12,3 |
| 10 | 15,00 | 21,1 | 14,3 | 1,9 | 11,6 | 18,3 | 24,2 | 3,05 | 12,3 |
| 12 | 19,05 | 21,1 | 17,5 | 1,9 | 11,6 | 20,6 | 26,6 | 3,05 | 12,3 |
| 14 | 22,23 | 21,1 | 20,6 | 1,9 | 11,6 | 23,0 | 29,0 | 3,05 | 12,3 |
| 16 | 25,40 | 21,1 | 23,8 | 1,9 | 11,6 | 24,6 | 31,3 | 3,05 | 12,3 |
| 18 | 28,58 | 21,1 | 27,0 | 1,9 | 11,6 | 27,0 | 33,7 | 3,05 | 12,3 |
| 20 | 31,75 | 22,7 | 30,2 | 2,2 | 14,25 | 29,4 | 36,9 | 3,05 | 10,8 |
| 22 | 34,93 | 22,7 | 33,4 | 2,2 | 14,25 | 31,8 | 40,1 | 3,05 | 10,8 |
| 24 | 38,10 | 22,7 | 36,5 | 2,2 | 15,1 | 34,9 | 43,3 | 3,75 | 10,0 |

## **THRU-BULKHEAD RECEPTACLES** KPTB (VG95328P)

Description: Bulkhead receptacle with mounting flange – with through holes.

INSERT: For example: KPTB14-19PS

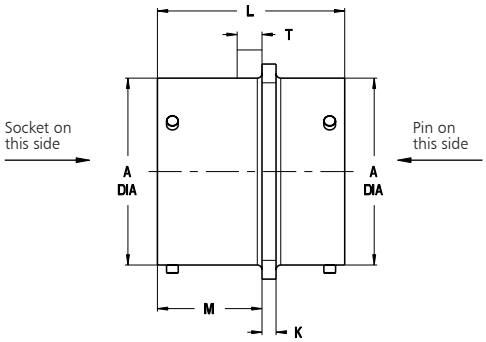


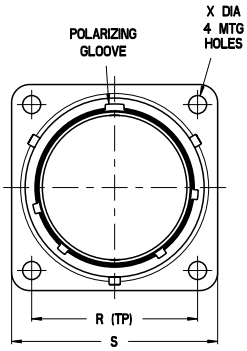


| Shell size | Ø A +0,03 – 0,13 | K ±0,1 | L max | M ±0,25 | T max | R ±0,15 | S max. | Ø X ±0,5 |
|---|---|---|---|---|---|---|---|---|
| **8** | 12,00 | 1,8 | 28,6 | 14,5 | 6,0 | 15,1 | 21,0 | 3,05 |
| **10** | 15,00 | 1,8 | 28,6 | 14,5 | 6,0 | 18,3 | 24,2 | 3,05 |
| **12** | 19,05 | 1,8 | 28,6 | 14,5 | 6,0 | 20,6 | 26,6 | 3,05 |
| **14** | 22,23 | 1,8 | 28,6 | 14,5 | 6,0 | 23,0 | 29,0 | 3,05 |
| **16** | 25,40 | 1,8 | 28,6 | 14,5 | 6,0 | 24,6 | 31,3 | 3,05 |
| **18** | 28,58 | 1,8 | 28,6 | 14,5 | 6,0 | 27,0 | 33,7 | 3,05 |
| **20** | 31,75 | 2,5 | 31,9 | 17,7 | 9,2 | 29,4 | 36,9 | 3,05 |
| **22** | 34,93 | 2,5 | 31,9 | 17,7 | 9,2 | 31,8 | 40,1 | 3,05 |
| **24** | 38,10 | 2,5 | 31,9 | 17,7 | 8,0 | 34,9 | 43,3 | 3,75 |

## **STRAIGHT PLUGS** KPT06A / KPSE06A / KPTC6A

Description: Straight plug with an endbell with thread, no grommet seal.

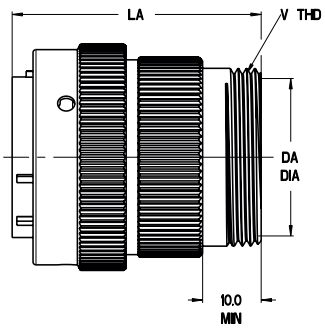


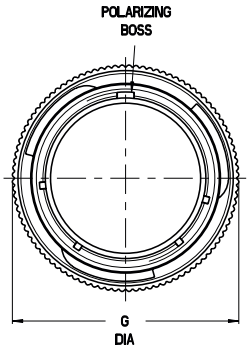


| Shell size | Ø G max. | Ø $D_A$ min. | $L_A$ max. | $V_{THD}$ Thread Type 2A |
|---|---|---|---|---|
| **8** | 19,8 | 8,5 | 42,0 | 1/2-28UNEF |
| **10** | 23,6 | 11,8 | 42,0 | 5/8-24UNEF |
| **12** | 26,5 | 15,0 | 42,0 | 3/4-20UNEF |
| **14** | 30,1 | 17,9 | 42,0 | 7/8-20UNEF |
| **16** | 33,2 | 21,1 | 42,0 | 1-20UNEF |
| **18** | 35,4 | 24,1 | 42,0 | 1-3/16-18UNEF |
| **20** | 39,0 | 26,5 | 45,0 | 1-3/16-18UNEF |
| **22** | 42,1 | 30,4 | 45,0 | 1-7/16-18UNEF |
| **24** | 45,2 | 32,8 | 45,0 | 1-7/16-18UNEF |

## **STRAIGHT PLUGS** KPT06E / KPSE06E / KPTC6E

Description: Straight plug with pressure nut and grommet seal.

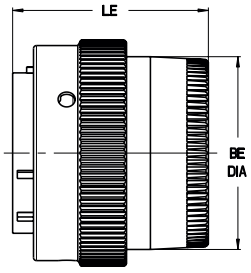


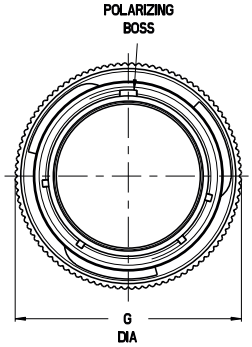


| Shell size | Ø G max. | Ø $B_E$ max. | $L_E$ max. |
|---|---|---|---|
| **8** | 19,8 | 14,2 | 32,5 |
| **10** | 23,6 | 17,2 | 32,5 |
| **12** | 26,5 | 20,4 | 32,5 |
| **14** | 30,1 | 23,4 | 32,5 |
| **16** | 33,2 | 26,6 | 32,5 |
| **18** | 35,4 | 29,6 | 32,5 |
| **20** | 39,0 | 32,8 | 34,5 |
| **22** | 42,1 | 36,0 | 34,5 |
| **24** | 45,2 | 39,2 | 34,5 |

Dimensions shown in mm | Specifications and dimensions subject to change
This document solely applies to European manufactured KPT / KPSE / KPTC products

## **STRAIGHT PLUGS** KPT06F / KPSE06F (VG95328K) / KPTC6F

Description: Straight plug with endbell, cable clamp and grommet seal.

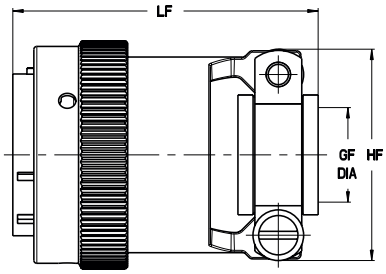


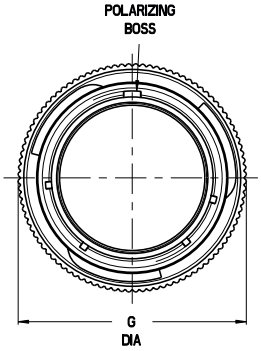


| Shell size | Ø G max. | Ø $G_F$ min. | $H_F$ max. | $L_F$ max. |
|---|---|---|---|---|
| **8** | 19,8 | 2,9 | 19,3 | 56,0 |
| **10** | 23,6 | 4,5 | 20,8 | 56,0 |
| **12** | 26,5 | 7,7 | 24,4 | 56,0 |
| **14** | 30,1 | 9,3 | 27,2 | 56,0 |
| **16** | 33,2 | 12,4 | 28,7 | 59,0 |
| **18** | 35,4 | 15,6 | 35,3 | 59,0 |
| **20** | 39,0 | 15,6 | 35,3 | 59,0 |
| **22** | 42,1 | 18,8 | 39,9 | 59,0 |
| **24** | 45,2 | 20,1 | 43,2 | 59,0 |

## **STRAIGHT PLUGS** KPT6E...DN / KPSE6E...DN(VG95328J) / KPTC6E...DN

Description: Straight plug with endbell for heat shrink boot and grommet seal.

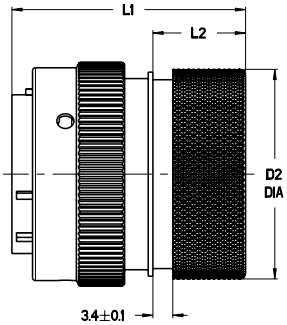


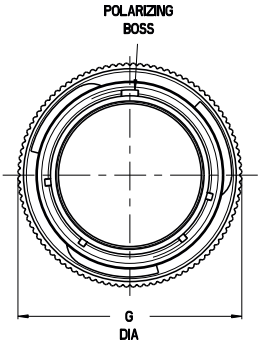


| Shell size | Ø G max. | Ø D2 –0,5 | L1 max. | L2 ±0,5 |
|---|---|---|---|---|
| **8** | 19,8 | 15,6 | 35,0 | 12,2 |
| **10** | 23,6 | 18,4 | 35,0 | 12,2 |
| **12** | 26,5 | 23,7 | 35,0 | 12,2 |
| **14** | 30,1 | 24,5 | 35,0 | 12,2 |
| **16** | 33,2 | 29,8 | 37,0 | 14,5 |
| **18** | 35,4 | 32,0 | 37,0 | 14,5 |
| **20** | 39,0 | 36,1 | 42,0 | 15,8 |
| **22** | 42,1 | 38,5 | 42,0 | 15,8 |
| **24** | 45,2 | 41,6 | 42,0 | 14,9 |

## **STRAIGHT PLUGS** KPT6E…DZ / KPSE6E…DZ (VG95328M) / KPTC6E…DZ

Description: Straight plug with endbell for heat shrink boot and grommet seal, shielded.

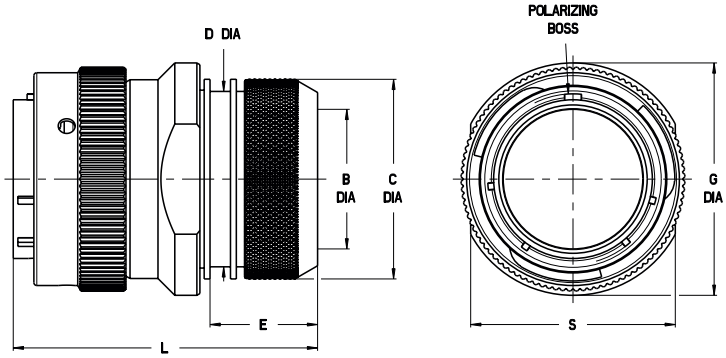


| Shell size | Ø B min. | Ø C +0,5 | Ø G max. | Ø D max. | E 1,0 | L max. | S +0,2 |
|---|---|---|---|---|---|---|---|
| **8** | 6,6 | 16,0 | 19,1 | 13,3 | 15,0 | 48,0 | 17,00 |
| **10** | 9,2 | 18,0 | 22,0 | 16,1 | 15,0 | 48,0 | 19,00 |
| **12** | 12,2 | 22,0 | 26,2 | 20,0 | 17,0 | 48,0 | 23,00 |
| **14** | 15,2 | 25,0 | 29,4 | 22,2 | 18,0 | 49,0 | 26,00 |
| **16** | 18,3 | 28,0 | 32,8 | 26,2 | 18,0 | 49,0 | 29,00 |
| **18** | 20,0 | 32,0 | 35,4 | 28,5 | 18,0 | 49,0 | 33,00 |
| **20** | 23,0 | 34,0 | 39,0 | 32,5 | 18,0 | 53,0 | 35,00 |
| **22** | 26,0 | 38,0 | 42,1 | 34,8 | 18,0 | 53,0 | 39,00 |
| **24** | 28,8 | 41,0 | 45,2 | 37,9 | 18,0 | 53,0 | 42,00 |

## **STRAIGHT PLUGS** KPSE6 / KPT6 / KPTC6 … DT

Description: Straight Plug with banding adapter for heat shrink boot and grommet seal, shielded.

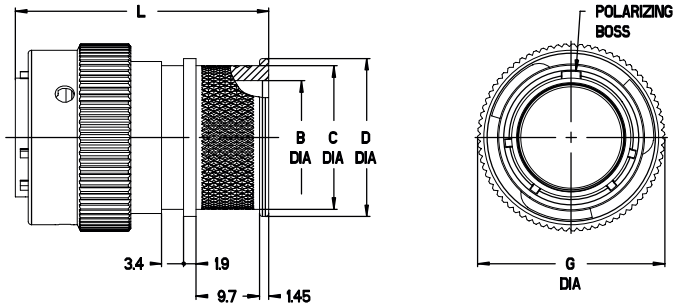


| Shell size | Ø A +0,03 – 0,13 | Ø B ±0.2 | Ø C ±0.2 | Ø D ±0.2 | K ±0.1 | L max. | M ±0.15 | S max. | Ø T ±0,15 |
|---|---|---|---|---|---|---|---|---|---|
| **8** | 12.0 | 8.2 | 13.1 | 15.35 | 1.9 | 39.3 | 11.6 | 20.6 | 23.8 |
| **10** | 15.0 | 11.4 | 15.9 | 18.15 | 1.9 | 39.3 | 11.6 | 23.8 | 26.9 |
| **12** | 19.05 | 14.5 | 21.2 | 23.45 | 1.9 | 40.1 | 11.6 | 26.15 | 29.3 |
| **14** | 22.23 | 17.4 | 22.0 | 24.25 | 1.9 | 40.1 | 11.6 | 28.5 | 31.7 |
| **16** | 25.40 | 20.7 | 26.0 | 29.55 | 1.9 | 40.1 | 11.6 | 30.7 | 34.1 |
| **18** | 28.58 | 23.2 | 28.2 | 31.75 | 1.9 | 40.1 | 11.6 | 33.3 | 36.5 |
| **20** | 31.75 | 26.4 | 32.3 | 35.85 | 2.2 | 43.4 | 14.25 | 36.91 | 39.6 |
| **22** | 34.93 | 29.5 | 34.6 | 38.25 | 2.2 | 43.4 | 14.25 | 40.08 | 42.8 |
| **24** | 38.10 | 32.7 | 37.7 | 41.35 | 2.2 | 45.3 | 14.25 | 42.8 | 46.0 |

For corresponding tooling and banding, please contact the factory for assembly instructions CAS25098
Banding adapters should be used for individual wires only. For use with jacketed cables consult factory.

Dimensions shown in mm | Specifications and dimensions subject to change
This document solely applies to European manufactured KPT / KPSE / KPTC products

## **STRAIGHT PLUG** KPT6PG/KPTC6PG

Description: Straight plug with adapter for PG gland nut. Gland nut is not included.

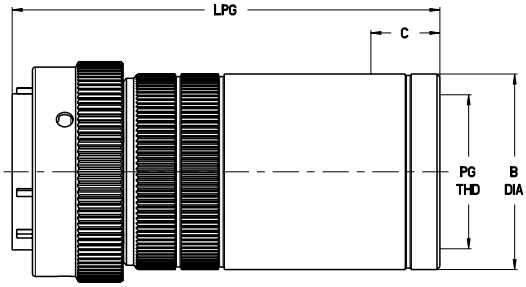


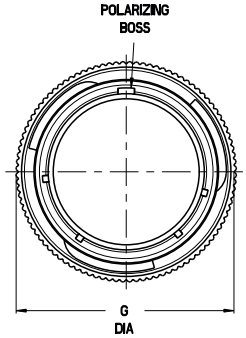


| Shell size | Ø G max. | Ø B max. | C min. | $L_{PG}$ max. | $PG_{THD}$ |
|---|---|---|---|---|---|
| **10** | 23,6 | 19,0 | 10,5 | 58,5 | PG 09 |
| **12** | 26,5 | 22,5 | 10,5 | 58,5 | PG 11 |
| **14** | 30,1 | 25,0 | 10,5 | 58,5 | PG 13,5 |
| **16** | 33,2 | 28,0 | 10,5 | 73,0 | PG 16 |
| **18** | 35,4 | 32,5 | 11,5 | 73,0 | PG 21 |
| **20** | 39,0 | 34,5 | 11,5 | 76,0 | PG 21 |
| **22** | 42,1 | 38,0 | 11,5 | 82,0 | PG 21 |
| **24** | 45,2 | 40,5 | 11,5 | 82,0 | PG 29 |

## **STRAIGHT PLUG** KPT6ME/KPTC6ME

Description: Straight plug with adapter for ME gland nut. Gland nut is not included.

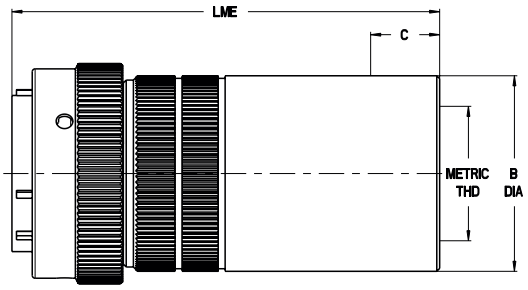


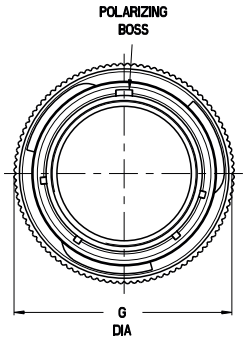


| Shell size | Ø G max. | Ø B max. | C min. | $L_{ME}$ max. | Metric Thread |
|---|---|---|---|---|---|
| **10** | 23,6 | 19,0 | 10,5 | 58,5 | M 12 x 1,5 |
| **12** | 26,5 | 22,5 | 10,5 | 58,5 | M 16 x 1,5 |
| **14** | 30,1 | 25,0 | 10,5 | 58,5 | M 20 x 1,5 |
| **16** | 33,2 | 28,0 | 10,5 | 73,0 | M20 x 1,5 |
| **18** | 35,4 | 32,5 | 11,5 | 73,0 | M 25 x 1,5 |
| **20** | 39,0 | 34,5 | 11,5 | 76,0 | M 25 x 1,5 |
| **22** | 42,1 | 38,0 | 11,5 | 82,0 | M 32 x 1,5 |
| **24** | 45,2 | 40,5 | 11,5 | 82,0 | M 32 x 1,5 |

## **JAM NUT RECEPTACLES** KPT07A / KPTC7A

Description: Jam nut receptacle without endbell.

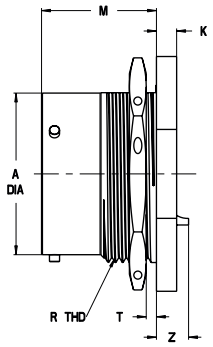


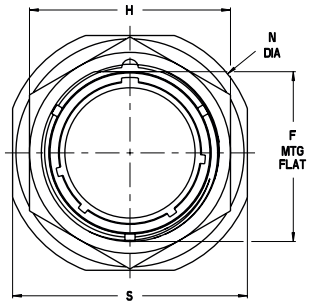


| Shell size | Ø A +0,03 – 0,13 | F ±0,15 | H ±0,15 | K ±0,25 | M ±0,15 | RTHD Thread Type 2A | S max. | T Panel Thickness | | Ø N ±0.4 | Z max. |
|---|---|---|---|---|---|---|---|---|---|---|---|
| | | | | | | | | min. | max. | | |
| **8** | 12,00 | 13,3 | 19,0 | 3,2 | 17,7 | 9/16-24UNEF | 24,3 | 1,6 | 3,5 | 26,9 | 7,9 |
| **10** | 15,00 | 16,5 | 22,2 | 3,2 | 17,7 | 11/16-24UNEF | 27,4 | 1,6 | 3,5 | 30,1 | 7,9 |
| **12** | 19,05 | 20,6 | 27,0 | 3,2 | 17,7 | 7/8-20UNEF | 32,2 | 1,6 | 3,5 | 34,9 | 7,9 |
| **14** | 22,23 | 23,8 | 30,2 | 3,2 | 17,7 | 1-20UNEF | 35,4 | 1,6 | 3,5 | 38,1 | 7,9 |
| **16** | 25,40 | 26,9 | 33,3 | 3,2 | 17,7 | 1-1/8-18UNEF | 38,6 | 1,6 | 3,5 | 41,2 | 7,9 |
| **18** | 28,58 | 30,1 | 36,5 | 3,2 | 17,7 | 1-1/4-18UNEF | 41,7 | 1,6 | 3,5 | 44,4 | 7,9 |
| **20** | 31,75 | 33,3 | 39,7 | 4,0 | 22,5 | 1-3/8-18UNEF | 46,5 | 1,6 | 6,5 | 49,2 | 4,7 |
| **22** | 34,93 | 36,5 | 42,9 | 4,0 | 22,5 | 1-1/2-18UNEF | 49,7 | 1,6 | 6,5 | 52,3 | 4,7 |
| **24** | 38,10 | 39,6 | 46,0 | 4,0 | 23,3 | 1-5/8-18UNEF | 52,8 | 1,6 | 6,5 | 55,5 | 3,8 |

## **JAM NUT RECEPTACLES** KPT07E / KPSE07E (VG95328D) / KPTC7E

Description: Jam nut receptacle with pressure nut and grommet seal.

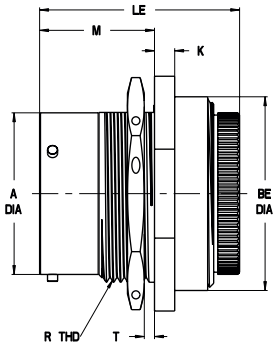


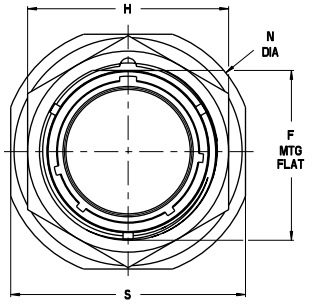


| Shell size | Ø A +0,03 – 0,13 | F ±0,15 | H ±0,15 | K ±0,25 | M ±0,15 | RTHD Thread Type 2A | S max. | T Panel Thickness | | Ø N ±0.4 | Ø BE max. | LE max. |
|---|---|---|---|---|---|---|---|---|---|---|---|---|
| | | | | | | | | min. | max. | | | |
| **8** | 12,00 | 13,3 | 19,0 | 3,2 | 17,7 | 9/16-24UNEF | 24,3 | 1,6 | 3,5 | 26,9 | 18,2 | 33,5 |
| **10** | 15,00 | 16,5 | 22,2 | 3,2 | 17,7 | 11/16-24UNEF | 27,4 | 1,6 | 3,5 | 30,1 | 21,5 | 33,5 |
| **12** | 19,05 | 20,6 | 27,0 | 3,2 | 17,7 | 7/8-20UNEF | 32,2 | 1,6 | 3,5 | 34,9 | 24,6 | 33,5 |
| **14** | 22,23 | 23,8 | 30,2 | 3,2 | 17,7 | 1-20UNEF | 35,4 | 1,6 | 3,5 | 38,1 | 27,8 | 33,5 |
| **16** | 25,40 | 26,9 | 33,3 | 3,2 | 17,7 | 1-1/8-18UNEF | 38,6 | 1,6 | 3,5 | 41,2 | 31,0 | 33,5 |
| **18** | 28,58 | 30,1 | 36,5 | 3,2 | 17,7 | 1-1/4-18UNEF | 41,7 | 1,6 | 3,5 | 44,4 | 34,1 | 33,5 |
| **20** | 31,75 | 33,3 | 39,7 | 4,0 | 22,5 | 1-3/8-18UNEF | 46,5 | 1,6 | 6,5 | 49,2 | 38,1 | 39,0 |
| **22** | 34,93 | 36,5 | 42,9 | 4,0 | 22,5 | 1-1/2-18UNEF | 49,7 | 1,6 | 6,5 | 52,3 | 41,3 | 39,0 |
| **24** | 38,10 | 39,6 | 46,0 | 4,0 | 23,3 | 1-5/8-18UNEF | 52,8 | 1,6 | 6,5 | 55,5 | 44,5 | 39,0 |

Dimensions shown in mm | Specifications and dimensions subject to change
This document solely applies to European manufactured KPT / KPSE / KPTC products

## **JAM NUT RECEPTACLES** KPT07F / KPSE07F (VG95328E) / KPTC7F

Description: Jam nut receptacle with endbell, cable clamp and grommet seal.

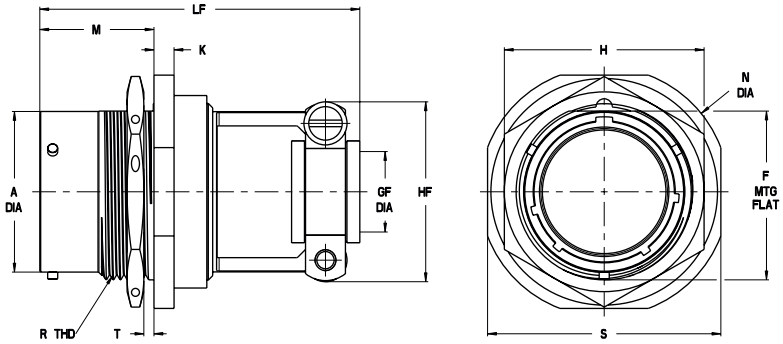


| Shell size | Ø A +0,03 – 0,13 | F ±0,15 | H ±0,15 | K ±0,25 | M ±0,15 | $R_{THD}$ Thread Type 2A | S max. | T Panel Thickness | | Ø N ±0.4 | $L_F$ max. | Ø $G_F$ max. | $H_F$ max. |
|---|---|---|---|---|---|---|---|---|---|---|---|---|---|
| | | | | | | | | min. | max. | | | | |
| **8** | 12,00 | 13,3 | 19,0 | 3,2 | 17,7 | 9/16-24UNEF | 24,3 | 1,6 | 3,5 | 26,9 | 44,9 | 2,9 | 19,3 |
| **10** | 15,00 | 16,5 | 22,2 | 3,2 | 17,7 | 11/16-24UNEF | 27,4 | 1,6 | 3,5 | 30,1 | 44,9 | 4,5 | 20,8 |
| **12** | 19,05 | 20,6 | 27,0 | 3,2 | 17,7 | 7/8-20UNEF | 32,2 | 1,6 | 3,5 | 34,9 | 44,9 | 7,7 | 24,4 |
| **14** | 22,23 | 23,8 | 30,2 | 3,2 | 17,7 | 1-20UNEF | 35,4 | 1,6 | 3,5 | 38,1 | 44,9 | 9,3 | 27,2 |
| **16** | 25,40 | 26,9 | 33,3 | 3,2 | 17,7 | 1-1/8-18UNEF | 38,6 | 1,6 | 3,5 | 41,2 | 48,4 | 12,4 | 28,7 |
| **18** | 28,58 | 30,1 | 36,5 | 3,2 | 17,7 | 1-1/4-18UNEF | 41,7 | 1,6 | 3,5 | 44,4 | 48,4 | 15,6 | 35,3 |
| **20** | 31,75 | 33,3 | 39,7 | 4,0 | 22,5 | 1-3/8-18UNEF | 46,5 | 1,6 | 6,5 | 49,2 | 50,3 | 15,6 | 35,3 |
| **22** | 34,93 | 36,5 | 42,9 | 4,0 | 22,5 | 1-1/2-18UNEF | 49,7 | 1,6 | 6,5 | 52,3 | 50,3 | 18,8 | 39,9 |
| **24** | 38,10 | 39,6 | 46,0 | 4,0 | 23,3 | 1-5/8-18UNEF | 52,8 | 1,6 | 6,5 | 55,5 | 50,3 | 20,1 | 43,2 |

## **JAM NUT RECEPTACLES** KPT7E...DN / KPSE7E...DN (VG95328S) / KPTC7E…DN

Description: Jam nut receptacle with endbell for heat shrink boot and grommet seal.

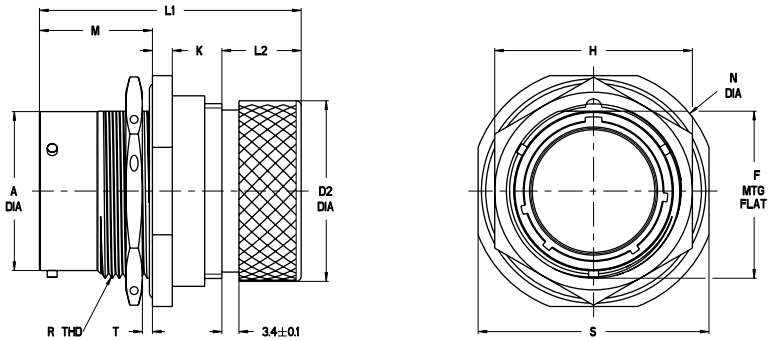


| Shell size | Ø A +0,03 – 0,13 | F ±0,15 | H ±0,15 | K ±0,25 | M ±0,15 | $R_{THD}$ Thread Type 2A | S max. | T Panel Thickness | | Ø N ±0.4 | $L_1$ max. | $L_2$ ±0,15 | Ø $D_2$ max. |
|---|---|---|---|---|---|---|---|---|---|---|---|---|---|
| | | | | | | | | min. | max. | | | | |
| **8** | 12,00 | 13,3 | 19,0 | 3,2 | 17,7 | 9/16-24UNEF | 24,3 | 1,6 | 3,5 | 26,9 | 43,0 | 12,2 | 15,6 |
| **10** | 15,00 | 16,5 | 22,2 | 3,2 | 17,7 | 11/16-24UNEF | 27,4 | 1,6 | 3,5 | 30,1 | 43,0 | 12,2 | 18,4 |
| **12** | 19,05 | 20,6 | 27,0 | 3,2 | 17,7 | 7/8-20UNEF | 32,2 | 1,6 | 3,5 | 34,9 | 43,0 | 12,2 | 23,7 |
| **14** | 22,23 | 23,8 | 30,2 | 3,2 | 17,7 | 1-20UNEF | 35,4 | 1,6 | 3,5 | 38,1 | 43,0 | 12,2 | 24,5 |
| **16** | 25,40 | 26,9 | 33,3 | 3,2 | 17,7 | 1-1/8-18UNEF | 38,6 | 1,6 | 3,5 | 41,2 | 45,5 | 14,5 | 29,8 |
| **18** | 28,58 | 30,1 | 36,5 | 3,2 | 17,7 | 1-1/4-18UNEF | 41,7 | 1,6 | 3,5 | 44,4 | 45,5 | 14,5 | 32,0 |
| **20** | 31,75 | 33,3 | 39,7 | 4,0 | 22,5 | 1-3/8-18UNEF | 46,5 | 1,6 | 6,5 | 49,2 | 52,6 | 15,8 | 36,1 |
| **22** | 34,93 | 36,5 | 42,9 | 4,0 | 22,5 | 1-1/2-18UNEF | 49,7 | 1,6 | 6,5 | 52,3 | 52,6 | 15,8 | 38,5 |
| **24** | 38,10 | 39,6 | 46,0 | 4,0 | 23,3 | 1-5/8-18UNEF | 52,8 | 1,6 | 6,5 | 55,5 | 51,6 | 14,9 | 41,6 |

## **JAM NUT RECEPTACLES** KPT7E...DZ / KPSE7E...DZ / KPTC7E...DZ

Description: Jam nut receptacle with endbell for heat shrink boot and grommet seal, shielded.

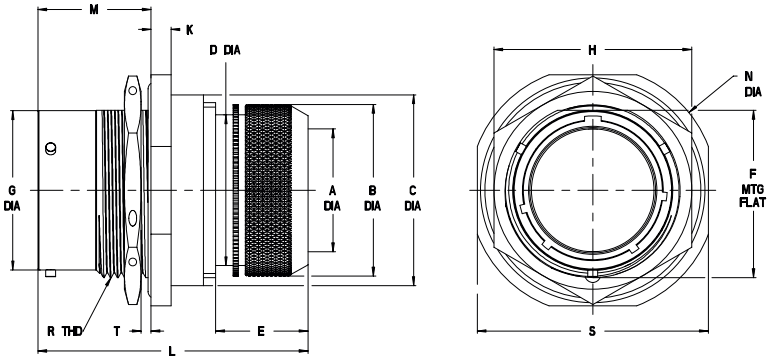


| Shell size | Ø A min. | Ø B +0,5 | Ø C max. | Ø D max. | E ±1,0 | F ±0,15 | ØG -0.1 | H ±0,15 | K ±0,25 | M ±0,15 | RTHD THREAD TYPE 2A | S max. | T Panel Thickness min. | T Panel Thickness max. | ØN ±0.4 | L max. |
|---|---|---|---|---|---|---|---|---|---|---|---|---|---|---|---|---|
| **8** | 6,6 | 16 | 18,2 | 13,3 | 15 | 13,3 | 12 | 19 | 3,2 | 17,7 | 9/16-24UNEF | 24,3 | 1,6 | 3,5 | 26,9 | 47 |
| **10** | 9,2 | 18 | 21,4 | 16,1 | 15 | 16,5 | 15 | 22,2 | 3,2 | 17,7 | 11/16-24UNEF | 27,4 | 1,6 | 3,5 | 30,1 | 47 |
| **12** | 12,2 | 22 | 24,6 | 20 | 17 | 20,6 | 19,05 | 27 | 3,2 | 17,7 | 7/8-20UNEF | 32,2 | 1,6 | 3,5 | 34,9 | 49 |
| **14** | 15,2 | 25 | 27,8 | 22,2 | 18 | 23,8 | 22,23 | 30,2 | 3,2 | 17,7 | 1-20UNEF | 35,4 | 1,6 | 3,5 | 38,1 | 50 |
| **16** | 18,3 | 28 | 30,9 | 26,2 | 18 | 26,9 | 25,4 | 33,3 | 3,2 | 17,7 | 1-1/8-18UNEF | 38,6 | 1,6 | 3,5 | 41,2 | 50 |
| **18** | 20 | 32 | 34,1 | 28,5 | 18 | 30,1 | 28,58 | 36,5 | 3,2 | 17,7 | 1-1/4-18UNEF | 41,7 | 1,6 | 3,5 | 44,4 | 50 |
| **20** | 23 | 34 | 38,1 | 32,5 | 18 | 33,3 | 31,75 | 39,7 | 4 | 22,5 | 1-3/8-18UNEF | 46,5 | 1,6 | 6,5 | 49,2 | 55 |
| **22** | 26 | 38 | 41,3 | 34,8 | 18 | 36,5 | 34,93 | 42,9 | 4 | 22,5 | 1-1/2-18UNEF | 49,7 | 1,6 | 6,5 | 52,3 | 55 |
| **24** | 28,8 | 41 | 44,4 | 37,9 | 18 | 39,5 | 38,1 | 46 | 4 | 23,3 | 1-5/8-18UNEF | 52,8 | 1,6 | 6,5 | 55,5 | 55 |

## **RIGHT ANGLE PLUG** KPT08A/KPSE08A/KPTC8A

Description: Plug with 90° endbell without cable clamp, no grommet seal.

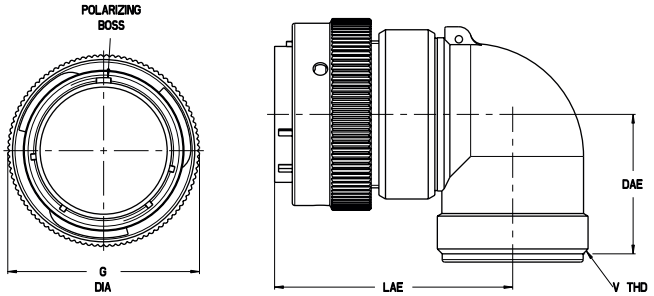


| Shell size | Ø G max. | $L_A$ max. | $D_A$ max. | $V_{THD}$ Thread Type 2A |
|---|---|---|---|---|
| **8** | 19,8 | 36,1 | 20,9 | 1/2-28UNEF |
| **10** | 23,6 | 38,3 | 21,7 | 5/8-24UNEF |
| **12** | 26,5 | 40,9 | 23,3 | 3/4-20UNEF |
| **14** | 30,1 | 41,6 | 24,9 | 7/8-20UNEF |
| **16** | 33,2 | 42,5 | 26,5 | 1-20UNEF |
| **18** | 35,4 | 44,7 | 28,1 | 1-3/16-18UNEF |
| **20** | 39,0 | 48,3 | 29,6 | 1-3/16-18UNEF |
| **22** | 42,1 | 52,1 | 31,7 | 1-7/16-18UNEF |
| **24** | 45,2 | 52,1 | 33,6 | 1-7/16-18UNEF |

Dimensions shown in mm | Specifications and dimensions subject to change
This document solely applies to European manufactured KPT / KPSE / KPTC products

## **RIGHT ANGLE PLUG** KPT08E / KPSE08E / KPTC8E

Description: Plug with 90° endbell without cable clamp, with grommet seal.

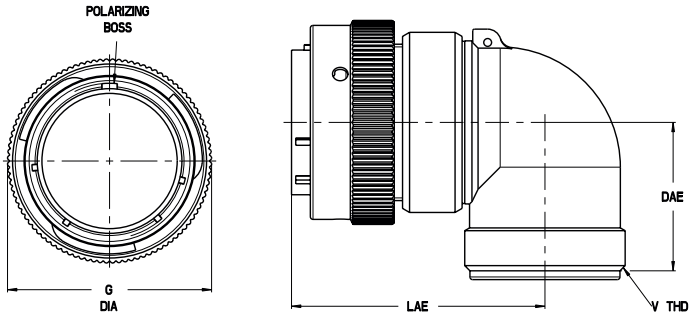


| Shell size | Ø G max. | $L_E$ max. | $D_E$ max. | $V_{THD}$ Thread Type 2A |
|---|---|---|---|---|
| **8** | 19,8 | 36,1 | 20,9 | 1/2-28UNEF |
| **10** | 23,6 | 38,3 | 21,7 | 5/8-24UNEF |
| **12** | 26,5 | 40,9 | 23,3 | 3/4-20UNEF |
| **14** | 30,1 | 41,6 | 24,9 | 7/8-20UNEF |
| **16** | 33,2 | 42,5 | 26,5 | 1-20UNEF |
| **18** | 35,4 | 44,7 | 28,1 | 1-3/16-18UNEF |
| **20** | 39,0 | 48,3 | 29,6 | 1-3/16-18UNEF |
| **22** | 42,1 | 52,1 | 31,7 | 1-7/16-18UNEF |
| **24** | 45,2 | 52,1 | 33,6 | 1-7/16-18UNEF |

## **RIGHT ANGLE PLUG** KPT08F / KPSE08F / KPTC8F

Description: Plug with 90° endbell with cable clamp and grommet seal.

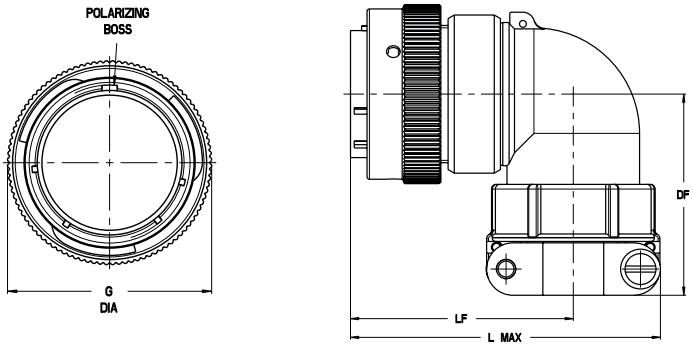


| Shell size | Ø G max. | L max. | $D_F$ max. | $L_F$ max. |
|---|---|---|---|---|
| **8** | 19,8 | 47,0 | 31,4 | 36,1 |
| **10** | 23,6 | 49,5 | 32,2 | 38,3 |
| **12** | 26,5 | 53,5 | 35,4 | 40,9 |
| **14** | 30,1 | 55,5 | 38,6 | 41,6 |
| **16** | 33,2 | 57,0 | 40,2 | 42,5 |
| **18** | 35,4 | 62,5 | 41,8 | 44,7 |
| **20** | 39,0 | 67,0 | 43,4 | 48,3 |
| **22** | 42,1 | 71,5 | 47,9 | 52,1 |
| **24** | 45,2 | 74,0 | 49,9 | 52,1 |

## **BOX MOUNTING RECEPTACLE** KPT2/KPTC2 . . . EX OR EW

Description: Box mounting receptacle with PCB solder pins:
EX – PCB solder pin 0,76 x 7mm
EW – PCB solder pin 0,6 x 7mm

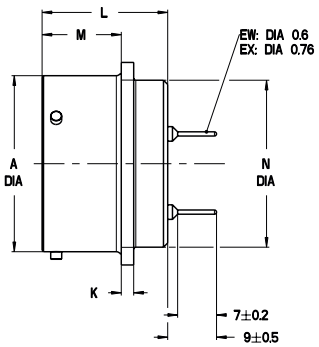


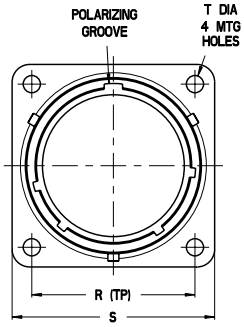


| Shell size | Ø A +0,03–0,13 | K ±0,1 | L max. | M ±0,15 | Ø N max. | R ±0,15 | S max. | Ø T ±0,15 |
|---|---|---|---|---|---|---|---|---|
| **8** | 12,00 | 1,9 | 21,1 | 11,60 | 11,1 | 15,1 | 21,0 | 3,05 |
| **10** | 15,00 | 1,9 | 21,1 | 11,60 | 14,3 | 18,3 | 24,2 | 3,05 |
| **12** | 19,05 | 1,9 | 21,1 | 11,60 | 17,5 | 20,6 | 26,6 | 3,05 |
| **14** | 22,23 | 1,9 | 21,1 | 11,60 | 20,6 | 23,0 | 29,0 | 3,05 |
| **16** | 25,40 | 1,9 | 21,1 | 11,60 | 23,8 | 24,6 | 31,3 | 3,05 |
| **18** | 28,58 | 1,9 | 21,1 | 11,60 | 27,0 | 27,0 | 33,7 | 3,05 |
| **20** | 31,75 | 2,2 | 22,7 | 14,25 | 30,2 | 29,4 | 36,9 | 3,05 |
| **22** | 34,93 | 2,2 | 22,7 | 14,25 | 33,4 | 31,7 | 40,1 | 3,05 |
| **24** | 38,10 | 2,2 | 22,7 | 15,10 | 36,5 | 34,9 | 43,3 | 3,75 |

## **JAM NUT RECEPTACLES** KPT7/KPTC7 . . . EX OR EW

Description: Jam nut receptacle with PCB solder pins:
EX – PCB solder pin 0,76 x 7mm
EW – PCB solder pin 0,6 x 7mm

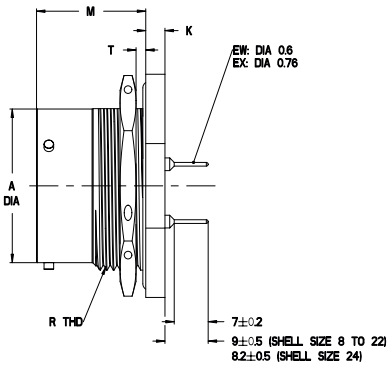


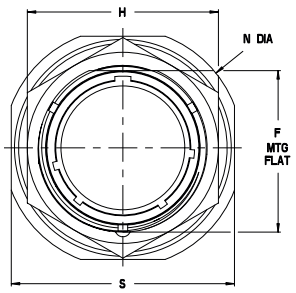


| Shell size | Ø A +0,03–0,13 | F ±0,15 | H ±0,15 | K ±0,25 | M ±0,15 | $R_{THD}$ Thread Type 2A | S max. | T (Panel Thickness) | | Ø N ±0.4 |
|---|---|---|---|---|---|---|---|---|---|---|
| | | | | | | | | min. | max. | |
| **8** | 12,0 | 13,3 | 19,0 | 3,2 | 17,7 | 9/16-24UNEF | 24,3 | 1,6 | 3,5 | 26,9 |
| **10** | 15,0 | 16,5 | 22,2 | 3,2 | 17,7 | 11/16-24UNEF | 27,4 | 1,6 | 3,5 | 30,1 |
| **12** | 19,1 | 20,6 | 27,0 | 3,2 | 17,7 | 7/8-20UNEF | 32,2 | 1,6 | 3,5 | 34,9 |
| **14** | 22,2 | 23,8 | 30,2 | 3,2 | 17,7 | 1-20UNEF | 35,4 | 1,6 | 3,5 | 38,1 |
| **16** | 25,4 | 26,9 | 33,3 | 3,2 | 17,7 | 1-1/8-18UNEF | 38,6 | 1,6 | 3,5 | 41,2 |
| **18** | 28,6 | 30,1 | 36,5 | 3,2 | 17,7 | 1-1/4-18UNEF | 41,7 | 1,6 | 3,5 | 44,4 |
| **20** | 31,8 | 33,3 | 39,7 | 4,0 | 22,5 | 1-3/8-18UNEF | 46,5 | 1,6 | 6,5 | 49,2 |
| **22** | 34,9 | 36,5 | 42,9 | 4,0 | 22,5 | 1-1/2-18UNEF | 49,7 | 1,6 | 6,5 | 52,3 |
| **24** | 38,1 | 39,6 | 46,0 | 4,0 | 23,3 | 1-5/8-18UNEF | 52,8 | 1,6 | 6,5 | 55,5 |

Dimensions shown in mm | Specifications and dimensions subject to change
This document solely applies to European manufactured KPT / KPSE / KPTC products

## HOW TO ORDER

KPT80- 10 D- A34

**Series**
KPT80 – for plug
KPT81 – for receptacle

**Shell size**
8–24

**Termination**
D – Nylon cord 400 mm
Clip and end link attached (not assembled)
Crimp tool for end link: M317 (selector position 6)
C – sash chain and terminal link
CB – Nylon cord and terminal link
N – chain with ring (KPT81 only)
NB – Nylon cord with ring (KPT81 only)

**Modification**
A34 – Nickel plated (RoHS compliant)
A232 – Zinc cobalt, black (RoHS compliant)
A240 – Zinc nickel plating (RoHS compliant)
A241 - Tin Zinc, matt grey (VG approved, RoHS compliant)
(without code) – Olive drab chromate over cadmium (VG approved)

KPTC80- 10 C- C

**Series**
KPTC80 – for plug
KPTC81 – for receptacle

**Shell size**
8–24

**Termination**
C – Nylon cord and endlink
N - Nylon cord with ring (KPTC81 only)

**Modification**
C – Nickel plated (RoHS compliant)
D – Cadmium plated (VG approved)
R – Zinc cobalt, black (RoHS compliant)
F – Zinc cobalt, green (RoHS compliant)
H – Zinc nickel plating (RoHS compliant)
G - Tin Zinc, matt grey (VG approved, RoHS compliant)

VG95328 Z2 C 10 J

**VG Specification**

**Style**
Z1 – for receptacle
Z2 – for plug
Z3 – for jam nut receptacle

**Termination**
A – chain and terminal link
B - for Z1 and Z2:
Nylon cord and terminal link
C – for Z1 and Z2:
Nylon cord 400 mm and end link
Clip and end link attached (not mounted)
Crimp tool for end link: M317 (selector position 6)
C – for Z3: Nylon cord with ring

**Shell size**
8–24

**Plating**
Without identification = Cadmium, VG approved
Identification 'J' = RoHS, Matt Grey SnZn plating, VG approved

## Cap with end link (not assembled)

**For receptacle**
KPT81 termination D
VG95328 Z1 termination C

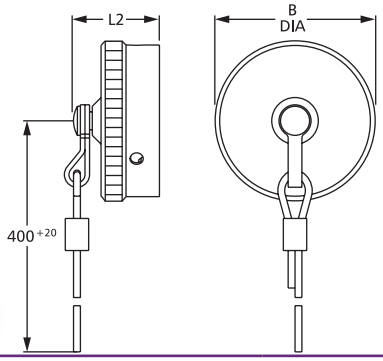


**For plug**
KPT80 termination D
VG95328 Z2 termination C

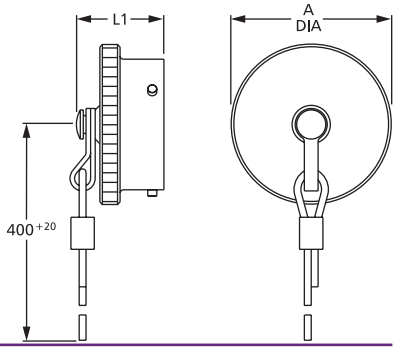


## Cap with terminal link

**For receptacle**
KPT81 termination C (with chain) and CB (with nylon cord)
VG95328 Z1 termination A (with chain)

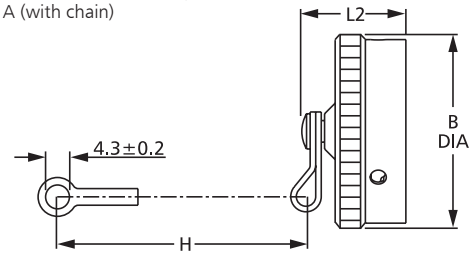


**For plug**
KPT80 termination C (with chain) and CB (with nylon cord)
VG95328 Z2 termination A (with chain)

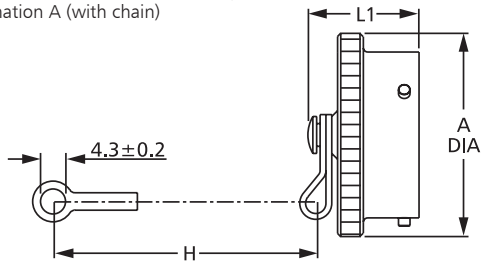


## Cap with ring

**For receptacle**
KPT81 termination N (with chain) and NB (with nylon chord)
VG95328 Z3 termination C (with nylon cord)

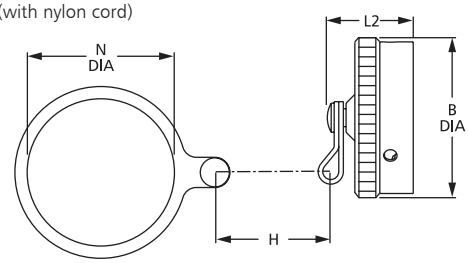


| Shell size | Ø A max. | $L_1$ max. | Ø B max. | $L_2$ max. | H max. | Ø N ±0,5 |
|---|---|---|---|---|---|---|
| **8** | 18,26 | 19,84 | 18,0 | 21,44 | 76 | 14,7 |
| **10** | 21,44 | 19,84 | 20,3 | 21,44 | 76 | 17,9 |
| **12** | 25,40 | 19,84 | 25,1 | 21,44 | 89 | 22,6 |
| **14** | 28,58 | 19,84 | 28,2 | 21,44 | 89 | 25,8 |
| **16** | 31,75 | 19,84 | 31,5 | 21,44 | 89 | 29,0 |
| **18** | 34,92 | 19,84 | 34,5 | 21,44 | 89 | 32,2 |
| **20** | 38,10 | 21,44 | 37,8 | 21,44 | 101 | 35,3 |
| **22** | 41,28 | 21,44 | 40,9 | 21,44 | 101 | 38,5 |
| **24** | 44,45 | 22,22 | 44,2 | 22,22 | 101 | 41,7 |

Dimensions shown in mm | Specifications and dimensions subject to change
This document solely applies to European manufactured KPT / KPSE / KPTC products

## HOW TO ORDER

Below the order reference for Dummy Receptacles KPT series (can be mated with KPSE or KPTC connectors) and separately for VG95328. The table contains the available shell sizes with their respective dimensions.

KPT 15- 8 A

- **Series**
- **Dummy receptacle**
- **Shell size**
- **Flange**
  A – Standard

VG95328 T07 C 8

- **Series**
- **Dummy receptacle**
- **Style (back side closed)**
- **Shell size**

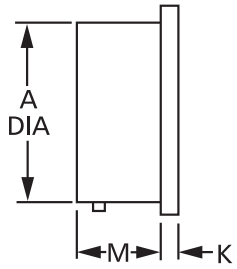


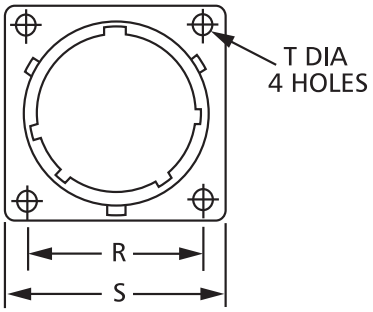


| Shell size | Ø A +0,03 – 0,13 | K ±0,4 | M ±0,15 | R ±0,15 | S max. | Ø T ±0,15 |
|---|---|---|---|---|---|---|
| **KPT-15-8A** | 12,00 | 1,6 | 12,1 | 15,1 | 21,0 | 3,05 |
| **KPT-15-10A** | 15,00 | 1,6 | 12,1 | 18,3 | 24,2 | 3,05 |
| **KPT-15-12A** | 19,05 | 1,6 | 12,1 | 20,6 | 26,6 | 3,05 |
| **KPT-15-14A** | 22,23 | 1,6 | 12,1 | 23,0 | 29,0 | 3,05 |
| **KPT-15-16A** | 25,40 | 1,6 | 12,1 | 24,6 | 31,3 | 3,05 |
| **KPT-15-18A** | 28,58 | 1,6 | 12,1 | 27,0 | 33,7 | 3,05 |
| **KPT-15-20A** | 31,75 | 2,4 | 14,5 | 29,4 | 36,9 | 3,05 |
| **KPT-15-22A** | 34,93 | 2,4 | 14,5 | 31,8 | 40,1 | 3,05 |
| **KPT-15-24A** | 38,10 | 2,4 | 15,4 | 34,9 | 43,3 | 3,75 |

## GASKETS

| Shell Size | Alu-Flex Conductive | Chloroprene non conductive | Shell Size | Alu-Flex Conductive | Chloroprene non conductive |
|---|---|---|---|---|---|
| **8** | 075-8543-000 | 075-8543-010 | **18** | 075-8543-005 | 075-8543-015 |
| **10** | 075-8543-001 | 075-8543-011 | **20** | 075-8543-006 | 075-8543-016 |
| **12** | 075-8543-002 | 075-8543-012 | **22** | 075-8543-007 | 075-8543-017 |
| **14** | 075-8543-003 | 075-8543-013 | **24** | 075-8543-008 | 075-8543-018 |
| **16** | 075-8543-004 | 075-8543-014 | | | |

## WIRE HOLE FILLERS

| Contact Size | Colour code | Cannon |
|---|---|---|
| **20** | Red | 225-1012-000 |
| **16** | Blue | 225-1011-000 |
| **12*** | Yellow | 225-0072-000 |
| **Coaxial 14a4*** | Yellow | 225-0018-000 |

*KPSE only

## **CROSS REFERENCE LIST** KPT/KPSE/VG95328/MIL-C-26482

All three product lines have specific characteristics and provide a set of unique variants, however, all lines are fully intermateable with each other as well as any other connector series designed according to MIL-DTL 26482 Series I or VG95328 standards.

| Solder | | |
|---|---|---|
| **ITT Cannon** | **MIL-DTL-26482-Style** | **VG95328** |
| **KPT00E** | MS3110E | |
| **KPT00F** | MS3110F | |
| **KPT0E-DN** | | |
| **KPT0E-DZ** | | |
| **KPT01A** | | |
| **KPT01E** | MS3111E | |
| **KPT01F** | MS3111F | |
| **KPT1E-DN** | | |
| **KPT1E-DZ** | | |
| **KPT02E** | MS3112E | VG95328H |
| **KPT06A** | | |
| **KPT06E** | MS3116E | |
| **KPT06F** | MS3116F | |
| **KPT6E-DN** | | |
| **KPT6E-DZ** | | |
| **KPT07A** | | |
| **KPT07E** | MS3114E | |
| **KPT07F** | MS3114F | |
| **KPT7E-DN** | | |
| **KPT7E-DZ** | | |
| **KPT08E** | | |
| **KPT08F** | | |
| **KPTB** | MS3119 | VG95328P |

| Crimp | | |
|---|---|---|
| **ITT Cannon** | **MIL-DTL-26482-Style** | **VG95328** |
| **KPSE00E** | MS3120E | VG95328A |
| **KPSE00F** | MS3120F | VG95328B |
| **KPSE0E-DN** | | |
| **KPSE0E-DZ** | | VG95328R |
| **KPSE01A** | | |
| **KPSE01E** | MS3121E | |
| **KPSE01F** | MS3121F | |
| **KPSE1E-DN** | | |
| **KPSE1E-DZ** | | |
| **KPSE02E** | MS3122E | VG95328C |
| **KPSE06A** | | |
| **KPSE06E** | MS3126E | |
| **KPSE06F** | MS3126F | VG95328K |
| **KPSE6E-DN** | | VG95328J |
| **KPSE6E-DZ** | | VG95328M |
| **KPSE07A** | | |
| **KPSE07E** | MS3124E | VG95328D |
| **KPSE07F** | MS3124F | VG95328E |
| **KPSE7E-DN** | | VG95328S |
| **KPSE7E-DZ** | | |
| **KPSE08E** | | |
| **KPSE08F** | | |

## **CROSS REFERENCE LIST PROTECTIVE CAPS** KPT/ VG95328/MIL-C-26482

This table shows which commercial protective caps are available per VG95328. Additionally, it can be used when cross-referencing a MS protective cap for a KPT (ITT Cannon) substitute.

| Part No. ITT Cannon | Part No. MIL-DTL-26482-Style | Part No. VG95328 |
|---|---|---|
| **KPT80..C** | MS3180..C | VG95328Z2A.. |
| **KPT80..CB** | | VG95328Z2B.. |
| **KPT80..D** | | VG95328Z2C.. |
| **KPT81..C** | MS3181..C | VG95328Z1A.. |
| **KPT81..CB** | | VG95328Z1B.. |
| **KPT81..D** | | VG95328Z1C.. |
| **KPT81..N** | MS3181..N | |
| **KPT81..NB** | | VG95328Z3C.. |

Dimensions shown in mm | Specifications and dimensions subject to change
This document solely applies to European manufactured KPT / KPSE / KPTC products

## Hand crimping tool M22520/1-01 and Locator: Order No.: 995-0001-585

This universal tool features just one crimp locator with different adjustments for crimping contacts. The tool provides an 8-indent crimp.

Note: The locator needs to be purchased separately:

| Descripton Locator | Name | Order-No. | Contact Size |
|---|---|---|---|
| **M22520/1-02** | Locator | 995-0001-736 | 12 |
| | | | 16 |
| | | | 20 |
| **M22520/1-01** | Hand Crimp Tool | 995-0001-585 | |

## Pneumatic crimping tool WA27F-CE:

Pneumatic operated crimp tool for higher volume production. A pedal for foot operation can also be provided.

The tool provides an 8-indent crimp equivalent to hand crimping tool.

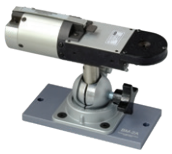

Crimp tool and Bench mount

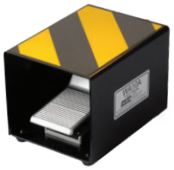

Foot pedal

Gauge

| Description | Name | Order No. |
|---|---|---|
| **Pneumatic crimp tool (AWG12-20)** | WA27F-CE | 121586-5067 |
| **Bench mount** | BM-2A | 121586-5068 |
| **Foot pedal** | WA10A | 121586-5069 |
| **Gauge** | M22520-3-1 | 995-0001-684 |

For insertion and extraction of the contacts, please contact the factory for assembly instructions CAS25098

## Insertion Tools

To insert crimped contacts into the insulator insertion tools are required.

### KPSE

Insertion Tool

| Description | Name | Order No. |
|---|---|---|
| **insertion tool for contact size # 20** | MS24256-A20 | 995-0001-950 |
| **insertion tool for contact size # 16** | MS24256-A16 | 995-0001-951 |
| **insertion tool for contact size # 12** | MS24256-A12 | 995-0001-913 |

### KPTC

Insertion Tool

CIT-F80-16

| Description | Name | Order No. |
|---|---|---|
| **insertion tool for contact size # 20** | CITG-20A | 121086-3104 |
| **insertion tool for contact size # 16** | CIT-16 | 121086-3008 |
| **insertion pliers for contact size # 16** | CIT-F80-16 | 121086-0097 |
| **insertion TIP for insertion tool # 20** | CITG-20A-TIP | 121086-3105 |
| **insertion TIP for insertion tool # 16** | CIT-16-TIP | 317-1153-000 |

## Extraction Tools

In case a contact has to be exchanged the following extraction tools are to be used:

### KPSE

Extraction tool

Extraction tool for coax contacts

| Description | Name | Order No. | Replacement-TIP |
|---|---|---|---|
| **extraction tool for contact size # 20** | MS24256-R20 | 995-0001-965 | 317-7130-000 |
| **extraction tool for contact size # 16** | MS24256-R16 | 995-0001-964 | 317-7129-000 |
| **extraction tool for contact size # 12** | MS24256-R12 | 995-0001-966 | 317-7131-000 |
| **extraction tool for coax contacts (KPT14A4)** | CET-C6B | 070064-0000 | 121586-0046 |

### KPTC

Extraction tool

| Description | Name | Order No. | Replacement-TIP |
|---|---|---|---|
| **extraction tool for contact size # 20** | CET-KPTC-20 | 121086-3212 | 317-8668-000 |
| **extraction tool for contact size # 16** | CET-KPTC-16 | 121086-3277 | 317-8649-025 |

## Pipe Wrench

Soft Jaw Adjustable Pliers for tightening the endbell housing.
Order No.: 550014-1644

## Dimensions for Single Conductor and Wire Stripping

In order to assure proper function according to connector specification, especially concerning water tightness, the diameter of the wire insulation must correlate with the following data:

### KPSE

| Contact Size | Conductor dimensions | | Insulation dimensions Waterproof / Ø mm | |
|---|---|---|---|---|
| | AWG | mm² | min. | max. |
| **20** | 24 - 18 | 0,2 – 0,75 | 1.3 | 2.1 |
| **16** | 20 - 14 | 0,5 – 2,0 | 1.8 | 2.7 |
| **12** | 14 - 12 | - | 2.5 | 3.4 |

### KPTC

| Contact Size | Conductor dimensions | | Insulation dimensions Waterproof / Ø mm | |
|---|---|---|---|---|
| | AWG | mm² | min. | max. |
| **20** | 24 - 18 | 0,2 – 0,75 | 1.4 | 2.15 |
| **16** | 20 - 14 | 0,5 – 2,0 | 1.6 | 2.7 |

## Contacts

### KPTC

| Contact size | Termination | | Contact type | | For shell size 8 and contact layout 12 – 14 only | |
|---|---|---|---|---|---|---|
| | AWG | mm² | | Contact order reference | Contact order reference | |
| **20** | 28 - 24 | 0,08 – 0,20 | Pin | 430-8588-029 | Gold plating | Silver plating |
| **20** | 24 – 18 | 0,20 – 0,75 | Socket | 031-8704-508 | 031-8704-509 | 031-8704-506 |
| | | | Pin | 430-8560-404 | 430-8560-411 | 430-8560-410 |
| **20** | - | 0,5 – 1,0 | Socket | 430-8588-031 | - | - |
| | | | Pin | 430-8588-030 | - | - |
| **16** | 20– 14 | 0,5 – 2,0 | Socket | 031-8704-502 | - | - |
| | | | Pin | 430-8560-406 | - | - |

### KPSE / VG95328

| Contact size | Termination | | Contact type | Contact order reference | |
|---|---|---|---|---|---|
| | AWG | mm² | | KPSE version | VG95328 version |
| **20** | 24 - 18 | 0,2 - 0,75 | Socket with insulation support | 031-8704-203 | 031-8704-203 |
| | | | Pin with insulation support | 430-8560-006 | 430-8560-006 |
| **16** | 20 - 14 | 0,5 - 2,0 | Socket | 031-8704-000 | 031-8704-000 |
| | | | Pin | 430-8560-004 | 430-8560-004 |
| **12** | 14 - 12 | 2,0 | Socket | 031-8704-012 | - |
| | | | Pin | 430-8560-016 | - |
| | | | Grounding Pin | 430-8560-020 | - |

### KPT14A4

| Contact size | Termination | Contact type | Contact order reference |
|---|---|---|---|
| | Cable type | | |
| **Coaxial** | RG187/U, RG188/U | Receptacle | DM 53742-5001 |
| | | Plug | DM 53740-5001 |

### 1. MATERIAL CONTENT AND PHYSICAL FORM

Electrical connectors do not usually contain hazardous materials. They contain conducting and non-conducting materials and can be divided into two groups.

a) Printed circuit types and low cost audio types which employ all plastic insulators and casings.

b) Rugged, Fire Barrier and High Reliability types with metal casings and either natural rubber, synthetic rubber, plastic or glass insulating materials. Contact materials vary with type of connector and also application and are usually manufactured from either: Copper, copper alloys, nickel, alumel, chromel or steel. In special applications, other alloys may be specified.

**⚠ CAUTION**

### 2. FIRE CHARACTERISTICS AND ELECTRIC SHOCK HAZARD

There is no fire hazard when the connector is correctly wired and used within the specified parameters.

Incorrect wiring or assembly of the connector or careless use of metal tools or conductive fluids, or transit damage to any of the component parts may cause electric shock or burns. Live circuits must not be broken by separating mated connectors as this may cause arcing, ionization and burning. Heat dissipation is greater at maximum resistance in a circuit. Hot spots may occur when resistance is raised locally by damage, e.g. cracked or deformed contacts, broken strands of wire. Local overheating may also result from the use of the incorrect application tools or from poor quality soldering or slack screw terminals.

Overheating may occur if the ratings in the product Data Sheet/ Catalog are exceeded and can cause breakdown of insulation and hence electric shock. If heating is allowed to continue it intensifies by further increasing the local resistance through loss of temper of spring contacts, formation of oxide film on contacts and wires and leakage currents through carbonization of insulation and tracking paths. Fire can then result in the presence of combustible materials and this may release noxious fumes. Overheating may not be visually apparent. Burns may result from touching overheated components.

### 3. HANDLING

Care must be taken to avoid damage to any component parts of electrical connectors during installation and use. Although there are normally no sharp edges, care must be taken when handling certain components to avoid injury to fingers.

Electrical connectors may be damaged in transit to the customers, and damage may result in creation of hazards. Products should therefore be examined prior to installation/use and rejected if found to be damaged.

### 4. DISPOSAL

Incineration of certain materials may release noxious or even toxic fumes.

### 5. APPLICATION

Connectors with exposed contacts should not be selected for use on the current supply side of an electrical circuit, because an electric shock could result from touching exposed contacts on an unmated connector. Voltages in excess of 30 V ac or 42.5 V DC are potentially hazardous and care should be taken to ensure that such voltages cannot be transmitted in any way to exposed metal parts of the connector body. The connector and wiring should be checked, before making live, to have no damage to metal parts or insulators, no solder blobs, loose strands, conducting lubricants, swarf, or any other undesired conducting particles. Circuit resistance and continuity check should be made to make certain that there are no high resistance joints or spurious conducting paths. Always use the correct application tools as specified in the Data Sheet/Catalog. Do not permit untrained personnel to wire, assemble or tamper with connectors. For operation voltage please see appropriate national regulations.

### IMPORTANT GENERAL INFORMATION

**(i) Air and creepage paths/Operating voltage.** The admissible operating voltages depend on the individual applications and the valid national and other applicable safety regulations. For this reason the air and creepage path data are only reference values. Observe reduction of air and creepage paths due to PC board and/ or harnessing.

**(ii) Temperature**

All information given are temperature limits. The operation temperature depends on the individual application.

**(iii) Other important information**

Cannon continuously endeavors to improve their products. Therefore, Cannon products may deviate from the description, technical data and shape as shown in this catalog and data sheets.

ITT Cannon manufactures the highest quality products available in the marketplace; however these products are intended to be used in accordance with the specifications in this publication. Any use or application that deviates from the stated operating specifications is not recommended and may be unsafe. No information and data contained in this publication shall be construed to create any liability on the part of Cannon. Any new issue of this publication shall automatically invalidate and supersede any and all previous issues.

cannon

# Amazing things happen when great things connect

# Notes

**Connect with your ITT Cannon representative today or visit us at ittcannon.com**

# Connect with the experts

ITT's Cannon brand is a world leader in the design and manufacture of highly engineered connector solutions for multiple end markets.

## Why ITT

ITT is a focused multi-industrial company that designs and manufactures highly engineered critical components and customized technology solutions. ITT's Cannon brand is a leading global manufacturer of connector products serving international customers in aerospace, defense, medical, industrial and transportation end markets. ITT's Connector business, which also includes the Veam and BIW Connector Systems brand, manufactures and supplies a variety of connectors and interconnects that make it possible to transfer data, signal and power in an increasingly connected world.

Connect with your ITT Cannon representative today or visit us at ittcannon.com

Follow us


**CHINA - Shenzhen City**
+86.755.2726.7888

**GERMANY - Weinstadt**
+49.7151.699.0

**ITALY - Lainate**
+39.02938721

**KOREA**
+82.2.702.7111

**SHANGHAI**
+ 86.21.2231.2222

**UK - Basingstoke**
+44.1256.347400

**FRANCE**
+33.1.60.04.93.93

**HONG KONG**
+852.2732.2720

**JAPAN - Kanagawa**
+81.462.57.2010

**MEXICO - Nogales**
+52.631.311.0050

**SINGAPORE**
+65 66974205

**USA - Irvine, CA**
+1.800.854.3028



The "ITT Engineered Blocks" symbol, "ITT", "Cannon" and "Veam"are registered trademarks of ITT Inc.
Specification and other data are based on information available at the time of printing, and are subject to change without notice.

© 2024 ITT Inc.



ITT Cannon KPx CAT 07/2024

## Looking for pricing, stock, or lifecycle information?

Click below to explore more details on WIN SOURCE:

- View KPTB14-12PS on WIN SOURCE
- ITT Cannon, LLC Information

## Optimize Your Supply Chain with WIN SOURCE Solutions

- Global Sourcing Solution
- Obsolete Management
- Cost Control Management
- Shortage Management
- Alternative Solution
- Excess Inventory Management