THE DATASHEET OF

CCM012013BPLFTR201

www.win-source.net 0086-755-83957316

REV.	N° DCR	NATURE DE LA MODIFICATION	DATE	VISA
E	ECR-8638	the 6 pins removed	17/12/2012	GP

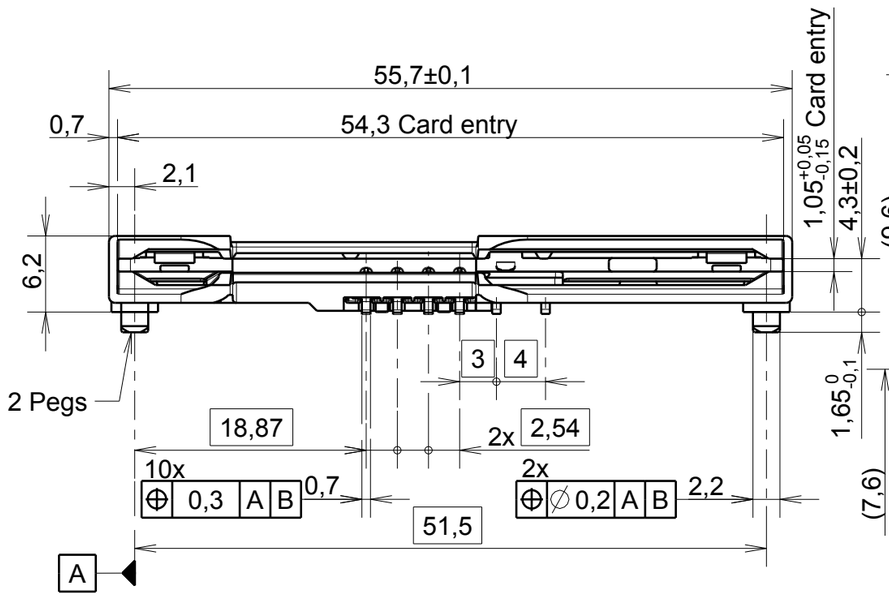

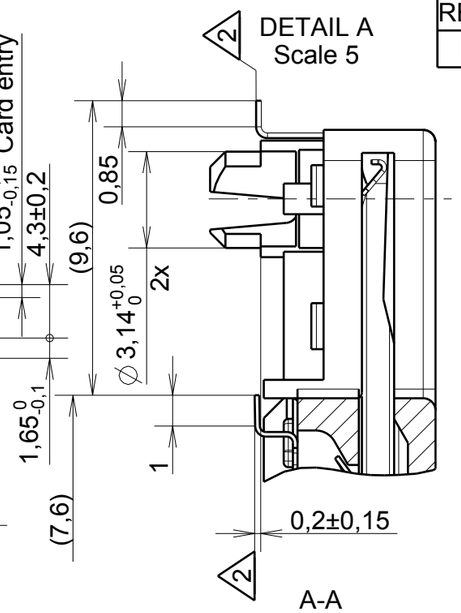

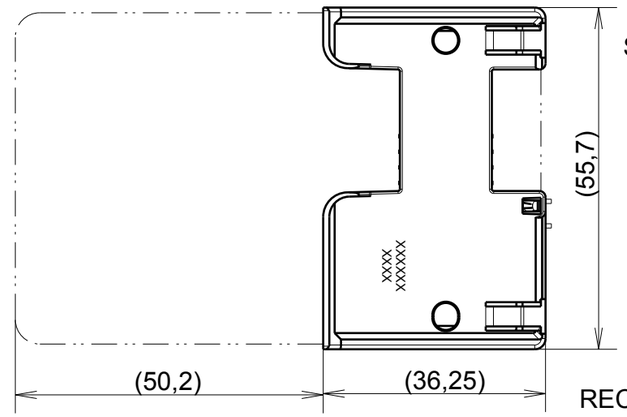

Scale 1

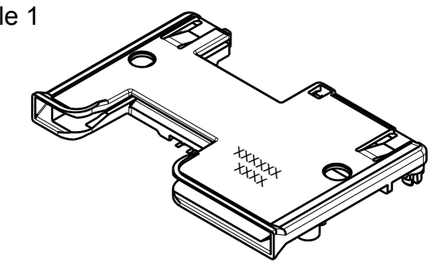

SYSTEM CONFIDENTIAL

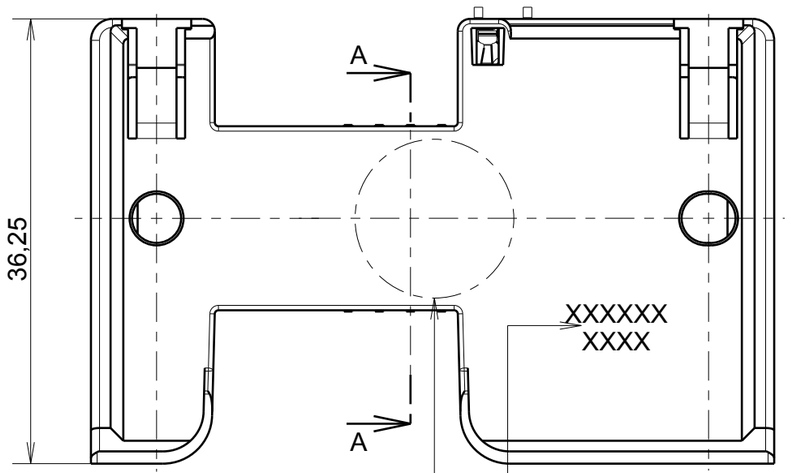

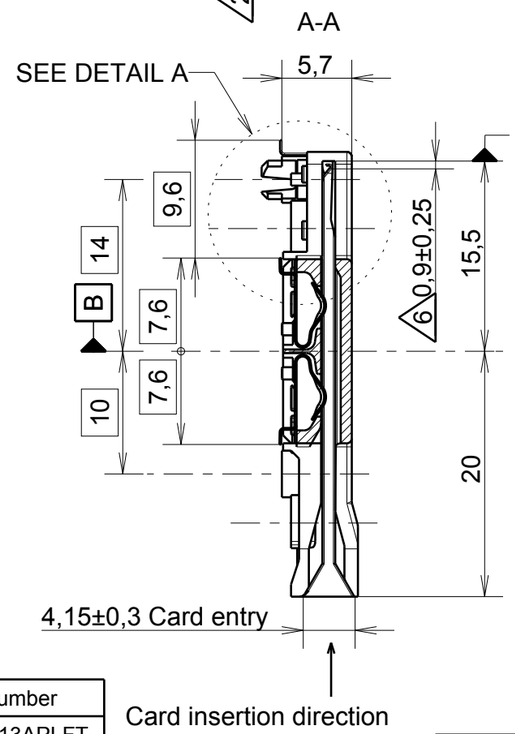

RECOMMENDED PC BOARD LAYOUT
(Component side)

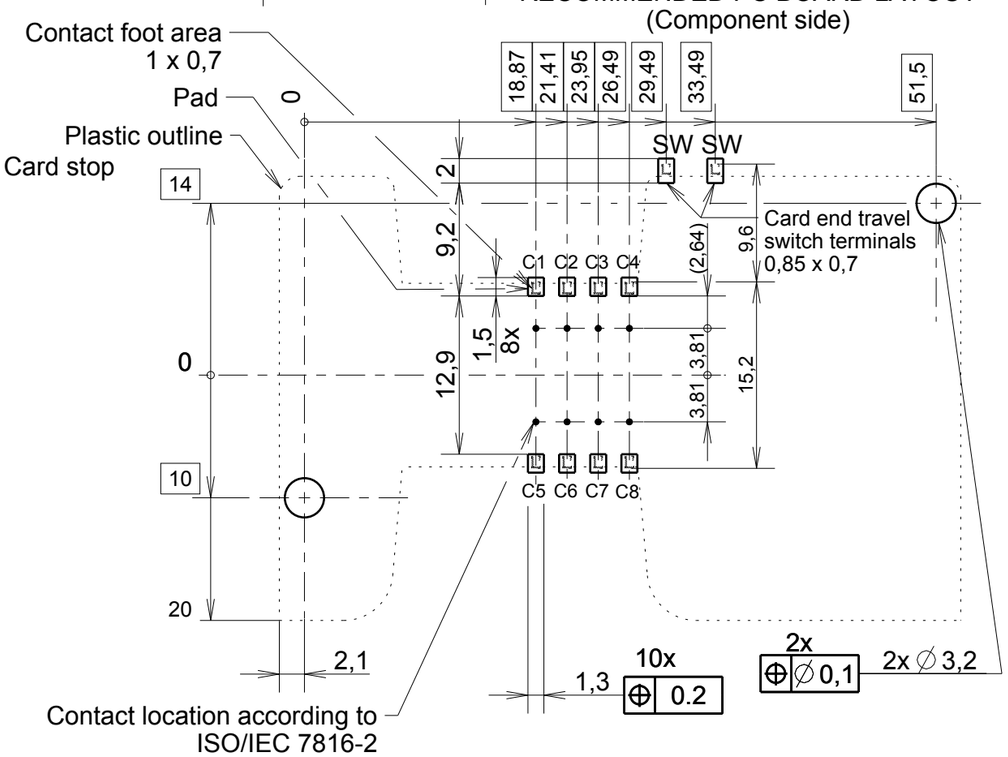

Packaging	Packaging drawing	Marking	Designation	Part Number
Tray 30 parts	030278Y0043	2013TP	CCM01-2013AP LFT T30/	Y1112-2013APLFT
Tray 25 parts	030278Y0064		CCM01-2013CP LFT T25/	Y1112-2013CPLFT
Reel	030278Y0059		CCM01-2013BP LFT R201	Y1112-2013BPLFT

Notes :
- 1 - Termination to PCB : SMT reflow soldering Temperature/time profile according to : C&K PS-LF-001 specification. Since there are no boardlocks , the connector must be held in place on the PCB accross the top face of the cover.
- 2 - Level of each contact tail compared to the nearest plastic stand-off. Coplanarity of metal soldering surfaces : 0,15 mm
- 3 - Recommendation for solder paste thickness ≥ 0,2 mm.
- 4 - 2,5 microns min tin plating on contact terminal areas. 0,1 microns min gold plating on switch terminal areas.
- 5 - Contact forces : - max 0,5 N per contact with max. card thickness. - min 0,2 N per contact with min. card thickness.
- 6 - Card end travel switch NO activates when the sliding card is 0,9 mm from the card stop.
- 7 - In case of customer accessories integration requesting an interface with CCM, please ask C&K for a 3D model.

MATERIAL / VOLUME	TREATMENT	PROTECTION
UNLESS OTHERWISE : - DIMENSIONS GIVEN BEFORE PROTECTION - BURRS AND SHARP EDGES DELETED	ANGULAR TOLERANCE ± 2 ° LINEAR TOLERANCE ± 0,1 SURFACE FINISH Ra . µ	CRITICAL DIMENSIONS ▼ . SPC DIMENSIONS ▼ .
CREATE BY PAILLE V. DATE 03/07/2007		MODIFIED ON THIS REV. ●
CHECKED BY . DATE .	MODIFICATION see revision table on the first sheet REPLACE .	
APPROVED BY . DATE .	FILENAME 1112M1Y2013_JO74IR FOLDER Dossier racine/dole_south_rd/ccm01/mk2/v2	

C&K Components

BP 359 - 39105 Dole - FRANCE -

SCALE 2,00

SIZE A3 SHEET 1 / 1

PART DESCRIPTION
CCM01-2013xPLFT
2 pegs 3,14 mm

PART NUMBER CU 1112M1Y2013 REV E

THIS DRAWING IS THE PROPERTY OF C&K COMPONENTS SAS.
IT CAN NOT BE REPRODUCED OR TRANSMITTED
WITHOUT THE WRITTEN PERMISSION OF C&K COMPONENTS SAS.

Looking for pricing, stock, or lifecycle information?

Click below to explore more details on WIN SOURCE:

- View CCM012013BPLFTR201 on WIN SOURCE
- C&K Components Information

Optimize Your Supply Chain with WIN SOURCE Solutions

- Global Sourcing Solution
- Obsolete Management
- Cost Control Management
- Shortage Management
- Alternative Solution
- Excess Inventory Management