THE DATASHEET OF

C1Q 1.25

www.win-source.net 0086-755-83957316

Type C1Q

Surface Mount Very Fast-Acting Chip Fuse

HF Pb C1Q Series – 1206 Size RoHS Compliant

Features

- Fast Acting, Small size, 1206 SMD
- Current rating from 250mA to 7A
- Wide operating temperature range from -55℃ to 125℃
- Tape and Reel for automatic SMD placement
- Compatible with 260℃ IR Pb-free and wave soldering process
- Full compliance with EU Directive 2011/65/EU and amending directive 2015/863 (MSL = 1)
- Halogen Free, Lead Free
- AEC-Q Compliant
- Meets Bel automotive qualification*

  * - Largely based on internal AEC-Q test plan

AEC-Q Compliant

Applications

- Notebook
- LCD monitor
- PC computer
- Office electronic equipment
- Industrial equipment
- Medical equipment
- POE, POE+
- LCD / LED monitor
- Power supply
- LCD / LED TV
- DC-DC Converter

LEAD FREE = Pb
HALOGEN FREE = HF

Electrical Characteristics (UL/CSA/STD.248-14)

Testing Current	Blow Time	
	Minimum	Maximum
100%	4 Hrs.	N/A
200%	N/A	5 Sec
300%	N/A	0.2 Sec

Safety Agency Approvals

Safety Agency	Safety Agency Certificate	Ampere Rating/ Voltage Rating	Ampere Range / Volt @ I.R. ability*
	LR39772	250mA-5A/125V AC 63V DC 7A/63V AC & DC	250mA-5A/125V AC@100A 63V DC@50A
	E20624		
	E20624		7A/63V AC&DC@50A

*I.R.= Interrupting Rating = Short Circuit Rating(Amps)

Physical Specifications

Materials	Body : Ceramic Substrate
	Terminations : Ag / Ni / Sn (100% Lead-free)
	Element Cover Coating : Lead-free Glass
Marking	On Fuse :
	None
	On Label :
	"bel", "C1Q", "Current Rating", "Voltage Rating", "Interrupting Rating", "Appropriate Safety Logos" and " RoHS ", " e "(China RoHS compliant).

Specifications subject to change without notice

bel POWER SOLUTIONS & PROTECTION
a bel group

belfuse.com/circuit-protection

Temperature Derating Curve

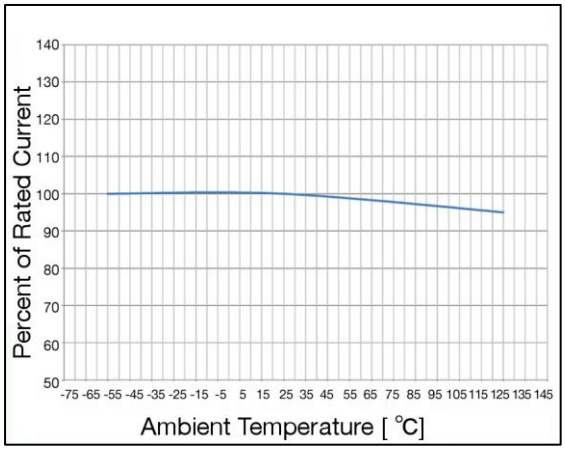

Average Time Current Curve

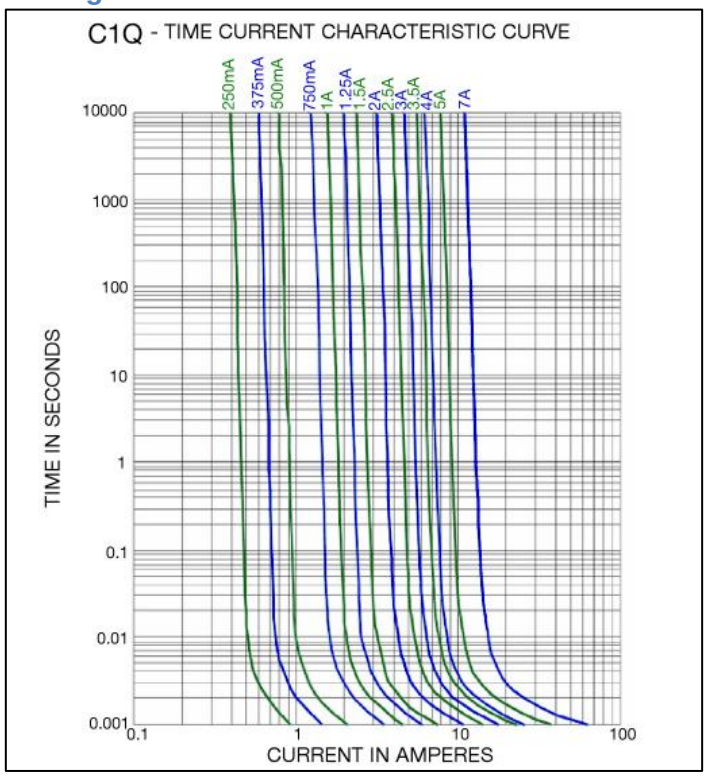

Electrical Specifications

Catalog Number	Ampere Rating (A)	Nominal Cold Resistance (ohms)	Nominal Volt-drop @100% In (Volt)	Voltage and Interrupting Ratings	Melting I²T @10 In (A² Sec)	Nominal Power Dissipation @100% In (W)	Agency Approvals		
C1Q 250	250mA	0.85	0.250	See Table of Safety Approvals on Page 1 for Voltage and associated Interrupting Ratings	0.00003	0.06	Y		Y
C1Q 375	375mA	0.48	0.222		0.00006	0.08	Y		Y
C1Q 500	500mA	0.32	0.195		0.00011	0.10	Y		Y
C1Q 750	750mA	0.175	0.163		0.00042	0.12	Y		Y
C1Q 1	1A	0.124	0.156		0.00096	0.16	Y		Y
C1Q 1.25	1.25A	0.092	0.149		0.0020	0.19	Y		Y
C1Q 1.5	1.5A	0.075	0.142		0.0024	0.21	Y		Y
C1Q 2	2A	0.054	0.140		0.005	0.28	Y		Y
C1Q 2.5	2.5A	0.042	0.138		0.008	0.35	Y		Y
C1Q 3	3A	0.035	0.136		0.020	0.41	Y		Y
C1Q 3.5	3.5A	0.030	0.140		0.029	0.49	Y		Y
C1Q 4	4A	0.028	0.144		0.038	0.58	Y		Y
C1Q 5	5A	0.022	0.154		0.075	0.77	Y		Y
C1Q 7	7A	0.015	0.160		0.116	1.12		Y	

Consult manufacturer for other ratings

Bel Fuse Inc.
206 Van Vorst Street
Jersey City, NJ 07302 USA

+1 201.432.0463
Bel.US.CS@belf.com
belfuse.com/circuit-protection

© 2023 Bel Fuse, Inc.

Environmental Specifications

Shock Resistance	MIL-STD-202G, Method 213B, Test Condition 1 (100 G's peak for 6 milliseconds; Sawtooth waveform)
Vibration Resistance	MIL-STD-202G, Method 201A (10-55 Hz, 0.06 inch, total excursion).
Salt Spray Resistance	MIL-STD-202G, Method 101E, Test Condition B (48 hrs.).
Insulation Resistance	MIL-STD-202G, Method 302, Test Condition A (After Opening) 10,000 ohms minimum.
Solderability	MIL-STD-202G, Method 208H
Resistance to solder Heat	MIL-STD-202G, Method 210F, Test Condition C. Top Side(260℃,20 sec) MIL-STD-202G, Method 210F, Test Condition D. Bottom Side(260℃,10 sec)
Thermal Shock	MIL-STD-202G, Method 107G, Test Condition B (-65℃ to +125℃).
Operating Temperature	-55℃ to +125℃
Moisture Sensitivity Level	1 (According to IPC J-Std-020)

High temperature storage	MIL-STD-202 Method 108
Temperature cycling	JESD22 Method JA-104,Test Condition B
Biased humidity	MIL-STD-202 Method 103, 85C/85% RH with 10% operating power for 1000 hrs.
Operational life	MIL-STD-202 Method 108, Test Condition D
Resistance to solvents	MIL-STD-202 Method 215
Mechanical shock	MIL-STD-202 Method 213,Test Condition C
Vibration	MIL-STD-202 Method 204
Resistance to soldering heat	MIL-STD-202 Method 210,Test condition B
Thermal shock	MIL-STD-202 Method 107
Solderability	J-STD-002
Board flex(SMD)	AEC-Q200-005
Terminal strength	AEC-Q200-006
Electrical characterization	3 temperature electrical

Soldering Parameters

IR Reflow Profile (IPC/JEDEC J-STD-020D)	
Preheat & Soak Temperature min (T_{smin}) Temperature max (T_{smax}) Time (T_{smin} to T_{smax}) (t_s)	150℃ 200℃ 60-120 seconds
Average ramp-up rate (T_{smax} to T_p)	3℃/second max.
Liquidous temperature (T_L) Time at liquidous (t_L)	217℃ 60-150 seconds
Peak temperature (T_p)	260℃ max
Time (tp) within 5℃ of the specified classification temperture (T_c)	30 seconds
Average ramp-down rate (T_p to T_{smax})	6℃/second max.
Time 25℃ to peak temperature	8 minutes max.

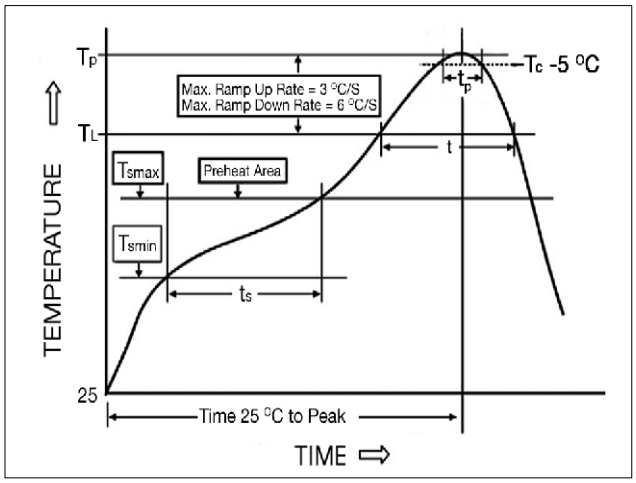

Lead-free Wave Soldering Profile	
Wave Soldering Parameter	
Average ramp-up rate	200℃ / second
Heating rate during preheat	typical 1 - 2℃ / second Max 4℃ / second
Final preheat temperature	within 125℃ of soldering temperature
Peak temperature Tp	260℃
Time within +0℃ / -5℃ of actual peak temperature	10 seconds
Ramp-down rate	5℃ / second max.

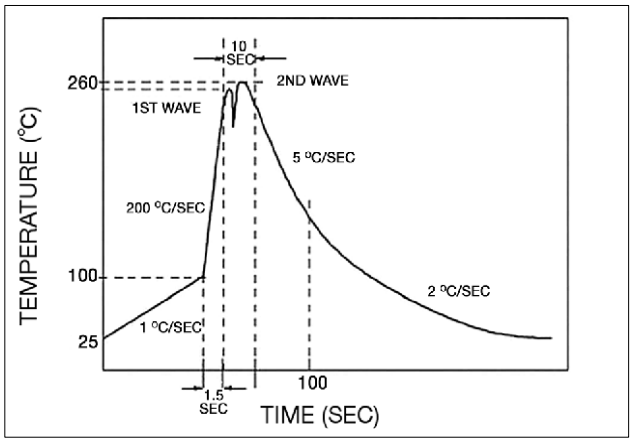

Specifications subject to change without notice

Bel Fuse Inc.
206 Van Vorst Street
Jersey City, NJ 07302 USA

+1 201.432.0463
Bel.US.CS@belf.com
belfuse.com/circuit-protection

© 2023 Bel Fuse, Inc.

Fuse FGNO Explanation
0685 - [XXXX] -XX
[XXXX]=Ampere Rating; XX=See Ordering Information as below

Fraction	Decimal	Milliamps	Bel FGNO[XXXX]
1/4	0.250	250	0250
3/8	.375	375	0375
1/2	.500	500	0500
3/4	.750	750	0750

Fraction	Decimal	Amps	Bel FGNO[XXXX]
	1.0	1	1000
1-1/4	1.25	1.25	1250
1-1/2	1.50	1.5	1500
	2.0	2	2000
2-1/2	2.5	2.5	2500
	3.0	3	3000
3-1/2	3.5	3.5	3500
	4.0	4	4000
	5.0	5	5000
	7.0	7	7000

Mechanical Dimensions

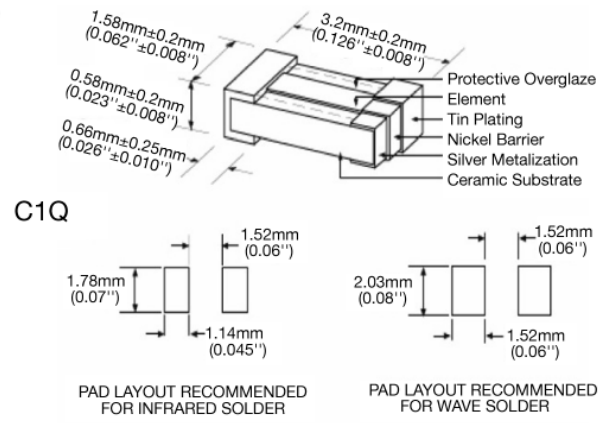

Ordering Information

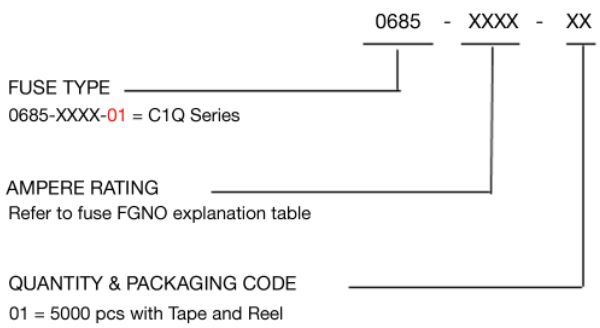

Packaging

Packaging Tape & Reel	Packaging Specification	Quantity	Quantity & Packaging Code
8 mm wide tape with 7 inches Diameter reel	EIA Standard 481-E	5000	0685-XXXX-01

Bel Fuse Inc.
206 Van Vorst Street
Jersey City, NJ 07302 USA

+1 201.432.0463
Bel.US.CS@belf.com
belfuse.com/circuit-protection

© 2023 Bel Fuse, Inc.

Looking for pricing, stock, or lifecycle information?

Click below to explore more details on WIN SOURCE:

- View C1Q 1.25 on WIN SOURCE
- Bel Fuse Inc. Information

Optimize Your Supply Chain with WIN SOURCE Solutions

- Global Sourcing Solution
- Obsolete Management
- Cost Control Management
- Shortage Management
- Alternative Solution
- Excess Inventory Management