THE DATASHEET OF

XC4028XL-09BG352C

www.win-source.net 0086-755-83957316

XC4000XL Electrical Specifications

Definition of Terms

In the following tables, some specifications may be designated as Advance or Preliminary. These terms are defined as follows:

Advance: Initial estimates based on simulation and/or extrapolation from other speed grades, devices, or device families. Values are subject to change. Use as estimates, not for production.

Preliminary: Based on preliminary characterization. Further changes are not expected.

Unmarked: Specifications not identified as either Advance or Preliminary are to be considered Final.

Except for pin-to-pin input and output parameters, the a.c. parameter delay specifications included in this document are derived from measuring internal test patterns. All specifications are representative of worst-case supply voltage and junction temperature conditions.

All specifications subject to change without notice.

XC4000XL D.C. Characteristics

Absolute Maximum Ratings

	Description			Units
V_{CC}	Supply voltage relative to Ground		-0.5 to 4.0	V
V_{IN}	Input voltage relative to Ground (Note 1)		-0.5 to 5.5	V
V_{TS}	Voltage applied to 3-state output (Note 1)		-0.5 to 5.5	V
V_{CCt}	Longest Supply Voltage Rise Time from 1 V to 3V		50	ms
T_{STG}	Storage temperature (ambient)		-65 to +150	°C
T_{SOL}	Maximum soldering temperature (10 s @ 1/16 in. = 1.5 mm)		+260	°C
T_J	Junction Temperature	Ceramic packages	+150	°C
		Plastic packages	+125	°C

Note 1: Maximum DC excursion above V_{cc} or below Ground must be limited to either 0.5 V or 10 mA, whichever is easier to achieve. During transitions, the device pins may undershoot to -2.0 V or overshoot toV_{CC} +2.0 V, provided this over or undershoot lasts less than 10 ns and with the forcing current being limited to 200 mA.

Note: Stresses beyond those listed under Absolute Maximum Ratings may cause permanent damage to the device. These are stress ratings only, and functional operation of the device at these or any other conditions beyond those listed under Recommended Operating Conditions is not implied. Exposure to Absolute Maximum Ratings conditions for extended periods of time may affect device reliability.

Recommended Operating Conditions

Symbol	Description		Min	Max	Units
V_{CC}	Supply voltage relative to Gnd, T_J = 0 °C to +85°C	Commercial	3.0	3.6	V
	Supply voltage relative to Gnd, T_J = -40°C to +100°C	Industrial	3.0	3.6	V
V_{IH}	High-level input voltage		50% of V_{CC}	5.5	V
V_{IL}	Low-level input voltage		0	30% of V_{CC}	V
T_{IN}	Input signal transition time			250	ns

Notes: At junction temperatures above those listed above, all delay parameters increase by 0.35% per °C.
Input and output measurement threshold is ~50% of V_{CC}.

D.C. Characteristics Over Recommended Operating Conditions

Symbol	Description		Min	Max	Units
V_{OH}	High-level output voltage @ I_{OH} = -4.0 mA, V_{CC} min (LVTTL)		2.4		V
	High-level output voltage @ I_{OH} = -500 µA, (LVCMOS)		90% V_{CC}		V
V_{OL}	Low-level output voltage @ I_{OL} = 12.0 mA, V_{CC} min (LVTTL) (Note 1)			0.4	V
	Low-level output voltage @ I_{OL} = 1500 µA, (LVCMOS)			10% V_{CC}	V
V_{DR}	Data Retention Supply Voltage (below which configuration data may be lost)		2.5		V
I_{CCO}	Quiescent FPGA supply current (Note 2)			5	mA
I_L	Input or output leakage current		-10	+10	µA
C_{IN}	Input capacitance (sample tested)	BGA, SBGA, PQ, HQ, MQ packages		10	pF
		PGA packages		16	pF
I_{RPU}	Pad pull-up (when selected) @ V_{in} = 0 V (sample tested)		0.02	0.25	mA
I_{RPD}	Pad pull-down (when selected) @ V_{in} = 3.6 V (sample tested)		0.02	0.15	mA
I_{RLL}	Horizontal Longline pull-up (when selected) @ logic Low		0.3	2.0	mA

Note 1: With up to 64 pins simultaneously sinking 12 mA.
Note 2: With no output current loads, no active input or Longline pull-up resistors, all I/O pins Tri-stated and floating.

Power-0n Power Supply Requirements

Xilinx FPGAs require a minimum rated power supply current capacity to insure proper initialization, and the power supply ramp-up time does affect the current required. A fast ramp-up time requires more current than a slow ramp-up time. The slowest ramp-up time is 50 ms. Current capacity is not specified for a ramp-up time faster than 2ms. The current capacity varies linealy with ramp-up time, *e.g.*, an XC4036XL with a ramp-up time of 25 ms would require a capacity predicted by the point on the straight line drawn from 1A at 120 µs to 500 mA at 50 ms at the 25 ms time mark. This point is approximately 750 mA .

Product	Description	Ramp-up Time	
		Fast (120 µs)	Slow (50 ms)
XC4005 - 36XL	Minimum required current supply	1 A	500 mA
XC4044- 62XL	Minimum required current supply	2 A	500 mA
XC4085XL[1]	Minimum required current supply	2 A[1]	500 mA

Notes: 1. The XC4085XL fast ramp-up time is 5 ms.
Devices are guaranteed to initialize properly with the minimum current listed above. A larger capacity power supply may result in a larger initialization current.
This specification applies to Commercial and Industrial grade products only.
Ramp-up Time is measured from 0 V_{DC} to 3.6 V_{DC}. Peak current required lasts less than 3 ms, and occurs near the internal power on reset threshold voltage. After initialization and before configuration, I_{CC}max is less than 10 mA.

XC4000XL A.C. Characteristics

Testing of the switching parameters is modeled after testing methods specified by MIL-M-38510/605. All devices are 100% functionally tested. Internal timing parameters are derived from measuring internal test patterns. Listed below are representative values where one global clock input drives one vertical clock line in each accessible column, and where all accessible IOB and CLB flip-flops are clocked by the global clock net.

When fewer vertical clock lines are connected, the clock distribution is faster; when multiple clock lines per column are driven from the same global clock, the delay is longer. For more specific, more precise, and worst-case guaranteed data, reflecting the actual routing structure, use the values provided by the static timing analyzer (TRCE in the Xilinx Development System) and back-annotated to the simulation netlist. These path delays, provided as a guideline, have been extracted from the static timing analyzer report. All timing parameters assume worst-case operating conditions (supply voltage and junction temperature. Values apply to all XC4000XL devices and are expressed in nanoseconds unless otherwise noted.

Global Low Skew Buffer to Clock K

		Speed Grade	All	-3	-2	-1	-09	-08	Units
Description	Symbol	Device	Min	Max	Max	Max	Max	Max	
Delay from pad through GLS buffer to any clock input, K	T_{GLS}	XC4002XL	0.3	2.1	1.8	1.6	1.5		ns
		XC4005XL	0.4	2.7	2.3	2.0	1.9		ns
		XC4010XL	0.5	3.2	2.8	2.4	2.3		ns
		XC4013XL	0.6	3.6	3.1	2.7	2.6	2.3	ns
		XC4020XL	0.7	4.0	3.5	3.0	2.9		ns
		XC4028XL	0.9	4.4	3.8	3.3	3.2		ns
		XC4036XL	1.1	4.8	4.2	3.6	3.5	3.1	ns
		XC4044XL	1.2	5.3	4.6	4.0	3.9		ns
		XC4052XL	1.3	5.7	5.0	4.5	4.4		ns
		XC4062XL	1.4	6.3	5.4	4.7	4.6	4.0	ns
		XC4085XL	1.6	7.2	6.2	5.7	5.5		ns

Global Early BUFGEs 1, 2, 5, and 6 to IOB Clock

		Speed Grade	All	-3	-2	-1	-09	-08	Units
Description	Symbol	Device	Min	Max	Max	Max	Max	Max	
Delay from pad through GE buffer to any IOB clock input.	T_{GE}	XC4002XL	0.1	1.6	1.4	1.3	1.2		ns
		XC4005XL	0.3	1.9	1.8	1.7	1.6		ns
		XC4010XL	0.3	2.2	1.9	1.7	1.7		ns
		XC4013XL	0.4	2.4	2.1	1.8	1.7	1.5	ns
		XC4020XL	0.4	2.6	2.2	2.1	2.0		ns
		XC4028XL	0.3	2.8	2.4	2.1	2.0		ns
		XC4036XL	0.3	3.1	2.7	2.3	2.2	1.9	ns
		XC4044XL	0.2	3.5	3.0	2.6	2.4		ns
		XC4052XL	0.3	4.0	3.5	3.0	3.0		ns
		XC4062XL	0.3	4.9	4.3	3.7	3.4	3.0	ns
		XC4085XL	0.4	5.8	5.1	4.7	4.3		ns

Global Early BUFGEs 3, 4, 7, and 8 to IOB Clock

		Speed Grade	All	-3	-2	-1	-09	-08	Units
Description	Symbol	Device	Min	Max	Max	Max	Max	Max	
Delay from pad through GE buffer to any IOB clock input.	T_{GE}	XC4002XL	0.5	2.8	2.5	2.1	1.7		ns
		XC4005XL	0.7	3.1	2.8	2.7	2.5		ns
		XC4010XL	0.7	3.5	3.1	2.8	2.7		ns
		XC4013XL	0.7	3.8	3.3	2.9	2.8	2.4	ns
		XC4020XL	0.8	4.1	3.6	3.4	3.2		ns
		XC4028XL	0.9	4.4	3.9	3.4	3.3		ns
		XC4036XL	0.9	4.7	4.2	3.7	3.6	3.1	ns
		XC4044XL	1.0	5.1	4.5	4.0	3.7		ns
		XC4052XL	1.1	5.5	4.8	4.3	4.3		ns
		XC4062XL	1.2	5.9	5.2	4.8	4.5	4.0	ns
		XC4085XL	1.3	6.8	6.0	5.5	5.2		ns

XC4000XL CLB Characteristics

Testing of switching parameters is modeled after testing methods specified by MIL-M-38510/605. All devices are 100% functionally tested. Internal timing parameters are derived from measuring internal test patterns. Listed below are representative values. For more specific, more precise, and worst-case guaranteed data, use the values reported by the static timing analyzer (TRCE in the Xilinx Development System) and back-annotated to the simulation netlist. All timing parameters assume worst-case operating conditions (supply voltage and junction temperature). Values apply to all XC4000XL devices and are expressed in nanoseconds unless otherwise noted.

CLB Switching Characteristic Guidelines

	Speed Grade	-3		-2		-1		-09		-08	
Description	**Symbol**	**Min**	**Max**	**Min**	**Max**	**Min**	**Max**	**Min**	**Max**	**Min**	**Max**
Combinatorial Delays											
F/G inputs to X/Y outputs	T_{ILO}		1.6		1.5		1.3		1.2		1.1
F/G inputs via H' to X/Y outputs	T_{IHO}		2.7		2.4		2.2		2.0		1.9
F/G inputs via transparent latch to Q outputs	T_{ITO}		2.9		2.6		2.2		2.0		1.8
C inputs via SR/H0 via H to X/Y outputs	T_{HH0O}		2.5		2.2		2.0		1.8		1.8
C inputs via H1 via H to X/Y outputs	T_{HH1O}		2.4		2.1		1.9		1.6		1.5
C inputs via DIN/H2 via H to X/Y outputs	T_{HH2O}		2.5		2.2		2.0		1.8		1.8
C inputs via EC, DIN/H2 to YQ, XQ output (bypass)	T_{CBYP}		1.5		1.3		1.1		1.0		0.9
CLB Fast Carry Logic											
Operand inputs (F1, F2, G1, G4) to C_{OUT}	T_{OPCY}		2.7		2.3		2.0		1.6		1.6
Add/Subtract input (F3) to C_{OUT}	T_{ASCY}		3.3		2.9		2.5		1.8		1.8
Initialization inputs (F1, F3) to C_{OUT}	T_{INCY}		2.0		1.8		1.5		1.0		0.9
C_{IN} through function generators to X/Y outputs	T_{SUM}		2.8		2.6		2.4		1.7		1.5
C_{IN} to C_{OUT}, bypass function generators	T_{BYP}		0.26		0.23		0.20		0.14		0.14
Carry Net Delay, C_{OUT} to C_{IN}	T_{NET}		0.32		0.28		0.25		0.24		0.24
Sequential Delays											
Clock K to Flip-Flop outputs Q	T_{CKO}		2.1		1.9		1.6		1.5		1.4
Clock K to Latch outputs Q	T_{CKLO}		2.1		1.9		1.6		1.5		1.4
Setup Time before Clock K											
F/G inputs	T_{ICK}	1.1		1.0		0.9		0.8		0.8	
F/G inputs via H	T_{IHCK}	2.2		1.9		1.7		1.6		1.5	
C inputs via H0 through H	T_{HH0CK}	2.0		1.7		1.6		1.4		1.4	
C inputs via H1 through H	T_{HH1CK}	1.9		1.6		1.4		1.2		1.1	
C inputs via H2 through H	T_{HH2CK}	2.0		1.7		1.6		1.4		1.4	
C inputs via DIN	T_{DICK}	0.9		0.8		0.7		0.6		0.6	
C inputs via EC	T_{ECCK}	1.0		0.9		0.8		0.7		0.7	
C inputs via S/R, going Low (inactive)	T_{RCK}	0.6		0.5		0.5		0.4		0.4	
CIN input via F/G	T_{CCK}	2.3		2.1		1.9		1.3		1.2	
CIN input via F/G and H	T_{CHCK}	3.4		3.0		2.7		2.1		2.0	
Hold Time after Clock K											
F/G inputs	T_{CKI}	0		0		0		0		0	
F/G inputs via H	T_{CKIH}	0		0		0		0		0	
C inputs via SR/H0 through H	T_{CKHH0}	0		0		0		0		0	
C inputs via H1 through H	T_{CKHH1}	0		0		0		0		0	
C inputs via DIN/H2 through H	T_{CKHH2}	0		0		0		0		0	
C inputs via DIN/H2	T_{CKDI}	0		0		0		0		0	
C inputs via EC	T_{CKEC}	0		0		0		0		0	
C inputs via SR, going Low (inactive)	T_{CKR}	0		0		0		0		0	
Clock											
Clock High time	T_{CH}	3.0		2.8		2.5		2.3		2.1	
Clock Low time	T_{CL}	3.0		2.8		2.5		2.3		2.1	
Set/Reset Direct											
Width (High)	T_{RPW}	3.0		2.8		2.5		2.3		2.3	
Delay from C inputs via S/R, going High to Q	T_{RIO}		3.7		3.2		2.8		2.7		2.6
Global Set/Reset											
Minimum GSR Pulse Width	T_{MRW}		19.8		17.3		15.0		14.0		14.0
Delay from GSR input to any Q	T_{MRQ}	See Table on page 85 for T_{RRI} values per device.									
Toggle Frequency (MHz) (for export control)	F_{TOG} (MHz)		166		179		200		217		238

CLB Single-Port RAM Synchronous (Edge-Triggered) Write Operation Guidelines

Testing of switching parameters is modeled after testing methods specified by MIL-M-38510/605. All devices are 100% functionally tested. Internal timing parameters are derived from measuring internal test patterns. Listed below are representative values. For more specific, more precise, and worst-case guaranteed data, use the values reported by the static timing analyzer (TRCE in the Xilinx Development System) and back-annotated to the simulation netlist. All timing parameters assume worst-case operating conditions (supply voltage and junction temperature). Values apply to all XC4000XL devices and are expressed in nanoseconds unless otherwise noted.

Single Port RAM	Speed Grade		-3		-2		-1		-09		-08	
	Size	Symbol	Min	Max	Min	Max	Min	Max	Min	Max	Min	Max
Write Operation												
Address write cycle time (clock K period)	16x2 32x1	T_{WCS} T_{WCTS}	9.0 9.0		8.4 8.4		7.7 7.7		7.4 7.4		7.4 7.4	
Clock K pulse width (active edge)	16x2 32x1	T_{WPS} T_{WPTS}	4.5 4.5		4.2 4.2		3.9 3.9		3.7 3.7		3.7 3.7	
Address setup time before clock K	16x2 32x1	T_{ASS} T_{ASTS}	2.2 2.2		2.0 2.0		1.7 1.7		1.7 1.7		1.6 1.7	
Address hold time after clock K	16x2 32x1	T_{AHS} T_{AHTS}	0 0		0 0		0 0		0 0		0 0	
DIN setup time before clock K	16x2 32x1	T_{DSS} T_{DSTS}	2.0 2.5		1.9 2.3		1.7 2.1		1.7 2.1		1.7 2.1	
DIN hold time after clock K	16x2 32x1	T_{DHS} T_{DHTS}	0 0		0 0		0 0		0 0		0 0	
WE setup time before clock K	16x2 32x1	T_{WSS} T_{WSTS}	2.0 1.8		1.8 1.7		1.6 1.5		1.6 1.5		1.6 1.5	
WE hold time after clock K	16x2 32x1	T_{WHS} T_{WHTS}	0 0		0 0		0 0		0 0		0 0	
Data valid after clock K	16x2 32x1	T_{WOS} T_{WOTS}		6.8 8.1		6.3 7.5		5.8 6.9		5.8 6.7		5.7 6.7
Read Operation												
Address read cycle time	16x2 32x1	T_{RC} T_{RCT}	4.5 6.5		3.1 5.5		2.6 3.8		2.6 3.8		2.6 3.8	
Data Valid after address change (no Write Enable)	16x2 32x1	T_{ILO} T_{IHO}		1.6 2.7		1.5 2.4		1.3 2.2		1.2 2.0		1.1 1.9
Address setup time before clock K	16x2 32x1	T_{ICK} T_{IHCK}	1.1 2.2		1.0 1.9		0.9 1.7		0.8 1.6		0.8 1.5	

CLB Dual-Port RAM Synchronous (Edge-Triggered) Write Operation Guidelines

Testing of switching parameters is modeled after testing methods specified by MIL-M-38510/605. All devices are 100% functionally tested. Internal timing parameters are derived from measuring internal test patterns. Listed below are representative values. For more specific, more precise, and worst-case guaranteed data, use the values reported by the static timing analyzer (TRCE in the Xilinx Development System) and back-annotated to the simulation netlist. All timing parameters assume worst-case operating conditions (supply voltage and junction temperature). Values apply to all XC4000XL devices and are expressed in nanoseconds unless otherwise noted.

Dual Port RAM	Speed Grade		-3		-2		--1		-09		-08	
	Size	Symbol	Min	Max	Min	Max	Min	Max	Min	Max	Min	Max
Address write cycle time (clock K period)	16x1	T_{WCDS}	9.0		8.4		7.7		7.4		7.4	
Clock K pulse width (active edge)	16x1	T_{WPDS}	4.5		4.2		3.9		3.7		3.7	
Address setup time before clock K	16x1	T_{ASDS}	2.5		2.0		1.7		1.7		1.6	
Address hold time after clock K	16x1	T_{AHDS}	0		0		0		0		0	
DIN setup time before clock K	16x1	T_{DSDS}	2.5		2.3		2.0		2.0		2.0	
DIN hold time after clock K	16x1	T_{DHDS}	0		0		0		0		0	
WE setup time before clock K	16x1	T_{WSDS}	1.8		1.7		1.6		1.6		1.6	
WE hold time after clock K	16x1	T_{WHDS}	0		0		0		0		0	
Data valid after clock K	16x1	T_{WODS}		7.8		7.3		6.7		6.7		6.6

CLB RAM Synchronous (Edge-Triggered) Write Timing Waveforms

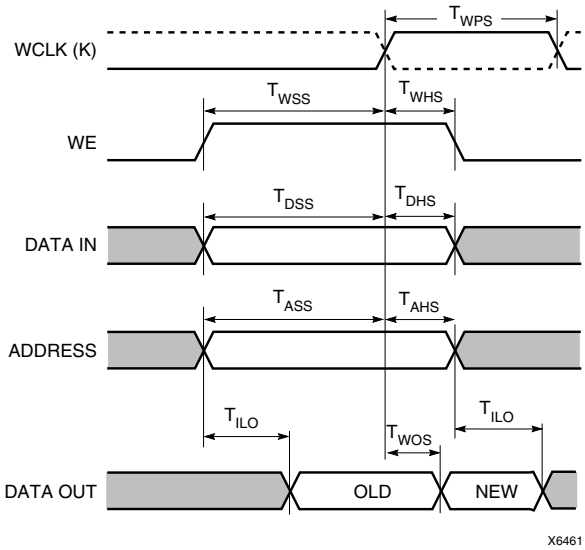

Single-Port RAM

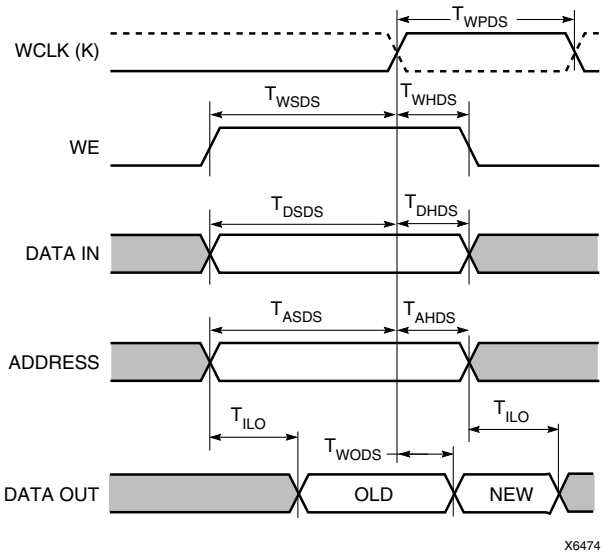

Dual-Port RAM

XC4000XL Pin-to-Pin Output Parameter Guidelines

Testing of switching parameters is modeled after testing methods specified by MIL-M-38510/605. All devices are 100% functionally tested. Pin-to-pin timing parameters are derived from measuring external and internal test patterns and are guaranteed over worst-case operating conditions (supply voltage and junction temperature). Listed below are representative values for typical pin locations and normal clock loading. For more specific, more precise, and worst-case guaranteed data, reflecting the actual routing structure, use the values provided by the static timing analyzer (TRCE in the Xilinx Development System) and back-annotated to the simulation netlist. These path delays, provided as a guideline, have been extracted from the static timing analyzer report. Values are expressed in nanoseconds unless otherwise noted.

Output Flip-Flop, Clock to Out

		Speed Grade	All	-3	-2	-1	-09	-08	Units
Description	**Symbol**	**Device**	**Min**	**Max**	**Max**	**Max**	**Max**	**Max**	
Global Low Skew Clock to Output using Output Flip Flop	T_{ICKOF}	XC4002XL	1.2	7.1	6.1	5.4	5.1		ns
		XC4005XL	1.3	7.7	6.6	5.8	5.4		ns
		XC4010XL	1.4	8.2	7.1	6.2	5.8		ns
		XC4013XL	1.5	8.6	7.4	6.5	6.1	5.6	ns
		XC4020XL	1.6	9.0	7.8	6.8	6.4		ns
		XC4028XL	1.8	9.4	8.1	7.1	6.7		ns
		XC4036XL	2.0	9.8	8.5	7.4	7.0	6.4	ns
		XC4044XL	2.1	10.3	8.9	7.8	7.4		ns
		XC4052XL	2.2	10.7	9.3	8.3	7.9		ns
		XC4062XL	2.3	11.3	9.7	8.5	8.1	7.3	ns
		XC4085XL	2.5	12.2	10.5	9.5	9.0		ns
For output SLOW option add	T_{SLOW}	All Devices	0.5	3.0	2.5	2.0	1.7	1.6	ns

Notes: Clock-to-out minimum delay is measured with the fastest route and the lightest load, Clock-to-out maximum delay is measured using the farthest distance and a reference load of one clock pin (IK or OK) per IOB as well as driving all accessible CLB flip-flops. For designs with a smaller number of clock loads, the pad-to-IOB clock pin delay as determined by the static timing analyzer (TRCE) can be added to the AC parameter Tokpof and used as a worst-case pin-to-pin clock-to-out delay for clocked outputs for FAST mode configurations.
Output timing is measured at ~50% V_{CC} threshold with 50 pF external capacitive load. For different loads, see Figure 1.

Capacitive Load Factor

Figure 1 shows the relationship between I/O output delay and load capacitance. It allows a user to adjust the specified output delay if the load capacitance is different than 50 pF. For example, if the actual load capacitance is 120 pF, add 2.5 ns to the specified delay. If the load capacitance is 20 pF, subtract 0.8 ns from the specified output delay.

Figure 1 is usable over the specified operating conditions of voltage and temperature and is independent of the output slew rate control.

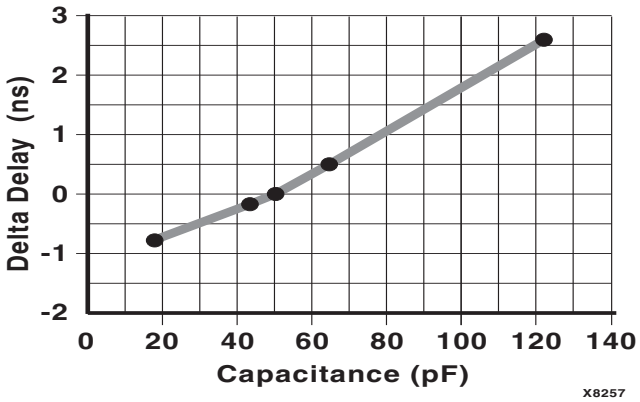

Figure 1: Delay Factor at Various Capacitive Loads

Output Flip-Flop, Clock to Out, BUFGE #s 1, 2, 5, and 6

		Speed Grade	All	-3	-2	-1	-09	-08	Units
Description	Symbol	Device	Min	Max	Max	Max	Max	Max	
Global Early Clock to Output using Output Flip Flop. Values are for BUFGE #s 1, 2, 5, and 6.	T_{ICKEOF}	XC4002XL	1.0	6.6	5.7	5.1	4.8		ns
		XC4005XL	1.2	6.9	6.1	5.5	5.2		ns
		XC4010XL	1.2	7.2	6.2	5.5	5.3		ns
		XC4013XL	1.3	7.4	6.4	5.6	5.3	4.8	ns
		XC4020XL	1.3	7.6	6.5	5.9	5.6		ns
		XC4028XL	1.2	7.8	6.7	5.9	5.6		ns
		XC4036XL	1.2	8.1	7.0	6.1	5.8	5.2	ns
		XC4044XL	1.1	8.5	7.3	6.4	6.0		ns
		XC4052XL	1.2	9.0	7.8	6.8	6.6		ns
		XC4062XL	1.2	9.9	8.6	7.5	7.0	6.3	ns
		XC4085XL	1.3	10.8	9.4	8.5	7.9		ns

Notes: Clock-to-out minimum delay is measured with the fastest route and the lightest load, Clock-to-out maximum delay is measured using the farthest distance and a reference load of one clock pin (IK or OK) per IOB as well as driving all accessible CLB flip-flops. For designs with a smaller number of clock loads, the pad-to-IOB clock pin delay as determined by the static timing analyzer (TRCE) can be added to the AC parameter Tokpof and used as a worst-case pin-to-pin clock-to-out delay for clocked outputs for FAST mode configurations.

Output timing is measured at ~50% V_{CC} threshold with 50 pF external capacitive load. For different loads, see Figure 1.

Output Flip-Flop, Clock to Out, BUFGE #s 3, 4, 7, and 8

		Speed Grade	All	-3	-2	-1	-09	-08	Units
Description	Symbol	Device	Min	Max	Max	Max	Max	Max	
Global Early Clock to Output using Output Flip Flop. Values are for BUFGE #s 3, 4, 7, and 8.	T_{ICKEOF}	XC4002XL	1.3	7.8	6.8	5.9	5.3		ns
		XC4005XL	1.5	8.1	7.1	6.5	6.1		ns
		XC4010XL	1.6	8.5	7.4	6.6	6.3		ns
		XC4013XL	1.6	8.8	7.6	6.7	6.4	5.7	ns
		XC4020XL	1.7	9.1	7.9	7.2	6.8		ns
		XC4028XL	1.7	9.4	8.2	7.2	6.9		ns
		XC4036XL	1.8	9.7	8.5	7.5	7.2	6.4	ns
		XC4044XL	1.9	10.1	8.8	7.8	7.3		ns
		XC4052XL	2.0	10.5	9.1	8.1	7.9		ns
		XC4062XL	2.0	10.9	9.5	8.6	8.1	7.3	ns
		XC4085XL	2.2	11.8	10.3	9.3	8.8		ns

Notes: Clock-to-out minimum delay is measured with the fastest route and the lightest load, Clock-to-out maximum delay is measured using the farthest distance and a reference load of one clock pin (IK or OK) per IOB as well as driving all accessible CLB flip-flops. For designs with a smaller number of clock loads, the pad-to-IOB clock pin delay as determined by the static timing analyzer (TRCE) can be added to the AC parameter Tokpof and used as a worst-case pin-to-pin clock-to-out delay for clocked outputs for FAST mode configurations.

Output timing is measured at ~50% V_{CC} threshold with 50 pF external capacitive load. For different loads, see Figure 1.

XC4000XL Pin-to-Pin Input Parameter Guidelines

Testing of switching parameters is modeled after testing methods specified by MIL-M-38510/605. All devices are 100% functionally tested. Pin-to-pin timing parameters are derived from measuring external and internal test patterns and are guaranteed over worst-case operating conditions (supply voltage and junction temperature). Listed below are representative values for typical pin locations and normal clock loading. For more specific, more precise, and worst-case guaranteed data, reflecting the actual routing structure, use the values provided by the static timing analyzer (TRCE in the Xilinx Development System) and back-annotated to the simulation netlist. These path delays, provided as a guideline, have been extracted from the static timing analyzer report. Values are expressed in nanoseconds unless otherwise noted

Global Low Skew Clock, Set-Up and Hold

		Speed Grade	-3	-2	-1	-09	-08	Units
Description	**Symbol**	**Device**	**Min**	**Min**	**Min**	**Min**	**Min**	
Input Setup and Hold Times								
No Delay	T_{PSN}/T_{PHN}	XC4002XL	2.5 / 1.5	2.2 / 1.3	1.9 / 1.2	1.7 / 1.0		ns
Global Low Skew Clock and IFF		XC4005XL	1.2 / 2.6	1.1 / 2.2	0.9 / 2.0	0.8 / 1.7		ns
Global Low Skew Clock and FCL		XC4010XL	1.2 / 3.0	1.1 / 2.6	0.9 / 2.3	0.8 / 2.0		ns
		XC4013XL	1.2 / 3.2	1.1 / 2.8	0.9 / 2.4	0.8 / 2.1	0.8 / 2.1	ns
		XC4020XL	1.2 / 3.7	1.1 / 3.2	0.9 / 2.8	0.8 / 2.4		ns
		XC4028XL	1.2 / 4.4	1.1 / 3.8	0.9 / 3.3	0.8 / 2.9		ns
		XC4036XL	1.2 / 5.5	1.1 / 4.8	0.9 / 4.1	0.8 / 3.6	0.8 / 3.6	ns
		XC4044XL	1.2 / 5.8	1.1 / 5.0	0.9 / 4.4	0.8 / 3.8		ns
		XC4052XL	1.2 / 7.1	1.1 / 6.2	0.9 / 5.4	0.8 / 4.7		ns
		XC4062XL	1.2 / 7.0	1.1 / 6.1	0.9 / 5.3	0.8 / 4.6	0.8 / 4.6	ns
		XC4085XL	1.2 / 9.4	1.1 / 8.2	0.9 / 7.1	0.8 / 6.2		ns
Partial Delay	T_{PSP}/T_{PHP}	XC4002XL	8.4 / 0.0	7.3 / 0.0	6.3 / 0.0	5.5 / 0.0		ns
Global Low Skew Clock and IFF		XC4005XL	10. 5 / 0.0	9.1 / 0.0	7.9 / 0.0	6.9 / 0.0		ns
Global Low Skew Clock and FCL		XC4010XL	11.1 / 0.0	9.7 / 0.0	8.4 / 0.0	7.3 / 0.0		ns
		XC4013XL*	6.1 / 1.0	5.3 / 1.0	4.6 / 1.0	4.0 / 1.0	3.7 / 0.5	ns
		XC4020XL	11.9 / 1.0	10.3 / 1.0	9.0 / 1.0	7.8 / 1.0		ns
		XC4028XL	12.3 / 1.0	10.7 / 1.0	9.3 / 1.0	8.1 / 1.0		ns
		XC4036XL*	6.4 / 1.0	5.6 / 1.0	4.8 / 1.0	4.2 / 1.0	4.0/ 0.8	ns
		XC4044XL	13.1 / 1.0	11.4 / 1.0	9.9 / 1.0	8.6 / 1.0		ns
		XC4052XL	11.9 / 1.0	10.3 / 1.0	9.0 / 1.0	7.8 / 1.0		ns
		XC4062XL*	6.7 / 1.2	5.8 / 1.2	5.1 / 1.2	4.4 / 1.2	4.2/ 1.0	ns
		XC4085XL	12.9 / 1.2	11.2 / 1.2	9.8 / 1.2	8.5 / 1.2		ns
Full Delay	T_{PSD}/T_{PHD}	XC4002XL	6.8 / 0.0	6.0 / 0.0	5.2 / 0.0	4.5 / 0.0		ns
Global Low Skew Clock and IFF		XC4005XL	8.8 / 0.0	7.6 / 0.0	6.6 / 0.0	5.6 / 0.0		ns
		XC4010XL	9.0 / 0.0	7.8 / 0.0	6.8 / 0.0	5.8 / 0.0		ns
		XC4013XL*	6.4 / 0.0	6.0 / 0.0	5.6 / 0.0	4.8 / 0.0	4.8 / 0.0	ns
		XC4020XL	8.8 / 0.0	7.6 / 0.0	6.6 / 0.0	6.2 / 0.0		ns
		XC4028XL	9.3 / 0.0	8.1 / 0.0	7.0 / 0.0	6.4 / 0.0		ns
		XC4036XL*	6.6 / 0.0	6.2 / 0.0	5.8 / 0.0	5.3 / 0.0	5.3 / 0.0	ns
		XC4044XL	10.6 / 0.0	9.2 / 0.0	8.0 / 0.0	6.8 / 0.0		ns
		XC4052XL	11.2 / 0.0	9.7 / 0.0	8.4 / 0.0	7.0 / 0.0		ns
		XC4062XL*	6.8 / 0.0	6.4 / 0.0	6.0 / 0.0	5.5 / 0.0	5.5 / 0.0	ns
		XC4085XL	12.7 / 0.0	11.0 / 0.0	9.6 / 0.0	8.4 / 0.0		ns

IFF = Input Flip-Flop or Latch
* The XC4013XL, XC4036XL, and 4062XL have significantly faster partial and full delay setup times than other devices.
Notes: Input setup time is measured with the fastest route and the lightest load.
Input hold time is measured using the furthest distance and a reference load of one clock pin per IOB as well as driving all accessible CLB flip-flops. For designs with a smaller number of clock loads, the pad-to-IOB clock pin delay as determined by the static timing analyzer (TRCE) can be used as a worst-case pin-to-pin no-delay input hold specification.

Global Early Clock BUFGEs 1, 2, 5, and 6 Set-up and Hold for IFF and FCL

		Speed Grade	-3	-2	-1	-09	-08	Units
Description	**Symbol**	**Device**	**Min**	**Min**	**Min**	**Min**	**Min**	
Input Setup and Hold Times								
No Delay		XC4002XL	2.8 / 1.5	2.5 / 1.3	2.2 / 1.2	1.9 / 1.0		ns
Global Early Clock and IFF	T_{PSEN}/T_{PHEN}	XC4005XL	1.2 / 4.1	1.1 / 3.6	0.9 / 3.1	0.8 / 2.7		ns
Global Early Clock and	T_{PFSEN}/T_{PFHEN}	XC4010XL	1.2 / 4.4	1.1 / 3.8	0.9 / 3.3	0.8 / 2.9		ns
FCL		XC4013XL	1.2 / 4.7	1.1 / 4.1	0.9 / 3.6	0.8 / 3.1	0.5 / 2.7	ns
		XC4020XL	1.2 / 4.6	1.1 / 4.0	0.9 / 3.5	0.8 / 3.0		ns
		XC4028XL	1.2 / 5.3	1.1 / 4.6	0.9 / 4.0	0.8 / 3.5		ns
		XC4036XL	1.2 / 6.7	1.1 / 5.8	0.9 / 5.1	0.8 / 4.4	0.5 / 3.7	ns
		XC4044XL	1.2 / 6.5	1.1 / 5.7	0.9 / 4.9	0.8 / 4.3		ns
		XC4052XL	1.2 / 6.7	1.1 / 5.8	0.9 / 5.1	0.8 / 4.4		ns
		XC4062XL	1.2 / 8.4	1.1 / 7.3	0.9 / 6.3	0.8 / 5.5	0.5 / 4.7	ns
		XC4085XL	1.2 / 8.7	1.1 / 7.5	0.9 / 6.6	0.8 / 5.7		ns
Partial Delay		XC4002XL	8.1 / 0.9	7.0 / 0.8	6.1 / 0.7	5.3 / 0.6		ns
Global Early Clock and IFF	T_{PSEP}/T_{PHEP}	XC4005XL	9.0 / 0.0	8.5 / 0.0	8.0 / 0.0	7.5 / 0.0		ns
Global Early Clock and	T_{PFSEP}/T_{PFHEP}	XC4010XL	11.9 / 0.0	10.4 / 0.0	9.0 / 0.0	8.0 / 0.0		ns
FCL		XC4013XL*	6.4 / 0.0	5.9 / 0.0	5.4 / 0.0	4.9 / 0.0	4.4 / 0.0	ns
		XC4020XL	10.8 / 0.0	10.3 / 0.0	9.8 / 0.0	9.0 / 0.0		ns
		XC4028XL	14.0 / 0.0	12.2 / 0.0	10.6 / 0.0	9.8 / 0.0		ns
		XC4036XL*	7.0 / 0.0	6.6 / 0.0	6.2 / 0.0	5.2 / 0.0	4.7 / 0.0	ns
		XC4044XL	14.6 / 0.0	12.7 / 0.0	11.0 / 0.0	10.8 / 0.0		ns
		XC4052XL	16.4 / 0.0	14.3 / 0.0	12.4 / 0.0	11.4 / 0.0		ns
		XC4062XL*	9.0 / 0.8	8.6 / 0.8	8.2 / 0.8	7.0 / 0.8	6.3 / 0.5	ns
		XC4085XL	16.7 / 0.0	14.5 / 0.0	12.6 / 0.0	11.6 / 0.0		ns
Full Delay		XC4002XL	6.7 / 0.0	5.8 / 0.0	5.1 / 0.0	4.4 / 0.0		ns
Global Early Clock and IFF	T_{PSED}/T_{PHED}	XC4005XL	10.8 / 0.0	9.4 / 0.0	8.2 / 0.0	7.1 / 0.0		ns
		XC4010XL	10.3 / 0.0	9.0 / 0.0	7.8 / 0.0	6.8 / 0.0		ns
		XC4013XL*	10.0 / 0.0	8.7 / 0.0	7.6 / 0.0	6.6 / 0.0	6.0 / 0.0	ns
		XC4020XL	12.0 / 0.0	10.4 / 0.0	9.1 / 0.0	7.9 / 0.0		ns
		XC4028XL	12.6 / 0.0	11.0 / 0.0	9.5 / 0.0	8.3 / 0.0		ns
		XC4036XL*	12.2 / 0.0	10.6 / 0.0	9.2 / 0.0	8.0 / 0.0	7.2 / 0.0	ns
		XC4044XL	13.8 / 0.0	12.0 / 0.0	10.5 / 0.0	9.1 / 0.0		ns
		XC4052XL	14.1 / 0.0	12.3 / 0.0	10.7 / 0.0	9.3 / 0.0		ns
		XC4062XL*	13.1 / 0.0	11.4 / 0.0	9.9 / 0.0	8.6 / 0.0	7.8 / 0.0	ns
		XC4085XL	17.9 / 0.0	15.6 / 0.0	13.6 / 0.0	11.8 / 0.0		ns

IFF = Input Flip-Flop or Latch, FCL = Fast Capture Latch
* The XC4013XL, XC4036XL, and 4062XL have significantly faster partial and full delay setup times than other devices.
Notes: Input setup time is measured with the fastest route and the lightest load.
Input hold time is measured using the furthest distance and a reference load of one clock pin per IOB as well as driving all accessible CLB flip-flops. For designs with a smaller number of clock loads, the pad-to-IOB clock pin delay as determined by the static timing analyzer (TRCE) can be used as a worst-case pin-to-pin no-delay input hold specification.

Global Early Clock BUFGEs 3, 4, 7, and 8 Set-up and Hold for IFF and FCL

		Speed Grade	-3	-2	-1	-09	-08	Units
Description	**Symbol**	**Device**	**Min**	**Min**	**Min**	**Min**	**Min**	
Input Setup & Hold Times								
No Delay		XC4002XL	3.0 / 2.0	2.6 / 1.7	2.3 / 1.5	2.0 / 1.3		ns
Global Early Clock and	T_{PSEN}/T_{PHEN}	XC4005XL	1.2 / 4.1	1.1 / 3.6	0.9 / 3.1	0.8 / 2.7		ns
IFF	T_{PFSEN}/T_{PFHEN}	XC4010XL	1.2 / 4.4	1.1 / 3.8	0.9 / 3.3	0.8 / 2.9		ns
Global Early Clock and		XC4013XL	1.2 / 4.7	1.1 / 4.1	0.9 / 3.6	0.8 / 3.1	0.5 / 2.7	ns
FCL		XC4020XL	1.2 / 4.6	1.1 / 4.0	0.9 / 3.5	0.8 / 3.0		ns
		XC4028XL	1.2 / 5.3	1.1 / 4.6	0.9 / 4.0	0.8 / 3.5		ns
		XC4036XL	1.2 / 6.7	1.1 / 5.8	0.9 / 5.1	0.8 / 4.4	0.5 / 3.7	ns
		XC4044XL	1.2 / 6.5	1.1 / 5.7	0.9 / 4.9	0.8 / 4.3		ns
		XC4052XL	1.2 / 6.7	1.1 / 5.8	0.9 / 5.1	0.8 / 4.4		ns
		XC4062XL	1.2 / 8.4	1.1 / 7.3	0.9 / 6.3	0.8 / 5.5	0.5 / 4.7	ns
		XC4085XL	1.2 / 8.7	1.1 / 7.5	0.9 / 6.6	0.8 / 5.7		ns
Partial Delay		XC4002XL	7.3 / 1.5	6.4 / 1.3	5.5 / 1.2	4.8 / 1.0		ns
Global Early Clock and	T_{PSEP}/T_{PHEP}	XC4005XL	8.4 / 0.0	7.9 / 0.0	7.4 / 0.0	7.2 / 0.0		ns
IFF	T_{PFSEP}/T_{PFHEP}	XC4010XL	10.3 / 0.0	9.0 / 0.0	7.8 / 0.0	7.4 / 0.0		ns
Global Early Clock and		XC4013XL*	5.4 / 0.0	4.9 / 0.0	4.4 / 0.0	4.3 / 0.0	4.0 / 0.0	ns
FCL		XC4020XL	9.8 / 0.0	9.3 / 0.0	8.8 / 0.0	8.5 / 0.0		ns
		XC4028XL	12.7 / 0.0	11.0 / 0.0	9.6 / 0.0	9.3 / 0.0		ns
		XC4036XL*	6.4 / 0.8	5.9 / 0.8	5.4 / 0.8	5.0 / 0.8	4.6 / 0.2	ns
		XC4044XL	13.8 / 0.0	12.0 / 0.0	10.4 / 0.0	10.2 / 0.0		ns
		XC4052XL	14.5 / 0.0	12.7 / 0.0	11.0 / 0.0	10.7 / 0.0		ns
		XC4062XL*	8.4 / 1.5	7.9 / 1.5	7.4 / 1.5	6.8 / 1.5	6.2 / 0.0	ns
		XC4085XL	14.5 / 0.0	12.7 / 0.0	11.0 / 0.0	10.8 / 0.0		ns
Full Delay		XC4002XL	5.9 / 0.0	5.2 / 0.0	4.5 / 0.0	3.9 / 0.0		ns
Global Early Clock and	T_{PSED}/T_{PHED}	XC4005XL	10.8 / 0.0	9.4 / 0.0	8.2 / 0.0	7.1 / 0.0		ns
IFF		XC4010XL	10.3 / 0.0	9.0 / 0.0	7.8 / 0.0	6.8 / 0.0		ns
		XC4013XL*	10.0 / 0.0	8.7 / 0.0	7.6 / 0.0	6.6 / 0.0	6.0 / 0.0	ns
		XC4020XL	12.0 / 0.0	10.4 / 0.0	9.1 / 0.0	7.9 / 0.0		ns
		XC4028XL	12.6 / 0.0	11.0 / 0.0	9.5 / 0.0	8.3 / 0.0		ns
		XC4036XL*	12.2 / 0.0	10.6 / 0.0	9.2 / 0.0	8.0 / 0.0	7.2 / 0.0	ns
		XC4044XL	13.8 / 0.0	12.0 / 0.0	10.5 / 0.0	9.1 / 0.0		ns
		XC4052XL	14.1 / 0.0	12.3 / 0.0	10.7 / 0.0	9.3 / 0.0		ns
		XC4062XL*	13.1 / 0.0	11.4 / 0.0	9.9 / 0.0	8.6 / 0.0	7.8 / 0.0	ns
		XC4085XL	17.9 / 0.0	15.6 / 0.0	13.6 / 0.0	11.8 / 0.0		ns

* The XC4013XL, XC4036XL, and 4062XL have significantly faster partial and full delay setup times than other devices.
IFF = Input Flip Flop or Latch. FCL = Fast Capture Latch
Notes: Input setup time is measured with the fastest route and the lightest load.
Input hold time is measured using the furthest distance and a reference load of one clock pin per IOB as well as driving all accessible CLB flip-flops. For designs with a smaller number of clock loads, the pad-to-IOB clock pin delay as determined by the static timing analyzer (TRCE) can be used as a worst-case pin-to-pin no-delay input hold specification.

XC4000XL IOB Input Switching Characteristic Guidelines

Testing of switching parameters is modeled after testing methods specified by MIL-M-38510/605. All devices are 100% functionally tested. Internal timing parameters are derived from measuring internal test patterns. Listed below are representative values. For more specific, more precise, and worst-case guaranteed data, use the values reported by the static timing analyzer (TRCE in the Xilinx Development System) and back-annotated to the simulation netlist. These path delays, provided as a guideline, have been extracted from the static timing analyzer report. All timing parameters assume worst-case operating conditions (supply voltage and junction temperature).

		Speed Grade	-3	-2	-1	-09	-08	Units
Description	**Symbol**	**Device**	**Min**	**Min**	**Min**	**Min**	**Min**	
Clocks								
Clock Enable (EC) to Clock (IK)	T_{ECIK}	All devices	0.1	0.1	0.1	0.1	0.1	ns
Delay from FCL enable (OK) active edge to IFF clock (IK) active edge	T_{OKIK}	XC4002XL	3.0	2.7	2.3	2.3		ns
		XC4013, 36, 62XL	2.2	1.9	1.6	1.6	1.6	ns
		Balance of Family	2.2	1.9	1.6	1.6		ns
Setup Times								
Pad to Clock (IK), no delay	T_{PICK}	XC4002XL	2.6	2.3	2.0	2.0		ns
		XC4013, 36, 62XL	1.7	1.5	1.3	1.3	1.2	ns
		Balance of Family	1.7	1.5	1.3	1.3		ns
Pad to Clock (IK), via transparent Fast Capture Latch, no delay	T_{PICKF}	XC4002XL	3.2	2.9	2.5	2.4		ns
		XC4013, 36, 62XL	2.3	2.0	1.8	1.7	1.6	ns
		Balance of Family	2.3	2.0	1.8	1.7		ns
Pad to Fast Capture Latch Enable (OK), no delay	T_{POCK}	XC4013, 36, 62XL	1.2	1.0	0.9	0.9	0.9	ns
		Balance of Family	1.2	1.0	0.9	0.9		ns
Hold Times								
All Hold Times		All Devices	0	0	0	0	0	
Global Set/Reset								
Minimum GSR Pulse Width	T_{MRW}	All devices	19.8	17.3	15.0	14.0	14.0	ns
Global Set/Reset			Max	Max	Max	Max	Max	
Delay from GSR input to any Q	T_{RRI*}	XC4002XL	9.8	8.5	7.4	7.0		ns
		XC4005XL	11.3	9.8	8.5	8.1		ns
		XC4010XL	13.9	12.1	10.5	10.0		ns
		XC4013XL	15.9	13.8	12.0	11.4	10.9	ns
		XC4020XL	18.6	16.1	14.0	13.3		ns
		XC4028XL	20.5	17.9	15.5	14.3		ns
		XC4036XL	22.5	19.6	17.0	16.2	16.2	ns
		XC4044XL	25.1	21.9	19.0	18.1		ns
		XC4052XL	27.2	23.6	20.5	19.5		ns
		XC4062XL	29.1	25.3	22.0	20.9	20.4	ns
		XC4085XL	34.4	29.9	26.0	24.7		ns
Propagation Delays								
Pad to I1, I2	T_{PID}	All devices	1.6	1.4	1.2	1.1	1.0	ns
Pad to I1, I2 via transparent input latch, no delay	T_{PLI}	XC4002XL	4.7	4.2	3.6	3.5		ns
		XC4013, 36, 62XL	3.1	2.7	2.4	2.2	2.1	ns
		Balance of Family	3.1	2.7	2.4	2.2		ns
Pad to I1, I2 via transparent FCL and input latch, no delay	T_{PFLI}	X4002XL	5.4	4.7	4.1	3.9		ns
		XC4013, 36, 62XL	3.7	3.3	2.8	2.7	2.5	ns
		Balance of Family	3.7	3.3	2.8	2.7		ns
Clock (IK) to I1, I2 (flip-flop)	T_{IKRI}	All devices	1.7	1.5	1.3	1.2	1.2	ns
Clock (IK) to I1, I2 (latch enable, active Low)	T_{IKLI}	All devices	1.8	1.6	1.4	1.3	1.3	ns
FCL Enable (OK) active edge to I1, I2 (via transparent standard input latch)	T_{OKLI}	XC4002XL	5.2	4.6	4.0	3.8		ns
		XC4013, 36, 62XL	3.6	3.1	2.7	2.6	2.5	ns
		Balance of Family	3.6	3.1	2.7	2.6		ns

IFF = Input Flip-Flop or Latch, FCL = Fast Capture Latch
* Indicates Minimum Amount of Time to Assure Valid Data.

XC4000XL IOB Output Switching Characteristic Guidelines

Testing of switching parameters is modeled after testing methods specified by MIL-M-38510/605. All devices are 100% functionally tested. Internal timing parameters are derived from measuring internal test patterns. Listed below are representative values. For more specific, more precise, and worst-case guaranteed data, use the values reported by the static timing analyzer (TRCE in the Xilinx Development System) and back-annotated to the simulation netlist. These path delays, provided as a guideline, have been extracted from the static timing analyzer report. All timing parameters assume worst-case operating conditions (supply voltage and junction temperature). For Propagation Delays, slew-rate = fast unless otherwise noted. Values are expressed in nanoseconds unless otherwise noted.

		-3		-2		-1		-09		-08	
Description	**Symbol**	**Min**	**Max**	**Min**	**Max**	**Min**	**Max**	**Min**	**Max**	**Min**	**Max**
Clocks											
Clock High	T_{CH}	3.0		2.8		2.5		2.3		2.1	
Clock Low	T_{CL}	3.0		2.8		2.5		2.3		2.1	
Propagation Delays											
Clock (OK) to Pad	T_{OKPOF}		5.0		4.3		3.8		3.5		3.3
Output (O) to Pad	T_{OPF}		4.1		3.6		3.1		3.0		2.8
3-state to Pad hi-Z (slew-rate independent)	T_{TSHZ}		4.0		3.5		3.0		2.9		2.9
3-state to Pad active and valid	T_{TSONF}		4.4		3.8		3.3		3.3		3.3
Output (O) to Pad via Fast Output MUX	T_{OFPF}		5.5		4.8		4.2		4.0		3.7
Select (OK) to Pad via Fast MUX	T_{OKFPF}		5.1		4.5		3.9		3.7		3.4
Setup and Hold Times											
Output (O) to clock (OK) setup time	T_{OOK}	0.5		0.4		0.3		0.3		0.3	
Output (O) to clock (OK) hold time	T_{OKO}	0.0		0.0		0.0		0.0		0.0	
Clock Enable (EC) to clock (OK) setup time	T_{ECOK}	0.0		0.0		0.0		0.0		0.0	
Clock Enable (EC) to clock (OK) hold time	T_{OKEC}	0.3		0.2		0.1		0.0		0.0	
Global Set/Reset											
Minimum GSR pulse width	T_{MRW}	19.8		17.3		15.0		14.0		14.0	
Delay from GSR input to any Pad	T_{RPO}*										
XC4002XL			14.3		12.5		10.9		10.3		
XC4005XL			15.9		13.8		12.0		11.4		
XC4010XL			18.5		16.1		14.0		13.3		
XC4013XL			20.5		17.8		15.5		14.7		14.0
XC4020XL			23.2		20.1		17.5		16.6		
XC4028XL			25.1		21.9		19.0		17.6		
XC4036XL			27.1		23.6		20.5		19.4		19.3
XC4044XL			29.7		25.9		22.5		21.4		
XC4052XL			31.7		27.6		24.0		22.8		
XC4062XL			33.7		29.3		25.5		24.2		23.5
XC4085XL			39.0		33.9		29.5		28.0		
Slew Rate Adjustment											
For output SLOW option add	T_{SLOW}		3.0		2.5		2.0		1.7		1.6

Note: Output timing is measured at ~50% V_{CC} threshold, with 50 pF external capacitive loads.
* Indicates Minimum Amount of Time to Assure Valid Data.

Revision Control

Version	Nature of Changes
02/01/1999 (1.5)	Release included in the 1999 data book, section 6
05/14/1999 (1.6)	Replaced Electrical Specification and pinout pages for E, EX, and XL families with separate updates and added URL link on placeholder page for electrical specifications/pinouts for WebLINX users
09/30/1999 (1.7)	Added Power-on specification.
10/18/1999 (1.8)	Corrected posted file to include missing page (IOB Output Parameters).
03/01/2013 (2.0)	The products listed in this data sheet are obsolete. See XCN08011 for further information.

Looking for pricing, stock, or lifecycle information?

Click below to explore more details on WIN SOURCE:

- View XC4028XL-09BG352C on WIN SOURCE
- Xilinx Inc. Information

Optimize Your Supply Chain with WIN SOURCE Solutions

- Global Sourcing Solution
- Obsolete Management
- Cost Control Management
- Shortage Management
- Alternative Solution
- Excess Inventory Management