THE DATASHEET OF

RFPIC12F675FT-I/SS

www.win-source.net 0086-755-83957316

MAXLINEAR

SP3232EH

3.3V, 460 kbps RS-232 Transceiver

FEATURES

- Meets true EIA/TIA-232-F Standards from a +3.0V to +5.5V power supply
- Interoperable with RS-232 down to a +2.7V power source
- Enhanced ESD Specifications:
  - ±15kV Human Body Model
  - ±15kV IEC61000-4-2 Air Discharge
  - ±8kV IEC61000-4-2 Contact Discharge
- 460kbps Minimum Transmission Rate
- Ideal for Handheld, Battery Operated Applications

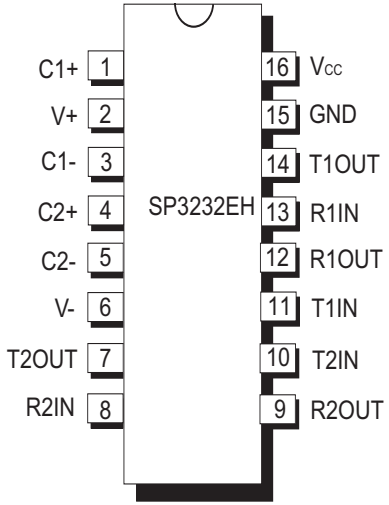

Now Available in Lead Free Packaging

DESCRIPTION

The **SP3232EH** is a 2 driver / 2 receiver RS-232 transceiver solution intended for portable or hand-held applications such as notebook or laptop computers. The data transmission rate of 460kbps can meet the demands of high speed RS-232 applications. This device has a high-efficiency, charge-pump power supply that requires only 0.1µF capacitors in 3.3V operation. This charge pump allows the **SP3232EH** device to deliver true RS-232 performance from a single power supply ranging from +3.0V to +5.5V. The ESD tolerance of the **SP3232EH** device exceeds +/-15kV for both Human Body Model and IEC61000-4-2 Air discharge test methods.

SELECTION TABLE

Device	Power Supplies	RS-232 Drivers	RS-232 Receivers	External Components	Shutdown	TTL 3-State	# of Pins
SP3232EH	+3.0V to +5.5V	2	2	4	No	No	16

ABSOLUTE MAXIMUM RATINGS

These are stress ratings only and functional operation of the device at these ratings or any other above those indicated in the operation sections of the specifications below is not implied. Exposure to absolute maximum rating conditions for extended periods of time may affect reliability and cause permanent damage to the device.

V_{CC}.....-0.3V to +6.0V
V+ (NOTE 1).....-0.3V to +7.0V
V- (NOTE 1).....+0.3V to -7.0V
V+ + |V-| (NOTE 1).....+13V
I_{CC} (DC V_{CC} or GND current).....±100mA

Input Voltages
TxIN, ...-0.3V to +6.0V
RxIN.....±15V
Output Voltages
TxOUT.....±13.2V
RxOUT, ...-0.3V to (V_{CC} +0.3V)
Short-Circuit Duration
TxOUT.....Continuous

Storage Temperature.....-65°C to +150°C

Power Dissipation per package
16-pin SSOP (derate 9.69mW/°C above +70°C).....775mW
16-pin PDIP (derate 14.3mW/°C above +70°C).....1150mW
16-pin Wide SOIC (derate 11.2mW/°C above +70°C).....900mW
16-pin TSSOP (derate 10.5mW/°C above +70°C).....850mW

NOTE 1: V+ and V- can have maximum magnitudes of 7V, but their absolute difference cannot exceed 13V.

ELECTRICAL CHARACTERISTICS

Unless otherwise noted, the following specifications apply for V_{CC} = +3.0V to +5.5V with T_{AMB} = T_{MIN} to T_{MAX}

PARAMETER	MIN.	TYP.	MAX.	UNITS	CONDITIONS
DC CHARACTERISTICS					
Supply Current		0.3	1.0	mA	no load, V_{CC} = 3.3V, T_{AMB} = 25°C, TxIN = GND or V_{CC}
LOGIC INPUTS AND RECEIVER OUTPUTS					
Input Logic Threshold LOW	GND		0.8	V	TxIN
Input Logic Threshold HIGH	2.0		Vcc	V	Vcc = 3.3V
Input Logic Threshold HIGH	2.4		Vcc	V	Vcc = 5.0V
Input Leakage Current		±0.01	±1.0	µA	TxIN, T_{AMB} = +25°C
Output Voltage LOW			0.4	V	I_{OUT} = 1.6mA
Output Voltage HIGH	V_{CC} -0.6	V_{CC} -0.1		V	I_{OUT} = -1.0mA
DRIVER OUTPUTS					
Output Voltage Swing	±5.0	±5.4		V	All driver outputs loaded with 3kΩ to GND, T_{AMB} = +25°C

Unless otherwise noted, the following specifications apply for V_{CC} = +3.0V to +5.5V with T_{AMB} = T_{MIN} to T_{MAX}

PARAMETER	MIN.	TYP.	MAX.	UNITS	CONDITIONS
DRIVER OUTPUTS (continued)					
Output Resistance	300			Ω	V_{CC} = V+ = V- = 0V, V_{OUT}=±2V
Output Short-Circuit Current		±35	±60	mA	V_{OUT} = 0V
Output Leakage Current			±25	µA	V_{CC} = 0V, V_{OUT} = ±12V
RECEIVER INPUTS					
Input Voltage Range	-15		15	V	
Input Threshold LOW	0.6	1.2		V	Vcc = 3.3V
Input Threshold LOW	0.8	1.5		V	Vcc = 5.0V
Input Threshold HIGH		1.5	2.4	V	Vcc = 3.3V
Input Threshold HIGH		1.8	2.4	V	Vcc = 5.0V
Input Hysteresis		0.3		V	
Input Resistance	3	5	7	kΩ	
TIMING CHARACTERISTICS					
Maximum Data Rate	460			kbps	R_L = 3kΩ, C_L = 1000pF, one driver switching
Driver Propagation Delay, t_{PHL}		1.0		µs	R_L = 3kΩ, C_L = 1000pF
Driver Propagation Delay, t_{PLH}		1.0		µs	R_L = 3kΩ, C_L = 1000pF
Receiver Propagation Delay, t_{PHL}		0.3		µs	Receiver input to Receiver output, C_L = 150pF
Receiver Propagation Delay, t_{PLH}		0.3		µs	Receiver input to Receiver output, C_L = 150pF
Receiver Output Enable Time		200		ns	
Receiver Output Disable Time		200		ns	
Driver Skew		100	500	ns	$\lvert t_{PHL} - t_{PLH} \rvert$
Receiver Skew		200	1000	ns	$\lvert t_{PHL} - t_{PLH} \rvert$
Transition-Region Slew Rate		60		V/µs	Vcc = 3.3V, R_L = 3kΩ, C_L = 150pF, T_{AMB} = 25°C, measurements taken from -3.0V to +3.0V or +3.0V to -3.0V

TYPICAL PERFORMANCE CHARACTERISTICS

Unless otherwise noted, the following performance characteristics apply for V_{CC} = +3.3V, 460kbps data rate, all drivers loaded with 3kΩ, 0.1µF charge pump capacitors, and T_{AMB} = +25°C.

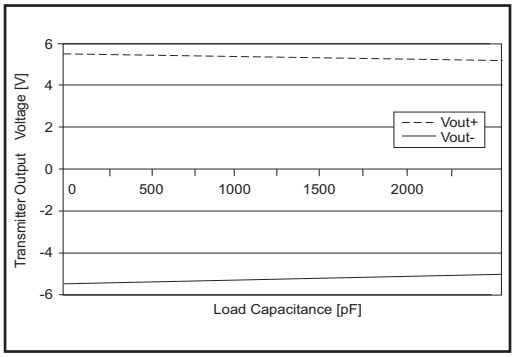

Figure 1. Transmitter Output Voltage vs Load Capacitance

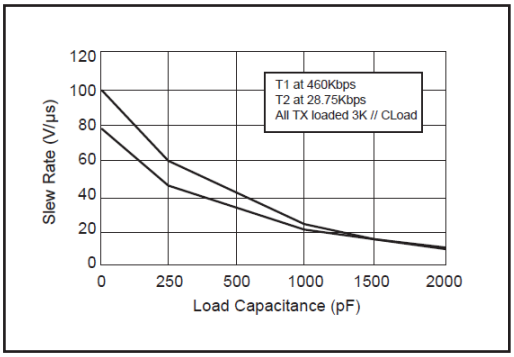

Figure 2. Slew Rate vs Load Capacitance

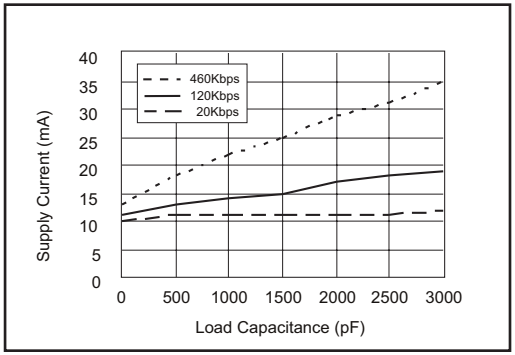

Figure 3. Supply Current VS. Load Capacitance when Transmitting Data

NAME	FUNCTION	PIN NUMBER
		SP3232EH
C1+	Positive terminal of the voltage doubler charge-pump capacitor	1
V+	+5.5V output generated by the charge pump	2
C1-	Negative terminal of the voltage doubler charge-pump capacitor	3
C2+	Positive terminal of the inverting charge-pump capacitor	4
C2-	Negative terminal of the inverting charge-pump capacitor	5
V-	-5.5V output generated by the charge pump	6
T_1OUT	RS-232 driver output.	14
T_2OUT	RS-232 driver output.	7
R_1IN	RS-232 receiver input	13
R_2IN	RS-232 receiver input	8
R_1OUT	TTL/CMOS receiver output	12
R_2OUT	TTL/CMOS receiver output	9
T_1IN	TTL/CMOS driver input	11
T_2IN	TTL/CMOS driver input	10
GND	Ground.	15
V_{CC}	+3.0V to +5.5V supply voltage	16

Table 1. Device Pin Description

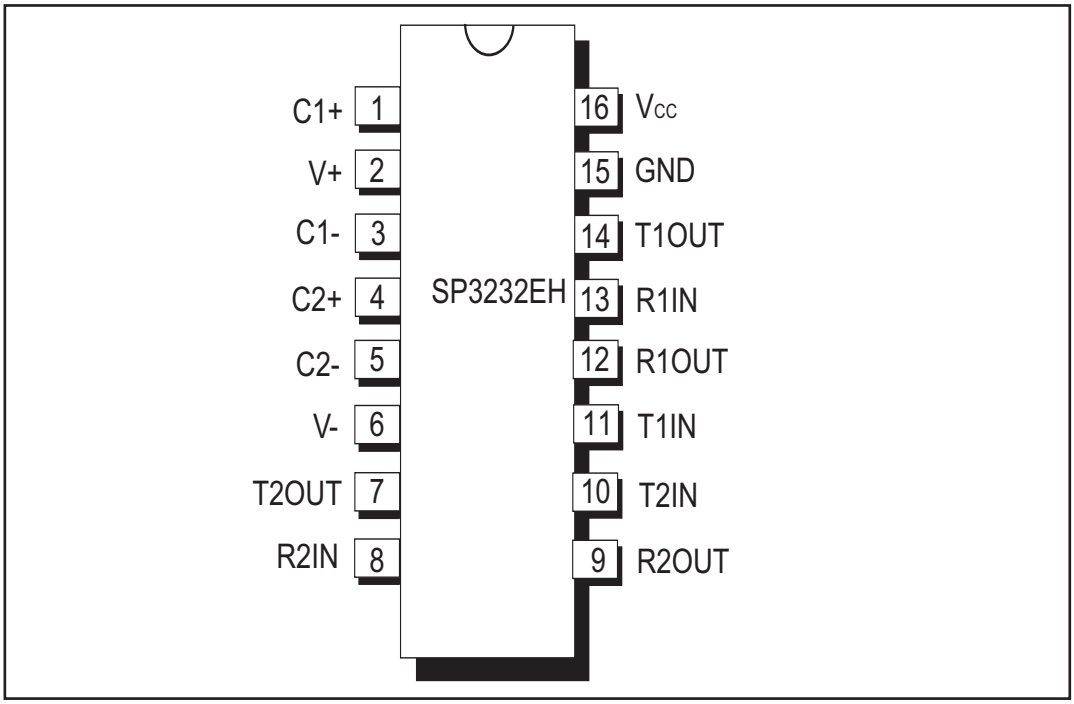

Figure 4. Pinout Configuration for the SP3232EH

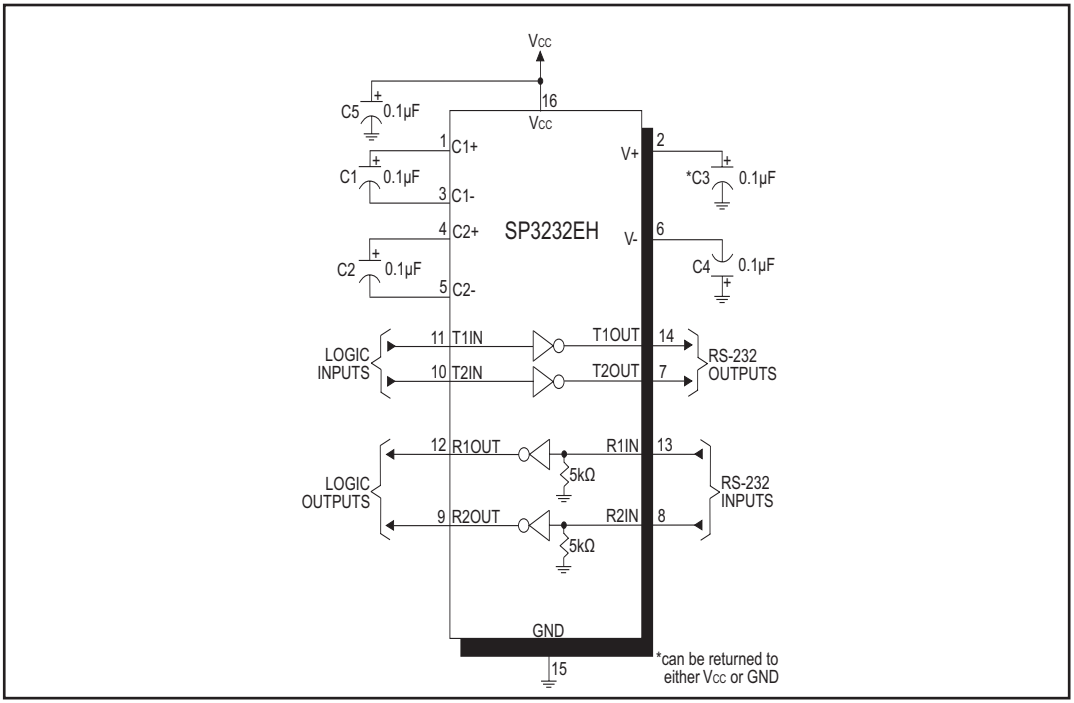

Figure 5. SP3232EH Typical Operating Circuit

The **SP3232EH** is a 2-driver / 2-receiver devices ideal for portable or hand-held applications. The **SP3232EH** transceiver meets the EIA/TIA-232 and ITU-T V.28/V.24 communication protocols and can be implemented in battery-powered, portable, or hand-held applications such as notebook or palmtop computers. The **SP3232EH** device features **Exar's** proprietary on-board charge pump circuitry that generates ±5.5V for RS-232 voltage levels from a single +3.0V to +5.5V power supply. This device is ideal for +3.3V-only systems, mixed +3.3V to +5.5V systems, or +5.0V-only systems that require true RS-232 performance. The **SP3232EH** device can operate at a minimum data rate of 460kbps when fully loaded.

THEORY OF OPERATION

The **SP3232EH** is made up of three basic circuit blocks:

1. Drivers
2. Receivers
3. The Exar proprietary charge pump

Drivers

The drivers are inverting level transmitters that convert TTL or CMOS logic levels to ±5.0V EIA/TIA-232 levels with an inverted sense relative to the input logic levels. Typically, the RS-232 output voltage swing is ±5.4V with no load and ±5V minimum fully loaded. The driver outputs are protected against infinite short-circuits to ground without degradation in reliability. Driver outputs will meet EIA/TIA-562 levels of +/-3.7V with supply voltages as low as 2.7V.

The drivers have a minimum data rate of 460kbps fully loaded with 3kΩ in parallel with 1000pF, ensuring compatibility with PC-to-PC communication software.

Figure 6 shows a loopback test circuit used to test the RS-232 Drivers. Figure 7 shows the test results of the loopback circuit with all drivers active at 120kbps with RS-232 loads in parallel with a 1000pF capacitor. Figure 8 shows the test results where one driver was active at 460kbps and all drivers loaded with an RS-232 receiver in parallel with 1000pF capacitor. Designers should connect unused inputs to Vcc or GND.

Receivers

The Receivers convert EIA/TIA-232 levels to TTL or CMOS logic output levels. Since receiver input is usually from a transmission line where long cable lengths and system interference can degrade the signal, the inputs have a typical hysteresis margin of 300mV. This ensures that the receiver is virtually immune to noisy transmission lines. Should an input be left unconnected, an internal 5kΩ pulldown resistor to ground will commit the output of the receiver to a HIGH state.

Charge Pump

The charge pump is an Exar-patended design (U.S. 5,306,954) and uses a unique approach compared to older less-efficient designs. The charge pump still requires four external capacitors, but uses a four-phase voltage shifting technique to attain symmetrical 5.5V power supplies. The internal power supply consists of a regulated dual charge pump that provides output voltages of +/-5.5V regardless of the input voltage (Vcc) over the +3.0V to +5.5V range.

In most circumstances, decoupling the power supply can be achieved adequately using a 0.1µF bypass capacitor at C5 (refer to figure 5)

In applications that are sensitive to power-supply noise, decouple Vcc to ground with a capacitor of the same value as charge-pump capacitor C1. Physically connect bypass capacitors as close to the IC as possible.

The charge pump operates in a discontinuous mode using an internal oscillator. If the output voltages are less than a magnitude

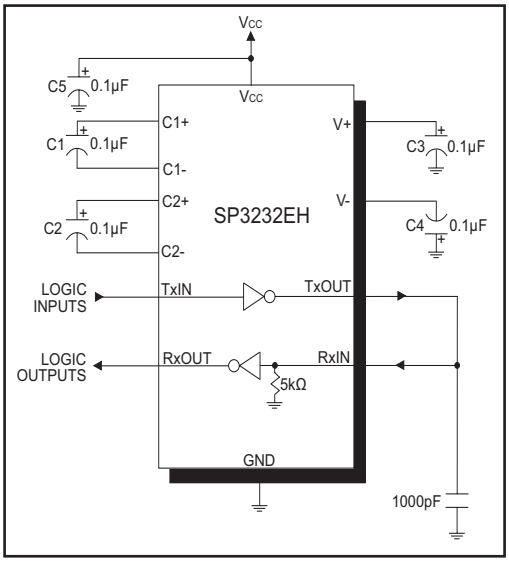

Figure 6. SP3232EH Driver Loopback Test Circuit

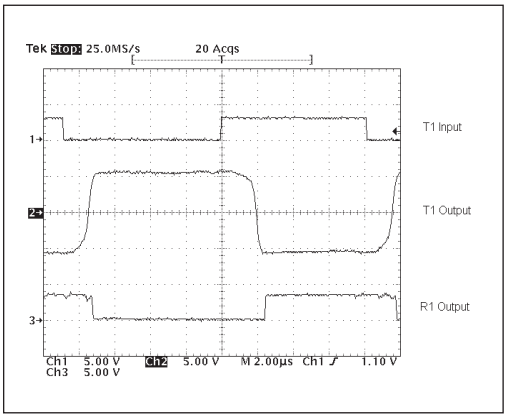

Figure 7. Loopback Test results at 120kbps

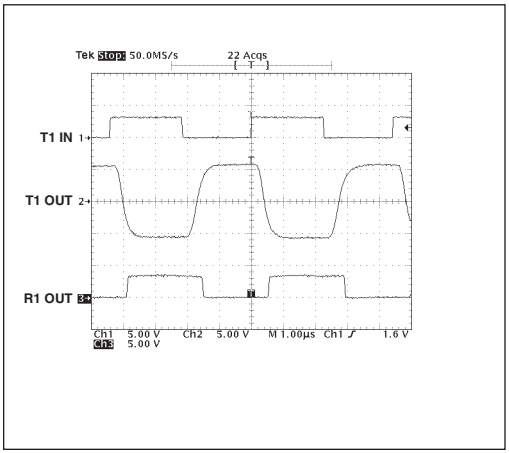

Figure 8. Loopback Test results at 460kbps

of 5.5V, the charge pump is enabled. If the output voltages exceed a magnitude of 5.5V, the charge pump is disabled. This oscillator controls the four phases of the voltage shifting. A description of each phase follows.

Phase 1

— V_{SS} charge storage — During this phase of the clock cycle, the positive side of capacitors C_1 and C_2 are initially charged to V_{CC}. C_1^+ is then switched to GND and the charge in C_1^- is transferred to C_2^-. Since C_2^+ is connected to V_{CC}, the voltage potential across capacitor C_2 is now 2 times V_{CC}.

Phase 2

— V_{SS} transfer — Phase two of the clock connects the negative terminal of C_2 to the V_{SS} storage capacitor and the positive terminal of C_2 to GND. This transfers a negative generated voltage to C_3. This generated voltage is regulated to a minimum voltage of -5.5V. Simultaneous with the transfer of the voltage to C_3, the positive side of capacitor C_1 is switched to V_{CC} and the negative side is connected to GND.

Phase 3

— V_{DD} charge storage — The third phase of the clock is identical to the first phase — the charge transferred in C_1 produces $-V_{CC}$ in the negative terminal of C_1, which is applied to the negative side of capacitor C_2. Since C_2^+ is at V_{CC}, the voltage potential across C_2 is 2 times V_{CC}.

Phase 4

— V_{DD} transfer — The fourth phase of the clock connects the negative terminal of C_2 to GND, and transfers this positive generated voltage across C_2 to C_4, the V_{DD} storage capacitor. This voltage is regulated to +5.5V. At this voltage, the internal oscillator is disabled. Simultaneous with the transfer of the voltage to C_4, the positive side of capacitor C_1 is switched to V_{CC} and the negative side is connected to GND, allowing the charge pump cycle to begin again. The charge pump cycle will continue as long as the operational conditions for the internal oscillator are present.

Since both V^+ and V^- are separately generated from V_{CC}, in a no–load condition V^+ and V^- will be symmetrical. Older charge pump approaches that generate V^- from V^+ will show a decrease in the magnitude of V^- compared to V^+ due to the inherent inefficiencies in the design.

The clock rate for the charge pump typically operates at greater than 250kHz. The external capacitors can be as low as 0.1µF with a 16V breakdown voltage rating.

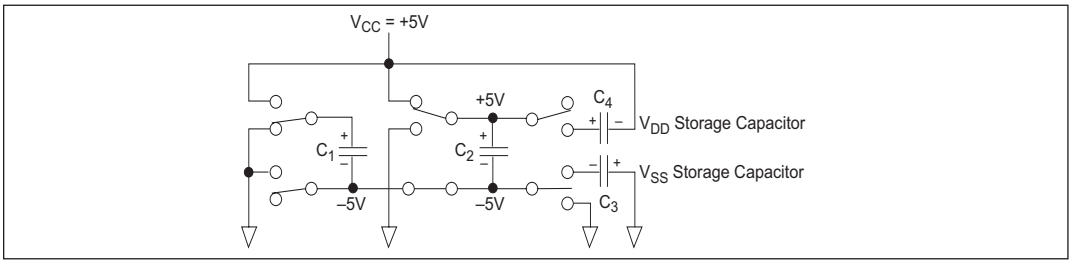

Figure 9. Charge Pump — Phase 1

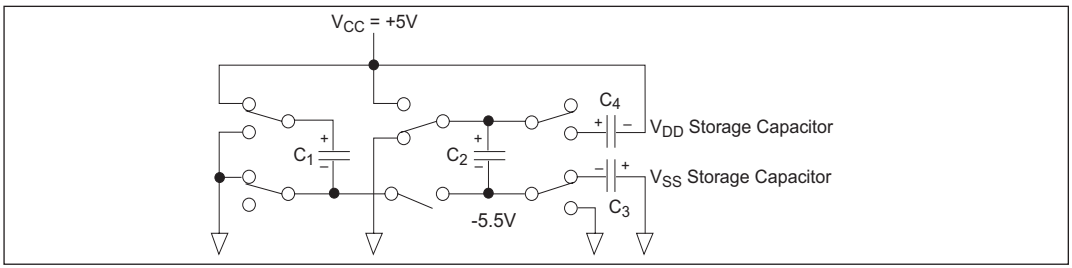

Figure 10. Charge Pump — Phase 2

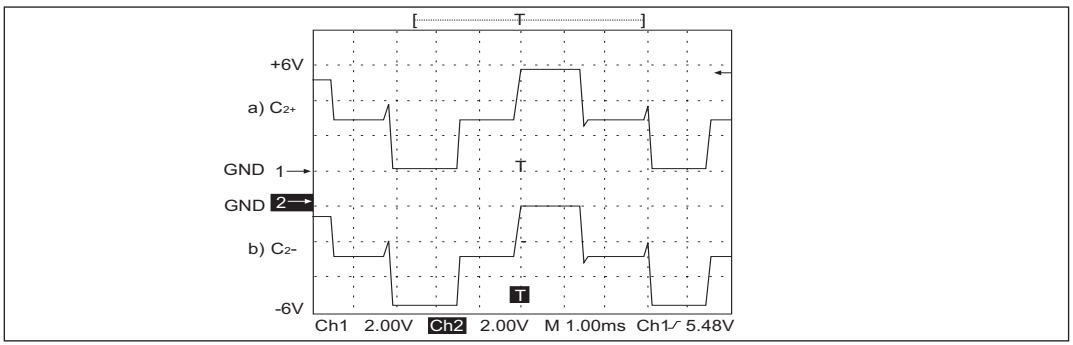

Figure 11. Charge Pump Waveforms

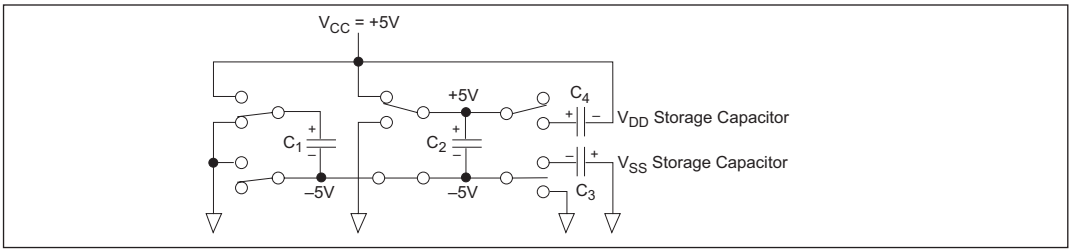

Figure 12. Charge Pump — Phase 3

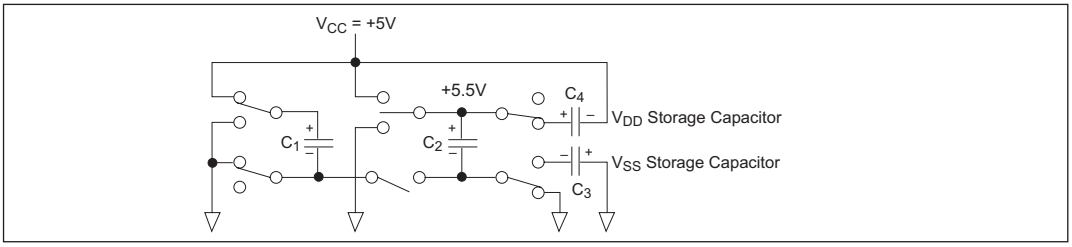

Figure 13. Charge Pump — Phase 4

ESD TOLERANCE

The **SP3232EH** device incorporates ruggedized ESD cells on all driver output and receiver input pins. The ESD structure is improved over our previous family for more rugged applications and environments sensitive to electro-static discharges and associated transients. The improved ESD tolerance is at least ±15kV without damage nor latch-up.

There are different methods of ESD testing applied:

a) MIL-STD-883, Method 3015.7
b) IEC61000-4-2 Air-Discharge
c) IEC61000-4-2 Direct Contact

The Human Body Model has been the generally accepted ESD testing method for semi-conductors. This method is also specified in MIL-STD-883, Method 3015.7 for ESD testing. The premise of this ESD test is to simulate the human body's potential to store electro-static energy and discharge it to an integrated circuit. The simulation is performed by using a test model as shown in Figure 14. This method will test the IC's capability to withstand an ESD transient during normal handling such as in manufacturing areas where the IC's tend to be handled frequently.

The IEC-61000-4-2, formerly IEC801-2, is generally used for testing ESD on equipment and systems. For system manufacturers, they must guarantee a certain amount of ESD protection since the system itself is exposed to the outside environment and human presence. The premise with IEC61000-4-2 is that the system is required to withstand an amount of static electricity when ESD is applied to points and surfaces of the equipment that are accessible to personnel during normal usage. The transceiver IC receives most of the ESD current when the ESD source is applied to the connector pins. The test circuit for IEC61000-4-2 is shown on Figure 15. There are two methods within IEC61000-4-2, the Air Discharge method and the Contact Discharge method.

With the Air Discharge Method, an ESD voltage is applied to the equipment under test (EUT) through air. This simulates an electrically charged person ready to connect a cable onto the rear of the system only to find an unpleasant zap just before the person touches the back panel. The high energy potential on the person discharges through an arcing path to the rear panel of the system before he or she even touches the system. This energy, whether discharged directly or through air, is predominantly a function of the discharge current rather than the discharge voltage. Variables with an air discharge such as approach speed of the object carrying the ESD potential to the system and humidity will tend to change the discharge current. For example, the rise time of the discharge current varies with the approach speed.

The Contact Discharge Method applies the ESD current directly to the EUT. This method was devised to reduce the unpredictability of the ESD arc. The discharge current rise time is constant since the energy is directly transferred without the air-gap arc. In situations such as hand held systems, the ESD charge can be directly discharged to the

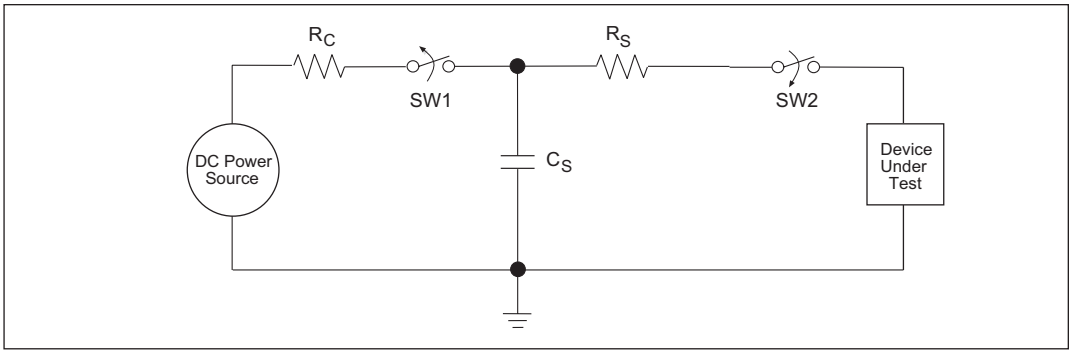

Figure 14. ESD Test Circuit for Human Body Model

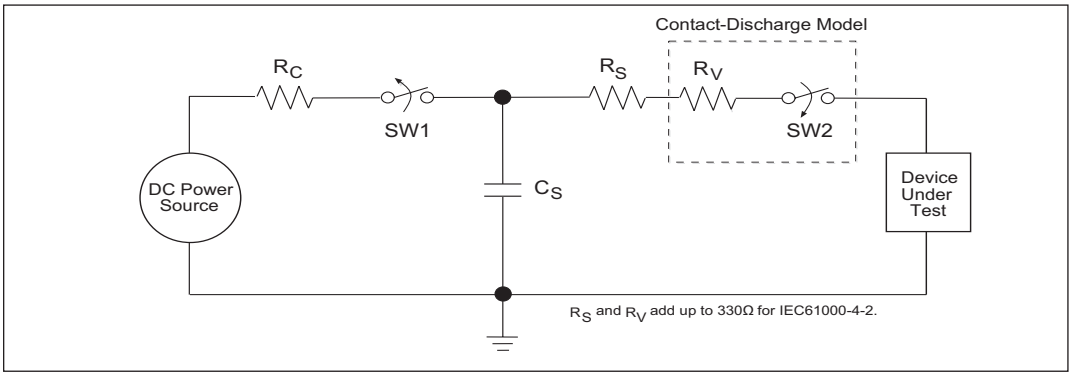

Figure 15. ESD Test Circuit for IEC61000-4-2

equipment from a person already holding the equipment. The current is transferred on to the keypad or the serial port of the equipment directly and then travels through the PCB and finally to the IC.

The circuit models in Figures 14 and 15 represent the typical ESD testing circuit used for all three methods. The C_S is initially charged with the DC power supply when the first switch (SW1) is on. Now that the capacitor is charged, the second switch (SW2) is on while SW1 switches off. The voltage stored in the capacitor is then applied through R_S, the current limiting resistor, onto the device under test (DUT). In ESD tests, the SW2 switch is pulsed so that the device under test receives a duration of voltage.

For the Human Body Model, the current limiting resistor (R_S) and the source capacitor (C_S) are 1.5kΩ an 100pF, respectively. For IEC-61000-4-2, the current limiting resistor (R_S) and the source capacitor (C_S) are 330Ω an 150pF, respectively.

The higher C_S value and lower R_S value in the IEC61000-4-2 model are more stringent than the Human Body Model. The larger storage capacitor injects a higher voltage to the test point when SW2 is switched on. The lower current limiting resistor increases the current charge onto the test point.

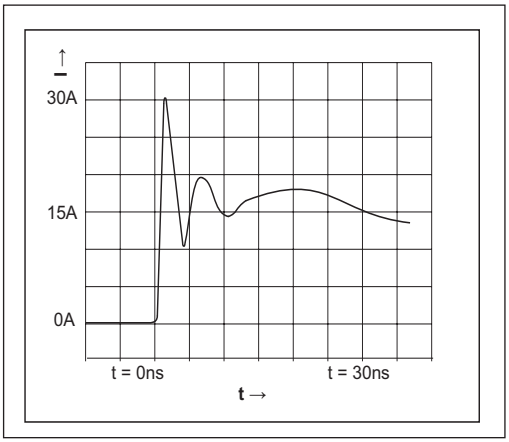

Figure 16. ESD Test Waveform for IEC61000-4-2

DEVICE PIN TESTED	HUMAN BODY MODEL	IEC61000-4-2		
		Air Discharge	Direct Contact	Level
Driver Outputs	±15kV	±15kV	±8kV	4
Receiver Inputs	±15kV	±15kV	±8kV	4

Table 2. Transceiver ESD Tolerance Levels

PACKAGE: 16 PIN TSSOP

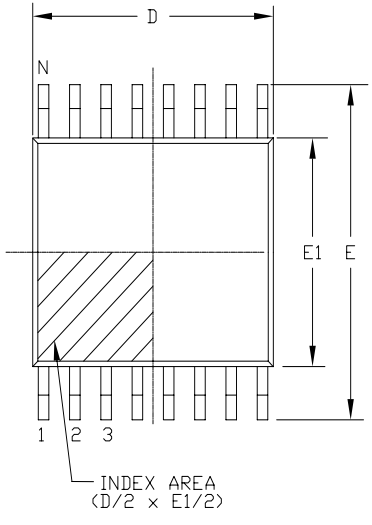

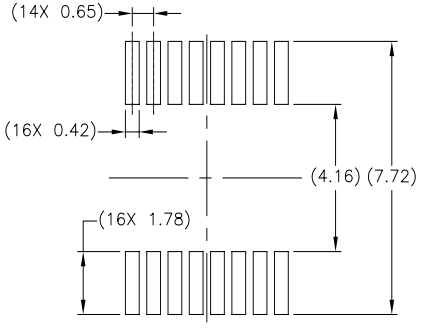

LAND PATTERN RECOMMENDATION

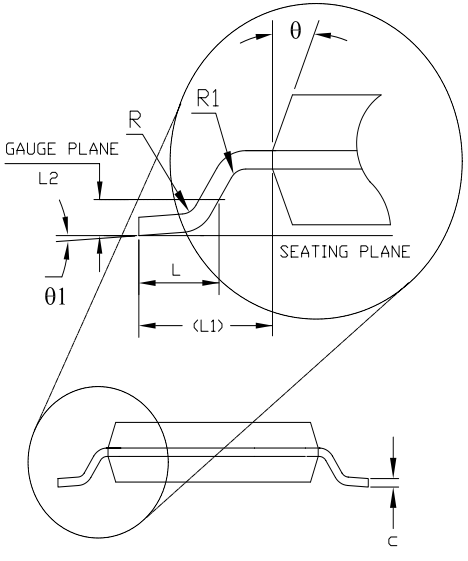

Front View

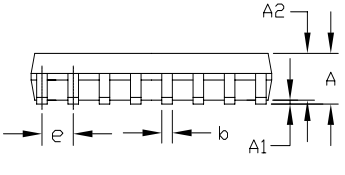

Side View

REVISION HISTORY			
REV.	DISCRIPTION	DATE	APP'D
A	DRAWING ORIGINATION	04/19/06	JL
B	ADD LAND PATTERN RECOMMENDATION	05/22/07	JL
C	CHANGE DRAWING LOGO AND COMPANY NAME	11/21/07	JL

16 Pin TSSOP JEDEC MO-153 Variation AB						
SYMBOLS	DIMENSIONS IN MM (Control Unit)			DIMENSIONS IN INCH (Reference Unit)		
	MIN	NOM	MAX	MIN	NOM	MAX
A	—	—	1.20	—	—	0.047
A1	0.05	—	0.15	0.002	—	0.006
A2	0.80	1.00	1.05	0.031	0.039	0.041
b	0.19	—	0.30	0.007	—	0.012
c	0.09	—	0.20	0.004	—	0.008
E	6.40 BSC			0.252 BSC		
E1	4.30	4.40	4.50	0.169	0.173	0.177
e	0.65 BSC			0.026 BSC		
L	0.45	0.60	0.75	0.018	0.024	0.030
L1	1.00 REF			0.039 REF		
L2	0.25 BSC			0.010 BSC		
R	0.09	—	—	0.035	—	—
R1	0.09	—	—	0.035	—	—
θ	12° REF			12° REF		
θ1	0°	—	8°	0°	—	8°
D	4.90	5.00	5.10	0.193	0.197	0.200
N	16			16		

EXAR Powering Connectivity	EXAR CORPORATION		
	16 PIN TSSOP PACKAGE OUTLINE		
Packaging Approval:		Drawing No:	16-PIN TSSOP
By: JL	Date: 11/21/07	Revision: C	Sheet: 1 OF 1

Part Number	Temp. Range	Package	Packaging Method	Lead-Free
SP3232EHCY-L/TR	0°C to +70°C	16 Pin TSSOP	Tape and Reel	Yes
SP3232EHEY-L/TR	-40°C to +85°C	16 Pin TSSOP	Tape and Reel	Yes

Notes: Forr most up-to-date Ordering Information and for additional information on environmental rating, go to www.maxlinear.com/SP3232EH.

REVISION HISTORY

DATE	REVISION	DESCRIPTION
01/18/06	--	Legacy Sipex Datasheet
01/06/11	1.0.0	Convert to Exar Format, Remove EOL device SP3222EH, update ordering information and change revision to 1.0.0.
06/07/11	1.0.1	Remove obsolete devices per PDN 110510-01.
03/14/13	1.0.2	Correct type error to RX input voltage ABS Maximum Rating and TX transition region slew rate condition.
03/19/20	1.0.3	Update to MaxLinear logo. Update Ordering Information.
Sept 30, 2021	1.0.4	**Updated:** • In the "Electrical Characteristics" table, C_L =1000pF replaced with C_L =150pF, for the "Transition-Region Slew Rate" parameter. • "Slew Rate vs Load Capacitance" figure.

Corporate Headquarters: 5966
La Place Court, Suite 100
Carlsbad, CA 92008
Tel.: +1 (760) 692-0711
Fax: +1 (760) 444-8598
www.maxlinear.com

The content of this document is furnished for informational use only, is subject to change without notice, and should not be construed as a commitment by MaxLinear, Inc. MaxLinear, Inc. assumes no responsibility or liability for any errors or inaccuracies that may appear in the informational content contained in this guide. Complying with all applicable copyright laws is the responsibility of the user. Without limiting the rights under copyright, no part of this document may be reproduced into, stored in, or introduced into a retrieval system, or transmitted in any form or by any means (electronic, mechanical, photocopying, recording, or otherwise), or for any purpose, without the express written permission of MaxLinear, Inc.

Maxlinear, Inc. does not recommend the use of any of its products in life support applications where the failure or malfunction of the product can reasonably be expected to cause failure of the life support system or to significantly affect its safety or effectiveness. Products are not authorized for use in such applications unless MaxLinear, Inc. receives, in writing, assurances to its satisfaction that: (a) the risk of injury or damage has been minimized; (b) the user assumes all such risks; (c) potential liability of MaxLinear, Inc. is adequately protected under the circumstances.

MaxLinear, Inc. may have patents, patent applications, trademarks, copyrights, or other intellectual property rights covering subject matter in this document. Except as expressly provided in any written license agreement from MaxLinear, Inc., the furnishing of this document does not give you any license to these patents, trademarks, copyrights, or other intellectual property.

MaxLinear, the MaxLinear logo, any MaxLinear trademarks (MxL, Full-Spectrum Capture, FSC, G.now, AirPHY, Puma, and AnyWAN), and the MaxLinear logo on the products sold are all property of MaxLinear, Inc. or one of MaxLinear's subsidiaries in the U.S.A. and other countries. All rights reserved. Other company trademarks and product names appearing herein are the property of their respective owners.

© 2021 MaxLinear, Inc. All rights reserved.

Looking for pricing, stock, or lifecycle information?

Click below to explore more details on WIN SOURCE:

- View RFPIC12F675FT-I/SS on WIN SOURCE
- Microchip Technology Information

Optimize Your Supply Chain with WIN SOURCE Solutions

- Global Sourcing Solution
- Obsolete Management
- Cost Control Management
- Shortage Management
- Alternative Solution
- Excess Inventory Management