THE DATASHEET OF

PI3CH1000QE

www.win-source.net 0086-755-83957316

10-Bit Bus Switch, 2-Enable Low 1.8V/2.5V/3.3V, High-Bandwidth, Hot Plug

Features

- Near-Zero propagation delay
- 5-ohm switches connect inputs to outputs
- High signal passing bandwidth (500 MHz)
- Beyond Rail-to-Rail switching
  - 0 to 5V switching with 3.3V power supply
  - 0 to 3.3V switching with 2.5V power supply
- 5V I/O tolerant with supply in OFF and ON state
- 1.8V, 2.5V and 3.3V supply voltage operation
- Hot Insertion Capable
- Industrial Operating Temperature: –40 ℃ to +85 ℃
- 8kV ESD Protection (human body model)
- Latch-up Performance: >200mA per JESD17
- Packaging (Pb-free & Green available):
  -24-pin 173-mil wide plastic TSSOP (L)

Pin Configuration

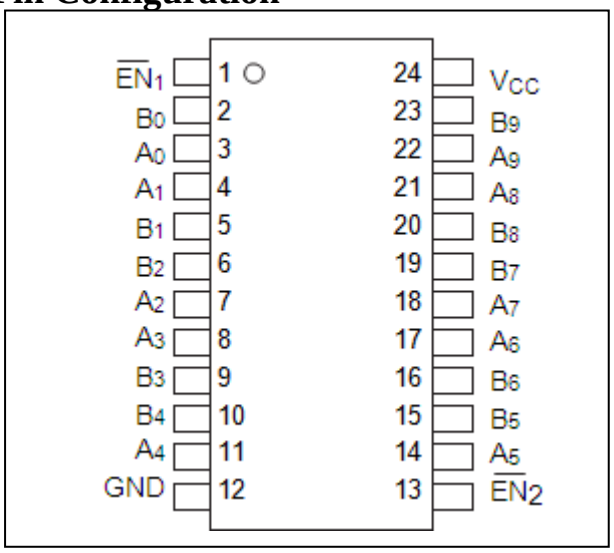

Pin Description

Pin No	Pin Name	Description
1, 13	$\overline{EN}_1$, $\overline{EN}_2$	Switch Enables
3,4,7,8,11, 14,17,18,22	A0-A9	A Ports
2,5,6,9,10,15, 16,19,20,23	B0-B9	B Ports
16	V_{CC}	Power
8	GND	Ground

Description

The PI3CH1000 is a low voltage, 10-channel switch designed with fast dual H1 enables. The switch introduces no additional ground bounce noise or propagation delay.

The PI3CH1000 device has active low enables. It is very useful in switching signals that have high bandwidth (500 MHz).

Applications

- High Bandwidth Data Switching
- Hot-Docking
- Analog Signal Switching
- Differential Signal Switching

Block Diagram

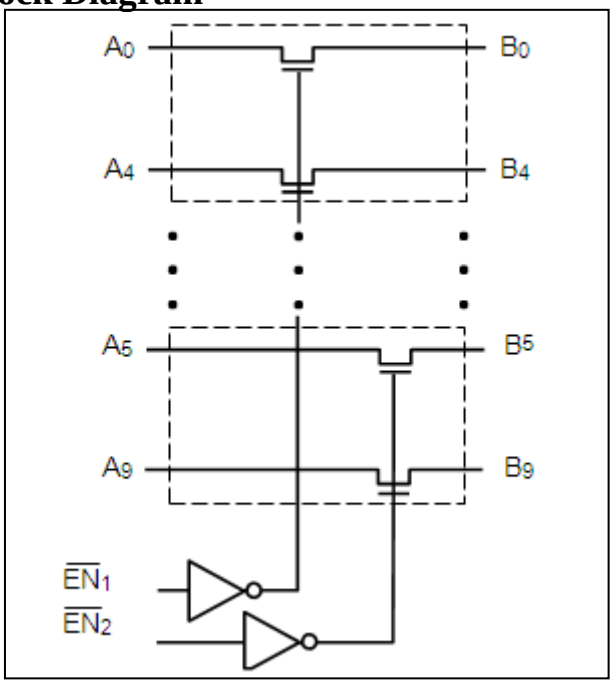

Truth Table(1)

$\overline{EN}_1$	$\overline{EN}_2$	B0-B4	B5-B9	Function
H	H	Hi-Z	Hi-Z	Disconnect
L	H	A0-A4	Hi-Z	Connect
H	L	Hi-Z	A5-A9	Connect
L	L	A0-A4	A5-A9	Connect

Note:

1. H=High Voltage Level; L=Low Voltage Level; Hi-Z=High Impedance

Maximum Ratings

Storage Temperature	-65°C to +150°C
Ambient Temperature with Power Applied	–40 ℃ to +85 ℃
Supply Voltage to Ground Potential	-0.5V to + 4.6V
DC Input Voltage	-0.5V to + 6.0V
DC Output Current	120mA
Power Dissipation	0.5W

Note:
Stresses greater than those listed under MAXIMUM RATINGS may cause permanent damage to the device. This is a stress rating only and functional operation of the device at these or any other conditions above those indicated in the operational sections of this specification is not implied. Exposure to absolute maximum rating conditions for extended periods may affect reliability.

DC Electrical Characteristics

3.3V supply (Over operating range, T_A = -40 ~ +85 ℃, V_{CC}=3.3V ±10%, unless otherwise noted)

Symbol	Description	Test Conditions(1)	Min	Typ(2)	Max	Unit
V_{IH}	Control Input HIGH Voltage	Guaranteed Logic HIGH Level	2.0	-	-	V
V_{IL}	Control Input LOW Voltage	Guaranteed Logic LOW Level	-0.5	-	0.8	V
V_{IK}	Clamp Diode Voltage	V_{CC} = Min., I_{IN} = -18mA	-	-1.3	-1.8	V
I_{IH}	Input HIGH Current	V_{CC} = Max., V_{IN} = V_{CC}	-	-	±1	µA
I_{IL}	Input Low Current	V_{CC} = Max., V_{IN} = GND	-	-	±1	µA
I_{OZH}	High-Impedance Current	0 ≤ A, B ≤ V_{CC}	-	-	±1	µA
R_{ON}	Switch On-Resistance(3)	V_{CC} = Min., V_{IN} = 0.0V I_{ON} = -48mA or -64mA	-	4	6	Ω
		V_{CC} = Min., V_{IN} = 3.6V I_{ON} = -15mA	-	5	8	

Notes:
1. For Max. or Min. conditions, use appropriate value specified under Electrical Characteristics for the applicable device type.
2. Typical values are at V_{CC} = 3.3V, T_A = 25 ℃ ambient and maximum loading.
3. Measured by the voltage drop between A and B pin at indicated current through the switch. On-Resistance is determined by the lower of the voltages on the two (Ax, Bx) pins.

2.5V supply (Over operating range, T_A = -40 ~ +85 ℃, V_{CC}=2.5V ±10%, unless otherwise noted)

Symbol	Description	Test Conditions(1)	Min	Typ(2)	Max	Unit
V_{IH}	Control Input HIGH Voltage	Guaranteed Logic HIGH Level	1.8	-	V_{CC}+0.3	V
V_{IL}	Control Input LOW Voltage	Guaranteed Logic LOW Level	-0.3	-	0.8	V
V_{IK}	Clamp Diode Voltage	V_{CC} = Max., I_{IN} = -6mA	-	-0.7	-1.8	V
I_{IH}	Input HIGH Current	V_{CC} = Max., V_{IN} = V_{CC}	-	-	±1	µA
I_{IL}	Input Low Current	V_{CC} = Max., V_{IN} = GND	-	-	±1	µA
I_{OZH}	High-Impedance Current	0 ≤ A, B ≤ V_{CC}	-	-	±1	µA
R_{ON}	Switch On-Resistance(3)	V_{CC} = Min., V_{IN} = 0.0V I_{ON} = -48mA	-	4	8	Ω
		V_{CC} = Min., V_{IN} = 2.25V I_{ON} = -15mA	-	7	14	

Notes:
1. For Max. or Min. conditions, use appropriate value specified under Electrical Characteristics for the applicable device type.
2. Typical values are at V_{CC} = 2.5V, T_A = 25 ℃ ambient and maximum loading.
3. Measured by the voltage drop between A and B pin at indicated current through the switch. On-Resistance is determined by the lower of the voltages on the two (Ax, Bx) pins.

1.8V supply (Over operating range, T_A = -40 ~ +85 ℃, V_{CC}=1.8V ±10%, unless otherwise noted)

Symbol	Description	Test Conditions[1]	Min	Typ[2]	Max	Unit
V_{IH}	Control Input HIGH Voltage	Guaranteed Logic HIGH Level	1.2	-	V_{CC}+0.3	V
V_{IL}	Control Input LOW Voltage	Guaranteed Logic LOW Level	-0.3	-	0.6	V
V_{IK}	Clamp Diode Voltage	V_{CC} = Min., I_{IN} = -18mA	-	-0.7	-1.8	V
I_{IH}	Input HIGH Current	V_{CC} = Max., V_{IN} = V_{CC}	-	-	±1	µA
I_{IL}	Input Low Current	V_{CC} = Max., V_{IN} = GND	-	-	±1	µA
I_{OZH}	High-Impedance Current	0 ≤ A, B ≤ V_{CC}	-	-	±1	µA
R_{ON}	Switch On-Resistance[3]	V_{CC} = Min., V_{IN} = 0.0V I_{ON} = -48mA	-	4	8	Ω
		V_{CC} = Min., V_{IN} = 1.6V I_{ON} = -15mA	-	10	25	

Notes:
1. For Max. or Min. conditions, use appropriate value specified under Electrical Characteristics for the applicable device type.
2. Typical values are at V_{CC} = 1.8V, T_A = 25 ℃ ambient and maximum loading.
3. Measured by the voltage drop between A and B pin at indicated current through the switch. On-Resistance is determined by the lower of the voltages on the two (Ax, Bx) pins.

Capacitance (T_A = 25 ℃, f=1MHz)

Symbol[1]	Description	Test Conditions	Typ[2]	Unit
C_{IN}	Input Capacitance	V_{IN} = 0V	2.0	pF
C_{OFF}	A/B Capacitance, Switch Off		3.5	
C_{ON}	A/B Capacitance, Switch On		7.0	

Note:
1. These parameters are determined by device characterization but are not production tested

Power Supply Characteristics

Symbol	Description	Test Conditions[1]	Min	Typ	Max	Unit
I_{CC}	Quiescent Power Supply Current	V_{CC} = 3.6V, V_{IN} = GND or V_{CC}	-	0.2	0.5	mA

Note:
1. For Max. or Min. conditions, use appropriate value specified under Electrical Characteristics for the applicable device.
2. Typical values are at +25 ℃ ambient

Dynamic Electrical Characteristics

(Over Operating Range, T_A = -40 ~ +85 ℃, V_{CC}=3.3V ±10%)

Symbol	Description	Test Conditions	Min	Typ	Max	Unit
X_{TALK}	Crosstalk	10MHz	-	-60	-	dB
O_{IRR}	Off-Isolation	10MHz	-	-60	-	
BW	-3dB Bandwidth	See test Diagram	-	500	-	MHz

Switch Characteristics

Over 3.3V Operating Range

Symbol	Description	Test Conditions[1]	Min	Typ	Max	Unit
t_{PLH}, t_{PHL}	Propagation Delay[2, 3] Ax to Bx, Bx to Ax	See test Diagram	-	-	0.3	ns
t_{PZH}, t_{PZL}	Enable Time $\overline{EN}$x to Ax or Bx	See test Diagram	1.5	-	9.0	
t_{PHZ}, t_{PLZ}	Disable Time $\overline{EN}$x to Ax or Bx	See test Diagram	1.5	-	9.0	

Note:
1. See test circuit and waveforms.
2. This parameter is guaranteed but not tested on Propagation Delays.
3. The switch contributes no propagation delay other than the RC delay of the On-Resistance of the switch and the load capacitance. The time constant for the switch alone is of the order of 0.30ns for 10pF load. Since this time constant is much smaller than the rise/fall times of typical driving signals, it adds very little propagation delay to the system. Propagation delay of the switch when used in a system is determined by the driving circuit on the driving side of the switch and its interaction with the load on the driven side.

Over 2.5V Operating Range

Symbol	Description	Test Conditions(1)	Min	Type	Max	Unit
t_{PLH}, t_{PHL}	Propagation Delay(2, 3) Ax to Bx, Bx to Ax	See test Diagram	-	-	0.3	ns
t_{PZH}, t_{PZL}	Enable Time $\overline{EN}$x to Ax or Bx	See test Diagram	1.5	-	15.0	
t_{PHZ}, t_{PLZ}	Disable Time $\overline{EN}$x to Ax or Bx	See test Diagram	1.5	-	12.0	

Note:
1. See test circuit and waveforms.
2. This parameter is guaranteed but not tested on Propagation Delays.
3. The switch contributes no propagation delay other than the RC delay of the On-Resistance of the switch and the load capacitance. The time constant for the switch alone is of the order of 0.30ns for 10pF load. Since this time constant is much smaller than the rise/fall times of typical driving signals, it adds very little propagation delay to the system. Propagation delay of the switch when used in a system is determined by the driving circuit on the driving side of the switch and its interaction with the load on the driven side.

Over 1.8V Operating Range

Symbol	Description	Test Conditions(1)	Min	Type	Max	Unit
t_{PLH}, t_{PHL}	Propagation Delay(2, 3) Ax to Bx, Bx to Ax	See test Diagram	-	-	0.3	ns
t_{PZH}, t_{PZL}	Enable Time $\overline{EN}$x to Ax or Bx	See test Diagram	1.5	-	25.0	
t_{PHZ}, t_{PLZ}	Disable Time $\overline{EN}$x to Ax or Bx	See test Diagram	1.5	-	12.0	

Note:
1. See test circuit and waveforms.
2. This parameter is guaranteed but not tested on Propagation Delays.
3. The switch contributes no propagation delay other than the RC delay of the On-Resistance of the switch and the load capacitance. The time constant for the switch alone is of the order of 0.30ns for 10pF load. Since this time constant is much smaller than the rise/fall times of typical driving signals, it adds very little propagation delay to the system. Propagation delay of the switch when used in a system is determined by the driving circuit on the driving side of the switch and its interaction with the load on the driven side.

Test Circuit for Electrical Characteristics

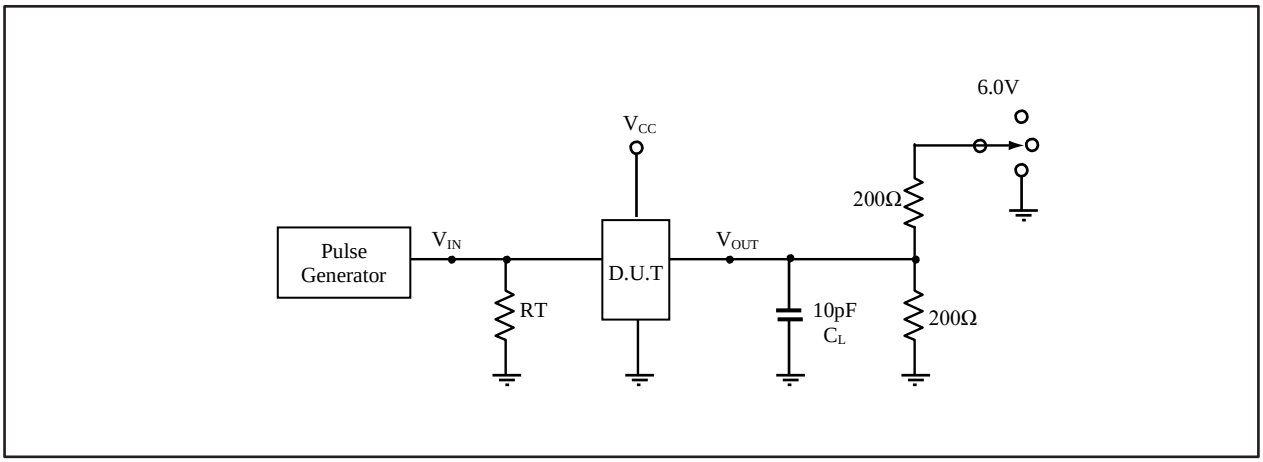

Notes:
1. C_L = Load capacitance: includes jig and probe capacitance.
2. R_T = Termination resistance: should be equal to Z_{OUT} of the Pulse Generator
3. All input impulses are supplied by generators having the following characteristics: PRR ≤ 10 MHz, Z_O = 50-ohm, t_R ≤ 2.5ns, t_F ≤ 2.5ns.
4. The outputs are measured one at a time with one transition per measurement.

Switch Positions

Test	Switch
t_{PLZ}, t_{PZL}	6.0V
t_{PHZ}, t_{PZH}	GND
Prop Delay	Open

Test Circuit for Dynamic Electrical Characteristics

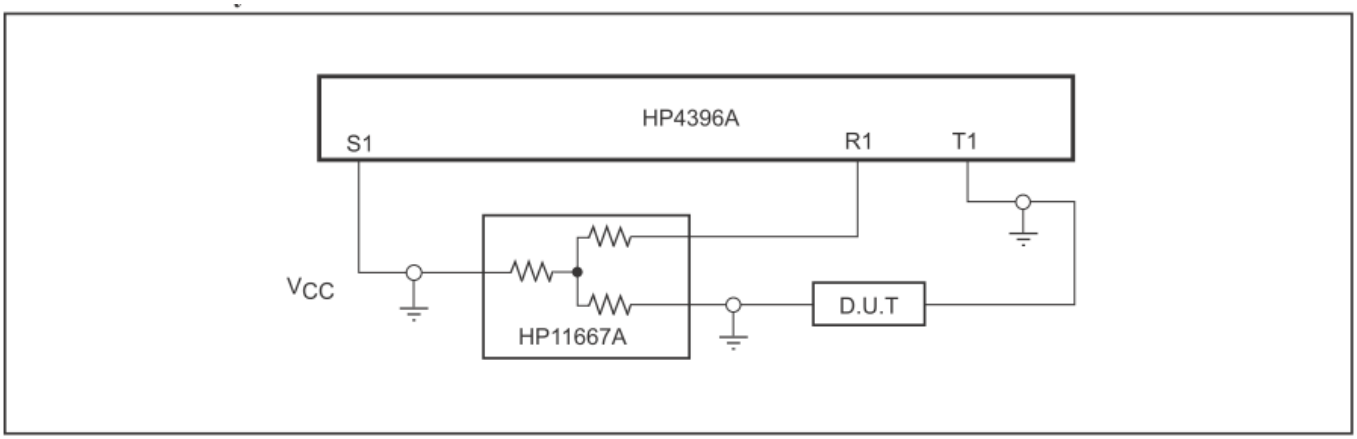

Switching Waveforms

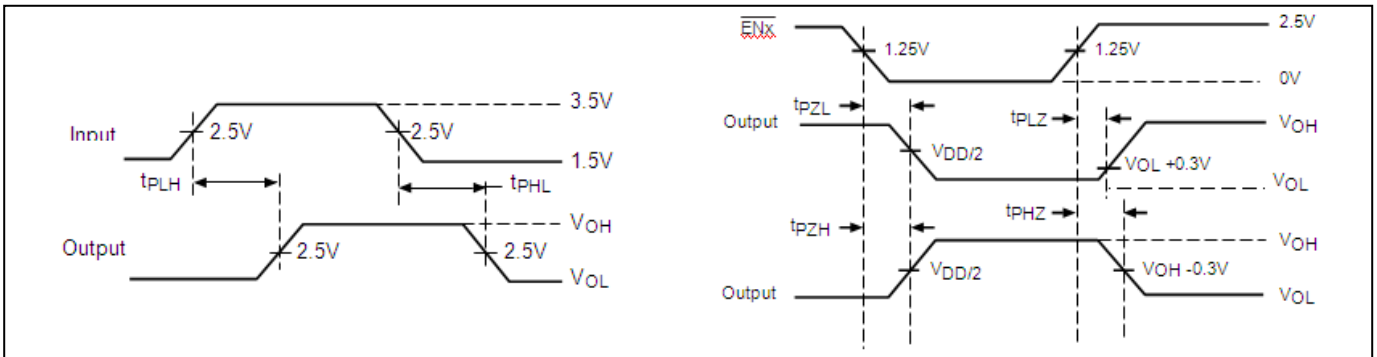

Voltage Waveforms Enable and Disable Times

Applications Information

Logic Inputs

The logic control inputs can be driven up to 3.6V regardless of the supply voltage. For example, given a +3.3V supply, $\overline{EN}$ may be driven LOW to 0V and HIGH to 3.6V. Driving $\overline{EN}$ Rail-to-Rail® minimizes power consumption.

Hot Insertion

For Datacom and Telecom applications that have ten or more volts passing through the backplane, a high voltage from the power supply may be seen at the device input pins during hot insertion. The PI3CH1000 devices have maximum limits of 6V and 120mA for 20ns. If the power is higher or applied for a longer time or repeatedly reaches the maximum limits, the devices can be damaged.

Rail-to-Rail is a registered trademark of Nippon Motorola, Ltd.

Mechanical Information

24-Pin TSSOP(L)

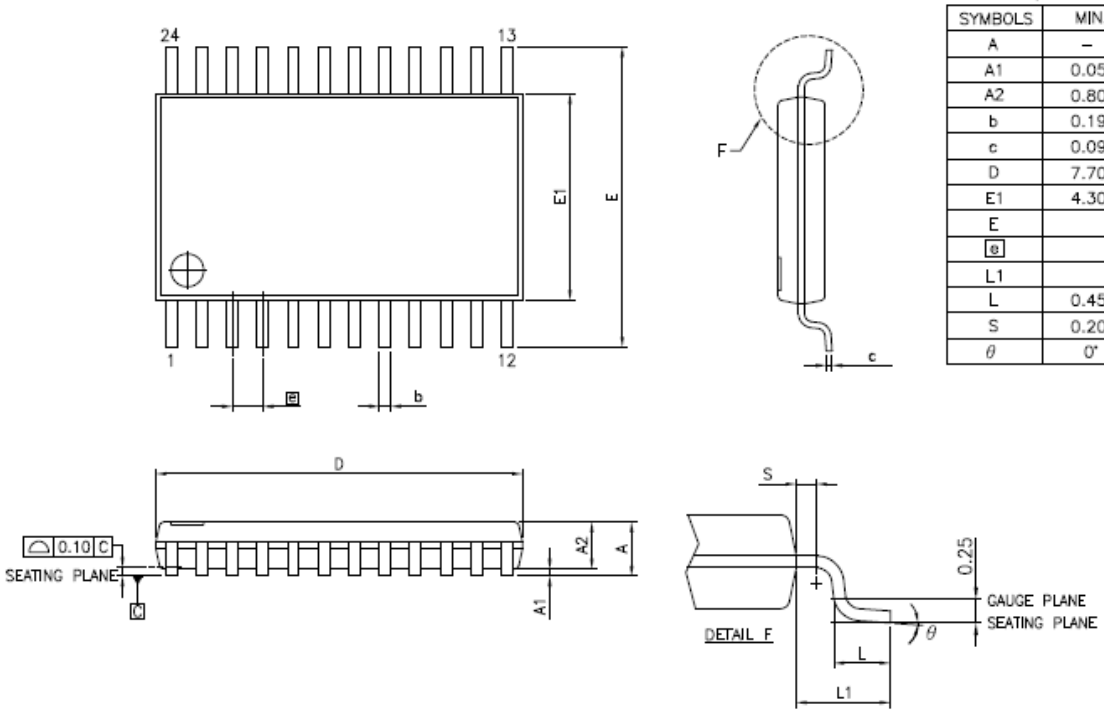

VARIATIONS (ALL DIMENSIONS SHOWN IN MM)

SYMBOLS	MIN.	NOM.	MAX.
A	–	–	1.20
A1	0.05	–	0.15
A2	0.80	1.00	1.05
b	0.19	–	0.30
c	0.09	–	0.20
D	7.70	7.80	7.90
E1	4.30	4.40	4.50
E	6.40 BSC		
e	0.65 BSC		
L1	1.00 REF		
L	0.45	0.60	0.75
S	0.20	–	–
θ	0°	–	8°

Notes:
1. Refer JEDEC: MO-153F/AD
2. Controlling dimensions in millimeters
3. Package outline exclusive of mold flash and metal burr

PERICOM Enabling Serial Connectivity — DATE: 05/03/12
DESCRIPTION: 24-pin, 173mil Wide TSSOP
PACKAGE CODE: L
DOCUMENT CONTROL #: PD-1312 — REVISION: F

Ordering Information

Part No.	Package Cede	Package
PI3CH1000LE	L	Lead free and Green 24-Pin TSSOP
PI3CH1000LEX	L	Lead free and Green 24-Pin TSSOP , Tape & Reel

Note:
- E = Pb-free & Green
- Adding X Suffix= Tape/Reel

Pericom reserves the right to make changes to its products or specifications at any time, without notice, in order to improve design or performance and to supply the best possible product. Pericom does not assume any responsibility for use of any circuitry described other than the circuitry embodied in Pericom product. The company makes no representations that circuitry described herein is free from patent infringement or other rights, of Pericom.

Looking for pricing, stock, or lifecycle information?

Click below to explore more details on WIN SOURCE:

- View PI3CH1000QE on WIN SOURCE
- Diodes Incorporated Information

Optimize Your Supply Chain with WIN SOURCE Solutions

- Global Sourcing Solution
- Obsolete Management
- Cost Control Management
- Shortage Management
- Alternative Solution
- Excess Inventory Management