THE DATASHEET OF

OPB686

www.win-source.net 0086-755-83957316

Photologic® Optical Flag Switch

OPB685-3, OPB686, OPB687, OPB695, OPB696, OPB697, OPB698 Series

OPB685

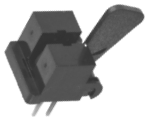

OPB695

Features:

- Photologic® output
- Four output options
- Mechanical switch replacement
- Printed circuit board mounting (OPB685-3)
- 2.5mm, 3-pin connector mates with Molex connector 5051 series housing and 4809 series terminal for OPB695 Series

Description:

Each **OPB685-3** and **OPB695** series flag switch consists of an infrared emitting diode and a monolithic integrated circuit that incorporates a photodiode, a linear amplifier and a Schmitt trigger. A lever arm actuated flag interrupts the light beam, which switches the output between states that can readily drive logic gates.

The **OPB695** series is designed to easily snap mount into a 0.037” ± 0.001” (0.940 mm ± 0.025 mm) thick material with a rectangular opening of 0.320” ± 0.003” x 0.472” (8.13 mm x 11.99 mm) minimum. Insertion into the punched side of metal is recommended.

Devices in these series feature TTL/LSTTL compatible logic level output that can drive up to 10 TTL loads over a voltage range from 4.5 V to 16 V.

Customized lever arms and spring torques can be designed for specific applications for each of the devices.

Custom electrical, wire, cabling and connectors are available. Contact your local representative or OPTEK for more information.

Applications:

- Mechanical switch replacement
- Speed indication (tachometer)
- Mechanical limit indication
- Edge sensing

Ordering Information

Part Number	LED Peak Wavelength	Sensor Photologic®	Flag Travel Degrees Max	Lead Length / Spacing or Connector
OPB685-3	890 nm	10K Pull-Up	59°	0.100" / 0.275"
OPB686		Open Collector		
OPB687		Inv. 10K Pull-Up		
OPB695AZ		10K Pull-Up	70°	Mates with 3 Pin—Molex 5051 (22-01-1032) Housing & 4809 (08-70-0069) Terminals
OPB696AZ		Open Collector		
OPB697AZ		Inv. 10K Pull-Up		
OPB698CZ		Inv. Open Collector		

RoHS

General Note
TT Electronics reserves the right to make changes in product specification without notice or liability. All information is subject to TT Electronics’ own data and is considered accurate at time of going to print.

OPTEK Technology, Inc.
1645 Wallace Drive, Carrollton, TX 75006|Ph: +1 972 323 2200
www.optekinc.com | www.ttelectronics.com

© TT electronics plc

Photologic® Optical Flag Switch

OPB685-3, OPB686, OPB687, OPB695, OPB696, OPB697, OPB698 Series

OPB685-3, OPB686, OPB687,

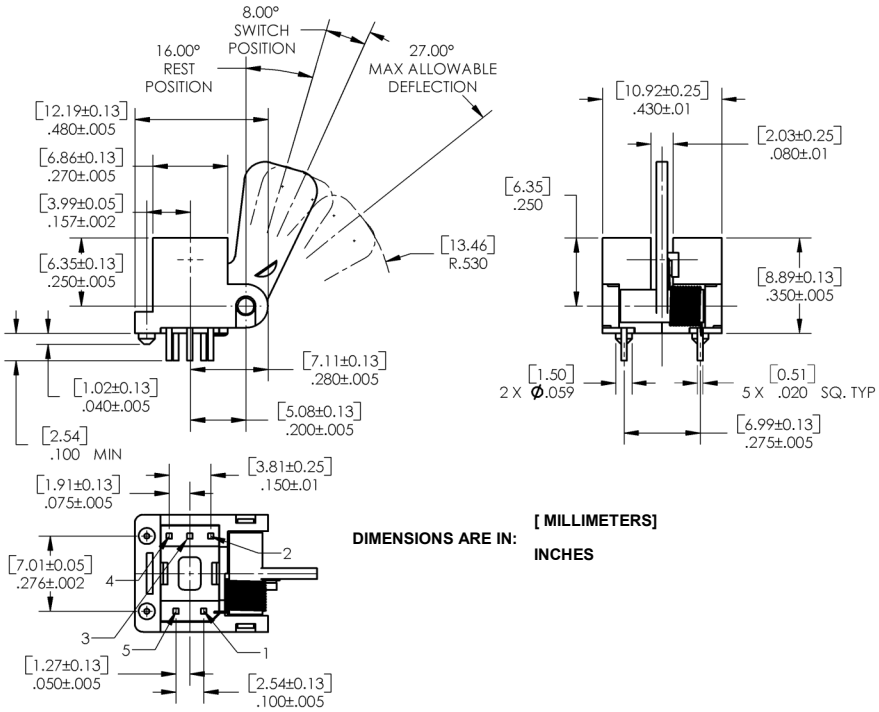

Pin #	Description
1	Anode
5	Cathode
2	Ground
3	Output
4	V_{CC}

OP695, OPB696, OPB697, OPB698

Part Number	Max. Torque (Grams)
OPB685-3	3.0
OPB686	1.5
OPB687	1.5
OPB695	1.5
OPB696	1.5
OPB697	1.5
OPB698	1.5

Torque is measured at the end of the arm from the resting position to the switching point of the flag

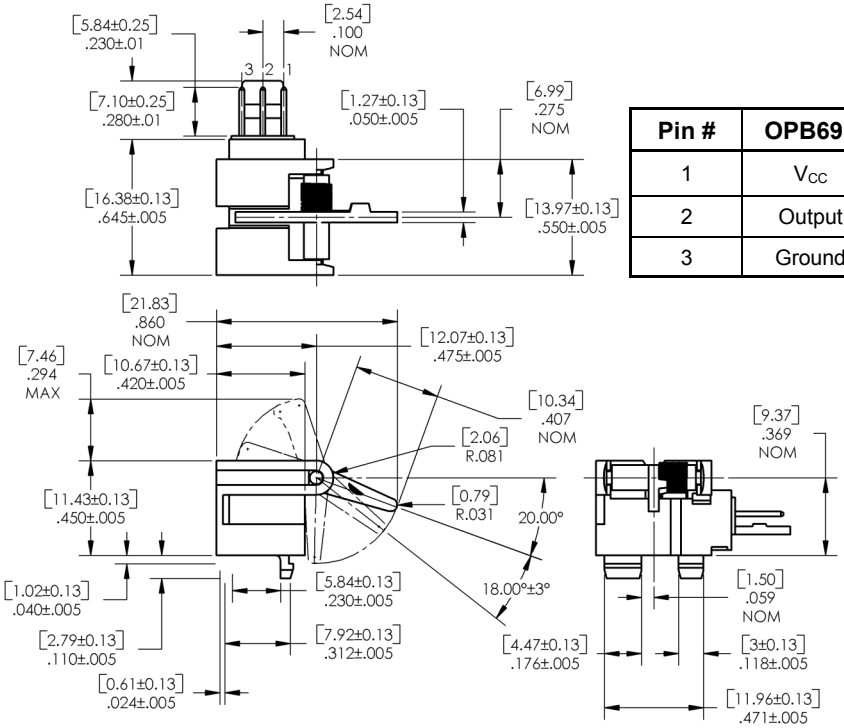

Pin #	OPB695
1	V_{CC}
2	Output
3	Ground

General Note
TT Electronics reserves the right to make changes in product specification without notice or liability. All information is subject to TT Electronics' own data and is considered accurate at time of going to print.

OPTEK Technology, Inc.
1645 Wallace Drive, Carrollton, TX 75006|Ph: +1 972 323 2200
www.optekinc.com | www.ttelectronics.com

© TT electronics plc

Absolute Maximum Ratings (T_A = 25° C unless otherwise noted)	
Storage & Operating Temperature Range	-40°C to +100°C
Lead Soldering Temperature [1/16 inch (1.6mm) from the case for 5 sec. with soldering iron][1]	260°C
Input Diode	
Reverse Voltage	2.0 V
Continuous Forward Current	50 mA
Peak Forward Current	3.0 A
Total Device Power Dissipation[2]	100 mW
Output Photologic®	
Supply Voltage, V_{CC}	18 V
Duration of Output Short to V_{CC}	1 second
Voltage at Output	30 V
Low Level Output Current (sinking)	16 mA
Power Dissipation[3] [4]	240 mW

Notes:

(1) RMA flux is recommended. Duration can be extended to 10 seconds maximum when flow soldering.
(2) Derate linearly 1.33 mW/°C above 25° C.
(3) Derate linearly 2.00 mW/°C above 25° C (OPB680, OPB680-20, OPB690Z).
(4) Derate linearly 2.50 mW/°C above 25° C (OPB685-3, OPB686, OPB687, OPB695, OPB696, OPB697, OPB698).

General Note
TT Electronics reserves the right to make changes in product specification without notice or liability. All information is subject to TT Electronics' own data and is considered accurate at time of going to print.

© TT electronics plc

OPTEK Technology, Inc.
1645 Wallace Drive, Carrollton, TX 75006|Ph: +1 972 323 2200
www.optekinc.com | www.ttelectronics.com

OPB685-3 and OPB695 Series

OPB685-3, OPB695 Buffered 10K Pull-Up

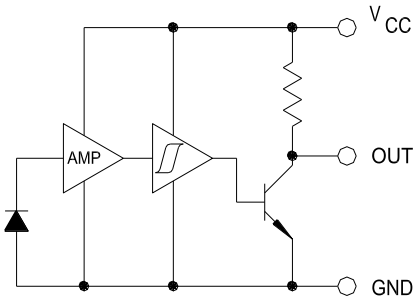

OPB686, OPB696 Buffered Open-Collector

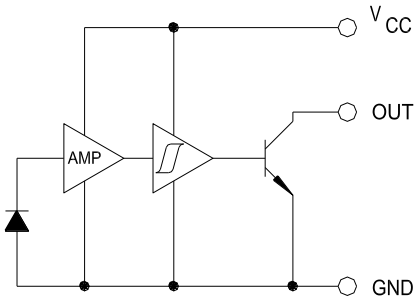

OPB687, OPB697 Inverted 10K Pull-Up

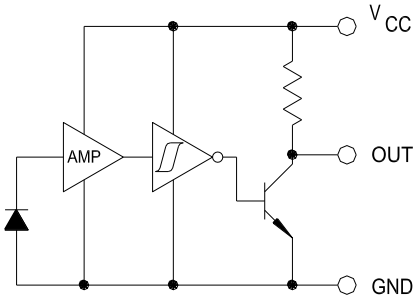

OPB698 Inverted Open-Collector

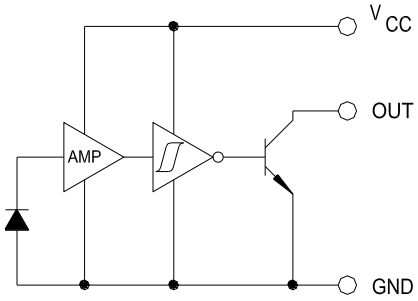

General Note
TT Electronics reserves the right to make changes in product specification without notice or liability. All information is subject to TT Electronics' own data and is considered accurate at time of going to print.

© TT electronics plc

OPTEK Technology, Inc.
1645 Wallace Drive, Carrollton, TX 75006|Ph: +1 972 323 2200
www.optekinc.com | www.ttelectronics.com

Electrical Characteristics (T_A = 25° C unless otherwise noted)

SYMBOL	PARAMETER	MIN	TYP	MAX	UNITS	TEST CONDITIONS
Input Diode						
V_F	Forward Voltage	-	-	1.6	V	I_F = 10 mA
I_R	Reverse Current	-	-	100	µA	V_R = 3 V
Output Photologic® Sensor						
V_{CC}	Operating DC Supply Voltage OPB685-3 Series OPB695-698A OPB695-698B OPB695-698C	 4.5 4.5 8.0 13.5	 - 5.0 12.0 15.0	 16.0 8.0 13.5 16.0	V	
I_{CC}	Operating DC Supply Voltage OPB695-698A/B/C	-	20	30	mA	
I_{CCL}	Low Level Supply Current: Buffered 10k Pull-Up OPB685-3 Buffered Open-Collector OPB686	 - -	 5.5 4.0	 12 12	mA	V_{CC} = 16 V, I_F = 0 mA (no load on output)
	Inverted 10k Pull-Up OPB687	-	6.5	12	mA	V_{CC} = 16 V, I_F = 10 mA (no load on output)
I_{CCH}	High Level Supply Current: Buffered 10k Pull-Up OPB685-3 Buffered Open-Collector OPB686	-	5.0	12	mA	V_{CC} = 16 V, I_F = 10 mA (no load on output)
	Inverted 10k Pull-Up OPB687	-	4.0	12	mA	V_{CC} = 16 V, I_F = 0 mA (no load on output)
V_{OL}	Low Level Output Voltage[1]: Buffered 10k Pull-Up OPB685-3 OPB686 Buffered Open-Collector OPB695 OPB696A/B/C	 - - - -	 - - - -	 0.4 0.4 0.4 0.4	V	 V_{CC} = 4.5 V, I_{OL} = 16 mA, I_F = 0 V_{CC} = 4.5 V to 8 V, I_{OL} = 16 mA V_{CC} = 8.5 V to 13 V, I_{OL} = 16 mA V_{CC} = 13.5 V to 16 V, I_{OL} = 16 mA
	Inverted 10k Pull-Up[2] OPB685-3 OPB686 Inverted Open-Collector OPB695 OPB696A/B/C	 - - - -	 - - - -	 0.4 0.4 0.4 0.4	V	 V_{CC} = 4.5 V, I_{OL} = 16 mA, I_F = 0 V_{CC} = 4.5 V to 8 V, I_{OL} = 16 mA V_{CC} = 8.5 V to 13 V, I_{OL} = 16 mA V_{CC} = 13.5 V to 16 V, I_{OL} = 16 mA
V_{OH}	High Level Output Voltage[2]: Buffered 10k Pull-Up	V_{CC} -1.5	-	-	V	I_{OH} = 100 µA, I_F = 10 mA
	Inverted 10k Pull-Up[1] Inverted Open-Collector	V_{CC} -1.5	-	-	V	I_{OH} = 100 µA, I_F = 0 mA
I_{OH}	High Level Output Voltage[2]: Buffered Open-Collector OPB686 OPB696A OPB696B OPB696C	 - - - -	 - - - -	 100 100 100 100	µA	 V_{CC} = 16 V, I_F = 10 mA, V_{CH} = 30 V V_{CC} = 4.5 V to 8 V, V_{OH} = 30 V V_{CC} = 8.5 V to 13 V, V_{OH} = 30 V V_{CC} = 13.5 V to 16 V, V_{OH} = 30 V
	Inverted 10k Pull-Up[1] OPB698A OPB698B OPB698C	 - - -	 - - -	 100 100 100	µA	 V_{CC} = 4.5 V to 8 V, V_{OH} = 30 V[1] V_{CC} = 8.5 V to 13 V, V_{OH} = 30 V[1] V_{CC} = 13.5 V to 16 V, V_{OH} = 30 V[1]

General Note
TT Electronics reserves the right to make changes in product specification without notice or liability. All information is subject to TT Electronics' own data and is considered accurate at time of going to print.

OPTEK Technology, Inc.
1645 Wallace Drive, Carrollton, TX 75006|Ph: +1 972 323 2200
www.optekinc.com | www.ttelectronics.com

© TT electronics plc

Electrical Characteristics (T_A = 25° C unless otherwise noted)						
SYMBOL	**PARAMETER**	**MIN**	**TYP**	**MAX**	**UNITS**	**TEST CONDITIONS**
Output Photologic® Sensor (continued)						
$I_{F(+)}$	LED Positive-Going Threshold Current OPB685-3—687	0.1	1.8	10	mA	V_{CC} = 5 V
$I_{F(+)}/I_{F(-)}$	Hysteresis OPB685-3	1.0	1.2	1.6	mA	V_{CC} = 5 V
$t_r t_f$	Rise Time, Fall Time	-	30	-	ns	V_{CC} = 5 V, I_F = 0 or 10 mA R_L = 300 Ω, DC = 50% f = 10 kHz
$t_{PLH} t_{PHL}$	Propagation Delay Low-High & High-Low: Buffer, 10k Pull-Up OPB685-3 Buffer, Open-Collector OPB686	- -	1 (LH) 2 (HL)	- -	µs µs	
	Inverter, 10k Pull-Up OPB687	-	2 (LH)	-	µs	

Notes:

(1) Test requires lever arm in “blocked” position.

(2) Test requires lever arm in “unblocked” position

General Note

TT Electronics reserves the right to make changes in product specification without notice or liability. All information is subject to TT Electronics’ own data and is considered accurate at time of going to print.

© TT electronics plc

OPTEK Technology, Inc.

1645 Wallace Drive, Carrollton, TX 75006|Ph: +1 972 323 2200

www.optekinc.com | www.ttelectronics.com

Issue	Change Description	Approval	Date
A	Initial Release—New Layout		03/08/06
A.1	Changed connector information	Mark Miller	1/22/07
A.2	Fixed Absolute Maximum ratings for the LED on page 3	Mark Miller	04/03/2009
A.3	Added Notes #2—"Test requires lever arm in "unblocked" position	Tom Osborne	03/05/2015
B	Transferred to the new TT Electronics template	L. Timpa	10/5/2016
C	Eliminated obsolete product #s	Julia Knight	9/20/17

General Note
TT Electronics reserves the right to make changes in product specification without notice or liability. All information is subject to TT Electronics' own data and is considered accurate at time of going to print.

© TT electronics plc

OPTEK Technology, Inc.
1645 Wallace Drive, Carrollton, TX 75006|Ph: +1 972 323 2200
www.optekinc.com | www.ttelectronics.com

Looking for pricing, stock, or lifecycle information?

Click below to explore more details on WIN SOURCE:

- View OPB686 on WIN SOURCE
- TT Electronics Information

Optimize Your Supply Chain with WIN SOURCE Solutions

- Global Sourcing Solution
- Obsolete Management
- Cost Control Management
- Shortage Management
- Alternative Solution
- Excess Inventory Management