THE DATASHEET OF

EP2S60F484C4

www.win-source.net 0086-755-83957316

Stratix II Device Handbook, Volume 1

101 Innovation Drive
San Jose, CA 95134
www.altera.com

SII5V1-4.5

Copyright © 2011 Altera Corporation. All rights reserved. Altera, The Programmable Solutions Company, the stylized Altera logo, specific device designations, and all other words and logos that are identified as trademarks and/or service marks are, unless noted otherwise, the trademarks and service marks of Altera Corporation in the U.S. and other countries. All other product or service names are the property of their respective holders. Altera products are protected under numerous U.S. and foreign patents and pending applications, maskwork rights, and copyrights. Altera warrants performance of its semiconductor products to current specifications in accordance with Altera's standard warranty, but reserves the right to make changes to any products and services at any time without notice. Altera assumes no responsibility or liability arising out of the application or use of any information, product, or service described herein except as expressly agreed to in writing by Altera Corporation. Altera customers are advised to obtain the latest version of device specifications before relying on any published information and before placing orders for products or services.

Altera Lead-Free

I.S. EN ISO 9001

Contents

Chapter Revision Dates vii

About this Handbook i
How to Contact Altera i
Typographic Conventions i

Section I. Stratix II Device Family Data Sheet
Revision History ..... Section I–1

Chapter 1. Introduction
Introduction 1–1
Features 1–1
Document Revision History 1–6

Chapter 2. Stratix II Architecture
Functional Description 2–1
Logic Array Blocks 2–3
LAB Interconnects 2–4
LAB Control Signals 2–5
Adaptive Logic Modules 2–6
ALM Operating Modes 2–9
Register Chain 2–20
Clear & Preset Logic Control 2–22
MultiTrack Interconnect 2–22
TriMatrix Memory 2–28
Memory Block Size 2–29
Digital Signal Processing Block 2–40
Modes of Operation 2–44
DSP Block Interface 2–44
PLLs & Clock Networks 2–48
Global & Hierarchical Clocking 2–48
Enhanced & Fast PLLs 2–57
Enhanced PLLs 2–68
Fast PLLs 2–69
I/O Structure 2–69
Double Data Rate I/O Pins 2–77
External RAM Interfacing 2–81
Programmable Drive Strength 2–83

Open-Drain Output 2–84
Bus Hold 2–84
Programmable Pull-Up Resistor 2–85
Advanced I/O Standard Support 2–85
On-Chip Termination 2–89
MultiVolt I/O Interface 2–93
High-Speed Differential I/O with DPA Support 2–96
Dedicated Circuitry with DPA Support 2–100
Fast PLL & Channel Layout 2–102
Document Revision History 2–104

Chapter 3. Configuration & Testing

IEEE Std. 1149.1 JTAG Boundary-Scan Support 3–1
SignalTap II Embedded Logic Analyzer 3–4
Configuration 3–4
Operating Modes 3–5
Configuration Schemes 3–7
Configuring Stratix II FPGAs with JRunner 3–10
Programming Serial Configuration Devices with SRunner 3–10
Configuring Stratix II FPGAs with the MicroBlaster Driver 3–11
PLL Reconfiguration 3–11
Temperature Sensing Diode (TSD) 3–11
Automated Single Event Upset (SEU) Detection 3–13
Custom-Built Circuitry 3–14
Software Interface 3–14
Document Revision History 3–14

Chapter 4. Hot Socketing & Power-On Reset

Stratix II
Hot-Socketing Specifications 4–1
Devices Can Be Driven Before Power-Up 4–2
I/O Pins Remain Tri-Stated During Power-Up 4–2
Signal Pins Do Not Drive the V_{CCIO}, V_{CCINT} or V_{CCPD} Power Supplies 4–2
Hot Socketing Feature Implementation in Stratix II Devices 4–3
Power-On Reset Circuitry 4–5
Document Revision History 4–6

Chapter 5. DC & Switching Characteristics

Operating Conditions 5–1
Absolute Maximum Ratings 5–1
Recommended Operating Conditions 5–2
DC Electrical Characteristics 5–3
I/O Standard Specifications 5–4
Bus Hold Specifications 5–17
On-Chip Termination Specifications 5–17
Pin Capacitance 5–19
Power Consumption 5–20

Timing Model 5–20
Preliminary & Final Timing 5–20
I/O Timing Measurement Methodology 5–21
Performance 5–27
Internal Timing Parameters 5–34
Stratix II Clock Timing Parameters 5–41
Clock Network Skew Adders 5–50
IOE Programmable Delay 5–51
Default Capacitive Loading of Different I/O Standards 5–52
I/O Delays 5–54
Maximum Input & Output Clock Toggle Rate 5–66
Duty Cycle Distortion 5–77
DCD Measurement Techniques 5–78
High-Speed I/O Specifications 5–87
PLL Timing Specifications 5–91
External Memory Interface Specifications 5–94
JTAG Timing Specifications 5–96
Document Revision History 5–97

Chapter 6. Reference & Ordering Information

Software 6–1
Device Pin-Outs 6–1
Ordering Information 6–1
Document Revision History 6–2

Chapter Revision Dates

The chapters in this book, *Stratix II Device Handbook, Volume 1*, were revised on the following dates. Where chapters or groups of chapters are available separately, part numbers are listed.

Chapter 1. Introduction
Revised: *May 2007*
Part number: *SII51001-4.2*

Chapter 2. Stratix II Architecture
Revised: *May 2007*
Part number: *SII51002-4.3*

Chapter 3. Configuration & Testing
Revised: *May 2007*
Part number: *SII51003-4.2*

Chapter 4. Hot Socketing & Power-On Reset
Revised: *May 2007*
Part number: *SII51004-3.2*

Chapter 5. DC & Switching Characteristics
Revised: *April 2011*
Part number: *SII51005-4.5*

Chapter 6. Reference & Ordering Information
Revised: *April 2011*
Part number: *SII51006-2.2*

About this Handbook

This handbook provides comprehensive information about the Altera® Stratix® II family of devices.

How to Contact Altera

For the most up-to-date information about Altera products, refer to the following table.

Contact *(1)*	Contact Method	Address
Technical support	Website	www.altera.com/support
Technical training	Website	www.altera.com/training
	Email	custrain@altera.com
Product literature	Email	www.altera.com/literature
Altera literature services	Website	literature@altera.com
Non-technical support (General)	Email	nacomp@altera.com
(Software Licensing)	Email	authorization@altera.com

Note to table:
(1) You can also contact your local Altera sales office or sales representative.

Typographic Conventions

This document uses the typographic conventions shown below.

Visual Cue	Meaning
Bold Type with Initial Capital Letters	Command names, dialog box titles, checkbox options, and dialog box options are shown in bold, initial capital letters. Example: **Save As** dialog box.
bold type	External timing parameters, directory names, project names, disk drive names, filenames, filename extensions, and software utility names are shown in bold type. Examples: $\mathbf{f_{MAX}}$, **\qdesigns** directory, **d:** drive, **chiptrip.gdf** file.
Italic Type with Initial Capital Letters	Document titles are shown in italic type with initial capital letters. Example: *AN 75: High-Speed Board Design.*

Visual Cue	Meaning
Italic type	Internal timing parameters and variables are shown in italic type. Examples: t_{PIA}, $n + 1$. Variable names are enclosed in angle brackets (< >) and shown in italic type. Example: *<file name>*, *<project name>***.pof** file.
Initial Capital Letters	Keyboard keys and menu names are shown with initial capital letters. Examples: Delete key, the Options menu.
"Subheading Title"	References to sections within a document and titles of on-line help topics are shown in quotation marks. Example: "Typographic Conventions."
`Courier type`	Signal and port names are shown in lowercase Courier type. Examples: `data1`, `tdi`, `input`. Active-low signals are denoted by suffix `n`, e.g., `resetn`. Anything that must be typed exactly as it appears is shown in Courier type. For example: `c:\qdesigns\tutorial\chiptrip.gdf`. Also, sections of an actual file, such as a Report File, references to parts of files (e.g., the AHDL keyword `SUBDESIGN`), as well as logic function names (e.g., `TRI`) are shown in Courier.
1., 2., 3., and a., b., c., etc.	Numbered steps are used in a list of items when the sequence of the items is important, such as the steps listed in a procedure.
■ ● •	Bullets are used in a list of items when the sequence of the items is not important.
✓	The checkmark indicates a procedure that consists of one step only.
☞	The hand points to information that requires special attention.
CAUTION	The caution indicates required information that needs special consideration and understanding and should be read prior to starting or continuing with the procedure or process.
WARNING	The warning indicates information that should be read prior to starting or continuing the procedure or processes
↵	The angled arrow indicates you should press the Enter key.
	The feet direct you to more information on a particular topic.

Section I. Stratix II Device Family Data Sheet

This section provides the data sheet specifications for Stratix® II devices. This section contains feature definitions of the internal architecture, configuration and JTAG boundary-scan testing information, DC operating conditions, AC timing parameters, a reference to power consumption, and ordering information for Stratix II devices.

This section contains the following chapters:

- Chapter 1, Introduction
- Chapter 2, Stratix II Architecture
- Chapter 3, Configuration & Testing
- Chapter 4, Hot Socketing & Power-On Reset
- Chapter 5, DC & Switching Characteristics
- Chapter 6, Reference & Ordering Information

Revision History

Refer to each chapter for its own specific revision history. For information on when each chapter was updated, refer to the Chapter Revision Dates section, which appears in the full handbook.

1. Introduction

SII51001-4.2

Introduction

The Stratix® II FPGA family is based on a 1.2-V, 90-nm, all-layer copper SRAM process and features a new logic structure that maximizes performance, and enables device densities approaching 180,000 equivalent logic elements (LEs). Stratix II devices offer up to 9 Mbits of on-chip, TriMatrix™ memory for demanding, memory intensive applications and has up to 96 DSP blocks with up to 384 (18-bit × 18-bit) multipliers for efficient implementation of high performance filters and other DSP functions. Various high-speed external memory interfaces are supported, including double data rate (DDR) SDRAM and DDR2 SDRAM, RLDRAM II, quad data rate (QDR) II SRAM, and single data rate (SDR) SDRAM. Stratix II devices support various I/O standards along with support for 1-gigabit per second (Gbps) source synchronous signaling with DPA circuitry. Stratix II devices offer a complete clock management solution with internal clock frequency of up to 550 MHz and up to 12 phase-locked loops (PLLs). Stratix II devices are also the industry's first FPGAs with the ability to decrypt a configuration bitstream using the Advanced Encryption Standard (AES) algorithm to protect designs.

Features

The Stratix II family offers the following features:

- 15,600 to 179,400 equivalent LEs; see Table 1–1
- New and innovative adaptive logic module (ALM), the basic building block of the Stratix II architecture, maximizes performance and resource usage efficiency
- Up to 9,383,040 RAM bits (1,172,880 bytes) available without reducing logic resources
- TriMatrix memory consisting of three RAM block sizes to implement true dual-port memory and first-in first-out (FIFO) buffers
- High-speed DSP blocks provide dedicated implementation of multipliers (at up to 450 MHz), multiply-accumulate functions, and finite impulse response (FIR) filters
- Up to 16 global clocks with 24 clocking resources per device region
- Clock control blocks support dynamic clock network enable/disable, which allows clock networks to power down to reduce power consumption in user mode
- Up to 12 PLLs (four enhanced PLLs and eight fast PLLs) per device provide spread spectrum, programmable bandwidth, clock switch-over, real-time PLL reconfiguration, and advanced multiplication and phase shifting

- Support for numerous single-ended and differential I/O standards
- High-speed differential I/O support with DPA circuitry for 1-Gbps performance
- Support for high-speed networking and communications bus standards including Parallel RapidIO, SPI-4 Phase 2 (POS-PHY Level 4), HyperTransport™ technology, and SFI-4
- Support for high-speed external memory, including DDR and DDR2 SDRAM, RLDRAM II, QDR II SRAM, and SDR SDRAM
- Support for multiple intellectual property megafunctions from Altera MegaCore® functions and Altera Megafunction Partners Program (AMPP℠) megafunctions
- Support for design security using configuration bitstream encryption
- Support for remote configuration updates

Table 1–1. Stratix II FPGA Family Features

Feature	EP2S15	EP2S30	EP2S60	EP2S90	EP2S130	EP2S180
ALMs	6,240	13,552	24,176	36,384	53,016	71,760
Adaptive look-up tables (ALUTs) *(1)*	12,480	27,104	48,352	72,768	106,032	143,520
Equivalent LEs *(2)*	15,600	33,880	60,440	90,960	132,540	179,400
M512 RAM blocks	104	202	329	488	699	930
M4K RAM blocks	78	144	255	408	609	768
M-RAM blocks	0	1	2	4	6	9
Total RAM bits	419,328	1,369,728	2,544,192	4,520,488	6,747,840	9,383,040
DSP blocks	12	16	36	48	63	96
18-bit × 18-bit multipliers *(3)*	48	64	144	192	252	384
Enhanced PLLs	2	2	4	4	4	4
Fast PLLs	4	4	8	8	8	8
Maximum user I/O pins	366	500	718	902	1,126	1,170

Notes to Table 1–1:

(1) One ALM contains two ALUTs. The ALUT is the cell used in the Quartus® II software for logic synthesis.
(2) This is the equivalent number of LEs in a Stratix device (four-input LUT-based architecture).
(3) These multipliers are implemented using the DSP blocks.

Stratix II devices are available in space-saving FineLine BGA® packages (see Tables 1–2 and 1–3).

Table 1–2. Stratix II Package Options & I/O Pin Counts *Notes (1), (2)*

Device	484-Pin FineLine BGA	484-Pin Hybrid FineLine BGA	672-Pin FineLine BGA	780-Pin FineLine BGA	1,020-Pin FineLine BGA	1,508-Pin FineLine BGA
EP2S15	342		366			
EP2S30	342		500			
EP2S60 *(3)*	334		492		718	
EP2S90 *(3)*		308		534	758	902
EP2S130 *(3)*				534	742	1,126
EP2S180 *(3)*					742	1,170

Notes to Table 1–2:

(1) All I/O pin counts include eight dedicated clock input pins (`clk1p`, `clk1n`, `clk3p`, `clk3n`, `clk9p`, `clk9n`, `clk11p`, and `clk11n`) that can be used for data inputs.

(2) The Quartus II software I/O pin counts include one additional pin, `PLL_ENA`, which is not available as general-purpose I/O pins. The `PLL_ENA` pin can only be used to enable the PLLs within the device.

(3) The I/O pin counts for the EP2S60, EP2S90, EP2S130, and EP2S180 devices in the 1020-pin and 1508-pin packages include eight dedicated fast PLL clock inputs (`FPLL7CLKp/n`, `FPLL8CLKp/n`, `FPLL9CLKp/n`, and `FPLL10CLKp/n`) that can be used for data inputs.

Table 1–3. Stratix II FineLine BGA Package Sizes

Dimension	484 Pin	484-Pin Hybrid	672 Pin	780 Pin	1,020 Pin	1,508 Pin
Pitch (mm)	1.00	1.00	1.00	1.00	1.00	1.00
Area (mm2)	529	729	729	841	1,089	1,600
Length × width (mm × mm)	23 × 23	27 × 27	27 × 27	29 × 29	33 × 33	40 × 40

All Stratix II devices support vertical migration within the same package (for example, you can migrate between the EP2S15, EP2S30, and EP2S60 devices in the 672-pin FineLine BGA package). Vertical migration means that you can migrate to devices whose dedicated pins, configuration pins, and power pins are the same for a given package across device densities.

To ensure that a board layout supports migratable densities within one package offering, enable the applicable vertical migration path within the Quartus II software (Assignments menu > Device > Migration Devices).

After compilation, check the information messages for a full list of I/O, DQ, LVDS, and other pins that are not available because of the selected migration path.

Table 1–4 lists the Stratix II device package offerings and shows the total number of non-migratable user I/O pins when migrating from one density device to a larger density device. Additional I/O pins may not be migratable if migrating from the larger device to the smaller density device.

When moving from one density to a larger density, the larger density device may have fewer user I/O pins. The larger device requires more power and ground pins to support the additional logic within the device. Use the Quartus II Pin Planner to determine which user I/O pins are migratable between the two devices.

Table 1–4. Total Number of Non-Migratable I/O Pins for Stratix II Vertical Migration Paths

Vertical Migration Path	484-Pin FineLine BGA	672-Pin FineLine BGA	780-Pin FineLine BGA	1020-Pin FineLine BGA	1508-Pin FineLine BGA
EP2S15 to EP2S30	0 *(1)*	0			
EP2S15 to EP2S60	8 *(1)*	0			
EP2S30 to EP2S60	8 *(1)*	8			
EP2S60 to EP2S90				0	
EP2S60 to EP2S130				0	
EP2S60 to EP2S180				0	
EP2S90 to EP2S130			0 *(1)*	16	17
EP2S90 to EP2S180				16	0
EP2S130 to EP2S180				0	0

Note to Table 1–4:

(1) Some of the DQ/DQS pins are not migratable. Refer to the Quartus II software information messages for more detailed information.

To determine if your user I/O assignments are correct, run the I/O Assignment Analysis command in the Quartus II software (Processing > Start > Start I/O Assignment Analysis).

Refer to the *I/O Management* chapter in volume 2 of the *Quartus II Handbook* for more information on pin migration.

Stratix II devices are available in up to three speed grades, -3, -4, and -5, with -3 being the fastest. Table 1–5 shows Stratix II device speed-grade offerings.

Table 1–5. Stratix II Device Speed Grades

Device	Temperature Grade	484-Pin FineLine BGA	484-Pin Hybrid FineLine BGA	672-Pin FineLine BGA	780-Pin FineLine BGA	1,020-Pin FineLine BGA	1,508-Pin FineLine BGA
EP2S15	Commercial	-3, -4, -5		-3, -4, -5			
	Industrial	-4		-4			
EP2S30	Commercial	-3, -4, -5		-3, -4, -5			
	Industrial	-4		-4			
EP2S60	Commercial	-3, -4, -5		-3, -4, -5		-3, -4, -5	
	Industrial	-4		-4		-4	
EP2S90	Commercial		-4, -5		-4, -5	-3, -4, -5	-3, -4, -5
	Industrial					-4	-4
EP2S130	Commercial				-4, -5	-3, -4, -5	-3, -4, -5
	Industrial					-4	-4
EP2S180	Commercial					-3, -4, -5	-3, -4, -5
	Industrial					-4	-4

Document Revision History

Table 1–6 shows the revision history for this chapter.

Table 1–6. Document Revision History

Date and Document Version	Changes Made	Summary of Changes
May 2007, v4.2	Moved Document Revision History to the end of the chapter.	—
April 2006, v4.1	• Updated “Features” section. • Removed Note 4 from Table 1–2. • Updated Table 1–4.	—
December 2005, v4.0	• Updated Tables 1–2, 1–4, and 1–5. • Updated Figure 2–43.	—
July 2005, v3.1	• Added vertical migration information, including Table 1–4. • Updated Table 1–5.	—
May 2005, v3.0	• Updated “Features” section. • Updated Table 1–2.	—
March 2005, v2.1	Updated “Introduction” and “Features” sections.	—
January 2005, v2.0	Added note to Table 1–2.	—
October 2004, v1.2	Updated Tables 1–2, 1–3, and 1–5.	—
July 2004, v1.1	• Updated Tables 1–1 and 1–2. • Updated “Features” section.	—
February 2004, v1.0	Added document to the Stratix II Device Handbook.	—

2. Stratix II Architecture

SII51002-4.3

Functional Description

Stratix® II devices contain a two-dimensional row- and column-based architecture to implement custom logic. A series of column and row interconnects of varying length and speed provides signal interconnects between logic array blocks (LABs), memory block structures (M512 RAM, M4K RAM, and M-RAM blocks), and digital signal processing (DSP) blocks.

Each LAB consists of eight adaptive logic modules (ALMs). An ALM is the Stratix II device family's basic building block of logic providing efficient implementation of user logic functions. LABs are grouped into rows and columns across the device.

M512 RAM blocks are simple dual-port memory blocks with 512 bits plus parity (576 bits). These blocks provide dedicated simple dual-port or single-port memory up to 18-bits wide at up to 500 MHz. M512 blocks are grouped into columns across the device in between certain LABs.

M4K RAM blocks are true dual-port memory blocks with 4K bits plus parity (4,608 bits). These blocks provide dedicated true dual-port, simple dual-port, or single-port memory up to 36-bits wide at up to 550 MHz. These blocks are grouped into columns across the device in between certain LABs.

M-RAM blocks are true dual-port memory blocks with 512K bits plus parity (589,824 bits). These blocks provide dedicated true dual-port, simple dual-port, or single-port memory up to 144-bits wide at up to 420 MHz. Several M-RAM blocks are located individually in the device's logic array.

DSP blocks can implement up to either eight full-precision 9 × 9-bit multipliers, four full-precision 18 × 18-bit multipliers, or one full-precision 36 × 36-bit multiplier with add or subtract features. The DSP blocks support Q1.15 format rounding and saturation in the multiplier and accumulator stages. These blocks also contain shift registers for digital signal processing applications, including finite impulse response (FIR) and infinite impulse response (IIR) filters. DSP blocks are grouped into columns across the device and operate at up to 450 MHz.

Each Stratix II device I/O pin is fed by an I/O element (IOE) located at the end of LAB rows and columns around the periphery of the device. I/O pins support numerous single-ended and differential I/O standards. Each IOE contains a bidirectional I/O buffer and six registers for registering input, output, and output-enable signals. When used with dedicated clocks, these registers provide exceptional performance and interface support with external memory devices such as DDR and DDR2 SDRAM, RLDRAM II, and QDR II SRAM devices. High-speed serial interface channels with dynamic phase alignment (DPA) support data transfer at up to 1 Gbps using LVDS or HyperTransport™ technology I/O standards.

Figure 2–1 shows an overview of the Stratix II device.

Figure 2–1. Stratix II Block Diagram

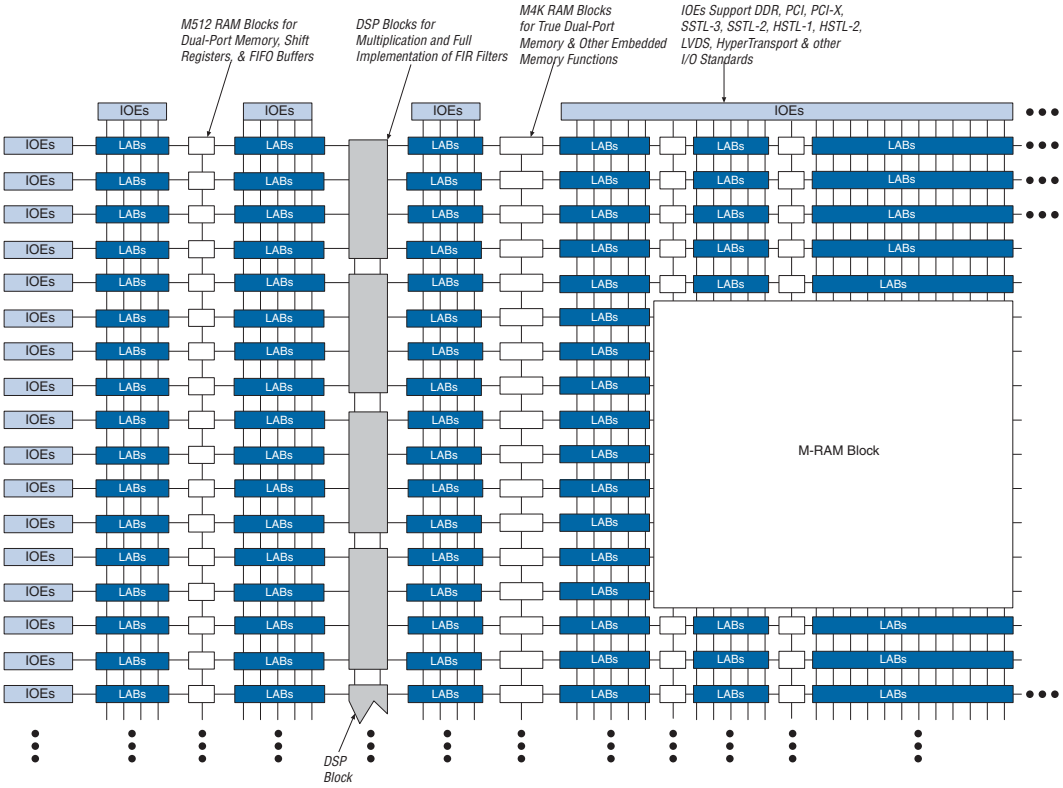

The number of M512 RAM, M4K RAM, and DSP blocks varies by device along with row and column numbers and M-RAM blocks. Table 2–1 lists the resources available in Stratix II devices.

Table 2–1. Stratix II Device Resources

Device	M512 RAM Columns/Blocks	M4K RAM Columns/Blocks	M-RAM Blocks	DSP Block Columns/Blocks	LAB Columns	LAB Rows
EP2S15	4 / 104	3 / 78	0	2 / 12	30	26
EP2S30	6 / 202	4 / 144	1	2 / 16	49	36
EP2S60	7 / 329	5 / 255	2	3 / 36	62	51
EP2S90	8 / 488	6 / 408	4	3 / 48	71	68
EP2S130	9 / 699	7 / 609	6	3 / 63	81	87
EP2S180	11 / 930	8 / 768	9	4 / 96	100	96

Logic Array Blocks

Each LAB consists of eight ALMs, carry chains, shared arithmetic chains, LAB control signals, local interconnect, and register chain connection lines. The local interconnect transfers signals between ALMs in the same LAB. Register chain connections transfer the output of an ALM register to the adjacent ALM register in an LAB. The Quartus® II Compiler places associated logic in an LAB or adjacent LABs, allowing the use of local, shared arithmetic chain, and register chain connections for performance and area efficiency. Figure 2–2 shows the Stratix II LAB structure.

Figure 2–2. Stratix II LAB Structure

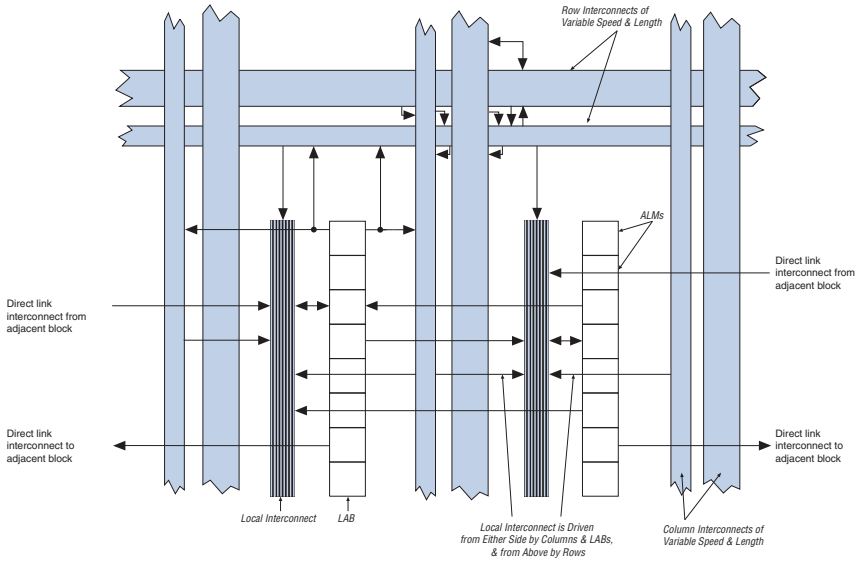

LAB Interconnects

The LAB local interconnect can drive ALMs in the same LAB. It is driven by column and row interconnects and ALM outputs in the same LAB. Neighboring LABs, M512 RAM blocks, M4K RAM blocks, M-RAM blocks, or DSP blocks from the left and right can also drive an LAB's local interconnect through the direct link connection. The direct link connection feature minimizes the use of row and column interconnects, providing higher performance and flexibility. Each ALM can drive 24 ALMs through fast local and direct link interconnects. Figure 2–3 shows the direct link connection.

Figure 2–3. Direct Link Connection

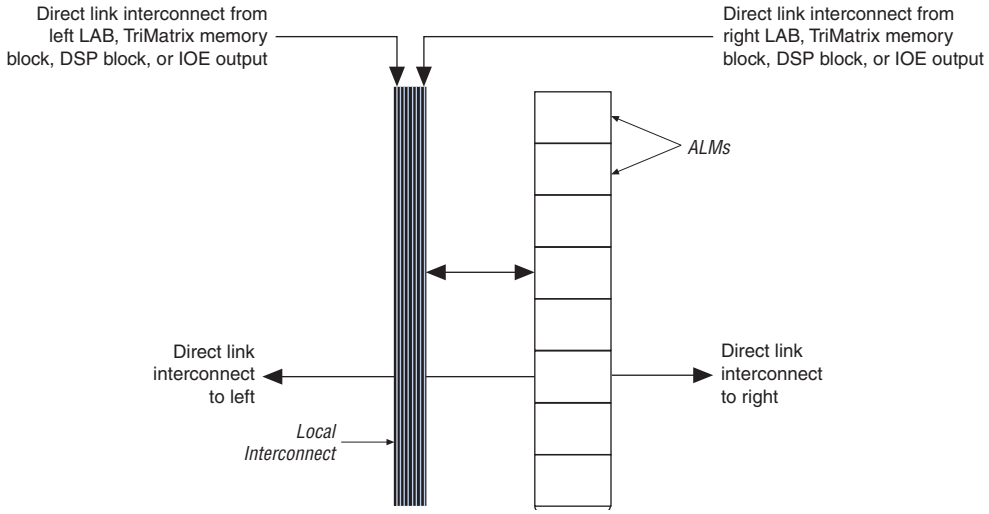

LAB Control Signals

Each LAB contains dedicated logic for driving control signals to its ALMs. The control signals include three clocks, three clock enables, two asynchronous clears, synchronous clear, asynchronous preset/load, and synchronous load control signals. This gives a maximum of 11 control signals at a time. Although synchronous load and clear signals are generally used when implementing counters, they can also be used with other functions.

Each LAB can use three clocks and three clock enable signals. However, there can only be up to two unique clocks per LAB, as shown in the LAB control signal generation circuit in Figure 2–4. Each LAB's clock and clock enable signals are linked. For example, any ALM in a particular LAB using the `labclk1` signal also uses `labclkena1`. If the LAB uses both the rising and falling edges of a clock, it also uses two LAB-wide clock signals. De-asserting the clock enable signal turns off the corresponding LAB-wide clock.

Each LAB can use two asynchronous clear signals and an asynchronous load/preset signal. By default, the Quartus II software uses a `NOT` gate push-back technique to achieve preset. If you disable the `NOT` gate push-up option or assign a given register to power up high using the Quartus II software, the preset is achieved using the asynchronous load

signal with asynchronous load data input tied high. When the asynchronous load/preset signal is used, the `labclkena0` signal is no longer available.

The LAB row clocks `[5..0]` and LAB local interconnect generate the LAB-wide control signals. The MultiTrack™ interconnect's inherent low skew allows clock and control signal distribution in addition to data. Figure 2–4 shows the LAB control signal generation circuit.

Figure 2–4. LAB-Wide Control Signals

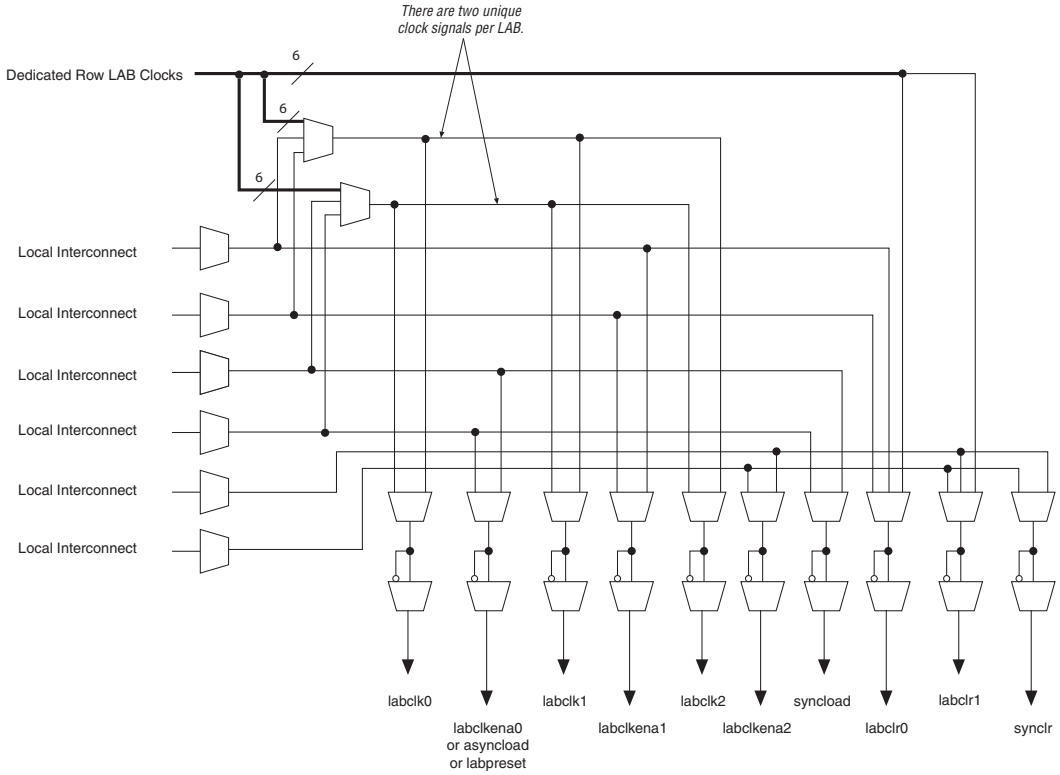

Adaptive Logic Modules

The basic building block of logic in the Stratix II architecture, the adaptive logic module (ALM), provides advanced features with efficient logic utilization. Each ALM contains a variety of look-up table (LUT)-based resources that can be divided between two adaptive LUTs (ALUTs). With up to eight inputs to the two ALUTs, one ALM can implement various combinations of two functions. This adaptability allows the ALM to be

completely backward-compatible with four-input LUT architectures. One ALM can also implement any function of up to six inputs and certain seven-input functions.

In addition to the adaptive LUT-based resources, each ALM contains two programmable registers, two dedicated full adders, a carry chain, a shared arithmetic chain, and a register chain. Through these dedicated resources, the ALM can efficiently implement various arithmetic functions and shift registers. Each ALM drives all types of interconnects: local, row, column, carry chain, shared arithmetic chain, register chain, and direct link interconnects. Figure 2–5 shows a high-level block diagram of the Stratix II ALM while Figure 2–6 shows a detailed view of all the connections in the ALM.

Figure 2–5. High-Level Block Diagram of the Stratix II ALM

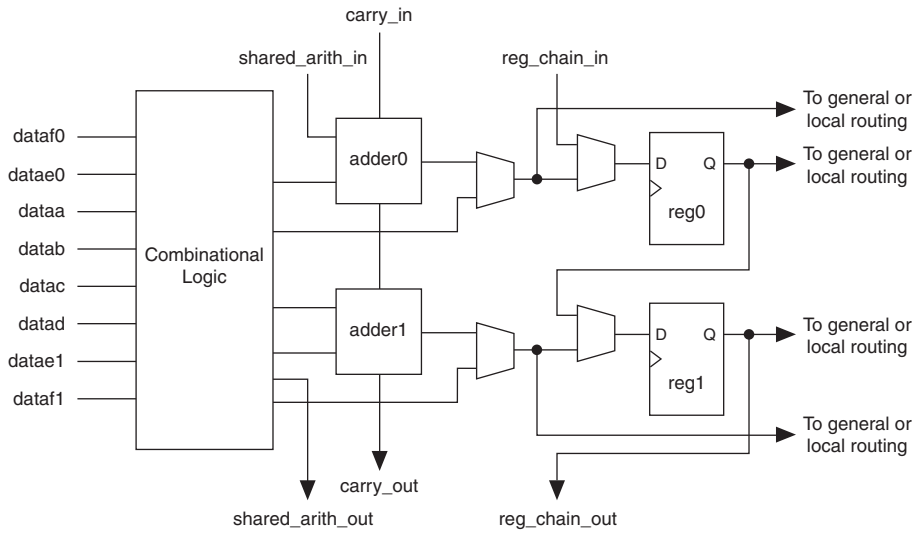

Figure 2–6. Stratix II ALM Details

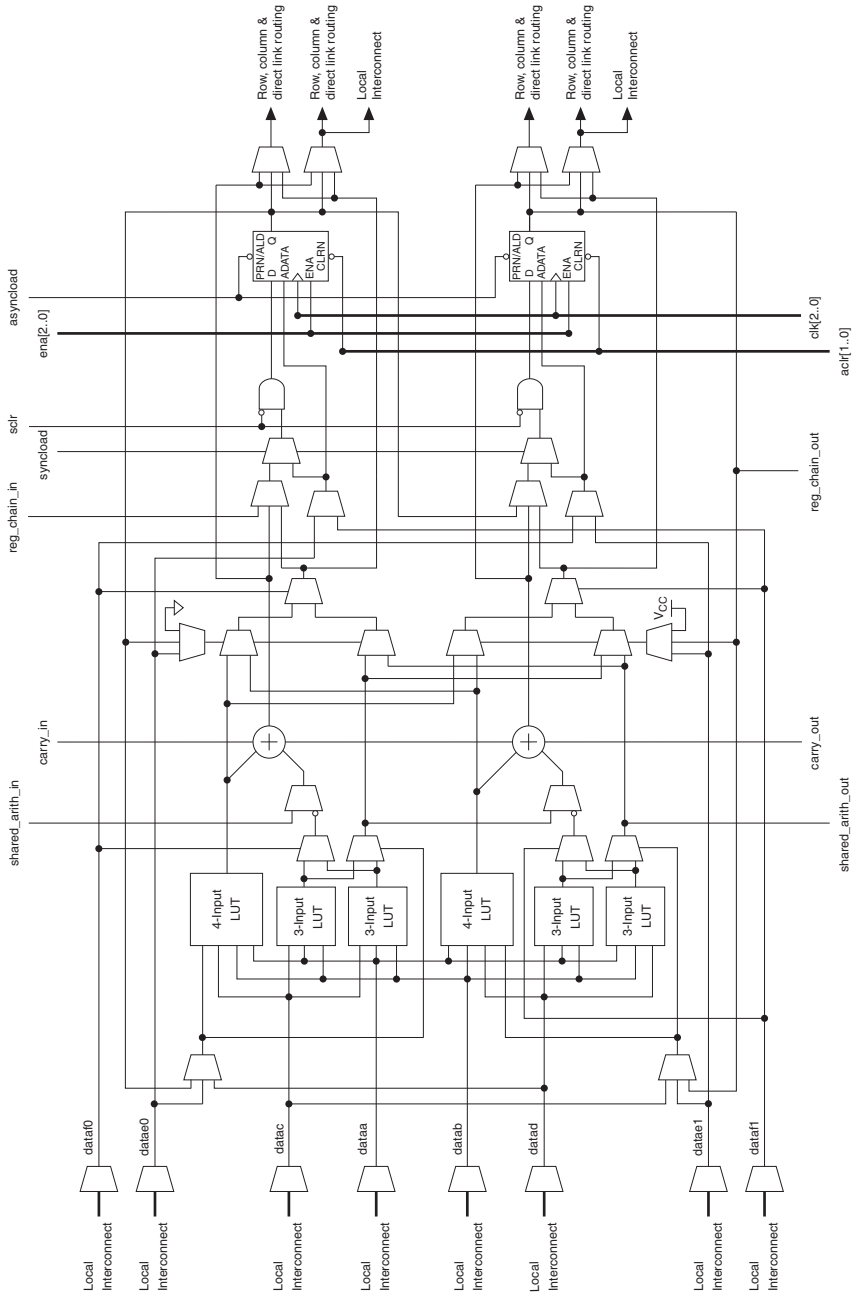

One ALM contains two programmable registers. Each register has data, clock, clock enable, synchronous and asynchronous clear, asynchronous load data, and synchronous and asynchronous load/preset inputs. Global signals, general-purpose I/O pins, or any internal logic can drive the register's clock and clear control signals. Either general-purpose I/O pins or internal logic can drive the clock enable, preset, asynchronous load, and asynchronous load data. The asynchronous load data input comes from the `datae` or `dataf` input of the ALM, which are the same inputs that can be used for register packing. For combinational functions, the register is bypassed and the output of the LUT drives directly to the outputs of the ALM.

Each ALM has two sets of outputs that drive the local, row, and column routing resources. The LUT, adder, or register output can drive these output drivers independently (see Figure 2–6). For each set of output drivers, two ALM outputs can drive column, row, or direct link routing connections, and one of these ALM outputs can also drive local interconnect resources. This allows the LUT or adder to drive one output while the register drives another output. This feature, called register packing, improves device utilization because the device can use the register and the combinational logic for unrelated functions. Another special packing mode allows the register output to feed back into the LUT of the same ALM so that the register is packed with its own fan-out LUT. This provides another mechanism for improved fitting. The ALM can also drive out registered and unregistered versions of the LUT or adder output.

See the *Performance & Logic Efficiency Analysis of Stratix II Devices White Paper* for more information on the efficiencies of the Stratix II ALM and comparisons with previous architectures.

ALM Operating Modes

The Stratix II ALM can operate in one of the following modes:

- Normal mode
- Extended LUT mode
- Arithmetic mode
- Shared arithmetic mode

Each mode uses ALM resources differently. In each mode, eleven available inputs to the ALM--the eight data inputs from the LAB local interconnect; `carry-in` from the previous ALM or LAB; the shared arithmetic chain connection from the previous ALM or LAB; and the register chain connection--are directed to different destinations to implement the desired logic function. LAB-wide signals provide clock, asynchronous clear, asynchronous preset/load, synchronous clear,

synchronous load, and clock enable control for the register. These LAB-wide signals are available in all ALM modes. See the "LAB Control Signals" section for more information on the LAB-wide control signals.

The Quartus II software and supported third-party synthesis tools, in conjunction with parameterized functions such as library of parameterized modules (LPM) functions, automatically choose the appropriate mode for common functions such as counters, adders, subtractors, and arithmetic functions. If required, you can also create special-purpose functions that specify which ALM operating mode to use for optimal performance.

Normal Mode

The normal mode is suitable for general logic applications and combinational functions. In this mode, up to eight data inputs from the LAB local interconnect are inputs to the combinational logic. The normal mode allows two functions to be implemented in one Stratix II ALM, or an ALM to implement a single function of up to six inputs. The ALM can support certain combinations of completely independent functions and various combinations of functions which have common inputs. Figure 2–7 shows the supported LUT combinations in normal mode.

Figure 2–7. ALM in Normal Mode *Note (1)*

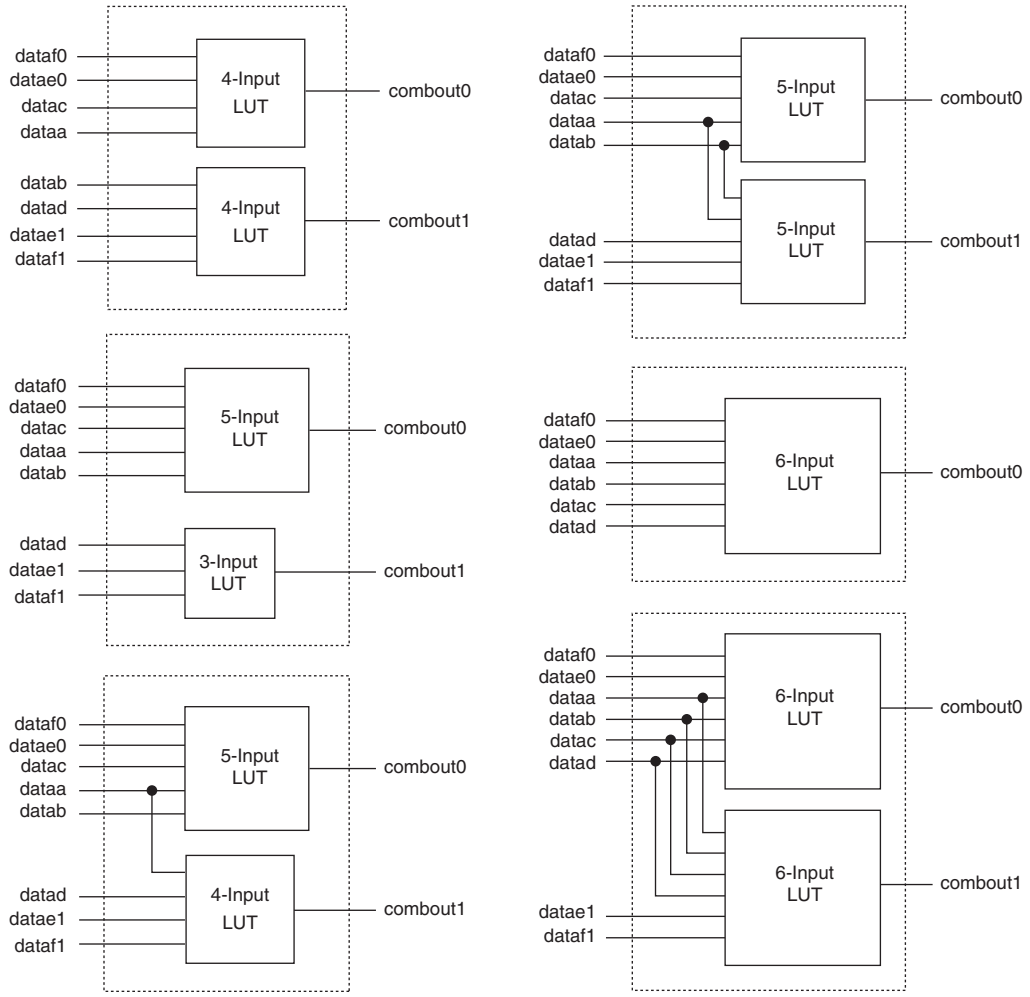

Note to Figure 2–7:

(1) Combinations of functions with fewer inputs than those shown are also supported. For example, combinations of functions with the following number of inputs are supported: 4 and 3, 3 and 3, 3 and 2, 5 and 2, etc.

The normal mode provides complete backward compatibility with four-input LUT architectures. Two independent functions of four inputs or less can be implemented in one Stratix II ALM. In addition, a five-input function and an independent three-input function can be implemented without sharing inputs.

For the packing of two five-input functions into one ALM, the functions must have at least two common inputs. The common inputs are `dataa` and `datab`. The combination of a four-input function with a five-input function requires one common input (either `dataa` or `datab`).

In the case of implementing two six-input functions in one ALM, four inputs must be shared and the combinational function must be the same. For example, a 4 × 2 crossbar switch (two 4-to-1 multiplexers with common inputs and unique select lines) can be implemented in one ALM, as shown in Figure 2–8. The shared inputs are `dataa`, `datab`, `datac`, and `datad`, while the unique select lines are `datae0` and `dataf0` for `function0`, and `datae1` and `dataf1` for `function1`. This crossbar switch consumes four LUTs in a four-input LUT-based architecture.

Figure 2–8. 4 × 2 Crossbar Switch Example

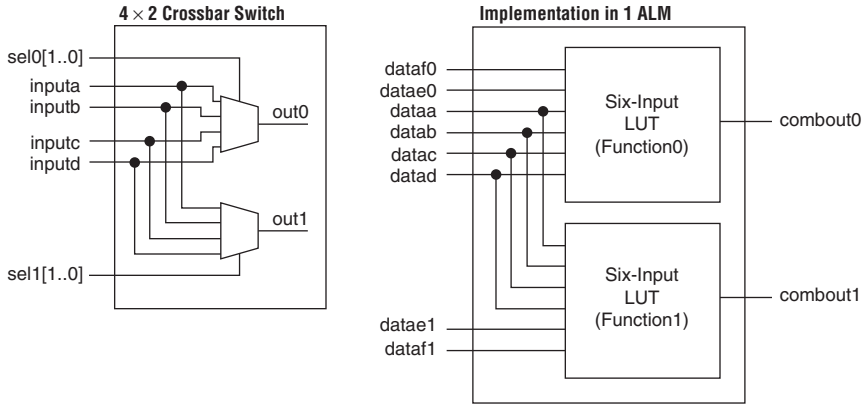

In a sparsely used device, functions that could be placed into one ALM may be implemented in separate ALMs. The Quartus II Compiler spreads a design out to achieve the best possible performance. As a device begins to fill up, the Quartus II software automatically utilizes the full potential of the Stratix II ALM. The Quartus II Compiler automatically searches for functions of common inputs or completely independent functions to be placed into one ALM and to make efficient use of the device resources. In addition, you can manually control resource usage by setting location assignments.

Any six-input function can be implemented utilizing inputs `dataa`, `datab`, `datac`, `datad`, and either `datae0` and `dataf0` or `datae1` and `dataf1`. If `datae0` and `dataf0` are utilized, the output is driven to `register0`, and/or `register0` is bypassed and the data drives out to the interconnect using the top set of output drivers (see Figure 2–9). If

datae1 and dataf1 are utilized, the output drives to register1 and/or bypasses register1 and drives to the interconnect using the bottom set of output drivers. The Quartus II Compiler automatically selects the inputs to the LUT. Asynchronous load data for the register comes from the datae or dataf input of the ALM. ALMs in normal mode support register packing.

Figure 2–9. 6-Input Function in Normal Mode *Notes (1), (2)*

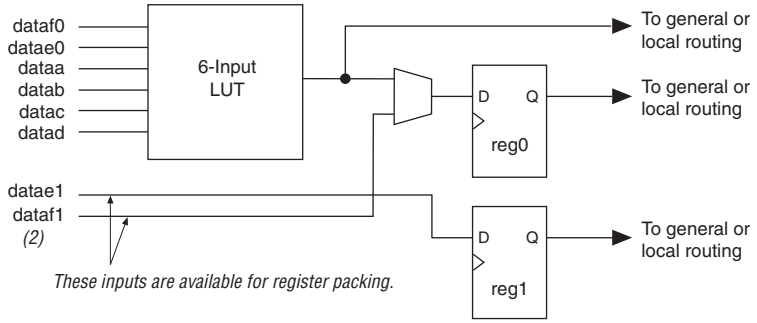

Notes to Figure 2–9:

(1) If datae1 and dataf1 are used as inputs to the six-input function, then datae0 and dataf0 are available for register packing.

(2) The dataf1 input is available for register packing only if the six-input function is un-registered.

Extended LUT Mode

The extended LUT mode is used to implement a specific set of seven-input functions. The set must be a 2-to-1 multiplexer fed by two arbitrary five-input functions sharing four inputs. Figure 2–10 shows the template of supported seven-input functions utilizing extended LUT mode. In this mode, if the seven-input function is unregistered, the unused eighth input is available for register packing.

Functions that fit into the template shown in Figure 2–10 occur naturally in designs. These functions often appear in designs as "if-else" statements in Verilog HDL or VHDL code.

Figure 2–10. Template for Supported Seven-Input Functions in Extended LUT Mode

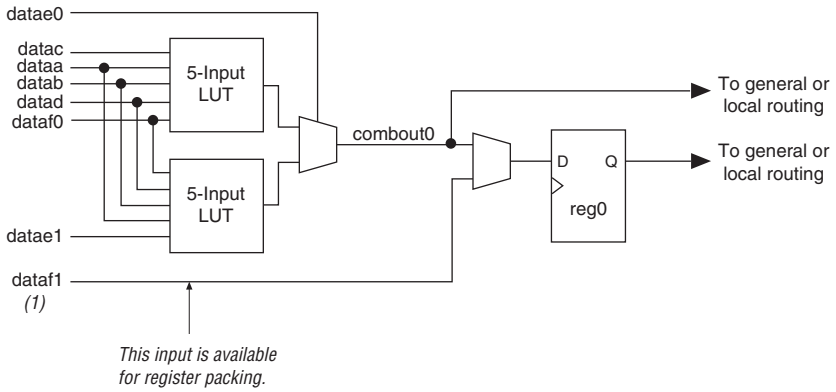

Note to Figure 2–10:

(1) If the seven-input function is unregistered, the unused eighth input is available for register packing. The second register, `reg1`, is not available.

Arithmetic Mode

The arithmetic mode is ideal for implementing adders, counters, accumulators, wide parity functions, and comparators. An ALM in arithmetic mode uses two sets of two four-input LUTs along with two dedicated full adders. The dedicated adders allow the LUTs to be available to perform pre-adder logic; therefore, each adder can add the output of two four-input functions. The four LUTs share the `dataa` and `datab` inputs. As shown in Figure 2–11, the carry-in signal feeds to `adder0`, and the carry-out from `adder0` feeds to carry-in of `adder1`. The carry-out from `adder1` drives to `adder0` of the next ALM in the LAB. ALMs in arithmetic mode can drive out registered and/or unregistered versions of the adder outputs.

Figure 2–11. ALM in Arithmetic Mode

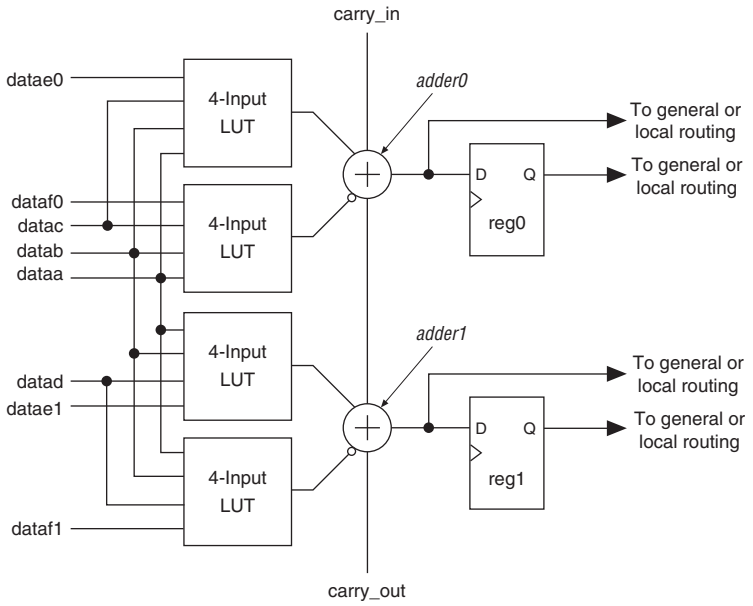

While operating in arithmetic mode, the ALM can support simultaneous use of the adder's carry output along with combinational logic outputs. In this operation, the adder output is ignored. This usage of the adder with the combinational logic output provides resource savings of up to 50% for functions that can use this ability. An example of such functionality is a conditional operation, such as the one shown in Figure 2–12. The equation for this example is:

$$R = (X < Y) ? Y : X$$

To implement this function, the adder is used to subtract 'Y' from 'X.' If 'X' is less than 'Y,' the `carry_out` signal is '1.' The `carry_out` signal is fed to an adder where it drives out to the LAB local interconnect. It then feeds to the LAB-wide `syncload` signal. When asserted, `syncload` selects the `syncdata` input. In this case, the data 'Y' drives the `syncdata` inputs to the registers. If 'X' is greater than or equal to 'Y,' the `syncload` signal is de-asserted and 'X' drives the data port of the registers.

Figure 2–12. Conditional Operation Example

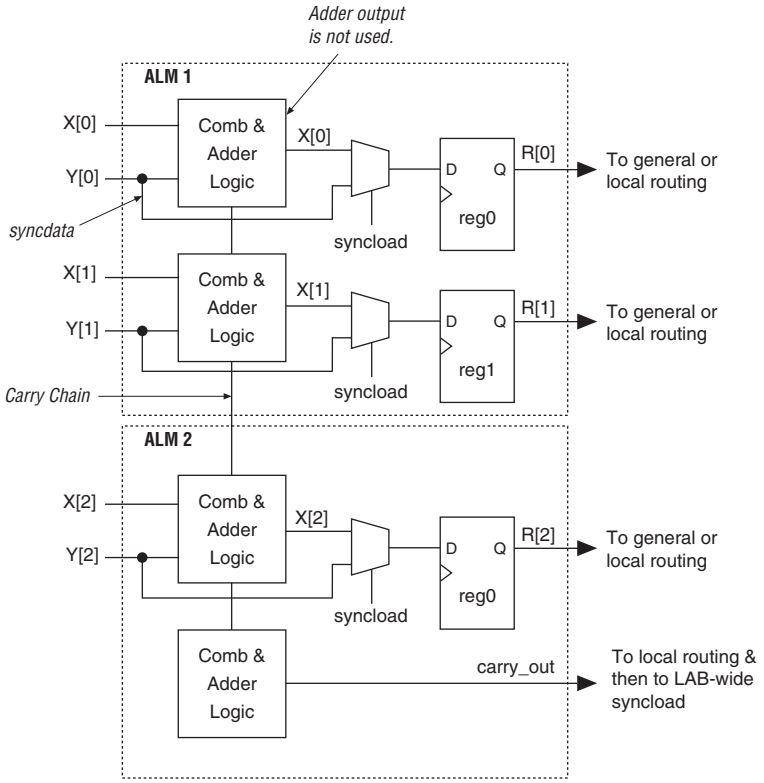

The arithmetic mode also offers clock enable, counter enable, synchronous up/down control, add/subtract control, synchronous clear, synchronous load. The LAB local interconnect data inputs generate the clock enable, counter enable, synchronous up/down and add/subtract control signals. These control signals are good candidates for the inputs that are shared between the four LUTs in the ALM. The synchronous clear and synchronous load options are LAB-wide signals that affect all registers in the LAB. The Quartus II software automatically places any registers that are not used by the counter into other LABs.

Carry Chain

The carry chain provides a fast carry function between the dedicated adders in arithmetic or shared arithmetic mode. Carry chains can begin in either the first ALM or the fifth ALM in an LAB. The final carry-out signal is routed to an ALM, where it is fed to local, row, or column interconnects.

The Quartus II Compiler automatically creates carry chain logic during design processing, or you can create it manually during design entry. Parameterized functions such as LPM functions automatically take advantage of carry chains for the appropriate functions.

The Quartus II Compiler creates carry chains longer than 16 (8 ALMs in arithmetic or shared arithmetic mode) by linking LABs together automatically. For enhanced fitting, a long carry chain runs vertically allowing fast horizontal connections to TriMatrix memory and DSP blocks. A carry chain can continue as far as a full column.

To avoid routing congestion in one small area of the device when a high fan-in arithmetic function is implemented, the LAB can support carry chains that only utilize either the top half or the bottom half of the LAB before connecting to the next LAB. This leaves the other half of the ALMs in the LAB available for implementing narrower fan-in functions in normal mode. Carry chains that use the top four ALMs in the first LAB carry into the top half of the ALMs in the next LAB within the column. Carry chains that use the bottom four ALMs in the first LAB carry into the bottom half of the ALMs in the next LAB within the column. Every other column of LABs is top-half bypassable, while the other LAB columns are bottom-half bypassable.

See the "MultiTrack Interconnect" on page 2–22 section for more information on carry chain interconnect.

Shared Arithmetic Mode

In shared arithmetic mode, the ALM can implement a three-input add. In this mode, the ALM is configured with four 4-input LUTs. Each LUT either computes the sum of three inputs or the carry of three inputs. The output of the carry computation is fed to the next adder (either to `adder1` in the same ALM or to `adder0` of the next ALM in the LAB) via a dedicated connection called the shared arithmetic chain. This shared arithmetic chain can significantly improve the performance of an adder tree by reducing the number of summation stages required to implement an adder tree. Figure 2–13 shows the ALM in shared arithmetic mode.

Figure 2–13. ALM in Shared Arithmetic Mode

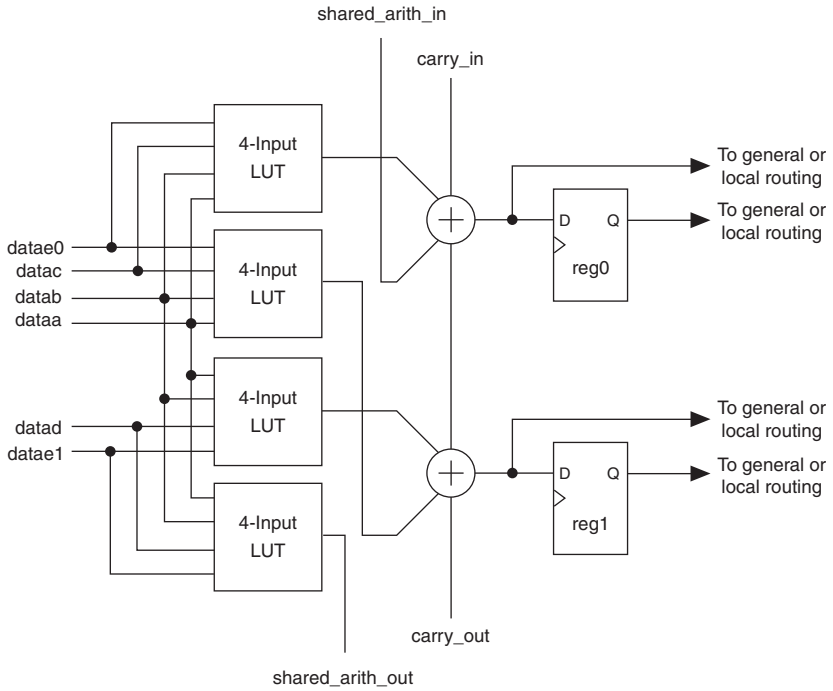

Note to Figure 2–13:
(1) Inputs `dataf0` and `dataf1` are available for register packing in shared arithmetic mode.

Adder trees can be found in many different applications. For example, the summation of the partial products in a logic-based multiplier can be implemented in a tree structure. Another example is a correlator function that can use a large adder tree to sum filtered data samples in a given time frame to recover or to de-spread data which was transmitted utilizing spread spectrum technology.

An example of a three-bit add operation utilizing the shared arithmetic mode is shown in Figure 2–14. The partial sum `(S[2..0])` and the partial carry `(C[2..0])` is obtained using the LUTs, while the result `(R[2..0])` is computed using the dedicated adders.

Figure 2–14. Example of a 3-bit Add Utilizing Shared Arithmetic Mode

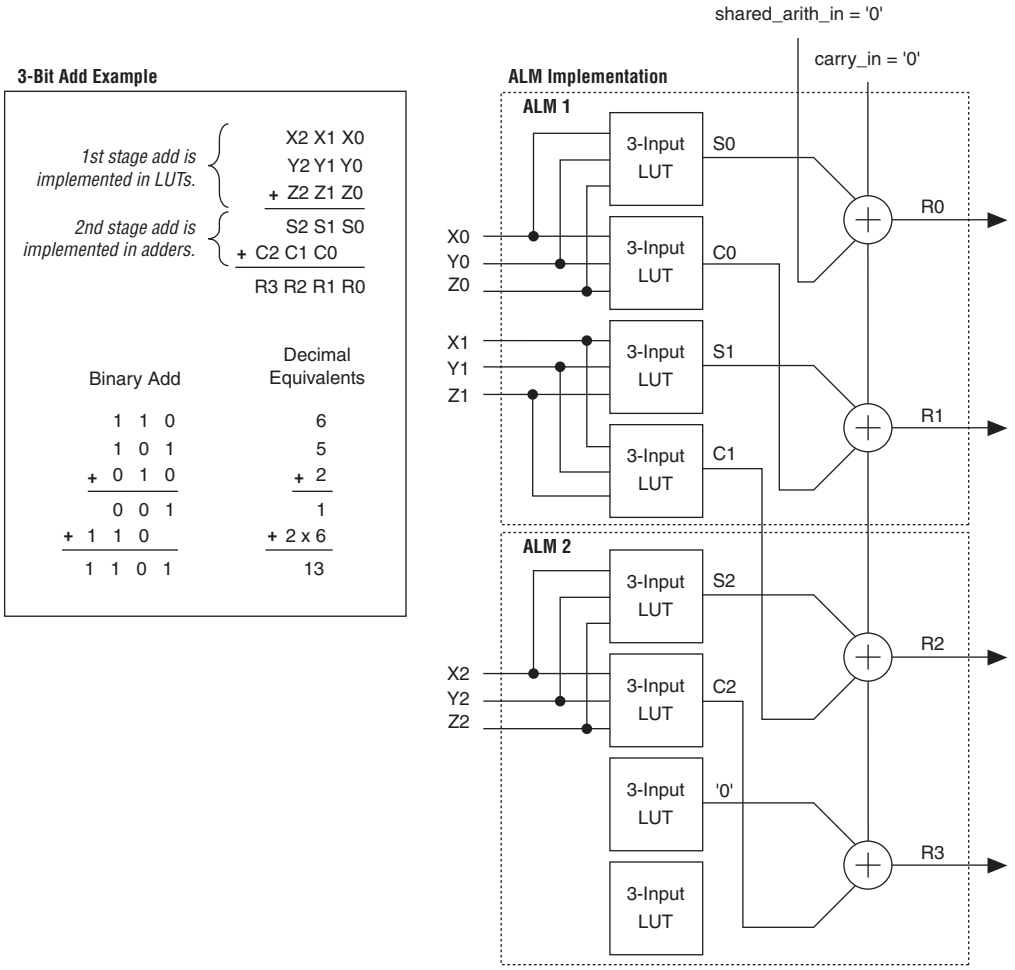

Shared Arithmetic Chain

In addition to the dedicated carry chain routing, the shared arithmetic chain available in shared arithmetic mode allows the ALM to implement a three-input add. This significantly reduces the resources necessary to implement large adder trees or correlator functions.

The shared arithmetic chains can begin in either the first or fifth ALM in an LAB. The Quartus II Compiler creates shared arithmetic chains longer than 16 (8 ALMs in arithmetic or shared arithmetic mode) by linking LABs together automatically. For enhanced fitting, a long shared

arithmetic chain runs vertically allowing fast horizontal connections to TriMatrix memory and DSP blocks. A shared arithmetic chain can continue as far as a full column.

Similar to the carry chains, the shared arithmetic chains are also top- or bottom-half bypassable. This capability allows the shared arithmetic chain to cascade through half of the ALMs in a LAB while leaving the other half available for narrower fan-in functionality. Every other LAB column is top-half bypassable, while the other LAB columns are bottom-half bypassable.

See the "MultiTrack Interconnect" on page 2–22 section for more information on shared arithmetic chain interconnect.

Register Chain

In addition to the general routing outputs, the ALMs in an LAB have register chain outputs. The register chain routing allows registers in the same LAB to be cascaded together. The register chain interconnect allows an LAB to use LUTs for a single combinational function and the registers to be used for an unrelated shift register implementation. These resources speed up connections between ALMs while saving local interconnect resources (see Figure 2–15). The Quartus II Compiler automatically takes advantage of these resources to improve utilization and performance.

Figure 2–15. Register Chain within an LAB *Note (1)*

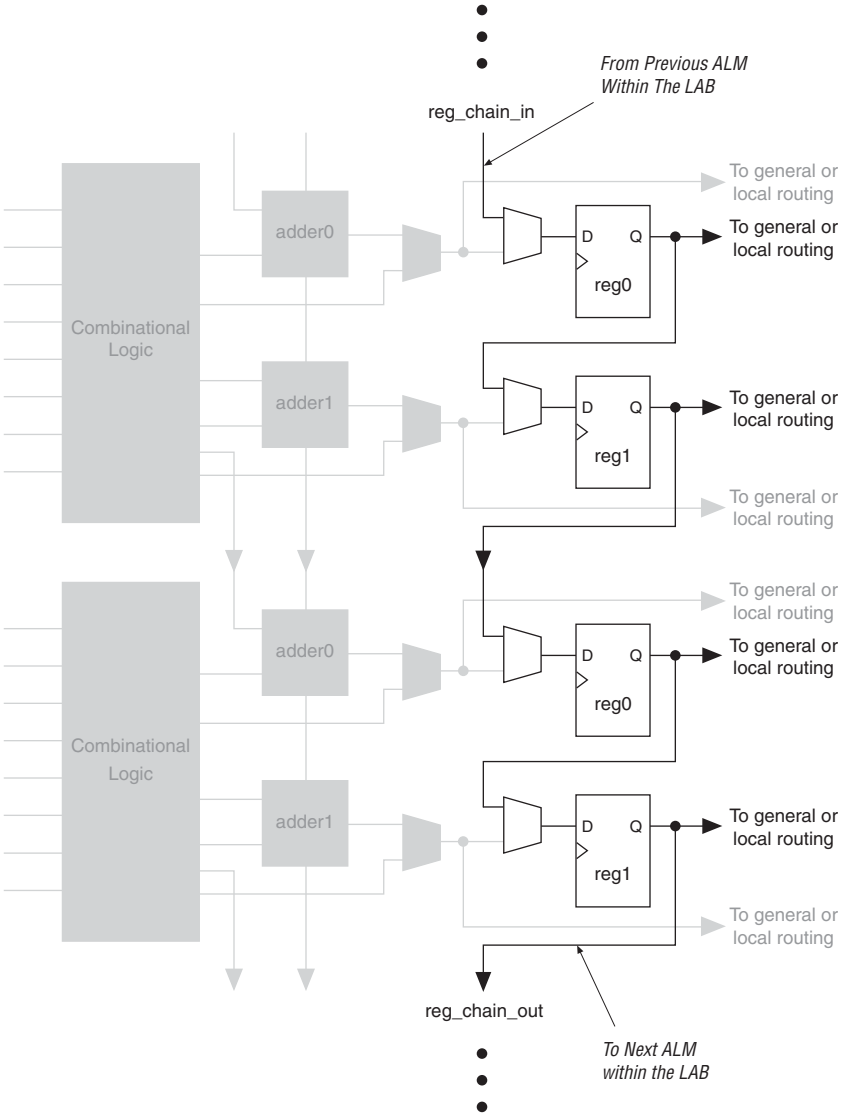

Note to Figure 2–15:
(1) The combinational or adder logic can be utilized to implement an unrelated, un-registered function.

See the "MultiTrack Interconnect" on page 2–22 section for more information on register chain interconnect.

Clear & Preset Logic Control

LAB-wide signals control the logic for the register's clear and load/preset signals. The ALM directly supports an asynchronous clear and preset function. The register preset is achieved through the asynchronous load of a logic high. The direct asynchronous preset does not require a NOT-gate push-back technique. Stratix II devices support simultaneous asynchronous load/preset, and clear signals. An asynchronous clear signal takes precedence if both signals are asserted simultaneously. Each LAB supports up to two clears and one load/preset signal.

In addition to the clear and load/preset ports, Stratix II devices provide a device-wide reset pin (`DEV_CLRn`) that resets all registers in the device. An option set before compilation in the Quartus II software controls this pin. This device-wide reset overrides all other control signals.

MultiTrack Interconnect

In the Stratix II architecture, connections between ALMs, TriMatrix memory, DSP blocks, and device I/O pins are provided by the MultiTrack interconnect structure with DirectDrive™ technology. The MultiTrack interconnect consists of continuous, performance-optimized routing lines of different lengths and speeds used for inter- and intra-design block connectivity. The Quartus II Compiler automatically places critical design paths on faster interconnects to improve design performance.

DirectDrive technology is a deterministic routing technology that ensures identical routing resource usage for any function regardless of placement in the device. The MultiTrack interconnect and DirectDrive technology simplify the integration stage of block-based designing by eliminating the re-optimization cycles that typically follow design changes and additions.

The MultiTrack interconnect consists of row and column interconnects that span fixed distances. A routing structure with fixed length resources for all devices allows predictable and repeatable performance when migrating through different device densities. Dedicated row interconnects route signals to and from LABs, DSP blocks, and TriMatrix memory in the same row. These row resources include:

- Direct link interconnects between LABs and adjacent blocks
- R4 interconnects traversing four blocks to the right or left
- R24 row interconnects for high-speed access across the length of the device

The direct link interconnect allows an LAB, DSP block, or TriMatrix memory block to drive into the local interconnect of its left and right neighbors and then back into itself. This provides fast communication between adjacent LABs and/or blocks without using row interconnect resources.

The R4 interconnects span four LABs, three LABs and one M512 RAM block, two LABs and one M4K RAM block, or two LABs and one DSP block to the right or left of a source LAB. These resources are used for fast row connections in a four-LAB region. Every LAB has its own set of R4 interconnects to drive either left or right. Figure 2–16 shows R4 interconnect connections from an LAB. R4 interconnects can drive and be driven by DSP blocks and RAM blocks and row IOEs. For LAB interfacing, a primary LAB or LAB neighbor can drive a given R4 interconnect. For R4 interconnects that drive to the right, the primary LAB and right neighbor can drive on to the interconnect. For R4 interconnects that drive to the left, the primary LAB and its left neighbor can drive on to the interconnect. R4 interconnects can drive other R4 interconnects to extend the range of LABs they can drive. R4 interconnects can also drive C4 and C16 interconnects for connections from one row to another. Additionally, R4 interconnects can drive R24 interconnects.

Figure 2–16. R4 Interconnect Connections *Notes (1), (2), (3)*

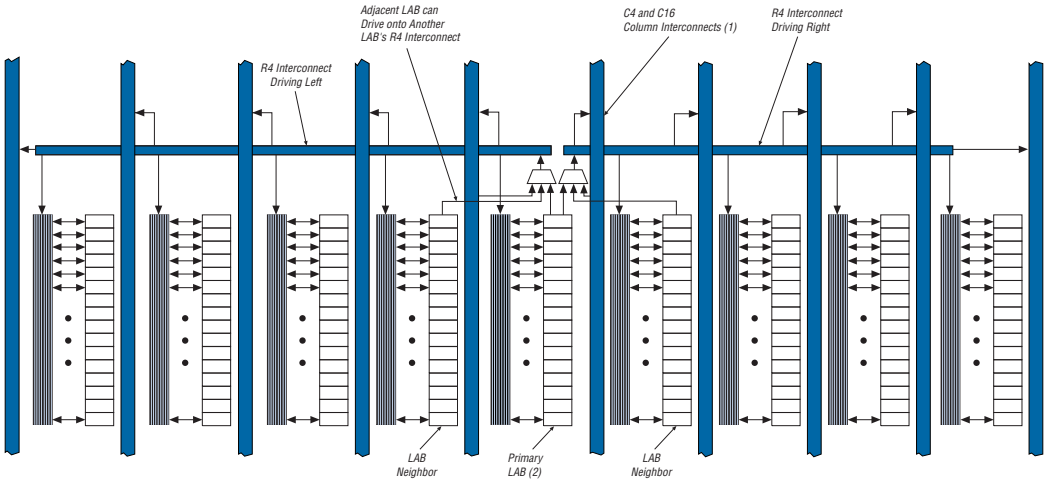

Notes to Figure 2–16:

(1) C4 and C16 interconnects can drive R4 interconnects.

(2) This pattern is repeated for every LAB in the LAB row.

(3) The LABs in Figure 2–16 show the 16 possible logical outputs per LAB.

R24 row interconnects span 24 LABs and provide the fastest resource for long row connections between LABs, TriMatrix memory, DSP blocks, and Row IOEs. The R24 row interconnects can cross M-RAM blocks. R24 row interconnects drive to other row or column interconnects at every fourth LAB and do not drive directly to LAB local interconnects. R24 row interconnects drive LAB local interconnects via R4 and C4 interconnects. R24 interconnects can drive R24, R4, C16, and C4 interconnects.

The column interconnect operates similarly to the row interconnect and vertically routes signals to and from LABs, TriMatrix memory, DSP blocks, and IOEs. Each column of LABs is served by a dedicated column interconnect. These column resources include:

- Shared arithmetic chain interconnects in an LAB
- Carry chain interconnects in an LAB and from LAB to LAB
- Register chain interconnects in an LAB
- C4 interconnects traversing a distance of four blocks in up and down direction
- C16 column interconnects for high-speed vertical routing through the device

Stratix II devices include an enhanced interconnect structure in LABs for routing shared arithmetic chains and carry chains for efficient arithmetic functions. The register chain connection allows the register output of one ALM to connect directly to the register input of the next ALM in the LAB for fast shift registers. These ALM to ALM connections bypass the local interconnect. The Quartus II Compiler automatically takes advantage of these resources to improve utilization and performance. Figure 2–17 shows the shared arithmetic chain, carry chain and register chain interconnects.

Figure 2–17. Shared Arithmetic Chain, Carry Chain & Register Chain Interconnects

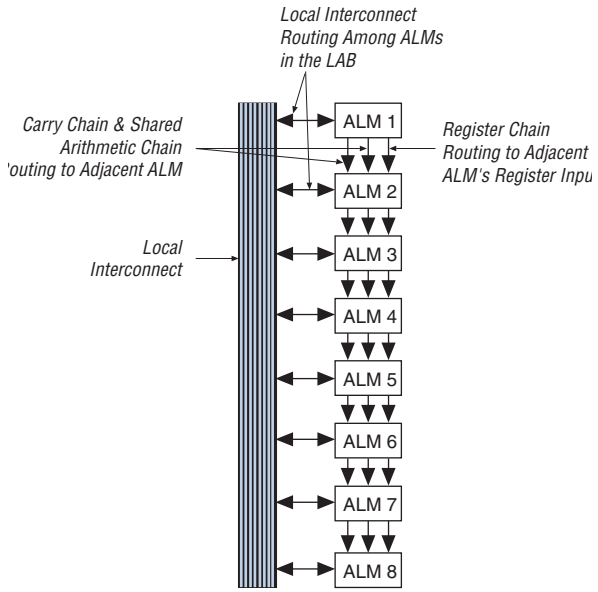

The C4 interconnects span four LABs, M512, or M4K blocks up or down from a source LAB. Every LAB has its own set of C4 interconnects to drive either up or down. Figure 2–18 shows the C4 interconnect connections from an LAB in a column. The C4 interconnects can drive and be driven by all types of architecture blocks, including DSP blocks, TriMatrix memory blocks, and column and row IOEs. For LAB interconnection, a primary LAB or its LAB neighbor can drive a given C4 interconnect. C4 interconnects can drive each other to extend their range as well as drive row interconnects for column-to-column connections.

Figure 2–18. C4 Interconnect Connections *Note (1)*

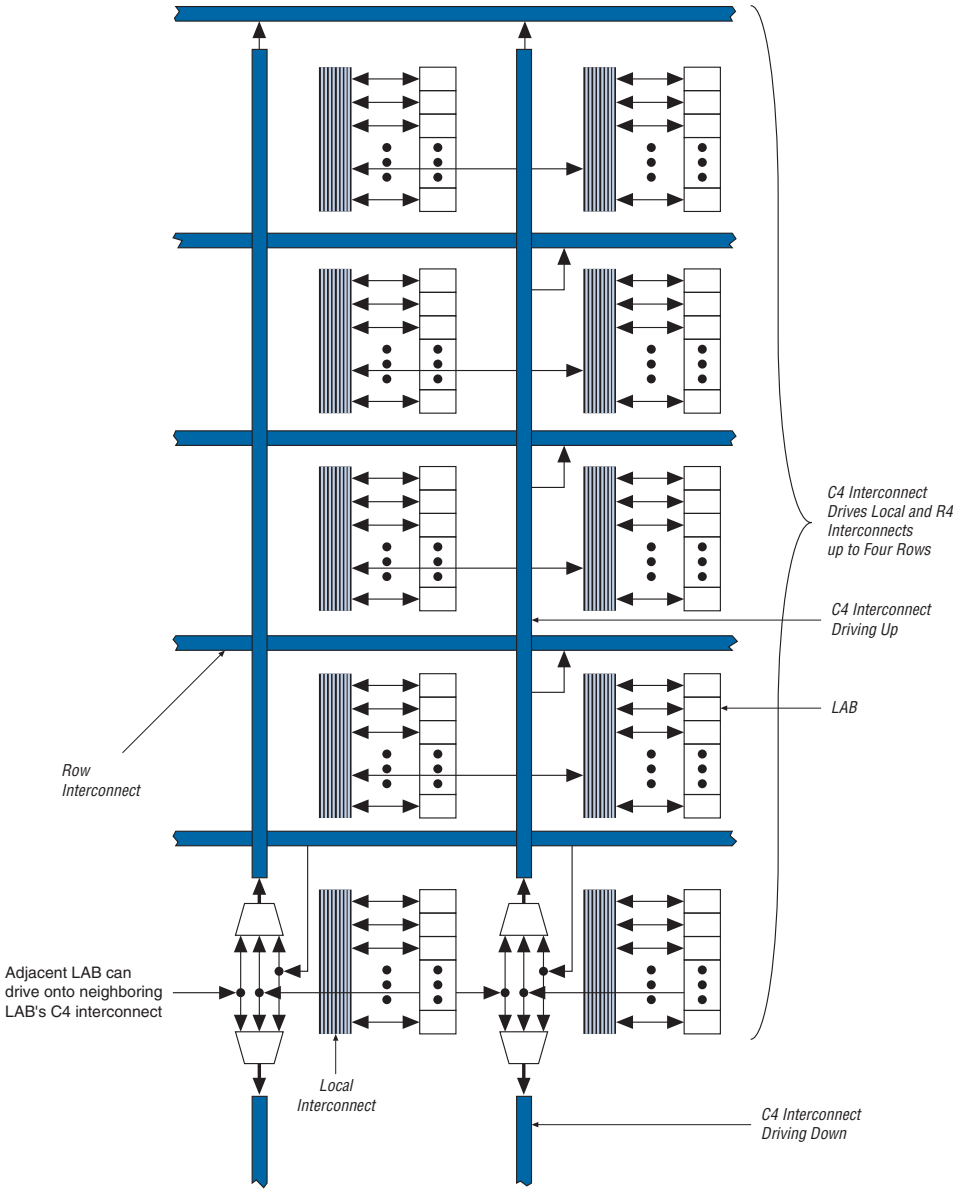

Note to Figure 2–18:

(1) Each C4 interconnect can drive either up or down four rows.

C16 column interconnects span a length of 16 LABs and provide the fastest resource for long column connections between LABs, TriMatrix memory blocks, DSP blocks, and IOEs. C16 interconnects can cross M-RAM blocks and also drive to row and column interconnects at every fourth LAB. C16 interconnects drive LAB local interconnects via C4 and R4 interconnects and do not drive LAB local interconnects directly.

All embedded blocks communicate with the logic array similar to LAB-to-LAB interfaces. Each block (that is, TriMatrix memory and DSP blocks) connects to row and column interconnects and has local interconnect regions driven by row and column interconnects. These blocks also have direct link interconnects for fast connections to and from a neighboring LAB. All blocks are fed by the row LAB clocks, `labclk[5..0]`.

Table 2–2 shows the Stratix II device's routing scheme.

Table 2–2. Stratix II Device Routing Scheme (Part 1 of 2)

Source	Destination															
	Shared Arithmetic Chain	Carry Chain	Register Chain	Local Interconnect	Direct Link Interconnect	R4 Interconnect	R24 Interconnect	C4 Interconnect	C16 Interconnect	ALM	M512 RAM Block	M4K RAM Block	M-RAM Block	DSP Blocks	Column IOE	Row IOE
Shared arithmetic chain										✓						
Carry chain										✓						
Register chain										✓						
Local interconnect										✓	✓	✓	✓	✓	✓	✓
Direct link interconnect				✓												
R4 interconnect				✓		✓	✓	✓	✓							
R24 interconnect						✓	✓	✓	✓							
C4 interconnect				✓		✓		✓								
C16 interconnect						✓	✓	✓	✓							
ALM	✓	✓	✓	✓	✓	✓		✓								
M512 RAM block				✓	✓	✓		✓								
M4K RAM block				✓	✓	✓		✓								
M-RAM block					✓	✓	✓	✓								
DSP blocks					✓	✓		✓								

Table 2–2. Stratix II Device Routing Scheme (Part 2 of 2)

Source	Destination															
	Shared Arithmetic Chain	Carry Chain	Register Chain	Local Interconnect	Direct Link Interconnect	R4 Interconnect	R24 Interconnect	C4 Interconnect	C16 Interconnect	ALM	M512 RAM Block	M4K RAM Block	M-RAM Block	DSP Blocks	Column IOE	Row IOE
Column IOE					✓			✓	✓							
Row IOE					✓	✓	✓	✓								

TriMatrix Memory

TriMatrix memory consists of three types of RAM blocks: M512, M4K, and M-RAM. Although these memory blocks are different, they can all implement various types of memory with or without parity, including true dual-port, simple dual-port, and single-port RAM, ROM, and FIFO buffers. Table 2–3 shows the size and features of the different RAM blocks.

Table 2–3. TriMatrix Memory Features (Part 1 of 2)

Memory Feature	M512 RAM Block (32 × 18 Bits)	M4K RAM Block (128 × 36 Bits)	M-RAM Block (4K × 144 Bits)
Maximum performance	500 MHz	550 MHz	420 MHz
True dual-port memory		✓	✓
Simple dual-port memory	✓	✓	✓
Single-port memory	✓	✓	✓
Shift register	✓	✓	
ROM	✓	✓	*(1)*
FIFO buffer	✓	✓	✓
Pack mode		✓	✓
Byte enable	✓	✓	✓
Address clock enable		✓	✓
Parity bits	✓	✓	✓
Mixed clock mode	✓	✓	✓
Memory initialization (**.mif**)	✓	✓	

Table 2–3. TriMatrix Memory Features (Part 2 of 2)

Memory Feature	M512 RAM Block (32 × 18 Bits)	M4K RAM Block (128 × 36 Bits)	M-RAM Block (4K × 144 Bits)
Simple dual-port memory mixed width support	✓	✓	✓
True dual-port memory mixed width support		✓	✓
Power-up conditions	Outputs cleared	Outputs cleared	Outputs unknown
Register clears	Output registers	Output registers	Output registers
Mixed-port read-during-write	Unknown output/old data	Unknown output/old data	Unknown output
Configurations	512 × 1 256 × 2 128 × 4 64 × 8 64 × 9 32 × 16 32 × 18	4K × 1 2K × 2 1K × 4 512 × 8 512 × 9 256 × 16 256 × 18 128 × 32 128 × 36	64K × 8 64K × 9 32K × 16 32K × 18 16K × 32 16K × 36 8K × 64 8K × 72 4K × 128 4K × 144

Notes to Table 2–3:

(1) The M-RAM block does not support memory initializations. However, the M-RAM block can emulate a ROM function using a dual-port RAM bock. The Stratix II device must write to the dual-port memory once and then disable the write-enable ports afterwards.

Memory Block Size

TriMatrix memory provides three different memory sizes for efficient application support. The Quartus II software automatically partitions the user-defined memory into the embedded memory blocks using the most efficient size combinations. You can also manually assign the memory to a specific block size or a mixture of block sizes.

When applied to input registers, the asynchronous clear signal for the TriMatrix embedded memory immediately clears the input registers. However, the output of the memory block does not show the effects until the next clock edge. When applied to output registers, the asynchronous clear signal clears the output registers and the effects are seen immediately.

M512 RAM Block

The M512 RAM block is a simple dual-port memory block and is useful for implementing small FIFO buffers, DSP, and clock domain transfer applications. Each block contains 576 RAM bits (including parity bits). M512 RAM blocks can be configured in the following modes:

- Simple dual-port RAM
- Single-port RAM
- FIFO
- ROM
- Shift register

Violating the setup or hold time on the memory block address registers could corrupt memory contents. This applies to both read and write operations.

When configured as RAM or ROM, you can use an initialization file to pre-load the memory contents.

M512 RAM blocks can have different clocks on its inputs and outputs. The wren, datain, and write address registers are all clocked together from one of the two clocks feeding the block. The read address, rden, and output registers can be clocked by either of the two clocks driving the block. This allows the RAM block to operate in read/write or input/output clock modes. Only the output register can be bypassed. The six `labclk` signals or local interconnect can drive the `inclock`, `outclock`, `wren`, `rden`, and `outclr` signals. Because of the advanced interconnect between the LAB and M512 RAM blocks, ALMs can also control the `wren` and `rden` signals and the RAM clock, clock enable, and asynchronous clear signals. Figure 2–19 shows the M512 RAM block control signal generation logic.

The RAM blocks in Stratix II devices have local interconnects to allow ALMs and interconnects to drive into RAM blocks. The M512 RAM block local interconnect is driven by the R4, C4, and direct link interconnects from adjacent LABs. The M512 RAM blocks can communicate with LABs on either the left or right side through these row interconnects or with LAB columns on the left or right side with the column interconnects. The M512 RAM block has up to 16 direct link input connections from the left adjacent LABs and another 16 from the right adjacent LAB. M512 RAM outputs can also connect to left and right LABs through direct link interconnect. The M512 RAM block has equal opportunity for access and performance to and from LABs on either its left or right side. Figure 2–20 shows the M512 RAM block to logic array interface.

Figure 2–19. M512 RAM Block Control Signals

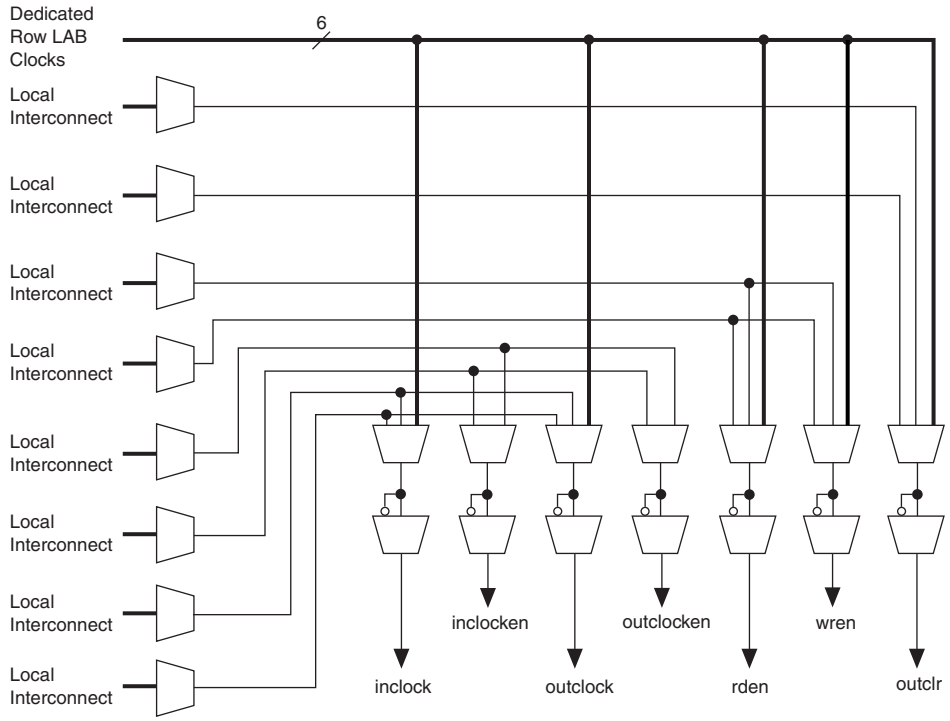

Figure 2–20. M512 RAM Block LAB Row Interface

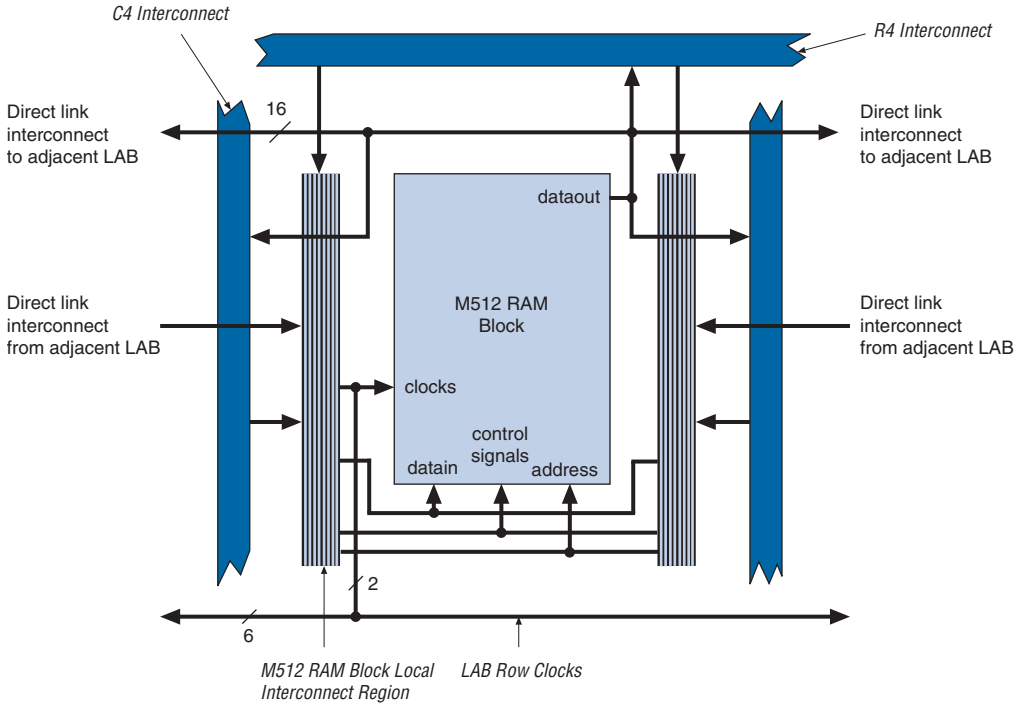

M4K RAM Blocks

The M4K RAM block includes support for true dual-port RAM. The M4K RAM block is used to implement buffers for a wide variety of applications such as storing processor code, implementing lookup schemes, and implementing larger memory applications. Each block contains 4,608 RAM bits (including parity bits). M4K RAM blocks can be configured in the following modes:

- True dual-port RAM
- Simple dual-port RAM
- Single-port RAM
- FIFO
- ROM
- Shift register

When configured as RAM or ROM, you can use an initialization file to pre-load the memory contents.

The M4K RAM blocks allow for different clocks on their inputs and outputs. Either of the two clocks feeding the block can clock M4K RAM block registers (renwe, address, byte enable, datain, and output registers). Only the output register can be bypassed. The six `labclk` signals or local interconnects can drive the control signals for the A and B ports of the M4K RAM block. ALMs can also control the `clock_a`, `clock_b`, `renwe_a`, `renwe_b`, `clr_a`, `clr_b`, `clocken_a`, and `clocken_b` signals, as shown in Figure 2–21.

The R4, C4, and direct link interconnects from adjacent LABs drive the M4K RAM block local interconnect. The M4K RAM blocks can communicate with LABs on either the left or right side through these row resources or with LAB columns on either the right or left with the column resources. Up to 16 direct link input connections to the M4K RAM Block are possible from the left adjacent LABs and another 16 possible from the right adjacent LAB. M4K RAM block outputs can also connect to left and right LABs through direct link interconnect. Figure 2–22 shows the M4K RAM block to logic array interface.

Figure 2–21. M4K RAM Block Control Signals

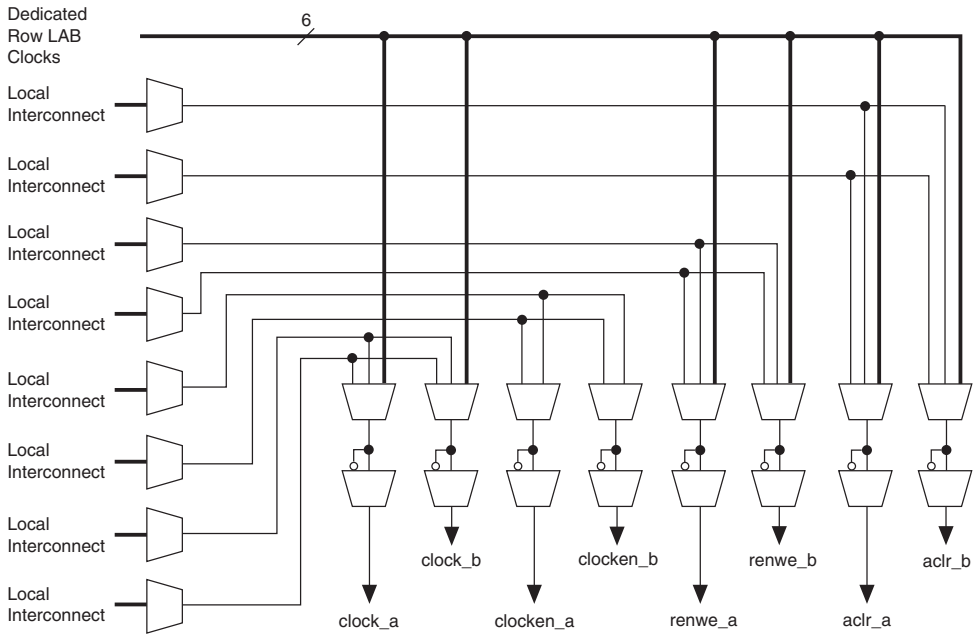

Figure 2–22. M4K RAM Block LAB Row Interface

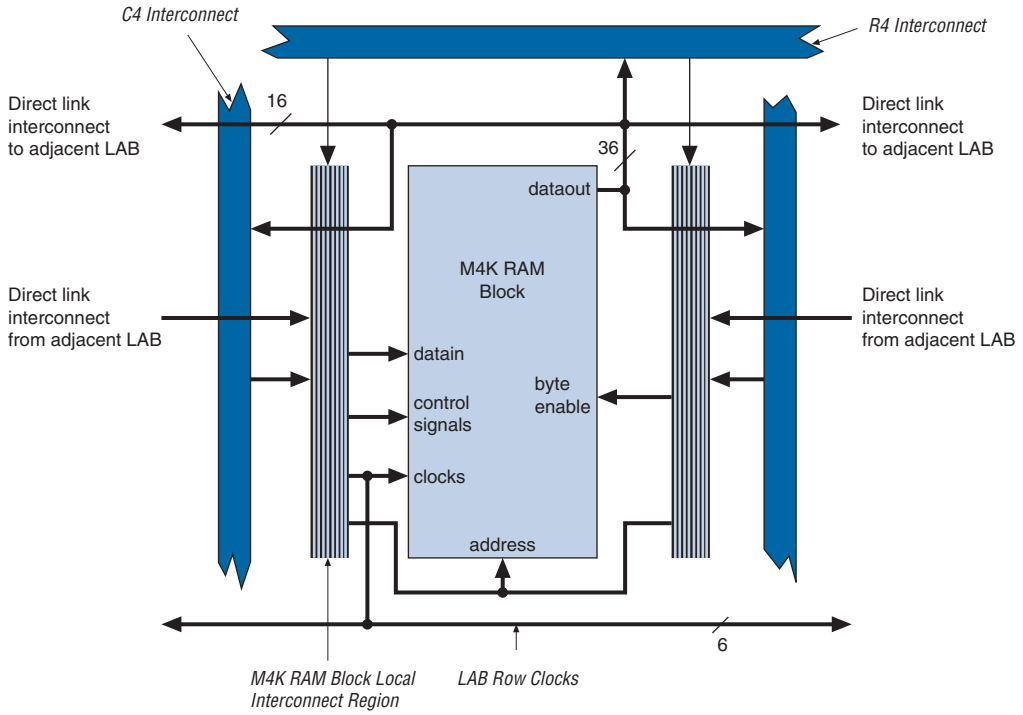

M-RAM Block

The largest TriMatrix memory block, the M-RAM block, is useful for applications where a large volume of data must be stored on-chip. Each block contains 589,824 RAM bits (including parity bits). The M-RAM block can be configured in the following modes:

- True dual-port RAM
- Simple dual-port RAM
- Single-port RAM
- FIFO

You cannot use an initialization file to initialize the contents of an M-RAM block. All M-RAM block contents power up to an undefined value. Only synchronous operation is supported in the M-RAM block, so all inputs are registered. Output registers can be bypassed.

Similar to all RAM blocks, M-RAM blocks can have different clocks on their inputs and outputs. Either of the two clocks feeding the block can clock M-RAM block registers (renwe, address, byte enable, datain, and output registers). The output register can be bypassed. The six `labclk` signals or local interconnect can drive the control signals for the A and B ports of the M-RAM block. ALMs can also control the `clock_a`, `clock_b`, `renwe_a`, `renwe_b`, `clr_a`, `clr_b`, `clocken_a`, and `clocken_b` signals as shown in Figure 2–23.

Figure 2–23. M-RAM Block Control Signals

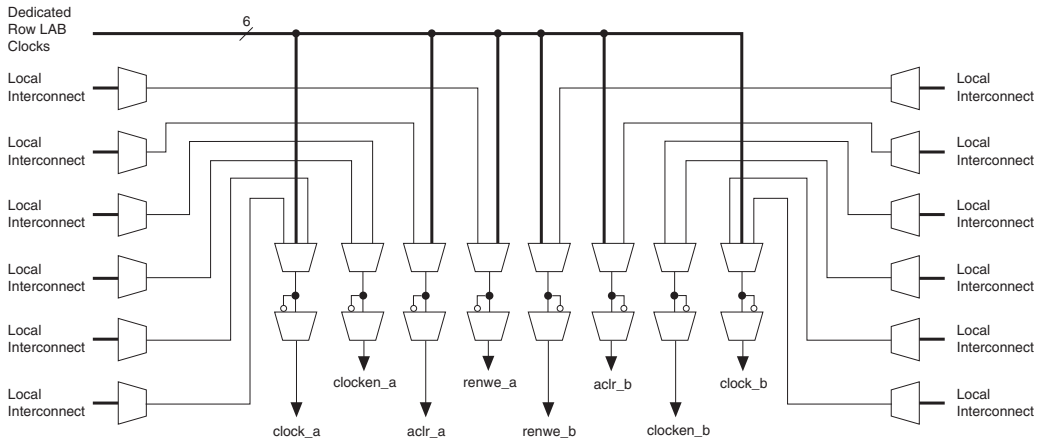

The R4, R24, C4, and direct link interconnects from adjacent LABs on either the right or left side drive the M-RAM block local interconnect. Up to 16 direct link input connections to the M-RAM block are possible from the left adjacent LABs and another 16 possible from the right adjacent LAB. M-RAM block outputs can also connect to left and right LABs through direct link interconnect. Figure 2–24 shows an example floorplan for the EP2S130 device and the location of the M-RAM interfaces. Figures 2–25 and 2–26 show the interface between the M-RAM block and the logic array.

Figure 2–24. EP2S130 Device with M-RAM Interface Locations *Note (1)*

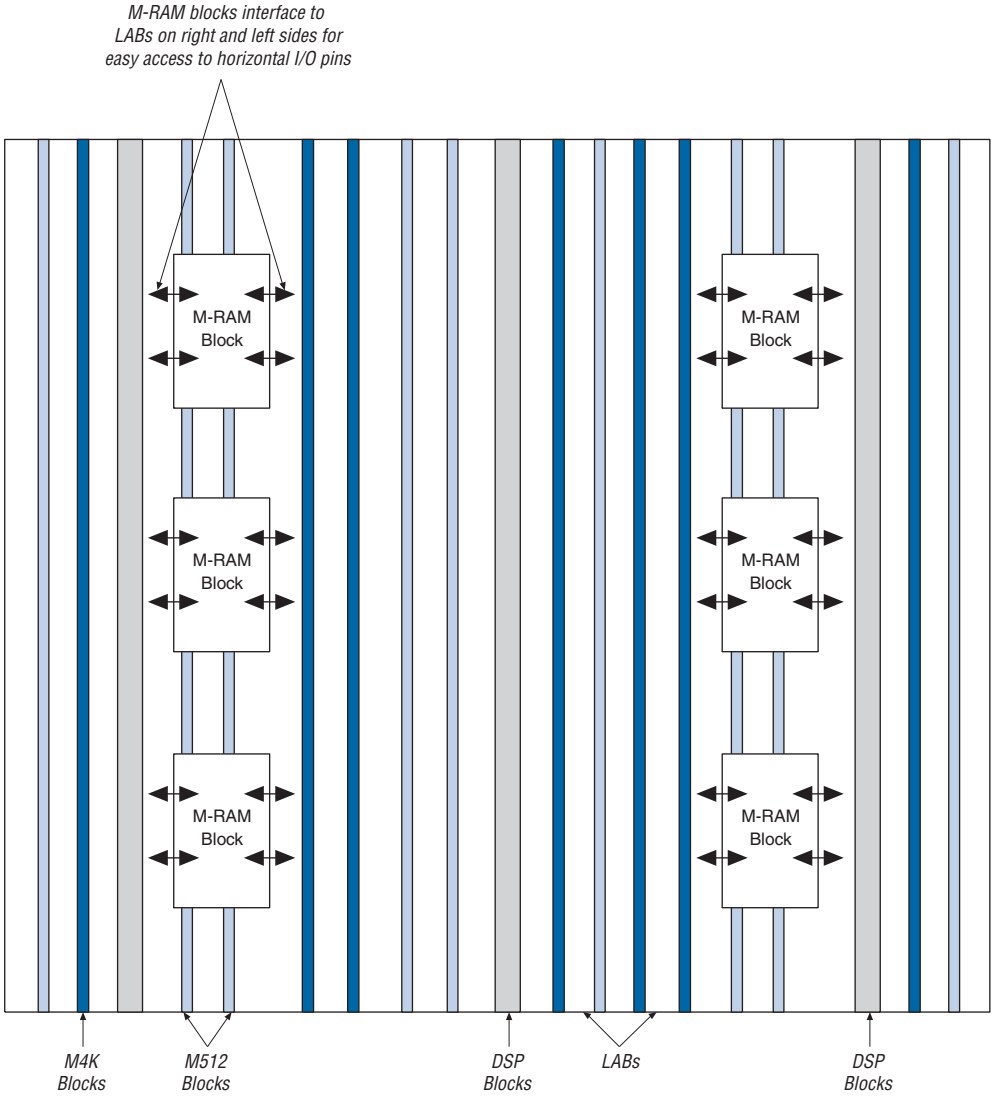

Note to Figure 2–24:

(1) The device shown is an EP2S130 device. The number and position of M-RAM blocks varies in other devices.

Figure 2–25. M-RAM Block LAB Row Interface *Note (1)*

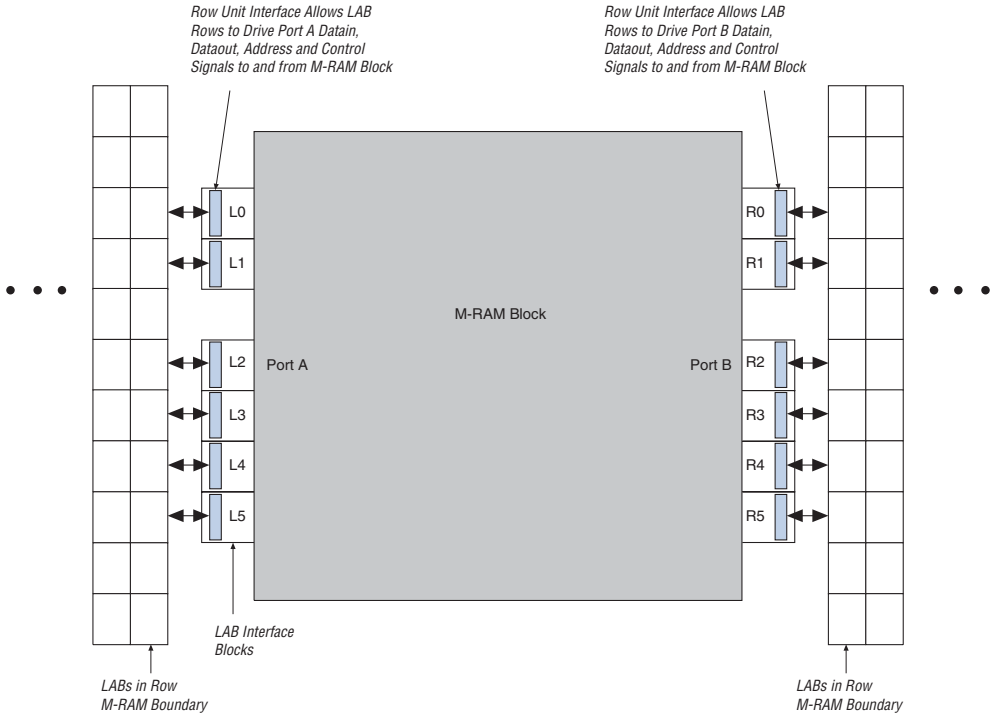

Note to Figure 2–25:

(1) Only R24 and C16 interconnects cross the M-RAM block boundaries.

Figure 2–26. M-RAM Row Unit Interface to Interconnect

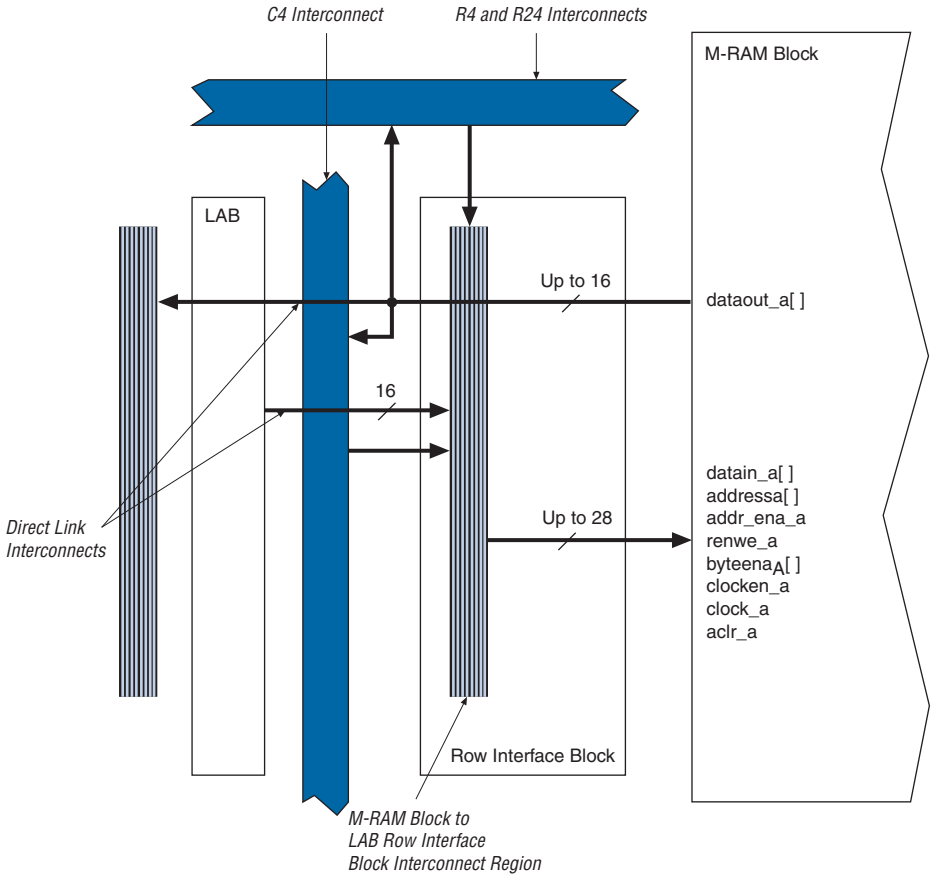

Table 2–4 shows the input and output data signal connections along with the address and control signal input connections to the row unit interfaces (L0 to L5 and R0 to R5).

Table 2–4. M-RAM Row Interface Unit Signals

Unit Interface Block	Input Signals	Output Signals
L0	datain_a[14..0] byteena_a[1..0]	dataout_a[11..0]
L1	datain_a[29..15] byteena_a[3..2]	dataout_a[23..12]
L2	datain_a[35..30] addressa[4..0] addr_ena_a clock_a clocken_a renwe_a aclr_a	dataout_a[35..24]
L3	addressa[15..5] datain_a[41..36]	dataout_a[47..36]
L4	datain_a[56..42] byteena_a[5..4]	dataout_a[59..48]
L5	datain_a[71..57] byteena_a[7..6]	dataout_a[71..60]
R0	datain_b[14..0] byteena_b[1..0]	dataout_b[11..0]
R1	datain_b[29..15] byteena_b[3..2]	dataout_b[23..12]
R2	datain_b[35..30] addressb[4..0] addr_ena_b clock_b clocken_b renwe_b aclr_b	dataout_b[35..24]
R3	addressb[15..5] datain_b[41..36]	dataout_b[47..36]
R4	datain_b[56..42] byteena_b[5..4]	dataout_b[59..48]
R5	datain_b[71..57] byteena_b[7..6]	dataout_b[71..60]

See the *TriMatrix Embedded Memory Blocks in Stratix II & Stratix II GX Devices* chapter in volume 2 of the *Stratix II Device Handbook* or the *Stratix II GX Device Handbook* for more information on TriMatrix memory.

Digital Signal Processing Block

The most commonly used DSP functions are FIR filters, complex FIR filters, IIR filters, fast Fourier transform (FFT) functions, direct cosine transform (DCT) functions, and correlators. All of these use the multiplier as the fundamental building block. Additionally, some applications need specialized operations such as multiply-add and multiply-accumulate operations. Stratix II devices provide DSP blocks to meet the arithmetic requirements of these functions.

Each Stratix II device has from two to four columns of DSP blocks to efficiently implement DSP functions faster than ALM-based implementations. Stratix II devices have up to 24 DSP blocks per column (see Table 2–5). Each DSP block can be configured to support up to:

- Eight 9 × 9-bit multipliers
- Four 18 × 18-bit multipliers
- One 36 × 36-bit multiplier

As indicated, the Stratix II DSP block can support one 36 × 36-bit multiplier in a single DSP block. This is true for any combination of signed, unsigned, or mixed sign multiplications.

☞ This list only shows functions that can fit into a single DSP block. Multiple DSP blocks can support larger multiplication functions.

Figure 2–27 shows one of the columns with surrounding LAB rows.

Figure 2–27. DSP Blocks Arranged in Columns

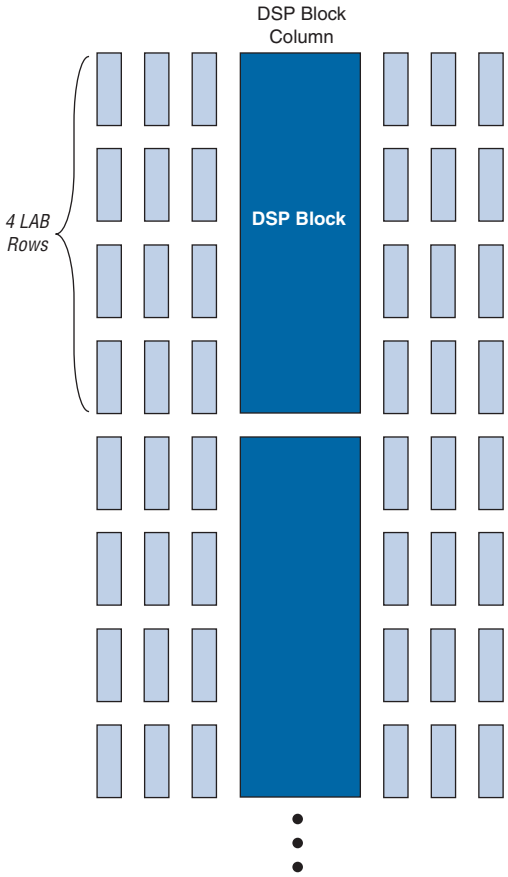

Table 2–5 shows the number of DSP blocks in each Stratix II device.

Table 2–5. DSP Blocks in Stratix II Devices *Note (1)*

Device	DSP Blocks	Total 9 × 9 Multipliers	Total 18 × 18 Multipliers	Total 36 × 36 Multipliers
EP2S15	12	96	48	12
EP2S30	16	128	64	16
EP2S60	36	288	144	36
EP2S90	48	384	192	48
EP2S130	63	504	252	63
EP2S180	96	768	384	96

Note to Table 2–5:

(1) Each device has either the numbers of 9 × 9-, 18 × 18-, or 36 × 36-bit multipliers shown. The total number of multipliers for each device is not the sum of all the multipliers.

DSP block multipliers can optionally feed an adder/subtractor or accumulator in the block depending on the configuration. This makes routing to ALMs easier, saves ALM routing resources, and increases performance, because all connections and blocks are in the DSP block. Additionally, the DSP block input registers can efficiently implement shift registers for FIR filter applications, and DSP blocks support Q1.15 format rounding and saturation.

Figure 2–28 shows the top-level diagram of the DSP block configured for 18 × 18-bit multiplier mode.

Figure 2–28. DSP Block Diagram for 18 × 18-Bit Configuration

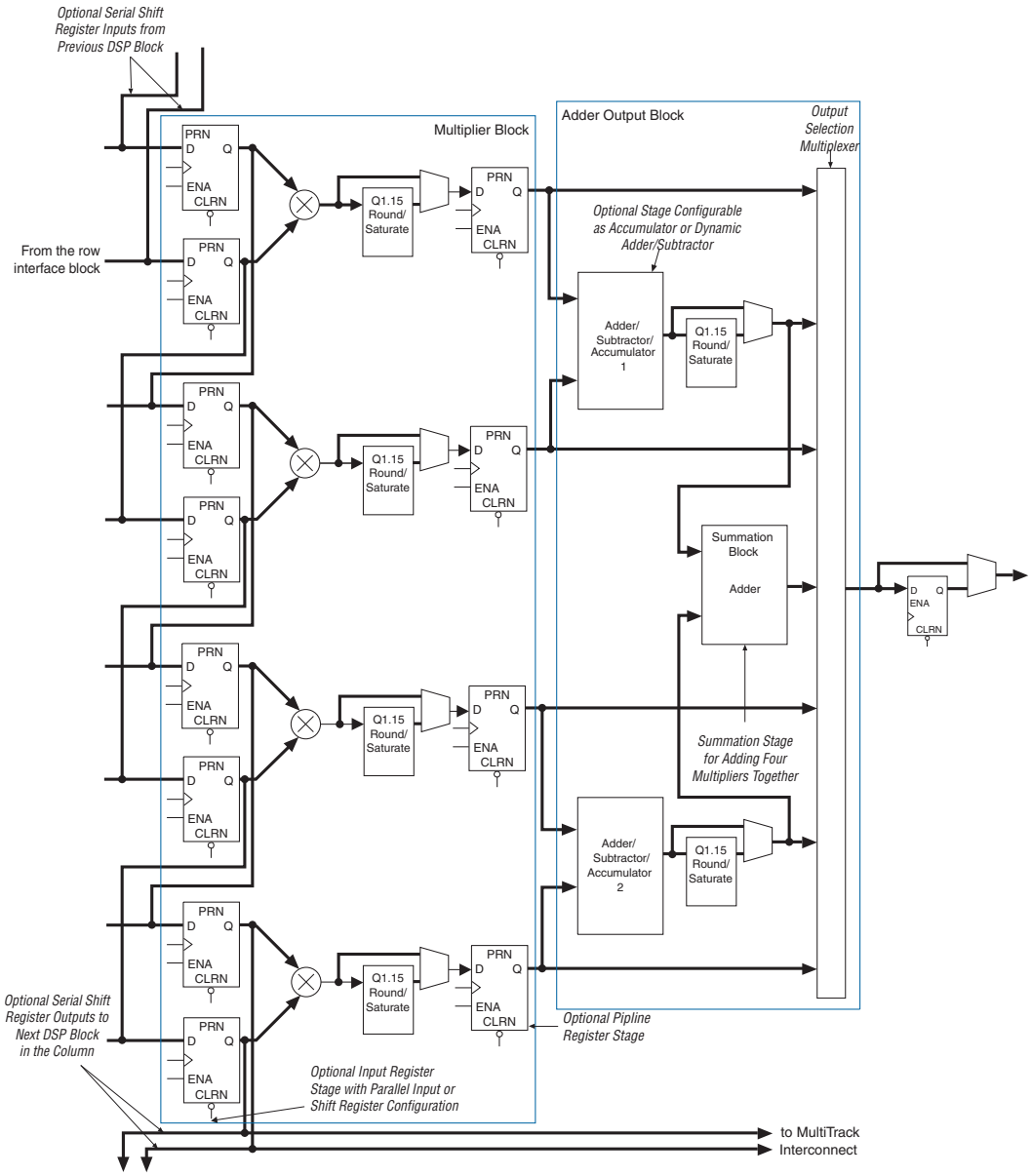

Modes of Operation

The adder, subtractor, and accumulate functions of a DSP block have four modes of operation:

- Simple multiplier
- Multiply-accumulator
- Two-multipliers adder
- Four-multipliers adder

Table 2–6 shows the different number of multipliers possible in each DSP block mode according to size. These modes allow the DSP blocks to implement numerous applications for DSP including FFTs, complex FIR, FIR, and 2D FIR filters, equalizers, IIR, correlators, matrix multiplication and many other functions. The DSP blocks also support mixed modes and mixed multiplier sizes in the same block. For example, half of one DSP block can implement one 18 × 18-bit multiplier in multiply-accumulator mode, while the other half of the DSP block implements four 9 × 9-bit multipliers in simple multiplier mode.

Table 2–6. Multiplier Size & Configurations per DSP Block

DSP Block Mode	9 × 9	18 × 18	36 × 36
Multiplier	Eight multipliers with eight product outputs	Four multipliers with four product outputs	One multiplier with one product output
Multiply-accumulator	-	Two 52-bit multiply-accumulate blocks	-
Two-multipliers adder	Four two-multiplier adder (two 9 × 9 complex multiply)	Two two-multiplier adder (one 18 × 18 complex multiply)	-
Four-multipliers adder	Two four-multiplier adder	One four-multiplier adder	-

DSP Block Interface

Stratix II device DSP block input registers can generate a shift register that can cascade down in the same DSP block column. Dedicated connections between DSP blocks provide fast connections between the shift register inputs to cascade the shift register chains. You can cascade registers within multiple DSP blocks for 9 × 9- or 18 × 18-bit FIR filters larger than four taps, with additional adder stages implemented in ALMs. If the DSP block is configured as 36 × 36 bits, the adder, subtractor, or accumulator stages are implemented in ALMs. Each DSP block can route the shift register chain out of the block to cascade multiple columns of DSP blocks.

The DSP block is divided into four block units that interface with four LAB rows on the left and right. Each block unit can be considered one complete 18 × 18-bit multiplier with 36 inputs and 36 outputs. A local interconnect region is associated with each DSP block. Like an LAB, this interconnect region can be fed with 16 direct link interconnects from the LAB to the left or right of the DSP block in the same row. R4 and C4 routing resources can access the DSP block's local interconnect region. The outputs also work similarly to LAB outputs as well. Eighteen outputs from the DSP block can drive to the left LAB through direct link interconnects and eighteen can drive to the right LAB though direct link interconnects. All 36 outputs can drive to R4 and C4 routing interconnects. Outputs can drive right- or left-column routing. Figures 2–29 and 2–30 show the DSP block interfaces to LAB rows.

Figure 2–29. DSP Block Interconnect Interface

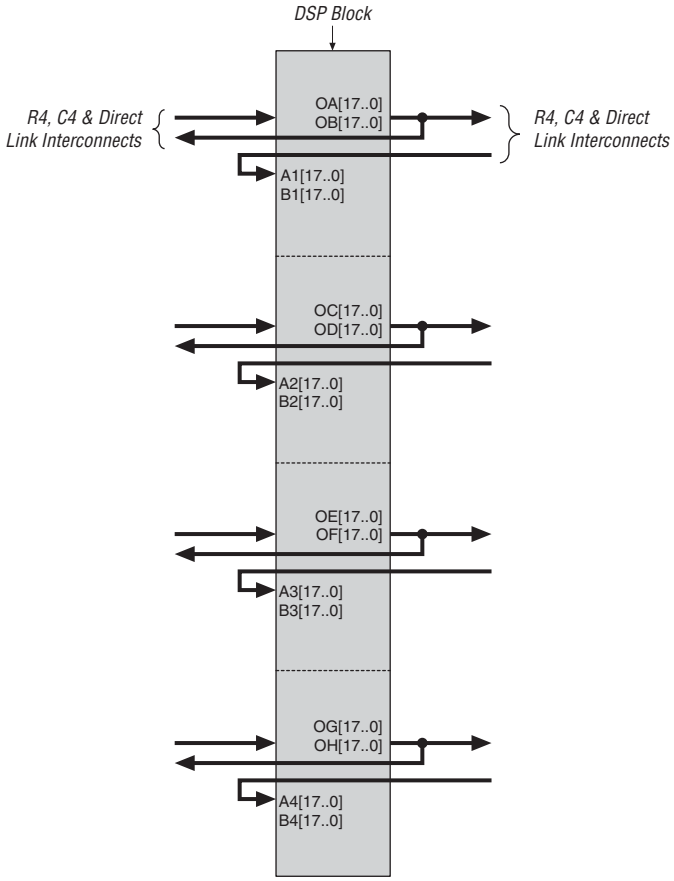

Figure 2–30. DSP Block Interface to Interconnect

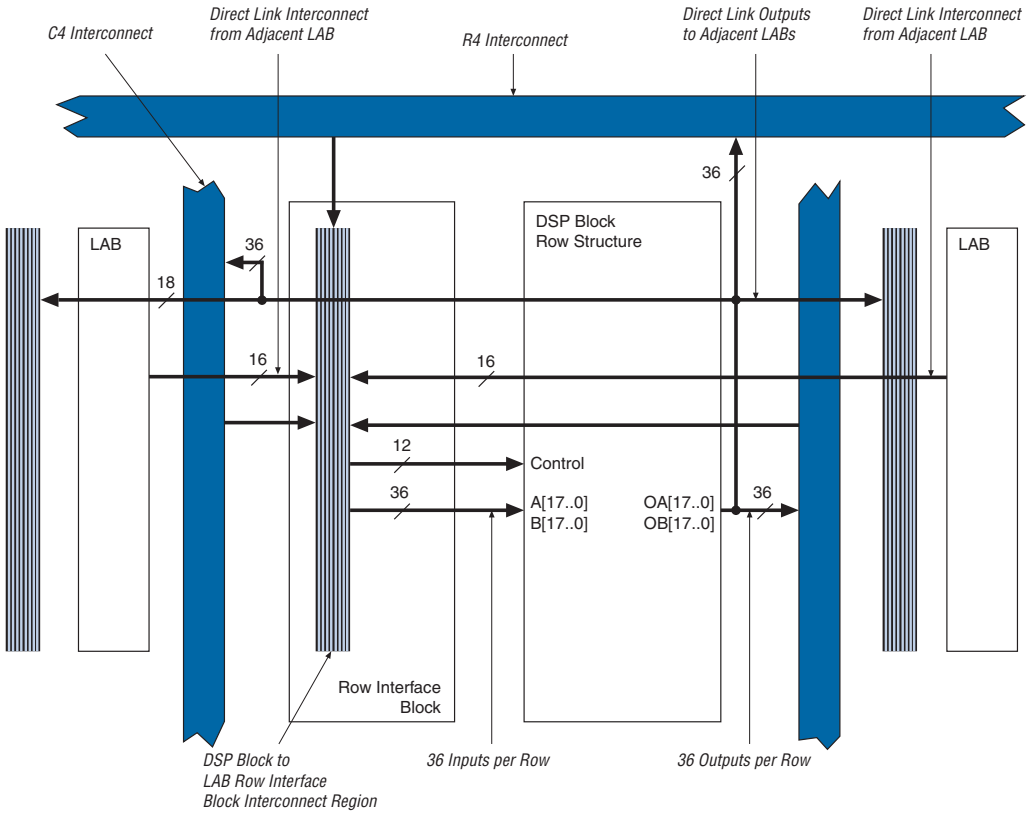

A bus of 44 control signals feeds the entire DSP block. These signals include clocks, asynchronous clears, clock enables, signed/unsigned control signals, addition and subtraction control signals, rounding and saturation control signals, and accumulator synchronous loads. The clock signals are routed from LAB row clocks and are generated from specific LAB rows at the DSP block interface.

The LAB row source for control signals, data inputs, and outputs is shown in Table 2–7.

Table 2–7. DSP Block Signal Sources & Destinations

LAB Row at Interface	Control Signals Generated	Data Inputs	Data Outputs
0	clock0 aclr0 ena0 mult01_saturate addnsub1_round/ accum_round addnsub1 signa sourcea sourceb	A1[17..0] B1[17..0]	OA[17..0] OB[17..0]
1	clock1 aclr1 ena1 accum_saturate mult01_round accum_sload sourcea sourceb mode0	A2[17..0] B2[17..0]	OC[17..0] OD[17..0]
2	clock2 aclr2 ena2 mult23_saturate addnsub3_round/ accum_round addnsub3 sign_b sourcea sourceb	A3[17..0] B3[17..0]	OE[17..0] OF[17..0]
3	clock3 aclr3 ena3 accum_saturate mult23_round accum_sload sourcea sourceb mode1	A4[17..0] B4[17..0]	OG[17..0] OH[17..0]

See the *DSP Blocks in Stratix II & Stratix II GX Devices* chapter in volume 2 of the *Stratix II Device Handbook* or the *Stratix II GX Device Handbook*, for more information on DSP blocks.

PLLs & Clock Networks

Stratix II devices provide a hierarchical clock structure and multiple PLLs with advanced features. The large number of clocking resources in combination with the clock synthesis precision provided by enhanced and fast PLLs provides a complete clock management solution.

Global & Hierarchical Clocking

Stratix II devices provide 16 dedicated global clock networks and 32 regional clock networks (eight per device quadrant). These clocks are organized into a hierarchical clock structure that allows for up to 24 clocks per device region with low skew and delay. This hierarchical clocking scheme provides up to 48 unique clock domains in Stratix II devices.

There are 16 dedicated clock pins (`CLK[15..0]`) to drive either the global or regional clock networks. Four clock pins drive each side of the device, as shown in Figures 2–31 and 2–32. Internal logic and enhanced and fast PLL outputs can also drive the global and regional clock networks. Each global and regional clock has a clock control block, which controls the selection of the clock source and dynamically enables/disables the clock to reduce power consumption. Table 2–8 shows global and regional clock features.

Table 2–8. Global & Regional Clock Features

Feature	Global Clocks	Regional Clocks
Number per device	16	32
Number available per quadrant	16	8
Sources	`CLK` pins, PLL outputs, or internal logic	`CLK` pins, PLL outputs, or internal logic
Dynamic clock source selection	✓ *(1)*	
Dynamic enable/disable	✓	✓

Note to Table 2–8:

(1) Dynamic source clock selection is supported for selecting between `CLK`p pins and PLL outputs only.

Global Clock Network

These clocks drive throughout the entire device, feeding all device quadrants. The global clock networks can be used as clock sources for all resources in the device-IOEs, ALMs, DSP blocks, and all memory blocks. These resources can also be used for control signals, such as clock enables and synchronous or asynchronous clears fed from the external pin. The

global clock networks can also be driven by internal logic for internally generated global clocks and asynchronous clears, clock enables, or other control signals with large fanout. Figure 2–31 shows the 16 dedicated CLK pins driving global clock networks.

Figure 2–31. Global Clocking

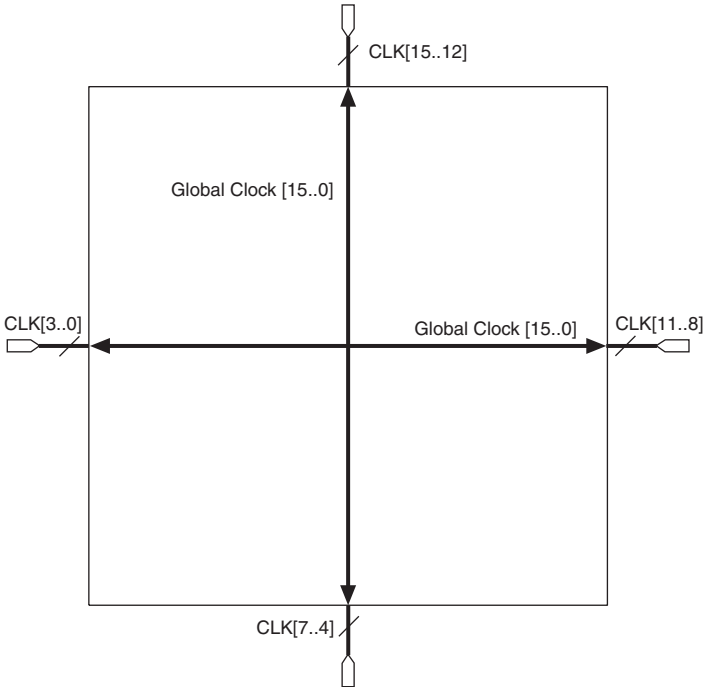

Regional Clock Network

There are eight regional clock networks RCLK[7..0] in each quadrant of the Stratix II device that are driven by the dedicated CLK[15..0] input pins, by PLL outputs, or by internal logic. The regional clock networks provide the lowest clock delay and skew for logic contained in a single quadrant. The CLK clock pins symmetrically drive the RCLK networks in a particular quadrant, as shown in Figure 2–32.

Figure 2–32. Regional Clocks

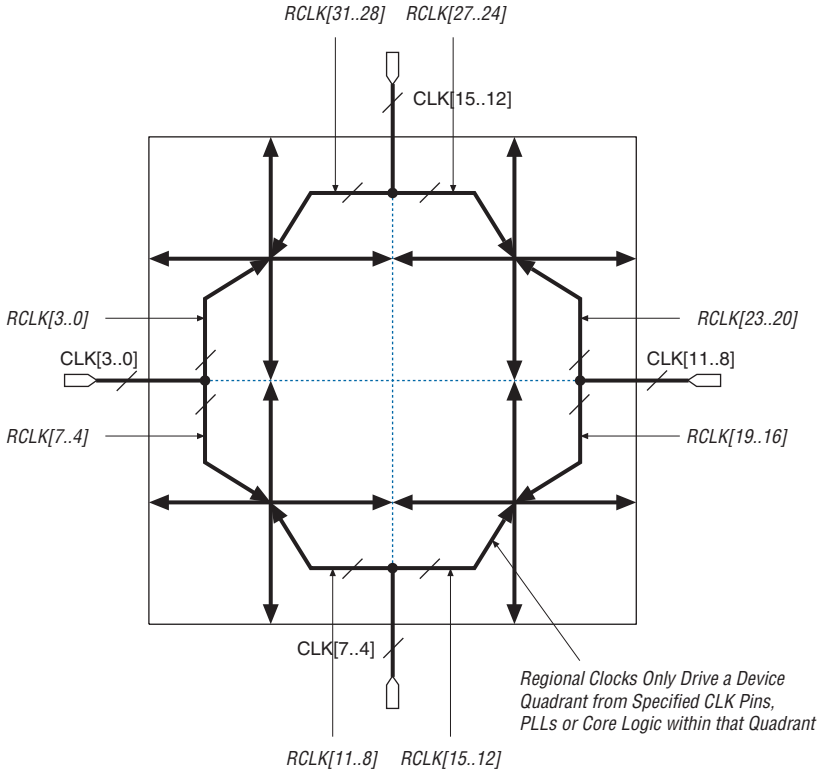

Dual-Regional Clock Network

A single source (CLK pin or PLL output) can generate a dual-regional clock by driving two regional clock network lines in adjacent quadrants (one from each quadrant). This allows logic that spans multiple quadrants to utilize the same low skew clock. The routing of this clock signal on an entire side has approximately the same speed but slightly higher clock skew when compared with a clock signal that drives a single quadrant. Internal logic-array routing can also drive a dual-regional clock. Clock pins and enhanced PLL outputs on the top and bottom can drive horizontal dual-regional clocks. Clock pins and fast PLL outputs on the left and right can drive vertical dual-regional clocks, as shown in Figure 2–33. Corner PLLs cannot drive dual-regional clocks.

Figure 2–33. Dual-Regional Clocks

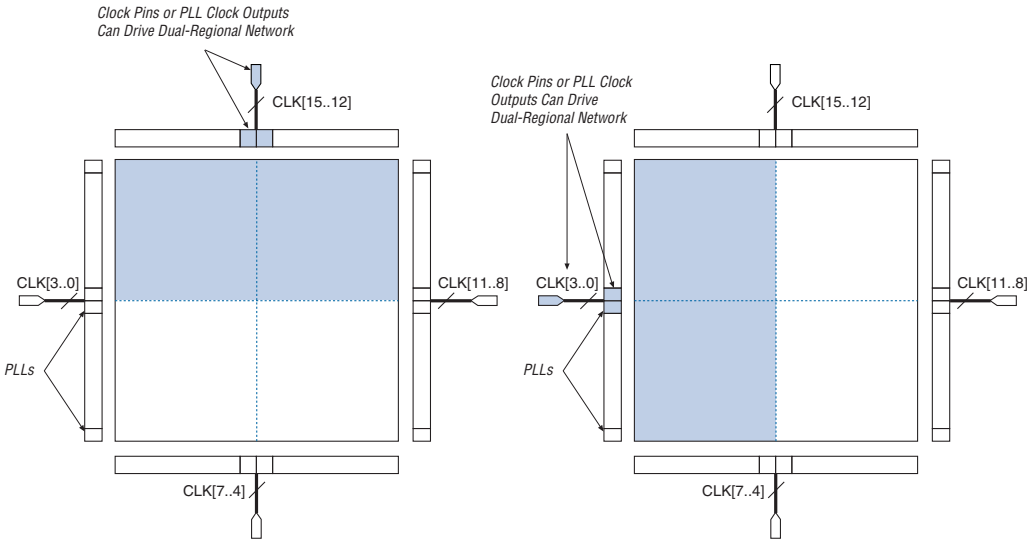

Combined Resources

Within each quadrant, there are 24 distinct dedicated clocking resources consisting of 16 global clock lines and eight regional clock lines. Multiplexers are used with these clocks to form busses to drive LAB row clocks, column IOE clocks, or row IOE clocks. Another multiplexer is used at the LAB level to select three of the six row clocks to feed the ALM registers in the LAB (see Figure 2–34).

Figure 2–34. Hierarchical Clock Networks Per Quadrant

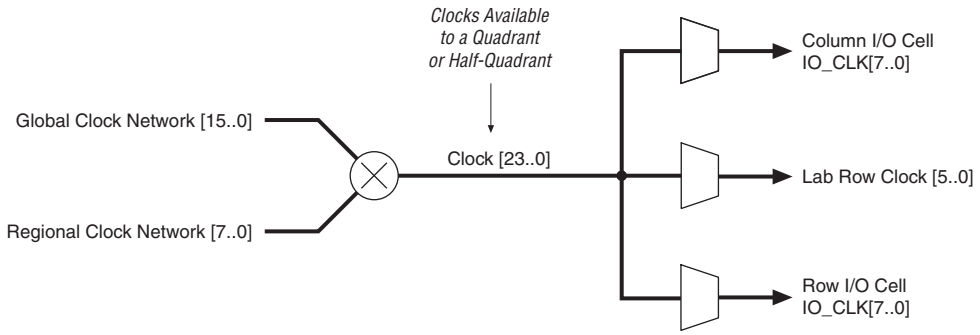

IOE clocks have row and column block regions that are clocked by eight I/O clock signals chosen from the 24 quadrant clock resources. Figures 2–35 and 2–36 show the quadrant relationship to the I/O clock regions.

Figure 2–35. EP2S15 & EP2S30 Device I/O Clock Groups

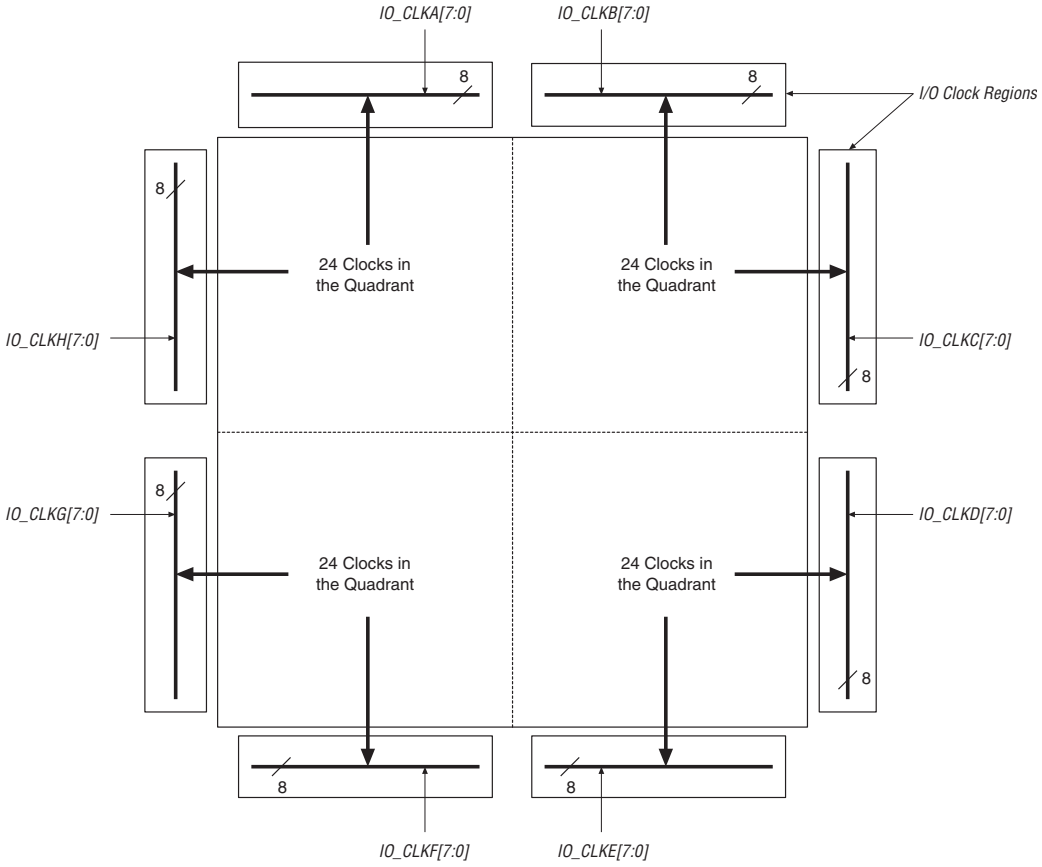

Figure 2–36. EP2S60, EP2S90, EP2S130 & EP2S180 Device I/O Clock Groups

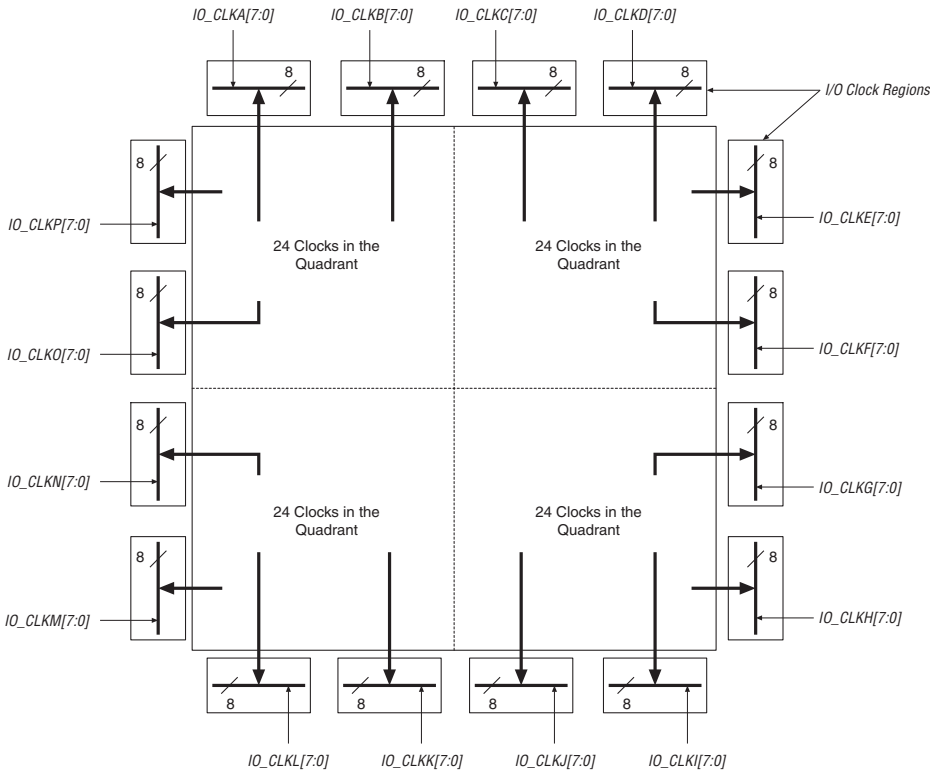

You can use the Quartus II software to control whether a clock input pin drives either a global, regional, or dual-regional clock network. The Quartus II software automatically selects the clocking resources if not specified.

Clock Control Block

Each global clock, regional clock, and PLL external clock output has its own clock control block. The control block has two functions:

- Clock source selection (dynamic selection for global clocks)
- Clock power-down (dynamic clock enable/disable)

When using the global or regional clock control blocks in Stratix II devices to select between multiple clocks or to enable and disable clock networks, be aware of possible narrow pulses or glitches when switching from one clock signal to another. A glitch or runt pulse has a width that is less than the width of the highest frequency input clock signal. To prevent logic errors within the FPGA, Altera recommends that you build circuits that filter out glitches and runt pulses.

Figures 2–37 through 2–39 show the clock control block for the global clock, regional clock, and PLL external clock output, respectively.

Figure 2–37. Global Clock Control Blocks

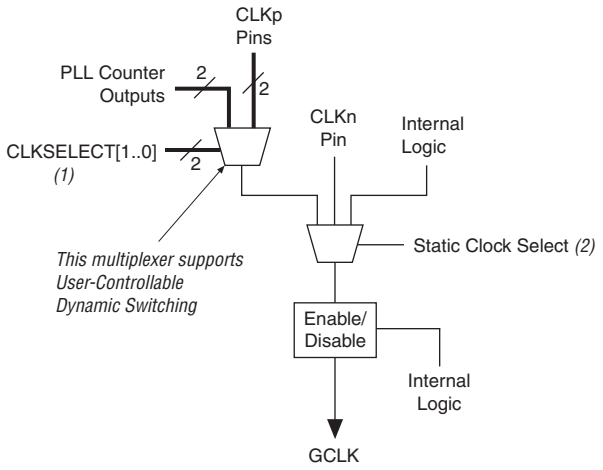

Notes to Figure 2–37:

(1) These clock select signals can be dynamically controlled through internal logic when the device is operating in user mode.

(2) These clock select signals can only be set through a configuration file (**.sof** or **.pof**) and cannot be dynamically controlled during user mode operation.

Figure 2–38. Regional Clock Control Blocks

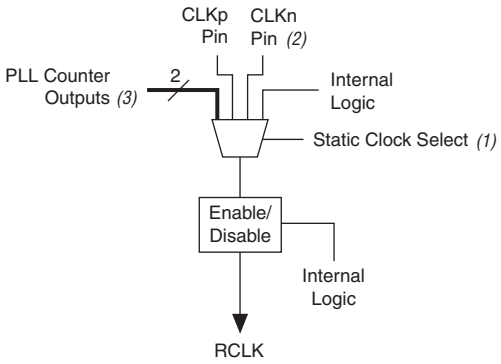

Notes to Figure 2–38:

(1) These clock select signals can only be set through a configuration file (**.sof** or **.pof**) and cannot be dynamically controlled during user mode operation.

(2) Only the `CLKn` pins on the top and bottom of the device feed to regional clock select blocks.The clock outputs from corner PLLs cannot be dynamically selected through the global clock control block.

(3) The clock outputs from corner PLLs cannot be dynamically selected through the global clock control block.

Figure 2–39. External PLL Output Clock Control Blocks

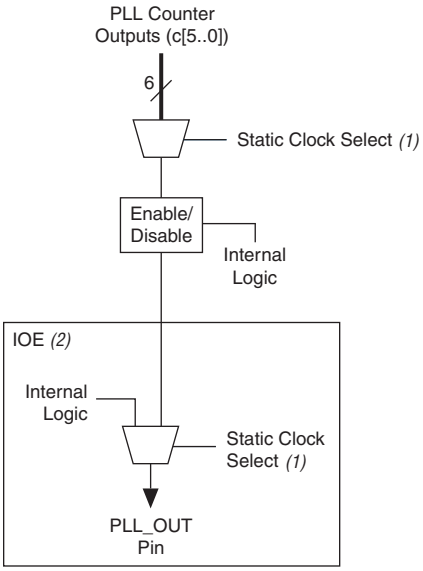

Notes to Figure 2–39:

(1) These clock select signals can only be set through a configuration file (**.sof** or **.pof**) and cannot be dynamically controlled during user mode operation.

(2) The clock control block feeds to a multiplexer within the `PLL_OUT` pin's IOE. The `PLL_OUT` pin is a dual-purpose pin. Therefore, this multiplexer selects either an internal signal or the output of the clock control block.

For the global clock control block, the clock source selection can be controlled either statically or dynamically. The user has the option of statically selecting the clock source by using the Quartus II software to set specific configuration bits in the configuration file (**.sof** or **.pof**) or the user can control the selection dynamically by using internal logic to drive the multiplexor select inputs. When selecting statically, the clock source can be set to any of the inputs to the select multiplexor. When selecting the clock source dynamically, you can either select between two PLL outputs (such as the C0 or C1 outputs from one PLL), between two PLLs (such as the C0/C1 clock output of one PLL or the C0/C1 c1ock output of the other PLL), between two clock pins (such as `CLK0` or `CLK1`), or between a combination of clock pins or PLL outputs. The clock outputs from corner PLLs cannot be dynamically selected through the global control block.

For the regional and `PLL_OUT` clock control block, the clock source selection can only be controlled statically using configuration bits. Any of the inputs to the clock select multiplexor can be set as the clock source.

The Stratix II clock networks can be disabled (powered down) by both static and dynamic approaches. When a clock net is powered down, all the logic fed by the clock net is in an off-state thereby reducing the overall power consumption of the device.

The global and regional clock networks can be powered down statically through a setting in the configuration (**.sof** or **.pof**) file. Clock networks that are not used are automatically powered down through configuration bit settings in the configuration file generated by the Quartus II software.

The dynamic clock enable/disable feature allows the internal logic to control power up/down synchronously on `GCLK` and `RCLK` nets and `PLL_OUT` pins. This function is independent of the PLL and is applied directly on the clock network or `PLL_OUT` pin, as shown in Figures 2–37 through 2–39.

The following restrictions for the input clock pins apply:

- `CLK0 pin -> inclk[0] of CLKCTRL`
- `CLK1 pin -> inclk[1] of CLKCTRL`
- `CLK2 pin -> inclk[0] of CLKCTRL`
- `CLK3 pin -> inclk[1] of CLKCTRL`

In general, even CLK numbers connect to the `inclk[0]` port of `CLKCTRL`, and odd CLK numbers connect to the `inclk[1]` port of `CLKCTRL`.

Failure to comply with these restrictions will result in a no-fit error.

Enhanced & Fast PLLs

Stratix II devices provide robust clock management and synthesis using up to four enhanced PLLs and eight fast PLLs. These PLLs increase performance and provide advanced clock interfacing and clock-frequency synthesis. With features such as clock switchover, spread-spectrum clocking, reconfigurable bandwidth, phase control, and reconfigurable phase shifting, the Stratix II device's enhanced PLLs provide you with complete control of clocks and system timing. The fast PLLs provide general purpose clocking with multiplication and phase shifting as well as high-speed outputs for high-speed differential I/O support. Enhanced and fast PLLs work together with the Stratix II high-speed I/O and advanced clock architecture to provide significant improvements in system performance and bandwidth.

The Quartus II software enables the PLLs and their features without requiring any external devices. Table 2–9 shows the PLLs available for each Stratix II device and their type.

Table 2–9. Stratix II Device PLL Availability

Device	Fast PLLs								Enhanced PLLs			
	1	2	3	4	7	8	9	10	5	6	11	12
EP2S15	✓	✓	✓	✓					✓	✓		
EP2S30	✓	✓	✓	✓					✓	✓		
EP2S60 *(1)*	✓	✓	✓	✓	✓	✓	✓	✓	✓	✓	✓	✓
EP2S90 *(2)*	✓	✓	✓	✓	✓	✓	✓	✓	✓	✓	✓	✓
EP2S130 *(3)*	✓	✓	✓	✓	✓	✓	✓	✓	✓	✓	✓	✓
EP2S180	✓	✓	✓	✓	✓	✓	✓	✓	✓	✓	✓	✓

Notes to Table 2–9:

(1) EP2S60 devices in the 1020-pin package contain 12 PLLs. EP2S60 devices in the 484-pin and 672-pin packages contain fast PLLs 1–4 and enhanced PLLs 5 and 6.

(2) EP2S90 devices in the 1020-pin and 1508-pin packages contain 12 PLLs. EP2S90 devices in the 484-pin and 780-pin packages contain fast PLLS 1–4 and enhanced PLLs 5 and 6.

(3) EP2S130 devices in the 1020-pin and 1508-pin packages contain 12PLLs. The EP2S130 device in the 780-pin package contains fast PLLs 1–4 and enhanced PLLs 5 and 6.

Table 2–10 shows the enhanced PLL and fast PLL features in Stratix II devices.

Table 2–10. Stratix II PLL Features

Feature	Enhanced PLL	Fast PLL
Clock multiplication and division	$m/(n \times$ post-scale counter) *(1)*	$m/(n \times$ post-scale counter) *(2)*
Phase shift	Down to 125-ps increments *(3)*, *(4)*	Down to 125-ps increments *(3)*, *(4)*
Clock switchover	✓	✓ *(5)*
PLL reconfiguration	✓	✓
Reconfigurable bandwidth	✓	✓
Spread spectrum clocking	✓	
Programmable duty cycle	✓	✓
Number of internal clock outputs	6	4
Number of external clock outputs	Three differential/six single-ended	*(6)*
Number of feedback clock inputs	One single-ended or differential *(7)*, *(8)*	

Notes to Table 2–10:

(1) For enhanced PLLs, *m* ranges from 1 to 256, while *n* and post-scale counters range from 1 to 512 with 50% duty cycle.
(2) For fast PLLs, *m*, and post-scale counters range from 1 to 32. The *n* counter ranges from 1 to 4.
(3) The smallest phase shift is determined by the voltage controlled oscillator (VCO) period divided by 8.
(4) For degree increments, Stratix II devices can shift all output frequencies in increments of at least 45. Smaller degree increments are possible depending on the frequency and divide parameters.
(5) Stratix II fast PLLs only support manual clock switchover.
(6) Fast PLLs can drive to any I/O pin as an external clock. For high-speed differential I/O pins, the device uses a data channel to generate txclkout.
(7) If the feedback input is used, you lose one (or two, if FBIN is differential) external clock output pin.
(8) Every Stratix II device has at least two enhanced PLLs with one single-ended or differential external feedback input per PLL.

Figure 2–40 shows a top-level diagram of the Stratix II device and PLL floorplan.

Figure 2–40. PLL Locations

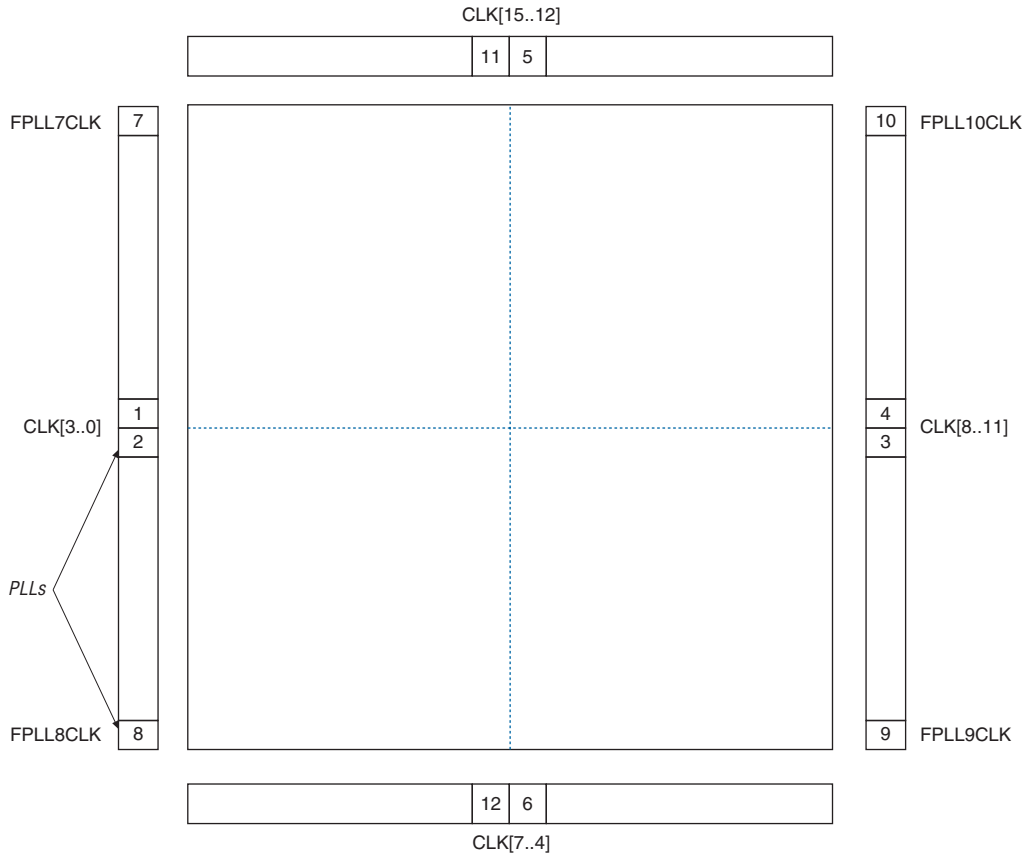

Figures 2–41 and 2–42 shows the global and regional clocking from the fast PLL outputs and the side clock pins.

Figure 2–41. Global & Regional Clock Connections from Center Clock Pins & Fast PLL Outputs *Note (1)*

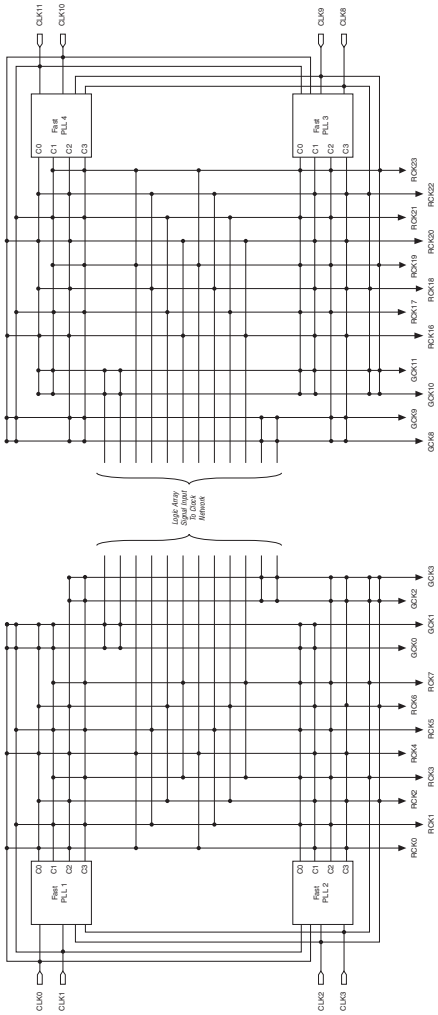

Notes to Figure 2–41:

(1) EP2S15 and EP2S30 devices only have four fast PLLs (1, 2, 3, and 4), but the connectivity from these four PLLs to the global and regional clock networks remains the same as shown.

(2) The global or regional clocks in a fast PLL's quadrant can drive the fast PLL input. The global or regional clock input can be driven by an output from another PLL, a pin-driven dedicated global or regional clock, or through a clock control block, provided the clock control block is fed by an output from another PLL or a pin-driven dedicated global or regional clock. An internally generated global signal cannot drive the PLL.

Figure 2–42. Global & Regional Clock Connections from Corner Clock Pins & Fast PLL Outputs *Note (1)*

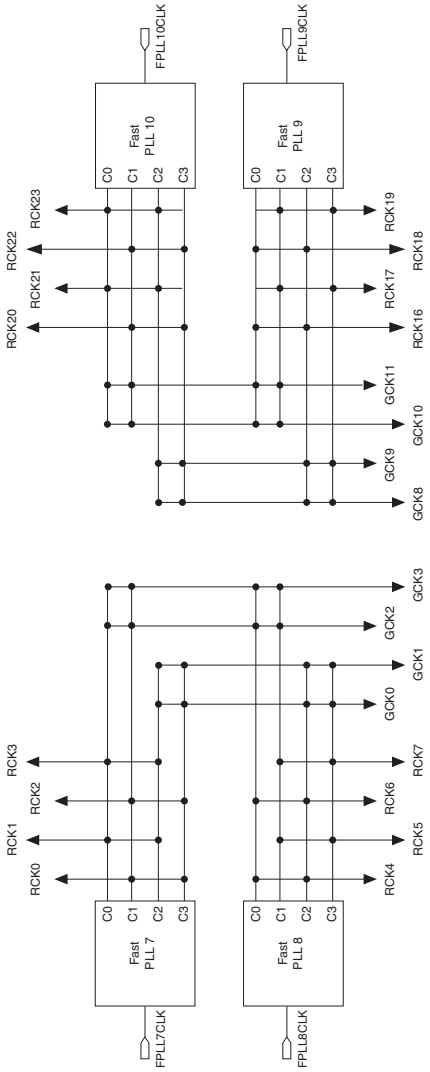

Note to Figure 2–42:

(1) The corner fast PLLs can also be driven through the global or regional clock networks. The global or regional clock input can be driven by an output from another PLL, a pin-driven dedicated global or regional clock, or through a clock control block, provided the clock control block is fed by an output from another PLL or a pin-driven dedicated global or regional clock. An internally generated global signal cannot drive the PLL.

Figure 2–43 shows the global and regional clocking from enhanced PLL outputs and top and bottom CLK pins. The connections to the global and regional clocks from the top clock pins and enhanced PLL outputs is shown in Table 2–11. The connections to the clocks from the bottom clock pins is shown in Table 2–12.

Figure 2–43. Global & Regional Clock Connections from Top & Bottom Clock Pins & Enhanced PLL Outputs Notes (1), (2), and (3)

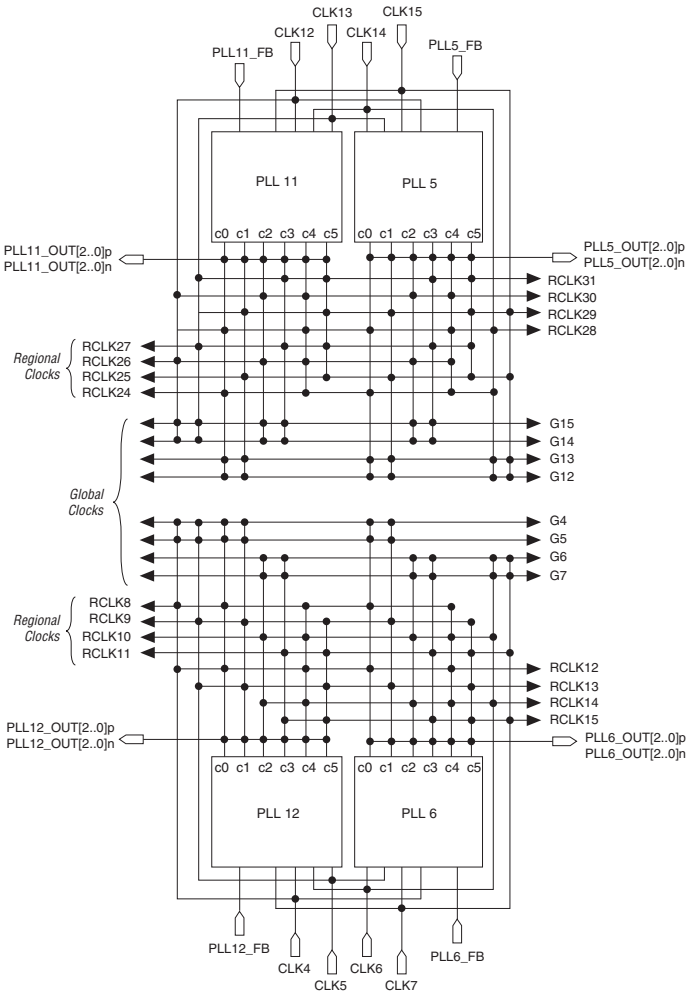

Notes to Figure 2–43:

(1) EP2S15 and EP2S30 devices only have two enhanced PLLs (5 and 6), but the connectivity from these two PLLs to the global and regional clock networks remains the same as shown.

(2) If the design uses the feedback input, you lose one (or two, if FBIN is differential) external clock output pin.

(3) The enhanced PLLs can also be driven through the global or regional clock netowrks. The global or regional clock input can be driven by an output from another PLL, a pin-driven dedicated global or regional clock, or through a clock control block provided the clock control block is fed by an output from another PLL or a pin-driven dedicated global or regional clock. An internally generated global signal cannot drive the PLL.

Table 2–11. Global & Regional Clock Connections from Top Clock Pins & Enhanced PLL Outputs (Part 1 of 2)

Top Side Global & Regional Clock Network Connectivity	DLLCLK	CLK12	CLK13	CLK14	CLK15	RCLK24	RCLK25	RCLK26	RCLK27	RCLK28	RCLK29	RCLK30	RCLK31
Clock pins													
CLK12p	✓	✓	✓			✓				✓			
CLK13p	✓	✓	✓				✓						✓
CLK14p	✓			✓	✓			✓				✓	
CLK15p	✓			✓	✓				✓		✓		
CLK12n		✓				✓				✓			
CLK13n			✓				✓						✓
CLK14n				✓				✓				✓	
CLK15n					✓				✓		✓		
Drivers from internal logic													
GCLKDRV0		✓											
GCLKDRV1			✓										
GCLKDRV2				✓									
GCLKDRV3					✓								
RCLKDRV0						✓				✓			
RCLKDRV1							✓				✓		
RCLKDRV2								✓				✓	
RCLKDRV3									✓				✓
RCLKDRV4						✓				✓			
RCLKDRV5							✓				✓		
RCLKDRV6								✓				✓	
RCLKDRV7									✓				✓
Enhanced PLL 5 outputs													
c0	✓	✓	✓			✓				✓			
c1	✓	✓	✓				✓				✓		
c2	✓			✓	✓			✓				✓	
c3	✓			✓	✓				✓				✓

Table 2–11. Global & Regional Clock Connections from Top Clock Pins & Enhanced PLL Outputs (Part 2 of 2)

Top Side Global & Regional Clock Network Connectivity	DLLCLK	CLK12	CLK13	CLK14	CLK15	RCLK24	RCLK25	RCLK26	RCLK27	RCLK28	RCLK29	RCLK30	RCLK31
c4	✓					✓		✓		✓		✓	
c5	✓						✓		✓		✓		✓
Enhanced PLL 11 outputs													
c0		✓	✓			✓				✓			
c1		✓	✓				✓				✓		
c2				✓	✓			✓				✓	
c3				✓	✓				✓				✓
c4						✓		✓		✓		✓	
c5							✓		✓		✓		✓

Table 2–12. Global & Regional Clock Connections from Bottom Clock Pins & Enhanced PLL Outputs (Part 1 of 2)

Bottom Side Global & Regional Clock Network Connectivity	DLLCLK	CLK4	CLK5	CLK6	CLK7	RCLK8	RCLK9	RCLK10	RCLK11	RCLK12	RCLK13	RCLK14	RCLK15
Clock pins													
CLK4p	✓	✓	✓			✓				✓			
CLK5p	✓	✓	✓				✓				✓		
CLK6p	✓			✓	✓			✓				✓	
CLK7p	✓			✓	✓				✓				✓
CLK4n		✓				✓				✓			
CLK5n			✓				✓				✓		
CLK6n				✓				✓				✓	
CLK7n					✓				✓				✓
Drivers from internal logic													
GCLKDRV0		✓											
GCLKDRV1			✓										
GCLKDRV2				✓									

Table 2–12. Global & Regional Clock Connections from Bottom Clock Pins & Enhanced PLL Outputs (Part 2 of 2)

Bottom Side Global & Regional Clock Network Connectivity	DLLCLK	CLK4	CLK5	CLK6	CLK7	RCLK8	RCLK9	RCLK10	RCLK11	RCLK12	RCLK13	RCLK14	RCLK15
GCLKDRV3					✓								
RCLKDRV0						✓				✓			
RCLKDRV1							✓				✓		
RCLKDRV2								✓				✓	
RCLKDRV3									✓				✓
RCLKDRV4						✓				✓			
RCLKDRV5							✓				✓		
RCLKDRV6								✓				✓	
RCLKDRV7									✓				✓
Enhanced PLL 6 outputs													
c0	✓	✓	✓			✓				✓			
c1	✓	✓	✓				✓				✓		
c2	✓			✓	✓			✓				✓	
c3	✓			✓	✓				✓				✓
c4	✓					✓		✓		✓		✓	
c5	✓						✓		✓		✓		✓
Enhanced PLL 12 outputs													
c0		✓	✓			✓				✓			
c1		✓	✓				✓				✓		
c2				✓	✓			✓				✓	
c3				✓	✓				✓				✓
c4						✓		✓		✓		✓	
c5							✓		✓		✓		✓

Enhanced PLLs

Stratix II devices contain up to four enhanced PLLs with advanced clock management features. Figure 2–44 shows a diagram of the enhanced PLL.

Figure 2–44. Stratix II Enhanced PLL *Note (1)*

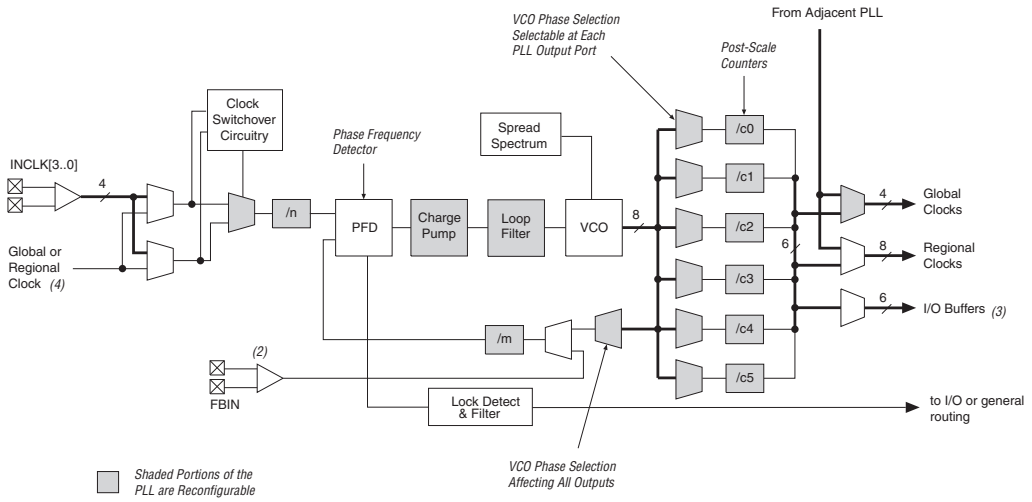

Notes to Figure 2–44:

(1) Each clock source can come from any of the four clock pins that are physically located on the same side of the device as the PLL.

(2) If the feedback input is used, you lose one (or two, if FBIN is differential) external clock output pin.

(3) Each enhanced PLL has three differential external clock outputs or six single-ended external clock outputs.

(4) The global or regional clock input can be driven by an output from another PLL, a pin-driven dedicated global or regional clock, or through a clock control block, provided the clock control block is fed by an output from another PLL or a pin-driven dedicated global or regional clock. An internally generated global signal cannot drive the PLL.

Fast PLLs

Stratix II devices contain up to eight fast PLLs with high-speed serial interfacing ability. Figure 2–45 shows a diagram of the fast PLL.

Figure 2–45. Stratix II Device Fast PLL *Notes (1), (2), (3)*

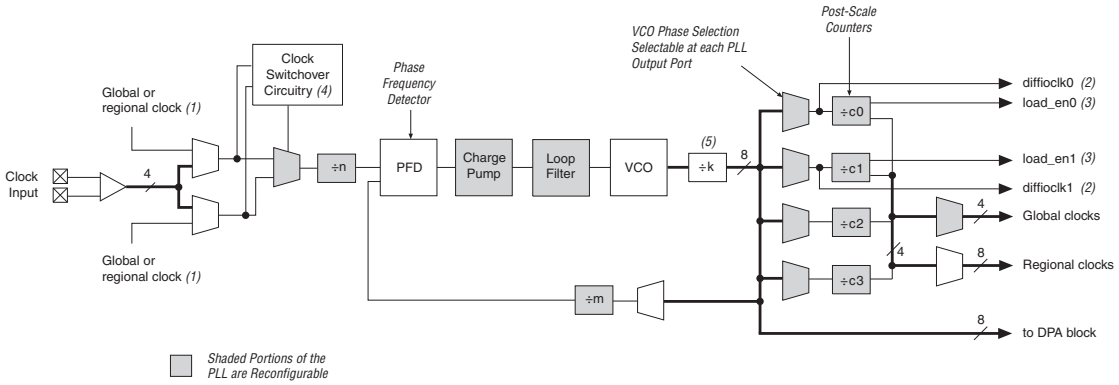

Notes to Figure 2–45:

(1) The global or regional clock input can be driven by an output from another PLL, a pin-driven dedicated global or regional clock, or through a clock control block, provided the clock control block is fed by an output from another PLL or a pin-driven dedicated global or regional clock. An internally generated global signal cannot drive the PLL.

(2) In high-speed differential I/O support mode, this high-speed PLL clock feeds the SERDES circuitry. Stratix II devices only support one rate of data transfer per fast PLL in high-speed differential I/O support mode.

(3) This signal is a differential I/O SERDES control signal.

(4) Stratix II fast PLLs only support manual clock switchover.

(5) If the design enables this ÷2 counter, then the device can use a VCO frequency range of 150 to 520 MHz.

See the *PLLs in Stratix II & Stratix II GX Devices* chapter in volume 2 of the *Stratix II Device Handbook* or the *Stratix II GX Device Handbook* for more information on enhanced and fast PLLs. See "High-Speed Differential I/O with DPA Support" on page 2–96 for more information on high-speed differential I/O support.

I/O Structure

The Stratix II IOEs provide many features, including:

- Dedicated differential and single-ended I/O buffers
- 3.3-V, 64-bit, 66-MHz PCI compliance
- 3.3-V, 64-bit, 133-MHz PCI-X 1.0 compliance
- Joint Test Action Group (JTAG) boundary-scan test (BST) support
- On-chip driver series termination
- On-chip parallel termination
- On-chip termination for differential standards
- Programmable pull-up during configuration

- Output drive strength control
- Tri-state buffers
- Bus-hold circuitry
- Programmable pull-up resistors
- Programmable input and output delays
- Open-drain outputs
- DQ and DQS I/O pins
- Double data rate (DDR) registers

The IOE in Stratix II devices contains a bidirectional I/O buffer, six registers, and a latch for a complete embedded bidirectional single data rate or DDR transfer. Figure 2–46 shows the Stratix II IOE structure. The IOE contains two input registers (plus a latch), two output registers, and two output enable registers. The design can use both input registers and the latch to capture DDR input and both output registers to drive DDR outputs. Additionally, the design can use the output enable (OE) register for fast clock-to-output enable timing. The negative edge-clocked OE register is used for DDR SDRAM interfacing. The Quartus II software automatically duplicates a single OE register that controls multiple output or bidirectional pins.

Figure 2–46. Stratix II IOE Structure

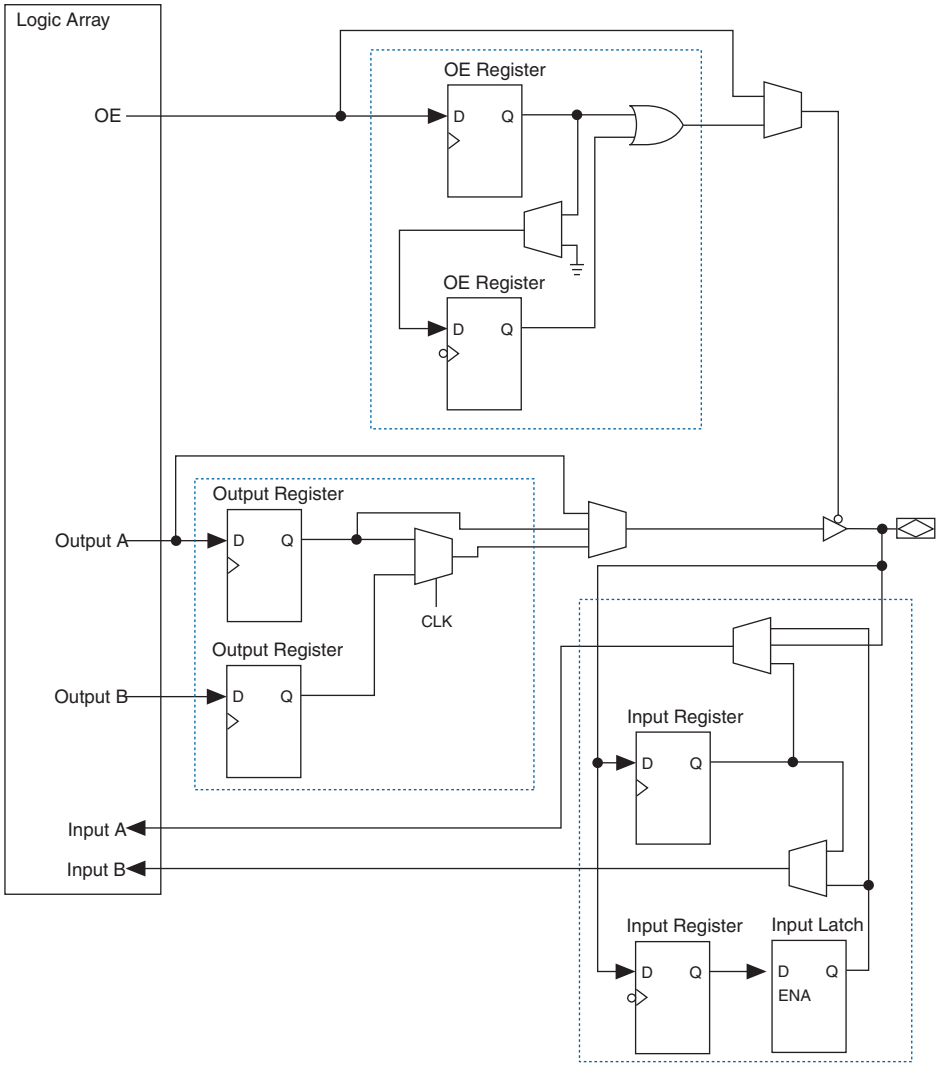

The IOEs are located in I/O blocks around the periphery of the Stratix II device. There are up to four IOEs per row I/O block and four IOEs per column I/O block. The row I/O blocks drive row, column, or direct link interconnects. The column I/O blocks drive column interconnects. Figure 2–47 shows how a row I/O block connects to the logic array. Figure 2–48 shows how a column I/O block connects to the logic array.

Figure 2–47. Row I/O Block Connection to the Interconnect *Note (1)*

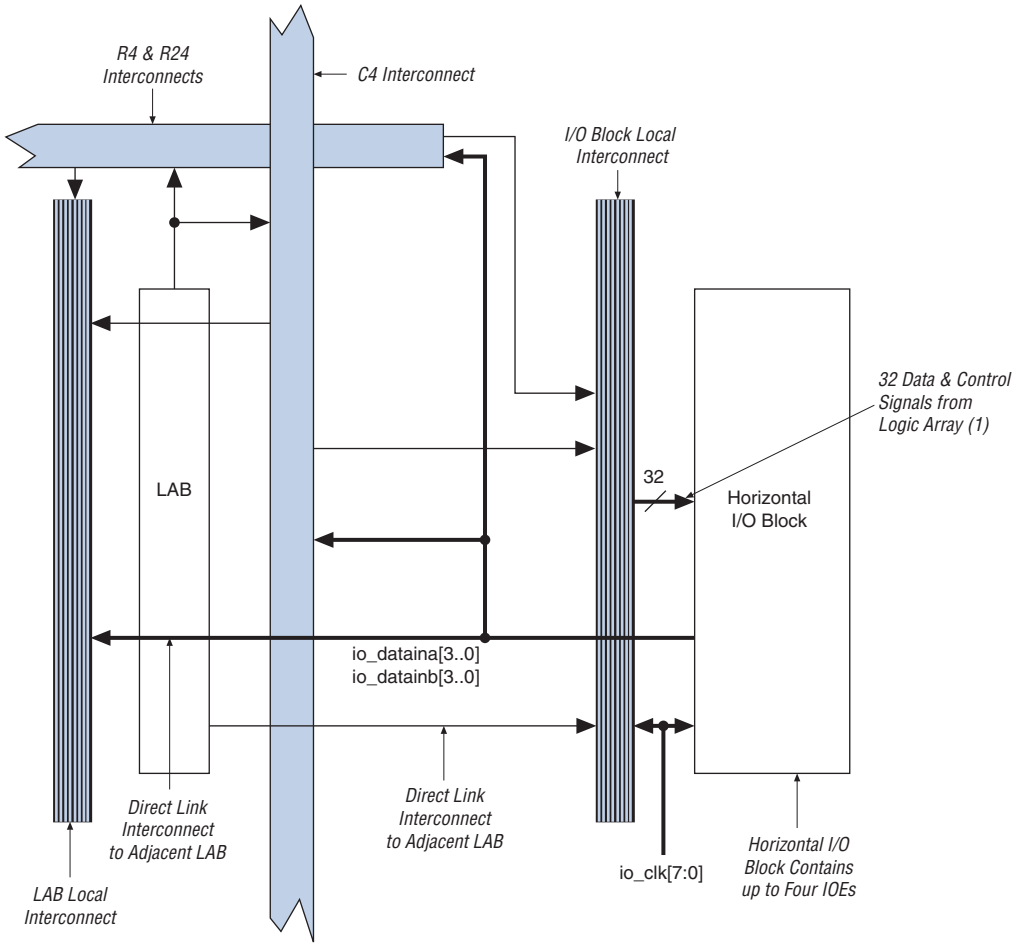

Note to Figure 2–47:

(1) The 32 data and control signals consist of eight data out lines: four lines each for DDR applications `io_dataouta[3..0]` and `io_dataoutb[3..0]`, four output enables `io_oe[3..0]`, four input clock enables `io_ce_in[3..0]`, four output clock enables `io_ce_out[3..0]`, four clocks `io_clk[3..0]`, four asynchronous clear and preset signals `io_aclr/apreset[3..0]`, and four synchronous clear and preset signals `io_sclr/spreset[3..0]`.

Figure 2–48. Column I/O Block Connection to the Interconnect *Note (1)*

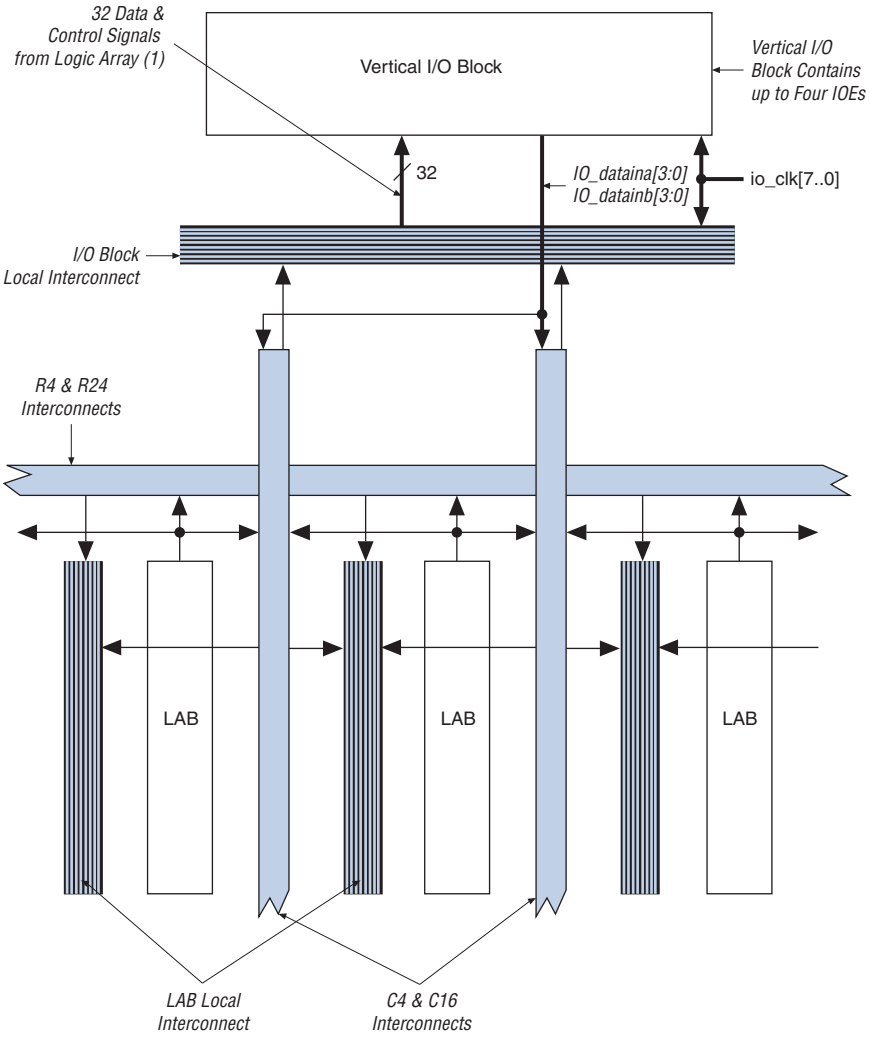

Note to Figure 2–48:

(1) The 32 data and control signals consist of eight data out lines: four lines each for DDR applications `io_dataouta[3..0]` and `io_dataoutb[3..0]`, four output enables `io_oe[3..0]`, four input clock enables `io_ce_in[3..0]`, four output clock enables `io_ce_out[3..0]`, four clocks `io_clk[3..0]`, four asynchronous clear and preset signals `io_aclr/apreset[3..0]`, and four synchronous clear and preset signals `io_sclr/spreset[3..0]`.

There are 32 control and data signals that feed each row or column I/O block. These control and data signals are driven from the logic array. The row or column IOE clocks, `io_clk[7..0]`, provide a dedicated routing resource for low-skew, high-speed clocks. I/O clocks are generated from global or regional clocks (see the "PLLs & Clock Networks" section). Figure 2–49 illustrates the signal paths through the I/O block.

Figure 2–49. Signal Path through the I/O Block

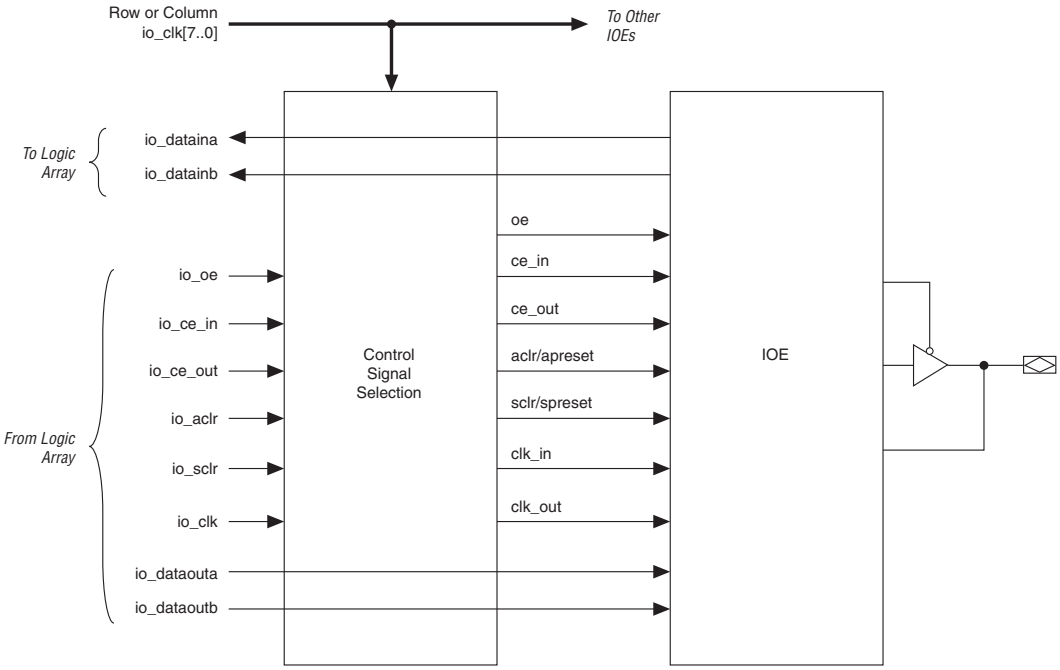

Each IOE contains its own control signal selection for the following control signals: `oe`, `ce_in`, `ce_out`, `aclr/apreset`, `sclr/spreset`, `clk_in`, and `clk_out`. Figure 2–50 illustrates the control signal selection.

Figure 2–50. Control Signal Selection per IOE

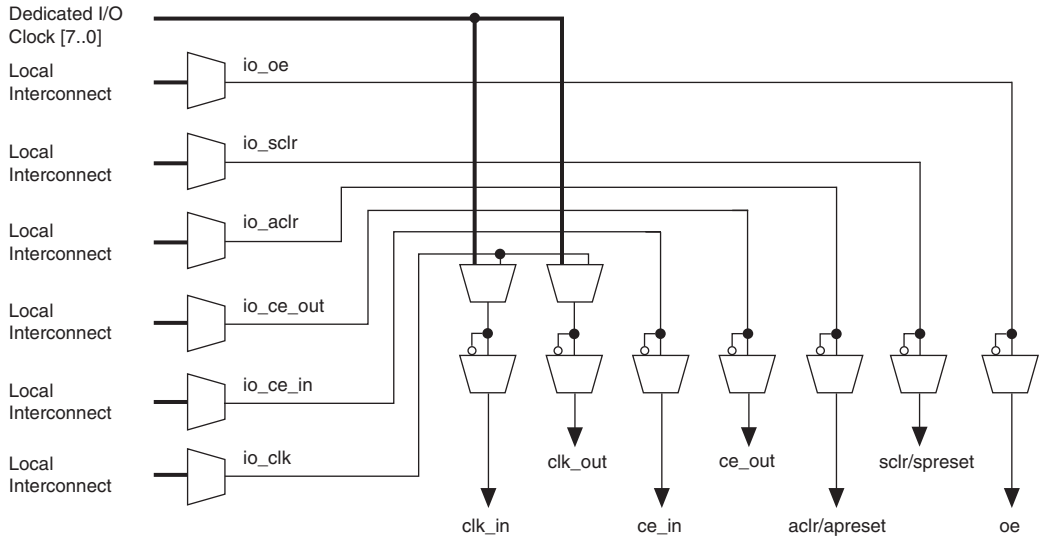

Notes to Figure 2–50:

(1) Control signals `ce_in`, `ce_out`, `aclr/apreset`, `sclr/spreset`, and `oe` can be global signals even though their control selection multiplexers are not directly fed by the `ioe_clk[7..0]` signals. The `ioe_clk` signals can drive the I/O local interconnect, which then drives the control selection multiplexers.

In normal bidirectional operation, the input register can be used for input data requiring fast setup times. The input register can have its own clock input and clock enable separate from the OE and output registers. The output register can be used for data requiring fast clock-to-output performance. The OE register can be used for fast clock-to-output enable timing. The OE and output register share the same clock source and the same clock enable source from local interconnect in the associated LAB, dedicated I/O clocks, and the column and row interconnects.

Figure 2–51 shows the IOE in bidirectional configuration.

Figure 2–51. Stratix II IOE in Bidirectional I/O Configuration *Note (1)*

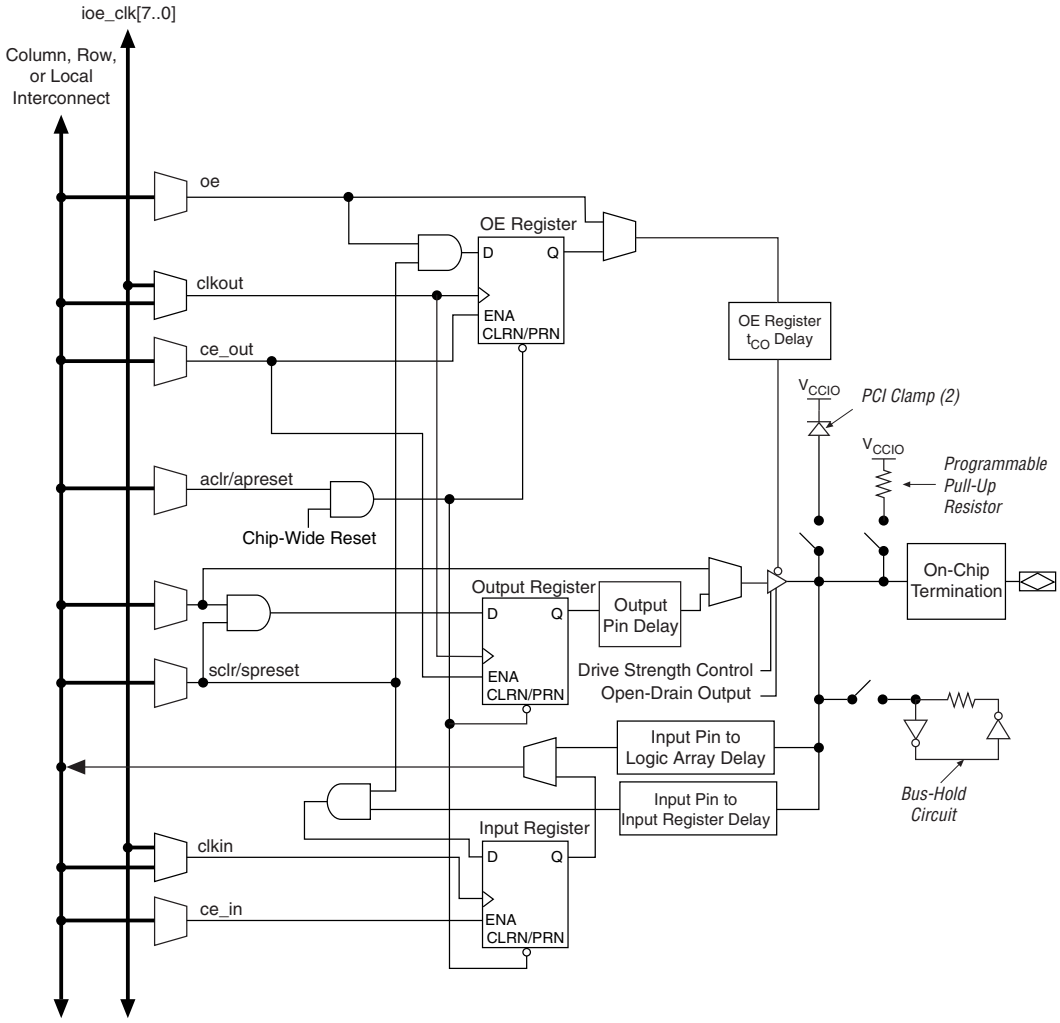

Notes to Figure 2–51:

(1) All input signals to the IOE can be inverted at the IOE.

(2) The optional PCI clamp is only available on column I/O pins.

The Stratix II device IOE includes programmable delays that can be activated to ensure input IOE register-to-logic array register transfers, input pin-to-logic array register transfers, or output IOE register-to-pin transfers.

A path in which a pin directly drives a register may require the delay to ensure zero hold time, whereas a path in which a pin drives a register through combinational logic may not require the delay. Programmable delays exist for decreasing input-pin-to-logic-array and IOE input register delays. The Quartus II Compiler can program these delays to automatically minimize setup time while providing a zero hold time. Programmable delays can increase the register-to-pin delays for output and/or output enable registers. Programmable delays are no longer required to ensure zero hold times for logic array register-to-IOE register transfers. The Quartus II Compiler can create the zero hold time for these transfers. Table 2–13 shows the programmable delays for Stratix II devices.

Table 2–13. Stratix II Programmable Delay Chain

Programmable Delays	Quartus II Logic Option
Input pin to logic array delay	Input delay from pin to internal cells
Input pin to input register delay	Input delay from pin to input register
Output pin delay	Delay from output register to output pin
Output enable register t_{CO} delay	Delay to output enable pin

The IOE registers in Stratix II devices share the same source for clear or preset. You can program preset or clear for each individual IOE. You can also program the registers to power up high or low after configuration is complete. If programmed to power up low, an asynchronous clear can control the registers. If programmed to power up high, an asynchronous preset can control the registers. This feature prevents the inadvertent activation of another device's active-low input upon power-up. If one register in an IOE uses a preset or clear signal then all registers in the IOE must use that same signal if they require preset or clear. Additionally, a synchronous reset signal is available for the IOE registers.

Double Data Rate I/O Pins

Stratix II devices have six registers in the IOE, which support DDR interfacing by clocking data on both positive and negative clock edges. The IOEs in Stratix II devices support DDR inputs, DDR outputs, and bidirectional DDR modes.

When using the IOE for DDR inputs, the two input registers clock double rate input data on alternating edges. An input latch is also used in the IOE for DDR input acquisition. The latch holds the data that is present during the clock high times. This allows both bits of data to be synchronous with the same clock edge (either rising or falling). Figure 2–52 shows an IOE configured for DDR input. Figure 2–53 shows the DDR input timing diagram.

Figure 2–52. Stratix II IOE in DDR Input I/O Configuration *Notes (1), (2), (3)*

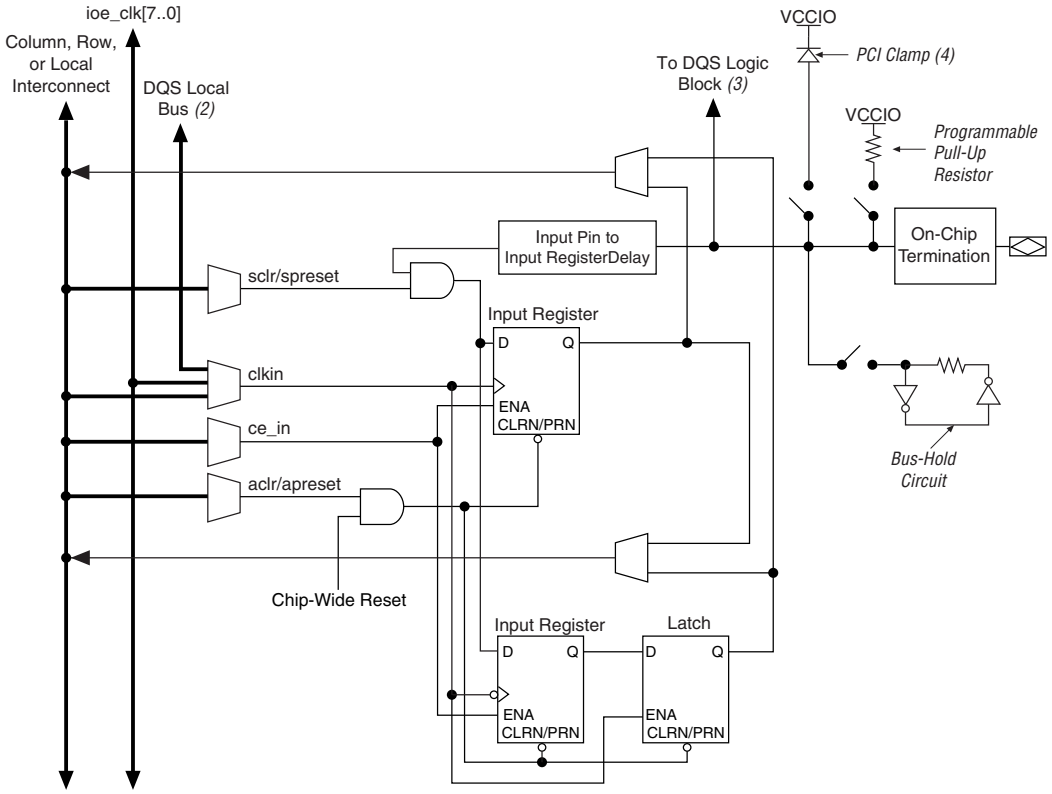

Notes to Figure 2–52:

(1) All input signals to the IOE can be inverted at the IOE.
(2) This signal connection is only allowed on dedicated DQ function pins.
(3) This signal is for dedicated DQS function pins only.
(4) The optional PCI clamp is only available on column I/O pins.

Figure 2–53. Input Timing Diagram in DDR Mode

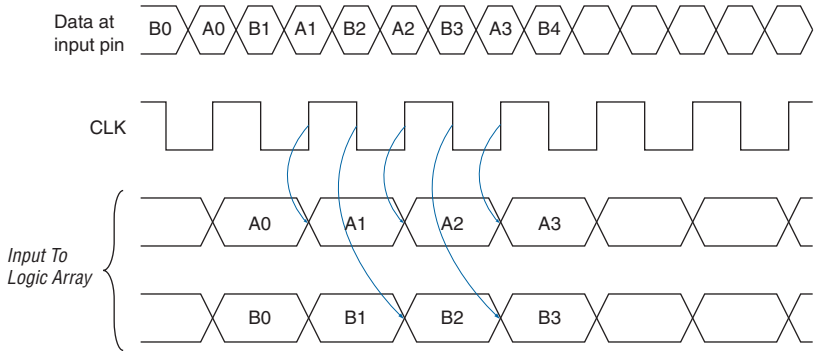

When using the IOE for DDR outputs, the two output registers are configured to clock two data paths from ALMs on rising clock edges. These output registers are multiplexed by the clock to drive the output pin at a ×2 rate. One output register clocks the first bit out on the clock high time, while the other output register clocks the second bit out on the clock low time. Figure 2–54 shows the IOE configured for DDR output. Figure 2–55 shows the DDR output timing diagram.

Figure 2–54. Stratix II IOE in DDR Output I/O Configuration *Notes (1), (2)*

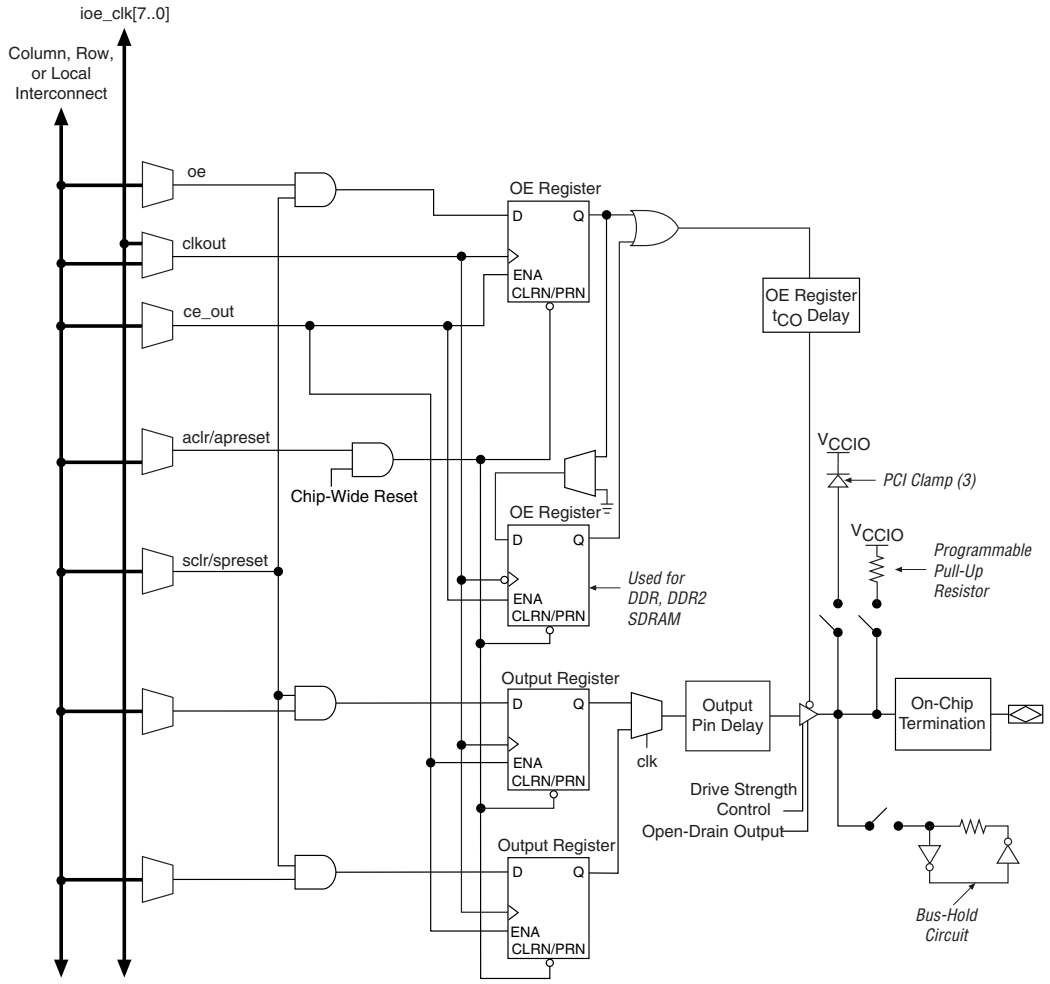

Notes to Figure 2–54:

(1) All input signals to the IOE can be inverted at the IOE.

(2) The tri-state buffer is active low. The DDIO megafunction represents the tri-state buffer as active-high with an inverter at the OE register data port. Similarly, the `aclr` and `apreset` signals are also active-high at the input ports of the DDIO megafunction.

(3) The optional PCI clamp is only available on column I/O pins.

Figure 2–55. Output Timing Diagram in DDR Mode

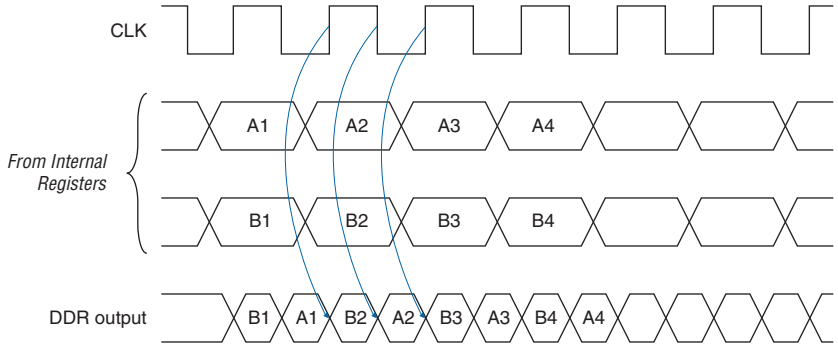

The Stratix II IOE operates in bidirectional DDR mode by combining the DDR input and DDR output configurations. The negative-edge-clocked OE register holds the OE signal inactive until the falling edge of the clock. This is done to meet DDR SDRAM timing requirements.

External RAM Interfacing

In addition to the six I/O registers in each IOE, Stratix II devices also have dedicated phase-shift circuitry for interfacing with external memory interfaces. Stratix II devices support DDR and DDR2 SDRAM, QDR II SRAM, RLDRAM II, and SDR SDRAM memory interfaces. In every Stratix II device, the I/O banks at the top (banks 3 and 4) and bottom (banks 7 and 8) of the device support DQ and DQS signals with DQ bus modes of ×4, ×8/×9, ×16/×18, or ×32/×36. Table 2–14 shows the number of DQ and DQS buses that are supported per device.

Table 2–14. DQS & DQ Bus Mode Support (Part 1 of 2) *Note (1)*

Device	Package	Number of ×4 Groups	Number of ×8/×9 Groups	Number of ×16/×18 Groups	Number of ×32/×36 Groups
EP2S15	484-pin FineLine BGA	8	4	0	0
	672-pin FineLine BGA	18	8	4	0
EP2S30	484-pin FineLine BGA	8	4	0	0
	672-pin FineLine BGA	18	8	4	0
EP2S60	484-pin FineLine BGA	8	4	0	0
	672-pin FineLine BGA	18	8	4	0
	1,020-pin FineLine BGA	36	18	8	4

Table 2–14. DQS & DQ Bus Mode Support (Part 2 of 2) *Note (1)*

Device	Package	Number of ×4 Groups	Number of ×8/×9 Groups	Number of ×16/×18 Groups	Number of ×32/×36 Groups
EP2S90	484-pin Hybrid FineLine BGA	8	4	0	0
	780-pin FineLine BGA	18	8	4	0
	1,020-pin FineLine BGA	36	18	8	4
	1,508-pin FineLine BGA	36	18	8	4
EP2S130	780-pin FineLine BGA	18	8	4	0
	1,020-pin FineLine BGA	36	18	8	4
	1,508-pin FineLine BGA	36	18	8	4
EP2S180	1,020-pin FineLine BGA	36	18	8	4
	1,508-pin FineLine BGA	36	18	8	4

Notes to Table 2–14:
(1) Check the pin table for each DQS/DQ group in the different modes.

A compensated delay element on each DQS pin automatically aligns input DQS synchronization signals with the data window of their corresponding DQ data signals. The DQS signals drive a local DQS bus in the top and bottom I/O banks. This DQS bus is an additional resource to the I/O clocks and is used to clock DQ input registers with the DQS signal.

The Stratix II device has two phase-shifting reference circuits, one on the top and one on the bottom of the device. The circuit on the top controls the compensated delay elements for all DQS pins on the top. The circuit on the bottom controls the compensated delay elements for all DQS pins on the bottom.

Each phase-shifting reference circuit is driven by a system reference clock, which must have the same frequency as the DQS signal. Clock pins `CLK[15..12]p` feed the phase circuitry on the top of the device and clock pins `CLK[7..4]p` feed the phase circuitry on the bottom of the device. In addition, PLL clock outputs can also feed the phase-shifting reference circuits.

Figure 2–56 illustrates the phase-shift reference circuit control of each DQS delay shift on the top of the device. This same circuit is duplicated on the bottom of the device.

Figure 2–56. DQS Phase-Shift Circuitry *Notes (1), (2), (3), (4)*

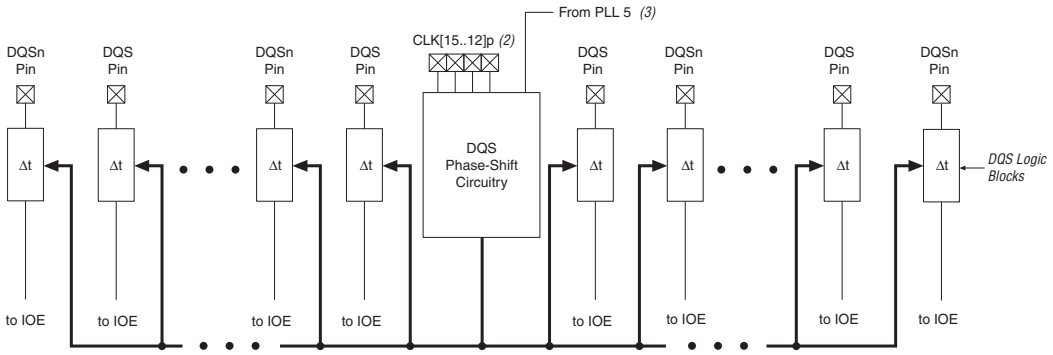

Notes to Figure 2–56:

(1) There are up to 18 pairs of DQS and DQSn pins available on the top or the bottom of the Stratix II device. There are up to 10 pairs on the right side and 8 pairs on the left side of the DQS phase-shift circuitry.

(2) The Δt module represents the DQS logic block.

(3) Clock pins `CLK[15..12]p` feed the phase-shift circuitry on the top of the device and clock pins `CLK[7..4]p` feed the phase circuitry on the bottom of the device. You can also use a PLL clock output as a reference clock to the phase-shift circuitry.

(4) You can only use PLL 5 to feed the DQS phase-shift circuitry on the top of the device and PLL 6 to feed the DQS phase-shift circuitry on the bottom of the device.

These dedicated circuits combined with enhanced PLL clocking and phase-shift ability provide a complete hardware solution for interfacing to high-speed memory.

For more information on external memory interfaces, refer to the *External Memory Interfaces in Stratix II & Stratix II GX Devices* chapter in volume 2 of the *Stratix II Device Handbook* or the *Stratix II GX Device Handbook*.

Programmable Drive Strength

The output buffer for each Stratix II device I/O pin has a programmable drive strength control for certain I/O standards. The LVTTL, LVCMOS, SSTL, and HSTL standards have several levels of drive strength that the user can control. The default setting used in the Quartus II software is the maximum current strength setting that is used to achieve maximum I/O performance. For all I/O standards, the minimum setting is the lowest drive strength that guarantees the I_{OH}/I_{OL} of the standard. Using minimum settings provides signal slew rate control to reduce system noise and signal overshoot.

Table 2–15 shows the possible settings for the I/O standards with drive strength control.

Table 2–15. Programmable Drive Strength *Note (1)*

I/O Standard	I_{OH} / I_{OL} Current Strength Setting (mA) for Column I/O Pins	I_{OH} / I_{OL} Current Strength Setting (mA) for Row I/O Pins
3.3-V LVTTL	24, 20, 16, 12, 8, 4	12, 8, 4
3.3-V LVCMOS	24, 20, 16, 12, 8, 4	8, 4
2.5-V LVTTL/LVCMOS	16, 12, 8, 4	12, 8, 4
1.8-V LVTTL/LVCMOS	12, 10, 8, 6, 4, 2	8, 6, 4, 2
1.5-V LVCMOS	8, 6, 4, 2	4, 2
SSTL-2 Class I	12, 8	12, 8
SSTL-2 Class II	24, 20, 16	16
SSTL-18 Class I	12, 10, 8, 6, 4	10, 8, 6, 4
SSTL-18 Class II	20, 18, 16, 8	-
HSTL-18 Class I	12, 10, 8, 6, 4	12, 10, 8, 6, 4
HSTL-18 Class II	20, 18, 16	-
HSTL-15 Class I	12, 10, 8, 6, 4	8, 6, 4
HSTL-15 Class II	20, 18, 16	-

Note to Table 2–15:

(1) The Quartus II software default current setting is the maximum setting for each I/O standard.

Open-Drain Output

Stratix II devices provide an optional open-drain (equivalent to an open-collector) output for each I/O pin. This open-drain output enables the device to provide system-level control signals (e.g., interrupt and write-enable signals) that can be asserted by any of several devices.

Bus Hold

Each Stratix II device I/O pin provides an optional bus-hold feature. The bus-hold circuitry can weakly hold the signal on an I/O pin at its last-driven state. Since the bus-hold feature holds the last-driven state of the pin until the next input signal is present, you do not need an external pull-up or pull-down resistor to hold a signal level when the bus is tri-stated.

The bus-hold circuitry also pulls undriven pins away from the input threshold voltage where noise can cause unintended high-frequency switching. You can select this feature individually for each I/O pin. The bus-hold output drives no higher than V_{CCIO} to prevent overdriving signals. If the bus-hold feature is enabled, the programmable pull-up option cannot be used. Disable the bus-hold feature when the I/O pin has been configured for differential signals.

The bus-hold circuitry uses a resistor with a nominal resistance (R_{BH}) of approximately 7 kΩ to weakly pull the signal level to the last-driven state. See the *DC & Switching Characteristics* chapter in the *Stratix II Device Handbook, Volume 1*, for the specific sustaining current driven through this resistor and overdrive current used to identify the next-driven input level. This information is provided for each V_{CCIO} voltage level.

The bus-hold circuitry is active only after configuration. When going into user mode, the bus-hold circuit captures the value on the pin present at the end of configuration.

Programmable Pull-Up Resistor

Each Stratix II device I/O pin provides an optional programmable pull-up resistor during user mode. If you enable this feature for an I/O pin, the pull-up resistor (typically 25 kΩ) weakly holds the output to the V_{CCIO} level of the output pin's bank.

Programmable pull-up resistors are only supported on user I/O pins, and are not supported on dedicated configuration pins, JTAG pins or dedicated clock pins.

Advanced I/O Standard Support

Stratix II device IOEs support the following I/O standards:

- 3.3-V LVTTL/LVCMOS
- 2.5-V LVTTL/LVCMOS
- 1.8-V LVTTL/LVCMOS
- 1.5-V LVCMOS
- 3.3-V PCI
- 3.3-V PCI-X mode 1
- LVDS
- LVPECL (on input and output clocks only)
- HyperTransport technology
- Differential 1.5-V HSTL Class I and II
- Differential 1.8-V HSTL Class I and II
- Differential SSTL-18 Class I and II
- Differential SSTL-2 Class I and II

- 1.5-V HSTL Class I and II
- 1.8-V HSTL Class I and II
- 1.2-V HSTL
- SSTL-2 Class I and II
- SSTL-18 Class I and II

Table 2–16 describes the I/O standards supported by Stratix II devices.

Table 2–16. Stratix II Supported I/O Standards (Part 1 of 2)

I/O Standard	Type	Input Reference Voltage (V_{REF}) (V)	Output Supply Voltage (V_{CCIO}) (V)	Board Termination Voltage (V_{TT}) (V)
LVTTL	Single-ended	-	3.3	-
LVCMOS	Single-ended	-	3.3	-
2.5 V	Single-ended	-	2.5	-
1.8 V	Single-ended	-	1.8	-
1.5-V LVCMOS	Single-ended	-	1.5	-
3.3-V PCI	Single-ended	-	3.3	-
3.3-V PCI-X mode 1	Single-ended	-	3.3	-
LVDS	Differential	-	2.5 *(3)*	-
LVPECL *(1)*	Differential	-	3.3	-
HyperTransport technology	Differential	-	2.5	-
Differential 1.5-V HSTL Class I and II *(2)*	Differential	0.75	1.5	0.75
Differential 1.8-V HSTL Class I and II *(2)*	Differential	0.90	1.8	0.90
Differential SSTL-18 Class I and II *(2)*	Differential	0.90	1.8	0.90
Differential SSTL-2 Class I and II *(2)*	Differential	1.25	2.5	1.25
1.2-V HSTL*(4)*	Voltage-referenced	0.6	1.2	0.6
1.5-V HSTL Class I and II	Voltage-referenced	0.75	1.5	0.75
1.8-V HSTL Class I and II	Voltage-referenced	0.9	1.8	0.9
SSTL-18 Class I and II	Voltage-referenced	0.90	1.8	0.90

Table 2–16. Stratix II Supported I/O Standards (Part 2 of 2)

I/O Standard	Type	Input Reference Voltage (V_{REF}) (V)	Output Supply Voltage (V_{CCIO}) (V)	Board Termination Voltage (V_{TT}) (V)
SSTL-2 Class I and II	Voltage-referenced	1.25	2.5	1.25

Notes to Table 2–16:

(1) This I/O standard is only available on input and output column clock pins.

(2) This I/O standard is only available on input clock pins and DQS pins in I/O banks 3, 4, 7, and 8, and output clock pins in I/O banks 9,10, 11, and 12.

(3) V_{CCIO} is 3.3 V when using this I/O standard in input and output column clock pins (in I/O banks 9, 10, 11, and 12). The clock input pins supporting LVDS on banks 3, 4, 7, and 8 use V_{CCINT} for LVDS input operations and have no dependency on the V_{CCIO} level of the bank.

(4) 1.2-V HSTL is only supported in I/O banks 4,7, and 8.

For more information on I/O standards supported by Stratix II I/O banks, refer to the *Selectable I/O Standards in Stratix II & Stratix II GX Devices* chapter in volume 2 of the *Stratix II Device Handbook* or the *Stratix II GX Device Handbook*.

Stratix II devices contain eight I/O banks and four enhanced PLL external clock output banks, as shown in Figure 2–57. The four I/O banks on the right and left of the device contain circuitry to support high-speed differential I/O for LVDS and HyperTransport inputs and outputs. These banks support all Stratix II I/O standards except PCI or PCI-X I/O pins, and SSTL-18 Class II and HSTL outputs. The top and bottom I/O banks support all single-ended I/O standards. Additionally, enhanced PLL external clock output banks allow clock output capabilities such as differential support for SSTL and HSTL.

Figure 2–57. Stratix II I/O Banks *Notes (1), (2), (3), (4)*

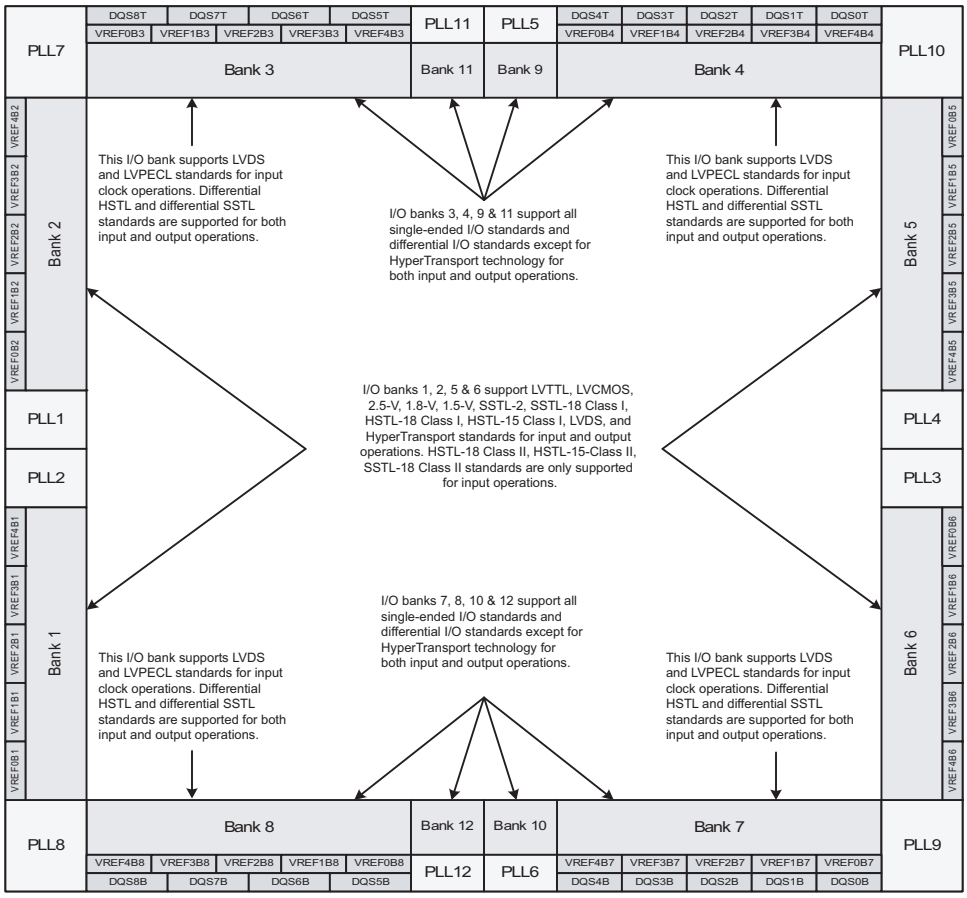

Notes to Figure 2–57:

(1) Figure 2–57 is a top view of the silicon die that corresponds to a reverse view for flip-chip packages. It is a graphical representation only.

(2) Depending on the size of the device, different device members have different numbers of V_{REF} groups. Refer to the pin list and the Quartus II software for exact locations.

(3) Banks 9 through 12 are enhanced PLL external clock output banks. These PLL banks utilize the adjacent V_{REF} group when voltage-referenced standards are implemented. For example, if an SSTL input is implemented in PLL bank 10, the voltage level at VREFB7 is the reference voltage level for the SSTL input.

(4) Horizontal I/O banks feature SERDES and DPA circuitry for high speed differential I/O standards. See the *High Speed Differential I/O Interfaces in Stratix II & Stratix II GX Devices* chapter of the *Stratix II Device Handbook, Volume 2* or the *Stratix II GX Device Handbook, Volume 2* for more information on differential I/O standards.

Each I/O bank has its own VCCIO pins. A single device can support 1.5-, 1.8-, 2.5-, and 3.3-V interfaces; each bank can support a different V_{CCIO} level independently. Each bank also has dedicated VREF pins to support the voltage-referenced standards (such as SSTL-2). The PLL banks utilize the adjacent VREF group when voltage-referenced standards are implemented. For example, if an SSTL input is implemented in PLL bank 10, the voltage level at VREFB7 is the reference voltage level for the SSTL input.

I/O pins that reside in PLL banks 9 through 12 are powered by the VCC_PLL<*5, 6, 11, or 12*>_OUT pins, respectively. The EP2S60F484, EP2S60F780, EP2S90H484, EP2S90F780, and EP2S130F780 devices do not support PLLs 11 and 12. Therefore, any I/O pins that reside in bank 11 are powered by the VCCIO3 pin, and any I/O pins that reside in bank 12 are powered by the VCCIO8 pin.

Each I/O bank can support multiple standards with the same V_{CCIO} for input and output pins. Each bank can support one V_{REF} voltage level. For example, when V_{CCIO} is 3.3 V, a bank can support LVTTL, LVCMOS, and 3.3-V PCI for inputs and outputs.

On-Chip Termination

Stratix II devices provide differential (for the LVDS or HyperTransport technology I/O standard), series, and parallel on-chip termination to reduce reflections and maintain signal integrity. On-chip termination simplifies board design by minimizing the number of external termination resistors required. Termination can be placed inside the package, eliminating small stubs that can still lead to reflections.

Stratix II devices provide four types of termination:

- Differential termination (R_D)
- Series termination (R_S) without calibration
- Series termination (R_S) with calibration
- Parallel termination (R_T) with calibration

Table 2–17 shows the Stratix II on-chip termination support per I/O bank.

Table 2–17. On-Chip Termination Support by I/O Banks (Part 1 of 2)

On-Chip Termination Support	I/O Standard Support	Top & Bottom Banks	Left & Right Banks
Series termination without calibration	3.3-V LVTTL	✓	✓
	3.3-V LVCMOS	✓	✓
	2.5-V LVTTL	✓	✓
	2.5-V LVCMOS	✓	✓
	1.8-V LVTTL	✓	✓
	1.8-V LVCMOS	✓	✓
	1.5-V LVTTL	✓	✓
	1.5-V LVCMOS	✓	✓
	SSTL-2 Class I and II	✓	✓
	SSTL-18 Class I	✓	✓
	SSTL-18 Class II	✓	
	1.8-V HSTL Class I	✓	✓
	1.8-V HSTL Class II	✓	
	1.5-V HSTL Class I	✓	✓
	1.2-V HSTL	✓	

Table 2–17. On-Chip Termination Support by I/O Banks (Part 2 of 2)

On-Chip Termination Support	I/O Standard Support	Top & Bottom Banks	Left & Right Banks
Series termination with calibration	3.3-V LVTTL	✓	
	3.3-V LVCMOS	✓	
	2.5-V LVTTL	✓	
	2.5-V LVCMOS	✓	
	1.8-V LVTTL	✓	
	1.8-V LVCMOS	✓	
	1.5-V LVTTL	✓	
	1.5-V LVCMOS	✓	
	SSTL-2 Class I and II	✓	
	SSTL-18 Class I and II	✓	
	1.8-V HSTL Class I	✓	
	1.8-V HSTL Class II	✓	
	1.5-V HSTL Class I	✓	
	1.2-V HSTL	✓	
Parallel termination with calibration	SSTL-2 Class I and II	✓	
	SSTL-18 Class I and II	✓	
	1.8-V HSTL Class I	✓	
	1.8-V HSTL Class II	✓	
	1.5-V HSTL Class I and II	✓	
	1.2-V HSTL	✓	
Differential termination *(1)*	LVDS		✓
	HyperTransport technology		✓

Note to Table 2–17:

(1) Clock pins `CLK1`, `CLK3`, `CLK9`, `CLK11`, and pins `FPLL[7..10]CLK` do not support differential on-chip termination. Clock pins `CLK0`, `CLK2`, `CLK8`, and `CLK10` do support differential on-chip termination. Clock pins in the top and bottom banks (`CLK[4..7, 12..15]`) do not support differential on-chip termination.

Differential On-Chip Termination

Stratix II devices support internal differential termination with a nominal resistance value of 100 Ω for LVDS or HyperTransport technology input receiver buffers. LVPECL input signals (supported on clock pins only) require an external termination resistor. Differential on-chip termination is supported across the full range of supported differential data rates as shown in the *DC & Switching Characteristics* chapter in volume 1 of the *Stratix II Device Handbook*.

For more information on differential on-chip termination, refer to the *High-Speed Differential I/O Interfaces with DPA in Stratix II & Stratix II GX Devices* chapter in volume 2 of the *Stratix II Device Handbook* or the *Stratix II GX Device Handbook*.

For more information on tolerance specifications for differential on-chip termination, refer to the *DC & Switching Characteristics* chapter in volume 1 of the *Stratix II Device Handbook.*

On-Chip Series Termination Without Calibration

Stratix II devices support driver impedance matching to provide the I/O driver with controlled output impedance that closely matches the impedance of the transmission line. As a result, reflections can be significantly reduced. Stratix II devices support on-chip series termination for single-ended I/O standards with typical R_S values of 25 and 50 Ω. Once matching impedance is selected, current drive strength is no longer selectable. Table 2–17 shows the list of output standards that support on-chip series termination without calibration.

On-Chip Series Termination with Calibration

Stratix II devices support on-chip series termination with calibration in column I/O pins in top and bottom banks. There is one calibration circuit for the top I/O banks and one circuit for the bottom I/O banks. Each on-chip series termination calibration circuit compares the total impedance of each I/O buffer to the external 25- or 50-Ω resistors connected to the `RUP` and `RDN` pins, and dynamically enables or disables the transistors until they match. Calibration occurs at the end of device configuration. Once the calibration circuit finds the correct impedance, it powers down and stops changing the characteristics of the drivers.

For more information on series on-chip termination supported by Stratix II devices, refer to the *Selectable I/O Standards in Stratix II & Stratix II GX Devices* chapter in volume 2 of the *Stratix II Device Handbook* or the *Stratix II GX Device Handbook*.

For more information on tolerance specifications for on-chip termination with calibration, refer to the *DC & Switching Characteristics* chapter in volume 1 of the *Stratix II Device Handbook*.

On-Chip Parallel Termination with Calibration

Stratix II devices support on-chip parallel termination with calibration for column I/O pins only. There is one calibration circuit for the top I/O banks and one circuit for the bottom I/O banks. Each on-chip parallel termination calibration circuit compares the total impedance of each I/O buffer to the external 50-Ω resistors connected to the RUP and RDN pins and dynamically enables or disables the transistors until they match. Calibration occurs at the end of device configuration. Once the calibration circuit finds the correct impedance, it powers down and stops changing the characteristics of the drivers.

On-chip parallel termination with calibration is only supported for input pins.

For more information on on-chip termination supported by Stratix II devices, refer to the *Selectable I/O Standards in Stratix II & Stratix II GX Devices* chapter in volume 2 of the *Stratix II Device Handbook* or the *Stratix II GX Device Handbook*.

For more information on tolerance specifications for on-chip termination with calibration, refer to the *DC & Switching Characteristics* chapter in volume 1 of the *Stratix II Device Handbook.*

MultiVolt I/O Interface

The Stratix II architecture supports the MultiVolt I/O interface feature that allows Stratix II devices in all packages to interface with systems of different supply voltages.

The Stratix II `VCCINT` pins must always be connected to a 1.2-V power supply. With a 1.2-V V_{CCINT} level, input pins are 1.5-, 1.8-, 2.5-, and 3.3-V tolerant. The `VCCIO` pins can be connected to either a 1.5-, 1.8-, 2.5-, or 3.3-V power supply, depending on the output requirements. The output levels are compatible with systems of the same voltage as the power supply (for example, when `VCCIO` pins are connected to a 1.5-V power supply, the output levels are compatible with 1.5-V systems).

The Stratix II `VCCPD` power pins must be connected to a 3.3-V power supply. These power pins are used to supply the pre-driver power to the output buffers, which increases the performance of the output pins. The `VCCPD` pins also power configuration input pins and JTAG input pins.

Table 2–18 summarizes Stratix II MultiVolt I/O support.

Table 2–18. Stratix II MultiVolt I/O Support *Note (1)*

V_{CCIO} (V)	Input Signal (V)					Output Signal (V)					
	1.2	1.5	1.8	2.5	3.3	1.2	1.5	1.8	2.5	3.3	5.0
1.2	*(4)*	✓ *(2)*	✓ *(2)*	✓ *(2)*	✓ *(2)*	✓ *(4)*					
1.5	*(4)*	✓	✓	✓ *(2)*	✓ *(2)*	✓ *(3)*	✓				
1.8	*(4)*	✓	✓	✓ *(2)*	✓ *(2)*	✓ *(3)*	✓ *(3)*	✓			
2.5	*(4)*			✓	✓	✓ *(3)*	✓ *(3)*	✓ *(3)*	✓		
3.3	*(4)*			✓	✓	✓ *(3)*	✓ *(3)*	✓ *(3)*	✓ *(3)*	✓	✓

Notes to Table 2–18:

(1) To drive inputs higher than V_{CCIO} but less than 4.0 V, disable the PCI clamping diode and select the **Allow LVTTL and LVCMOS input levels to overdrive input buffer** option in the Quartus II software.

(2) The pin current may be slightly higher than the default value. You must verify that the driving device's V_{OL} maximum and V_{OH} minimum voltages do not violate the applicable Stratix II V_{IL} maximum and V_{IH} minimum voltage specifications.

(3) Although V_{CCIO} specifies the voltage necessary for the Stratix II device to drive out, a receiving device powered at a different level can still interface with the Stratix II device if it has inputs that tolerate the V_{CCIO} value.

(4) Stratix II devices do not support 1.2-V LVTTL and 1.2-V LVCMOS. Stratix II devices support 1.2-V HSTL.

The `TDO` and `nCEO` pins are powered by V_{CCIO} of the bank that they reside in. `TDO` is in I/O bank 4 and `nCEO` is in I/O bank 7.

Ideally, the V_{CC} supplies for the I/O buffers of any two connected pins are at the same voltage level. This may not always be possible depending on the V_{CCIO} level of `TDO` and `nCEO` pins on master devices and the configuration voltage level chosen by `VCCSEL` on slave devices. Master and slave devices can be in any position in the chain. Master indicates that it is driving out `TDO` or `nCEO` to a slave device.

For multi-device passive configuration schemes, the `nCEO` pin of the master device drives the `nCE` pin of the slave device. The `VCCSEL` pin on the slave device selects which input buffer is used for `nCE`. When `VCCSEL` is logic high, it selects the 1.8-V/1.5-V buffer powered by V_{CCIO}. When `VCCSEL` is logic low it selects the 3.3-V/2.5-V input buffer powered by V_{CCPD}. The ideal case is to have the V_{CCIO} of the `nCEO` bank in a master device match the `VCCSEL` settings for the `nCE` input buffer of the slave device it is connected to, but that may not be possible depending on the application. Table 2–19 contains board design recommendations to ensure that `nCEO` can successfully drive `nCE` for all power supply combinations.

Table 2–19. Board Design Recommendations for nCEO

nCE Input Buffer Power in I/O Bank 3	Stratix II nCEO V_{CCIO} Voltage Level in I/O Bank 7				
	V_{CCIO} = 3.3 V	V_{CCIO} = 2.5 V	V_{CCIO} = 1.8 V	V_{CCIO} = 1.5 V	V_{CCIO} = 1.2 V
VCCSEL high (V_{CCIO} Bank 3 = 1.5 V)	✓ (1), (2)	✓ (3), (4)	✓ (5)	✓	✓
VCCSEL high (V_{CCIO} Bank 3 = 1.8 V)	✓ (1), (2)	✓ (3), (4)	✓	✓	Level shifter required
VCCSEL low (nCE Powered by V_{CCPD} = 3.3V)	✓	✓ (4)	✓ (6)	Level shifter required	Level shifter required

Notes to Table 2–19:
(1) Input buffer is 3.3-V tolerant.
(2) The nCEO output buffer meets V_{OH} (MIN) = 2.4 V.
(3) Input buffer is 2.5-V tolerant.
(4) The nCEO output buffer meets V_{OH} (MIN) = 2.0 V.
(5) Input buffer is 1.8-V tolerant.
(6) An external 250-Ω pull-up resistor is not required, but recommended if signal levels on the board are not optimal.

For JTAG chains, the TDO pin of the first device drives the TDI pin of the second device in the chain. The V_{CCSEL} input on JTAG input I/O cells (TCK, TMS, TDI, and TRST) is internally hardwired to GND selecting the 3.3-V/2.5-V input buffer powered by V_{CCPD}. The ideal case is to have the V_{CCIO} of the TDO bank from the first device to match the V_{CCSEL} settings for TDI on the second device, but that may not be possible depending on the application. Table 2–20 contains board design recommendations to ensure proper JTAG chain operation.

Table 2–20. Supported TDO/TDI Voltage Combinations (Part 1 of 2)

Device	TDI Input Buffer Power	Stratix II TDO V_{CCIO} Voltage Level in I/O Bank 4				
		V_{CCIO} = 3.3 V	V_{CCIO} = 2.5 V	V_{CCIO} = 1.8 V	V_{CCIO} = 1.5 V	V_{CCIO} = 1.2 V
Stratix II	Always V_{CCPD} (3.3V)	✓ (1)	✓ (2)	✓ (3)	Level shifter required	Level shifter required

Table 2–20. Supported TDO/TDI Voltage Combinations (Part 2 of 2)

Device	TDI Input Buffer Power	Stratix II TDO V_{CCIO} Voltage Level in I/O Bank 4				
		V_{CCIO} = 3.3 V	V_{CCIO} = 2.5 V	V_{CCIO} = 1.8 V	V_{CCIO} = 1.5 V	V_{CCIO} = 1.2 V
Non-Stratix II	VCC = 3.3 V	✓ *(1)*	✓ *(2)*	✓ *(3)*	Level shifter required	Level shifter required
	VCC = 2.5 V	✓ *(1)*, *(4)*	✓ *(2)*	✓ *(3)*	Level shifter required	Level shifter required
	VCC = 1.8 V	✓ *(1)*, *(4)*	✓ *(2)*, *(5)*	✓	Level shifter required	Level shifter required
	VCC = 1.5 V	✓ *(1)*, *(4)*	✓ *(2)*, *(5)*	✓ *(6)*	✓	✓

Notes to Table 2–20:

(1) The TDO output buffer meets V_{OH} (MIN) = 2.4 V.
(2) The TDO output buffer meets V_{OH} (MIN) = 2.0 V.
(3) An external 250-Ω pull-up resistor is not required, but recommended if signal levels on the board are not optimal.
(4) Input buffer must be 3.3-V tolerant.
(5) Input buffer must be 2.5-V tolerant.
(6) Input buffer must be 1.8-V tolerant.

High-Speed Differential I/O with DPA Support

Stratix II devices contain dedicated circuitry for supporting differential standards at speeds up to 1 Gbps. The LVDS and HyperTransport differential I/O standards are supported in the Stratix II device. In addition, the LVPECL I/O standard is supported on input and output clock pins on the top and bottom I/O banks.

The high-speed differential I/O circuitry supports the following high speed I/O interconnect standards and applications:

- SPI-4 Phase 2 (POS-PHY Level 4)
- SFI-4
- Parallel RapidIO
- HyperTransport technology

There are four dedicated high-speed PLLs in the EP2S15 to EP2S30 devices and eight dedicated high-speed PLLs in the EP2S60 to EP2S180 devices to multiply reference clocks and drive high-speed differential SERDES channels.

Tables 2–21 through 2–26 show the number of channels that each fast PLL can clock in each of the Stratix II devices. In Tables 2–21 through 2–26 the first row for each transmitter or receiver provides the number of channels driven directly by the PLL. The second row below it shows the maximum channels a PLL can drive if cross bank channels are used from the adjacent center PLL. For example, in the 484-pin FineLine BGA EP2S15

device, PLL 1 can drive a maximum of 10 transmitter channels in I/O bank 1 or a maximum of 19 transmitter channels in I/O banks 1 and 2. The Quartus II software may also merge receiver and transmitter PLLs when a receiver is driving a transmitter. In this case, one fast PLL can drive both the maximum numbers of receiver and transmitter channels.

Table 2–21. EP2S15 Device Differential Channels *Note (1)*

Package	Transmitter/ Receiver	Total Channels	Center Fast PLLs			
			PLL 1	PLL 2	PLL 3	PLL 4
484-pin FineLine BGA	Transmitter	38 *(2)*	10	9	9	10
		(3)	19	19	19	19
	Receiver	42 *(2)*	11	10	10	11
		(3)	21	21	21	21
672-pin FineLine BGA	Transmitter	38 *(2)*	10	9	9	10
		(3)	19	19	19	19
	Receiver	42 *(2)*	11	10	10	11
		(3)	21	21	21	21

Table 2–22. EP2S30 Device Differential Channels *Note (1)*

Package	Transmitter/ Receiver	Total Channels	Center Fast PLLs			
			PLL 1	PLL 2	PLL 3	PLL 4
484-pin FineLine BGA	Transmitter	38 *(2)*	10	9	9	10
		(3)	19	19	19	19
	Receiver	42 *(2)*	11	10	10	11
		(3)	21	21	21	21
672-pin FineLine BGA	Transmitter	58 *(2)*	16	13	13	16
		(3)	29	29	29	29
	Receiver	62 *(2)*	17	14	14	17
		(3)	31	31	31	31

Table 2–23. EP2S60 Differential Channels *Note (1)*

Package	Transmitter/ Receiver	Total Channels	Center Fast PLLs				Corner Fast PLLs *(4)*			
			PLL 1	PLL 2	PLL 3	PLL 4	PLL 7	PLL 8	PLL 9	PLL 10
484-pin FineLine BGA	Transmitter	38 *(2)*	10	9	9	10	10	9	9	10
		(3)	19	19	19	19	-	-	-	-
	Receiver	42 *(2)*	11	10	10	11	11	10	10	11
		(3)	21	21	21	21	-	-	-	-
672-pin FineLine BGA	Transmitter	58 *(2)*	16	13	13	16	16	13	13	16
		(3)	29	29	29	29	-	-	-	-
	Receiver	62 *(2)*	17	14	14	17	17	14	14	17
		(3)	31	31	31	31	-	-	-	-
1,020-pin FineLine BGA	Transmitter	84 *(2)*	21	21	21	21	21	21	21	21
		(3)	42	42	42	42	-	-	-	-
	Receiver	84 *(2)*	21	21	21	21	21	21	21	21
		(3)	42	42	42	42	-	-	-	-

Table 2–24. EP2S90 Differential Channels *Note (1)*

Package	Transmitter/ Receiver	Total Channels	Center Fast PLLs				Corner Fast PLLs *(4)*			
			PLL 1	PLL 2	PLL 3	PLL 4	PLL 7	PLL 8	PLL 9	PLL 10
484-pin Hybrid FineLine BGA	Transmitter	38 *(2)*	10	9	9	10	-	-	-	-
		(3)	19	19	19	19	-	-	-	-
	Receiver	42 *(2)*	11	10	10	11	-	-	-	-
		(3)	21	21	21	21	-	-	-	-
780-pin FineLine BGA	Transmitter	64 *(2)*	16	16	16	16	-	-	-	
		(3)	32	32	32	32	-	-	-	-
	Receiver	68 *(2)*	17	17	17	17	-	-	-	-
		(3)	34	34	34	34	-	-	-	
1,020-pin FineLine BGA	Transmitter	90 *(2)*	23	22	22	23	23	22	22	23
		(3)	45	45	45	45	-	-	-	-
	Receiver	94 *(2)*	23	24	24	23	23	24	24	23
		(3)	46	46	46	46	-	-	-	-
1,508-pin FineLine BGA	Transmitter	118 *(2)*	30	29	29	30	30	29	29	30
		(3)	59	59	59	59	-	-	-	-
	Receiver	118 *(2)*	30	29	29	30	30	29	29	30
		(3)	59	59	59	59	-	-	-	-

Table 2–25. EP2S130 Differential Channels *Note (1)*

Package	Transmitter/ Receiver	Total Channels	Center Fast PLLs				Corner Fast PLLs *(4)*			
			PLL 1	PLL 2	PLL 3	PLL 4	PLL 7	PLL 8	PLL 9	PLL 10
780-pin FineLine BGA	Transmitter	64 *(2)*	16	16	16	16	-	-	-	
		(3)	32	32	32	32	-	-	-	-
	Receiver	68 *(2)*	17	17	17	17	-	-	-	-
		(3)	34	34	34	34	-	-	-	
1,020-pin FineLine BGA	Transmitter	88 *(2)*	22	22	22	22	22	22	22	22
		(3)	44	44	44	44	-	-	-	-
	Receiver	92 *(2)*	23	23	23	23	23	23	23	23
		(3)	46	46	46	46	-	-	-	-
1,508-pin FineLine BGA	Transmitter	156 *(2)*	37	41	41	37	37	41	41	37
		(3)	78	78	78	78	-	-	-	-
	Receiver	156 *(2)*	37	41	41	37	37	41	41	37
		(3)	78	78	78	78	-	-	-	-

Table 2–26. EP2S180 Differential Channels *Note (1)*

Package	Transmitter/ Receiver	Total Channels	Center Fast PLLs				Corner Fast PLLs *(4)*			
			PLL 1	PLL 2	PLL 3	PLL 4	PLL 7	PLL 8	PLL 9	PLL 10
1,020-pin FineLine BGA	Transmitter	88 *(2)*	22	22	22	22	22	22	22	22
		(3)	44	44	44	44	-	-	-	-
	Receiver	92 *(2)*	23	23	23	23	23	23	23	23
		(3)	46	46	46	46	-	-	-	-
1,508-pin FineLine BGA	Transmitter	156 *(2)*	37	41	41	37	37	41	41	37
		(3)	78	78	78	78	-	-	-	-
	Receiver	156 *(2)*	37	41	41	37	37	41	41	37
		(3)	78	78	78	78	-	-	-	-

Notes to Tables 2–21 to 2–26:

(1) The total number of receiver channels includes the four non-dedicated clock channels that can be optionally used as data channels.

(2) This is the maximum number of channels the PLLs can directly drive.

(3) This is the maximum number of channels if the device uses cross bank channels from the adjacent center PLL.

(4) The channels accessible by the center fast PLL overlap with the channels accessible by the corner fast PLL. Therefore, the total number of channels is not the addition of the number of channels accessible by PLLs 1, 2, 3, and 4 with the number of channels accessible by PLLs 7, 8, 9, and 10.

Dedicated Circuitry with DPA Support

Stratix II devices support source-synchronous interfacing with LVDS or HyperTransport signaling at up to 1 Gbps. Stratix II devices can transmit or receive serial channels along with a low-speed or high-speed clock. The receiving device PLL multiplies the clock by an integer factor W = 1 through 32. For example, a HyperTransport technology application where the data rate is 1,000 Mbps and the clock rate is 500 MHz would require that W be set to 2. The SERDES factor *J* determines the parallel data width to deserialize from receivers or to serialize for transmitters. The SERDES factor *J* can be set to 4, 5, 6, 7, 8, 9, or 10 and does not have to equal the PLL clock-multiplication W value. A design using the dynamic phase aligner also supports all of these *J* factor values. For a *J* factor of 1, the Stratix II device bypasses the SERDES block. For a *J* factor of 2, the Stratix II device bypasses the SERDES block, and the DDR input and output registers are used in the IOE. Figure 2–58 shows the block diagram of the Stratix II transmitter channel.

Figure 2–58. Stratix II Transmitter Channel

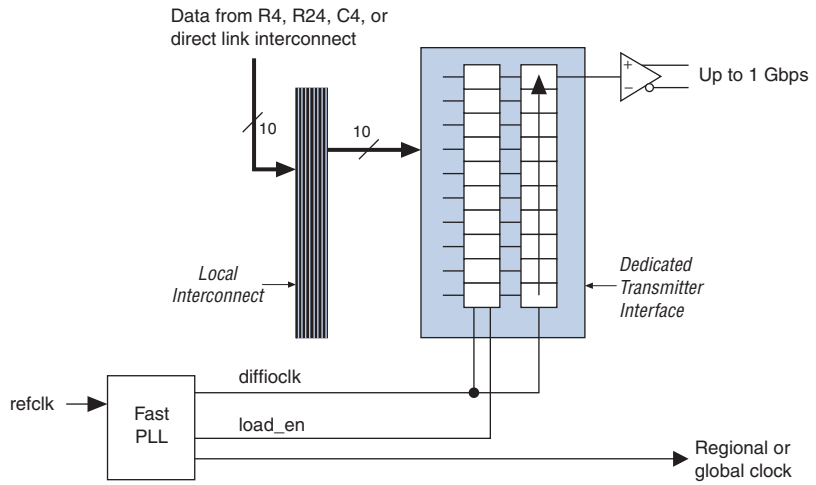

Each Stratix II receiver channel features a DPA block for phase detection and selection, a SERDES, a synchronizer, and a data realigner circuit. You can bypass the dynamic phase aligner without affecting the basic source-synchronous operation of the channel. In addition, you can dynamically switch between using the DPA block or bypassing the block via a control signal from the logic array. Figure 2–59 shows the block diagram of the Stratix II receiver channel.

Figure 2–59. Stratix II Receiver Channel

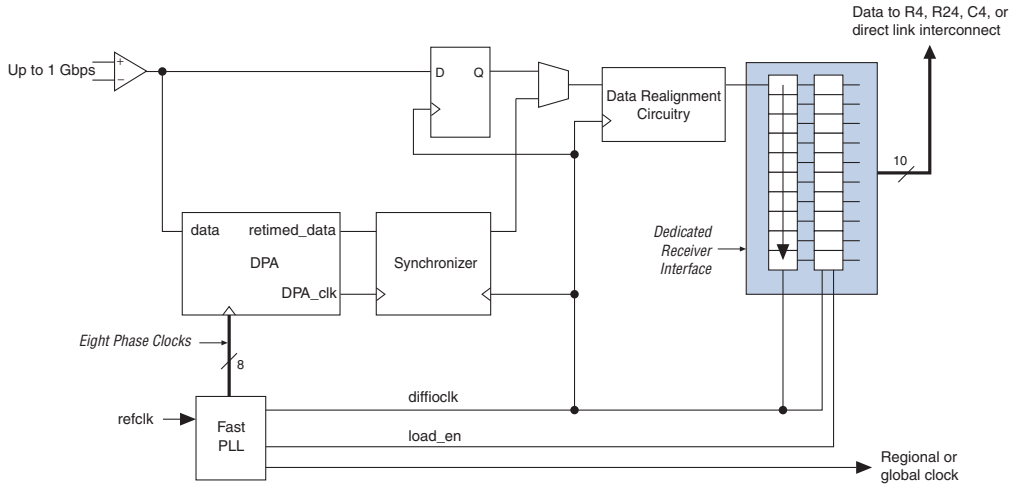

An external pin or global or regional clock can drive the fast PLLs, which can output up to three clocks: two multiplied high-speed clocks to drive the SERDES block and/or external pin, and a low-speed clock to drive the logic array. In addition, eight phase-shifted clocks from the VCO can feed to the DPA circuitry.

For more information on the fast PLL, see the *PLLs in Stratix II & Stratix II GX Devices* chapter in volume 2 of the *Stratix II Device Handbook* or the *Stratix II GX Device Handbook*.

The eight phase-shifted clocks from the fast PLL feed to the DPA block. The DPA block selects the closest phase to the center of the serial data eye to sample the incoming data. This allows the source-synchronous circuitry to capture incoming data correctly regardless of the channel-to-channel or clock-to-channel skew. The DPA block locks to a phase closest to the serial data phase. The phase-aligned DPA clock is used to write the data into the synchronizer.

The synchronizer sits between the DPA block and the data realignment and SERDES circuitry. Since every channel utilizing the DPA block can have a different phase selected to sample the data, the synchronizer is needed to synchronize the data to the high-speed clock domain of the data realignment and the SERDES circuitry.

For high-speed source synchronous interfaces such as POS-PHY 4, Parallel RapidIO, and HyperTransport, the source synchronous clock rate is not a byte- or SERDES-rate multiple of the data rate. Byte alignment is necessary for these protocols since the source synchronous clock does not provide a byte or word boundary since the clock is one half the data rate, not one eighth. The Stratix II device's high-speed differential I/O circuitry provides dedicated data realignment circuitry for user-controlled byte boundary shifting. This simplifies designs while saving ALM resources. You can use an ALM-based state machine to signal the shift of receiver byte boundaries until a specified pattern is detected to indicate byte alignment.

Fast PLL & Channel Layout

The receiver and transmitter channels are interleaved such that each I/O bank on the left and right side of the device has one receiver channel and one transmitter channel per LAB row. Figure 2–60 shows the fast PLL and channel layout in the EP2S15 and EP2S30 devices. Figure 2–61 shows the fast PLL and channel layout in the EP2S60 to EP2S180 devices.

Figure 2–60. Fast PLL & Channel Layout in the EP2S15 & EP2S30 Devices *Note (1)*

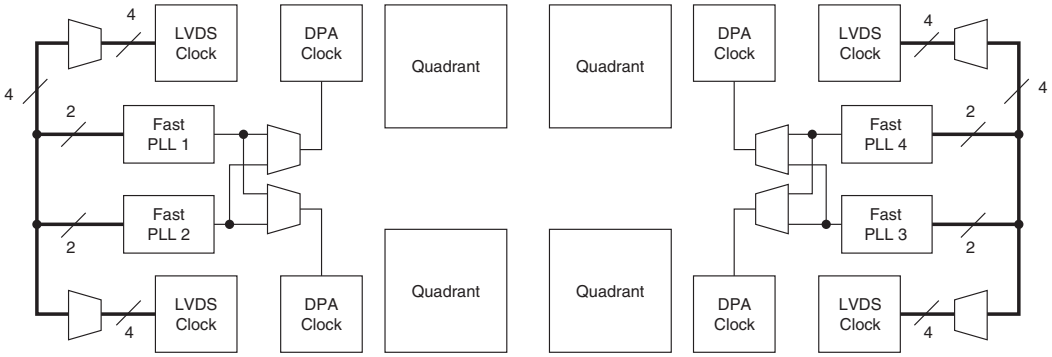

Note to Figure 2–60:
(1) See Table 2–21 for the number of channels each device supports.

Figure 2–61. Fast PLL & Channel Layout in the EP2S60 to EP2S180 Devices *Note (1)*

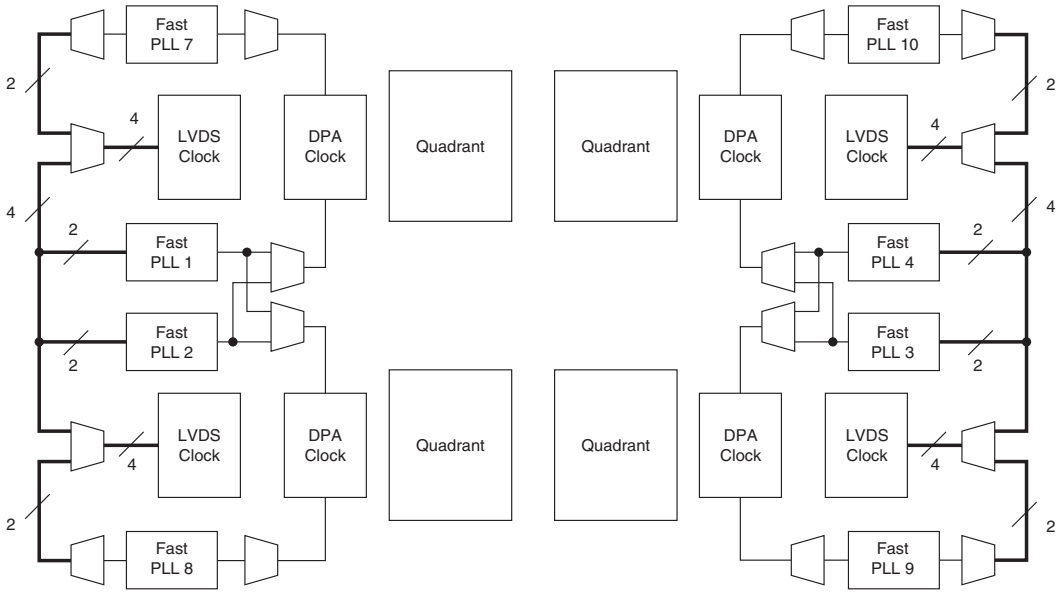

Note to Figure 2–61:

(1) See Tables 2–22 through 2–26 for the number of channels each device supports.

Document Revision History

Table 2–27 shows the revision history for this chapter.

Table 2–27. Document Revision History (Part 1 of 2)

Date and Document Version	Changes Made	Summary of Changes
May 2007, v4.3	Updated "Clock Control Block" section.	—
	Updated note in the "Clock Control Block" section.	—
	Deleted Tables 2-11 and 2-12.	—
	Updated notes to: • Figure 2–41 • Figure 2–42 • Figure 2–43 • Figure 2–45	—
	Updated notes to Table 2–18.	—
	Moved Document Revision History to end of the chapter.	—
August 2006, v4.2	Updated Table 2–18 with note.	—
April 2006, v4.1	• Updated Table 2–13. • Removed Note 2 from Table 2–16. • Updated "On-Chip Termination" section and Table 2–19 to include parallel termination with calibration information. • Added new "On-Chip Parallel Termination with Calibration" section. • Updated Figure 2–44.	• Added parallel on-chip termination description and specification. • Changed RCLK names to match the Quartus II software in Table 2–13.
December 2005, v4.0	Updated "Clock Control Block" section.	—
July 2005, v3.1	• Updated HyperTransport technology information in Table 2–18. • Updated HyperTransport technology information in Figure 2–57. • Added information on the asynchronous clear signal.	—
May 2005, v3.0	• Updated "Functional Description" section. • Updated Table 2–3. • Updated "Clock Control Block" section. • Updated Tables 2–17 through 2–19. • Updated Tables 2–20 through 2–22. • Updated Figure 2–57.	—
March 2005, 2.1	• Updated "Functional Description" section. • Updated Table 2–3.	—

Table 2–27. Document Revision History (Part 2 of 2)

Date and Document Version	Changes Made	Summary of Changes
January 2005, v2.0	• Updated the “MultiVolt I/O Interface” and “TriMatrix Memory” sections. • Updated Tables 2–3, 2–17, and 2–19.	—
October 2004, v1.2	• Updated Tables 2–9, 2–16, 2–26, and 2–27.	—
July 2004, v1.1	• Updated note to Tables 2–9 and 2–16. • Updated Tables 2–16, 2–17, 2–18, 2–19, and 2–20. • Updated Figures 2–41, 2–42, and 2–57. • Removed 3 from list of SERDES factor *J*. • Updated “High-Speed Differential I/O with DPA Support” section. • In “Dedicated Circuitry with DPA Support” section, removed XSBI and changed RapidIO to Parallel RapidIO.	—
February 2004, v1.0	Added document to the Stratix II Device Handbook.	—

3. Configuration & Testing

SII51003-4.2

IEEE Std. 1149.1 JTAG Boundary-Scan Support

All Stratix® II devices provide Joint Test Action Group (JTAG) boundary-scan test (BST) circuitry that complies with the IEEE Std. 1149.1. JTAG boundary-scan testing can be performed either before or after, but not during configuration. Stratix II devices can also use the JTAG port for configuration with the Quartus® II software or hardware using either Jam Files (**.jam**) or Jam Byte-Code Files (**.jbc**).

Stratix II devices support IOE I/O standard setting reconfiguration through the JTAG BST chain. The JTAG chain can update the I/O standard for all input and output pins any time before or during user mode through the `CONFIG_IO` instruction. You can use this capability for JTAG testing before configuration when some of the Stratix II pins drive or receive from other devices on the board using voltage-referenced standards. Because the Stratix II device may not be configured before JTAG testing, the I/O pins may not be configured for appropriate electrical standards for chip-to-chip communication. Programming those I/O standards via JTAG allows you to fully test I/O connections to other devices.

A device operating in JTAG mode uses four required pins, `TDI`,`TDO`, `TMS`, and `TCK`, and one optional pin, `TRST`. The `TCK` pin has an internal weak pull-down resistor, while the `TDI`,`TMS` and `TRST` pins have weak internal pull-ups. The JTAG input pins are powered by the 3.3-V `VCCPD` pins. The TDO output pin is powered by the V_{CCIO} power supply of bank 4.

Stratix II devices also use the JTAG port to monitor the logic operation of the device with the SignalTap® II embedded logic analyzer. Stratix II devices support the JTAG instructions shown in Table 3–1.

Stratix II, Stratix, Cyclone® II, and Cyclone devices must be within the first 17 devices in a JTAG chain. All of these devices have the same JTAG controller. If any of the Stratix II, Stratix, Cyclone II, or Cyclone devices are in the 18th of further position, they fail configuration. This does not affect SignalTap II.

The Stratix II device instruction register length is 10 bits and the `USERCODE` register length is 32 bits. Tables 3–2 and 3–3 show the boundary-scan register length and device `IDCODE` information for Stratix II devices.

Table 3–1. Stratix II JTAG Instructions

JTAG Instruction	Instruction Code	Description
SAMPLE/PRELOAD	00 0000 0101	Allows a snapshot of signals at the device pins to be captured and examined during normal device operation, and permits an initial data pattern to be output at the device pins. Also used by the SignalTap II embedded logic analyzer.
EXTEST *(1)*	00 0000 1111	Allows the external circuitry and board-level interconnects to be tested by forcing a test pattern at the output pins and capturing test results at the input pins.
BYPASS	11 1111 1111	Places the 1-bit bypass register between the TDI and TDO pins, which allows the BST data to pass synchronously through selected devices to adjacent devices during normal device operation.
USERCODE	00 0000 0111	Selects the 32-bit USERCODE register and places it between the TDI and TDO pins, allowing the USERCODE to be serially shifted out of TDO.
IDCODE	00 0000 0110	Selects the IDCODE register and places it between TDI and TDO, allowing the IDCODE to be serially shifted out of TDO.
HIGHZ *(1)*	00 0000 1011	Places the 1-bit bypass register between the TDI and TDO pins, which allows the BST data to pass synchronously through selected devices to adjacent devices during normal device operation, while tri-stating all of the I/O pins.
CLAMP *(1)*	00 0000 1010	Places the 1-bit bypass register between the TDI and TDO pins, which allows the BST data to pass synchronously through selected devices to adjacent devices during normal device operation while holding I/O pins to a state defined by the data in the boundary-scan register.
ICR instructions		Used when configuring a Stratix II device via the JTAG port with a USB Blaster, MasterBlaster™, ByteBlasterMV™, or ByteBlaster II download cable, or when using a **.jam** or **.jbc** via an embedded processor or JRunner.
PULSE_NCONFIG	00 0000 0001	Emulates pulsing the nCONFIG pin low to trigger reconfiguration even though the physical pin is unaffected.
CONFIG_IO *(2)*	00 0000 1101	Allows configuration of I/O standards through the JTAG chain for JTAG testing. Can be executed before, during, or after configuration. Stops configuration if executed during configuration. Once issued, the CONFIG_IO instruction holds nSTATUS low to reset the configuration device. nSTATUS is held low until the IOE configuration register is loaded and the TAP controller state machine transitions to the UPDATE_DR state.
SignalTap II instructions		Monitors internal device operation with the SignalTap II embedded logic analyzer.

Notes to Table 3–1:

(1) Bus hold and weak pull-up resistor features override the high-impedance state of HIGHZ, CLAMP, and EXTEST.

(2) For more information on using the CONFIG_IO instruction, see the *MorphIO: An I/O Reconfiguration Solution for Altera Devices White Paper*.

The Quartus II software has an Auto Usercode feature where you can choose to use the checksum value of a programming file as the JTAG user code. If selected, the checksum is automatically loaded to the `USERCODE` register. Turn on the **Auto Usercode** option by clicking **Device & Pin Options**, then **General,** in the **Settings** dialog box (Assignments menu).

Table 3–2. Stratix II Boundary-Scan Register Length

Device	Boundary-Scan Register Length
EP2S15	1,140
EP2S30	1,692
EP2S60	2,196
EP2S90	2,748
EP2S130	3,420
EP2S180	3,948

Table 3–3. 32-Bit Stratix II Device IDCODE

Device	IDCODE (32 Bits) *(1)*			
	Version (4 Bits)	Part Number (16 Bits)	Manufacturer Identity (11 Bits)	LSB (1 Bit) *(2)*
EP2S15	0000	0010 0000 1001 0001	000 0110 1110	1
EP2S30	0000	0010 0000 1001 0010	000 0110 1110	1
EP2S60	0001	0010 0000 1001 0011	000 0110 1110	1
EP2S90	0000	0010 0000 1001 0100	000 0110 1110	1
EP2S130	0000	0010 0000 1001 0101	000 0110 1110	1
EP2S180	0000	0010 0000 1001 0110	000 0110 1110	1

Notes to Table 3–3:

(1) The most significant bit (MSB) is on the left.

(2) The `IDCODE's` least significant bit (LSB) is always 1.

Stratix, Stratix II, Cyclone, and Cyclone II devices must be within the first 17 devices in a JTAG chain. All of these devices have the same JTAG controller. If any of the Stratix, Stratix II, Cyclone, and Cyclone II devices are in the 18th or after they fail configuration. This does not affect SignalTap II.

For more information on JTAG, see the following documents:

- The *IEEE Std. 1149.1 (JTAG) Boundary-Scan Testing for Stratix II & Stratix II GX Devices* chapter of the *Stratix II Device Handbook, Volume 2* or the *Stratix II GX Device Handbook, Volume 2*
- Jam Programming & Test Language Specification

SignalTap II Embedded Logic Analyzer

Stratix II devices feature the SignalTap II embedded logic analyzer, which monitors design operation over a period of time through the IEEE Std. 1149.1 (JTAG) circuitry. You can analyze internal logic at speed without bringing internal signals to the I/O pins. This feature is particularly important for advanced packages, such as FineLine BGA® packages, because it can be difficult to add a connection to a pin during the debugging process after a board is designed and manufactured.

Configuration

The logic, circuitry, and interconnects in the Stratix II architecture are configured with CMOS SRAM elements. Altera® FPGA devices are reconfigurable and every device is tested with a high coverage production test program so you do not have to perform fault testing and can instead focus on simulation and design verification.

Stratix II devices are configured at system power-up with data stored in an Altera configuration device or provided by an external controller (e.g., a MAX® II device or microprocessor). Stratix II devices can be configured using the fast passive parallel (FPP), active serial (AS), passive serial (PS), passive parallel asynchronous (PPA), and JTAG configuration schemes. The Stratix II device's optimized interface allows microprocessors to configure it serially or in parallel, and synchronously or asynchronously. The interface also enables microprocessors to treat Stratix II devices as memory and configure them by writing to a virtual memory location, making reconfiguration easy.

In addition to the number of configuration methods supported, Stratix II devices also offer the design security, decompression, and remote system upgrade features. The design security feature, using configuration bitstream encryption and AES technology, provides a mechanism to protect your designs. The decompression feature allows Stratix II FPGAs to receive a compressed configuration bitstream and decompress this data in real-time, reducing storage requirements and configuration time. The remote system upgrade feature allows real-time system upgrades from remote locations of your Stratix II designs. For more information, see "Configuration Schemes" on page 3–7.

Operating Modes

The Stratix II architecture uses SRAM configuration elements that require configuration data to be loaded each time the circuit powers up. The process of physically loading the SRAM data into the device is called configuration. During initialization, which occurs immediately after configuration, the device resets registers, enables I/O pins, and begins to operate as a logic device. The I/O pins are tri-stated during power-up, and before and during configuration. Together, the configuration and initialization processes are called command mode. Normal device operation is called user mode.

SRAM configuration elements allow Stratix II devices to be reconfigured in-circuit by loading new configuration data into the device. With real-time reconfiguration, the device is forced into command mode with a device pin. The configuration process loads different configuration data, reinitializes the device, and resumes user-mode operation. You can perform in-field upgrades by distributing new configuration files either within the system or remotely.

`PORSEL` is a dedicated input pin used to select POR delay times of 12 ms or 100 ms during power-up. When the `PORSEL` pin is connected to ground, the POR time is 100 ms; when the `PORSEL` pin is connected to V_{CC}, the POR time is 12 ms.

The `nIO PULLUP` pin is a dedicated input that chooses whether the internal pull-ups on the user I/O pins and dual-purpose configuration I/O pins (`nCSO`, `ASDO`, `DATA[7..0]`, `nWS`, `nRS`, `RDYnBSY`, `nCS`, `CS`, `RUnLU`, `PGM[2..0]`, `CLKUSR`, `INIT_DONE`, `DEV_OE`, `DEV_CLR`) are on or off before and during configuration. A logic high (1.5, 1.8, 2.5, 3.3 V) turns off the weak internal pull-ups, while a logic low turns them on.

Stratix II devices also offer a new power supply, V_{CCPD}, which must be connected to 3.3 V in order to power the 3.3-V/2.5-V buffer available on the configuration input pins and JTAG pins. V_{CCPD} applies to all the JTAG input pins (`TCK`, `TMS`, `TDI`, and `TRST`) and the configuration input pins when `VCCSEL` is connected to ground. See Table 3–4 for more information on the pins affected by `VCCSEL`.

The `VCCSEL` pin allows the V_{CCIO} setting (of the banks where the configuration inputs reside) to be independent of the voltage required by the configuration inputs. Therefore, when selecting the V_{CCIO}, the V_{IL} and V_{IH} levels driven to the configuration inputs do not have to be a concern.

The PLL_ENA pin and the configuration input pins (Table 3–4) have a dual buffer design: a 3.3-V/2.5-V input buffer and a 1.8-V/1.5-V input buffer. The VCCSEL input pin selects which input buffer is used. The 3.3-V/2.5-V input buffer is powered by $V_{CCPD,}$ while the 1.8-V/1.5-V input buffer is powered by V_{CCIO}. Table 3–4 shows the pins affected by VCCSEL.

Table 3–4. Pins Affected by the Voltage Level at VCCSEL

Pin	VCCSEL = LOW (connected to GND)	VCCSEL = HIGH (connected to V_{CCPD})
nSTATUS (when used as an input)	3.3/2.5-V input buffer is selected. Input buffer is powered by V_{CCPD}.	1.8/1.5-V input buffer is selected. Input buffer is powered by V_{CCIO} of the I/O bank.
nCONFIG		
CONF_DONE (when used as an input)		
DATA[7..0]		
nCE		
DCLK (when used as an input)		
CS		
nWS		
nRS		
nCS		
CLKUSR		
DEV_OE		
DEV_CLRn		
RUnLU		
PLL_ENA		

VCCSEL is sampled during power-up. Therefore, the VCCSEL setting cannot change on the fly or during a reconfiguration. The VCCSEL input buffer is powered by V_{CCINT} and must be hardwired to V_{CCPD} or ground. A logic high VCCSEL connection selects the 1.8-V/1.5-V input buffer, and a logic low selects the 3.3-V/2.5-V input buffer. VCCSEL should be set to comply with the logic levels driven out of the configuration device or MAX® II/microprocessor.

If you need to support configuration input voltages of 3.3 V/2.5 V, you should set the VCCSEL to a logic low; you can set the V_{CCIO} of the I/O bank that contains the configuration inputs to any supported voltage. If

you need to support configuration input voltages of 1.8 V/1.5 V, you should set the VCCSEL to a logic high and the V_{CCIO} of the bank that contains the configuration inputs to 1.8 V/1.5 V.

For more information on multi-volt support, including information on using TDO and nCEO in multi-volt systems, refer to the *Stratix II Architecture* chapter in volume 1 of the *Stratix II Device Handbook*.

Configuration Schemes

You can load the configuration data for a Stratix II device with one of five configuration schemes (see Table 3–5), chosen on the basis of the target application. You can use a configuration device, intelligent controller, or the JTAG port to configure a Stratix II device. A configuration device can automatically configure a Stratix II device at system power-up.

You can configure multiple Stratix II devices in any of the five configuration schemes by connecting the configuration enable (nCE) and configuration enable output (nCEO) pins on each device.

Stratix II FPGAs offer the following:

- Configuration data decompression to reduce configuration file storage
- Design security using configuration data encryption to protect your designs
- Remote system upgrades for remotely updating your Stratix II designs

Table 3–5 summarizes which configuration features can be used in each configuration scheme.

Table 3–5. Stratix II Configuration Features (Part 1 of 2)

Configuration Scheme	Configuration Method	Design Security	Decompression	Remote System Upgrade
FPP	MAX II device or microprocessor and flash device	✓ *(1)*	✓ *(1)*	✓
	Enhanced configuration device		✓ *(2)*	✓
AS	Serial configuration device	✓	✓	✓ *(3)*
PS	MAX II device or microprocessor and flash device	✓	✓	✓
	Enhanced configuration device	✓	✓	✓
	Download cable *(4)*	✓	✓	

Table 3–5. Stratix II Configuration Features (Part 2 of 2)

Configuration Scheme	Configuration Method	Design Security	Decompression	Remote System Upgrade
PPA	MAX II device or microprocessor and flash device			✓
JTAG	Download cable *(4)*			
	MAX II device or microprocessor and flash device			

Notes for Table 3–5:

(1) In these modes, the host system must send a `DCLK` that is 4× the data rate.

(2) The enhanced configuration device decompression feature is available, while the Stratix II decompression feature is not available.

(3) Only remote update mode is supported when using the AS configuration scheme. Local update mode is not supported.

(4) The supported download cables include the Altera USB Blaster universal serial bus (USB) port download cable, MasterBlaster serial/USB communications cable, ByteBlaster II parallel port download cable, and the ByteBlasterMV parallel port download cable.

See the *Configuring Stratix II & Stratix II GX Devices* chapter in volume 2 of the *Stratix II Device Handbook* or the *Stratix II GX Device Handbook* for more information about configuration schemes in Stratix II and Stratix II GX devices.

Device Security Using Configuration Bitstream Encryption

Stratix II FPGAs are the industry's first FPGAs with the ability to decrypt a configuration bitstream using the Advanced Encryption Standard (AES) algorithm. When using the design security feature, a 128-bit security key is stored in the Stratix II FPGA. To successfully configure a Stratix II FPGA that has the design security feature enabled, it must be configured with a configuration file that was encrypted using the same 128-bit security key. The security key can be stored in non-volatile memory inside the Stratix II device. This non-volatile memory does not require any external devices, such as a battery back-up, for storage.

An encryption configuration file is the same size as a non-encryption configuration file. When using a serial configuration scheme such as passive serial (PS) or active serial (AS), configuration time is the same whether or not the design security feature is enabled. If the fast passive parallel (FPP) scheme us used with the design security or decompression feature, a 4× DCLK is required. This results in a slower configuration time when compared to the configuration time of an FPGA that has neither the design security, nor decompression feature enabled. For more information about this feature, refer to *AN 341: Using the Design Security Feature in Stratix II Devices*. Contact your local Altera sales representative to request this document.

Device Configuration Data Decompression

Stratix II FPGAs support decompression of configuration data, which saves configuration memory space and time. This feature allows you to store compressed configuration data in configuration devices or other memory, and transmit this compressed bit stream to Stratix II FPGAs. During configuration, the Stratix II FPGA decompresses the bit stream in real time and programs its SRAM cells.

Stratix II FPGAs support decompression in the FPP (when using a MAX II device/microprocessor and flash memory), AS and PS configuration schemes. Decompression is not supported in the PPA configuration scheme nor in JTAG-based configuration.

Remote System Upgrades

Shortened design cycles, evolving standards, and system deployments in remote locations are difficult challenges faced by modern system designers. Stratix II devices can help effectively deal with these challenges with their inherent re-programmability and dedicated circuitry to perform remote system updates. Remote system updates help deliver feature enhancements and bug fixes without costly recalls, reduce time to market, and extend product life.

Stratix II FPGAs feature dedicated remote system upgrade circuitry to facilitate remote system updates. Soft logic (Nios® processor or user logic) implemented in the Stratix II device can download a new configuration image from a remote location, store it in configuration memory, and direct the dedicated remote system upgrade circuitry to initiate a reconfiguration cycle. The dedicated circuitry performs error detection during and after the configuration process, recovers from any error condition by reverting back to a safe configuration image, and provides

error status information. This dedicated remote system upgrade circuitry avoids system downtime and is the critical component for successful remote system upgrades.

RSC is supported in the following Stratix II configuration schemes: FPP, AS, PS, and PPA. RSC can also be implemented in conjunction with advanced Stratix II features such as real-time decompression of configuration data and design security using AES for secure and efficient field upgrades.

See the *Remote System Upgrades With Stratix II & Stratix II GX Devices* chapter in volume 2 of the *Stratix II Device Handbook* or the *Stratix II GX Device Handbook* for more information about remote configuration in Stratix II devices.

Configuring Stratix II FPGAs with JRunner

JRunner is a software driver that configures Altera FPGAs, including Stratix II FPGAs, through the ByteBlaster II or ByteBlasterMV cables in JTAG mode. The programming input file supported is in Raw Binary File **(.rbf)** format. JRunner also requires a Chain Description File **(.cdf)** generated by the Quartus II software. JRunner is targeted for embedded JTAG configuration. The source code is developed for the Windows NT operating system (OS), but can be customized to run on other platforms.

For more information on the JRunner software driver, see the *JRunner Software Driver: An Embedded Solution to the JTAG Configuration White Paper* and the source files on the Altera web site **(www.altera.com)**.

Programming Serial Configuration Devices with SRunner

A serial configuration device can be programmed in-system by an external microprocessor using SRunner. SRunner is a software driver developed for embedded serial configuration device programming that can be easily customized to fit in different embedded systems. SRunner is able to read a **.rpd** file (Raw Programming Data) and write to the serial configuration devices. The serial configuration device programming time using SRunner is comparable to the programming time when using the Quartus II software.

For more information about SRunner, see the *SRunner: An Embedded Solution for EPCS Programming* White Paper and the source code on the Altera web site at **www.altera.com**.

For more information on programming serial configuration devices, see the Serial Configuration Devices (EPCS1 & EPCS4) Data Sheet in the *Configuration Handbook.*

Configuring Stratix II FPGAs with the MicroBlaster Driver

The MicroBlaster™ software driver supports an RBF programming input file and is ideal for embedded FPP or PS configuration. The source code is developed for the Windows NT operating system, although it can be customized to run on other operating systems. For more information on the MicroBlaster software driver, see the *Configuring the MicroBlaster Fast Passive Parallel Software Driver White Paper* or the *Configuring the MicroBlaster Passive Serial Software Driver White Paper* on the Altera web site (**www.altera.com**).

PLL Reconfiguration

The phase-locked loops (PLLs) in the Stratix II device family support reconfiguration of their multiply, divide, VCO-phase selection, and bandwidth selection settings without reconfiguring the entire device. You can use either serial data from the logic array or regular I/O pins to program the PLL's counter settings in a serial chain. This option provides considerable flexibility for frequency synthesis, allowing real-time variation of the PLL frequency and delay. The rest of the device is functional while reconfiguring the PLL.

See the *PLLs in Stratix II & Stratix II GX Devices* chapter in volume 2 of the *Stratix II Device Handbook* or the *Stratix II GX Device Handbook* for more information on Stratix II PLLs.

Temperature Sensing Diode (TSD)

Stratix II devices include a diode-connected transistor for use as a temperature sensor in power management. This diode is used with an external digital thermometer device. These devices steer bias current through the Stratix II diode, measuring forward voltage and converting this reading to temperature in the form of an 8-bit signed number (7 bits plus sign). The external device's output represents the junction temperature of the Stratix II device and can be used for intelligent power management.

The diode requires two pins (`tempdiodep` and `tempdioden`) on the Stratix II device to connect to the external temperature-sensing device, as shown in Figure 3–1. The temperature sensing diode is a passive element and therefore can be used before the Stratix II device is powered.

Figure 3–1. External Temperature-Sensing Diode

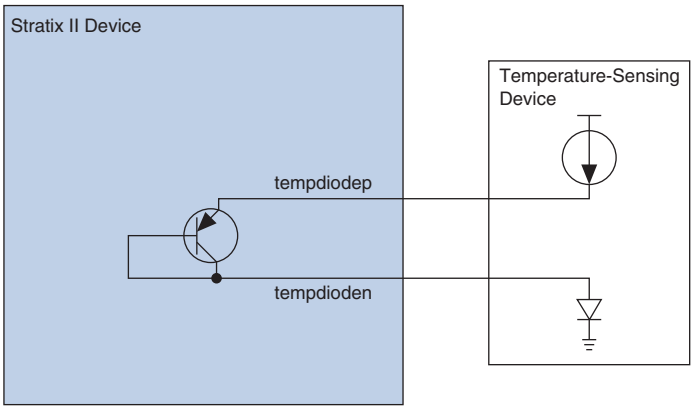

Table 3–6 shows the specifications for bias voltage and current of the Stratix II temperature sensing diode.

Table 3–6. Temperature-Sensing Diode Electrical Characteristics

Parameter	Minimum	Typical	Maximum	Unit
IBIAS high	80	100	120	µA
IBIAS low	8	10	12	µA
VBP - VBN	0.3		0.9	V
VBN		0.7		V
Series resistance			3	Ω

The temperature-sensing diode works for the entire operating range, as shown in Figure 3–2.

Figure 3–2. Temperature vs. Temperature-Sensing Diode Voltage

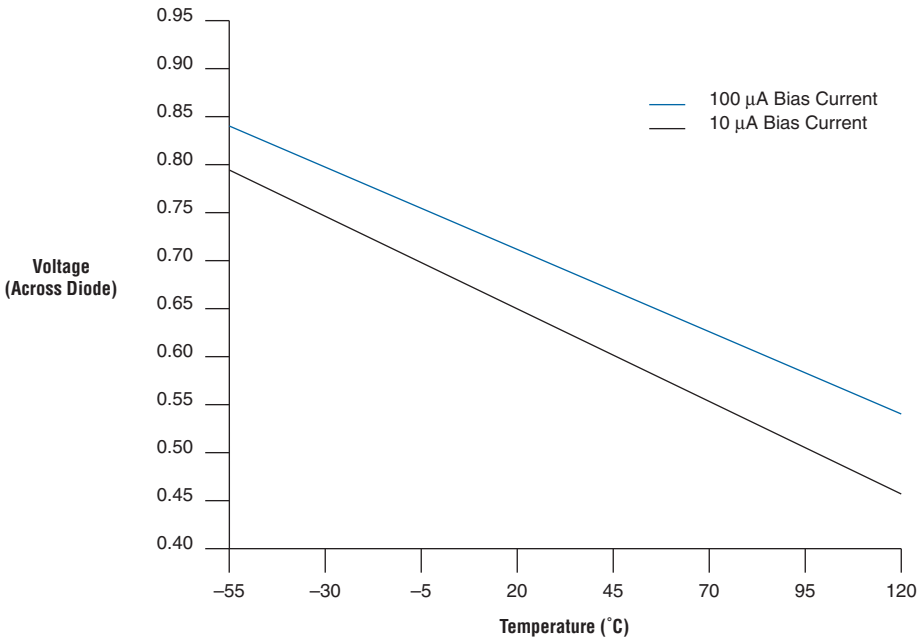

The temperature sensing diode is a very sensitive circuit which can be influenced by noise coupled from other traces on the board, and possibly within the device package itself, depending on device usage. The interfacing device registers temperature based on milivolts of difference as seen at the TSD. Switching I/O near the TSD pins can affect the temperature reading. Altera recommends you take temperature readings during periods of no activity in the device (for example, standby mode where no clocks are toggling in the device), such as when the nearby I/Os are at a DC state, and disable clock networks in the device.

Automated Single Event Upset (SEU) Detection

Stratix II devices offer on-chip circuitry for automated checking of single event upset (SEU) detection. Some applications that require the device to operate error free at high elevations or in close proximity to Earth's North or South Pole require periodic checks to ensure continued data integrity. The error detection cyclic redundancy check (CRC) feature controlled by

the Device & Pin Options dialog box in the Quartus II software uses a 32-bit CRC circuit to ensure data reliability and is one of the best options for mitigating SEU.

You can implement the error detection CRC feature with existing circuitry in Stratix II devices, eliminating the need for external logic. For Stratix II devices, CRC is computed by the device during configuration and checked against an automatically computed CRC during normal operation. The `CRC_ERROR` pin reports a soft error when configuration SRAM data is corrupted, triggering device reconfiguration.

Custom-Built Circuitry

Dedicated circuitry is built in the Stratix II devices to perform error detection automatically. This error detection circuitry in Stratix II devices constantly checks for errors in the configuration SRAM cells while the device is in user mode. You can monitor one external pin for the error and use it to trigger a re-configuration cycle. You can select the desired time between checks by adjusting a built-in clock divider.

Software Interface

In the Quartus II software version 4.1 and later, you can turn on the automated error detection CRC feature in the Device & Pin Options dialog box. This dialog box allows you to enable the feature and set the internal frequency of the CRC between 400 kHz to 50 MHz. This controls the rate that the CRC circuitry verifies the internal configuration SRAM bits in the FPGA device.

For more information on CRC, refer to *AN 357: Error Detection Using CRC in Altera FPGA Devices*.

Document Revision History

Table 3–7 shows the revision history for this chapter.

Table 3–7. Document Revision History (Part 1 of 2)

Date and Document Version	Changes Made	Summary of Changes
May 2007, v4.2	Moved Document Revision History section to the end of the chapter.	—
	Updated the "Temperature Sensing Diode (TSD)" section.	—

Table 3–7. Document Revision History (Part 2 of 2)

Date and Document Version	Changes Made	Summary of Changes
April 2006, v4.1	Updated “Device Security Using Configuration Bitstream Encryption” section.	—
December 2005, v4.0	Updated “Software Interface” section.	—
May 2005, v3.0	• Updated “IEEE Std. 1149.1 JTAG Boundary-Scan Support” section. • Updated “Operating Modes” section.	—
January 2005, v2.1	Updated JTAG chain device limits.	—
January 2005, v2.0	Updated Table 3–3.	—
July 2004, v1.1	• Added “Automated Single Event Upset (SEU) Detection” section. • Updated “Device Security Using Configuration Bitstream Encryption” section. • Updated Figure 3–2.	—
February 2004, v1.0	Added document to the Stratix II Device Handbook.	—

4. Hot Socketing & Power-On Reset

SII51004-3.2

Stratix® II devices offer hot socketing, which is also known as hot plug-in or hot swap, and power sequencing support without the use of any external devices. You can insert or remove a Stratix II board in a system during system operation without causing undesirable effects to the running system bus or the board that was inserted into the system.

The hot socketing feature also removes some of the difficulty when you use Stratix II devices on printed circuit boards (PCBs) that also contain a mixture of 5.0-, 3.3-, 2.5-, 1.8-, 1.5- and 1.2-V devices. With the Stratix II hot socketing feature, you no longer need to ensure a proper power-up sequence for each device on the board.

The Stratix II hot socketing feature provides:

- Board or device insertion and removal without external components or board manipulation
- Support for any power-up sequence
- Non-intrusive I/O buffers to system buses during hot insertion

This chapter also discusses the power-on reset (POR) circuitry in Stratix II devices. The POR circuitry keeps the devices in the reset state until the V_{CC} is within operating range.

Stratix II Hot-Socketing Specifications

Stratix II devices offer hot socketing capability with all three features listed above without any external components or special design requirements. The hot socketing feature in Stratix II devices allows:

- The device can be driven before power-up without any damage to the device itself.
- I/O pins remain tri-stated during power-up. The device does not drive out before or during power-up, thereby affecting other buses in operation.
- Signal pins do not drive the V_{CCIO}, V_{CCPD}, or V_{CCINT} power supplies. External input signals to I/O pins of the device do not internally power the V_{CCIO} or V_{CCINT} power supplies of the device via internal paths within the device.

Devices Can Be Driven Before Power-Up

You can drive signals into the I/O pins, dedicated input pins and dedicated clock pins of Stratix II devices before or during power-up or power-down without damaging the device. Stratix II devices support any power-up or power-down sequence (V_{CCIO}, V_{CCINT}, and V_{CCPD}) in order to simplify system level design.

I/O Pins Remain Tri-Stated During Power-Up

A device that does not support hot-socketing may interrupt system operation or cause contention by driving out before or during power-up. In a hot socketing situation, Stratix II device's output buffers are turned off during system power-up or power-down. Stratix II device also does not drive out until the device is configured and has attained proper operating conditions.

Signal Pins Do Not Drive the V_{CCIO}, V_{CCINT} or V_{CCPD} Power Supplies

Devices that do not support hot-socketing can short power supplies together when powered-up through the device signal pins. This irregular power-up can damage both the driving and driven devices and can disrupt card power-up.

Stratix II devices do not have a current path from I/O pins, dedicated input pins, or dedicated clock pins to the V_{CCIO}, V_{CCINT}, or V_{CCPD} pins before or during power-up. A Stratix II device may be inserted into (or removed from) a powered-up system board without damaging or interfering with system-board operation. When hot-socketing, Stratix II devices may have a minimal effect on the signal integrity of the backplane.

You can power up or power down the V_{CCIO}, V_{CCINT}, and V_{CCPD} pins in any sequence. The power supply ramp rates can range from 100 µs to 100 ms. All V_{CC} supplies must power down within 100 ms of each other to prevent I/O pins from driving out. During hot socketing, the I/O pin capacitance is less than 15 pF and the clock pin capacitance is less than 20 pF. Stratix II devices meet the following hot socketing specification.

- The hot socketing DC specification is: $| I_{IOPIN} | < 300$ µA.
- The hot socketing AC specification is: $| I_{IOPIN} | < 8$ mA for 10 ns or less.

I_{IOPIN} is the current at any user I/O pin on the device. This specification takes into account the pin capacitance, but not board trace and external loading capacitance. Additional capacitance for trace, connector, and loading needs must be considered separately. For the AC specification, the peak current duration is 10 ns or less because of power-up transients. For more information, refer to the *Hot-Socketing & Power-Sequencing Feature & Testing for Altera Devices* white paper.

A possible concern regarding hot-socketing is the potential for latch-up. Latch-up can occur when electrical subsystems are hot-socketed into an active system. During hot-socketing, the signal pins may be connected and driven by the active system before the power supply can provide current to the device's V_{CC} and ground planes. This condition can lead to latch-up and cause a low-impedance path from V_{CC} to ground within the device. As a result, the device extends a large amount of current, possibly causing electrical damage. Nevertheless, Stratix II devices are immune to latch-up when hot-socketing.

Hot Socketing Feature Implementation in Stratix II Devices

The hot socketing feature turns off the output buffer during the power-up event (either V_{CCINT}, V_{CCIO}, or V_{CCPD} supplies) or power down. The hot-socket circuit will generate an internal `HOTSCKT` signal when either V_{CCINT}, V_{CCIO}, or V_{CCPD} is below threshold voltage. The `HOTSCKT` signal will cut off the output buffer to make sure that no DC current (except for weak pull up leaking) leaks through the pin. When V_{CC} ramps up very slowly, V_{CC} is still relatively low even after the POR signal is released and the configuration is finished. The `CONF_DONE`, `nCEO`, and `nSTATUS` pins fail to respond, as the output buffer can not flip from the state set by the hot socketing circuit at this low V_{CC} voltage. Therefore, the hot socketing circuit has been removed on these configuration pins to make sure that they are able to operate during configuration. It is expected behavior for these pins to drive out during power-up and power-down sequences.

Each I/O pin has the following circuitry shown in Figure 4–1.

Figure 4–1. Hot Socketing Circuit Block Diagram for Stratix II Devices

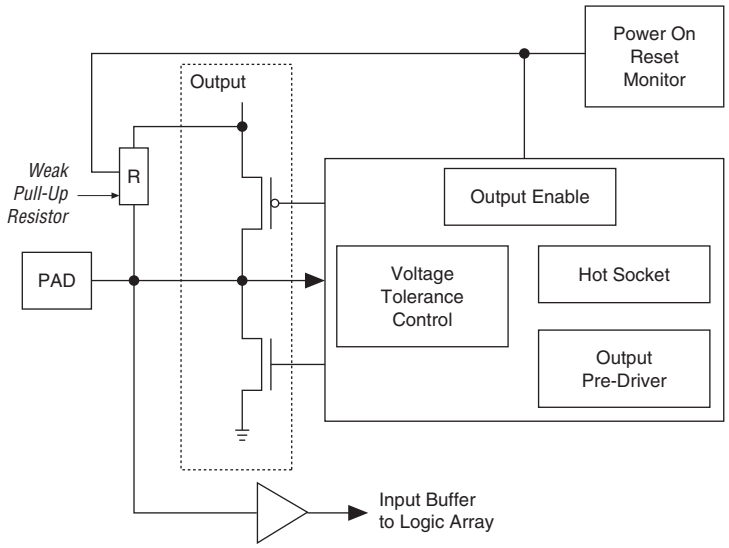

The POR circuit monitors V_{CCINT} voltage level and keeps I/O pins tri-stated until the device is in user mode. The weak pull-up resistor (R) from the I/O pin to V_{CCIO} is present to keep the I/O pins from floating. The 3.3-V tolerance control circuit permits the I/O pins to be driven by 3.3 V before V_{CCIO} and/or V_{CCINT} and/or V_{CCPD} are powered, and it prevents the I/O pins from driving out when the device is not in user mode. The hot socket circuit prevents I/O pins from internally powering V_{CCIO}, V_{CCINT}, and V_{CCPD} when driven by external signals before the device is powered.

Figure 4–2 shows a transistor level cross section of the Stratix II device I/O buffers. This design ensures that the output buffers do not drive when V_{CCIO} is powered before V_{CCINT} or if the I/O pad voltage is higher than V_{CCIO}. This also applies for sudden voltage spikes during hot insertion. There is no current path from signal I/O pins to V_{CCINT} or V_{CCIO} or V_{CCPD} during hot insertion. The V_{PAD} leakage current charges the 3.3-V tolerant circuit capacitance.

Figure 4–2. Transistor Level Diagram of FPGA Device I/O Buffers

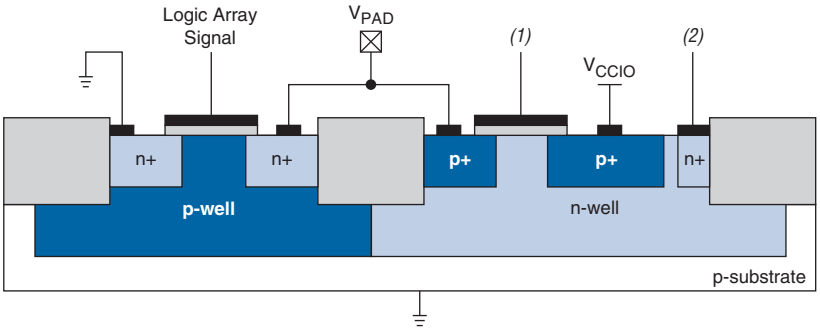

Notes to Figure 4–2:

(1) This is the logic array signal or the larger of either the V_{CCIO} or V_{PAD} signal.

(2) This is the larger of either the V_{CCIO} or V_{PAD} signal.

Power-On Reset Circuitry

Stratix II devices have a POR circuit to keep the whole device system in reset state until the power supply voltage levels have stabilized during power-up. The POR circuit monitors the V_{CCINT}, V_{CCIO}, and V_{CCPD} voltage levels and tri-states all the user I/O pins while V_{CC} is ramping up until normal user levels are reached. The POR circuitry also ensures that all eight I/O bank V_{CCIO} voltages, V_{CCPD} voltage, as well as the logic array V_{CCINT} voltage, reach an acceptable level before configuration is triggered. After the Stratix II device enters user mode, the POR circuit continues to monitor the V_{CCINT} voltage level so that a brown-out condition during user mode can be detected. If there is a V_{CCINT} voltage sag below the Stratix II operational level during user mode, the POR circuit resets the device.

When power is applied to a Stratix II device, a power-on-reset event occurs if V_{CC} reaches the recommended operating range within a certain period of time (specified as a maximum V_{CC} rise time). The maximum V_{CC} rise time for Stratix II device is 100 ms. Stratix II devices provide a dedicated input pin (`PORSEL`) to select POR delay times of 12 or 100 ms during power-up. When the `PORSEL` pin is connected to ground, the POR time is 100 ms. When the `PORSEL` pin is connected to V_{CC}, the POR time is 12 ms.

Document Revision History

Table 4–1 shows the revision history for this chapter.

Table 4–1. Document Revision History

Date and Document Version	Changes Made	Summary of Changes
May 2007, v3.2	Moved the Document Revision History section to the end of the chapter.	—
April 2006, v3.1	• Updated “Signal Pins Do Not Drive the VCCIO, VCCINT or VCCPD Power Supplies” section.	• Updated hot socketing AC specification.
May 2005, v3.0	• Updated “Signal Pins Do Not Drive the VCCIO, VCCINT or VCCPD Power Supplies” section. • Removed information on ESD protection.	—
January 2005, v2.1	Updated input rise and fall time.	—
January 2005, v2.0	Updated the “Hot Socketing Feature Implementation in Stratix II Devices”, “ESD Protection”, and “Power-On Reset Circuitry” sections.	—
July 2004, v1.1	• Updated all tables. • Added tables.	—
February 2004, v1.0	Added document to the Stratix II Device Handbook.	—

5. DC & Switching Characteristics

SII51005-4.5

Operating Conditions

Stratix® II devices are offered in both commercial and industrial grades. Industrial devices are offered in -4 speed grades and commercial devices are offered in -3 (fastest), -4, -5 speed grades.

Tables 5–1 through 5–32 provide information about absolute maximum ratings, recommended operating conditions, DC electrical characteristics, and other specifications for Stratix II devices.

Absolute Maximum Ratings

Table 5–1 contains the absolute maximum ratings for the Stratix II device family.

Table 5–1. Stratix II Device Absolute Maximum Ratings *Notes (1), (2), (3)*

Symbol	Parameter	Conditions	Minimum	Maximum	Unit
V_{CCINT}	Supply voltage	With respect to ground	–0.5	1.8	V
V_{CCIO}	Supply voltage	With respect to ground	–0.5	4.6	V
V_{CCPD}	Supply voltage	With respect to ground	–0.5	4.6	V
V_{CCA}	Analog power supply for PLLs	With respect to ground	–0.5	1.8	V
V_{CCD}	Digital power supply for PLLs	With respect to ground	–0.5	1.8	V
V_I	DC input voltage *(4)*		–0.5	4.6	V
I_{OUT}	DC output current, per pin		–25	40	mA
T_{STG}	Storage temperature	No bias	–65	150	°C
T_J	Junction temperature	BGA packages under bias	–55	125	°C

Notes to Tables 5–1

(1) See the *Operating Requirements for Altera Devices Data Sheet*.

(2) Conditions beyond those listed in Table 5–1 may cause permanent damage to a device. Additionally, device operation at the absolute maximum ratings for extended periods of time may have adverse affects on the device.

(3) Supply voltage specifications apply to voltage readings taken at the device pins, not at the power supply.

(4) During transitions, the inputs may overshoot to the voltage shown in Table 5–2 based upon the input duty cycle. The DC case is equivalent to 100% duty cycle. During transitions, the inputs may undershoot to –2.0 V for input currents less than 100 mA and periods shorter than 20 ns.

Table 5–2. Maximum Duty Cycles in Voltage Transitions

Symbol	Parameter	Condition	Maximum Duty Cycles	Unit
V_I	Maximum duty cycles in voltage transitions	V_I = 4.0 V	100	%
		V_I = 4.1 V	90	%
		V_I = 4.2 V	50	%
		V_I = 4.3 V	30	%
		V_I = 4.4 V	17	%
		V_I = 4.5 V	10	%

Recommended Operating Conditions

Table 5–3 contains the Stratix II device family recommended operating conditions.

Table 5–3. Stratix II Device Recommended Operating Conditions (Part 1 of 2) *Note (1)*

Symbol	Parameter	Conditions	Minimum	Maximum	Unit
V_{CCINT}	Supply voltage for internal logic	100 µs ≤ risetime ≤ 100 ms *(3)*	1.15	1.25	V
V_{CCIO}	Supply voltage for input and output buffers, 3.3-V operation	100 µs ≤ risetime ≤ 100 ms *(3)*, *(6)*	3.135 (3.00)	3.465 (3.60)	V
	Supply voltage for input and output buffers, 2.5-V operation	100 µs ≤ risetime ≤ 100 ms *(3)*	2.375	2.625	V
	Supply voltage for input and output buffers, 1.8-V operation	100 µs ≤ risetime ≤ 100 ms *(3)*	1.71	1.89	V
	Supply voltage for output buffers, 1.5-V operation	100 µs ≤ risetime ≤ 100 ms *(3)*	1.425	1.575	V
	Supply voltage for input and output buffers, 1.2-V operation	100 µs ≤ risetime ≤ 100 ms *(3)*	1.14	1.26	V
V_{CCPD}	Supply voltage for pre-drivers as well as configuration and JTAG I/O buffers.	100 µs ≤ risetime ≤ 100 ms *(4)*	3.135	3.465	V
V_{CCA}	Analog power supply for PLLs	100 µs ≤ risetime ≤ 100 ms *(3)*	1.15	1.25	V
V_{CCD}	Digital power supply for PLLs	100 µs ≤ risetime ≤ 100 ms *(3)*	1.15	1.25	V
V_I	Input voltage (see Table 5–2)	*(2)*, *(5)*	–0.5	4.0	V
V_O	Output voltage		0	V_{CCIO}	V

Table 5–3. Stratix II Device Recommended Operating Conditions (Part 2 of 2) *Note (1)*

Symbol	Parameter	Conditions	Minimum	Maximum	Unit
T_J	Operating junction temperature	For commercial use	0	85	°C
		For industrial use	–40	100	°C
		For military use *(7)*	–55	125	°C

Notes to Table 5–3:

(1) Supply voltage specifications apply to voltage readings taken at the device pins, not at the power supply.

(2) During transitions, the inputs may overshoot to the voltage shown in Table 5–2 based upon the input duty cycle. The DC case is equivalent to 100% duty cycle. During transitions, the inputs may undershoot to –2.0 V for input currents less than 100 mA and periods shorter than 20 ns.

(3) Maximum V_{CC} rise time is 100 ms, and V_{CC} must rise monotonically from ground to V_{CC}.

(4) V_{CCPD} must ramp-up from 0 V to 3.3 V within 100 µs to 100 ms. If V_{CCPD} is not ramped up within this specified time, your Stratix II device does not configure successfully. If your system does not allow for a V_{CCPD} ramp-up time of 100 ms or less, you must hold `nCONFIG` low until all power supplies are reliable.

(5) All pins, including dedicated inputs, clock, I/O, and JTAG pins, may be driven before V_{CCINT}, V_{CCPD}, and V_{CCIO} are powered.

(6) V_{CCIO} maximum and minimum conditions for PCI and PCI-X are shown in parentheses.

(7) For more information, refer to the *Stratix II Military Temperature Range Support* technical brief.

DC Electrical Characteristics

Table 5–4 shows the Stratix II device family DC electrical characteristics.

Table 5–4. Stratix II Device DC Operating Conditions (Part 1 of 2) *Note (1)*

Symbol	Parameter	Conditions		Minimum	Typical	Maximum	Unit
I_I	Input pin leakage current	$V_I = V_{CCIOmax}$ to 0 V *(2)*		–10		10	µA
I_{OZ}	Tri-stated I/O pin leakage current	$V_O = V_{CCIOmax}$ to 0 V *(2)*		–10		10	µA
I_{CCINT0}	V_{CCINT} supply current (standby)	V_I = ground, no load, no toggling inputs T_J = 25° C	EP2S15		0.25	*(3)*	A
			EP2S30		0.30	*(3)*	A
			EP2S60		0.50	*(3)*	A
			EP2S90		0.62	*(3)*	A
			EP2S130		0.82	*(3)*	A
			EP2S180		1.12	*(3)*	A
I_{CCPD0}	V_{CCPD} supply current (standby)	V_I = ground, no load, no toggling inputs T_J = 25° C, V_{CCPD} = 3.3V	EP2S15		2.2	*(3)*	mA
			EP2S30		2.7	*(3)*	mA
			EP2S60		3.6	*(3)*	mA
			EP2S90		4.3	*(3)*	mA
			EP2S130		5.4	*(3)*	mA
			EP2S180		6.8	*(3)*	mA

Table 5–4. Stratix II Device DC Operating Conditions (Part 2 of 2) *Note (1)*

Symbol	Parameter	Conditions		Minimum	Typical	Maximum	Unit
I_{CCI00}	V_{CCIO} supply current (standby)	V_I = ground, no load, no toggling inputs T_J = 25° C	EP2S15		4.0	*(3)*	mA
			EP2S30		4.0	*(3)*	mA
			EP2S60		4.0	*(3)*	mA
			EP2S90		4.0	*(3)*	mA
			EP2S130		4.0	*(3)*	mA
			EP2S180		4.0	*(3)*	mA
R_{CONF} *(4)*	Value of I/O pin pull-up resistor before and during configuration	Vi = 0; V_{CCIO} = 3.3 V		10	25	50	kΩ
		Vi = 0; V_{CCIO} = 2.5 V		15	35	70	kΩ
		Vi = 0; V_{CCIO} = 1.8 V		30	50	100	kΩ
		Vi = 0; V_{CCIO} = 1.5 V		40	75	150	kΩ
		Vi = 0; V_{CCIO} = 1.2 V		50	90	170	kΩ
	Recommended value of I/O pin external pull-down resistor before and during configuration				1	2	kΩ

Notes to Table 5–4:

(1) Typical values are for T_A = 25°C, V_{CCINT} = 1.2 V, and V_{CCIO} = 1.5 V, 1.8 V, 2.5 V, and 3.3 V.

(2) This value is specified for normal device operation. The value may vary during power-up. This applies for all V_{CCIO} settings (3.3, 2.5, 1.8, and 1.5 V).

(3) Maximum values depend on the actual T_J and design utilization. See the Excel-based PowerPlay Early Power Estimator (available at **www.altera.com**) or the Quartus II PowerPlay Power Analyzer feature for maximum values. See the section "Power Consumption" on page 5–20 for more information.

(4) Pin pull-up resistance values are lower if an external source drives the pin higher than V_{CCIO}.

I/O Standard Specifications

Tables 5–5 through 5–32 show the Stratix II device family I/O standard specifications.

Table 5–5. LVTTL Specifications (Part 1 of 2)

Symbol	Parameter	Conditions	Minimum	Maximum	Unit
V_{CCIO} *(1)*	Output supply voltage		3.135	3.465	V
V_{IH}	High-level input voltage		1.7	4.0	V
V_{IL}	Low-level input voltage		–0.3	0.8	V
V_{OH}	High-level output voltage	I_{OH} = –4 mA *(2)*	2.4		V

Table 5–5. LVTTL Specifications (Part 2 of 2)

Symbol	Parameter	Conditions	Minimum	Maximum	Unit
V_{OL}	Low-level output voltage	I_{OL} = 4 mA *(2)*		0.45	V

Notes to Tables 5–5:

(1) Stratix II devices comply to the narrow range for the supply voltage as specified in the EIA/JEDEC Standard, JESD8-B.

(2) This specification is supported across all the programmable drive strength settings available for this I/O standard as shown in the *Stratix II Architecture* chapter in volume 1 of the *Stratix II Device Handbook*.

Table 5–6. LVCMOS Specifications

Symbol	Parameter	Conditions	Minimum	Maximum	Unit
V_{CCIO} *(1)*	Output supply voltage		3.135	3.465	V
V_{IH}	High-level input voltage		1.7	4.0	V
V_{IL}	Low-level input voltage		–0.3	0.8	V
V_{OH}	High-level output voltage	V_{CCIO} = 3.0, I_{OH} = –0.1 mA *(2)*	V_{CCIO} – 0.2		V
V_{OL}	Low-level output voltage	V_{CCIO} = 3.0, I_{OL} = 0.1 mA *(2)*		0.2	V

Notes to Table 5–6:

(1) Stratix II devices comply to the narrow range for the supply voltage as specified in the EIA/JEDEC Standard, JESD8-B.

(2) This specification is supported across all the programmable drive strength available for this I/O standard as shown in the *Stratix II Architecture* chapter in volume 1 of the *Stratix II Device Handbook*.

Table 5–7. 2.5-V I/O Specifications

Symbol	Parameter	Conditions	Minimum	Maximum	Unit
V_{CCIO} *(1)*	Output supply voltage		2.375	2.625	V
V_{IH}	High-level input voltage		1.7	4.0	V
V_{IL}	Low-level input voltage		–0.3	0.7	V
V_{OH}	High-level output voltage	I_{OH} = –1mA *(2)*	2.0		V
V_{OL}	Low-level output voltage	I_{OL} = 1 mA *(2)*		0.4	V

Notes to Table 5–7:

(1) Stratix II devices V_{CCIO} voltage level support of 2.5 ± -5% is narrower than defined in the Normal Range of the EIA/JEDEC standard.

(2) This specification is supported across all the programmable drive settings available for this I/O standard as shown in the *Stratix II Architecture* chapter in volume 1 of the *Stratix II Device Handbook*.

Table 5–8. 1.8-V I/O Specifications

Symbol	Parameter	Conditions	Minimum	Maximum	Unit
V_{CCIO} *(1)*	Output supply voltage		1.71	1.89	V
V_{IH}	High-level input voltage		$0.65 \times V_{CCIO}$	2.25	V
V_{IL}	Low-level input voltage		–0.30	$0.35 \times V_{CCIO}$	V
V_{OH}	High-level output voltage	I_{OH} = –2 mA *(2)*	V_{CCIO} – 0.45		V
V_{OL}	Low-level output voltage	I_{OL} = 2 mA *(2)*		0.45	V

Notes to Table 5–8:

(1) The Stratix II device family's V_{CCIO} voltage level support of 1.8 ± -5% is narrower than defined in the Normal Range of the EIA/JEDEC standard.

(2) This specification is supported across all the programmable drive settings available for this I/O standard as shown in the *Stratix II Architecture* chapter in volume 1 of the *Stratix II Device Handbook*.

Table 5–9. 1.5-V I/O Specifications

Symbol	Parameter	Conditions	Minimum	Maximum	Unit
V_{CCIO} *(1)*	Output supply voltage		1.425	1.575	V
V_{IH}	High-level input voltage		$0.65 \times V_{CCIO}$	V_{CCIO} + 0.30	V
V_{IL}	Low-level input voltage		–0.30	$0.35 \times V_{CCIO}$	V
V_{OH}	High-level output voltage	I_{OH} = –2 mA *(2)*	$0.75 \times V_{CCIO}$		V
V_{OL}	Low-level output voltage	I_{OL} = 2 mA *(2)*		$0.25 \times V_{CCIO}$	V

Notes to Table 5–9:

(1) The Stratix II device family's V_{CCIO} voltage level support of 1.5 ± -5% is narrower than defined in the Normal Range of the EIA/JEDEC standard.

(2) This specification is supported across all the programmable drive settings available for this I/O standard as shown in the *Stratix II Architecture* chapter in volume 1 of the *Stratix II Device Handbook*.

Figures 5–1 and 5–2 show receiver input and transmitter output waveforms, respectively, for all differential I/O standards (LVDS, LVPECL, and HyperTransport technology).

Figure 5–1. Receiver Input Waveforms for Differential I/O Standards

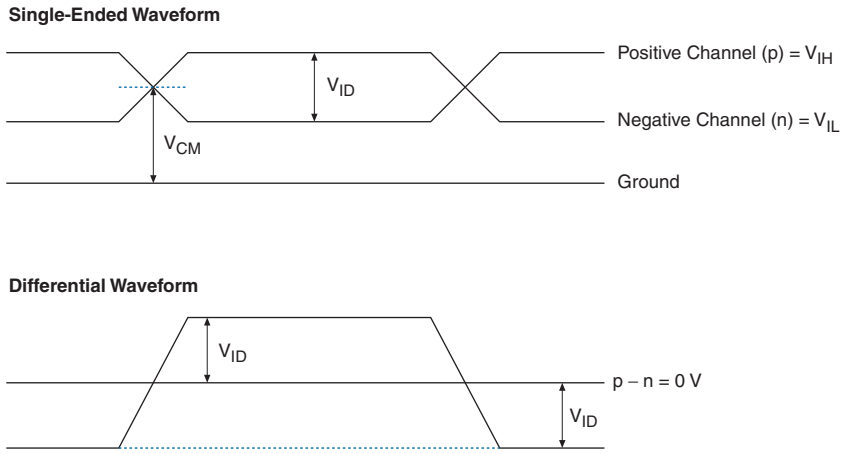

Figure 5–2. Transmitter Output Waveforms for Differential I/O Standards

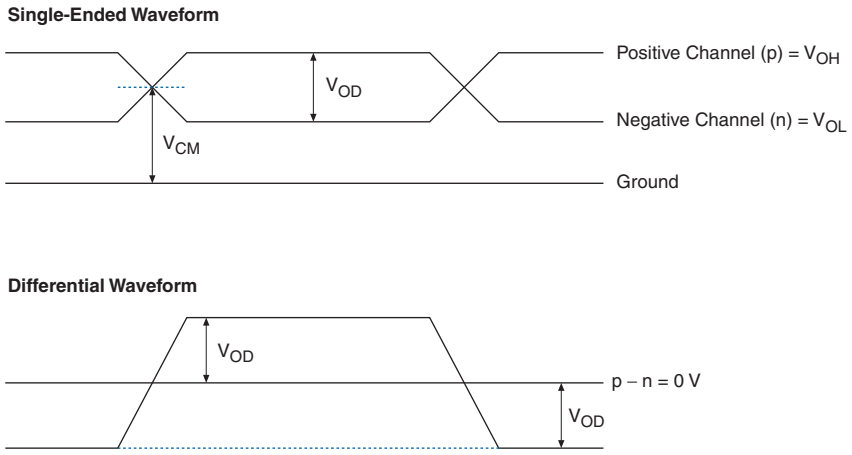

Table 5–10. 2.5-V LVDS I/O Specifications

Symbol	Parameter	Conditions	Minimum	Typical	Maximum	Unit
V_{CCIO}	I/O supply voltage for left and right I/O banks (1, 2, 5, and 6)		2.375	2.500	2.625	V
V_{ID}	Input differential voltage swing (single-ended)		100	350	900	mV
V_{ICM}	Input common mode voltage		200	1,250	1,800	mV
V_{OD}	Output differential voltage (single-ended)	R_L = 100 Ω	250		450	mV
V_{OCM}	Output common mode voltage	R_L = 100 Ω	1.125		1.375	V
R_L	Receiver differential input discrete resistor (external to Stratix II devices)		90	100	110	Ω

Table 5–11. 3.3-V LVDS I/O Specifications

Symbol	Parameter	Conditions	Minimum	Typical	Maximum	Unit
V_{CCIO} *(1)*	I/O supply voltage for top and bottom PLL banks (9, 10, 11, and 12)		3.135	3.300	3.465	V
V_{ID}	Input differential voltage swing (single-ended)		100	350	900	mV
V_{ICM}	Input common mode voltage		200	1,250	1,800	mV
V_{OD}	Output differential voltage (single-ended)	R_L = 100 Ω	250		710	mV
V_{OCM}	Output common mode voltage	R_L = 100 Ω	840		1,570	mV
R_L	Receiver differential input discrete resistor (external to Stratix II devices)		90	100	110	Ω

Note to Table 5–11:

(1) The top and bottom clock input differential buffers in I/O banks 3, 4, 7, and 8 are powered by V_{CCINT}, not V_{CCIO}. The PLL clock output/feedback differential buffers are powered by `VCC_PLL_OUT`. For differential clock output/feedback operation, `VCC_PLL_OUT` should be connected to 3.3 V.

Table 5–12. LVPECL Specifications

Symbol	Parameter	Conditions	Minimum	Typical	Maximum	Unit
V_{CCIO} *(1)*	I/O supply voltage		3.135	3.300	3.465	V
V_{ID}	Input differential voltage swing (single-ended)		300	600	1,000	mV
V_{ICM}	Input common mode voltage		1.0		2.5	V
V_{OD}	Output differential voltage (single-ended)	R_L = 100 Ω	525		970	mV
V_{OCM}	Output common mode voltage	R_L = 100 Ω	1,650		2,250	mV
R_L	Receiver differential input resistor		90	100	110	Ω

Note to Table 5–12:

(1) The top and bottom clock input differential buffers in I/O banks 3, 4, 7, and 8 are powered by V_{CCINT}, not V_{CCIO}. The PLL clock output/feedback differential buffers are powered by `VCC_PLL_OUT`. For differential clock output/feedback operation, `VCC_PLL_OUT` should be connected to 3.3 V.

Table 5–13. HyperTransport Technology Specifications

Symbol	Parameter	Conditions	Minimum	Typical	Maximum	Unit
V_{CCIO}	I/O supply voltage for left and right I/O banks (1, 2, 5, and 6)		2.375	2.500	2.625	V
V_{ID}	Input differential voltage swing (single-ended)	R_L = 100 Ω	300	600	900	mV
V_{ICM}	Input common mode voltage	R_L = 100 Ω	385	600	845	mV
V_{OD}	Output differential voltage (single-ended)	R_L = 100 Ω	400	600	820	mV
ΔV_{OD}	Change in V_{OD} between high and low	R_L = 100 Ω			75	mV
V_{OCM}	Output common mode voltage	R_L = 100 Ω	440	600	780	mV
ΔV_{OCM}	Change in V_{OCM} between high and low	R_L = 100 Ω			50	mV
R_L	Receiver differential input resistor		90	100	110	Ω

Table 5–14. 3.3-V PCI Specifications (Part 1 of 2)

Symbol	Parameter	Conditions	Minimum	Typical	Maximum	Unit
V_{CCIO}	Output supply voltage		3.0	3.3	3.6	V
V_{IH}	High-level input voltage		$0.5 \times V_{CCIO}$		V_{CCIO} + 0.5	V

Table 5–14. 3.3-V PCI Specifications (Part 2 of 2)

Symbol	Parameter	Conditions	Minimum	Typical	Maximum	Unit
V_{IL}	Low-level input voltage		–0.3		$0.3 \times V_{CCIO}$	V
V_{OH}	High-level output voltage	I_{OUT} = –500 µA	$0.9 \times V_{CCIO}$			V
V_{OL}	Low-level output voltage	I_{OUT} = 1,500 µA			$0.1 \times V_{CCIO}$	V

Table 5–15. PCI-X Mode 1 Specifications

Symbol	Parameter	Conditions	Minimum	Typical	Maximum	Unit
V_{CCIO}	Output supply voltage		3.0		3.6	V
V_{IH}	High-level input voltage		$0.5 \times V_{CCIO}$		V_{CCIO} + 0.5	V
V_{IL}	Low-level input voltage		–0.30		$0.35 \times V_{CCIO}$	V
V_{IPU}	Input pull-up voltage		$0.7 \times V_{CCIO}$			V
V_{OH}	High-level output voltage	I_{OUT} = –500 µA	$0.9 \times V_{CCIO}$			V
V_{OL}	Low-level output voltage	I_{OUT} = 1,500 µA			$0.1 \times V_{CCIO}$	V

Table 5–16. SSTL-18 Class I Specifications

Symbol	Parameter	Conditions	Minimum	Typical	Maximum	Unit
V_{CCIO}	Output supply voltage		1.71	1.80	1.89	V
V_{REF}	Reference voltage		0.855	0.900	0.945	V
V_{TT}	Termination voltage		V_{REF} – 0.04	V_{REF}	V_{REF} + 0.04	V
V_{IH} (DC)	High-level DC input voltage		V_{REF} + 0.125			V
V_{IL} (DC)	Low-level DC input voltage				V_{REF} – 0.125	V
V_{IH} (AC)	High-level AC input voltage		V_{REF} + 0.25			V
V_{IL} (AC)	Low-level AC input voltage				V_{REF} – 0.25	V
V_{OH}	High-level output voltage	I_{OH} = –6.7 mA *(1)*	V_{TT} + 0.475			V
V_{OL}	Low-level output voltage	I_{OL} = 6.7 mA *(1)*			V_{TT} – 0.475	V

Note to Table 5–16:

(1) This specification is supported across all the programmable drive settings available for this I/O standard as shown in the *Stratix II Architecture* chapter in volume 1 of the *Stratix II Device Handbook*.

Table 5–17. SSTL-18 Class II Specifications

Symbol	Parameter	Conditions	Minimum	Typical	Maximum	Unit
V_{CCIO}	Output supply voltage		1.71	1.80	1.89	V
V_{REF}	Reference voltage		0.855	0.900	0.945	V
V_{TT}	Termination voltage		V_{REF} – 0.04	V_{REF}	V_{REF} + 0.04	V
V_{IH} (DC)	High-level DC input voltage		V_{REF} + 0.125			V
V_{IL} (DC)	Low-level DC input voltage				V_{REF} – 0.125	V
V_{IH} (AC)	High-level AC input voltage		V_{REF} + 0.25			V
V_{IL} (AC)	Low-level AC input voltage				V_{REF} – 0.25	V
V_{OH}	High-level output voltage	I_{OH} = –13.4 mA *(1)*	V_{CCIO} – 0.28			V
V_{OL}	Low-level output voltage	I_{OL} = 13.4 mA *(1)*			0.28	V

Note to Table 5–17:

(1) This specification is supported across all the programmable drive settings available for this I/O standard as shown in the *Stratix II Architecture* chapter in volume 1 of the *Stratix II Device Handbook*.

Table 5–18. SSTL-18 Class I & II Differential Specifications

Symbol	Parameter	Conditions	Minimum	Typical	Maximum	Unit
V_{CCIO}	Output supply voltage		1.71	1.80	1.89	V
V_{SWING} (DC)	DC differential input voltage		0.25			V
V_X (AC)	AC differential input cross point voltage		(V_{CCIO}/2) – 0.175		(V_{CCIO}/2) + 0.175	V
V_{SWING} (AC)	AC differential input voltage		0.5			V
V_{ISO}	Input clock signal offset voltage			0.5 × V_{CCIO}		V
ΔV_{ISO}	Input clock signal offset voltage variation			±200		mV
V_{OX} (AC)	AC differential cross point voltage		(V_{CCIO}/2) – 0.125		(V_{CCIO}/2) + 0.125	V

Table 5–19. SSTL-2 Class I Specifications

Symbol	Parameter	Conditions	Minimum	Typical	Maximum	Unit
V_{CCIO}	Output supply voltage		2.375	2.500	2.625	V
V_{TT}	Termination voltage		V_{REF} – 0.04	V_{REF}	V_{REF} + 0.04	V
V_{REF}	Reference voltage		1.188	1.250	1.313	V
V_{IH} (DC)	High-level DC input voltage		V_{REF} + 0.18		3.00	V
V_{IL} (DC)	Low-level DC input voltage		–0.30		V_{REF} – 0.18	V
V_{IH} (AC)	High-level AC input voltage		V_{REF} + 0.35			V
V_{IL} (AC)	Low-level AC input voltage				V_{REF} - 0.35	V
V_{OH}	High-level output voltage	I_{OH} = –8.1 mA *(1)*	V_{TT} + 0.57			V
V_{OL}	Low-level output voltage	I_{OL} = 8.1 mA *(1)*			V_{TT} – 0.57	V

Note to Table 5–19:

(1) This specification is supported across all the programmable drive settings available for this I/O standard as shown in the *Stratix II Architecture* chapter in volume 1 of the *Stratix II Device Handbook*.

Table 5–20. SSTL-2 Class II Specifications

Symbol	Parameter	Conditions	Minimum	Typical	Maximum	Unit
V_{CCIO}	Output supply voltage		2.375	2.500	2.625	V
V_{TT}	Termination voltage		V_{REF} – 0.04	V_{REF}	V_{REF} + 0.04	V
V_{REF}	Reference voltage		1.188	1.250	1.313	V
V_{IH} (DC)	High-level DC input voltage		V_{REF} + 0.18		V_{CCIO} + 0.30	V
V_{IL} (DC)	Low-level DC input voltage		–0.30		V_{REF} – 0.18	V
V_{IH} (AC)	High-level AC input voltage		V_{REF} + 0.35			V
V_{IL} (AC)	Low-level AC input voltage				V_{REF} - 0.35	V
V_{OH}	High-level output voltage	I_{OH} = –16.4 mA *(1)*	V_{TT} + 0.76			V
V_{OL}	Low-level output voltage	I_{OL} = 16.4 mA *(1)*			V_{TT} – 0.76	V

Note to Table 5–20:

(1) This specification is supported across all the programmable drive settings available for this I/O standard as shown in the *Stratix II Architecture* chapter in volume 1 of the *Stratix II Device Handbook*.

Table 5–21. SSTL-2 Class I & II Differential Specifications

Symbol	Parameter	Conditions	Minimum	Typical	Maximum	Unit
V_{CCIO}	Output supply voltage		2.375	2.500	2.625	V
V_{SWING} (DC)	DC differential input voltage		0.36			V
V_X (AC)	AC differential input cross point voltage		$(V_{CCIO}/2) – 0.2$		$(V_{CCIO}/2) + 0.2$	V
V_{SWING} (AC)	AC differential input voltage		0.7			V
V_{ISO}	Input clock signal offset voltage			$0.5 \times V_{CCIO}$		V
ΔV_{ISO}	Input clock signal offset voltage variation			±200		mV
V_{OX} (AC)	AC differential output cross point voltage		$(V_{CCIO}/2) – 0.2$		$(V_{CCIO}/2) + 0.2$	V

Table 5–22. 1.2-V HSTL Specifications

Symbol	Parameter	Conditions	Minimum	Typical	Maximum	Unit
V_{CCIO}	Output supply voltage		1.14	1.20	1.26	V
V_{REF}	Reference voltage		$0.48 \times V_{CCIO}$	$0.50 \times V_{CCIO}$	$0.52 \times V_{CCIO}$	V
V_{IH} (DC)	High-level DC input voltage		$V_{REF} + 0.08$		$V_{CCIO} + 0.15$	V
V_{IL} (DC)	Low-level DC input voltage		–0.15		$V_{REF} – 0.08$	V
V_{IH} (AC)	High-level AC input voltage		$V_{REF} + 0.15$		$V_{CCIO} + 0.24$	V
V_{IL} (AC)	Low-level AC input voltage		–0.24		$V_{REF} – 0.15$	V
V_{OH}	High-level output voltage	$I_{OH} = 8$ mA	$V_{REF} + 0.15$		$V_{CCIO} + 0.15$	V
V_{OL}	Low-level output voltage	$I_{OH} = –8$ mA	–0.15		$V_{REF} – 0.15$	V

Table 5–23. 1.5-V HSTL Class I Specifications

Symbol	Parameter	Conditions	Minimum	Typical	Maximum	Unit
V_{CCIO}	Output supply voltage		1.425	1.500	1.575	V
V_{REF}	Input reference voltage		0.713	0.750	0.788	V
V_{TT}	Termination voltage		0.713	0.750	0.788	V
V_{IH} (DC)	DC high-level input voltage		V_{REF} + 0.1			V
V_{IL} (DC)	DC low-level input voltage		–0.3		V_{REF} – 0.1	V
V_{IH} (AC)	AC high-level input voltage		V_{REF} + 0.2			V
V_{IL} (AC)	AC low-level input voltage				V_{REF} – 0.2	V
V_{OH}	High-level output voltage	I_{OH} = 8 mA *(1)*	V_{CCIO} – 0.4			V
V_{OL}	Low-level output voltage	I_{OH} = –8 mA *(1)*			0.4	V

Note to Table 5–23:

(1) This specification is supported across all the programmable drive settings available for this I/O standard as shown in the *Stratix II Architecture* chapter in volume 1 of the *Stratix II Device Handbook*.

Table 5–24. 1.5-V HSTL Class II Specifications

Symbol	Parameter	Conditions	Minimum	Typical	Maximum	Unit
V_{CCIO}	Output supply voltage		1.425	1.500	1.575	V
V_{REF}	Input reference voltage		0.713	0.750	0.788	V
V_{TT}	Termination voltage		0.713	0.750	0.788	V
V_{IH} (DC)	DC high-level input voltage		V_{REF} + 0.1			V
V_{IL} (DC)	DC low-level input voltage		–0.3		V_{REF} – 0.1	V
V_{IH} (AC)	AC high-level input voltage		V_{REF} + 0.2			V
V_{IL} (AC)	AC low-level input voltage				V_{REF} – 0.2	V
V_{OH}	High-level output voltage	I_{OH} = 16 mA *(1)*	V_{CCIO} – 0.4			V
V_{OL}	Low-level output voltage	I_{OH} = –16 mA *(1)*			0.4	V

Note to Table 5–24:

(1) This specification is supported across all the programmable drive settings available for this I/O standard as shown in the *Stratix II Architecture* chapter in volume 1 of the *Stratix II Device Handbook*.

Table 5–25. 1.5-V HSTL Class I & II Differential Specifications

Symbol	Parameter	Conditions	Minimum	Typical	Maximum	Unit
V_{CCIO}	I/O supply voltage		1.425	1.500	1.575	V
V_{DIF} (DC)	DC input differential voltage		0.2			V
V_{CM} (DC)	DC common mode input voltage		0.68		0.90	V
V_{DIF} (AC)	AC differential input voltage		0.4			V
V_{OX} (AC)	AC differential cross point voltage		0.68		0.90	V

Table 5–26. 1.8-V HSTL Class I Specifications

Symbol	Parameter	Conditions	Minimum	Typical	Maximum	Unit
V_{CCIO}	Output supply voltage		1.71	1.80	1.89	V
V_{REF}	Input reference voltage		0.85	0.90	0.95	V
V_{TT}	Termination voltage		0.85	0.90	0.95	V
V_{IH} (DC)	DC high-level input voltage		V_{REF} + 0.1			V
V_{IL} (DC)	DC low-level input voltage		–0.3		V_{REF} – 0.1	V
V_{IH} (AC)	AC high-level input voltage		V_{REF} + 0.2			V
V_{IL} (AC)	AC low-level input voltage				V_{REF} – 0.2	V
V_{OH}	High-level output voltage	I_{OH} = 8 mA *(1)*	V_{CCIO} – 0.4			V
V_{OL}	Low-level output voltage	I_{OH} = –8 mA *(1)*			0.4	V

Note to Table 5–26:

(1) This specification is supported across all the programmable drive settings available for this I/O standard as shown in the *Stratix II Architecture* chapter in volume 1 of the *Stratix II Device Handbook*.

Table 5–27. 1.8-V HSTL Class II Specifications

Symbol	Parameter	Conditions	Minimum	Typical	Maximum	Unit
V_{CCIO}	Output supply voltage		1.71	1.80	1.89	V
V_{REF}	Input reference voltage		0.85	0.90	0.95	V
V_{TT}	Termination voltage		0.85	0.90	0.95	V
V_{IH} (DC)	DC high-level input voltage		V_{REF} + 0.1			V
V_{IL} (DC)	DC low-level input voltage		–0.3		V_{REF} – 0.1	V
V_{IH} (AC)	AC high-level input voltage		V_{REF} + 0.2			V
V_{IL} (AC)	AC low-level input voltage				V_{REF} – 0.2	V
V_{OH}	High-level output voltage	I_{OH} = 16 mA *(1)*	V_{CCIO} – 0.4			V
V_{OL}	Low-level output voltage	I_{OH} = –16 mA *(1)*			0.4	V

Note to Table 5–27:

(1) This specification is supported across all the programmable drive settings available for this I/O standard as shown in the *Stratix II Architecture* chapter in volume 1 of the *Stratix II Device Handbook*.

Table 5–28. 1.8-V HSTL Class I & II Differential Specifications

Symbol	Parameter	Conditions	Minimum	Typical	Maximum	Unit
V_{CCIO}	I/O supply voltage		1.71	1.80	1.89	V
V_{DIF} (DC)	DC input differential voltage		0.2		V_{CCIO} + 0.6 V	V
V_{CM} (DC)	DC common mode input voltage		0.78		1.12	V
V_{DIF} (AC)	AC differential input voltage		0.4		V_{CCIO} + 0.6 V	V
V_{OX} (AC)	AC differential cross point voltage		0.68		0.90	V

Bus Hold Specifications

Table 5–29 shows the Stratix II device family bus hold specifications.

Table 5–29. Bus Hold Parameters

Parameter	Conditions	V_{CCIO} Level										Unit
		1.2 V		1.5 V		1.8 V		2.5 V		3.3 V		
		Min	Max	Min	Max	Min	Max	Min	Max	Min	Max	
Low sustaining current	$V_{IN} > V_{IL}$ (maximum)	22.5		25.0		30.0		50.0		70.0		µA
High sustaining current	$V_{IN} < V_{IH}$ (minimum)	–22.5		–25.0		–30.0		–50.0		–70.0		µA
Low overdrive current	$0 V < V_{IN} < V_{CCIO}$		120		160		200		300		500	µA
High overdrive current	$0 V < V_{IN} < V_{CCIO}$		–120		–160		–200		–300		–500	µA
Bus-hold trip point		0.45	0.95	0.50	1.00	0.68	1.07	0.70	1.70	0.80	2.00	V

On-Chip Termination Specifications

Tables 5–30 and 5–31 define the specification for internal termination resistance tolerance when using series or differential on-chip termination.

Table 5–30. Series On-Chip Termination Specification for Top & Bottom I/O Banks (Part 1 of 2)
Notes (1), 2

Symbol	Description	Conditions	Resistance Tolerance		
			Commercial Max	Industrial Max	Unit
25-Ω R_S 3.3/2.5	Internal series termination with calibration (25-Ω setting)	V_{CCIO} = 3.3/2.5 V	±5	±10	%
	Internal series termination without calibration (25-Ω setting)	V_{CCIO} = 3.3/2.5 V	±30	±30	%

Table 5–30. Series On-Chip Termination Specification for Top & Bottom I/O Banks (Part 2 of 2)
Notes (1), 2

Symbol	Description	Conditions	Resistance Tolerance		
			Commercial Max	Industrial Max	Unit
50-Ω R_S 3.3/2.5	Internal series termination with calibration (50-Ω setting)	V_{CCIO} = 3.3/2.5 V	±5	±10	%
	Internal series termination without calibration (50-Ω setting)	V_{CCIO} = 3.3/2.5 V	±30	±30	%
50-Ω R_T 2.5	Internal parallel termination with calibration (50-Ω setting)	V_{CCIO} = 1.8 V	±30	±30	%
25-Ω R_S 1.8	Internal series termination with calibration (25-Ω setting)	V_{CCIO} = 1.8 V	±5	±10	%
	Internal series termination without calibration (25-Ω setting)	V_{CCIO} = 1.8 V	±30	±30	%
50-Ω R_S 1.8	Internal series termination with calibration (50-Ω setting)	V_{CCIO} = 1.8 V	±5	±10	%
	Internal series termination without calibration (50-Ω setting)	V_{CCIO} = 1.8 V	±30	±30	%
50-Ω R_T 1.8	Internal parallel termination with calibration (50-Ω setting)	V_{CCIO} = 1.8 V	±10	±15	%
50–Ω R_S 1.5	Internal series termination with calibration (50-Ω setting)	V_{CCIO} = 1.5 V	±8	±10	%
	Internal series termination without calibration (50-Ω setting)	V_{CCIO} = 1.5 V	±36	±36	%
50-Ω R_T 1.5	Internal parallel termination with calibration (50-Ω setting)	V_{CCIO} = 1.5 V	±10	±15	%
50–Ω R_S 1.2	Internal series termination with calibration (50-Ω setting)	V_{CCIO} = 1.2 V	±8	±10	%
	Internal series termination without calibration (50-Ω setting)	V_{CCIO} = 1.2 V	±50	±50	%
50-Ω R_T 1.2	Internal parallel termination with calibration (50-Ω setting)	V_{CCIO} = 1.2 V	±10	±15	%

Notes for Table 5–30:

(1) The resistance tolerances for calibrated SOCT and POCT are for the moment of calibration. If the temperature or voltage changes over time, the tolerance may also change.

(2) On-chip parallel termination with calibration is only supported for input pins.

Table 5–31. Series & Differential On-Chip Termination Specification for Left & Right I/O Banks

Symbol	Description	Conditions	Resistance Tolerance		
			Commercial Max	Industrial Max	Unit
25-Ω R_S 3.3/2.5	Internal series termination without calibration (25-Ω setting)	V_{CCIO} = 3.3/2.5 V	±30	±30	%
50-Ω R_S 3.3/2.5/1.8	Internal series termination without calibration (50-Ω setting)	V_{CCIO} = 3.3/2.5/1.8 V	±30	±30	%
50-Ω R_S 1.5	Internal series termination without calibration (50-Ω setting)	V_{CCIO} = 1.5 V	±36	±36	%
R_D	Internal differential termination for LVDS or HyperTransport technology (100-Ω setting)	V_{CCIO} = 2.5 V	±20	±25	%

Pin Capacitance

Table 5–32 shows the Stratix II device family pin capacitance.

Table 5–32. Stratix II Device Capacitance *Note (1)*

Symbol	Parameter	Typical	Unit
C_{IOTB}	Input capacitance on I/O pins in I/O banks 3, 4, 7, and 8.	5.0	pF
C_{IOLR}	Input capacitance on I/O pins in I/O banks 1, 2, 5, and 6, including high-speed differential receiver and transmitter pins.	6.1	pF
C_{CLKTB}	Input capacitance on top/bottom clock input pins: `CLK[4..7]` and `CLK[12..15]`.	6.0	pF
C_{CLKLR}	Input capacitance on left/right clock inputs: `CLK0`, `CLK2`, `CLK8`, `CLK10`.	6.1	pF
C_{CLKLR+}	Input capacitance on left/right clock inputs: `CLK1`, `CLK3`, `CLK9`, and `CLK11`.	3.3	pF
C_{OUTFB}	Input capacitance on dual-purpose clock output/feedback pins in PLL banks 9, 10, 11, and 12.	6.7	pF

Note to Table 5–32:

(1) Capacitance is sample-tested only. Capacitance is measured using time-domain reflections (TDR). Measurement accuracy is within ±0.5pF

Power Consumption

Altera® offers two ways to calculate power for a design: the Excel-based PowerPlay Early Power Estimator power calculator and the Quartus® II PowerPlay Power Analyzer feature.

The interactive Excel-based PowerPlay Early Power Estimator is typically used prior to designing the FPGA in order to get an estimate of device power. The Quartus II PowerPlay Power Analyzer provides better quality estimates based on the specifics of the design after place-and-route is complete. The Power Analyzer can apply a combination of user-entered, simulation-derived and estimated signal activities which, combined with detailed circuit models, can yield very accurate power estimates.

In both cases, these calculations should only be used as an estimation of power, not as a specification.

For more information about PowerPlay tools, refer to the *PowerPlay Early Power Estimator User Guide* and the *PowerPlay Early Power Estimator* and *PowerPlay Power Analyzer* chapters in volume 3 of the *Quartus II Handbook*.

The PowerPlay Early Power Estimator is available on the Altera web site at **www.altera.com**. See Table 5–4 on page 5–3 for typical I_{CC} standby specifications.

Timing Model

The DirectDrive™ technology and MultiTrack™ interconnect ensure predictable performance, accurate simulation, and accurate timing analysis across all Stratix II device densities and speed grades. This section describes and specifies the performance, internal timing, external timing, and PLL, high-speed I/O, external memory interface, and JTAG timing specifications.

All specifications are representative of worst-case supply voltage and junction temperature conditions.

The timing numbers listed in the tables of this section are extracted from the Quartus II software version 5.0 SP1.

Preliminary & Final Timing

Timing models can have either preliminary or final status. The Quartus II software issues an informational message during the design compilation if the timing models are preliminary. Table 5–33 shows the status of the Stratix II device timing models.

Preliminary status means the timing model is subject to change. Initially, timing numbers are created using simulation results, process data, and other known parameters. These tests are used to make the preliminary numbers as close to the actual timing parameters as possible.

Final timing numbers are based on actual device operation and testing. These numbers reflect the actual performance of the device under worst-case voltage and junction temperature conditions.

Table 5–33. Stratix II Device Timing Model Status

Device	Preliminary	Final
EP2S15		✓
EP2S30		✓
EP2S60		✓
EP2S90		✓
EP2S130		✓
EP2S180		✓

I/O Timing Measurement Methodology

Altera characterizes timing delays at the worst-case process, minimum voltage, and maximum temperature for input register setup time (t_{SU}) and hold time (t_H). The Quartus II software uses the following equations to calculate t_{SU} and t_H timing for Stratix II devices input signals.

t_{SU} = + data delay from input pin to input register
+ micro setup time of the input register
– clock delay from input pin to input register

t_H = – data delay from input pin to input register
+ micro hold time of the input register
+ clock delay from input pin to input register

Figure 5–3 shows the setup and hold timing diagram for input registers.

Figure 5–3. Input Register Setup & Hold Timing Diagram

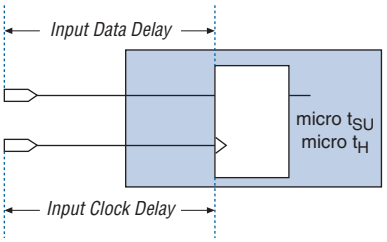

For output timing, different I/O standards require different baseline loading techniques for reporting timing delays. Altera characterizes timing delays with the required termination for each I/O standard and with 0 pF (except for PCI and PCI-X which use 10 pF) loading and the timing is specified up to the output pin of the FPGA device. The Quartus II software calculates the I/O timing for each I/O standard with a default baseline loading as specified by the I/O standards.

The following measurements are made during device characterization. Altera measures clock-to-output delays (t_{CO}) at worst-case process, minimum voltage, and maximum temperature (PVT) for default loading conditions shown in Table 5–34. Use the following equations to calculate clock pin to output pin timing for Stratix II devices.

t_{CO} from clock pin to I/O pin = delay from clock pad to I/O output register + IOE output register clock-to-output delay + delay from output register to output pin + I/O output delay

t_{xz}/t_{zx} from clock pin to I/O pin = delay from clock pad to I/O output register + IOE output register clock-to-output delay + delay from output register to output pin + I/O output delay + output enable pin delay

Simulation using IBIS models is required to determine the delays on the PCB traces in addition to the output pin delay timing reported by the Quartus II software and the timing model in the device handbook.

1. Simulate the output driver of choice into the generalized test setup, using values from Table 5–34.
2. Record the time to V_{MEAS}.
3. Simulate the output driver of choice into the actual PCB trace and load, using the appropriate IBIS model or capacitance value to represent the load.

4. Record the time to V_{MEAS}.

5. Compare the results of steps 2 and 4. The increase or decrease in delay should be added to or subtracted from the I/O Standard Output Adder delays to yield the actual worst-case propagation delay (clock-to-output) of the PCB trace.

The Quartus II software reports the timing with the conditions shown in Table 5–34 using the above equation. Figure 5–4 shows the model of the circuit that is represented by the output timing of the Quartus II software.

Figure 5–4. Output Delay Timing Reporting Setup Modeled by Quartus II

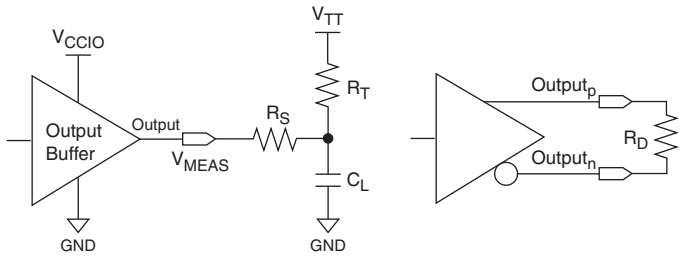

Notes to Figure 5–4:

(1) Output pin timing is reported at the output pin of the FPGA device. Additional delays for loading and board trace delay need to be accounted for with IBIS model simulations.

(2) V_{CCPD} is 3.085 V unless otherwise specified.

(3) V_{CCINT} is 1.12 V unless otherwise specified.

Figures 5–5 and 5–6 show the measurement setup for output disable and output enable timing.

Table 5–34. Output Timing Measurement Methodology for Output Pins *Notes (1), (2), (3)*

I/O Standard	Loading and Termination						Measurement Point
	R_S (Ω)	R_D (Ω)	R_T (Ω)	V_{CCIO} (V)	V_{TT} (V)	C_L (pF)	V_{MEAS} (V)
LVTTL *(4)*				3.135		0	1.5675
LVCMOS *(4)*				3.135		0	1.5675
2.5 V *(4)*				2.375		0	1.1875
1.8 V *(4)*				1.710		0	0.855
1.5 V *(4)*				1.425		0	0.7125
PCI *(5)*				2.970		10	1.485
PCI-X *(5)*				2.970		10	1.485
SSTL-2 Class I	25		50	2.325	1.123	0	1.1625
SSTL-2 Class II	25		25	2.325	1.123	0	1.1625
SSTL-18 Class I	25		50	1.660	0.790	0	0.83
SSTL-18 Class II	25		25	1.660	0.790	0	0.83
1.8-V HSTL Class I	50		50	1.660	0.790	0	0.83
1.8-V HSTL Class II	25		25	1.660	0.790	0	0.83
1.5-V HSTL Class I	50		50	1.375	0.648	0	0.6875
1.5-V HSTL Class II			25	1.375	0.648	0	0.6875
1.2-V HSTL with OCT	50			1.140		0	0.570
Differential SSTL-2 Class I	50		50	2.325	1.123	0	1.1625
Differential SSTL-2 Class II	25		25	2.325	1.123	0	1.1625
Differential SSTL-18 Class I	50		50	1.660	0.790	0	0.83
Differential SSTL-18 Class II	25		25	1.660	0.790	0	0.83
1.5-V Differential HSTL Class I	50		50	1.375	0.648	0	0.6875
1.5-V Differential HSTL Class II			25	1.375	0.648	0	0.6875
1.8-V Differential HSTL Class I	50		50	1.660	0.790	0	0.83
1.8-V Differential HSTL Class II	25		25	1.660	0.790	0	0.83
LVDS		100		2.325		0	1.1625
HyperTransport		100		2.325		0	1.1625
LVPECL		100		3.135		0	1.5675

Notes to Table 5–34:

(1) Input measurement point at internal node is $0.5 \times V_{CCINT}$.

(2) Output measuring point for V_{MEAS} at buffer output is $0.5 \times V_{CCIO}$.

(3) Input stimulus edge rate is 0 to V_{CC} in 0.2 ns (internal signal) from the driver preceding the I/O buffer.

(4) Less than 50-mV ripple on V_{CCIO} and V_{CCPD}, V_{CCINT} = 1.15 V with less than 30-mV ripple

(5) V_{CCPD} = 2.97 V, less than 50-mV ripple on V_{CCIO} and V_{CCPD}, V_{CCINT} = 1.15 V

Figure 5–5. Measurement Setup for t_{xz} *Note (1)*

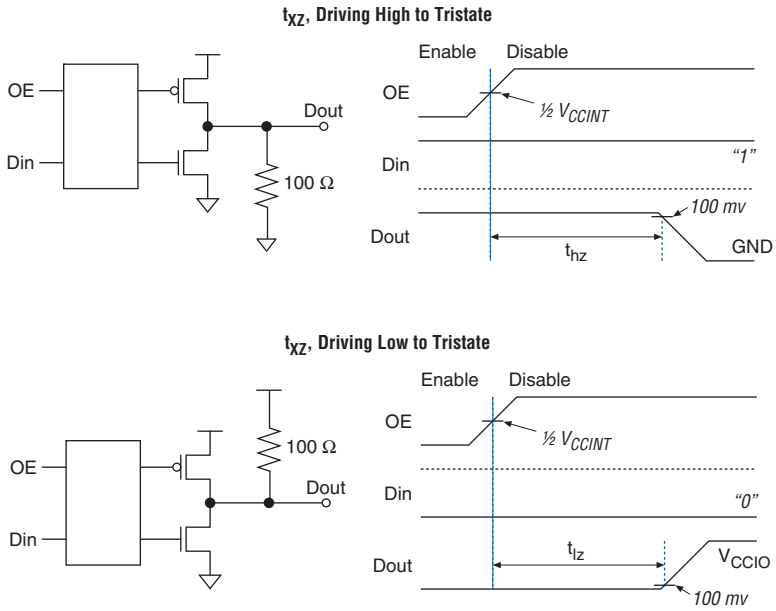

Note to Figure 5–5:

(1) V_{CCINT} is 1.12 V for this measurement.

Figure 5–6. Measurement Setup for t_{zx}

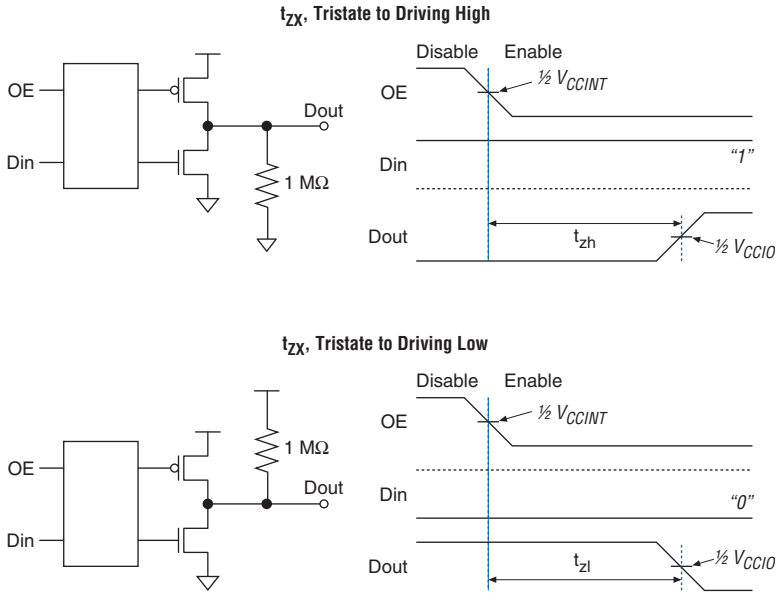

Table 5–35 specifies the input timing measurement setup.

Table 5–35. Timing Measurement Methodology for Input Pins (Part 1 of 2) *Notes (1)–(4)*

I/O Standard	Measurement Conditions			Measurement Point
	V_{CCIO} (V)	V_{REF} (V)	Edge Rate (ns)	V_{MEAS} (V)
LVTTL *(5)*	3.135		3.135	1.5675
LVCMOS *(5)*	3.135		3.135	1.5675
2.5 V *(5)*	2.375		2.375	1.1875
1.8 V *(5)*	1.710		1.710	0.855
1.5 V *(5)*	1.425		1.425	0.7125
PCI *(6)*	2.970		2.970	1.485
PCI-X *(6)*	2.970		2.970	1.485
SSTL-2 Class I	2.325	1.163	2.325	1.1625
SSTL-2 Class II	2.325	1.163	2.325	1.1625
SSTL-18 Class I	1.660	0.830	1.660	0.83
SSTL-18 Class II	1.660	0.830	1.660	0.83
1.8-V HSTL Class I	1.660	0.830	1.660	0.83

Table 5–35. Timing Measurement Methodology for Input Pins (Part 2 of 2) *Notes (1)–(4)*

I/O Standard	Measurement Conditions			Measurement Point
	V_{CCIO} (V)	V_{REF} (V)	Edge Rate (ns)	V_{MEAS} (V)
1.8-V HSTL Class II	1.660	0.830	1.660	0.83
1.5-V HSTL Class I	1.375	0.688	1.375	0.6875
1.5-V HSTL Class II	1.375	0.688	1.375	0.6875
1.2-V HSTL with OCT	1.140	0.570	1.140	0.570
Differential SSTL-2 Class I	2.325	1.163	2.325	1.1625
Differential SSTL-2 Class II	2.325	1.163	2.325	1.1625
Differential SSTL-18 Class I	1.660	0.830	1.660	0.83
Differential SSTL-18 Class II	1.660	0.830	1.660	0.83
1.5-V Differential HSTL Class I	1.375	0.688	1.375	0.6875
1.5-V Differential HSTL Class II	1.375	0.688	1.375	0.6875
1.8-V Differential HSTL Class I	1.660	0.830	1.660	0.83
1.8-V Differential HSTL Class II	1.660	0.830	1.660	0.83
LVDS	2.325		0.100	1.1625
HyperTransport	2.325		0.400	1.1625
LVPECL	3.135		0.100	1.5675

Notes to Table 5–35:

(1) Input buffer sees no load at buffer input.
(2) Input measuring point at buffer input is $0.5 \times V_{CCIO}$.
(3) Output measuring point is $0.5 \times V_{CC}$ at internal node.
(4) Input edge rate is 1 V/ns.
(5) Less than 50-mV ripple on V_{CCIO} and V_{CCPD}, V_{CCINT} = 1.15 V with less than 30-mV ripple
(6) V_{CCPD} = 2.97 V, less than 50-mV ripple on V_{CCIO} and V_{CCPD}, V_{CCINT} = 1.15 V

Performance

Table 5–36 shows Stratix II performance for some common designs. All performance values were obtained with the Quartus II software compilation of library of parameterized modules (LPM), or MegaCore® functions for the finite impulse response (FIR) and fast Fourier transform (FFT) designs.

The performance numbers in Table 5–36 are extracted from the Quartus II software version 5.1 SP1.

Table 5–36. Stratix II Performance Notes (Part 1 of 6) *Note (1)*

Applications		Resources Used			Performance				
		ALUTs	TriMatrix Memory Blocks	DSP Blocks	-3 Speed Grade *(2)*	-3 Speed Grade *(3)*	-4 Speed Grade	-5 Speed Grade	Unit
LE	16-to-1 multiplexer *(4)*	21	0	0	654.87	625.0	523.83	460.4	MHz
	32-to-1 multiplexer *(4)*	38	0	0	519.21	473.26	464.25	384.17	MHz
	16-bit counter	16	0	0	566.57	538.79	489.23	421.05	MHz
	64-bit counter	64	0	0	244.31	232.07	209.11	181.38	MHz
TriMatrix Memory M512 block	Simple dual-port RAM 32 × 18 bit	0	1	0	500.00	476.19	434.02	373.13	MHz
	FIFO 32 x 18 bit	22	1	0	500.00	476.19	434.78	373.13	MHz
TriMatrix Memory M4K block	Simple dual-port RAM 128 x 36 bit *(8)*	0	1	0	540.54	515.46	469.48	401.60	MHz
	True dual-port RAM 128 × 18 bit *(8)*	0	1	0	540.54	515.46	469.48	401.60	MHz
	FIFO 128 × 36 bit	22	1	0	530.22	499.00	469.48	401.60	MHz
	Simple dual-port RAM 128 × 36 bit *(9)*	0	1	0	475.28	453.30	413.22	354.10	MHz
	True dual-port RAM 128 × 18 bit *(9)*	0	1	0	475.28	453.30	413.22	354.10	MHz

Table 5–36. Stratix II Performance Notes (Part 2 of 6) *Note (1)*

Applications		Resources Used			Performance				
		ALUTs	TriMatrix Memory Blocks	DSP Blocks	-3 Speed Grade *(2)*	-3 Speed Grade *(3)*	-4 Speed Grade	-5 Speed Grade	Unit
TriMatrix Memory M-RAM block	Single port RAM 4K × 144 bit	0	1	0	349.65	333.33	303.95	261.09	MHz
	Simple dual-port RAM 4K × 144 bit	0	1	0	420.16	400.00	364.96	313.47	MHz
	True dual-port RAM 4K × 144 bit	0	1	0	349.65	333.33	303.95	261.09	MHz
	Single port RAM 8K × 72 bit	0	1	0	354.60	337.83	307.69	263.85	MHz
	Simple dual-port RAM 8K × 72 bit	0	1	0	420.16	400.00	364.96	313.47	MHz
	True dual-port RAM 8K × 72 bit	0	1	0	349.65	333.33	303.95	261.09	MHz
	Single port RAM 16K × 36 bit	0	1	0	364.96	347.22	317.46	271.73	MHz
	Simple dual-port RAM 16K × 36 bit	0	1	0	420.16	400.00	364.96	313.47	MHz
	True dual-port RAM 16K × 36 bit	0	1	0	359.71	342.46	313.47	268.09	MHz
	Single port RAM 32K × 18 bit	0	1	0	364.96	347.22	317.46	271.73	MHz
	Simple dual-port RAM 32K × 18 bit	0	1	0	420.16	400.0	364.96	313.47	MHz
	True dual-port RAM 32K × 18 bit	0	1	0	359.71	342.46	313.47	268.09	MHz
	Single port RAM 64K × 9 bit	0	1	0	364.96	347.22	317.46	271.73	MHz
	Simple dual-port RAM 64K × 9 bit	0	1	0	420.16	400.0	364.96	313.47	MHz
	True dual-port RAM 64K × 9 bit	0	1	0	359.71	342.46	313.47	268.09	MHz

Table 5–36. Stratix II Performance Notes (Part 3 of 6) *Note (1)*

Applications		Resources Used			Performance				
		ALUTs	TriMatrix Memory Blocks	DSP Blocks	-3 Speed Grade *(2)*	-3 Speed Grade *(3)*	-4 Speed Grade	-5 Speed Grade	Unit
DSP block	9 × 9-bit multiplier *(5)*	0	0	1	430.29	409.16	373.13	320.10	MHz
	18 × 18-bit multiplier *(5)*	0	0	1	410.17	390.01	356.12	305.06	MHz
	18 × 18-bit multiplier *(7)*	0	0	1	450.04	428.08	391.23	335.12	MHz
	36 × 36-bit multiplier *(5)*	0	0	1	250.00	238.15	217.48	186.60	MHz
	36 × 36-bit multiplier *(6)*	0	0	1	410.17	390.01	356.12	305.06	MHz
	18-bit, four-tap FIR filter	0	0	1	410.17	390.01	356.12	305.06	MHz
Larger designs	8-bit,16-tap parallel FIR filter	58	0	4	259.06	240.61	217.15	185.01	MHz
	8-bit, 1024-point, streaming, three multipliers and five adders FFT function	2976	22	9	398.72	364.03	355.23	306.37	MHz
	8-bit, 1024-point, streaming, four multipliers and two adders FFT function	2781	22	12	398.56	409.16	347.22	311.13	MHz
	8-bit, 1024-point, single output, one parallel FFT engine, burst, three multipliers and five adders FFT function	984	5	3	425.17	365.76	346.98	292.39	MHz
	8-bit, 1024-point, single output, one parallel FFT engine, burst, four multipliers and two adders FFT function	919	5	4	427.53	378.78	357.14	307.59	MHz

Table 5–36. Stratix II Performance Notes (Part 4 of 6) *Note (1)*

Applications		Resources Used			Performance				
		ALUTs	TriMatrix Memory Blocks	DSP Blocks	-3 Speed Grade *(2)*	-3 Speed Grade *(3)*	-4 Speed Grade	-5 Speed Grade	Unit
Larger designs	8-bit, 1024-point, single output, two parallel FFT engines, burst, three multiplier and five adders FFT function	1725	10	6	430.29	401.92	373.13	319.08	MHz
	8-bit, 1024-point, single output, two parallel FFT engines, burst, four multipliers and two adders FFT function	1594	10	8	422.65	407.33	373.13	329.10	MHz
	8-bit, 1024-point, quadrant output, one parallel FFT engine, burst, three multipliers and five adders FFT function	2361	10	9	315.45	342.81	325.73	284.25	MHz
	8-bit, 1024-point, quadrant output, one parallel FFT engine, burst, four multipliers and two adders FFT function	2165	10	12	373.13	369.54	317.96	256.14	MHz
	8-bit, 1024-point, quadrant output, two parallel FFT engines, burst, three multipliers and five adders FFT function	3996	14	18	378.50	367.10	332.33	288.68	MHz
	8-bit, 1024-point, quadrant output, two parallel FFT engines, burst, four multipliers and two adders FFT function	3604	14	24	391.38	361.14	340.25	280.89	MHz

Table 5–36. Stratix II Performance Notes (Part 5 of 6) *Note (1)*

Applications		Resources Used			Performance				
		ALUTs	TriMatrix Memory Blocks	DSP Blocks	-3 Speed Grade *(2)*	-3 Speed Grade *(3)*	-4 Speed Grade	-5 Speed Grade	Unit
Larger designs	8-bit, 1024-point, quadrant output, four parallel FFT engines, burst, three multipliers and five adders FFT function	6850	28	36	334.11	345.66	308.54	276.31	MHz
	8-bit, 1024-point, quadrant output, four parallel FFT engines, burst, four multipliers two adders FFT function	6067	28	48	367.91	349.04	327.33	268.24	MHz
	8-bit, 1024-point, quadrant output, one parallel FFT engine, buffered burst, three multipliers and adders FFT function	2730	18	9	387.44	388.34	364.56	306.84	MHz
	8-bit, 1024-point, quadrant output, one parallel FFT engine, buffered burst, four multipliers and two adders FFT function	2534	18	12	419.28	369.66	364.96	307.88	MHz
	8-bit, 1024-point, quadrant output, two parallel FFT engines, buffered burst, three multipliers five adders FFT function	4358	30	18	396.51	378.07	340.13	291.29	MHz
	8-bit, 1024-point, quadrant output, two parallel FFT engines, buffered burst four multipliers and two adders FFT function	3966	30	24	389.71	398.08	356.53	280.74	MHz

Table 5–36. Stratix II Performance Notes (Part 6 of 6) *Note (1)*

Applications		Resources Used			Performance				
		ALUTs	TriMatrix Memory Blocks	DSP Blocks	-3 Speed Grade (2)	-3 Speed Grade (3)	-4 Speed Grade	-5 Speed Grade	Unit
Larger designs	8-bit, 1024-point, quadrant output, four parallel FFT engines, buffered burst, three multipliers five adders FFT function	7385	60	36	359.58	352.98	312.01	278.00	MHz
	8-bit, 1024-point, quadrant output, four parallel FFT engines, buffered burst, four multipliers and two adders FFT function	6601	60	48	371.88	355.74	327.86	277.62	MHz

Notes for Table 5–36:

(1) These design performance numbers were obtained using the Quartus II software version 5.0 SP1.
(2) These numbers apply to -3 speed grade EP2S15, EP2S30, EP2S60, and EP2S90 devices.
(3) These numbers apply to -3 speed grade EP2S130 and EP2S180 devices.
(4) This application uses registered inputs and outputs.
(5) This application uses registered multiplier input and output stages within the DSP block.
(6) This application uses registered multiplier input, pipeline, and output stages within the DSP block.
(7) This application uses registered multiplier input with output of the multiplier stage feeding the accumulator or subtractor within the DSP block.
(8) This application uses the same clock source that is globally routed and connected to ports A and B.
(9) This application uses locally routed clocks or differently sourced clocks for ports A and B.

Internal Timing Parameters

See Tables 5–37 through 5–42 for internal timing parameters.

Table 5–37. LE_FF Internal Timing Microparameters

Symbol	Parameter	-3 Speed Grade (1)		-3 Speed Grade (2)		-4 Speed Grade		-5 Speed Grade		Unit
		Min (3)	Max	Min (3)	Max	Min (4)	Max	Min (3)	Max	
t_{SU}	LE register setup time before clock	90		95		104 104		121		ps
t_{H}	LE register hold time after clock	149		157		172 172		200		ps
t_{CO}	LE register clock-to-output delay	62	94	62	99	59 62	109	62	127	ps
t_{CLR}	Minimum clear pulse width	204		214		234 234		273		ps
t_{PRE}	Minimum preset pulse width	204		214		234 234		273		ps
t_{CLKL}	Minimum clock low time	612		642		703 703		820		ps
t_{CLKH}	Minimum clock high time	612		642		703 703		820		ps
t_{LUT}		162	378	162	397	162 170	435	162	507	ps
t_{ADDER}		354	619	354	650	354 372	712	354	829	ps

Notes to Table 5–37:

(1) These numbers apply to -3 speed grade EP2S15, EP2S30, EP2S60, and EP2S90 devices.

(2) These numbers apply to -3 speed grade EP2S130 and EP2S180 devices.

(3) For the -3 and -5 speed grades, the minimum timing is for the commercial temperature grade. Only -4 speed grade devices offer the industrial temperature grade.

(4) For the -4 speed grade, the first number is the minimum timing parameter for industrial devices. The second number is the minimum timing parameter for commercial devices.

Table 5–38. IOE Internal Timing Microparameters

Symbol	Parameter	-3 Speed Grade *(1)*		-3 Speed Grade *(2)*		-4 Speed Grade		-5 Speed Grade		Unit
		Min *(3)*	Max	Min *(3)*	Max	Min *(4)*	Max	Min *(3)*	Max	
t_{SU}	IOE input and output register setup time before clock	122		128		140 140		163		ps
t_{H}	IOE input and output register hold time after clock	72		75		82 82		96		ps
t_{CO}	IOE input and output register clock-to-output delay	101	169	101	177	97 101	194	101	226	ps
$t_{PIN2COMBOUT_R}$	Row input pin to IOE combinational output	410	760	410	798	391 410	873	410	1,018	ps
$t_{PIN2COMBOUT_C}$	Column input pin to IOE combinational output	428	787	428	825	408 428	904	428	1,054	ps
$t_{COMBIN2PIN_R}$	Row IOE data input to combinational output pin	1,101	2,026	1,101	2,127	1,049 1,101	2,329	1,101	2,439	ps
$t_{COMBIN2PIN_C}$	Column IOE data input to combinational output pin	991	1,854	991	1,946	944 991	2,131	991	2,246	ps
t_{CLR}	Minimum clear pulse width	200		210		229 229		268		ps
t_{PRE}	Minimum preset pulse width	200		210		229 229		268		ps
t_{CLKL}	Minimum clock low time	600		630		690 690		804		ps
t_{CLKH}	Minimum clock high time	600		630		690 690		804		ps

Notes to Table 5–38:

(1) These numbers apply to -3 speed grade EP2S15, EP2S30, EP2S60, and EP2S90 devices.

(2) These numbers apply to -3 speed grade EP2S130 and EP2S180 devices.

(3) For the -3 and -5 speed grades, the minimum timing is for the commercial temperature grade. Only -4 speed grade devices offer the industrial temperature grade.

(4) For the -4 speed grade, the first number is the minimum timing parameter for industrial devices. The second number is the minimum timing parameter for commercial devices.

Table 5–39. DSP Block Internal Timing Microparameters (Part 1 of 2)

Symbol	Parameter	-3 Speed Grade *(1)*		-3 Speed Grade *(2)*		-4 Speed Grade		-5 Speed Grade		Unit
		Min *(3)*	Max	Min *(3)*	Max	Min *(4)*	Max	Min *(3)*	Max	
t_{SU}	Input, pipeline, and output register setup time before clock	50		52		57 57		67		ps
t_{H}	Input, pipeline, and output register hold time after clock	180		189		206 206		241		ps
t_{CO}	Input, pipeline, and output register clock-to-output delay	0	0	0	0	0 0	0	0	0	ps
$t_{INREG2PIPE9}$	Input register to DSP block pipeline register in 9 × 9-bit mode	1,312	2,030	1,312	2,030	1,250 1,312	2,334	1,312	2,720	ps
$t_{INREG2PIPE18}$	Input register to DSP block pipeline register in 18 × 18-bit mode	1,302	2,010	1,302	2,110	1,240 1,302	2,311	1,302	2,693	ps
$t_{INREG2PIPE36}$	Input register to DSP block pipeline register in 36 × 36-bit mode	1,302	2,010	1,302	2,110	1,240 1,302	2,311	1,302	2,693	ps
$t_{PIPE2OUTREG2ADD}$	DSP block pipeline register to output register delay in two-multipliers adder mode	924	1,450	924	1,522	880 924	1,667	924	1,943	ps
$t_{PIPE2OUTREG4ADD}$	DSP block pipeline register to output register delay in four-multipliers adder mode	1,134	1,850	1,134	1,942	1,080 1,134	2,127	1,134	2,479	ps
t_{PD9}	Combinational input to output delay for 9 × 9	2,100	2,880	2,100	3,024	2,000 2,100	3,312	2,100	3,859	ps
t_{PD18}	Combinational input to output delay for 18 × 18	2,110	2,990	2,110	3,139	2,010 2,110	3,438	2,110	4,006	ps
t_{PD36}	Combinational input to output delay for 36 × 36	2,939	4,450	2,939	4,672	2,800 2,939	5,117	2,939	5,962	ps
t_{CLR}	Minimum clear pulse width	2,212		2,322		2,543 2,543		2,964		ps

Table 5–39. DSP Block Internal Timing Microparameters (Part 2 of 2)

Symbol	Parameter	-3 Speed Grade (1)		-3 Speed Grade (2)		-4 Speed Grade		-5 Speed Grade		Unit
		Min (3)	Max	Min (3)	Max	Min (4)	Max	Min (3)	Max	
t_{CLKL}	Minimum clock low time	1,190		1,249		1,368 1,368		1,594		ps
t_{CLKH}	Minimum clock high time	1,190		1,249		1,368 1,368		1,594		ps

Notes to Table 5–39:

(1) These numbers apply to -3 speed grade EP2S15, EP2S30, EP2S60, and EP2S90 devices.

(2) These numbers apply to -3 speed grade EP2S130 and EP2S180 devices.

(3) For the -3 and -5 speed grades, the minimum timing is for the commercial temperature grade. Only -4 speed grade devices offer the industrial temperature grade.

(4) For the -4 speed grade, the first number is the minimum timing parameter for industrial devices. The second number is the minimum timing parameter for commercial devices.

Table 5–40. M512 Block Internal Timing Microparameters (Part 1 of 2) *Note (1)*

Symbol	Parameter	-3 Speed Grade (2)		-3 Speed Grade (3)		-4 Speed Grade		-5 Speed Grade		Unit
		Min (4)	Max	Min (4)	Max	Min (5)	Max	Min (4)	Max	
t_{M512RC}	Synchronous read cycle time	2,089	2,318	2,089	2.433	1,989 2,089	2,664	2,089	3,104	ps
$t_{M512WERESU}$	Write or read enable setup time before clock	22		23		25 25		29		ps
$t_{M512WEREH}$	Write or read enable hold time after clock	203		213		233 233		272		ps
$t_{M512DATASU}$	Data setup time before clock	22		23		25 25		29		ps
$t_{M512DATAH}$	Data hold time after clock	203		213		233 233		272		ps
$t_{M512WADDRSU}$	Write address setup time before clock	22		23		25 25		29		ps
$t_{M512WADDRH}$	Write address hold time after clock	203		213		233 233		272		ps
$t_{M512RADDRSU}$	Read address setup time before clock	22		23		25 25		29		ps
$t_{M512RADDRH}$	Read address hold time after clock	203		213		233 233		272		ps

Table 5–40. M512 Block Internal Timing Microparameters (Part 2 of 2) *Note (1)*

Symbol	Parameter	-3 Speed Grade (2)		-3 Speed Grade (3)		-4 Speed Grade		-5 Speed Grade		Unit
		Min (4)	Max	Min (4)	Max	Min (5)	Max	Min (4)	Max	
$t_{M512DATACO1}$	Clock-to-output delay when using output registers	298	478	298	501	284 298	548	298	640	ps
$t_{M512DATACO2}$	Clock-to-output delay without output registers	2,102	2,345	2,102	2,461	2,003 2,102	2,695	2,102	3,141	ps
$t_{M512CLKL}$	Minimum clock low time	1,315		1,380		1,512 1,512		1,762		ps
$t_{M512CLKH}$	Minimum clock high time	1,315		1,380		1,512 1,512		1,762		ps
$t_{M512CLR}$	Minimum clear pulse width	144		151		165 165		192		ps

Notes to Table 5–40:

(1) F_{MAX} of M512 block obtained using the Quartus II software does not necessarily equal to 1/TM512RC.
(2) These numbers apply to -3 speed grade EP2S15, EP2S30, EP2S60, and EP2S90 devices.
(3) These numbers apply to -3 speed grade EP2S130 and EP2S180 devices.
(4) For the -3 and -5 speed grades, the minimum timing is for the commercial temperature grade. Only -4 speed grade devices offer the industrial temperature grade.
(5) For the -4 speed grade, the first number is the minimum timing parameter for industrial devices. The second number is the minimum timing parameter for commercial devices.

Table 5–41. M4K Block Internal Timing Microparameters (Part 1 of 2) *Note (1)*

Symbol	Parameter	-3 Speed Grade (2)		-3 Speed Grade (3)		-4 Speed Grade		-5 Speed Grade		Unit
		Min (4)	Max	Min (4)	Max	Min (5)	Max	Min (4)	Max	
t_{M4KRC}	Synchronous read cycle time	1,462	2,240	1,462	2,351	1,393 1,462	2,575	1,462	3,000	ps
$t_{M4KWERESU}$	Write or read enable setup time before clock	22		23		25 25		29		ps
$t_{M4KWEREH}$	Write or read enable hold time after clock	203		213		233 233		272		ps
$t_{M4KBESU}$	Byte enable setup time before clock	22		23		25 25		29		ps
t_{M4KBEH}	Byte enable hold time after clock	203		213		233 233		272		ps

Table 5–41. M4K Block Internal Timing Microparameters (Part 2 of 2) *Note (1)*

Symbol	Parameter	-3 Speed Grade (2)		-3 Speed Grade (3)		-4 Speed Grade		-5 Speed Grade		Unit
		Min (4)	Max	Min (4)	Max	Min (5)	Max	Min (4)	Max	
$t_{M4KDATAASU}$	A port data setup time before clock	22		23		25 25		29		ps
$t_{M4KDATAAH}$	A port data hold time after clock	203		213		233 233		272		ps
$t_{M4KADDRASU}$	A port address setup time before clock	22		23		25 25		29		ps
$t_{M4KADDRAH}$	A port address hold time after clock	203		213		233 233		272		ps
$t_{M4KDATABSU}$	B port data setup time before clock	22		23		25 25		29		ps
$t_{M4KDATABH}$	B port data hold time after clock	203		213		233 233		272		ps
$t_{M4KRADDRBSU}$	B port address setup time before clock	22		23		25 25		29		ps
$t_{M4KRADDRBH}$	B port address hold time after clock	203		213		233 233		272		ps
$t_{M4KDATACO1}$	Clock-to-output delay when using output registers	334	524	334	549	319 334	601	334	701	ps
$t_{M4KDATACO2}$ (6)	Clock-to-output delay without output registers	1,616	2,453	1,616	2,574	1,540 1,616	2,820	1,616	3,286	ps
$t_{M4KCLKH}$	Minimum clock high time	1,250		1,312		1,437 1,437		1,675		ps
$t_{M4KCLKL}$	Minimum clock low time	1,250		1,312		1,437 1,437		1,675		ps
t_{M4KCLR}	Minimum clear pulse width	144		151		165 165		192		ps

Notes to Table 5–41:

(1) F_{MAX} of M4K Block obtained using the Quartus II software does not necessarily equal to 1/TM4KRC.

(2) These numbers apply to -3 speed grade EP2S15, EP2S30, EP2S60, and EP2S90 devices.

(3) These numbers apply to -3 speed grade EP2S130 and EP2S180 devices.

(4) For the -3 and -5 speed grades, the minimum timing is for the commercial temperature grade. Only -4 speed grade devices offer the industrial temperature grade.

(5) For the -4 speed grade, the first number is the minimum timing parameter for industrial devices. The second number is the minimum timing parameter for commercial devices.

(6) Numbers apply to unpacked memory modes, true dual-port memory modes, and simple dual-port memory modes that use locally routed or non-identical sources for the A and B port registers.

Table 5–42. M-RAM Block Internal Timing Microparameters (Part 1 of 2) *Note (1)*

Symbol	Parameter	-3 Speed Grade *(2)*		-3 Speed Grade *(3)*		-4 Speed Grade		-5 Speed Grade		Unit
		Min *(4)*	Max	Min *(4)*	Max	Min *(5)*	Max	Min *(4)*	Max	
t_{MEGARC}	Synchronous read cycle time	1,866	2,774	1,866	2,911	1,777 1,866	3,189	1,777 1,866	3,716	ps
$t_{MEGAWERESU}$	Write or read enable setup time before clock	144		151		165 165		192		ps
$t_{MEGAWEREH}$	Write or read enable hold time after clock	39		40		44 44		52		ps
$t_{MEGABESU}$	Byte enable setup time before clock	50		52		57 57		67		ps
$t_{MEGABEH}$	Byte enable hold time after clock	39		40		44 44		52		ps
$t_{MEGADATAASU}$	A port data setup time before clock	50		52		57 57		67		ps
$t_{MEGADATAAH}$	A port data hold time after clock	243		255		279 279		325		ps
$t_{MEGAADDRASU}$	A port address setup time before clock	589		618		677 677		789		ps
$t_{MEGAADDRAH}$	A port address hold time after clock	241		253		277 277		322		ps
$t_{MEGADATABSU}$	B port setup time before clock	50		52		57 57		67		ps
$t_{MEGADATABH}$	B port hold time after clock	243		255		279 279		325		ps
$t_{MEGAADDRBSU}$	B port address setup time before clock	589		618		677 677		789		ps
$t_{MEGAADDRBH}$	B port address hold time after clock	241		253		277 277		322		ps
$t_{MEGADATACO1}$	Clock-to-output delay when using output registers	480	715	480	749	457 480	821	480	957	ps
$t_{MEGADATACO2}$	Clock-to-output delay without output registers	1,950	2,899	1,950	3,042	1,857 1,950	3,332	1,950	3,884	ps
$t_{MEGACLKL}$	Minimum clock low time	1,250		1,312		1,437 1,437		1,675		ps

Table 5–42. M-RAM Block Internal Timing Microparameters (Part 2 of 2) *Note (1)*

Symbol	Parameter	-3 Speed Grade *(2)*		-3 Speed Grade *(3)*		-4 Speed Grade		-5 Speed Grade		Unit
		Min *(4)*	Max	Min *(4)*	Max	Min *(5)*	Max	Min *(4)*	Max	
$t_{MEGACLKH}$	Minimum clock high time	1,250		1,312		1,437 1,437		1,675		ps
$t_{MEGACLR}$	Minimum clear pulse width	144		151		165 165		192		ps

Notes to Table 5–42:

(1) F_{MAX} of M-RAM Block obtained using the Quartus II software does not necessarily equal to 1/TMEGARC.

(2) These numbers apply to -3 speed grade EP2S15, EP2S30, EP2S60, and EP2S90 devices.

(3) These numbers apply to -3 speed grade EP2S130 and EP2S180 devices.

(4) For the -3 and -5 speed grades, the minimum timing is for the commercial temperature grade. Only -4 speed grade devices offer the industrial temperature grade.

(5) For the -4 speed grade, the first number is the minimum timing parameter for industrial devices. The second number is the minimum timing parameter for commercial devices.

Stratix II Clock Timing Parameters

See Tables 5–43 through 5–67 for Stratix II clock timing parameters.

Table 5–43. Stratix II Clock Timing Parameters

Symbol	Parameter
t_{CIN}	Delay from clock pad to I/O input register
t_{COUT}	Delay from clock pad to I/O output register
t_{PLLCIN}	Delay from PLL `inclk` pad to I/O input register
$t_{PLLCOUT}$	Delay from PLL `inclk` pad to I/O output register

EP2S15 Clock Timing Parameters

Tables 5–44 though 5–47 show the maximum clock timing parameters for EP2S15 devices.

Table 5–44. EP2S15 Column Pins Regional Clock Timing Parameters

Parameter	Minimum Timing		-3 Speed Grade	-4 Speed Grade	-5 Speed Grade	Unit
	Industrial	Commercial				
t_{CIN}	1.445	1.512	2.487	2.848	3.309	ns
t_{COUT}	1.288	1.347	2.245	2.570	2.985	ns
t_{PLLCIN}	0.104	0.102	0.336	0.373	0.424	ns
$t_{PLLCOUT}$	-0.053	-0.063	0.094	0.095	0.1	ns

Table 5–45. EP2S15 Column Pins Global Clock Timing Parameters

Parameter	Minimum Timing		-3 Speed Grade	-4 Speed Grade	-5 Speed Grade	Unit
	Industrial	Commercial				
t_{CIN}	1.419	1.487	2.456	2.813	3.273	ns
t_{COUT}	1.262	1.322	2.214	2.535	2.949	ns
t_{PLLCIN}	0.094	0.092	0.326	0.363	0.414	ns
$t_{PLLCOUT}$	-0.063	-0.073	0.084	0.085	0.09	ns

Table 5–46. EP2S15 Row Pins Regional Clock Timing Parameters

Parameter	Minimum Timing		-3 Speed Grade	-4 Speed Grade	-5 Speed Grade	Unit
	Industrial	Commercial				
t_{CIN}	1.232	1.288	2.144	2.454	2.848	ns
t_{COUT}	1.237	1.293	2.140	2.450	2.843	ns
t_{PLLCIN}	-0.109	-0.122	-0.007	-0.021	-0.037	ns
$t_{PLLCOUT}$	-0.104	-0.117	-0.011	-0.025	-0.042	ns

Table 5–47. EP2S15 Row Pins Global Clock Timing Parameters

Parameter	Minimum Timing		-3 Speed Grade	-4 Speed Grade	-5 Speed Grade	Unit
	Industrial	Commercial				
t_{CIN}	1.206	1.262	2.113	2.422	2.815	ns
t_{COUT}	1.211	1.267	2.109	2.418	2.810	ns
t_{PLLCIN}	-0.125	-0.138	-0.023	-0.038	-0.056	ns
$t_{PLLCOUT}$	-0.12	-0.133	-0.027	-0.042	-0.061	ns

EP2S30 Clock Timing Parameters

Tables 5–48 through 5–51 show the maximum clock timing parameters for EP2S30 devices.

Table 5–48. EP2S30 Column Pins Regional Clock Timing Parameters

Parameter	Minimum Timing		-3 Speed Grade	-4 Speed Grade	-5 Speed Grade	Unit
	Industrial	Commercial				
t_{CIN}	1.553	1.627	2.639	3.025	3.509	ns
t_{COUT}	1.396	1.462	2.397	2.747	3.185	ns
t_{PLLCIN}	0.114	0.113	0.225	0.248	0.28	ns
$t_{PLLCOUT}$	-0.043	-0.052	-0.017	-0.03	-0.044	ns

Table 5–49. EP2S30 Column Pins Global Clock Timing Parameters

Parameter	Minimum Timing		-3 Speed Grade	-4 Speed Grade	-5 Speed Grade	Unit
	Industrial	Commercial				
t_{CIN}	1.539	1.613	2.622	3.008	3.501	ns
t_{COUT}	1.382	1.448	2.380	2.730	3.177	ns
t_{PLLCIN}	0.101	0.098	0.209	0.229	0.267	ns
$t_{PLLCOUT}$	-0.056	-0.067	-0.033	-0.049	-0.057	ns

Table 5–50. EP2S30 Row Pins Regional Clock Timing Parameters

Parameter	Minimum Timing		-3 Speed Grade	-4 Speed Grade	-5 Speed Grade	Unit
	Industrial	Commercial				
t_{CIN}	1.304	1.184	1.966	2.251	2.616	ns
t_{COUT}	1.309	1.189	1.962	2.247	2.611	ns
t_{PLLCIN}	-0.135	–0.158	–0.208	–0.254	–0.302	ns
$t_{PLLCOUT}$	-0.13	–0.153	–0.212	–0.258	–0.307	ns

Table 5–51. EP2S30 Row Pins Global Clock Timing Parameters

Parameter	Minimum Timing		-3 Speed Grade	-4 Speed Grade	-5 Speed Grade	Unit
	Industrial	Commercial				
t_{CIN}	1.289	1.352	2.238	2.567	2.990	ns
t_{COUT}	1.294	1.357	2.234	2.563	2.985	ns
t_{PLLCIN}	-0.14	-0.154	-0.169	-0.205	-0.254	ns
$t_{PLLCOUT}$	-0.135	-0.149	-0.173	-0.209	-0.259	ns

EP2S60 Clock Timing Parameters

Tables 5–52 through 5–55 show the maximum clock timing parameters for EP2S60 devices.

Table 5–52. EP2S60 Column Pins Regional Clock Timing Parameters

Parameter	Minimum Timing		-3 Speed Grade	-4 Speed Grade	-5 Speed Grade	Unit
	Industrial	Commercial				
t_{CIN}	1.681	1.762	2.945	3.381	3.931	ns
t_{COUT}	1.524	1.597	2.703	3.103	3.607	ns
t_{PLLCIN}	0.066	0.064	0.279	0.311	0.348	ns
$t_{PLLCOUT}$	-0.091	-0.101	0.037	0.033	0.024	ns

Table 5–53. EP2S60 Column Pins Global Clock Timing Parameters

Parameter	Minimum Timing		-3 Speed Grade	-4 Speed Grade	-5 Speed Grade	Unit
	Industrial	Commercial				
t_{CIN}	1.658	1.739	2.920	3.350	3.899	ns
t_{COUT}	1.501	1.574	2.678	3.072	3.575	ns
t_{PLLCIN}	0.06	0.057	0.278	0.304	0.355	ns
$t_{PLLCOUT}$	-0.097	-0.108	0.036	0.026	0.031	ns

Table 5–54. EP2S60 Row Pins Regional Clock Timing Parameters

Parameter	Minimum Timing		-3 Speed Grade	-4 Speed Grade	-5 Speed Grade	Unit
	Industrial	Commercial				
t_{CIN}	1.463	1.532	2.591	2.972	3.453	ns
t_{COUT}	1.468	1.537	2.587	2.968	3.448	ns
t_{PLLCIN}	-0.153	-0.167	-0.079	-0.099	-0.128	ns
$t_{PLLCOUT}$	-0.148	-0.162	-0.083	-0.103	-0.133	ns

Table 5–55. EP2S60 Row Pins Global Clock Timing Parameters

Parameter	Minimum Timing		-3 Speed Grade	-4 Speed Grade	-5 Speed Grade	Unit
	Industrial	Commercial				
t_{CIN}	1.439	1.508	2.562	2.940	3.421	ns
t_{COUT}	1.444	1.513	2.558	2.936	3.416	ns
t_{PLLCIN}	-0.161	-0.174	-0.083	-0.107	-0.126	ns
$t_{PLLCOUT}$	-0.156	-0.169	-0.087	-0.111	-0.131	ns

EP2S90 Clock Timing Parameters

Tables 5–56 through 5–59 show the maximum clock timing parameters for EP2S90 devices.

Table 5–56. EP2S90 Column Pins Regional Clock Timing Parameters

Parameter	Minimum Timing		-3 Speed Grade	-4 Speed Grade	-5 Speed Grade	Unit
	Industrial	Commercial				
t_{CIN}	1.768	1.850	3.033	3.473	4.040	ns
t_{COUT}	1.611	1.685	2.791	3.195	3.716	ns
t_{PLLCIN}	-0.127	-0.117	0.125	0.129	0.144	ns
$t_{PLLCOUT}$	-0.284	-0.282	-0.117	-0.149	-0.18	ns

Table 5–57. EP2S90 Column Pins Global Clock Timing Parameters

Parameter	Minimum Timing		-3 Speed Grade	-4 Speed Grade	-5 Speed Grade	Unit
	Industrial	Commercial				
t_{CIN}	1.783	1.868	3.058	3.502	4.070	ns
t_{COUT}	1.626	1.703	2.816	3.224	3.746	ns
t_{PLLCIN}	-0.137	-0.127	0.115	0.119	0.134	ns
$t_{PLLCOUT}$	-0.294	-0.292	-0.127	-0.159	-0.19	ns

Table 5–58. EP2S90 Row Pins Regional Clock Timing Parameters

Parameter	Minimum Timing		-3 Speed Grade	-4 Speed Grade	-5 Speed Grade	Unit
	Industrial	Commercial				
t_{CIN}	1.566	1.638	2.731	3.124	3.632	ns
t_{COUT}	1.571	1.643	2.727	3.120	3.627	ns
t_{PLLCIN}	-0.326	-0.326	-0.178	-0.218	-0.264	ns
$t_{PLLCOUT}$	-0.321	-0.321	-0.182	-0.222	-0.269	ns

Table 5–59. EP2S90 Row Pins Global Clock Timing Parameters

Parameter	Minimum Timing		-3 Speed Grade	-4 Speed Grade	-5 Speed Grade	Unit
	Industrial	Commercial				
t_{CIN}	1.585	1.658	2.757	3.154	3.665	ns
t_{COUT}	1.590	1.663	2.753	3.150	3.660	ns
t_{PLLCIN}	-0.341	-0.341	-0.193	-0.235	-0.278	ns
$t_{PLLCOUT}$	-0.336	-0.336	-0.197	-0.239	-0.283	ns

EP2S130 Clock Timing Parameters

Tables 5–60 through 5–63 show the maximum clock timing parameters for EP2S130 devices.

Table 5–60. EP2S130 Column Pins Regional Clock Timing Parameters

Parameter	Minimum Timing		-3 Speed Grade	-4 Speed Grade	-5 Speed Grade	Unit
	Industrial	Commercial				
t_{CIN}	1.889	1.981	3.405	3.722	4.326	ns
t_{COUT}	1.732	1.816	3.151	3.444	4.002	ns
t_{PLLCIN}	0.105	0.106	0.226	0.242	0.277	ns
$t_{PLLCOUT}$	-0.052	-0.059	-0.028	-0.036	-0.047	ns

Table 5–61. EP2S130 Column Pins Global Clock Timing Parameters

Parameter	Minimum Timing		-3 Speed Grade	-4 Speed Grade	-5 Speed Grade	Unit
	Industrial	Commercial				
t_{CIN}	1.907	1.998	3.420	3.740	4.348	ns
t_{COUT}	1.750	1.833	3.166	3.462	4.024	ns
t_{PLLCIN}	0.134	0.136	0.276	0.296	0.338	ns
$t_{PLLCOUT}$	-0.023	-0.029	0.022	0.018	0.014	ns

Table 5–62. EP2S130 Row Pins Regional Clock Timing Parameters

Parameter	Minimum Timing		-3 Speed Grade	-4 Speed Grade	-5 Speed Grade	Unit
	Industrial	Commercial				
t_{CIN}	1.680	1.760	3.070	3.351	3.892	ns
t_{COUT}	1.685	1.765	3.066	3.347	3.887	ns
t_{PLLCIN}	-0.113	-0.124	-0.12	-0.138	-0.168	ns
$t_{PLLCOUT}$	-0.108	-0.119	-0.124	-0.142	-0.173	ns

Table 5–63. EP2S130 Row Pins Global Clock Timing Parameters

Parameter	Minimum Timing		-3 Speed Grade	-4 Speed Grade	-5 Speed Grade	Unit
	Industrial	Commercial				
t_{CIN}	1.690	1.770	3.075	3.362	3.905	ns
t_{COUT}	1.695	1.775	3.071	3.358	3.900	ns
t_{PLLCIN}	-0.087	-0.097	-0.075	-0.089	-0.11	ns
$t_{PLLCOUT}$	-0.082	-0.092	-0.079	-0.093	-0.115	ns

EP2S180 Clock Timing Parameters

Tables 5–64 through 5–67 show the maximum clock timing parameters for EP2S180 devices.

Table 5–64. EP2S180 Column Pins Regional Clock Timing Parameters

Parameter	Minimum Timing		-3 Speed Grade	-4 Speed Grade	-5 Speed Grade	Unit
	Industrial	Commercial				
t_{CIN}	2.001	2.095	3.643	3.984	4.634	ns
t_{COUT}	1.844	1.930	3.389	3.706	4.310	ns
t_{PLLCIN}	-0.307	-0.297	0.053	0.046	0.048	ns
$t_{PLLCOUT}$	-0.464	-0.462	-0.201	-0.232	-0.276	ns

Table 5–65. EP2S180 Column Pins Global Clock Timing Parameters

Parameter	Minimum Timing		-3 Speed Grade	-4 Speed Grade	-5 Speed Grade	Unit
	Industrial	Commercial				
t_{CIN}	2.003	2.100	3.652	3.993	4.648	ns
t_{COUT}	1.846	1.935	3.398	3.715	4.324	ns
t_{PLLCIN}	-0.3	-0.29	0.053	0.054	0.058	ns
$t_{PLLCOUT}$	-0.457	-0.455	-0.201	-0.224	-0.266	ns

Table 5–66. EP2S180 Row Pins Regional Clock Timing Parameters

Parameter	Minimum Timing		-3 Speed Grade	-4 Speed Grade	-5 Speed Grade	Unit
	Industrial	Commercial				
t_{CIN}	1.759	1.844	3.273	3.577	4.162	ns
t_{COUT}	1.764	1.849	3.269	3.573	4.157	ns
t_{PLLCIN}	-0.542	-0.541	-0.317	-0.353	-0.414	ns
$t_{PLLCOUT}$	-0.537	-0.536	-0.321	-0.357	-0.419	ns

Table 5–67. EP2S180 Row Pins Global Clock Timing Parameters

Parameter	Minimum Timing		-3 Speed Grade	-4 Speed Grade	-5 Speed Grade	Unit
	Industrial	Commercial				
t_{CIN}	1.763	1.850	3.285	3.588	4.176	ns
t_{COUT}	1.768	1.855	3.281	3.584	4.171	ns
t_{PLLCIN}	-0.542	-0.542	-0.319	-0.355	-0.42	ns
$t_{PLLCOUT}$	-0.537	-0.537	-0.323	-0.359	-0.425	ns

Clock Network Skew Adders

The Quartus II software models skew within dedicated clock networks such as global and regional clocks. Therefore, intra-clock network skew adder is not specified. Table 5–68 specifies the clock skew between any two clock networks driving registers in the IOE.

Table 5–68. Clock Network Specifications

Name	Description	Min	Typ	Max	Unit
Clock skew adder EP2S15, EP2S30, EP2S60 *(1)*	Inter-clock network, same side			±50	ps
	Inter-clock network, entire chip			±100	ps
Clock skew adder EP2S90 *(1)*	Inter-clock network, same side			±55	ps
	Inter-clock network, entire chip			±110	ps
Clock skew adder EP2S130 *(1)*	Inter-clock network, same side			±63	ps
	Inter-clock network, entire chip			±125	ps
Clock skew adder EP2S180 *(1)*	Inter-clock network, same side			±75	ps
	Inter-clock network, entire chip			±150	ps

Note to Table 5–68:

(1) This is in addition to intra-clock network skew, which is modeled in the Quartus II software.

IOE Programmable Delay

See Tables 5–69 and 5–70 for IOE programmable delay.

Table 5–69. Stratix II IOE Programmable Delay on Column Pins *Note (1)*

Parameter	Paths Affected	Available Settings	Minimum Timing (2)		-3 Speed Grade (3)		-4 Speed Grade		-5 Speed Grade	
			Min Offset (ps)	Max Offset (ps)	Min Offset (ps)	Max Offset (ps)	Min Offset (ps)	Max Offset (ps)	Min Offset (ps)	Max Offset (ps)
Input delay from pin to internal cells	Pad to I/O dataout to logic array	8	0 0	1,696 1,781	0 0	2,881 3,025	0	3,313	0	3,860
Input delay from pin to input register	Pad to I/O input register	64	0 0	1,955 2,053	0 0	3,275 3,439	0	3,766	0	4,388
Delay from output register to output pin	I/O output register to pad	2	0 0	316 332	0 0	500 525	0	575	0	670
Output enable pin delay	t_{XZ}, t_{ZX}	2	0 0	305 320	0 0	483 507	0	556	0	647

Notes to Table 5–69:

(1) The incremental values for the settings are generally linear. For the exact delay associated with each setting, use the latest version of the Quartus II software.

(2) The first number is the minimum timing parameter for industrial devices. The second number is the minimum timing parameter for commercial devices.

(3) The first number applies to -3 speed grade EP2S15, EP2S30, EP2S60, and EP2S90 devices. The second number applies to -3 speed grade EP2S130 and EP2S180 devices.

Table 5–70. Stratix II IOE Programmable Delay on Row Pins *Note (1)*

Parameter	Paths Affected	Available Settings	Minimum Timing *(2)*		-3 Speed Grade *(3)*		-4 Speed Grade		-5 Speed Grade	
			Min Offset (ps)	Max Offset (ps)	Min Offset (ps)	Max Offset (ps)	Min Offset (ps)	Max Offset (ps)	Min Offset (ps)	Max Offset (ps)
Input delay from pin to internal cells	Pad to I/O dataout to logic array	8	0 0	1,697 1,782	0 0	2,876 3,020	0	3,308	0	3,853
Input delay from pin to input register	Pad to I/O input register	64	0 0	1,956 2,054	0 0	3,270 3,434	0	3,761	0	4,381
Delay from output register to output pin	I/O output register to pad	2	0 0	316 332	0 0	525 525	0	575	0	670
Output enable pin delay	t_{XZ}, t_{ZX}	2	0 0	305 320	0 0	507 507	0	556	0	647

Notes to Table 5–70:

(1) The incremental values for the settings are generally linear. For the exact delay associated with each setting, use the latest version of the Quartus II software.

(2) The first number is the minimum timing parameter for industrial devices. The second number is the minimum timing parameter for commercial devices.

(3) The first number applies to -3 speed grade EP2S15, EP2S30, EP2S60, and EP2S90 devices. The second number applies to -3 speed grade EP2S130 and EP2S180 devices.

Default Capacitive Loading of Different I/O Standards

See Table 5–71 for default capacitive loading of different I/O standards.

Table 5–71. Default Loading of Different I/O Standards for Stratix II (Part 1 of 2)

I/O Standard	Capacitive Load	Unit
LVTTL	0	pF
LVCMOS	0	pF
2.5 V	0	pF
1.8 V	0	pF
1.5 V	0	pF
PCI	10	pF
PCI-X	10	pF
SSTL-2 Class I	0	pF

Table 5–71. Default Loading of Different I/O Standards for Stratix II (Part 2 of 2)

I/O Standard	Capacitive Load	Unit
SSTL-2 Class II	0	pF
SSTL-18 Class I	0	pF
SSTL-18 Class II	0	pF
1.5-V HSTL Class I	0	pF
1.5-V HSTL Class II	0	pF
1.8-V HSTL Class I	0	pF
1.8-V HSTL Class II	0	pF
1.2-V HSTL with OCT	0	pF
Differential SSTL-2 Class I	0	pF
Differential SSTL-2 Class II	0	pF
Differential SSTL-18 Class I	0	pF
Differential SSTL-18 Class II	0	pF
1.5-V Differential HSTL Class I	0	pF
1.5-V Differential HSTL Class II	0	pF
1.8-V Differential HSTL Class I	0	pF
1.8-V Differential HSTL Class II	0	pF
LVDS	0	pF
HyperTransport	0	pF
LVPECL	0	pF

I/O Delays

See Tables 5–72 through 5–76 for I/O delays.

Table 5–72. I/O Delay Parameters

Symbol	Parameter
t_{DIP}	Delay from I/O datain to output pad
t_{OP}	Delay from I/O output register to output pad
t_{PCOUT}	Delay from input pad to I/O dataout to core
t_{PI}	Delay from input pad to I/O input register

Table 5–73. Stratix II I/O Input Delay for Column Pins (Part 1 of 3)

I/O Standard	Parameter	Minimum Timing		-3 Speed Grade (2)	-3 Speed Grade (3)	-4 Speed Grade	-5 Speed Grade	Unit
		Industrial	Commercial					
LVTTL	t_{PI}	674	707	1223	1282	1405	1637	ps
	t_{PCOUT}	408	428	787	825	904	1054	ps
2.5 V	t_{PI}	684	717	1210	1269	1390	1619	ps
	t_{PCOUT}	418	438	774	812	889	1036	ps
1.8 V	t_{PI}	747	783	1366	1433	1570	1829	ps
	t_{PCOUT}	481	504	930	976	1069	1246	ps
1.5 V	t_{PI}	749	786	1436	1506	1650	1922	ps
	t_{PCOUT}	483	507	1000	1049	1149	1339	ps
LVCMOS	t_{PI}	674	707	1223	1282	1405	1637	ps
	t_{PCOUT}	408	428	787	825	904	1054	ps
SSTL-2 Class I	t_{PI}	507	530	818	857	939	1094	ps
	t_{PCOUT}	241	251	382	400	438	511	ps
SSTL-2 Class II	t_{PI}	507	530	818	857	939	1094	ps
	t_{PCOUT}	241	251	382	400	438	511	ps
SSTL-18 Class I	t_{PI}	543	569	898	941	1031	1201	ps
	t_{PCOUT}	277	290	462	484	530	618	ps
SSTL-18 Class II	t_{PI}	543	569	898	941	1031	1201	ps
	t_{PCOUT}	277	290	462	484	530	618	ps
1.5-V HSTL Class I	t_{PI}	560	587	993	1041	1141	1329	ps
	t_{PCOUT}	294	308	557	584	640	746	ps

Table 5–73. Stratix II I/O Input Delay for Column Pins (Part 2 of 3)

I/O Standard	Parameter	Minimum Timing		-3 Speed Grade (2)	-3 Speed Grade (3)	-4 Speed Grade	-5 Speed Grade	Unit
		Industrial	Commercial					
1.5-V HSTL Class II	t_{PI}	560	587	993	1041	1141	1329	ps
	t_{PCOUT}	294	308	557	584	640	746	ps
1.8-V HSTL Class I	t_{PI}	543	569	898	941	1031	1201	ps
	t_{PCOUT}	277	290	462	484	530	618	ps
1.8-V HSTL Class II	t_{PI}	543	569	898	941	1031	1201	ps
	t_{PCOUT}	277	290	462	484	530	618	ps
PCI	t_{PI}	679	712	1214	1273	1395	1625	ps
	t_{PCOUT}	413	433	778	816	894	1042	ps
PCI-X	t_{PI}	679	712	1214	1273	1395	1625	ps
	t_{PCOUT}	413	433	778	816	894	1042	ps
Differential SSTL-2 Class I (1)	t_{PI}	507	530	818	857	939	1094	ps
	t_{PCOUT}	241	251	382	400	438	511	ps
Differential SSTL-2 Class II (1)	t_{PI}	507	530	818	857	939	1094	ps
	t_{PCOUT}	241	251	382	400	438	511	ps
Differential SSTL-18 Class I (1)	t_{PI}	543	569	898	941	1031	1201	ps
	t_{PCOUT}	277	290	462	484	530	618	ps
Differential SSTL-18 Class II (1)	t_{PI}	543	569	898	941	1031	1201	ps
	t_{PCOUT}	277	290	462	484	530	618	ps
1.8-V Differential HSTL Class I (1)	t_{PI}	543	569	898	941	1031	1201	ps
	t_{PCOUT}	277	290	462	484	530	618	ps
1.8-V Differential HSTL Class II (1)	t_{PI}	543	569	898	941	1031	1201	ps
	t_{PCOUT}	277	290	462	484	530	618	ps
1.5-V Differential HSTL Class I (1)	t_{PI}	560	587	993	1041	1141	1329	ps
	t_{PCOUT}	294	308	557	584	640	746	ps
1.5-V Differential HSTL Class II (1)	t_{PI}	560	587	993	1041	1141	1329	ps
	t_{PCOUT}	294	308	557	584	640	746	ps

Table 5–73. Stratix II I/O Input Delay for Column Pins (Part 3 of 3)

I/O Standard	Parameter	Minimum Timing		-3 Speed Grade (2)	-3 Speed Grade (3)	-4 Speed Grade	-5 Speed Grade	Unit
		Industrial	Commercial					
1.2-V HSTL	t_{PI}	645	677	1194	1252	-	-	ps
	t_{PCOUT}	379	398	758	795	-	-	ps

Notes for Table 5–73:
(1) These I/O standards are only supported on DQS pins.
(2) These numbers apply to -3 speed grade EP2S15, EP2S30, EP2S60, and EP2S90 devices.
(3) These numbers apply to -3 speed grade EP2S130 and EP2S180 devices.

Table 5–74. Stratix II I/O Input Delay for Row Pins (Part 1 of 2)

I/O Standard	Parameter	Minimum Timing		-3 Speed Grade (1)	-3 Speed Grade (2)	-4 Speed Grade	-5 Speed Grade	Unit
		Industrial	Commercial					
LVTTL	t_{PI}	715	749	1287	1350	1477	1723	ps
	t_{PCOUT}	391	410	760	798	873	1018	ps
2.5 V	t_{PI}	726	761	1273	1335	1461	1704	ps
	t_{PCOUT}	402	422	746	783	857	999	ps
1.8 V	t_{PI}	788	827	1427	1497	1639	1911	ps
	t_{PCOUT}	464	488	900	945	1035	1206	ps
1.5 V	t_{PI}	792	830	1498	1571	1720	2006	ps
	t_{PCOUT}	468	491	971	1019	1116	1301	ps
LVCMOS	t_{PI}	715	749	1287	1350	1477	1723	ps
	t_{PCOUT}	391	410	760	798	873	1018	ps
SSTL-2 Class I	t_{PI}	547	573	879	921	1008	1176	ps
	t_{PCOUT}	223	234	352	369	404	471	ps
SSTL-2 Class II	t_{PI}	547	573	879	921	1008	1176	ps
	t_{PCOUT}	223	234	352	369	404	471	ps
SSTL-18 Class I	t_{PI}	577	605	960	1006	1101	1285	ps
	t_{PCOUT}	253	266	433	454	497	580	ps
SSTL-18 Class II	t_{PI}	577	605	960	1006	1101	1285	ps
	t_{PCOUT}	253	266	433	454	497	580	ps
1.5-V HSTL Class I	t_{PI}	602	631	1056	1107	1212	1413	ps
	t_{PCOUT}	278	292	529	555	608	708	ps

Table 5–74. Stratix II I/O Input Delay for Row Pins (Part 2 of 2)

I/O Standard	Parameter	Minimum Timing		-3 Speed Grade (1)	-3 Speed Grade (2)	-4 Speed Grade	-5 Speed Grade	Unit
		Industrial	Commercial					
1.5-V HSTL Class II	t_{PI}	602	631	1056	1107	1212	1413	ps
	t_{PCOUT}	278	292	529	555	608	708	ps
1.8-V HSTL Class I	t_{PI}	577	605	960	1006	1101	1285	ps
	t_{PCOUT}	253	266	433	454	497	580	ps
1.8-V HSTL Class II	t_{PI}	577	605	960	1006	1101	1285	ps
	t_{PCOUT}	253	266	433	454	497	580	ps
LVDS	t_{PI}	515	540	948	994	1088	1269	ps
	t_{PCOUT}	191	201	421	442	484	564	ps
HyperTransport	t_{PI}	515	540	948	994	1088	1269	ps
	t_{PCOUT}	191	201	421	442	484	564	ps

Notes for Table 5–74:
(1) These numbers apply to -3 speed grade EP2S15, EP2S30, EP2S60, and EP2S90 devices.
(2) These numbers apply to -3 speed grade EP2S130 and EP2S180 devices.

Table 5–75. Stratix II I/O Output Delay for Column Pins (Part 1 of 8)

I/O Standard	Drive Strength	Parameter	Minimum Timing		-3 Speed Grade (3)	-3 Speed Grade (4)	-4 Speed Grade	-5 Speed Grade	Unit
			Industrial	Commercial					
LVTTL	4 mA	t_{OP}	1178	1236	2351	2467	2702	2820	ps
		t_{DIP}	1198	1258	2417	2537	2778	2910	ps
	8 mA	t_{OP}	1041	1091	2036	2136	2340	2448	ps
		t_{DIP}	1061	1113	2102	2206	2416	2538	ps
	12 mA	t_{OP}	976	1024	2036	2136	2340	2448	ps
		t_{DIP}	996	1046	2102	2206	2416	2538	ps
	16 mA	t_{OP}	951	998	1893	1986	2176	2279	ps
		t_{DIP}	971	1020	1959	2056	2252	2369	ps
	20 mA	t_{OP}	931	976	1787	1875	2054	2154	ps
		t_{DIP}	951	998	1853	1945	2130	2244	ps
	24 mA (1)	t_{OP}	924	969	1788	1876	2055	2156	ps
		t_{DIP}	944	991	1854	1946	2131	2246	ps

Table 5–75. Stratix II I/O Output Delay for Column Pins (Part 2 of 8)

I/O Standard	Drive Strength	Parameter	Minimum Timing		-3 Speed Grade (3)	-3 Speed Grade (4)	-4 Speed Grade	-5 Speed Grade	Unit
			Industrial	Commercial					
LVCMOS	4 mA	t_{OP}	1041	1091	2036	2136	2340	2448	ps
		t_{DIP}	1061	1113	2102	2206	2416	2538	ps
	8 mA	t_{OP}	952	999	1786	1874	2053	2153	ps
		t_{DIP}	972	1021	1852	1944	2129	2243	ps
	12 mA	t_{OP}	926	971	1720	1805	1977	2075	ps
		t_{DIP}	946	993	1786	1875	2053	2165	ps
	16 mA	t_{OP}	933	978	1693	1776	1946	2043	ps
		t_{DIP}	953	1000	1759	1846	2022	2133	ps
	20 mA	t_{OP}	921	965	1677	1759	1927	2025	ps
		t_{DIP}	941	987	1743	1829	2003	2115	ps
	24 mA (1)	t_{OP}	909	954	1659	1741	1906	2003	ps
		t_{DIP}	929	976	1725	1811	1982	2093	ps
2.5 V	4 mA	t_{OP}	1004	1053	2063	2165	2371	2480	ps
		t_{DIP}	1024	1075	2129	2235	2447	2570	ps
	8 mA	t_{OP}	955	1001	1841	1932	2116	2218	ps
		t_{DIP}	975	1023	1907	2002	2192	2308	ps
	12 mA	t_{OP}	934	980	1742	1828	2002	2101	ps
		t_{DIP}	954	1002	1808	1898	2078	2191	ps
	16 mA (1)	t_{OP}	918	962	1679	1762	1929	2027	ps
		t_{DIP}	938	984	1745	1832	2005	2117	ps

Table 5–75. Stratix II I/O Output Delay for Column Pins (Part 3 of 8)

I/O Standard	Drive Strength	Parameter	Minimum Timing		-3 Speed Grade (3)	-3 Speed Grade (4)	-4 Speed Grade	-5 Speed Grade	Unit
			Industrial	Commercial					
1.8 V	2 mA	t_{OP}	1042	1093	2904	3048	3338	3472	ps
		t_{DIP}	1062	1115	2970	3118	3414	3562	ps
	4 mA	t_{OP}	1047	1098	2248	2359	2584	2698	ps
		t_{DIP}	1067	1120	2314	2429	2660	2788	ps
	6 mA	t_{OP}	974	1022	2024	2124	2326	2434	ps
		t_{DIP}	994	1044	2090	2194	2402	2524	ps
	8 mA	t_{OP}	976	1024	1947	2043	2238	2343	ps
		t_{DIP}	996	1046	2013	2113	2314	2433	ps
	10 mA	t_{OP}	933	978	1882	1975	2163	2266	ps
		t_{DIP}	953	1000	1948	2045	2239	2356	ps
	12 mA (1)	t_{OP}	934	979	1833	1923	2107	2209	ps
		t_{DIP}	954	1001	1899	1993	2183	2299	ps
1.5 V	2 mA	t_{OP}	1023	1073	2505	2629	2879	3002	ps
		t_{DIP}	1043	1095	2571	2699	2955	3092	ps
	4 mA	t_{OP}	963	1009	2023	2123	2325	2433	ps
		t_{DIP}	983	1031	2089	2193	2401	2523	ps
	6 mA	t_{OP}	966	1012	1923	2018	2210	2315	ps
		t_{DIP}	986	1034	1989	2088	2286	2405	ps
	8 mA (1)	t_{OP}	926	971	1878	1970	2158	2262	ps
		t_{DIP}	946	993	1944	2040	2234	2352	ps
SSTL-2 Class I	8 mA	t_{OP}	913	957	1715	1799	1971	2041	ps
		t_{DIP}	933	979	1781	1869	2047	2131	ps
	12 mA (1)	t_{OP}	896	940	1672	1754	1921	1991	ps
		t_{DIP}	916	962	1738	1824	1997	2081	ps
SSTL-2 Class II	16 mA	t_{OP}	876	918	1609	1688	1849	1918	ps
		t_{DIP}	896	940	1675	1758	1925	2008	ps
	20 mA	t_{OP}	877	919	1598	1676	1836	1905	ps
		t_{DIP}	897	941	1664	1746	1912	1995	ps
	24 mA (1)	t_{OP}	872	915	1596	1674	1834	1903	ps
		t_{DIP}	892	937	1662	1744	1910	1993	ps

Table 5–75. Stratix II I/O Output Delay for Column Pins (Part 4 of 8)

I/O Standard	Drive Strength	Parameter	Minimum Timing		-3 Speed Grade (3)	-3 Speed Grade (4)	-4 Speed Grade	-5 Speed Grade	Unit
			Industrial	Commercial					
SSTL-18 Class I	4 mA	t_{OP}	909	953	1690	1773	1942	2012	ps
		t_{DIP}	929	975	1756	1843	2018	2102	ps
	6 mA	t_{OP}	914	958	1656	1737	1903	1973	ps
		t_{DIP}	934	980	1722	1807	1979	2063	ps
	8 mA	t_{OP}	894	937	1640	1721	1885	1954	ps
		t_{DIP}	914	959	1706	1791	1961	2044	ps
	10 mA	t_{OP}	898	942	1638	1718	1882	1952	ps
		t_{DIP}	918	964	1704	1788	1958	2042	ps
	12 mA (1)	t_{OP}	891	936	1626	1706	1869	1938	ps
		t_{DIP}	911	958	1692	1776	1945	2028	ps
SSTL-18 Class II	8 mA	t_{OP}	883	925	1597	1675	1835	1904	ps
		t_{DIP}	903	947	1663	1745	1911	1994	ps
	16 mA	t_{OP}	894	937	1578	1655	1813	1882	ps
		t_{DIP}	914	959	1644	1725	1889	1972	ps
	18 mA	t_{OP}	890	933	1585	1663	1821	1890	ps
		t_{DIP}	910	955	1651	1733	1897	1980	ps
	20 mA (1)	t_{OP}	890	933	1583	1661	1819	1888	ps
		t_{DIP}	910	955	1649	1731	1895	1978	ps
1.8-V HSTL Class I	4 mA	t_{OP}	912	956	1608	1687	1848	1943	ps
		t_{DIP}	932	978	1674	1757	1924	2033	ps
	6 mA	t_{OP}	917	962	1595	1673	1833	1928	ps
		t_{DIP}	937	984	1661	1743	1909	2018	ps
	8 mA	t_{OP}	896	940	1586	1664	1823	1917	ps
		t_{DIP}	916	962	1652	1734	1899	2007	ps
	10 mA	t_{OP}	900	944	1591	1669	1828	1923	ps
		t_{DIP}	920	966	1657	1739	1904	2013	ps
	12 mA (1)	t_{OP}	892	936	1585	1663	1821	1916	ps
		t_{DIP}	912	958	1651	1733	1897	2006	ps

Table 5–75. Stratix II I/O Output Delay for Column Pins (Part 5 of 8)

I/O Standard	Drive Strength	Parameter	Minimum Timing		-3 Speed Grade (3)	-3 Speed Grade (4)	-4 Speed Grade	-5 Speed Grade	Unit
			Industrial	Commercial					
1.8-V HSTL Class II	16 mA	t_{OP}	877	919	1385	1453	1591	1680	ps
		t_{DIP}	897	941	1451	1523	1667	1770	ps
	18 mA	t_{OP}	879	921	1394	1462	1602	1691	ps
		t_{DIP}	899	943	1460	1532	1678	1781	ps
	20 mA (1)	t_{OP}	879	921	1402	1471	1611	1700	ps
		t_{DIP}	899	943	1468	1541	1687	1790	ps
1.5-V HSTL Class I	4 mA	t_{OP}	912	956	1607	1686	1847	1942	ps
		t_{DIP}	932	978	1673	1756	1923	2032	ps
	6 mA	t_{OP}	917	961	1588	1666	1825	1920	ps
		t_{DIP}	937	983	1654	1736	1901	2010	ps
	8 mA	t_{OP}	899	943	1590	1668	1827	1922	ps
		t_{DIP}	919	965	1656	1738	1903	2012	ps
	10 mA	t_{OP}	900	943	1592	1670	1829	1924	ps
		t_{DIP}	920	965	1658	1740	1905	2014	ps
	12 mA (1)	t_{OP}	893	937	1590	1668	1827	1922	ps
		t_{DIP}	913	959	1656	1738	1903	2012	ps
1.5-V HSTL Class II	16 mA	t_{OP}	881	924	1431	1501	1644	1734	ps
		t_{DIP}	901	946	1497	1571	1720	1824	ps
	18 mA	t_{OP}	884	927	1439	1510	1654	1744	ps
		t_{DIP}	904	949	1505	1580	1730	1834	ps
	20 mA (1)	t_{OP}	886	929	1450	1521	1666	1757	ps
		t_{DIP}	906	951	1516	1591	1742	1847	ps
1.2-V HSTL		t_{OP}	958	1004	1602	1681	-	-	ps
		t_{DIP}	978	1026	1668	1751	-	-	ps
PCI		t_{OP}	1028	1082	1956	2051	2244	2070	ps
		t_{DIP}	1048	1104	2022	2121	2320	2160	ps
PCI-X		t_{OP}	1028	1082	1956	2051	2244	2070	ps
		t_{DIP}	1048	1104	2022	2121	2320	2160	ps

Table 5–75. Stratix II I/O Output Delay for Column Pins (Part 6 of 8)

I/O Standard	Drive Strength	Parameter	Minimum Timing		-3 Speed Grade (3)	-3 Speed Grade (4)	-4 Speed Grade	-5 Speed Grade	Unit
			Industrial	Commercial					
Differential SSTL-2 Class I	8 mA	t_{OP}	913	957	1715	1799	1971	2041	ps
		t_{DIP}	933	979	1781	1869	2047	2131	ps
	12 mA	t_{OP}	896	940	1672	1754	1921	1991	ps
		t_{DIP}	916	962	1738	1824	1997	2081	ps
Differential SSTL-2 Class II	16 mA	t_{OP}	876	918	1609	1688	1849	1918	ps
		t_{DIP}	896	940	1675	1758	1925	2008	ps
	20 mA	t_{OP}	877	919	1598	1676	1836	1905	ps
		t_{DIP}	897	941	1664	1746	1912	1995	ps
	24 mA	t_{OP}	872	915	1596	1674	1834	1903	ps
		t_{DIP}	892	937	1662	1744	1910	1993	ps
Differential SSTL-18 Class I	4 mA	t_{OP}	909	953	1690	1773	1942	2012	ps
		t_{DIP}	929	975	1756	1843	2018	2102	ps
	6 mA	t_{OP}	914	958	1656	1737	1903	1973	ps
		t_{DIP}	934	980	1722	1807	1979	2063	ps
	8 mA	t_{OP}	894	937	1640	1721	1885	1954	ps
		t_{DIP}	914	959	1706	1791	1961	2044	ps
	10 mA	t_{OP}	898	942	1638	1718	1882	1952	ps
		t_{DIP}	918	964	1704	1788	1958	2042	ps
	12 mA	t_{OP}	891	936	1626	1706	1869	1938	ps
		t_{DIP}	911	958	1692	1776	1945	2028	ps
Differential SSTL-18 Class II	8 mA	t_{OP}	883	925	1597	1675	1835	1904	ps
		t_{DIP}	903	947	1663	1745	1911	1994	ps
	16 mA	t_{OP}	894	937	1578	1655	1813	1882	ps
		t_{DIP}	914	959	1644	1725	1889	1972	ps
	18 mA	t_{OP}	890	933	1585	1663	1821	1890	ps
		t_{DIP}	910	955	1651	1733	1897	1980	ps
	20 mA	t_{OP}	890	933	1583	1661	1819	1888	ps
		t_{DIP}	910	955	1649	1731	1895	1978	ps

Table 5–75. Stratix II I/O Output Delay for Column Pins (Part 7 of 8)

I/O Standard	Drive Strength	Parameter	Minimum Timing		-3 Speed Grade (3)	-3 Speed Grade (4)	-4 Speed Grade	-5 Speed Grade	Unit
			Industrial	Commercial					
1.8-V Differential HSTL Class I	4 mA	t_{OP}	912	956	1608	1687	1848	1943	ps
		t_{DIP}	932	978	1674	1757	1924	2033	ps
	6 mA	t_{OP}	917	962	1595	1673	1833	1928	ps
		t_{DIP}	937	984	1661	1743	1909	2018	ps
	8 mA	t_{OP}	896	940	1586	1664	1823	1917	ps
		t_{DIP}	916	962	1652	1734	1899	2007	ps
	10 mA	t_{OP}	900	944	1591	1669	1828	1923	ps
		t_{DIP}	920	966	1657	1739	1904	2013	ps
	12 mA	t_{OP}	892	936	1585	1663	1821	1916	ps
		t_{DIP}	912	958	1651	1733	1897	2006	ps
1.8-V Differential HSTL Class II	16 mA	t_{OP}	877	919	1385	1453	1591	1680	ps
		t_{DIP}	897	941	1451	1523	1667	1770	ps
	18 mA	t_{OP}	879	921	1394	1462	1602	1691	ps
		t_{DIP}	899	943	1460	1532	1678	1781	ps
	20 mA	t_{OP}	879	921	1402	1471	1611	1700	ps
		t_{DIP}	899	943	1468	1541	1687	1790	ps
1.5-V Differential HSTL Class I	4 mA	t_{OP}	912	956	1607	1686	1847	1942	ps
		t_{DIP}	932	978	1673	1756	1923	2032	ps
	6 mA	t_{OP}	917	961	1588	1666	1825	1920	ps
		t_{DIP}	937	983	1654	1736	1901	2010	ps
	8 mA	t_{OP}	899	943	1590	1668	1827	1922	ps
		t_{DIP}	919	965	1656	1738	1903	2012	ps
	10 mA	t_{OP}	900	943	1592	1670	1829	1924	ps
		t_{DIP}	920	965	1658	1740	1905	2014	ps
	12 mA	t_{OP}	893	937	1590	1668	1827	1922	
		t_{DIP}	913	959	1656	1738	1903	2012	

Table 5–75. Stratix II I/O Output Delay for Column Pins (Part 8 of 8)

I/O Standard	Drive Strength	Parameter	Minimum Timing		-3 Speed Grade (3)	-3 Speed Grade (4)	-4 Speed Grade	-5 Speed Grade	Unit
			Industrial	Commercial					
1.5-V Differential HSTL Class II	16 mA	t_{OP}	881	924	1431	1501	1644	1734	ps
		t_{DIP}	901	946	1497	1571	1720	1824	ps
	18 mA	t_{OP}	884	927	1439	1510	1654	1744	
		t_{DIP}	904	949	1505	1580	1730	1834	
	20 mA	t_{OP}	886	929	1450	1521	1666	1757	
		t_{DIP}	906	951	1516	1591	1742	1847	

Notes to Table 5–75:

(1) This is the default setting in the Quartus II software.
(2) These I/O standards are only supported on DQS pins.
(3) These numbers apply to -3 speed grade EP2S15, EP2S30, EP2S60, and EP2S90 devices.
(4) These numbers apply to -3 speed grade EP2S130 and EP2S180 devices.

Table 5–76. Stratix II I/O Output Delay for Row Pins (Part 1 of 3)

I/O Standard	Drive Strength	Parameter	Minimum Timing		-3 Speed Grade (2)	-3 Speed Grade (3)	-4 Speed Grade	-5 Speed Grade	Unit
			Industrial	Commercial					
LVTTL	4 mA	t_{OP}	1267	1328	2655	2786	3052	3189	ps
		t_{DIP}	1225	1285	2600	2729	2989	3116	ps
	8 mA	t_{OP}	1144	1200	2113	2217	2429	2549	ps
		t_{DIP}	1102	1157	2058	2160	2366	2476	ps
	12 mA (1)	t_{OP}	1091	1144	2081	2184	2392	2512	ps
		t_{DIP}	1049	1101	2026	2127	2329	2439	ps
LVCMOS	4 mA	t_{OP}	1144	1200	2113	2217	2429	2549	ps
		t_{DIP}	1102	1157	2058	2160	2366	2476	ps
	8 mA (1)	t_{OP}	1044	1094	1853	1944	2130	2243	ps
		t_{DIP}	1002	1051	1798	1887	2067	2170	ps

Table 5–76. Stratix II I/O Output Delay for Row Pins (Part 2 of 3)

I/O Standard	Drive Strength	Parameter	Minimum Timing		-3 Speed Grade (2)	-3 Speed Grade (3)	-4 Speed Grade	-5 Speed Grade	Unit
			Industrial	Commercial					
2.5 V	4 mA	t_{OP}	1128	1183	2091	2194	2403	2523	ps
		t_{DIP}	1086	1140	2036	2137	2340	2450	ps
	8 mA	t_{OP}	1030	1080	1872	1964	2152	2265	ps
		t_{DIP}	988	1037	1817	1907	2089	2192	ps
	12 mA (1)	t_{OP}	1012	1061	1775	1862	2040	2151	ps
		t_{DIP}	970	1018	1720	1805	1977	2078	ps
1.8 V	2 mA	t_{OP}	1196	1253	2954	3100	3396	3542	ps
		t_{DIP}	1154	1210	2899	3043	3333	3469	ps
	4 mA	t_{OP}	1184	1242	2294	2407	2637	2763	ps
		t_{DIP}	1142	1199	2239	2350	2574	2690	ps
	6 mA	t_{OP}	1079	1131	2039	2140	2344	2462	ps
		t_{DIP}	1037	1088	1984	2083	2281	2389	ps
	8 mA (1)	t_{OP}	1049	1100	1942	2038	2232	2348	ps
		t_{DIP}	1007	1057	1887	1981	2169	2275	ps
1.5 V	2 mA	t_{OP}	1158	1213	2530	2655	2908	3041	ps
		t_{DIP}	1116	1170	2475	2598	2845	2968	ps
	4 mA	t_{OP}	1055	1106	2020	2120	2322	2440	ps
		t_{DIP}	1013	1063	1965	2063	2259	2367	ps
SSTL-2 Class I	8 mA	t_{OP}	1002	1050	1759	1846	2022	2104	ps
		t_{DIP}	960	1007	1704	1789	1959	2031	ps
SSTL-2 Class II	16 mA (1)	t_{OP}	947	992	1581	1659	1817	1897	ps
		t_{DIP}	905	949	1526	1602	1754	1824	ps
SSTL-18 Class I	4 mA	t_{OP}	990	1038	1709	1793	1964	2046	ps
		t_{DIP}	948	995	1654	1736	1901	1973	ps
	6 mA	t_{OP}	994	1042	1648	1729	1894	1975	ps
		t_{DIP}	952	999	1593	1672	1831	1902	ps
	8 mA	t_{OP}	970	1018	1633	1713	1877	1958	ps
		t_{DIP}	928	975	1578	1656	1814	1885	ps
	10 mA (1)	t_{OP}	974	1021	1615	1694	1856	1937	ps
		t_{DIP}	932	978	1560	1637	1793	1864	ps

Table 5–76. Stratix II I/O Output Delay for Row Pins (Part 3 of 3)

I/O Standard	Drive Strength	Parameter	Minimum Timing		-3 Speed Grade (2)	-3 Speed Grade (3)	-4 Speed Grade	-5 Speed Grade	Unit
			Industrial	Commercial					
1.8-V HSTL Class I	4 mA	t_{OP}	972	1019	1610	1689	1850	1956	ps
		t_{DIP}	930	976	1555	1632	1787	1883	ps
	6 mA	t_{OP}	975	1022	1580	1658	1816	1920	ps
		t_{DIP}	933	979	1525	1601	1753	1847	ps
	8 mA	t_{OP}	958	1004	1576	1653	1811	1916	ps
		t_{DIP}	916	961	1521	1596	1748	1843	ps
	10 mA	t_{OP}	962	1008	1567	1644	1801	1905	ps
		t_{DIP}	920	965	1512	1587	1738	1832	ps
	12 mA (1)	t_{OP}	953	999	1566	1643	1800	1904	ps
		t_{DIP}	911	956	1511	1586	1737	1831	ps
1.5-V HSTL Class I	4 mA	t_{OP}	970	1018	1591	1669	1828	1933	ps
		t_{DIP}	928	975	1536	1612	1765	1860	ps
	6 mA	t_{OP}	974	1021	1579	1657	1815	1919	ps
		t_{DIP}	932	978	1524	1600	1752	1846	ps
	8 mA (1)	t_{OP}	960	1006	1572	1649	1807	1911	ps
		t_{DIP}	918	963	1517	1592	1744	1838	ps
LVDS		t_{OP}	1018	1067	1723	1808	1980	2089	ps
		t_{DIP}	976	1024	1668	1751	1917	2016	ps
HyperTransport		t_{OP}	1005	1053	1723	1808	1980	2089	ps
		t_{DIP}	963	1010	1668	1751	1917	2016	ps

Notes to Table 5–76:

(1) This is the default setting in the Quartus II software.

(2) These numbers apply to -3 speed grade EP2S15, EP2S30, EP2S60, and EP2S90 devices.

(3) These numbers apply to -3 speed grade EP2S130 and EP2S180 devices.

Maximum Input & Output Clock Toggle Rate

Maximum clock toggle rate is defined as the maximum frequency achievable for a clock type signal at an I/O pin. The I/O pin can be a regular I/O pin or a dedicated clock I/O pin.

The maximum clock toggle rate is different from the maximum data bit rate. If the maximum clock toggle rate on a regular I/O pin is 300 MHz, the maximum data bit rate for dual data rate (DDR) could be potentially as high as 600 Mbps on the same I/O pin.

Table 5–77 specifies the maximum input clock toggle rates. Table 5–78 specifies the maximum output clock toggle rates at 0pF load. Table 5–79 specifies the derating factors for the output clock toggle rate for a non 0pF load.

To calculate the output toggle rate for a non 0pF load, use this formula:

The toggle rate for a non 0pF load

= 1000 / (1000/ toggle rate at 0pF load + derating factor * load value in pF /1000)

For example, the output toggle rate at 0pF load for SSTL-18 Class II 20mA I/O standard is 550 MHz on a -3 device clock output pin. The derating factor is 94ps/pF. For a 10pF load the toggle rate is calculated as:

$$1000 / (1000/550 + 94 \times 10 /1000) = 363 \text{ (MHz)}$$

Tables 5–77 through 5–79 show the I/O toggle rates for Stratix II devices.

Table 5–77. Maximum Input Toggle Rate on Stratix II Devices (Part 1 of 2)

Input I/O Standard	Column I/O Pins (MHz)			Row I/O Pins (MHz)			Dedicated Clock Inputs (MHz)		
	-3	-4	-5	-3	-4	-5	-3	-4	-5
LVTTL	500	500	450	500	500	450	500	500	400
2.5-V LVTTL/CMOS	500	500	450	500	500	450	500	500	400
1.8-V LVTTL/CMOS	500	500	450	500	500	450	500	500	400
1.5-V LVTTL/CMOS	500	500	450	500	500	450	500	500	400
LVCMOS	500	500	450	500	500	450	500	500	400
SSTL-2 Class I	500	500	500	500	500	500	500	500	500
SSTL-2 Class II	500	500	500	500	500	500	500	500	500
SSTL-18 Class I	500	500	500	500	500	500	500	500	500
SSTL-18 Class II	500	500	500	500	500	500	500	500	500
1.5-V HSTL Class I	500	500	500	500	500	500	500	500	500
1.5-V HSTL Class II	500	500	500	500	500	500	500	500	500
1.8-V HSTL Class I	500	500	500	500	500	500	500	500	500

Table 5–77. Maximum Input Toggle Rate on Stratix II Devices (Part 2 of 2)

Input I/O Standard	Column I/O Pins (MHz)			Row I/O Pins (MHz)			Dedicated Clock Inputs (MHz)		
	-3	-4	-5	-3	-4	-5	-3	-4	-5
1.8-V HSTL Class II	500	500	500	500	500	500	500	500	500
PCI *(1)*	500	500	450	-	-	-	500	500	400
PCI-X *(1)*	500	500	450	-	-	-	500	500	400
1.2-V HSTL *(2)*	280	-	-	-	-	-	280	-	-
Differential SSTL-2 Class I *(1)*, *(3)*	500	500	500	-	-	-	500	500	500
Differential SSTL-2 Class II *(1)*, *(3)*	500	500	500	-	-	-	500	500	500
Differential SSTL-18 Class I *(1)*, *(3)*	500	500	500	-	-	-	500	500	500
Differential SSTL-18 Class II *(1)*, *(3)*	500	500	500	-	-	-	500	500	500
1.8-V Differential HSTL Class I *(1)*, *(3)*	500	500	500	-	-	-	500	500	500
1.8-V Differential HSTL Class II *(1)*, *(3)*	500	500	500	-	-	-	500	500	500
1.5-V Differential HSTL Class I *(1)*, *(3)*	500	500	500	-	-	-	500	500	500
1.5-V Differential HSTL Class II *(1)*, *(3)*	500	500	500	-	-	-	500	500	500
HyperTransport technology *(4)*	-	-	-	520	520	420	717	717	640
LVPECL *(1)*	-	-	-	-	-	-	450	450	400
LVDS *(5)*	-	-	-	520	520	420	717	717	640
LVDS *(6)*	-	-	-	-	-	-	450	450	400

Notes to Table 5–77:

(1) Row clock inputs don't support PCI, PCI-X, LVPECL, and differential HSTL and SSTL standards.
(2) 1.2-V HSTL is only supported on column I/O pins.
(3) Differential HSTL and SSTL standards are only supported on column clock and DQS inputs.
(4) HyperTransport technology is only supported on row I/O and row dedicated clock input pins.
(5) These numbers apply to I/O pins and dedicated clock pins in the left and right I/O banks.
(6) These numbers apply to dedicated clock pins in the top and bottom I/O banks.

Table 5–78. Maximum Output Toggle Rate on Stratix II Devices (Part 1 of 5) *Note (1)*

I/O Standard	Drive Strength	Column I/O Pins (MHz)			Row I/O Pins (MHz)			Clock Outputs (MHz)		
		-3	-4	-5	-3	-4	-5	-3	-4	-5
3.3-V LVTTL	4 mA	270	225	210	270	225	210	270	225	210
	8 mA	435	355	325	435	355	325	435	355	325
	12 mA	580	475	420	580	475	420	580	475	420
	16 mA	720	594	520	-	-	-	720	594	520
	20 mA	875	700	610	-	-	-	875	700	610
	24 mA	1,030	794	670	-	-	-	1,030	794	670
3.3-V LVCMOS	4 mA	290	250	230	290	250	230	290	250	230
	8 mA	565	480	440	565	480	440	565	480	440
	12 mA	790	710	670	-	-	-	790	710	670
	16 mA	1,020	925	875	-	-	-	1,020	925	875
	20 mA	1,066	985	935	-	-	-	1,066	985	935
	24 mA	1,100	1,040	1,000	-	-	-	1,100	1,040	1,000
2.5-V LVTTL/LVCMOS	4 mA	230	194	180	230	194	180	230	194	180
	8 mA	430	380	380	430	380	380	430	380	380
	12 mA	630	575	550	630	575	550	630	575	550
	16 mA	930	845	820	-	-	-	930	845	820
1.8-V LVTTL/LVCMOS	2 mA	120	109	104	120	109	104	120	109	104
	4 mA	285	250	230	285	250	230	285	250	230
	6 mA	450	390	360	450	390	360	450	390	360
	8 mA	660	570	520	660	570	520	660	570	520
	10 mA	905	805	755	-	-	-	905	805	755
	12 mA	1,131	1,040	990	-	-	-	1,131	1,040	990
1.5-V LVTTL/LVCMOS	2 mA	244	200	180	244	200	180	244	200	180
	4 mA	470	370	325	470	370	325	470	370	325
	6 mA	550	430	375	-	-	-	550	430	375
	8 mA	625	495	420	-	-	-	625	495	420
SSTL-2 Class I	8 mA	400	300	300	-	-	-	400	300	300
	12 mA	400	400	350	400	350	350	400	400	350
SSTL-2 Class II	16 mA	350	350	300	350	350	300	350	350	300
	20 mA	400	350	350	-	-	-	400	350	350
	24 mA	400	400	350	-	-	-	400	400	350

Table 5–78. Maximum Output Toggle Rate on Stratix II Devices (Part 2 of 5) *Note (1)*

I/O Standard	Drive Strength	Column I/O Pins (MHz)			Row I/O Pins (MHz)			Clock Outputs (MHz)		
		-3	-4	-5	-3	-4	-5	-3	-4	-5
SSTL-18 Class I	4 mA	200	150	150	200	150	150	200	150	150
	6 mA	350	250	200	350	250	200	350	250	200
	8 mA	450	300	300	450	300	300	450	300	300
	10 mA	500	400	400	500	400	400	500	400	400
	12 mA	700	550	400	-	-	-	650	550	400
SSTL-18 Class II	8 mA	200	200	150	-	-	-	200	200	150
	16 mA	400	350	350	-	-	-	400	350	350
	18 mA	450	400	400	-	-	-	450	400	400
	20 mA	550	500	450	-	-	-	550	500	450
1.8-V HSTL Class I	4 mA	300	300	300	300	300	300	300	300	300
	6 mA	500	450	450	500	450	450	500	450	450
	8 mA	650	600	600	650	600	600	650	600	600
	10 mA	700	650	600	700	650	600	700	650	600
	12 mA	700	700	650	700	700	650	700	700	650
1.8-V HSTL Class II	16 mA	500	500	450	-	-	-	500	500	450
	18 mA	550	500	500	-	-	-	550	500	500
	20 mA	650	550	550	-	-	-	550	550	550
1.5-V HSTL Class I	4 mA	350	300	300	350	300	300	350	300	300
	6 mA	500	500	450	500	500	450	500	500	450
	8 mA	700	650	600	700	650	600	700	650	600
	10 mA	700	700	650	-	-	-	700	700	650
	12 mA	700	700	700	-	-	-	700	700	700
1.5-V HSTL Class II	16 mA	600	600	550	-	-	-	600	600	550
	18 mA	650	600	600	-	-	-	650	600	600
	20 mA	700	650	600	-	-	-	700	650	600
Differential SSTL-2 Class I *(3)*	8 mA	400	300	300	400	300	300	400	300	300
	12 mA	400	400	350	400	400	350	400	400	350
Differential SSTL-2 Class II *(3)*	16 mA	350	350	300	350	350	300	350	350	300
	20 mA	400	350	350	350	350	297	400	350	350
	24 mA	400	400	350	-	-	-	400	400	350

Table 5–78. Maximum Output Toggle Rate on Stratix II Devices (Part 3 of 5) *Note (1)*

I/O Standard	Drive Strength	Column I/O Pins (MHz)			Row I/O Pins (MHz)			Clock Outputs (MHz)		
		-3	-4	-5	-3	-4	-5	-3	-4	-5
Differential SSTL-18 Class I *(3)*	4 mA	200	150	150	200	150	150	200	150	150
	6 mA	350	250	200	350	250	200	350	250	200
	8 mA	450	300	300	450	300	300	450	300	300
	10 mA	500	400	400	500	400	400	500	400	400
	12 mA	700	550	400	350	350	297	650	550	400
Differential SSTL-18 Class II *(3)*	8 mA	200	200	150	-	-	-	200	200	150
	16 mA	400	350	350	-	-	-	400	350	350
	18 mA	450	400	400	-	-	-	450	400	400
	20 mA	550	500	450	-	-	-	550	500	450
1.8-V Differential HSTL Class I *(3)*	4 mA	300	300	300	-	-	-	300	300	300
	6 mA	500	450	450	-	-	-	500	450	450
	8 mA	650	600	600	-	-	-	650	600	600
	10 mA	700	650	600	-	-	-	700	650	600
	12 mA	700	700	650	-	-	-	700	700	650
1.8-V Differential HSTL Class II *(3)*	16 mA	500	500	450	-	-	-	500	500	450
	18 mA	550	500	500	-	-	-	550	500	500
	20 mA	650	550	550	-	-	-	550	550	550
1.5-V Differential HSTL Class I *(3)*	4 mA	350	300	300	-	-	-	350	300	300
	6 mA	500	500	450	-	-	-	500	500	450
	8 mA	700	650	600	-	-	-	700	650	600
	10 mA	700	700	650	-	-	-	700	700	650
	12 mA	700	700	700	-	-	-	700	700	700
1.5-V Differential HSTL Class II *(3)*	16 mA	600	600	550	-	-	-	600	600	550
	18 mA	650	600	600	-	-	-	650	600	600
	20 mA	700	650	600	-	-	-	700	650	600
3.3-V PCI		1,000	790	670	-	-	-	1,000	790	670
3.3-V PCI-X		1,000	790	670	-	-	-	1,000	790	670
LVDS *(6)*		-	-	-	500	500	500	450	400	300
HyperTransport technology *(4)*, *(6)*					500	500	500	-	-	-
LVPECL *(5)*		-	-	-	-	-	-	450	400	300
3.3-V LVTTL	OCT 50 Ω	400	400	350	400	400	350	400	400	350
2.5-V LVTTL	OCT 50 Ω	350	350	300	350	350	300	350	350	300

Table 5–78. Maximum Output Toggle Rate on Stratix II Devices (Part 4 of 5) *Note (1)*

I/O Standard	Drive Strength	Column I/O Pins (MHz)			Row I/O Pins (MHz)			Clock Outputs (MHz)		
		-3	-4	-5	-3	-4	-5	-3	-4	-5
1.8-V LVTTL	OCT 50 Ω	700	550	450	700	550	450	700	550	450
3.3-V LVCMOS	OCT 50 Ω	350	350	300	350	350	300	350	350	300
1.5-V LVCMOS	OCT 50 Ω	550	450	400	550	450	400	550	450	400
SSTL-2 Class I	OCT 50 Ω	600	500	500	600	500	500	600	500	500
SSTL-2 Class II	OCT 25 Ω	600	550	500	600	550	500	600	550	500
SSTL-18 Class I	OCT 50 Ω	560	400	350	590	400	350	450	400	350
SSTL-18 Class II	OCT 25 Ω	550	500	450	-	-	-	550	500	450
1.2-V HSTL *(2)*	OCT 50 Ω	280	-	-	-	-	-	280	-	-
1.5-V HSTL Class I	OCT 50 Ω	600	550	500	600	550	500	600	550	500
1.8-V HSTL Class I	OCT 50 Ω	650	600	600	650	600	600	650	600	600
1.8-V HSTL Class II	OCT 25 Ω	500	500	450	-	-	-	500	500	450
Differential SSTL-2 Class I	OCT 50 Ω	600	500	500	600	500	500	600	500	500
Differential SSTL-2 Class II	OCT 25 Ω	600	550	500	600	550	500	600	550	500
Differential SSTL-18 Class I	OCT 50 Ω	560	400	350	590	400	350	560	400	350
Differential SSTL-18 Class II	OCT 25 Ω	550	500	450	-	-	-	550	500	450
1.8-V Differential HSTL Class I	OCT 50 Ω	650	600	600	650	600	600	650	600	600
1.8-V Differential HSTL Class II	OCT 25 Ω	500	500	450	-	-	-	500	500	450
1.5-V Differential HSTL Class I	OCT 50 Ω	600	550	500	600	550	500	600	550	500

Table 5–78. Maximum Output Toggle Rate on Stratix II Devices (Part 5 of 5) *Note (1)*

I/O Standard	Drive Strength	Column I/O Pins (MHz)			Row I/O Pins (MHz)			Clock Outputs (MHz)		
		-3	-4	-5	-3	-4	-5	-3	-4	-5
1.2-V Differential HSTL	OCT 50 Ω	280	-	-	-	-	-	280	-	-

Notes to Table 5–78:

(1) The toggle rate applies to 0-pF output load for all I/O standards except for LVDS and HyperTransport technology on row I/O pins. For LVDS and HyperTransport technology on row I/O pins, the toggle rates apply to load from 0 to 5pF.

(2) 1.2-V HSTL is only supported on column I/O pins in I/O banks 4, 7, and 8.

(3) Differential HSTL and SSTL is only supported on column clock and DQS outputs.

(4) HyperTransport technology is only supported on row I/O and row dedicated clock input pins.

(5) LVPECL is only supported on column clock pins.

(6) Refer to Tables 5–81 through 5–91 if using SERDES block. Use the toggle rate values from the clock output column for PLL output.

Table 5–79. Maximum Output Clock Toggle Rate Derating Factors (Part 1 of 5)

I/O Standard	Drive Strength	Maximum Output Clock Toggle Rate Derating Factors (ps/pF)								
		Column I/O Pins			Row I/O Pins			Dedicated Clock Outputs		
		-3	-4	-5	-3	-4	-5	-3	-4	-5
3.3-V LVTTL	4 mA	478	510	510	478	510	510	466	510	510
	8 mA	260	333	333	260	333	333	291	333	333
	12 mA	213	247	247	213	247	247	211	247	247
	16 mA	136	197	197	-	-	-	166	197	197
	20 mA	138	187	187	-	-	-	154	187	187
	24 mA	134	177	177	-	-	-	143	177	177
3.3-V LVCMOS	4 mA	377	391	391	377	391	391	377	391	391
	8 mA	206	212	212	206	212	212	178	212	212
	12 mA	141	145	145	-	-	-	115	145	145
	16 mA	108	111	111	-	-	-	86	111	111
	20 mA	83	88	88	-	-	-	79	88	88
	24 mA	65	72	72	-	-	-	74	72	72
2.5-V LVTTL/LVCMOS	4 mA	387	427	427	387	427	427	391	427	427
	8 mA	163	224	224	163	224	224	170	224	224
	12 mA	142	203	203	142	203	203	152	203	203
	16 mA	120	182	182	-	-	-	134	182	182

Table 5–79. Maximum Output Clock Toggle Rate Derating Factors (Part 2 of 5)

I/O Standard	Drive Strength	Maximum Output Clock Toggle Rate Derating Factors (ps/pF)								
		Column I/O Pins			Row I/O Pins			Dedicated Clock Outputs		
		-3	-4	-5	-3	-4	-5	-3	-4	-5
1.8-V LVTTL/LVCMOS	2 mA	951	1421	1421	951	1421	1421	904	1421	1421
	4 mA	405	516	516	405	516	516	393	516	516
	6 mA	261	325	325	261	325	325	253	325	325
	8 mA	223	274	274	223	274	274	224	274	274
	10 mA	194	236	236	-	-	-	199	236	236
	12 mA	174	209	209	-	-	-	180	209	209
1.5-V LVTTL/LVCMOS	2 mA	652	963	963	652	963	963	618	963	963
	4 mA	333	347	347	333	347	347	270	347	347
	6 mA	182	247	247	-	-	-	198	247	247
	8 mA	135	194	194	-	-	-	155	194	194
SSTL-2 Class I	8 mA	364	680	680	364	680	680	350	680	680
	12 mA	163	207	207	163	207	207	188	207	207
SSTL-2 Class II	16 mA	118	147	147	118	147	147	94	147	147
	20 mA	99	122	122	-	-	-	87	122	122
	24 mA	91	116	116	-	-	-	85	116	116
SSTL-18 Class I	4 mA	458	570	570	458	570	570	505	570	570
	6 mA	305	380	380	305	380	380	336	380	380
	8 mA	225	282	282	225	282	282	248	282	282
	10 mA	167	220	220	167	220	220	190	220	220
	12 mA	129	175	175	-	-	-	148	175	175
SSTL-18 Class II	8 mA	173	206	206	-	-	-	155	206	206
	16 mA	150	160	160	-	-	-	140	160	160
	18 mA	120	130	130	-	-	-	110	130	130
	20 mA	109	127	127	-	-	-	94	127	127
SSTL-2 Class I	8 mA	364	680	680	364	680	680	350	680	680
	12 mA	163	207	207	163	207	207	188	207	207
SSTL-2 Class II	16 mA	118	147	147	118	147	147	94	147	147
	20 mA	99	122	122	-	-	-	87	122	122
	24 mA	91	116	116	-	-	-	85	116	116

Table 5–79. Maximum Output Clock Toggle Rate Derating Factors (Part 3 of 5)

I/O Standard	Drive Strength	Maximum Output Clock Toggle Rate Derating Factors (ps/pF)								
		Column I/O Pins			Row I/O Pins			Dedicated Clock Outputs		
		-3	-4	-5	-3	-4	-5	-3	-4	-5
SSTL-18 Class I	4 mA	458	570	570	458	570	570	505	570	570
	6 mA	305	380	380	305	380	380	336	380	380
	8 mA	225	282	282	225	282	282	248	282	282
	10 mA	167	220	220	167	220	220	190	220	220
	12 mA	129	175	175	-	-	-	148	175	175
SSTL-18 Class II	8 mA	173	206	206	-	-	-	155	206	206
	16 mA	150	160	160	-	-	-	140	160	160
	18 mA	120	130	130	-	-	-	110	130	130
	20 mA	109	127	127	-	-	-	94	127	127
1.8-V HSTL Class I	4 mA	245	282	282	245	282	282	229	282	282
	6 mA	164	188	188	164	188	188	153	188	188
	8 mA	123	140	140	123	140	140	114	140	140
	10 mA	110	124	124	110	124	124	108	124	124
	12 mA	97	110	110	97	110	110	104	110	110
1.8-V HSTL Class II	16 mA	101	104	104	-	-	-	99	104	104
	18 mA	98	102	102	-	-	-	93	102	102
	20 mA	93	99	99	-	-	-	88	99	99
1.5-V HSTL Class I	4 mA	168	196	196	168	196	196	188	196	196
	6 mA	112	131	131	112	131	131	125	131	131
	8 mA	84	99	99	84	99	99	95	99	99
	10 mA	87	98	98	-	-	-	90	98	98
	12 mA	86	98	98	-	-	-	87	98	98
1.5-V HSTL Class II	16 mA	95	101	101	-	-	-	96	101	101
	18 mA	95	100	100	-	-	-	101	100	100
	20 mA	94	101	101	-	-	-	104	101	101
Differential SSTL-2 Class II *(3)*	8 mA	364	680	680	-	-	-	350	680	680
	12 mA	163	207	207	-	-	-	188	207	207
	16 mA	118	147	147	-	-	-	94	147	147
	20 mA	99	122	122	-	-	-	87	122	122
	24 mA	91	116	116	-	-	-	85	116	116

Table 5–79. Maximum Output Clock Toggle Rate Derating Factors (Part 4 of 5)

I/O Standard	Drive Strength	Maximum Output Clock Toggle Rate Derating Factors (ps/pF)								
		Column I/O Pins			Row I/O Pins			Dedicated Clock Outputs		
		-3	-4	-5	-3	-4	-5	-3	-4	-5
Differential SSTL-18 Class I *(3)*	4 mA	458	570	570	-	-	-	505	570	570
	6 mA	305	380	380	-	-	-	336	380	380
	8 mA	225	282	282	-	-	-	248	282	282
	10 mA	167	220	220	-	-	-	190	220	220
	12 mA	129	175	175	-	-	-	148	175	175
Differential SSTL-18 Class II *(3)*	8 mA	173	206	206	-	-	-	155	206	206
	16 mA	150	160	160	-	-	-	140	160	160
	18 mA	120	130	130	-	-	-	110	130	130
	20 mA	109	127	127	-	-	-	94	127	127
1.8-V Differential HSTL Class I *(3)*	4 mA	245	282	282	-	-	-	229	282	282
	6 mA	164	188	188	-	-	-	153	188	188
	8 mA	123	140	140	-	-	-	114	140	140
	10 mA	110	124	124	-	-	-	108	124	124
	12 mA	97	110	110	-	-	-	104	110	110
1.8-V Differential HSTL Class II *(3)*	16 mA	101	104	104	-	-	-	99	104	104
	18 mA	98	102	102	-	-	-	93	102	102
	20 mA	93	99	99	-	-	-	88	99	99
1.5-V Differential HSTL Class I *(3)*	4 mA	168	196	196	-	-	-	188	196	196
	6 mA	112	131	131	-	-	-	125	131	131
	8 mA	84	99	99	-	-	-	95	99	99
	10 mA	87	98	98	-	-	-	90	98	98
	12 mA	86	98	98	-	-	-	87	98	98
1.5-V Differential HSTL Class II *(3)*	16 mA	95	101	101	-	-	-	96	101	101
	18 mA	95	100	100	-	-	-	101	100	100
	20 mA	94	101	101	-	-	-	104	101	101
3.3-V PCI		134	177	177	-	-	-	143	177	177
3.3-V PCI-X		134	177	177	-	-	-	143	177	177
LVDS		-	-	-	155 *(1)*	155 *(1)*	155 *(1)*	134	134	134
HyperTransport technology		-	-	-	155 *(1)*	155 *(1)*	155 *(1)*	-	-	-
LVPECL *(4)*		-	-	-	-	-	-	134	134	134

Table 5–79. Maximum Output Clock Toggle Rate Derating Factors (Part 5 of 5)

I/O Standard	Drive Strength	Maximum Output Clock Toggle Rate Derating Factors (ps/pF)								
		Column I/O Pins			Row I/O Pins			Dedicated Clock Outputs		
		-3	-4	-5	-3	-4	-5	-3	-4	-5
3.3-V LVTTL	OCT 50 Ω	133	152	152	133	152	152	147	152	152
2.5-V LVTTL	OCT 50 Ω	207	274	274	207	274	274	235	274	274
1.8-V LVTTL	OCT 50 Ω	151	165	165	151	165	165	153	165	165
3.3-V LVCMOS	OCT 50 Ω	300	316	316	300	316	316	263	316	316
1.5-V LVCMOS	OCT 50 Ω	157	171	171	157	171	171	174	171	171
SSTL-2 Class I	OCT 50 Ω	121	134	134	121	134	134	77	134	134
SSTL-2 Class II	OCT 25 Ω	56	101	101	56	101	101	58	101	101
SSTL-18 Class I	OCT 50 Ω	100	123	123	100	123	123	106	123	123
SSTL-18 Class II	OCT 25 Ω	61	110	110	-	-	-	59	110	110
1.2-V HSTL *(2)*	OCT 50 Ω	95	-	-	-	-	-	-	-	95

Notes to Table 5–79:

(1) For LVDS and HyperTransport technology output on row I/O pins, the toggle rate derating factors apply to loads larger than 5 pF. In the derating calculation, subtract 5 pF from the intended load value in pF for the correct result. For a load less than or equal to 5 pF, refer to Table 5–78 for output toggle rates.

(2) 1.2-V HSTL is only supported on column I/O pins in I/O banks 4,7, and 8.

(3) Differential HSTL and SSTL is only supported on column clock and DQS outputs.

(4) LVPECL is only supported on column clock outputs.

Duty Cycle Distortion

Duty cycle distortion (DCD) describes how much the falling edge of a clock is off from its ideal position. The ideal position is when both the clock high time (CLKH) and the clock low time (CLKL) equal half of the clock period (T), as shown in Figure 5–7. DCD is the deviation of the non-ideal falling edge from the ideal falling edge, such as D1 for the falling edge A and D2 for the falling edge B (Figure 5–7). The maximum DCD for a clock is the larger value of D1 and D2.

Figure 5–7. Duty Cycle Distortion

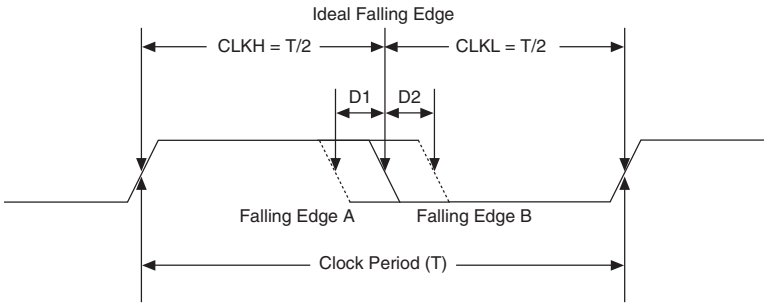

DCD expressed in absolution derivation, for example, D1 or D2 in Figure 5–7, is clock-period independent. DCD can also be expressed as a percentage, and the percentage number is clock-period dependent. DCD as a percentage is defined as

(T/2 – D1) / T (the low percentage boundary)

(T/2 + D2) / T (the high percentage boundary)

DCD Measurement Techniques

DCD is measured at an FPGA output pin driven by registers inside the corresponding I/O element (IOE) block. When the output is a single data rate signal (non-DDIO), only one edge of the register input clock (positive or negative) triggers output transitions (Figure 5–8). Therefore, any DCD present on the input clock signal or caused by the clock input buffer or different input I/O standard does not transfer to the output signal.

Figure 5–8. DCD Measurement Technique for Non-DDIO (Single-Data Rate) Outputs

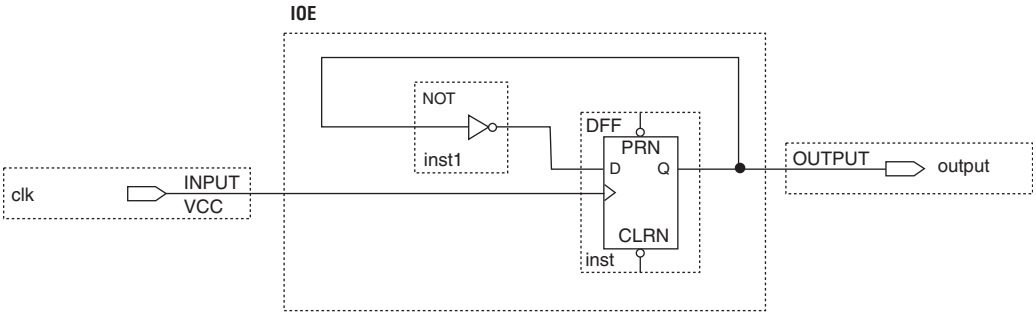

However, when the output is a double data rate input/output (DDIO) signal, both edges of the input clock signal (positive and negative) trigger output transitions (Figure 5–9). Therefore, any distortion on the input clock and the input clock buffer affect the output DCD.

Figure 5–9. DCD Measurement Technique for DDIO (Double-Data Rate) Outputs

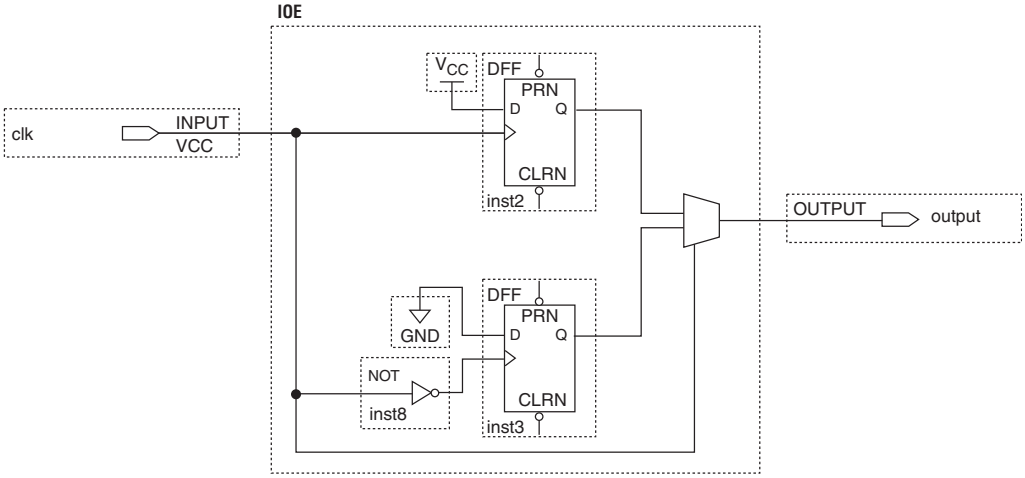

When an FPGA PLL generates the internal clock, the PLL output clocks the IOE block. As the PLL only monitors the positive edge of the reference clock input and internally re-creates the output clock signal, any DCD present on the reference clock is filtered out. Therefore, the DCD for a DDIO output with PLL in the clock path is better than the DCD for a DDIO output without PLL in the clock path.

Tables 5–80 through 5–87 give the maximum DCD in absolution derivation for different I/O standards on Stratix II devices. Examples are also provided that show how to calculate DCD as a percentage.

Table 5–80. Maximum DCD for Non-DDIO Output on Row I/O Pins (Part 1 of 2) *Note (1)*

Row I/O Output Standard	Maximum DCD for Non-DDIO Output		
	-3 Devices	-4 & -5 Devices	Unit
3.3-V LVTTTL	245	275	ps
3.3-V LVCMOS	125	155	ps
2.5 V	105	135	ps

Table 5–80. Maximum DCD for Non-DDIO Output on Row I/O Pins (Part 2 of 2) *Note (1)*

Row I/O Output Standard	Maximum DCD for Non-DDIO Output		
	-3 Devices	-4 & -5 Devices	Unit
1.8 V	180	180	ps
1.5-V LVCMOS	165	195	ps
SSTL-2 Class I	115	145	ps
SSTL-2 Class II	95	125	ps
SSTL-18 Class I	55	85	ps
1.8-V HSTL Class I	80	100	ps
1.5-V HSTL Class I	85	115	ps
LVDS/ HyperTransport technology	55	80	ps

Note to Table 5–80:

(1) The DCD specification is based on a no logic array noise condition.

Here is an example for calculating the DCD as a percentage for a non-DDIO output on a row I/O on a -3 device:

If the non-DDIO output I/O standard is SSTL-2 Class II, the maximum DCD is 95 ps (see Table 5–80). If the clock frequency is 267 MHz, the clock period T is:

$$T = 1/ f = 1 / 267 \text{ MHz} = 3.745 \text{ ns} = 3745 \text{ ps}$$

To calculate the DCD as a percentage:

$$(T/2 - DCD) / T = (3745ps/2 - 95ps) / 3745ps = 47.5\% \text{ (for low boundary)}$$

$$(T/2 + DCD) / T = (3745ps/2 + 95ps) / 3745ps = 52.5\% \text{ (for high boundary)}$$

Therefore, the DCD percentage for the 267 MHz SSTL-2 Class II non-DDIO row output clock on a –3 device ranges from 47.5% to 52.5%.

Table 5–81. Maximum DCD for Non-DDIO Output on Column I/O Pins *Note (1)*

Column I/O Output Standard I/O Standard	Maximum DCD for Non-DDIO Output		Unit
	-3 Devices	-4 & -5 Devices	
3.3-V LVTTL	190	220	ps
3.3-V LVCMOS	140	175	ps
2.5 V	125	155	ps
1.8 V	80	110	ps
1.5-V LVCMOS	185	215	ps
SSTL-2 Class I	105	135	ps
SSTL-2 Class II	100	130	ps
SSTL-18 Class I	90	115	ps
SSTL-18 Class II	70	100	ps
1.8-V HSTL Class I	80	110	ps
1.8-V HSTL Class II	80	110	ps
1.5-V HSTL Class I	85	115	ps
1.5-V HSTL Class II	50	80	ps
1.2-V HSTL *(2)*	170	-	ps
LVPECL	55	80	ps

Notes to Table 5–81:

(1) The DCD specification is based on a no logic array noise condition.

(2) 1.2-V HSTL is only supported in -3 devices.

Table 5–82. Maximum DCD for DDIO Output on Row I/O Pins Without PLL in the Clock Path for -3 Devices *Notes (1), (2)*

Row DDIO Output I/O Standard	Maximum DCD Based on I/O Standard of Input Feeding the DDIO Clock Port (No PLL in Clock Path)					Unit
	TTL/CMOS		SSTL-2	SSTL/HSTL	LVDS/ HyperTransport Technology	
	3.3 & 2.5 V	1.8 & 1.5 V	2.5 V	1.8 & 1.5 V	3.3 V	
3.3-V LVTTL	260	380	145	145	110	ps
3.3-V LVCMOS	210	330	100	100	65	ps
2.5 V	195	315	85	85	75	ps
1.8 V	150	265	85	85	120	ps
1.5-V LVCMOS	255	370	140	140	105	ps
SSTL-2 Class I	175	295	65	65	70	ps
SSTL-2 Class II	170	290	60	60	75	ps
SSTL-18 Class I	155	275	55	50	90	ps
1.8-V HSTL Class I	150	270	60	60	95	ps
1.5-V HSTL Class I	150	270	55	55	90	ps
LVDS/ HyperTransport technology	180	180	180	180	180	ps

Notes to Table 5–82:
(1) The information in Table 5–82 assumes the input clock has zero DCD.
(2) The DCD specification is based on a no logic array noise condition.

Here is an example for calculating the DCD in percentage for a DDIO output on a row I/O on a -3 device:

If the input I/O standard is SSTL-2 and the DDIO output I/O standard is SSTL-2 Class II, the maximum DCD is 60 ps (see Table 5–82). If the clock frequency is 267 MHz, the clock period T is:

$$T = 1/ f = 1 / 267 \text{ MHz} = 3.745 \text{ ns} = 3745 \text{ ps}$$

Calculate the DCD as a percentage:

$$(T/2 - DCD) / T = (3745ps/2 - 60ps) / 3745ps = 48.4\% \text{ (for low boundary)}$$

$$(T/2 + DCD) / T = (3745 ps/2 + 60 ps) / 3745ps = 51.6\% \text{ (for high boundary)}$$

Therefore, the DCD percentage for the 267 MHz SSTL-2 Class II DDIO row output clock on a –3 device ranges from 48.4% to 51.6%.

Table 5–83. Maximum DCD for DDIO Output on Row I/O Pins Without PLL in the Clock Path for -4 & -5 Devices *Notes (1), (2)*

Row DDIO Output I/O Standard	Maximum DCD Based on I/O Standard of Input Feeding the DDIO Clock Port (No PLL in the Clock Path)					Unit
	TTL/CMOS		SSTL-2	SSTL/HSTL	LVDS/ HyperTransport Technology	
	3.3/2.5 V	1.8/1.5 V	2.5 V	1.8/1.5 V	3.3 V	
3.3-V LVTTL	440	495	170	160	105	ps
3.3-V LVCMOS	390	450	120	110	75	ps
2.5 V	375	430	105	95	90	ps
1.8 V	325	385	90	100	135	ps
1.5-V LVCMOS	430	490	160	155	100	ps
SSTL-2 Class I	355	410	85	75	85	ps
SSTL-2 Class II	350	405	80	70	90	ps
SSTL-18 Class I	335	390	65	65	105	ps
1.8-V HSTL Class I	330	385	60	70	110	ps
1.5-V HSTL Class I	330	390	60	70	105	ps
LVDS/ HyperTransport technology	180	180	180	180	180	ps

Notes to Table 5–83:

(1) Table 5–83 assumes the input clock has zero DCD.

(2) The DCD specification is based on a no logic array noise condition.

Table 5–84. Maximum DCD for DDIO Output on Column I/O Pins Without PLL in the Clock Path for -3 Devices (Part 1 of 2) *Notes (1), (2)*

DDIO Column Output I/O Standard	Maximum DCD Based on I/O Standard of Input Feeding the DDIO Clock Port (No PLL in the Clock Path)					Unit
	TTL/CMOS		SSTL-2	SSTL/HSTL	1.2-V HSTL	
	3.3/2.5 V	1.8/1.5 V	2.5 V	1.8/1.5 V	1.2 V	
3.3-V LVTTL	260	380	145	145	145	ps
3.3-V LVCMOS	210	330	100	100	100	ps
2.5 V	195	315	85	85	85	ps

Table 5–84. Maximum DCD for DDIO Output on Column I/O Pins Without PLL in the Clock Path for -3 Devices (Part 2 of 2) *Notes (1), (2)*

DDIO Column Output I/O Standard	Maximum DCD Based on I/O Standard of Input Feeding the DDIO Clock Port (No PLL in the Clock Path)					Unit
	TTL/CMOS		SSTL-2	SSTL/HSTL	1.2-V HSTL	
	3.3/2.5 V	1.8/1.5 V	2.5 V	1.8/1.5 V	1.2 V	
1.8 V	150	265	85	85	85	ps
1.5-V LVCMOS	255	370	140	140	140	ps
SSTL-2 Class I	175	295	65	65	65	ps
SSTL-2 Class II	170	290	60	60	60	ps
SSTL-18 Class I	155	275	55	50	50	ps
SSTL-18 Class II	140	260	70	70	70	ps
1.8-V HSTL Class I	150	270	60	60	60	ps
1.8-V HSTL Class II	150	270	60	60	60	ps
1.5-V HSTL Class I	150	270	55	55	55	ps
1.5-V HSTL Class II	125	240	85	85	85	ps
1.2-V HSTL	240	360	155	155	155	ps
LVPECL	180	180	180	180	180	ps

Notes to Table 5–84:
(1) Table 5–84 assumes the input clock has zero DCD.
(2) The DCD specification is based on a no logic array noise condition.

Table 5–85. Maximum DCD for DDIO Output on Column I/O Pins Without PLL in the Clock Path for -4 & -5 Devices (Part 1 of 2) *Notes (1), (2)*

DDIO Column Output I/O Standard	Maximum DCD Based on I/O Standard of Input Feeding the DDIO Clock Port (No PLL in the Clock Path)				Unit
	TTL/CMOS		SSTL-2	SSTL/HSTL	
	3.3/2.5 V	1.8/1.5 V	2.5 V	1.8/1.5 V	
3.3-V LVTTL	440	495	170	160	ps
3.3-V LVCMOS	390	450	120	110	ps
2.5 V	375	430	105	95	ps
1.8 V	325	385	90	100	ps
1.5-V LVCMOS	430	490	160	155	ps
SSTL-2 Class I	355	410	85	75	ps
SSTL-2 Class II	350	405	80	70	ps

Table 5–85. Maximum DCD for DDIO Output on Column I/O Pins Without PLL in the Clock Path for -4 & -5 Devices (Part 2 of 2) *Notes (1), (2)*

DDIO Column Output I/O Standard	Maximum DCD Based on I/O Standard of Input Feeding the DDIO Clock Port (No PLL in the Clock Path)				Unit
	TTL/CMOS		SSTL-2	SSTL/HSTL	
	3.3/2.5 V	1.8/1.5 V	2.5 V	1.8/1.5 V	
SSTL-18 Class I	335	390	65	65	ps
SSTL-18 Class II	320	375	70	80	ps
1.8-V HSTL Class I	330	385	60	70	ps
1.8-V HSTL Class II	330	385	60	70	ps
1.5-V HSTL Class I	330	390	60	70	ps
1.5-V HSTL Class II	330	360	90	100	ps
1.2-V HSTL	420	470	155	165	ps
LVPECL	180	180	180	180	ps

Notes to Table 5–85:
(1) Table 5–85 assumes the input clock has zero DCD.
(2) The DCD specification is based on a no logic array noise condition.

Table 5–86. Maximum DCD for DDIO Output on Row I/O Pins with PLL in the Clock Path (Part 1 of 2) *Note (1)*

Row DDIO Output I/O Standard	Maximum DCD (PLL Output Clock Feeding DDIO Clock Port)		Unit
	-3 Device	-4 & -5 Device	
3.3-V LVTTL	110	105	ps
3.3-V LVCMOS	65	75	ps
2.5V	75	90	ps
1.8V	85	100	ps
1.5-V LVCMOS	105	100	ps
SSTL-2 Class I	65	75	ps
SSTL-2 Class II	60	70	ps
SSTL-18 Class I	50	65	ps
1.8-V HSTL Class I	50	70	ps
1.5-V HSTL Class I	55	70	ps

Table 5–86. Maximum DCD for DDIO Output on Row I/O Pins with PLL in the Clock Path (Part 2 of 2) *Note (1)*

Row DDIO Output I/O Standard	Maximum DCD (PLL Output Clock Feeding DDIO Clock Port)		Unit
	-3 Device	-4 & -5 Device	
LVDS/ HyperTransport technology	180	180	ps

Note to Table 5–86:
(1) The DCD specification is based on a no logic array noise condition.

Table 5–87. Maximum DCD for DDIO Output on Column I/O with PLL in the Clock Path *Note (1)*

Column DDIO Output I/O Standard	Maximum DCD (PLL Output Clock Feeding DDIO Clock Port)		Unit
	-3 Device	-4 & -5 Device	
3.3-V LVTTL	145	160	ps
3.3-V LVCMOS	100	110	ps
2.5V	85	95	ps
1.8V	85	100	ps
1.5-V LVCMOS	140	155	ps
SSTL-2 Class I	65	75	ps
SSTL-2 Class II	60	70	ps
SSTL-18 Class I	50	65	ps
SSTL-18 Class II	70	80	ps
1.8-V HSTL Class I	60	70	ps
1.8-V HSTL Class II	60	70	ps
1.5-V HSTL Class I	55	70	ps
1.5-V HSTL Class II	85	100	ps
1.2-V HSTL	155	-	ps
LVPECL	180	180	ps

Notes to Table 5–87:
(1) The DCD specification is based on a no logic array noise condition.
(2) 1.2-V HSTL is only supported in -3 devices.

High-Speed I/O Specifications

Table 5–88 provides high-speed timing specifications definitions.

Table 5–88. High-Speed Timing Specifications & Definitions

High-Speed Timing Specifications	Definitions
t_C	High-speed receiver/transmitter input and output clock period.
f_{HSCLK}	High-speed receiver/transmitter input and output clock frequency.
J	Deserialization factor (width of parallel data bus).
W	PLL multiplication factor.
t_{RISE}	Low-to-high transmission time.
t_{FALL}	High-to-low transmission time.
Timing unit interval (TUI)	The timing budget allowed for skew, propagation delays, and data sampling window. (TUI = 1/(Receiver Input Clock Frequency × Multiplication Factor) = t_C/w).
f_{HSDR}	Maximum/minimum LVDS data transfer rate (f_{HSDR} = 1/TUI), non-DPA.
$f_{HSDRDPA}$	Maximum/minimum LVDS data transfer rate ($f_{HSDRDPA}$ = 1/TUI), DPA.
Channel-to-channel skew (TCCS)	The timing difference between the fastest and slowest output edges, including t_{CO} variation and clock skew. The clock is included in the TCCS measurement.
Sampling window (SW)	The period of time during which the data must be valid in order to capture it correctly. The setup and hold times determine the ideal strobe position within the sampling window.
Input jitter	Peak-to-peak input jitter on high-speed PLLs.
Output jitter	Peak-to-peak output jitter on high-speed PLLs.
t_{DUTY}	Duty cycle on high-speed transmitter output clock.
t_{LOCK}	Lock time for high-speed transmitter and receiver PLLs.

Table 5–89 shows the high-speed I/O timing specifications for -3 speed grade Stratix II devices.

Table 5–89. High-Speed I/O Specifications for -3 Speed Grade (Part 1 of 2) *Notes (1), (2)*

Symbol	Conditions	-3 Speed Grade			Unit
		Min	Typ	Max	
f_{HSCLK} (clock frequency) $f_{HSCLK} = f_{HSDR}$ / W	W = 2 to 32 (LVDS, HyperTransport technology) *(3)*	16		520	MHz
	W = 1 (SERDES bypass, LVDS only)	16		500	MHz
	W = 1 (SERDES used, LVDS only)	150		717	MHz

Table 5–89. High-Speed I/O Specifications for -3 Speed Grade (Part 2 of 2) *Notes (1), (2)*

Symbol	Conditions			-3 Speed Grade			Unit
				Min	Typ	Max	
f_{HSDR} (data rate)	J = 4 to 10 (LVDS, HyperTransport technology)			150		1,040	Mbps
	J = 2 (LVDS, HyperTransport technology)			*(4)*		760	Mbps
	J = 1 (LVDS only)			*(4)*		500	Mbps
$f_{HSDRDPA}$ (DPA data rate)	J = 4 to 10 (LVDS, HyperTransport technology)			150		1,040	Mbps
TCCS	All differential standards			-		200	ps
SW	All differential standards			330		-	ps
Output jitter						190	ps
Output t_{RISE}	All differential I/O standards					160	ps
Output t_{FALL}	All differential I/O standards					180	ps
t_{DUTY}				45	50	55	%
DPA run length						6,400	UI
DPA jitter tolerance	Data channel peak-to-peak jitter			0.44			UI
DPA lock time	**Standard**	**Training Pattern**	**Transition Density**				Number of repetitions
	SPI-4	0000000000 1111111111	10%	256			
	Parallel Rapid I/O	00001111	25%	256			
		10010000	50%	256			
	Miscellaneous	10101010	100%	256			
		01010101		256			

Notes to Table 5–89:

(1) When J = 4 to 10, the SERDES block is used.

(2) When J = 1 or 2, the SERDES block is bypassed.

(3) The input clock frequency and the W factor must satisfy the following fast PLL VCO specification: 150 ≤ input clock frequency × W ≤ 1,040.

(4) The minimum specification is dependent on the clock source (fast PLL, enhanced PLL, clock pin, and so on) and the clock routing resource (global, regional, or local) utilized. The I/O differential buffer and input register do not have a minimum toggle rate.

Table 5–90 shows the high-speed I/O timing specifications for -4 speed grade Stratix II devices.

Table 5–90. High-Speed I/O Specifications for -4 Speed Grade *Notes (1), (2)*

Symbol	Conditions			-4 Speed Grade			Unit
				Min	Typ	Max	
f_{HSCLK} (clock frequency) $f_{HSCLK} = f_{HSDR} / W$	W = 2 to 32 (LVDS, HyperTransport technology) *(3)*			16		520	MHz
	W = 1 (SERDES bypass, LVDS only)			16		500	MHz
	W = 1 (SERDES used, LVDS only)			150		717	MHz
f_{HSDR} (data rate)	J = 4 to 10 (LVDS, HyperTransport technology)			150		1,040	Mbps
	J = 2 (LVDS, HyperTransport technology)			*(4)*		760	Mbps
	J = 1 (LVDS only)			*(4)*		500	Mbps
$f_{HSDRDPA}$ (DPA data rate)	J = 4 to 10 (LVDS, HyperTransport technology)			150		1,040	Mbps
TCCS	All differential standards			-		200	ps
SW	All differential standards			330		-	ps
Output jitter						190	ps
Output t_{RISE}	All differential I/O standards					160	ps
Output t_{FALL}	All differential I/O standards					180	ps
t_{DUTY}				45	50	55	%
DPA run length						6,400	UI
DPA jitter tolerance	Data channel peak-to-peak jitter			0.44			UI
DPA lock time	**Standard**	**Training Pattern**	**Transition Density**				Number of repetitions
	SPI-4	0000000000 1111111111	10%	256			
	Parallel Rapid I/O	00001111	25%	256			
		10010000	50%	256			
	Miscellaneous	10101010	100%	256			
		01010101		256			

Notes to Table 5–90:

(1) When J = 4 to 10, the SERDES block is used.

(2) When J = 1 or 2, the SERDES block is bypassed.

(3) The input clock frequency and the W factor must satisfy the following fast PLL VCO specification: 150 ≤ input clock frequency × W ≤ 1,040.

(4) The minimum specification is dependent on the clock source (fast PLL, enhanced PLL, clock pin, and so on) and the clock routing resource (global, regional, or local) utilized. The I/O differential buffer and input register do not have a minimum toggle rate.

Table 5–91 shows the high-speed I/O timing specifications for -5 speed grade Stratix II devices.

Table 5–91. High-Speed I/O Specifications for -5 Speed Grade *Notes (1), (2)*

Symbol	Conditions			-5 Speed Grade			Unit
				Min	Typ	Max	
f_{HSCLK} (clock frequency) $f_{HSCLK} = f_{HSDR} / W$	W = 2 to 32 (LVDS, HyperTransport technology) *(3)*			16		420	MHz
	W = 1 (SERDES bypass, LVDS only)			16		500	MHz
	W = 1 (SERDES used, LVDS only)			150		640	MHz
f_{HSDR} (data rate)	J = 4 to 10 (LVDS, HyperTransport technology)			150		840	Mbps
	J = 2 (LVDS, HyperTransport technology)			*(4)*		700	Mbps
	J = 1 (LVDS only)			*(4)*		500	Mbps
$f_{HSDRDPA}$ (DPA data rate)	J = 4 to 10 (LVDS, HyperTransport technology)			150		840	Mbps
TCCS	All differential I/O standards			-		200	ps
SW	All differential I/O standards			440		-	ps
Output jitter						190	ps
Output t_{RISE}	All differential I/O standards					290	ps
Output t_{FALL}	All differential I/O standards					290	ps
t_{DUTY}				45	50	55	%
DPA run length						6,400	UI
DPA jitter tolerance	Data channel peak-to-peak jitter			0.44			UI
DPA lock time	**Standard**	**Training Pattern**	**Transition Density**				Number of repetitions
	SPI-4	0000000000 1111111111	10%	256			
	Parallel Rapid I/O	00001111	25%	256			
		10010000	50%	256			
	Miscellaneous	10101010	100%	256			
		01010101		256			

Notes to Table 5–91:

(1) When J = 4 to 10, the SERDES block is used.

(2) When J = 1 or 2, the SERDES block is bypassed.

(3) The input clock frequency and the W factor must satisfy the following fast PLL VCO specification: 150 ≤ input clock frequency × W ≤ 1,040.

(4) The minimum specification is dependent on the clock source (fast PLL, enhanced PLL, clock pin, and so on) and the clock routing resource (global, regional, or local) utilized. The I/O differential buffer and input register do not have a minimum toggle rate.

PLL Timing Specifications

Tables 5–92 and 5–93 describe the Stratix II PLL specifications when operating in both the commercial junction temperature range (0 to 85 °C) and the industrial junction temperature range (–40 to 100 °C).

Table 5–92. Enhanced PLL Specifications (Part 1 of 2)

Name	Description	Min	Typ	Max	Unit
f_{IN}	Input clock frequency	2		500	MHz
f_{INPFD}	Input frequency to the PFD	2		420	MHz
f_{INDUTY}	Input clock duty cycle	40		60	%
$f_{EINDUTY}$	External feedback input clock duty cycle	40		60	%
$t_{INJITTER}$	Input or external feedback clock input jitter tolerance in terms of period jitter. Bandwidth ≤ 0.85 MHz		0.5		ns (p-p)
	Input or external feedback clock input jitter tolerance in terms of period jitter. Bandwidth > 0.85 MHz		1.0		ns (p-p)
$t_{OUTJITTER}$	Dedicated clock output period jitter			250 ps for ≥ 100 MHz `outclk` 25 mUI for < 100 MHz `outclk`	ps or mUI (p-p)
t_{FCOMP}	External feedback compensation time			10	ns
f_{OUT}	Output frequency for internal global or regional clock	1.5 *(2)*		550.0	MHz
$t_{OUTDUTY}$	Duty cycle for external clock output (when set to 50%).	45	50	55	%
$f_{SCANCLK}$	Scanclk frequency			100	MHz
$t_{CONFIGPLL}$	Time required to reconfigure scan chains for enhanced PLLs		$174/f_{SCANCLK}$		ns
f_{OUT_EXT}	PLL external clock output frequency	1.5 *(2)*		550.0 *(1)*	MHz

Table 5–92. Enhanced PLL Specifications (Part 2 of 2)

Name	Description	Min	Typ	Max	Unit
t_{LOCK}	Time required for the PLL to lock from the time it is enabled or the end of device configuration		0.03	1	ms
t_{DLOCK}	Time required for the PLL to lock dynamically after automatic clock switchover between two identical clock frequencies			1	ms
$f_{SWITCHOVER}$	Frequency range where the clock switchover performs properly	4		500	MHz
f_{CLBW}	PLL closed-loop bandwidth	0.13	1.20	16.90	MHz
f_{VCO}	PLL VCO operating range for –3 and –4 speed grade devices	300		1,040	MHz
	PLL VCO operating range for –5 speed grade devices	300		840	MHz
f_{SS}	Spread-spectrum modulation frequency	30		150	kHz
% spread	Percent down spread for a given clock frequency	0.4	0.5	0.6	%
t_{PLL_PSERR}	Accuracy of PLL phase shift			±15	ps
t_{ARESET}	Minimum pulse width on `areset` signal.	10			ns
$t_{ARESET_RECONFIG}$	Minimum pulse width on the `areset` signal when using PLL reconfiguration. Reset the PLL after `scandone` goes high.	500			ns

Notes to Table 5–92:

(1) Limited by I/O f_{MAX}. See Table 5–78 on page 5–69 for the maximum. Cannot exceed f_{OUT} specification.

(2) If the counter cascading feature of the PLL is utilized, there is no minimum output clock frequency.

Table 5–93. Fast PLL Specifications

Name	Description	Min	Typ	Max	Unit
f_{IN}	Input clock frequency (for -3 and -4 speed grade devices)	16.08		717	MHz
	Input clock frequency (for -5 speed grade devices)	16.08		640	MHz
f_{INPFD}	Input frequency to the PFD	16.08		500	MHz
f_{INDUTY}	Input clock duty cycle	40		60	%
$t_{INJITTER}$	Input clock jitter tolerance in terms of period jitter. Bandwidth ≤ 2 MHz		0.5		ns (p-p)
	Input clock jitter tolerance in terms of period jitter. Bandwidth > 2 MHz		1.0		ns (p-p)
f_{VCO}	Upper VCO frequency range for –3 and –4 speed grades	300		1,040	MHz
	Upper VCO frequency range for –5 speed grades	300		840	MHz
	Lower VCO frequency range for –3 and –4 speed grades	150		520	MHz
	Lower VCO frequency range for –5 speed grades	150		420	MHz
f_{OUT}	PLL output frequency to `GCLK` or `RCLK`	4.6875		550	MHz
	PLL output frequency to LVDS or DPA clock	150		1,040	MHz
f_{OUT_IO}	PLL clock output frequency to regular I/O pin	4.6875		*(1)*	MHz
$f_{SCANCLK}$	Scanclk frequency			100	MHz
$t_{CONFIGPLL}$	Time required to reconfigure scan chains for fast PLLs		$75/f_{SCANCLK}$		ns
f_{CLBW}	PLL closed-loop bandwidth	1.16	5.00	28.00	MHz
t_{LOCK}	Time required for the PLL to lock from the time it is enabled or the end of the device configuration		0.03	1.00	ms
t_{PLL_PSERR}	Accuracy of PLL phase shift			±15	ps
t_{ARESET}	Minimum pulse width on `areset` signal.	10			ns
$t_{ARESET_RECONFIG}$	Minimum pulse width on the `areset` signal when using PLL reconfiguration. Reset the PLL after `scandone` goes high.	500			ns

Note to Table 5–93:

(1) Limited by I/O f_{MAX}. See Table 5–77 on page 5–67 for the maximum.

External Memory Interface Specifications

Tables 5–94 through 5–101 contain Stratix II device specifications for the dedicated circuitry used for interfacing with external memory devices.

Table 5–94. DLL Frequency Range Specifications

Frequency Mode	Frequency Range	Resolution (Degrees)
0	100 to 175	30
1	150 to 230	22.5
2	200 to 310	30
3	240 to 400 (–3 speed grade)	36
	240 to 350 (–4 and –5 speed grades)	36

Table 5–95 lists the maximum delay in the fast timing model for the Stratix II DQS delay buffer. Multiply the number of delay buffers that you are using in the DQS logic block to get the maximum delay achievable in your system. For example, if you implement a 90° phase shift at 200 MHz, you use three delay buffers in mode 2. The maximum achievable delay from the DQS block is then 3 × .416 ps = 1.248 ns.

Table 5–95. DQS Delay Buffer Maximum Delay in Fast Timing Model

Frequency Mode	Maximum Delay Per Delay Buffer (Fast Timing Model)	Unit
0	0.833	ns
1, 2, 3	0.416	ns

Table 5–96. DQS Period Jitter Specifications for DLL-Delayed Clock (tDQS_JITTER) *Note (1)*

Number of DQS Delay Buffer Stages *(2)*	Commercial	Industrial	Unit
1	80	110	ps
2	110	130	ps
3	130	180	ps
4	160	210	ps

Notes to Table 5–96:

(1) Peak-to-peak period jitter on the phase shifted DQS clock.

(2) Delay stages used for requested DQS phase shift are reported in your project's Compilation Report in the Quartus II software.

Table 5–97. DQS Phase Jitter Specifications for DLL-Delayed Clock (tDQS PHASE_JITTER) Note (1)

Number of DQS Delay Buffer Stages (2)	DQS Phase Jitter	Unit
1	30	ps
2	60	ps
3	90	ps
4	120	ps

Notes to Table 5–97:

(1) Peak-to-peak phase jitter on the phase shifted DDS clock (digital jitter is caused by DLL tracking).

(2) Delay stages used for requested DQS phase shift are reported in your project's Compilation Report in the Quartus II software.

Table 5–98. DQS Phase-Shift Error Specifications for DLL-Delayed Clock (tDQS_PSERR) (1)

Number of DQS Delay Buffer Stages (2)	–3 Speed Grade	–4 Speed Grade	–5 Speed Grade	Unit
1	25	30	35	ps
2	50	60	70	ps
3	75	90	105	ps
4	100	120	140	ps

Notes to Table 5–98:

(1) This error specification is the absolute maximum and minimum error. For example, skew on three delay buffer stages in a C3 speed grade is 75 ps or ± 37.5 ps.

(2) Delay stages used for requested DQS phase shift are reported in your project's Compilation Report in the Quartus II software.

Table 5–99. DQS Bus Clock Skew Adder Specifications (tDQS_CLOCK_SKEW_ADDER)

Mode	DQS Clock Skew Adder	Unit
×4 DQ per DQS	40	ps
×9 DQ per DQS	70	ps
×18 DQ per DQS	75	ps
×36 DQ per DQS	95	ps

Note to Table 5–99:

(1) This skew specification is the absolute maximum and minimum skew. For example, skew on a ×4 DQ group is 40 ps or ±20 ps.

Table 5–100. DQS Phase Offset Delay Per Stage *Notes (1), (2), (3)*

Speed Grade	Min	Max	Unit
-3	9	14	ps
-4	9	14	ps
-5	9	15	ps

Notes to Table 5–100:
(1) The delay settings are linear.
(2) The valid settings for phase offset are -64 to +63 for frequency mode 0 and -32 to +31 for frequency modes 1, 2, and 3.
(3) The typical value equals the average of the minimum and maximum values.

Table 5–101. DDIO Outputs Half-Period Jitter *Notes (1), (2)*

Name	Description	Max	Unit
$t_{OUTHALFJITTER}$	Half-period jitter (PLL driving DDIO outputs)	200	ps

Notes to Table 5–101:
(1) The worst-case half period is equal to the ideal half period subtracted by the DCD and half-period jitter values.
(2) The half-period jitter was characterized using a PLL driving DDIO outputs.

JTAG Timing Specifications

Figure 5–10 shows the timing requirements for the JTAG signals.

Figure 5–10. Stratix II JTAG Waveforms

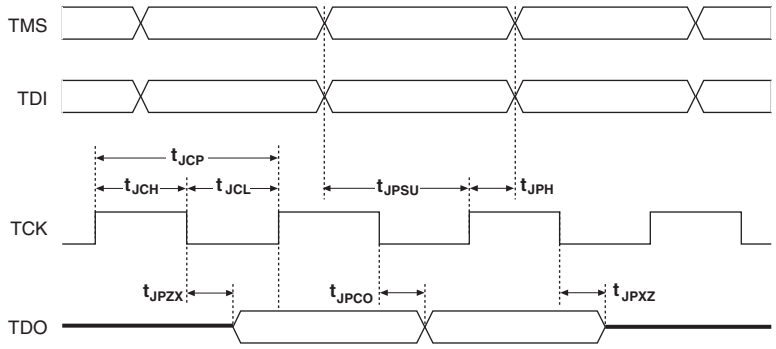

Table 5–102 shows the JTAG timing parameters and values for Stratix II devices.

Table 5–102. Stratix II JTAG Timing Parameters & Values

Symbol	Parameter	Min	Max	Unit
t_{JCP}	TCK clock period	30		ns
t_{JCH}	TCK clock high time	13		ns
t_{JCL}	TCK clock low time	13		ns
t_{JPSU}	JTAG port setup time	3		ns
t_{JPH}	JTAG port hold time	5		ns
t_{JPCO}	JTAG port clock to output		11 *(1)*	ns
t_{JPZX}	JTAG port high impedance to valid output		14 *(1)*	ns
t_{JPXZ}	JTAG port valid output to high impedance		14 *(1)*	ns

Note to Table 5–102:

(1) A 1 ns adder is required for each V_{CCIO} voltage step down from 3.3 V. For example, t_{JPCO} = 12 ns if V_{CCIO} of the TDO I/O bank = 2.5 V, or 13 ns if it equals 1.8 V.

Document Revision History

Table 5–103 shows the revision history for this chapter.

Table 5–103. Document Revision History (Part 1 of 3)

Date and Document Version	Changes Made	Summary of Changes
April 2011, v4.5	Updated Table 5–3.	Added operating junction temperature for military use.
July 2009, v4.4	Updated Table 5–92.	Updated the spread spectrum modulation frequency (f_{SS}) from (100 kHz–500 kHz) to (30 kHz–150 kHz).
May 2007, v4.3	• Updated R_{CONF} in Table 5–4. • Updated f_{IN} (min) in Table 5–92. • Updated f_{IN} and f_{INPFD} in Table 5–93.	—
	Moved the Document Revision History section to the end of the chapter.	—

Table 5–103. Document Revision History (Part 2 of 3)

Date and Document Version	Changes Made	Summary of Changes
August, 2006, v4.2	Updated Table 5–73, Table 5–75, Table 5–77, Table 5–78, Table 5–79, Table 5–81, Table 5–85, and Table 5–87.	—
April 2006, v4.1	• Updated Table 5–3. • Updated Table 5–11. • Updated Figures 5–8 and 5–9. • Added parallel on-chip termination information to "On-Chip Termination Specifications" section. • Updated Tables 5–28, 5–30,5–31, and 5–34. • Updated Table 5–78, Tables 5–81 through 5–90, and Tables 5–92, 5–93, and 5–98. • Updated "PLL Timing Specifications" section. • Updated "External Memory Interface Specifications" section. • Added Tables 5–95 and 5–101. • Updated "JTAG Timing Specifications" section, including Figure 5–10 and Table 5–102.	• Changed 0.2 MHz to 2 MHz in Table 5–93. • Added new spec for half period jitter (Table 5–101). • Added support for PLL clock switchover for industrial temperature range. • Changed f_{INPFD} (min) spec from 4 MHz to 2 MHz in Table 5–92. • Fixed typo in $t_{OUTJITTER}$ specification in Table 5–92. • Updated V_{DIF} AC & DC max specifications in Table 5–28. • Updated minimum values for t_{JCH}, t_{JCL}, and t_{JPSU} in Table 5–102. • Update maximum values for t_{JPCO}, t_{JPZX}, and t_{JPXZ} in Table 5–102.
December 2005, v4.0	• Updated "External Memory Interface Specifications" section. • Updated timing numbers throughout chapter.	—
July 2005, v3.1	• Updated HyperTransport technology information in Table 5–13. • Updated "Timing Model" section. • Updated "PLL Timing Specifications" section. • Updated "External Memory Interface Specifications" section.	—
May 2005, v3.0	• Updated tables throughout chapter. • Updated "Power Consumption" section. • Added various tables. • Replaced "Maximum Input & Output Clock Rate" section with "Maximum Input & Output Clock Toggle Rate" section. • Added "Duty Cycle Distortion" section. • Added "External Memory Interface Specifications" section.	—
March 2005, v2.2	Updated tables in "Internal Timing Parameters" section.	—
January 2005, v2.1	Updated input rise and fall time.	—

Table 5–103. Document Revision History (Part 3 of 3)

Date and Document Version	Changes Made	Summary of Changes
January 2005, v2.0	• Updated the “Power Consumption” section. • Added the “High-Speed I/O Specifications” and “On-Chip Termination Specifications” sections. • Removed the ESD Protection Specifications section. • Updated Tables 5–3 through 5–13, 5–16 through 5–18, 5–21, 5–35, 5–39, and 5–40. • Updated tables in “Timing Model” section. • Added Tables 5–30 and 5–31.	—
October 2004, v1.2	• Updated Table 5–3. • Updated introduction text in the “PLL Timing Specifications” section.	—
July 2004, v1.1	• Re-organized chapter. • Added typical values and C_{OUTFB} to Table 5–32. • Added undershoot specification to Note (4) for Tables 5–1 through 5–9. • Added Note (1) to Tables 5–5 and 5–6. • Added V_{ID} and V_{ICM} to Table 5–10. • Added “I/O Timing Measurement Methodology” section. • Added Table 5–72. • Updated Tables 5–1 through 5–2 and Tables 5–24 through 5–29.	—
February 2004, v1.0	Added document to the Stratix II Device Handbook.	—

6. Reference & Ordering Information

SII51006-2.2

Software

Stratix® II devices are supported by the Altera® Quartus® II design software, which provides a comprehensive environment for system-on-a-programmable-chip (SOPC) design. The Quartus II software includes HDL and schematic design entry, compilation and logic synthesis, full simulation and advanced timing analysis, SignalTap® II logic analyzer, and device configuration. See the *Quartus II Handbook* for more information on the Quartus II software features.

The Quartus II software supports the Windows XP/2000/NT/98, Sun Solaris, Linux Red Hat v7.1 and HP-UX operating systems. It also supports seamless integration with industry-leading EDA tools through the NativeLink® interface.

Device Pin-Outs

Device pin-outs for Stratix II devices are available on the Altera web site at (**www.altera.com**).

Ordering Information

Figure 6–1 describes the ordering codes for Stratix II devices. For more information on a specific package, refer to the *Package Information for Stratix II & Stratix II GX Devices* chapter in volume 2 of the *Stratix II Device Handbook* or the *Stratix II GX Device Handbook*.

Figure 6–1. Stratix II Device Packaging Ordering Information

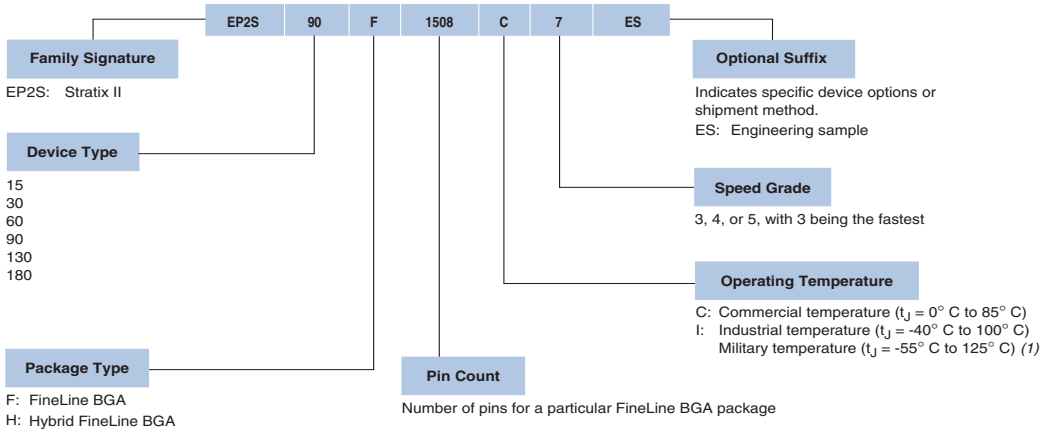

Note to Figure 6–1:

(1) Applicable to I4 devices. For more information, refer to the *Stratix II Military Temperature Range Support* technical brief.

Document Revision History

Table 6–1 shows the revision history for this chapter.

Table 6–1. Document Revision History

Date and Document Version	Changes Made	Summary of Changes
April 2011, v2.2	Updated Figure 6–1.	Added operating junction temperature for military use.
May 2007, v2.1	Moved the Document Revision History section to the end of the chapter.	—
January 2005, v2.0	Contact information was removed.	—
October 2004, v1.1	Updated Figure 6–1.	—
February 2004, v1.0	Added document to the Stratix II Device Handbook.	—

Looking for pricing, stock, or lifecycle information?

Click below to explore more details on WIN SOURCE:

- View EP2S60F484C4 on WIN SOURCE
- Intel Information

Optimize Your Supply Chain with WIN SOURCE Solutions

- Global Sourcing Solution
- Obsolete Management
- Cost Control Management
- Shortage Management
- Alternative Solution
- Excess Inventory Management