THE DATASHEET OF

PI6C4921506LIE

www.win-source.net 0086-755-83957316

A Product Line of
Diodes Incorporated

PI6C4921506

High Performance LVDS Fanout Buffer

Features

- 6 LVDS outputs
- Up to 1.5GHz output frequency
- Ultra low additive phase jitter: < 0.03 ps (typ) (differential 156.25MHz, 12KHz to 20MHz integration range)
- Single differential input
- Low delay from input to output (Tpd typ. < 1.5ns)
- Separate Input output supply voltage for level shifting
- 2.5V / 3.3V power supply
- Industrial temperature support
- Totally Lead-Free & Fully RoHS Compliant (Notes 1 & 2)
- Halogen and Antimony Free. “Green” Device (Note 3)
- For automotive applications requiring specific change control (i.e. parts qualified to AEC-Q100/101/200, PPAP capable, and manufactured in IATF 16949 certified facilities), please contact us or your local Diodes representative. https://www.diodes.com/quality/product-definitions/
- Packaging (Pb-free & Green):
  - 24-Pin, (TSSOP)

Description

The PI6C4921506 is a high performance fanout buffer device which supports up to 1.5GHz frequency. The device also uses Diodes' proprietary input detection technique to make sure illegal input conditions will be detected and reflected by output states. This device is ideal for systems that need to distribute low jitter clock signals to multiple destinations.

Applications

- Networking systems including switches and Routers
- High frequency backplane based computing and telecom platforms

Block Diagram

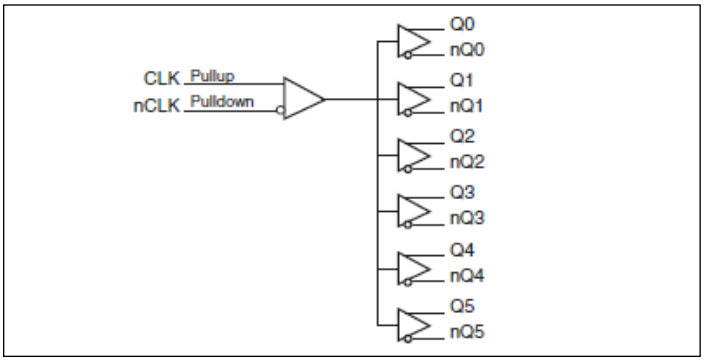

Notes:

1. No purposely added lead. Fully EU Directive 2002/95/EC (RoHS), 2011/65/EU (RoHS 2) & 2015/863/EU (RoHS 3) compliant.
2. See https://www.diodes.com/quality/lead-free/ for more information about Diodes Incorporated’s definitions of Halogen- and Antimony-free, "Green" and Lead-free.
3. Halogen- and Antimony-free "Green” products are defined as those which contain <900ppm bromine, <900ppm chlorine (<1500ppm total Br + Cl) and <1000ppm antimony compounds.

Pin Configuration

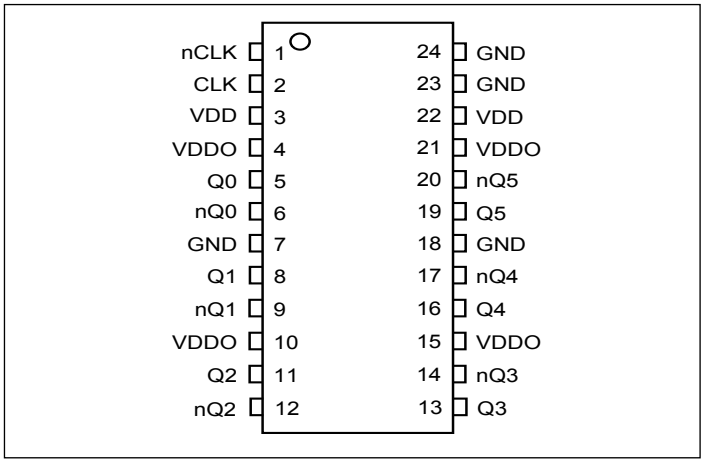

Pin Description

Pin #	Pin Name	Type	Description
1, 2	nCLK CLK	Input	Differential clock input
3, 22	V_{DD}	Power	Power supply
4, 10, 15, 21	V_{DDO}	Power	IO power supply
5, 6	Q0 nQ0	Output	LVDS output clock
7, 18, 23, 24	GND	Power	Ground
8, 9	Q1 nQ1	Output	LVDS output clock
11, 12	Q2 nQ2	Output	LVDS output clock
13, 14	Q3 nQ3	Output	LVDS output clock
16, 17	Q4 nQ4	Output	LVDS output clock
19, 20	Q5 nQ5	Output	LVDS output clock

Clock Input Function Table

Inputs		Outputs		Input to Output Mode	Polarity
CLK	nCLK	Q0:Q5	nQ0:nQ5		
0	1	LOW	HIGH	Differential to Differential	Non Inverting
1	0	HIGH	LOW	Differential to Differential	Non Inverting
0	Biased	LOW	HIGH	Single Ended to Differential	Non Inverting
1	Biased	HIGH	LOW	Single Ended to Differential	Non Inverting
Biased	0	HIGH	LOW	Single Ended to Differential	Inverting
Biased	1	LOW	HIGH	Single Ended to Differential	Inverting

® Diodes Incorporated

Maximum Ratings (Above which the useful life may be impaired. For user guidelines, not tested)

Supply Voltage, V_{DD} 4.65V
Inputs, V_I ..... 0.5V to V_{DD} +0.5V
Outputs, I_O (LVDS)
Continuous Current 10mA
Surge Current 15mA
Package Thermal Impedance, Θ_{JA} ..... 70°C/W (0 mps)
Storage temperature, T_{STG} (Junction-to-Ambient)..... -65 to +150°C

Note:

Stresses greater than those listed under MAXIMUM RATINGS may cause permanent damage to the device. This is a stress rating only and functional operation of the device at these or any other conditions above those indicated in the operational sections of this specification is not implied. Exposure to absolute maximum rating conditions for extended periods may affect reliability.

Power Supply DC Characteristics (V_{DD} = V_{DDO} = 3.3V±5%, T_A = -40°C to 85°C)

Symbol	Parameter	Test Condition	Min.	Typ.	Max.	Units
V_{DD}	Positive Supply Voltage		3.135	3.3	3.465	V
V_{DDO}	Output Supply Voltage		3.135	3.3	3.465	V
I_{DD}	Power Supply Current				70	mA
I_{DDO}	Output Supply Current				100	mA

Power Supply DC Characteristics (V_{DD} = V_{DDO} = 2.5V±5%, T_A = -40°C to 85°C)

Symbol	Parameter	Test Condition	Min.	Typ.	Max.	Units
V_{DD}	Positive Supply Voltage		2.375	2.5	2.625	V
V_{DDO}	Output Supply Voltage		2.375	2.5	2.625	V
I_{DD}	Power Supply Current				65	mA
I_{DDO}	Output Supply Current				102	mA

Differential DC Characteristics (V_{DD} = V_{DDO} = 3.3V±5% or 2.5V±5%, T_A = -40°C to 85°C)

Symbol	Parameter		Test Condition	Min.	Typ.	Max.	Units
I_{IH}	Input High Current	CLK	$V_{IN} = V_{DD}$			10	µA
		nCLK	$V_{IN} = V_{DD}$			150	µA
I_{IL}	Input Low Current	CLK	V_{IN} = 0V	-150			µA
		nCLK	V_{IN} = 0V	-10			µA
V_{PP}	Peak-to-Peak Input Voltage[1]			0.15		1.3	V
V_{CMR}	Common Mode Input Voltage[1, 2]			GND+0.5		V_{DD}-0.85	V

Note:

1. VIL should not be less than -0.3V
2. Common mode voltage is defined as VH

LVDS DC Characteristics (V_{DD} = V_{DDO} = 3.3V±5%, T_A = -40°C to 85°C)

Symbol	Parameter	Test Condition	Min.	Typ.	Max.	Units
V_{OD}	Differential Output Voltage		326		526	mV
ΔV_{OD}	V_{OD} Magnitude Change				50	mV
V_{OS}	Offset Voltage		1.2		1.3	V
ΔV_{OS}	V_{OS} Magnitude Change				50	mV

Note:
Please refer to Parameter Measurement Information for output information.

LVDS DC Characteristics (V_{DD} = V_{DDO} = 2.5V±5%, T_A = -40°C to 85°C)

Symbol	Parameter	Test Condition	Min.	Typ.	Max.	Units
V_{OD}	Differential Output Voltage		305		505	mV
ΔV_{OD}	V_{OD} Magnitude Change				50	mV
V_{OS}	Offset Voltage		1.15		1.3	V
ΔV_{OS}	V_{OS} Magnitude Change				50	mV

Note:
Please refer to Parameter Measurement Information for output information.

AC Characteristics (V_{DD} = V_{DDO} = 3.3V±5%, T_A = -40°C to 85°C)

Symbol	Parameter	Test Condition	Min.	Typ.	Max.	Units
f_{MAX}	Output Frequency				1.5	GHz
t_{PD}	Propagation Delay(1)		800		1100	ps
$t_{sk(o)}$	Output Skew(2, 3)				55	ps
t_{jit}	Buffer Additive Phase Jitter, RMS	622.08MHz, Integration Range: 12kHz – 20MHz		0.067		ps
t_R / t_F	Output Rise/Fall Time	20% to 80%	50		250	ps
odc	Output Duty Cycle	≤ 622MHz	47		53	%

Note:

Electrical parameters are guaranteed over the specified ambient operating temperature range, which is established when the device is mounted in a test socket with maintained transverse airflow greater than 500 lfpm. The device will meet specifications after thermal equilibrium has been reached under these conditions.

1. Measured from the differential input crossing point to the differential output crossing point.
2. Defined as skew between outputs at the same supply voltage and with equal load conditions. Measured from at the output differential cross points.
3. This parameter is defined in accordance with JEDEC Standard 65.

AC Characteristics (V_{DD} = V_{DDO} = 2.5V±5%, T_A = -40°C to 85°C)

Symbol	Parameter	Test Condition	Min.	Typ.	Max.	Units
f_{MAX}	Output Frequency				1.5	GHz
t_{PD}	Propagation Delay(1)		800		1200	ps
$t_{sk(o)}$	Output Skew(2, 3)				55	ps
t_{jit}	Buffer Additive Phase Jitter, RMS	622.08MHz,Integration Range: 12kHz – 20MHz		0.067		ps
t_R / t_F	Output Rise/Fall Time	20% to 80%	50		250	ps
odc	Output Duty Cycle	≤ 622MHz	47		53	%

® Diodes Incorporated

Propagation Delay T_{PD}

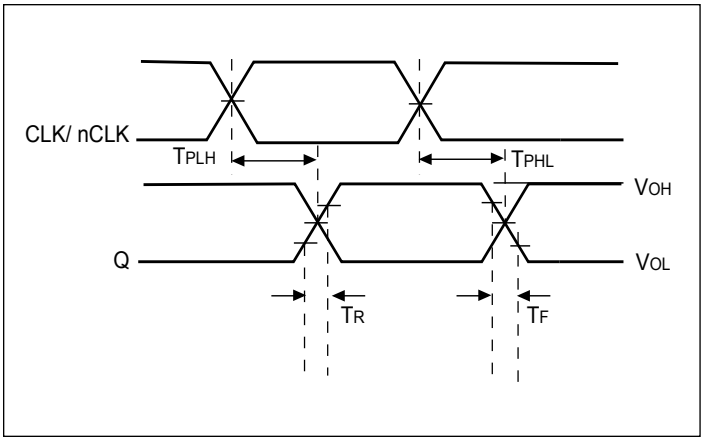

Output Skew

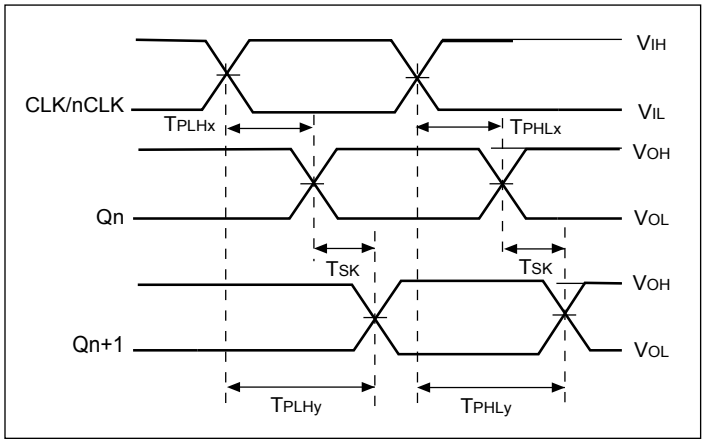

Part to Part Skew

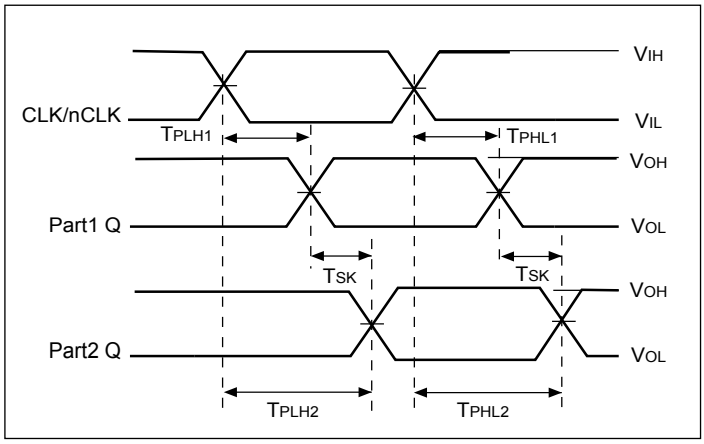

Configuration Test Load Board Termination for LVDS Outputs

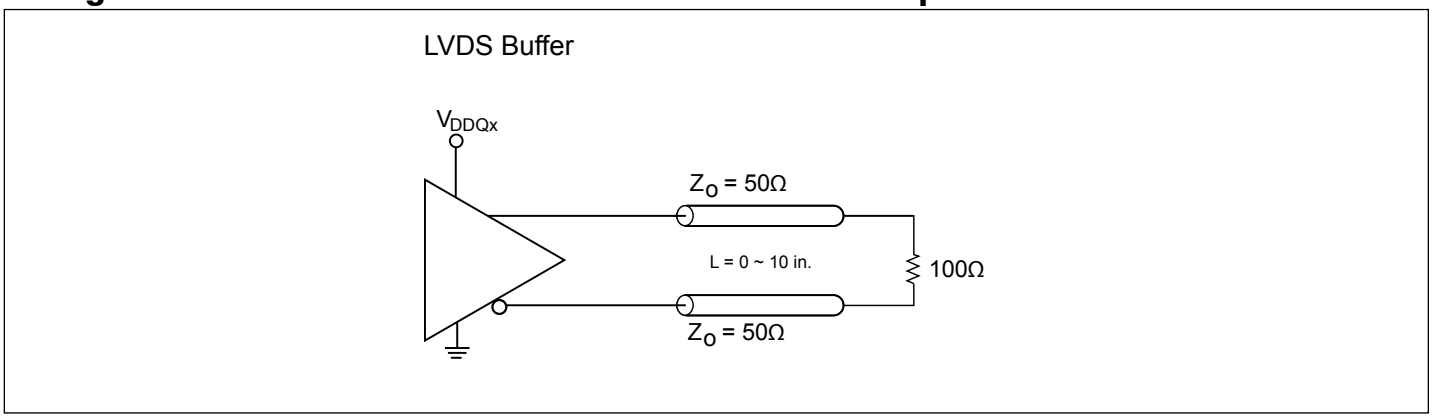

Part Marking

PI6C492
1506LIE
YYWWXX̄

YY: Year
WW: Workweek
1st X: Assembly Code
2nd X: Fab Code

® Diodes Incorporated

Packaging Mechanical: 24-TSSOP (L)

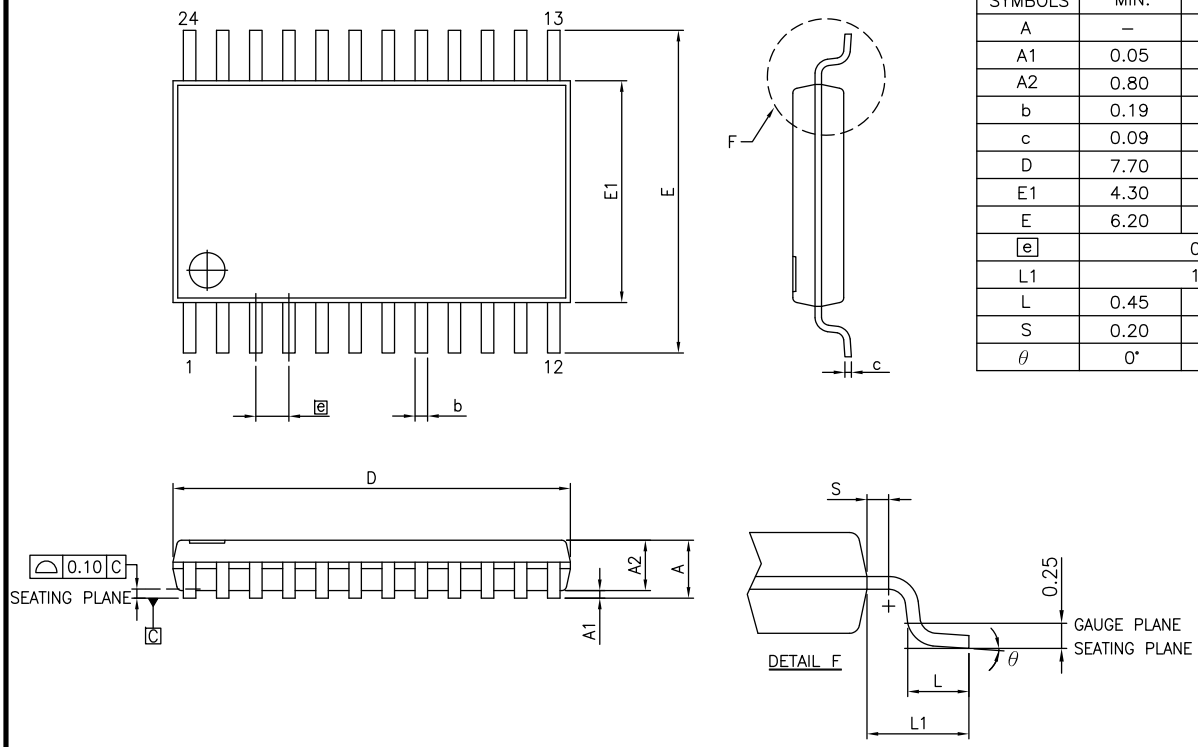

SYMBOLS	MIN.	NOM.	MAX.
A	–	–	1.20
A1	0.05	–	0.15
A2	0.80	1.00	1.05
b	0.19	–	0.30
c	0.09	–	0.20
D	7.70	7.80	7.90
E1	4.30	4.40	4.50
E	6.20	6.40	6.60
e	0.65 BSC		
L1	1.00 REF		
L	0.45	0.60	0.75
S	0.20	–	–
θ	0°	–	8°

NOTES:
1. ALL DIMENSIONS IN MILLIMETERS. ANGLES IN DEGREES.
2. JEDEC MO–153F
3. DIMENSIONS DOES NOT INCLUDE MOLD FLASH, PROTRUSIONS OR GATE BURRS.

PERICOM Enabling Serial Connectivity

DATE: 03/31/16

DESCRIPTION: 24-Pin, 173mil Wide TSSOP

PACKAGE CODE: L (L24)

DOCUMENT CONTROL #: PD-1312 REVISION: G

16-0075

For latest package info.

please check: http://www.diodes.com/design/support/packaging/pericom-packaging/packaging-mechanicals-and-thermal-characteristics/

Ordering Information

Ordering Number	Package Code	Package Description
PI6C4921506LIEX	L	24-Pin, 173mil Wide (TSSOP)

Notes:

1. No purposely added lead. Fully EU Directive 2002/95/EC (RoHS), 2011/65/EU (RoHS 2) & 2015/863/EU (RoHS 3) compliant.
2. See https://www.diodes.com/quality/lead-free/ for more information about Diodes Incorporated's definitions of Halogen- and Antimony-free, "Green" and Lead-free.
3. Halogen- and Antimony-free "Green" products are defined as those which contain <900ppm bromine, <900ppm chlorine (<1500ppm total Br + Cl) and <1000ppm antimony compounds.
4. I = Industrial
5. E = Pb-free and Green
6. X suffix = Tape/Reel

IMPORTANT NOTICE

1. DIODES INCORPORATED AND ITS SUBSIDIARIES ("DIODES") MAKE NO WARRANTY OF ANY KIND, EXPRESS OR IMPLIED, WITH REGARDS TO ANY INFORMATION CONTAINED IN THIS DOCUMENT, INCLUDING, BUT NOT LIMITED TO, THE IMPLIED WARRANTIES OF MERCHANTABILITY, FITNESS FOR A PARTICULAR PURPOSE OR NON-INFRINGEMENT OF THIRD PARTY INTELLECTUAL PROPERTY RIGHTS (AND THEIR EQUIVALENTS UNDER THE LAWS OF ANY JURISDICTION).

2. The Information contained herein is for informational purpose only and is provided only to illustrate the operation of Diodes products described herein and application examples. Diodes does not assume any liability arising out of the application or use of this document or any product described herein. This document is intended for skilled and technically trained engineering customers and users who design with Diodes products. Diodes products may be used to facilitate safety-related applications; however, in all instances customers and users are responsible for (a) selecting the appropriate Diodes products for their applications, (b) evaluating the suitability of the Diodes products for their intended applications, (c) ensuring their applications, which incorporate Diodes products, comply the applicable legal and regulatory requirements as well as safety and functional-safety related standards, and (d) ensuring they design with appropriate safeguards (including testing, validation, quality control techniques, redundancy, malfunction prevention, and appropriate treatment for aging degradation) to minimize the risks associated with their applications.

3. Diodes assumes no liability for any application-related information, support, assistance or feedback that may be provided by Diodes from time to time. Any customer or user of this document or products described herein will assume all risks and liabilities associated with such use, and will hold Diodes and all companies whose products are represented herein or on Diodes' websites, harmless against all damages and liabilities.

4. Products described herein may be covered by one or more United States, international or foreign patents and pending patent applications. Product names and markings noted herein may also be covered by one or more United States, international or foreign trademarks and trademark applications. Diodes does not convey any license under any of its intellectual property rights or the rights of any third parties (including third parties whose products and services may be described in this document or on Diodes' website) under this document.

5. Diodes products are provided subject to Diodes' Standard Terms and Conditions of Sale (https://www.diodes.com/about/company/terms-and-conditions/terms-and-conditions-of-sales/) or other applicable terms. This document does not alter or expand the applicable warranties provided by Diodes. Diodes does not warrant or accept any liability whatsoever in respect of any products purchased through unauthorized sales channel.

6. Diodes products and technology may not be used for or incorporated into any products or systems whose manufacture, use or sale is prohibited under any applicable laws and regulations. Should customers or users use Diodes products in contravention of any applicable laws or regulations, or for any unintended or unauthorized application, customers and users will (a) be solely responsible for any damages, losses or penalties arising in connection therewith or as a result thereof, and (b) indemnify and hold Diodes and its representatives and agents harmless against any and all claims, damages, expenses, and attorney fees arising out of, directly or indirectly, any claim relating to any noncompliance with the applicable laws and regulations, as well as any unintended or unauthorized application.

7. While efforts have been made to ensure the information contained in this document is accurate, complete and current, it may contain technical inaccuracies, omissions and typographical errors. Diodes does not warrant that information contained in this document is error-free and Diodes is under no obligation to update or otherwise correct this information. Notwithstanding the foregoing, Diodes reserves the right to make modifications, enhancements, improvements, corrections or other changes without further notice to this document and any product described herein. This document is written in English but may be translated into multiple languages for reference. Only the English version of this document is the final and determinative format released by Diodes.

8. Any unauthorized copying, modification, distribution, transmission, display or other use of this document (or any portion hereof) is prohibited. Diodes assumes no responsibility for any losses incurred by the customers or users or any third parties arising from any such unauthorized use.

Copyright © 2021 Diodes Incorporated

www.diodes.com

Looking for pricing, stock, or lifecycle information?

Click below to explore more details on WIN SOURCE:

- View PI6C4921506LIE on WIN SOURCE
- Diodes Incorporated Information

Optimize Your Supply Chain with WIN SOURCE Solutions

- Global Sourcing Solution
- Obsolete Management
- Cost Control Management
- Shortage Management
- Alternative Solution
- Excess Inventory Management