THE DATASHEET OF

MOC8021

www.win-source.net 0086-755-83957316

PHOTODARLINGTON OPTOCOUPLERS (NO BASE CONNECTION)

MOC8020 MOC8021

DESCRIPTION

The MOC8020 and MOC8021 are photodarlington-type optically coupled optocouplers. The devices have a gallium arsenide infrared emitting diode coupled with a silicon darlington phototransistor.

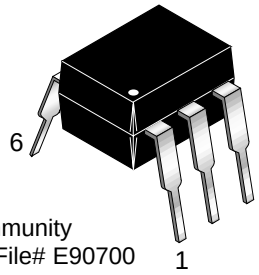

FEATURES

- High current transfer ratio
  - -500% (MOC8020)
  - -1000% (MOC8021)
- No base connection for improved noise immunity
- Underwriters Laboratory (UL) recognized File# E90700

APPLICATIONS

- Appliances, measuring instruments
- I/O interface for computers
- Programmable controllers
- Portable electronics
- Interfacing and coupling systems of different potentials and impedance
- Solid state relays

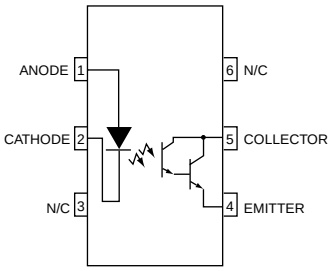

PACKAGE DIMENSIONS

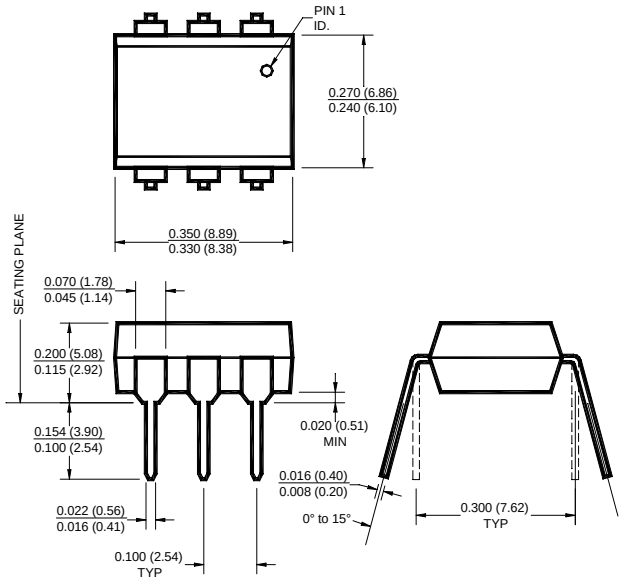

NOTE
All dimensions are in inches (millimeters)

ABSOLUTE MAXIMUM RATINGS (T_A = 25°C Unless otherwise specified.)

Parameter	Symbol	Value	Units
TOTAL DEVICE			
Storage Temperature	T_{STG}	-55 to +150	°C
Operating Temperature	T_{OPR}	-55 to +100	°C
Lead Solder Temperature	T_{SOL}	260 for 10 sec	°C
Total Device Power Dissipation @ T_A = 25°C	P_D	250	mW
Derate above 25°C		2.94	mW/°C
Input-Output Isolation Voltage	V_{ISO}	5300	Vac(rms)
EMITTER			
DC/Average Forward Input Current	I_F	60	mA
Reverse Input Voltage	V_R	3	V
LED Power Dissipation @ T_A = 25°C	P_D	120	mW
Derate above 25°C		1.41	mW/°C
DETECTOR			
Collector-Emitter Voltage	V_{CEO}	50	V
Detector Power Dissipation @ T_A = 25°C	P_D	150	mW
Derate above 25°C		1.76	mW/°C
Continuous Collector Current	I_C	150	mA

© 2001 Fairchild Semiconductor Corporation

ELECTRICAL CHARACTERISTICS (T_A = 25°C Unless otherwise specified.)

INDIVIDUAL COMPONENT CHARACTERISTICS

Parameter	Test Conditions	Symbol	Min	Typ**	Max	Unit
EMITTER						
Input Forward Voltage	(I_F = 10 mA)	V_F		1.15	2	V
Input Capacitance	(V_F = 0, f = 1 MHz)	C_{IN}		18		pF
Reverse Leakage Current	(V_R = 3.0 V)	I_R		0.05	10	µA
DETECTOR						
Collector-Emitter Breakdown Voltage	(I_C = 1.0 mA)	BV_{CEO}	50			V
Emitter-Collector Breakdown Voltage	(I_E = 100 µA)	BV_{ECO}	5			V
Collector-Emitter Dark Current	(V_{CE} = 10 V)	I_{CEO}			100	nA

TRANSFER CHARACTERISTICS

DC Characteristic		Test Conditions	Symbol	Min	Typ**	Max	Units
Current Transfer Ratio, Collector-Emitter	MOC8020	(I_F = 10 mA, V_{CE} = 5 V)	CTR	500			%
	MOC8021	(I_F = 10 mA, V_{CE} = 5 V)		1000			
Collector-Emitter Saturation Voltage		(I_F = 10 mA, I_C = 25 mA)	$V_{CE(SAT)}$			2	V

TRANSFER CHARACTERISTICS

Characteristic	Test Conditions	Symbol	Min	Typ**	Max	Units
SWITCHING TIMES						
Turn-on Time	(V_{CC}= 10 V, R_L = 100Ω, I_F = 5 mA)	t_{on}		3.5		µs
Turn-off Time		t_{off}		95		µs

ISOLATION CHARACTERISTICS

Characteristic	Test Conditions	Symbol	Min	Typ**	Max	Units
Input-Output Isolation Voltage	(I_{I-O} ≤ 1 µA, 1 min.)	V_{ISO}	7500			Vac(pk)
	(I_{I-O} ≤ 1 µA, 1 min.)		5300			Vac(rms)
Isolation Resistance	(V_{I-O} = 500 VDC)	R_{ISO}	10^{11}			Ω
Isolation Capacitance	(f = 1 MHz)	C_{ISO}		0.5		pf

Note
** Typical values at T_A = 25°C

Fig. 1 Output Current vs. Input Current

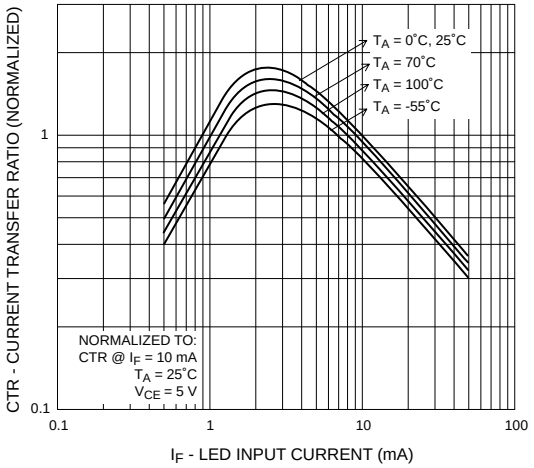

Fig. 2 Current Transfer Ratio vs. Ambient Temperature

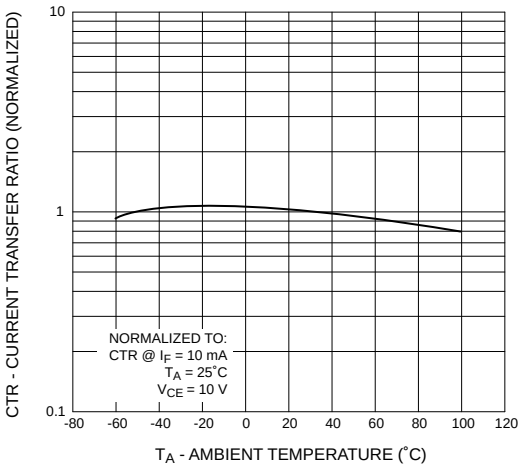

Fig. 3 Collector Current vs. Collector-Emitter Voltage

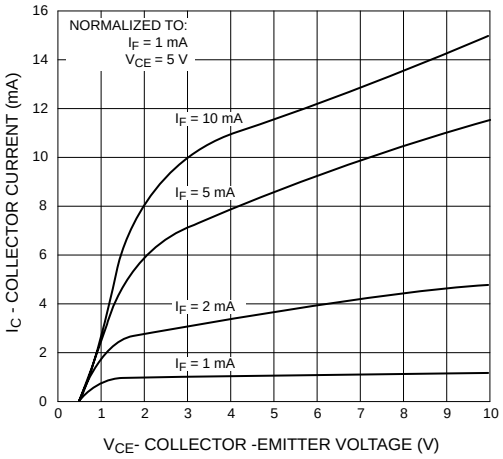

Fig. 4 Dark Current vs. Ambient Temperature

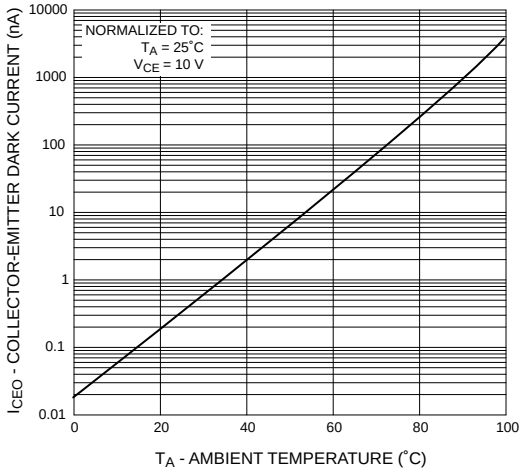

Fig. 5 Turn-On Time vs. Input Current

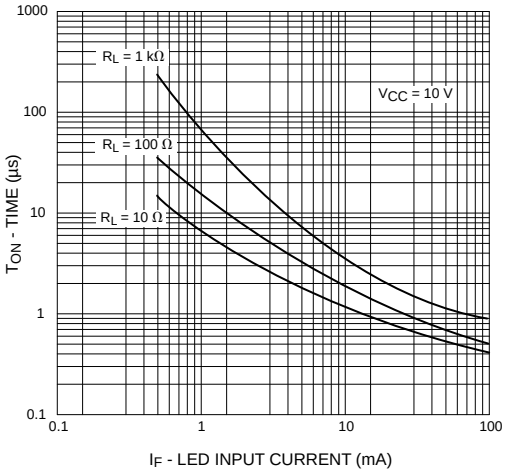

Fig. 6 Turn-Off Time vs. Input Current

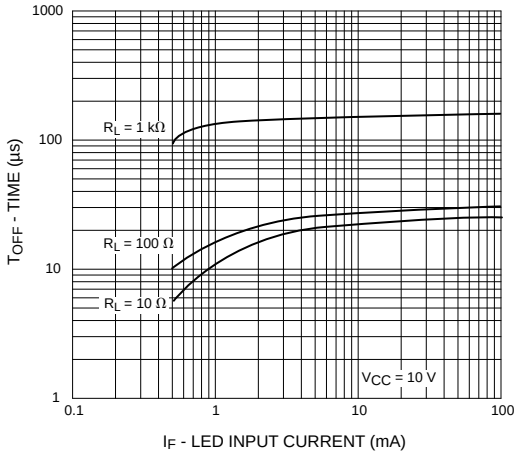

ORDERING INFORMATION

Option	Order Entry Identifier	Description
S	.S	Surface Mount Lead Bend
SD	.SD	Surface Mount; Tape and reel
W	.W	0.4” Lead Spacing
300	.300	VDE 0884
300W	.300W	VDE 0884, 0.4” Lead Spacing
3S	.3S	VDE 0884, Surface Mount
3SD	.3SD	VDE 0884, Surface Mount, Tape & Reel

QT Carrier Tape Specifications (“D” Taping Orientation)

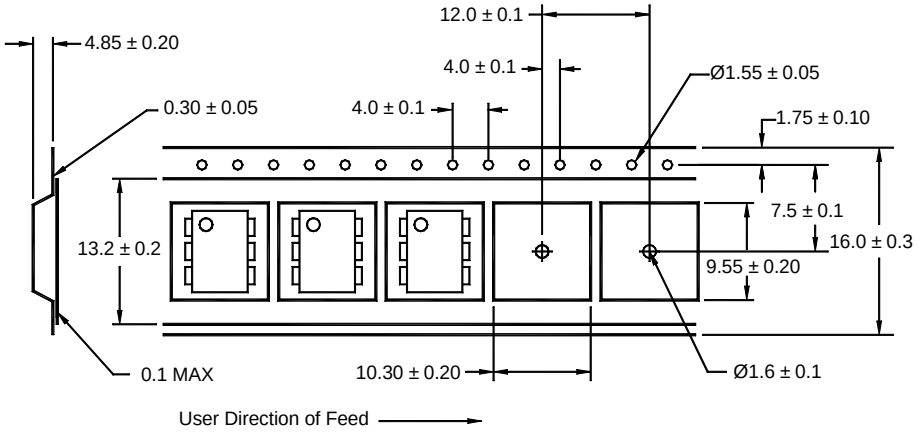

DISCLAIMER

FAIRCHILD SEMICONDUCTOR RESERVES THE RIGHT TO MAKE CHANGES WITHOUT FURTHER NOTICE TO ANY PRODUCTS HEREIN TO IMPROVE RELIABILITY, FUNCTION OR DESIGN. FAIRCHILD DOES NOT ASSUME ANY LIABILITY ARISING OUT OF THE APPLICATION OR USE OF ANY PRODUCT OR CIRCUIT DESCRIBED HEREIN; NEITHER DOES IT CONVEY ANY LICENSE UNDER ITS PATENT RIGHTS, NOR THE RIGHTS OF OTHERS.

LIFE SUPPORT POLICY

FAIRCHILD'S PRODUCTS ARE NOT AUTHORIZED FOR USE AS CRITICAL COMPONENTS IN LIFE SUPPORT DEVICES OR SYSTEMS WITHOUT THE EXPRESS WRITTEN APPROVAL OF THE PRESIDENT OF FAIRCHILD SEMICONDUCTOR CORPORATION. As used herein:

1. Life support devices or systems are devices or systems which, (a) are intended for surgical implant into the body,or (b) support or sustain life, and (c) whose failure to perform when properly used in accordance with instructions for use provided in labeling, can be reasonably expected to result in a significant injury of the user.
2. A critical component in any component of a life support device or system whose failure to perform can be reasonably expected to cause the failure of the life support device or system, or to affect its safety or effectiveness.

Looking for pricing, stock, or lifecycle information?

Click below to explore more details on WIN SOURCE:

- View MOC8021 on WIN SOURCE
- ON Semiconductor Information

Optimize Your Supply Chain with WIN SOURCE Solutions

- Global Sourcing Solution
- Obsolete Management
- Cost Control Management
- Shortage Management
- Alternative Solution
- Excess Inventory Management