THE DATASHEET OF

BGF104CE6328XTSA1

www.win-source.net 0086-755-83957316

Data Sheet, V2.0, November 2009

BGF104C

HSMMC Interface Filter and ESD Protection

RF & Protection Devices

Edition 2009-11-12

Published by
Infineon Technologies AG
81726 München, Germany

© Infineon Technologies AG 2009.
All Rights Reserved.

Legal Disclaimer

The information given in this document shall in no event be regarded as a guarantee of conditions or characteristics ("Beschaffenheitsgarantie"). With respect to any examples or hints given herein, any typical values stated herein and/or any information regarding the application of the device, Infineon Technologies hereby disclaims any and all warranties and liabilities of any kind, including without limitation warranties of non-infringement of intellectual property rights of any third party.

Information

For further information on technology, delivery terms and conditions and prices please contact your nearest Infineon Technologies Office (**www.infineon.com**).

Warnings

Due to technical requirements components may contain dangerous substances. For information on the types in question please contact your nearest Infineon Technologies Office.

Infineon Technologies Components may only be used in life-support devices or systems with the express written approval of Infineon Technologies, if a failure of such components can reasonably be expected to cause the failure of that life-support device or system, or to affect the safety or effectiveness of that device or system. Life support devices or systems are intended to be implanted in the human body, or to support and/or maintain and sustain and/or protect human life. If they fail, it is reasonable to assume that the health of the user or other persons may be endangered.

BGF104C

Revision History: 2009-11-12, V2.0

Previous Version: 2009-09-14, V1.0	
Page	**Subjects (major changes since last revision)**
4	3D-figure of package updated
5	**Figure 2** updated
6	Footprint (**Figure 3**) added
6	Tape specification (**Figure 4**) added
all	Target status removed

BGF104C

Features

- ESD protection and filter for High Speed Multi Media Card interface
- ESD protection according to IEC61000-4-2 for ±15 kV contact discharge on external IOs
- 16 pin green wafer level package with SnAgCu solder balls
- RoHS and WEEE compliant package
- 500 µm solder ball pitch
- 300 µm solder ball diameter

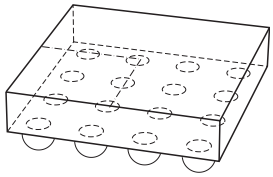

WLP-16-3-N

Description

BGF104C is an ESD protection and filter circuit for a high speed multi media card interface. External pins are protected against ESD pulses of ±15 kV contact discharge according to IEC61000-4-2. The wafer level package is a green leadfree package with a size of only 1.92 mm x 1.92 mm and a total height of 0.65 mm.

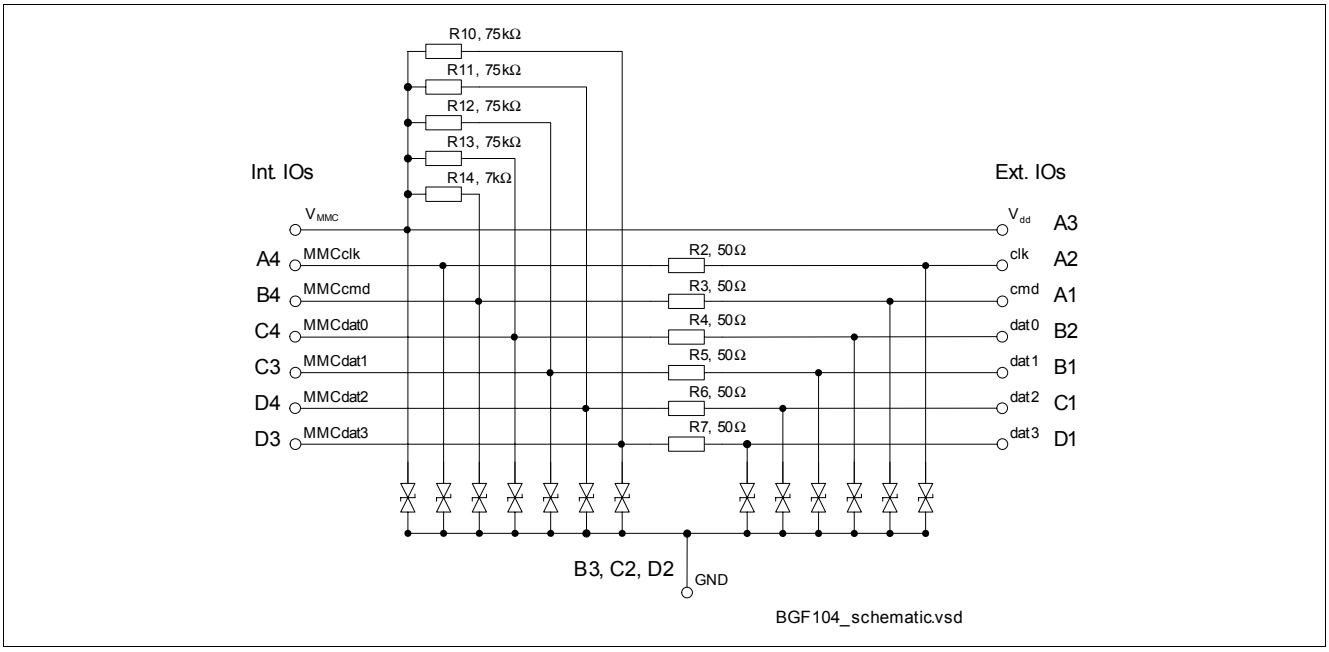

Figure 1 Schematic

Type	Package	Marking	Chip
BGF104C	WLP-16-3	4C	N0708

Table 1 Maximum Ratings

Parameter	Symbol	Values			Unit	Note / Test Condition
		Min.	Typ.	Max.		
Voltage at all pins to GND	V_P	0	–	14	V	–
Operating temperature range	T_{OP}	-40	–	+85	°C	–
Storage temperature range	T_{STG}	-65	–	+150	°C	–
Electrostatic Discharge According to IEC61000-4-2						
Contact discharge external pins to GND (A1, A2, A3, B1, B2, C1, D1)	V_{ESD}	-15	–	15	kV	–
Contact discharge internal pins to GND (A4, B4,C3, C4, D3, D4)	V_{ESD}	-2	–	2	kV	–

Table 2 Electrical Characteristics[1)]

Parameter	Symbol	Values			Unit	Note / Test Condition
		Min.	Typ.	Max.		
Resistors R_2 ... R_7	$R_{2...7}$	40	50	60	Ω	–
Resistors R_{10} ... R_{13}	$R_{10...13}$	52.5	75	97.5	kΩ	–
Resistor R_{14}	R_{14}	4.9	7	9.1	kΩ	–
Line capacitance, each line to GND[2)]	C_T	–	16	20	pF	V = 0 V
Reverse current of ESD protection diodes I_R = 3 V I_R = 14 V	I_R	–	 5 0.1	 100 10	 nA µA	–

1) at T_A = 25 °C
2) Without line coupling by Resistors R_7 - R_{11}

Package Outlines

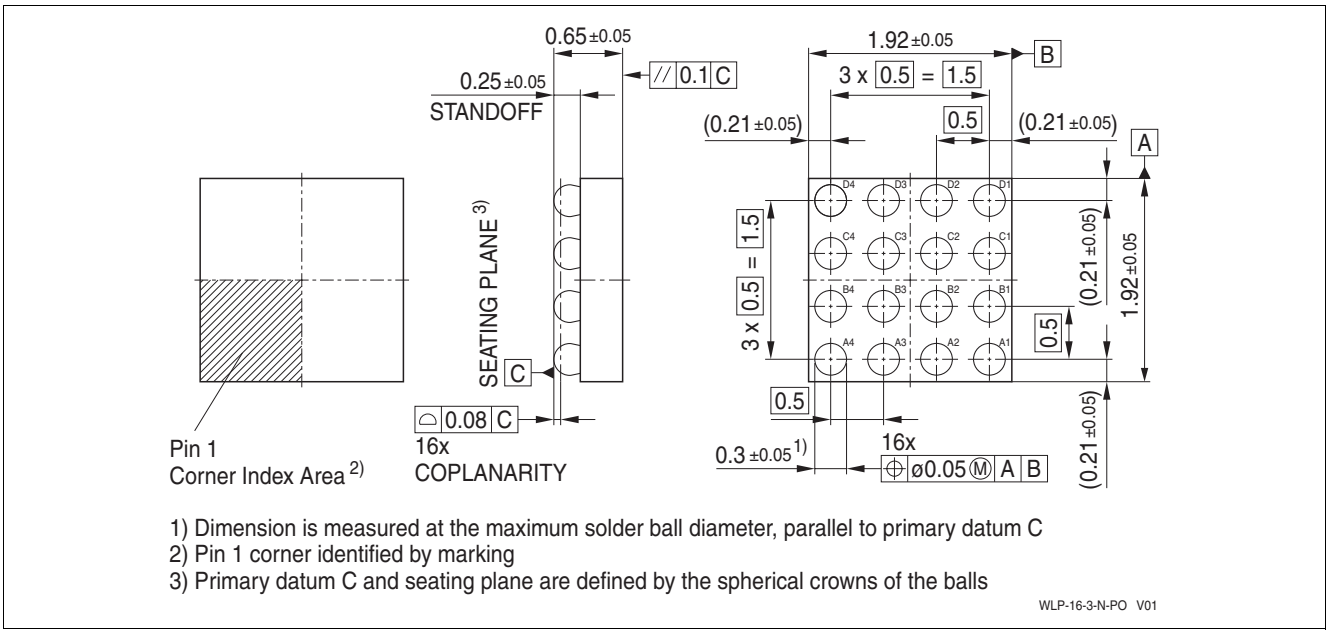

Figure 2 WLP-16-3 (dimensions in mm)

Footprint

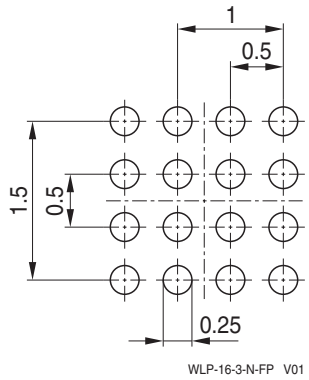

Figure 3 **Footprint for WLP-16-3** (dimensions in mm)

Tape and reel specification

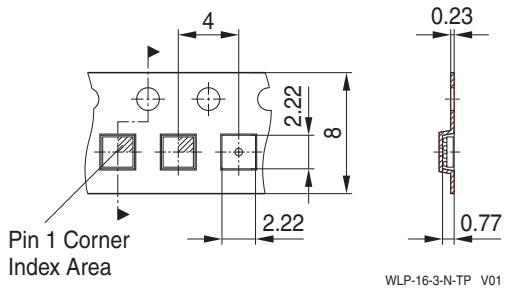

Figure 4 **Tape for WLP-16-3** (dimensions in mm)

You can find all of our packages, sorts of packing and others in our Infineon Internet Page “Products”: **http://www.infineon.com/products**

Looking for pricing, stock, or lifecycle information?

Click below to explore more details on WIN SOURCE:

- View BGF104CE6328XTSA1 on WIN SOURCE
- Infineon Technologies Information

Optimize Your Supply Chain with WIN SOURCE Solutions

- Global Sourcing Solution
- Obsolete Management
- Cost Control Management
- Shortage Management
- Alternative Solution
- Excess Inventory Management